CITY OF ALBUQUERQUE, NEW MEXICO

MUNICIPAL DEVELOPMENT DEPARTMENT

VICINITY MAP

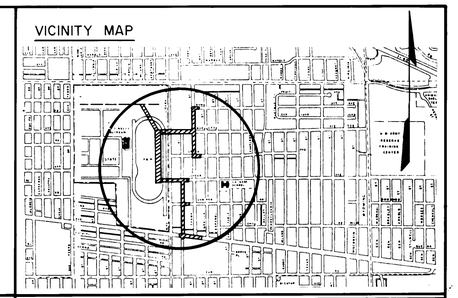

NOTES

ALL WORK DETAILED ON THESE PLANS TO BE PERFORMED UNDER CONTRACT SHALL, EXCEPT AS OTHERWISE STATED OR PROVIDED FOR HEREON, BE CONSTRUCTED IN ACCORDANCE WITH THE NEW MEXICO STANDARD SPECIFICATIONS FOR PUBLIC WORKS CONSTRUCTION - 1979 EDITION (REFFERED TO HEREIN AS THE STANDARD SPECIFICATIONS).

TWO (2) WORKING DAYS PRIOR TO ANY EXCAVATION, CONTRACTOR MUST CONCONTACT LINE LOCATING SERVICE, 765-1234, FOR LOCATION OF EXISTING UTILITIES.

PRIOR TO CONSTRUCTION, THE CONTRACTOR SHALL EXCAVATE AND VERIFY THE HORIZONTAL AND VERTICAL LOCATIONS OF ALL OBSTRUCTIONS. SHOULD A CONFLICT EXIST, THE CONTRACTOR SHALL NOTIFY THE ENGINEER OR SURVEYOR SO THAT THE CONFLICT CAN BE RESOLVED WITH MINIMUM AMOUNT OF DELAY.

FAIRGROUNDS STORM WATER RELIEF SYSTEM PHASE 1

INDEX

DESCRIPTION	SHEET NO.
TITLE SHEET	1
GENERAL NOTES & LEGEND	2
STORM DRAIN PLAN & PROFILE	3 - 17
FAIRGROUND CHANNEL PLAN	18 - 19
MISCELLANEOUS CHANNEL DETAILS	20 - 21
SPECIAL MANHOLE TYPE I	22
STORM SEWER MISCELLANEOUS DETAILS	23
CURB & GUTTER SANITARY SEWER WATER & PAVING PLAN & PROFILE	24 - 38
FAIRGROUND WALL & LANDSCAPING PLAN & PROFILE	39 - 40
LANDSCAPING MISCELLANEOUS DETAILS	41
FAIRGROUNDS IRRIGATION SYSTEM	42

APPROVAL OF AS BUILT DRAWINGS
ASST. CITY ENGINEER-FIELD
DATE 8-29-83

RECORD DRAWING
DATE 8-9-03

REV	SHEETS	CITY ENGR.	DATE	USER DEPT.	DATE	USER DEPT.	DATE

APPROVAL OF REVISIONS

ROBERT F. SYKES NEW MEXICO 4591 REGISTERED PROFESSIONAL ENGINEER

WILSON & COMPANY ENGINEERS & ARCHITECTS
ALBUQUERQUE, NEW MEXICO

APPROVED FOR CONSTRUCTION
Richard S. Miller 9/8/82

PROJECT No. 1543

SHEET 1 OF 42

26 1E43 0187

81-507

GENERAL NOTES

1. ALL WORK WITHIN THE FAIRGROUNDS PROPERTY SHALL BE COORDINATED WITH THE MANAGER OF THE NEW MEXICO STATE FAIR OR HIS DESIGNATED REPRESENTATIVE.
2. AT THE END OF EACH DAYS WORK, IT WILL BE NECESSARY TO SECURE ACCESS TO THE FAIRGROUND PROPERTY WITH TEMPORARY FENCING AT LEAST 6' HIGH.
3. THE NEW MEXICO STATE FAIR BOARD SHALL HAVE FIRST OPTION FOR ALL EXCESS DIRT WHICH HAS BEEN REMOVED FOR CONSTRUCTION OF FACILITIES ON THE FAIRGROUNDS. SUCH MATERIAL SHALL BE STOCKPILED AT LOCATIONS DESIGNATED BY THE MANAGER.
4. AT THE PRECONSTRUCTION CONFERENCE THE CONTRACTOR SHALL SUBMIT A PLAN FOR MAINTAINING WATER AND SANITARY SEWER SERVICE TO ALL RESIDENTIAL & COMMERCIAL USERS.
5. THE MAXIMUM LENGTH OF STREET THAT MAY BE CLOSED TO LOCAL ACCESS AT ONE TIME IS 200 FT. THE CONTRACTOR SHALL MAKE EVERY EFFORT TO MAINTAIN ACCESS TO PRIVATE PROPERTY.
6. CENTRAL AVE. & LOUISIANA BLVD. SHALL REMAIN OPEN TO TWO-WAY TRAFFIC AT ALL TIMES, TRAFFIC CONTROL PLANS SHALL BE APPROVED BY THE CITY TRAFFIC ENGINEER.
7. ALL RADII OF CURB RETURNS ARE SHOWN TO FACE OF CURB.
8. UNLESS OTHERWISE SHOWN, ALL DIMENSIONS ARE TO FACE OF CURB.
9. ALL FINISH GRADES AND PROFILES SHOWN ARE TOP OF CURB GRADES, UNLESS OTHERWISE NOTED. MATCH FLOWLINES OF GUTTERS WHEN CONNECTING NEW CURB AND GUTTER TO EXISTING.
10. ALL UTILITY POLES ARE TO BE RELOCATED BY OTHERS.
11. CURB AND GUTTER SHOWN AS EXISTING AND NOT TO BE REMOVED UNDER THIS CONTRACT WHICH IS DAMAGED OR DISPLACED BY THE CONTRACTOR SHALL BE REMOVED AND REPLACED BY THE CONTRACTOR AT HIS EXPENSE.
12. WHEN ABUTTING NEW PAVEMENT TO EXISTING, CUT BACK EXISTING PAVEMENT TO A STRAIGHT LINE AS REQUIRED TO REMOVE ANY BROKEN OR CRACKED PAVEMENT AND MATCH NEW TO EXISTING.
13. WHEN REMOVAL OF EXISTING CURB AND GUTTER OR SIDEWALK IS REQUIRED, REMOVE BACK TO NEAREST JOINT.
14. ALL GAS VALVE BOXES, GAS MANHOLES, ELECTRICAL MANHOLES, AND TELEPHONE MANHOLES WILL BE ADJUSTED TO GRADE BY OTHERS.
15. 48 HOURS PRIOR TO ANY EXCAVATION, CONTRACTOR MUST CONTACT LINE & CABLE LOCATING SERVICE, 765-1234, FOR LOCATION OF EXISTING UTILITIES.
16. IT WILL BE THE CONTRACTOR'S RESPONSIBILITY TO PROTECT AND MAINTAIN IN SERVICE ALL EXISTING UTILITIES.
17. EXACT LOCATION OF DRIVEPADS AND WHEELCHAIR RAMPS WILL BE DETERMINED IN THE FIELD BY THE PROJECT ENGINEER. LOCATIONS SHOWN ON PLAN AND PROFILE SHEETS ARE APPROXIMATE.
18. THE CITY OF ALBUQUERQUE STANDARD DETAILS ARE INCLUDED IN PART AT THE BACK OF THE SPECIFICATIONS.
19. ALL WATER VALVE BOXES AND SEWER MANHOLES IN THE CONSTRUCTION AREA ARE TO BE ADJUSTED TO FINISH GRADE UNDER THIS CONTRACT.
20. SUBGRADE PREPARATION UNDER CURB AND GUTTER, DRIVEPADS AND SIDEWALK SHALL BE CONSIDERED INCIDENTAL TO THE CONSTRUCTION OF SUCH AND SHALL BE INCLUDED IN THE BID PRICE FOR SUCH ITEMS.
21. A DISPOSAL SITE FOR ALL EXCESS EXCAVATION MATERIAL, ASPHALTIC PAVING, CONCRETE PAVING, HOUSE FOUNDATIONS AND FLOORS, EXISTING DROP INLETS, ETC. SHALL BE OBTAINED BY THE CONTRACTOR IN COMPLIANCE WITH APPLICABLE REGULATIONS. ALL COSTS INCURRED IN OBTAINING A DISPOSAL SITE AND HAUL THERETO SHALL BE CONSIDERED INCIDENTAL TO CONSTRUCTION AND NO DIRECT PAYMENT WILL BE MADE THEREFOR.
22. THE CONTRACTOR WILL BE REQUIRED TO CONFINE HIS WORK WITHIN THE CONSTRUCTION LIMITS AND/OR R.O.W. TO PRESERVE EXISTING VEGETATION AND PRIVATE PROPERTY. OVERNITE PARKING OF CONSTRUCTION EQUIPMENT SHALL NOT OBSTRUCT DRIVEWAY OPENINGS OR DESIGNATED TRAFFIC LANES.
23. FIFTY (50) TON ROLLER OPERATION SHALL NOT BE USED IN THIS PROJECT WHERE UNDERGROUND UTILITIES ARE PRESENT. THE REQUIRED COMPACTION AT THESE LOCATIONS SHALL BE EFFECTED BY MEANS OF OTHER TYPES OF ROLLING AVAILABLE.
24. ALL EXCAVATIONS FOR STORM DRAINS, AND OTHER EXCAVATIONS AS NECESSARY SHALL BE GOVERNED BY THE CONSTRUCTION SAFETY AND HEALTH STANDARDS (TITLE 29, CRF, PART 1926 AND PART 1910 AS APPLICABLE TO CONSTRUCTION WORK - PUBLISHED IN THE FEDERAL REGISTER ON FEBRUARY 9, 1979.)
25. ALL EXISTING REGULATORY SIGNS AND SIGNALS THAT NEED TO BE REMOVED, RELOCATED OR RE-INSTALLED SHALL BE DONE BY THE CITY OF ALBUQUERQUE TRAFFIC ENGINEERING DIVISION. THE CONTRACTOR SHALL NOTIFY THE TRAFFIC ENGINEERING DIVISION 3 WORKING DAYS IN ADVANCE OF ANY REQUIRED WORK.
26. PERMANENT SIGNING AND ALL STRIPING BY CITY FORCES. CONSTRUCTION SIGNING AND STRIPING BY CONTRACTOR. ALL COSTS INCURRED FOR CONSTRUCTION SIGNING AND STRIPING SHALL BE CONSIDERED INCIDENTAL TO CONSTRUCTION AND NO DIRECT PAYMENT WILL BE MADE THEREFOR, UNLESS OTHERWISE PROVIDED.
27. FIRE ALARM CABLES ARE TO BE ADJUSTED BY THE FIRE DEPARTMENT PERSONNEL. FOR INFORMATION CALL 243-6604.
28. EXISTING MEDIAN CURB & GUTTER AND STANDARD CURB & GUTTER THAT IS OUT OF ALIGNMENT OR DISPLACED VERTICALLY OR IS BADLY BROKEN OR DETERIORATED WILL BE REPLACED AS DIRECTED BY THE ENGINEER, AND WILL BE PAID FOR AT CONTRACT UNIT PRICES.
29. THE CONTRACTOR SHALL NOTIFY WATER SYSTEMS DIVISION AT LEAST 2 WORKING DAYS IN ADVANCE OF WHEN FIRE HYDRANTS WILL BE TAKEN OUT OF SERVICE AND RETURNED TO SERVICE.
30. ALL TRAFFIC CONTROL DEVICES SHALL COMPLY WITH THE 1978 EDITION OF "MANUAL FOR UNIFORM TRAFFIC CONTROL DEVICES".
31. ALL TRAFFIC CONTROL SIGNS MUST BE INSTALLED BEFORE CONSTRUCTION BEGINS FOR EACH PHASE OF THE WORK AS DIRECTED BY THE ENGINEER. ALL SIGN LOCATIONS WILL BE SELECTED IN THE FIELD AND APPROVED BY THE ENGINEER. SIGN HEIGHTS SHALL BE 7 FT. ABOVE SIDEWALK LEVEL. PORTABLE SIGNS MAY BE USED.
32. ALL DRUMS USED FOR TRAFFIC CONTROL MAY BE FILLED WITH SAND OR WATER BALLAST LIMITED TO 100 LBS. MAXIMUM PER DRUM.
33. THE CONTRACTOR SHALL PROVIDE AND MAINTAIN A SAFE AND ADEQUATE MEANS OF CHANNELING PEDESTRIAN TRAFFIC AROUND ALL WORK AREAS THROUGHOUT THE CONSTRUCTION PERIOD.
34. THE NEW MEXICO STANDARD SPECIFICATIONS FOR PUBLIC WORKS CONSTRUCTION, 1979 EDITION WILL GOVERN THIS PROJECT EXCEPT AS REVISED, AMENDED OR SUPPLEMENTED BY THE SUPPLEMENTAL GENERAL CONDITIONS, SPECIAL PROVISIONS AND THE TECHNICAL SPECIFICATIONS.
35. THE CONTRACTOR SHALL MAINTAIN ACCESS TO ALL PROPERTY WHEN SUCH ACCESS DOES NOT JEOPARDIZE THE QUALITY OF THE WORK OR THE SAFETY OF THE WORKERS & GENERAL PUBLIC.
36. THE CONCRETE PAVEMENT FOR WHEEL CHAIR RAMPS IS INCLUDED IN THE BID ITEM "4 INCH CONCRETE SIDEWALK INCLUDING 6 INCH SUBGRADE PREPARATION".
37. ALL ADVANCE WARNING SIGNS AND ALL BARRICADES SHALL BE EQUIPPED WITH FLASHING WARNING LIGHTS, TYPE A, EXCEPT ALL CHANNELIZING BARRICADES SHALL HAVE STEADY BURNING WARNING LIGHTS, TYPE C.
38. ALL TRAFFIC CONTROL DEVICES REQUIRED FOR DRIVEWAY CLOSURES, UTILITY CONSTRUCTION, OR FOR OTHER REASONS SHALL BE FURNISHED BY THE CONTRACTOR AND SHALL BE INCIDENTAL TO OTHER ITEMS OF WORK AND NO SEPARATE PAYMENT WILL BE MADE.

LEGEND

EXISTING UTILITIES

—G—	GAS
—W—	WATER
—S—	SANITARY SEWER
—SD—	STORM DRAIN
MH	MANHOLE
WV	WATER VALVE
	UTILITY POLE
LP	LIGHT POLE
FH	FIRE HYDRANT
CB	CATCH BASIN
TL	TRAFFIC SIGNAL
—UT—	BURIED TELEPHONE

PLAN

(R) REMOVE

(C) CONSTRUCT

(I) INSTALL

AS BUILT INFORMATION

CONTRACTOR

WORK STAKED BY — DATE

INSPECTOR'S ACCEPTANCE BY — DATE

FIELD VERIFICATION BY — DATE

DRAWINGS CORRECTED BY — DATE

MICRO-FILM INFORMATION

RECORDED BY — DATE

NO.

BENCH MARKS

REFERENCES

MAP NO. A-16 & A-19

NO.	DATE	REMARKS	BY

REVISIONS

DESIGN

DESIGNED BY: WILSON & CO., ENG. DATE:

DRAWN BY: DATE:

CHECKED BY: DATE:

RECORD DRAWING

DATE 8-9-83

ROBERT F. STAGG NEW MEXICO 4591 REGISTERED PROFESSIONAL ENGINEER

26 1543 0283

CITY OF ALBUQUERQUE

MUNICIPAL DEVELOPMENT DEPARTMENT

FAIRGROUNDS STORM WATER RELIEF SYSTEM PHASE I

GENERAL NOTES & LEGEND

APPROVALS	ENGINEER	DATE	APPROVALS	ENGINEER	DATE
City Engineer			Traffic		
Liquid Waste			Water		
A.C.E.- Design			1543	SHEET 2 OF 42	
A.C.E.-Hydrology					

81-507

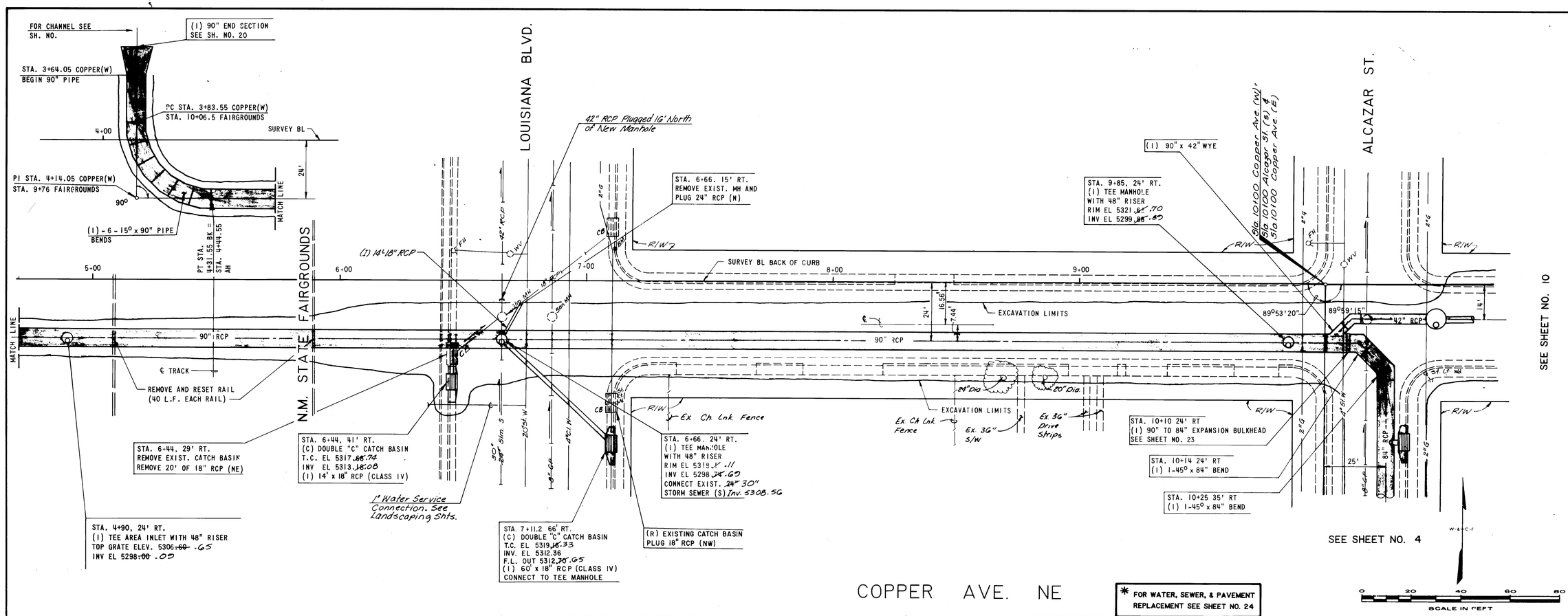

AS BUILT INFORMATION

CONTRACTOR	DATE
WORK STAKED BY	
INSPECTOR'S ACCEPTANCE BY	DATE
VERIFIED FIELD DIMENSIONS BY	DATE
DRAWINGS CORRECTED BY	DATE
MICRO-FILM INFORMATION RECORDED BY	DATE
NO.	

BENCH MARKS

9-K19 AT THE INTERSECTION OF LOUISIANA BLVD. & COPPER AVE. N.E.
A SQUARE ◻ CHISELED ON TOP OF CONCRETE CURB AT THE N.N.E. RETURN ELEV. 5318.738

REFERENCES
MAP NO. K-18 & K-19

ROBERT E. SYKES MEMBER 4591 REGISTERED PROFESSIONAL ENGINEER

NO.	DATE	REMARKS	BY
		REVISIONS	

DESIGN
DESIGNED BY: WILSON & CO., ENG. DATE: 5/82
DRAWN BY: RAL DATE: 6/82
CHECKED BY: MLB DATE: 6/82

CITY OF ALBUQUERQUE
MUNICIPAL DEVELOPMENT DEPARTMENT

FAIRGROUNDS STORM WATER RELIEF SYSTEM PHASE I

COPPER AVE. (WEST)

APPROVALS	ENGINEER	DATE	APPROVALS	ENGINEER	DATE
City Engineer			Traffic		
Liquid Waste			Water		
A.C.E. - Design					
A.C.E. - Hydrology					

1543

SHEET 3 OF 42

81-507

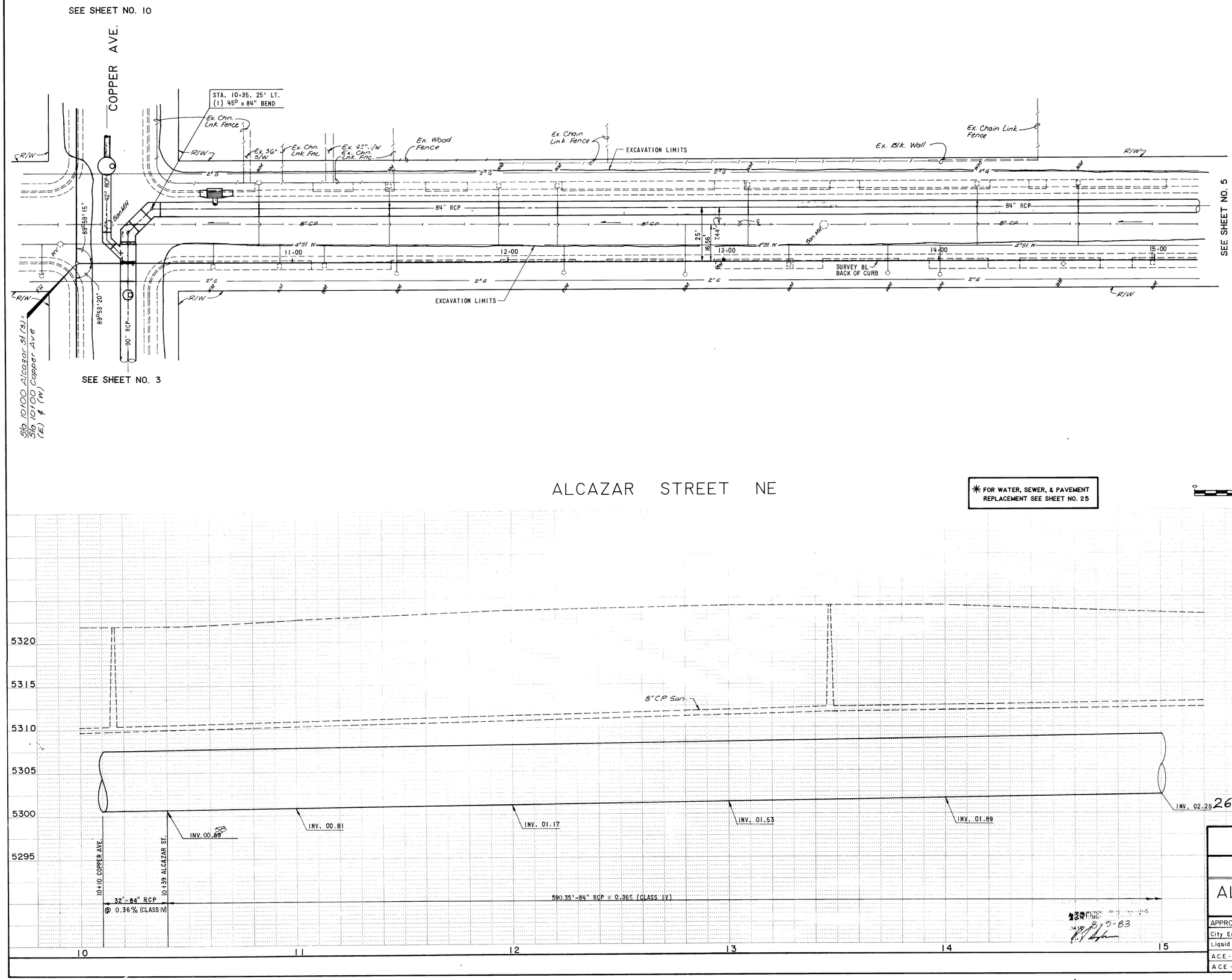

AS BUILT INFORMATION

CONTRACTOR	DATE
WORK STAKED BY	
INSPECTOR'S ACCEPTANCE BY	DATE
VERIFIED FIELD CONDITIONS BY	DATE
DRAWINGS CORRECTED BY	DATE

MICRO-FILM INFORMATION

RECORDED BY	DATE
NO.	

BENCH MARKS

SQUARE □ CHISELED ON TOP OF CONCRETE CURB AT STA. 13+00
BASE LINE (RT.) ELEV. 5324.06

REFERENCES

MAP NO. K-19

ROBERT F. SYKES REGISTERED PROFESSIONAL ENGINEER 4591

NO.	DATE	REMARKS	BY
		REVISIONS	

DESIGN

DESIGNED BY: WILSON & CO., ENG. DATE: 6/82
DRAWN BY: RAL DATE: 6/82
CHECKED BY: MLB DATE: 6/82

CITY OF ALBUQUERQUE
MUNICIPAL DEVELOPMENT DEPARTMENT

FAIRGROUNDS STORM WATER RELIEF SYSTEM PHASE I

ALCAZAR STREET (SOUTH)

APPROVALS	ENGINEER	DATE	APPROVALS	ENGINEER	DATE
City Engineer			Traffic		
Liquid Waste			Water		
A.C.E. - Design					
A.C.E. - Hydrology					

1543

SHEET 4 OF 42

81-507

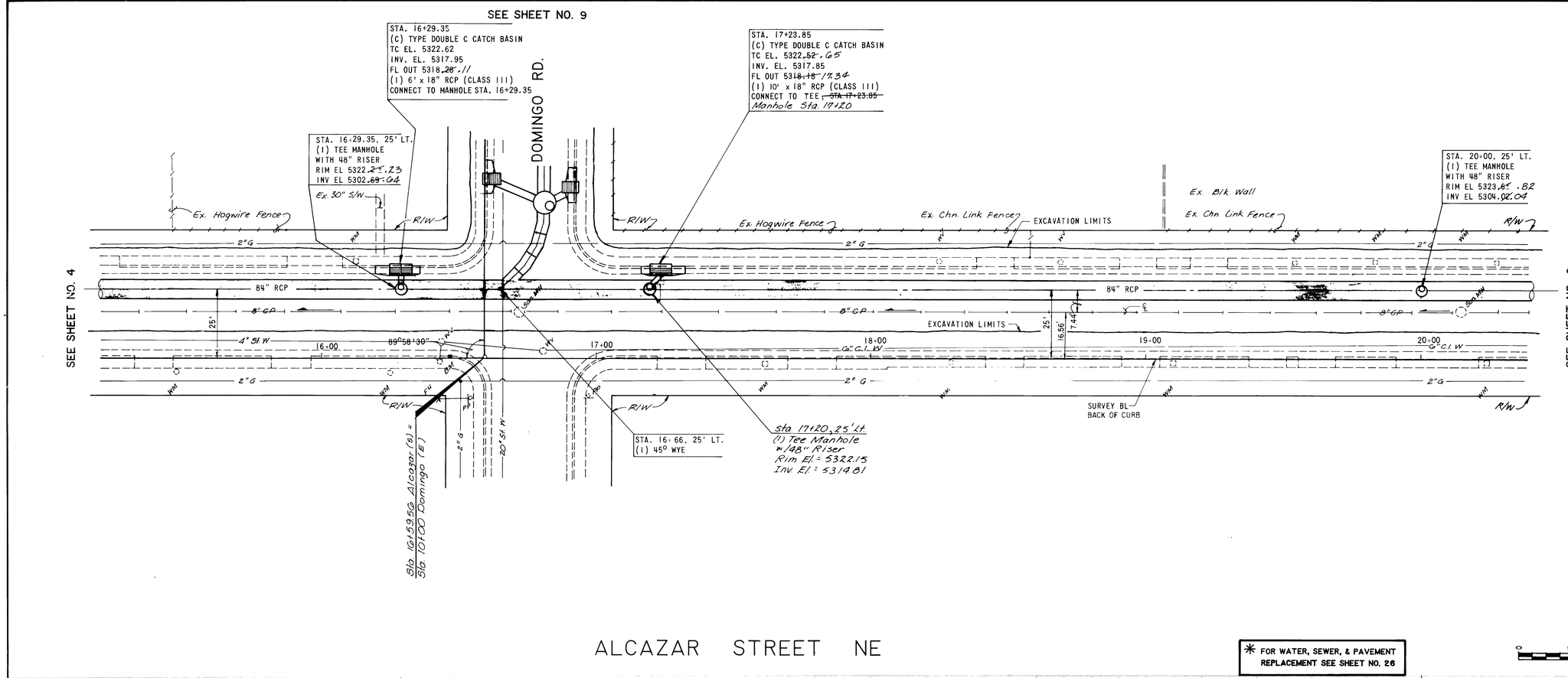

ALCAZAR STREET NE

* FOR WATER, SEWER, & PAVEMENT REPLACEMENT SEE SHEET NO. 26

SCALE IN FEET 0 20 40 60 80

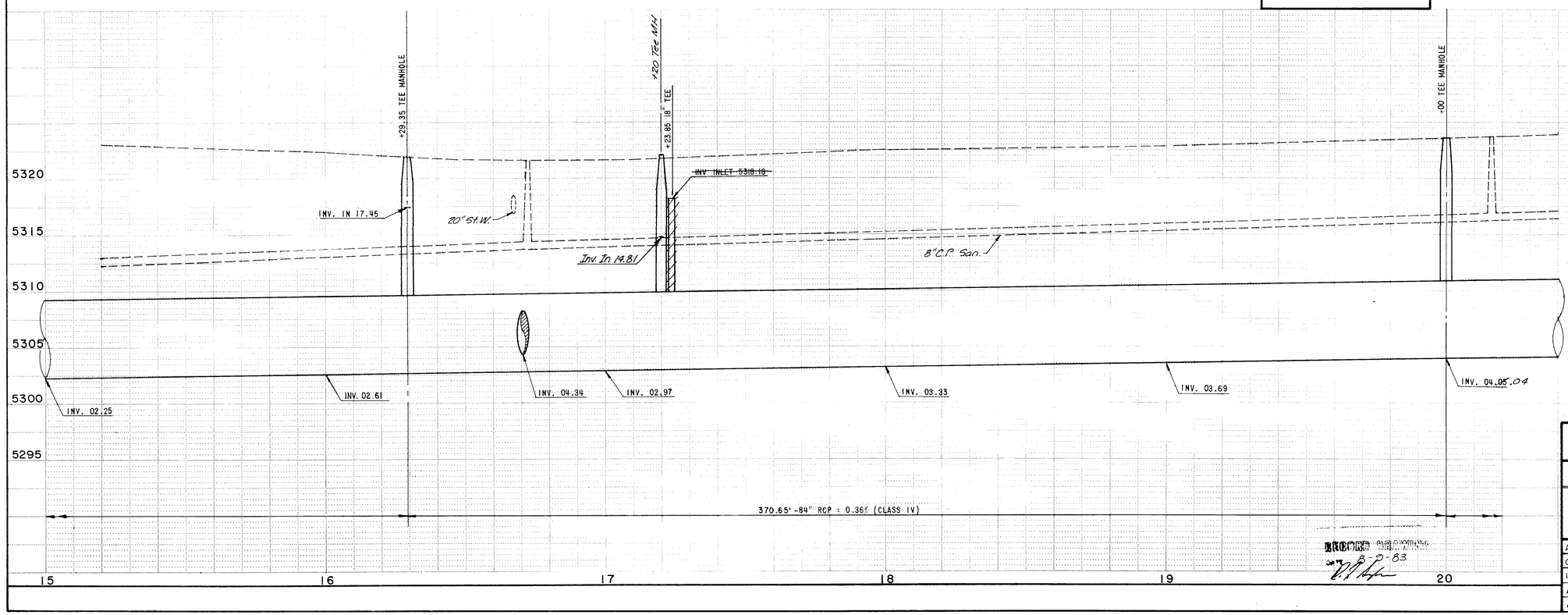

26 1543 0583

RECORD DRAWING
8-2-83

AS BUILT INFORMATION
CONTRACTOR
WORK STAKED BY DATE
INSPECTOR'S ACCEPTANCE BY DATE
FIELD VERIFICATIONS BY DATE
DRAWINGS CORRECTED BY DATE
MICRO-FILM INFORMATION
RECORDED BY DATE
NO.

BENCH MARKS
SQUARE □ CHISELED ON TOP OF CONCRETE CURB AT N.W. RETURN OF ALCAZAR ST. & DOMINGO RD. ELEV. 5321.92

REFERENCES
MAP NO. K-19

ROBERT F. SYKES NEW MEXICO 459 REGISTERED PROFESSIONAL ENGINEER

NO.	DATE	REMARKS	BY
		REVISIONS	

DESIGN
DESIGNED BY: WILSON & CO., ENG. DATE 6/82
DRAWN BY: RAL DATE 6/82
CHECKED BY: MLB DATE 6/82

CITY OF ALBUQUERQUE
MUNICIPAL DEVELOPMENT DEPARTMENT

FAIRGROUNDS STORM WATER RELIEF SYSTEM PHASE I

ALCAZAR STREET (SOUTH)

APPROVALS	ENGINEER	DATE	APPROVALS	ENGINEER	DATE
City Engineer			Traffic		
Liquid Waste			Water		
A.C.E. - Design			1543	SHEET 5 OF 42	
A.C.E. - Hydrology					

81-507

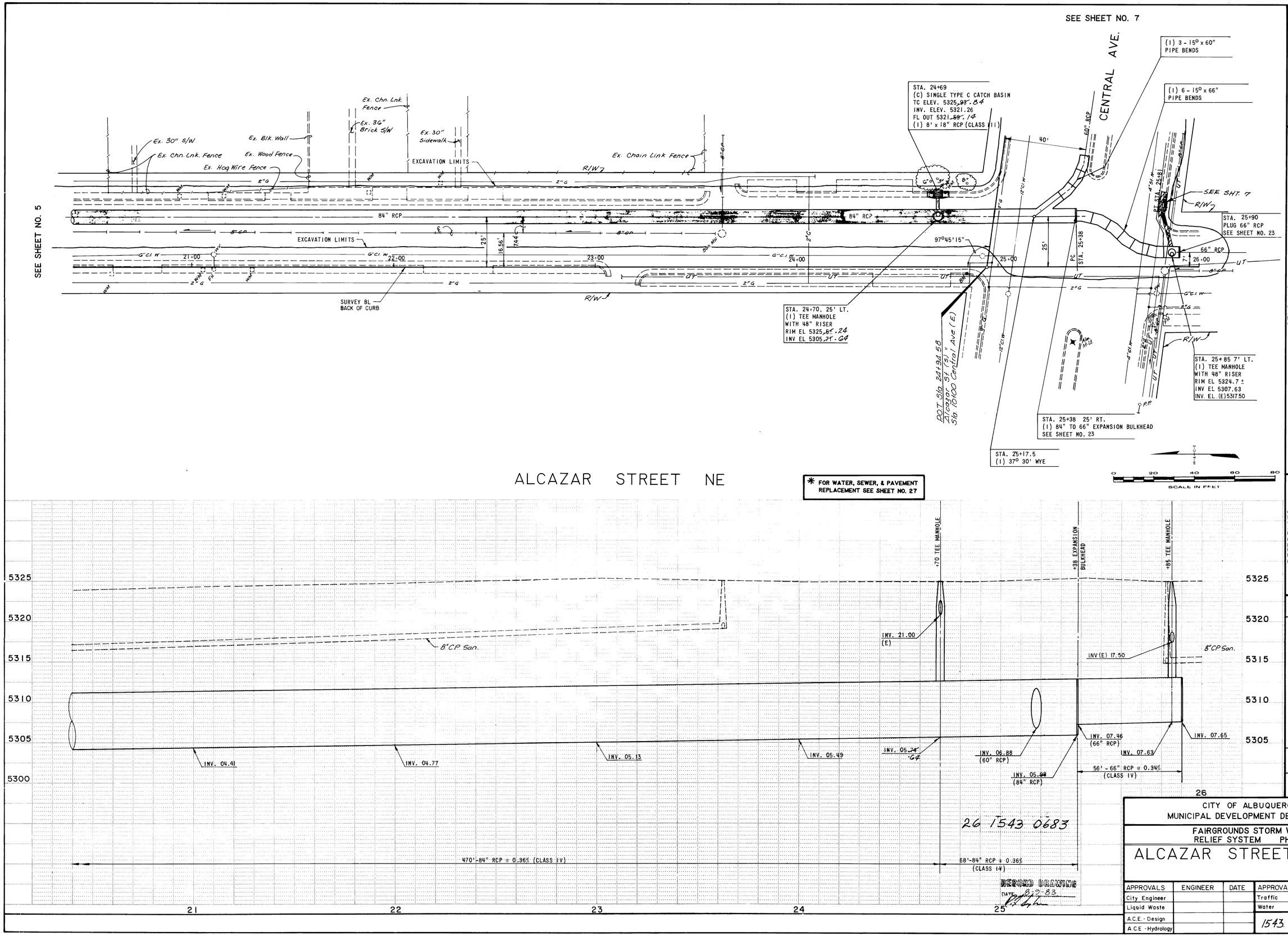

AS BUILT INFORMATION

CONTRACTOR
WORK STAKED BY — DATE
INSPECTED BY — DATE
ACCEPTANCE BY — DATE
VERIFIED BY FIELD — DATE
DRAWINGS CORRECTED BY — DATE

MICRO-FILM INFORMATION
RECORDED BY — DATE
NO.

BENCH MARKS

SQUARE ☐ CHISELED ON TOP OF CONCRETE CURB AT N.W. RETURN OF ALCAZAR ST. & CENTRAL AVE. ELEV. 5324.87

REFERENCES
MAP NO. K-19

ROBERT F. SYKES
NEW MEXICO
4591
REGISTERED PROFESSIONAL ENGINEER

NO.	DATE	REMARKS	BY

REVISIONS

DESIGN

DESIGNED BY: WILSON & CO., ENG. DATE: 6/82
DRAWN BY: RAL DATE: 6/82
CHECKED BY: MLB DATE: 6/82

CITY OF ALBUQUERQUE
MUNICIPAL DEVELOPMENT DEPARTMENT

FAIRGROUNDS STORM WATER RELIEF SYSTEM PHASE I

ALCAZAR STREET (SOUTH)

APPROVALS	ENGINEER	DATE	APPROVALS	ENGINEER	DATE
City Engineer			Traffic		
Liquid Waste			Water		
A.C.E. - Design			1543	SHEET 6 OF 42	
A.C.E. - Hydrology					

81-507

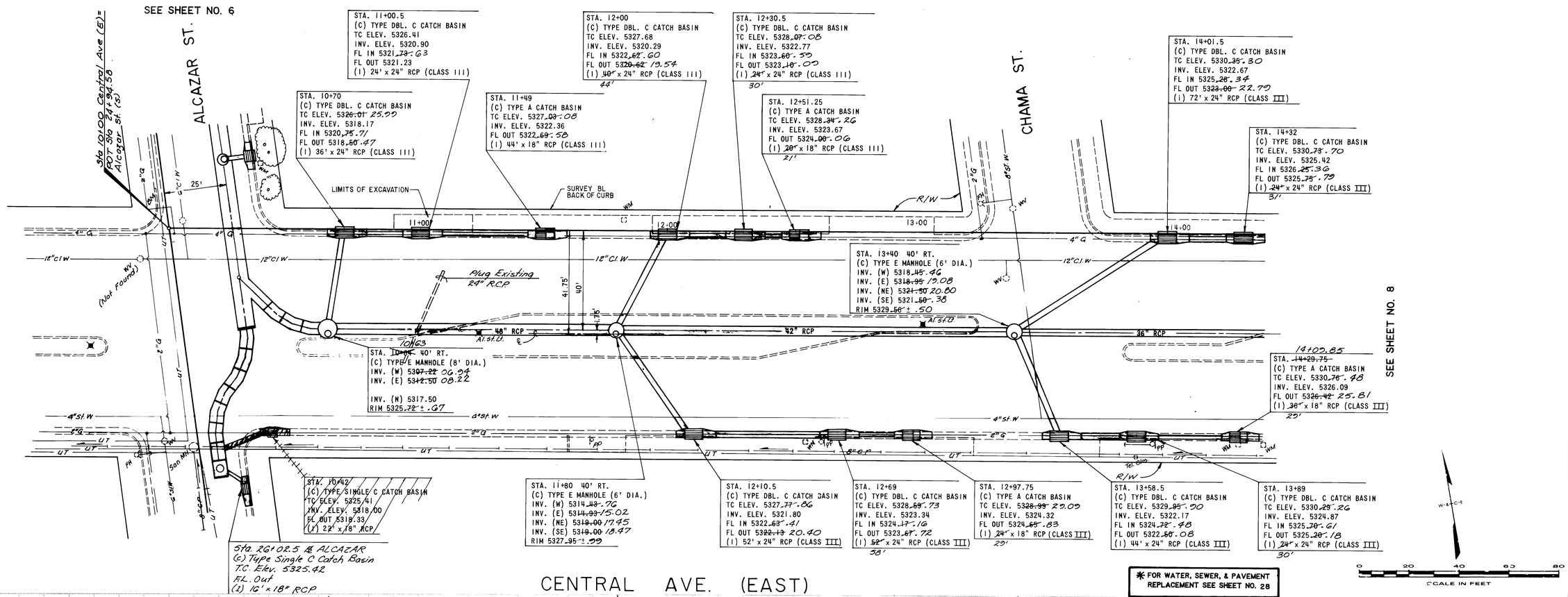

AS BUILT INFORMATION

CONTRACTOR		DATE
WORK STAKED BY		
INSPECTOR'S ACCEPTANCE BY		DATE
FIELD VERIFICATION BY		DATE
DRAWINGS CORRECTED BY		DATE

MICRO-FILM INFORMATION

RECORDED BY	DATE
NO.	

BENCH MARKS

SQUARE □ CHISELED ON TOP OF CONCRETE CURB AT N.W. RETURN OF CENTRAL AVE. & ALCAZAR ST. ELEV. 5324.87

REFERENCES

MAP NO. K-19

ROBERT F. SYKES NEW MEXICO (4559) REGISTERED PROFESSIONAL ENGINEER

NO.	DATE	REMARKS	BY

REVISIONS

DESIGN

DESIGNED BY: WILSON & CO., ENG. DATE: 6/82
DRAWN BY: RAL DATE: 6/82
CHECKED BY: MLB DATE: 6/82

CITY OF ALBUQUERQUE
MUNICIPAL DEVELOPMENT DEPARTMENT

FAIRGROUNDS STORM WATER RELIEF SYSTEM PHASE I

CENTRAL AVE. (EAST)

APPROVALS	ENGINEER	DATE	APPROVALS	ENGINEER	DATE
City Engineer			Traffic		
Liquid Waste			Water		
A.C.E. - Design			1543	SHEET 7 OF 42	
A.C.E. - Hydrology					

81-507

STA. 14+60.75
(C) TYPE A CATCH BASIN
TC ELEV. 5331 ~~.07~~ .00
INV. ELEV. 5326.40
FL OUT 5326 ~~.73~~ .76
(1) ~~24"~~ x 18" RCP (CLASS III)
29'

STA. 15+30.5
(C) TYPE DBL. C CATCH BASIN
TC ELEV. 5331.92
INV. ELEV. 5326.62
FL IN 5327 ~~.45~~ .42
FL OUT 5326 ~~.95~~ .98
(1) ~~24"~~ x 24" RCP (CLASS III)
30'

STA. 15+80 45' RT.
(C) TYPE E MANHOLE (4' DIA.)
INV. (W) 532~~3.95~~ 23.99
INV. (SE) 532~~5.00~~ 24.14
RIM ELEV. 5332 ~~.80~~ .58

STA. 14+80 40' RT.
(C) TYPE E MANHOLE (6' DIA.)
INV. (W) 5320 ~~.95~~ .82
INV. (E) 5321 ~~.95~~ .67
INV. (NE) 532~~3.00~~ 22.67
INV. (SE) 532~~3.00~~ 22.05
RIM ELEV. 532~~2.10~~ 31.36

STA. 15+00
(C) TYPE DBL. C CATCH BASIN
TC ELEV. 5331 ~~.55~~ .54
INV. ELEV. 5324.17
FL IN 5326 ~~.47~~ .41
FL OUT 532~~4.50~~ 23.84
(1) 44' x 24" RCP (CLASS III)

STA. 15+59.25
(C) TYPE A CATCH BASIN
TC ELEV. 5332 ~~.27~~ .22
INV. ELEV. 5327.60
FL OUT 5327.93
(1) ~~24"~~ x 18" RCP (CLASS III)
29'

MESILLA ST.

LIMITS OF EXCAVATION

15+00 16+00 17+00 18+00 19+00

SURVEY BL

R/W

12"CI W 12"CI W 12"CI W

40.00' 41.75' 1.75'

SEE SHEET NO. 7

24" RCP

Al. St. Lt.

4"G 4"G

4"St. W 4"St. W 5"St. W 5"St. W

San MH (Not Found) Telephone MH

San MH (Not Found)

LIMITS OF EXCAVATION

STA. 15+04.5
(C) TYPE DBL. C CATCH BASIN
TC ELEV. 5331 ~~.48~~ .55
INV. ELEV. 5324.17
FL IN 5326 ~~.35~~ .27
FL OUT 532~~4.50~~ 23.98
(1) 44' x 24" RCP (CLASS III)

STA. 15+35
(C) TYPE DBL. C CATCH BASIN
TC ELEV. 5331 ~~.82~~ .83
INV. ELEV. 5326.50
FL IN 5327 ~~.33~~ .19
FL OUT 5326 ~~.83~~ .76
(1) ~~24"~~ x 24" RCP (CLASS III)
30'

STA. 15+63.75
(C) TYPE A CATCH BASIN
TC ELEV. 5332 ~~.15~~ .14
INV. ELEV. 532~~7.48~~ 28.08
FL OUT 5327.81
(1) ~~24"~~ x 18" RCP (CLASS III)
29'

STA. 16+07.5
(C) TYPE DBL. C CATCH BASIN
TC ELEV. 5332.66
INV. ELEV. 5325.67
FL IN 5327 ~~.41~~ .30
FL OUT 532~~6.00~~ 24.68
(1) 48' x 24" RCP (CLASS III)

STA. 16+38
(C) TYPE DBL. C CATCH BASIN
TC ELEV. 5333 ~~.08~~ .04
INV. ELEV. 5327.56
FL IN 5328 ~~.39~~ .30
FL OUT 5327 ~~.89~~ .79
(1) ~~24"~~ x 24" RCP (CLASS III)
30.5'

STA. 17+10
(C) TYPE A CATCH BASIN
TC ELEV. 5334 ~~.08~~ .06
INV. ELEV. 5329.42
FL OUT 532~~9.75~~ 30.22
(1) ~~58"~~ x 18" RCP (CLASS III)
72'

CENTRAL AVE. (EAST)

* FOR WATER, SEWER, & PAVEMENT REPLACEMENT SEE SHEET NO. 29

W-E-N-E

0 20 40 60 80
SCALE IN FEET

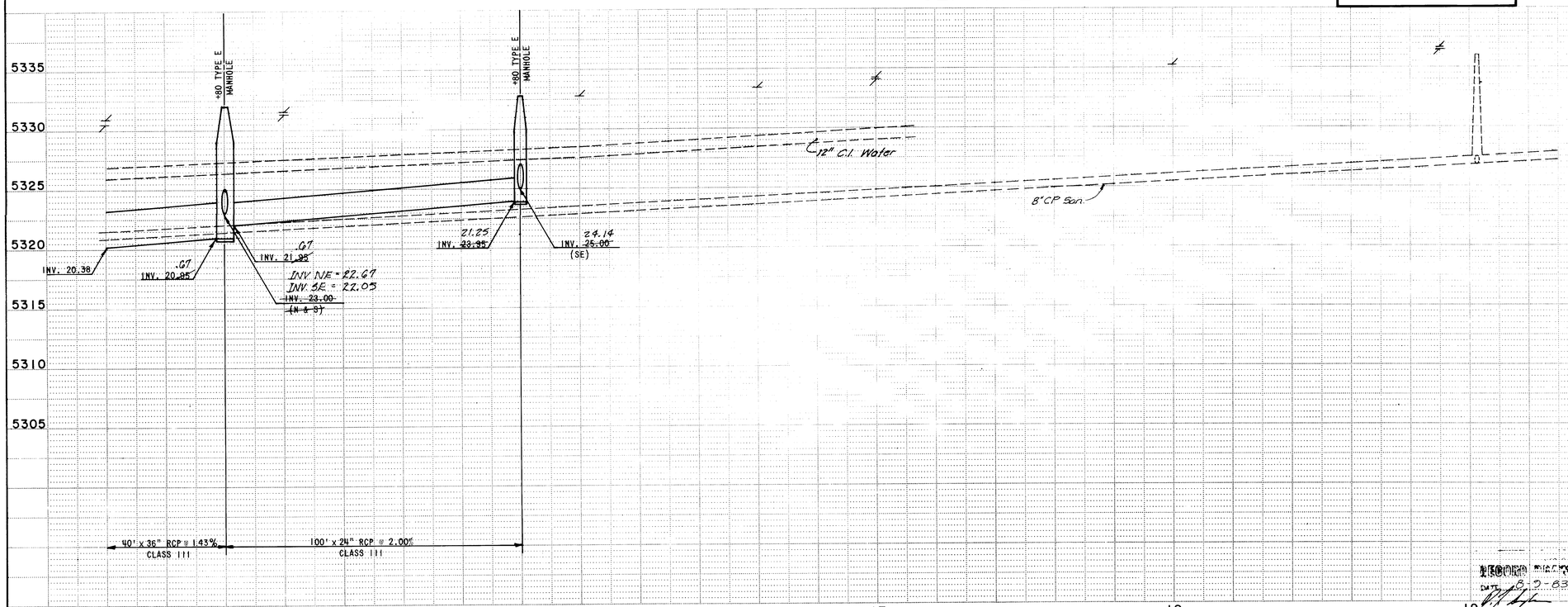

26 1543 0883

RECORD DRAWINGS
DATE 8-2-83

AS BUILT INFORMATION
CONTRACTOR
WORK STAKED BY — DATE
INSPECTOR'S ACCEPTANCE BY — DATE
FIELD VERIFICATION BY — DATE
DRAWINGS CORRECTED BY — DATE
MICRO-FILM INFORMATION
RECORDED BY — DATE
NO.

BENCH MARKS
SQUARE □ CHISELED ON TOP OF CONCRETE CURB AT N.W. RETURN OF CENTRAL AVE. & ALCAZAR ST. ELEV. 5324.87

REFERENCES
MAP NO. K-19

ROBERT F. SYKES NEW MEXICO 4591 REGISTERED PROFESSIONAL ENGINEER

NO.	DATE	REMARKS	BY
		REVISIONS	

DESIGN
DESIGNED BY: WILSON & CO., ENG. DATE: 6/82
DRAWN BY: RAL DATE: 6/82
CHECKED BY: MLB DATE: 6/82

CITY OF ALBUQUERQUE
MUNICIPAL DEVELOPMENT DEPARTMENT

FAIRGROUNDS STORM WATER RELIEF SYSTEM PHASE I

CENTRAL AVE. (EAST)

APPROVALS	ENGINEER	DATE	APPROVALS	ENGINEER	DATE
City Engineer			Traffic		
Liquid Waste			Water		
A.C.E. - Design			1543	SHEET 8 OF 42	
A.C.E. - Hydrology					

81-507

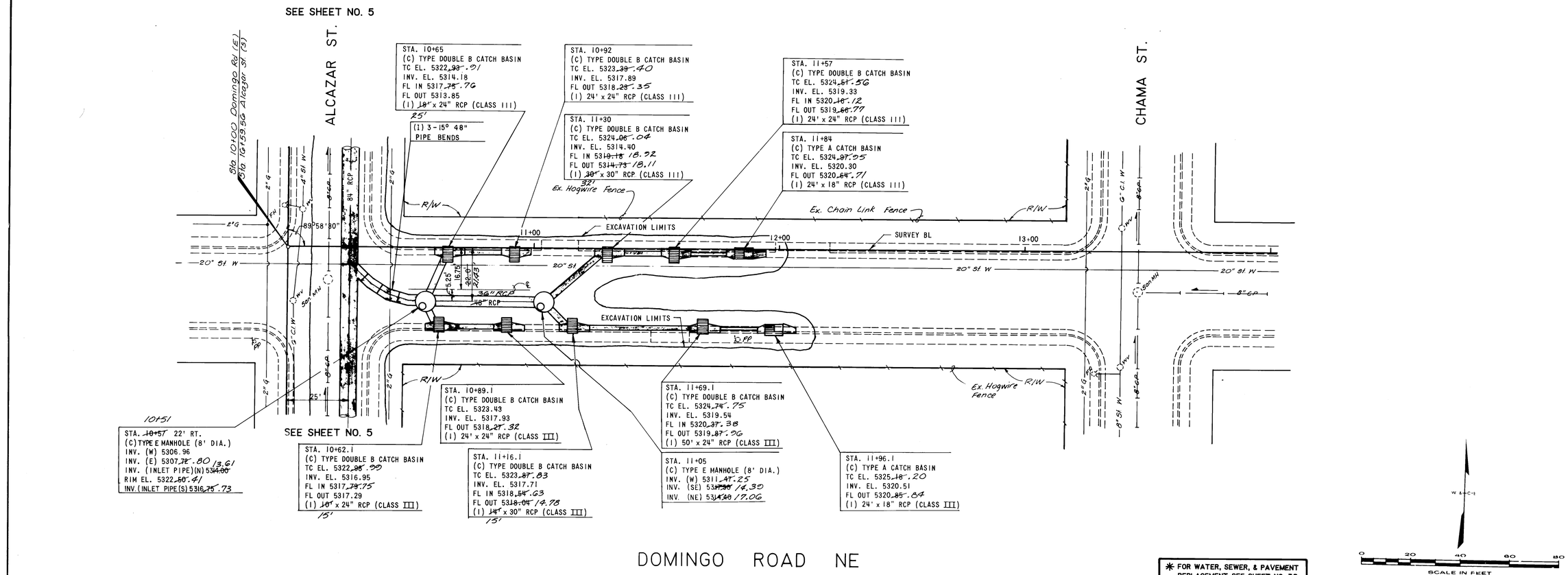

AS BUILT INFORMATION

CONTRACTOR	DATE
WORK STAKED BY	
INSPECTOR'S ACCEPTANCE BY	DATE
FIELD VERIFICATION BY	DATE
DRAWINGS CORRECTED BY	DATE

MICRO-FILM INFORMATION

RECORDED BY DATE

NO.

BENCH MARKS

SQUARE □ CHISELED ON TOP OF CONCRETE CURB AT N.W. RETURN OF ALCAZAR ST. & DOMINGO RD. ELEV. 5321.92

REFERENCES

MAP NO. K-19

ROBERT F. SYKES NEW MEXICO 4591 REGISTERED PROFESSIONAL ENGINEER

NO.	DATE	REMARKS	BY

REVISIONS

DESIGN

DESIGNED BY: WILSON & CO., ENG. DATE: 6/82

DRAWN BY: RAL DATE: 6/82

CHECKED BY: MLB DATE: 6/82

CITY OF ALBUQUERQUE
MUNICIPAL DEVELOPMENT DEPARTMENT

FAIRGROUNDS STORM WATER RELIEF SYSTEM PHASE I

DOMINGO ROAD (EAST)

APPROVALS	ENGINEER	DATE	APPROVALS	ENGINEER	DATE
City Engineer			Traffic		
Liquid Waste			Water		
A.C.E. - Design			1543	SHEET 9 OF 42	
A.C.E. - Hydrology					

81-507

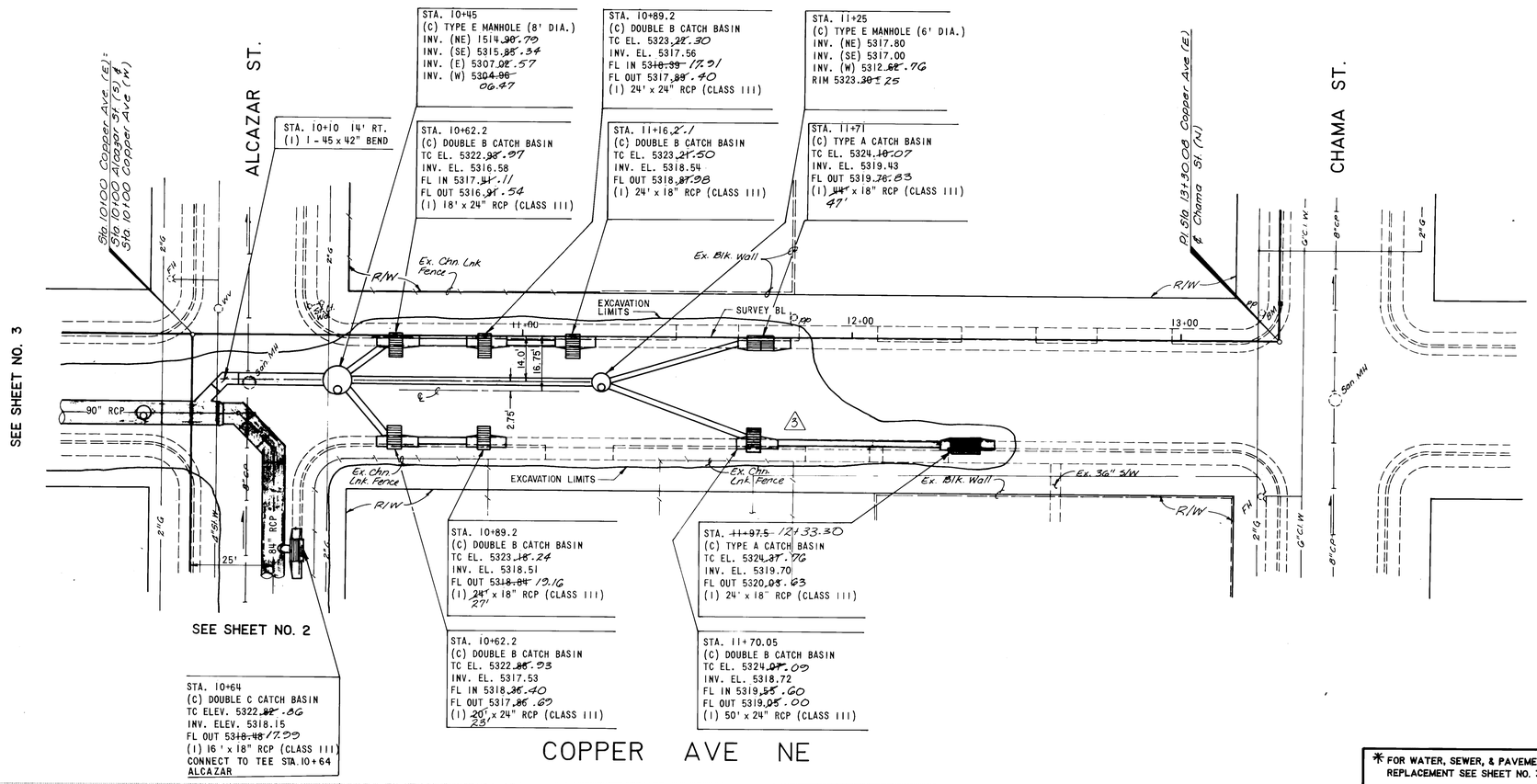

BENCH MARKS
9-K19 AT THE INTERSECTION OF LOUISIANA BLVD. & COPPER AVE. N.E. A SQUARE □ CHISELED ON TOP OF CONCRETE CURB AT THE N.N.E. RETURN ELEV. 5318.738
SQUARE □ CHISELED ON TOP OF CONCRETE CURB AT N.N.W. RETURN OF COPPER AVE. & CHAMA ST. ELEV. 5325.75

AS BUILT INFORMATION
CONTRACTOR
WORK STAKED BY
INSPECTOR'S ACCEPTANCE BY
FIELD VERIFICATION BY
DRAWINGS CORRECTED BY
DATE
MICRO-FILM INFORMATION
RECORDED BY
DATE
NO.

REFERENCES
MAP NO. K-19

ROGER F. SYKES
NEW MEXICO
4591
REGISTERED PROFESSIONAL ENGINEER

NO.	DATE	REMARKS	BY
2	2/19/83	Relocation of Inlets	VER

REVISIONS

DESIGN
DESIGNED BY: WILSON & CO., ENG. DATE: 6/82
DRAWN BY: RAL DATE: 6/82
CHECKED BY: MLB DATE: 6/82

CITY OF ALBUQUERQUE
MUNICIPAL DEVELOPMENT DEPARTMENT
FAIRGROUNDS STORM WATER RELIEF SYSTEM PHASE I

COPPER AVE. (EAST)

APPROVALS	ENGINEER	DATE	APPROVALS	ENGINEER	DATE
City Engineer			Traffic		
Liquid Waste			Water		
A.C.E. - Design			1543	SHEET 10	OF 42
A.C.E. - Hydrology					

DATE 8-9-83

81-507

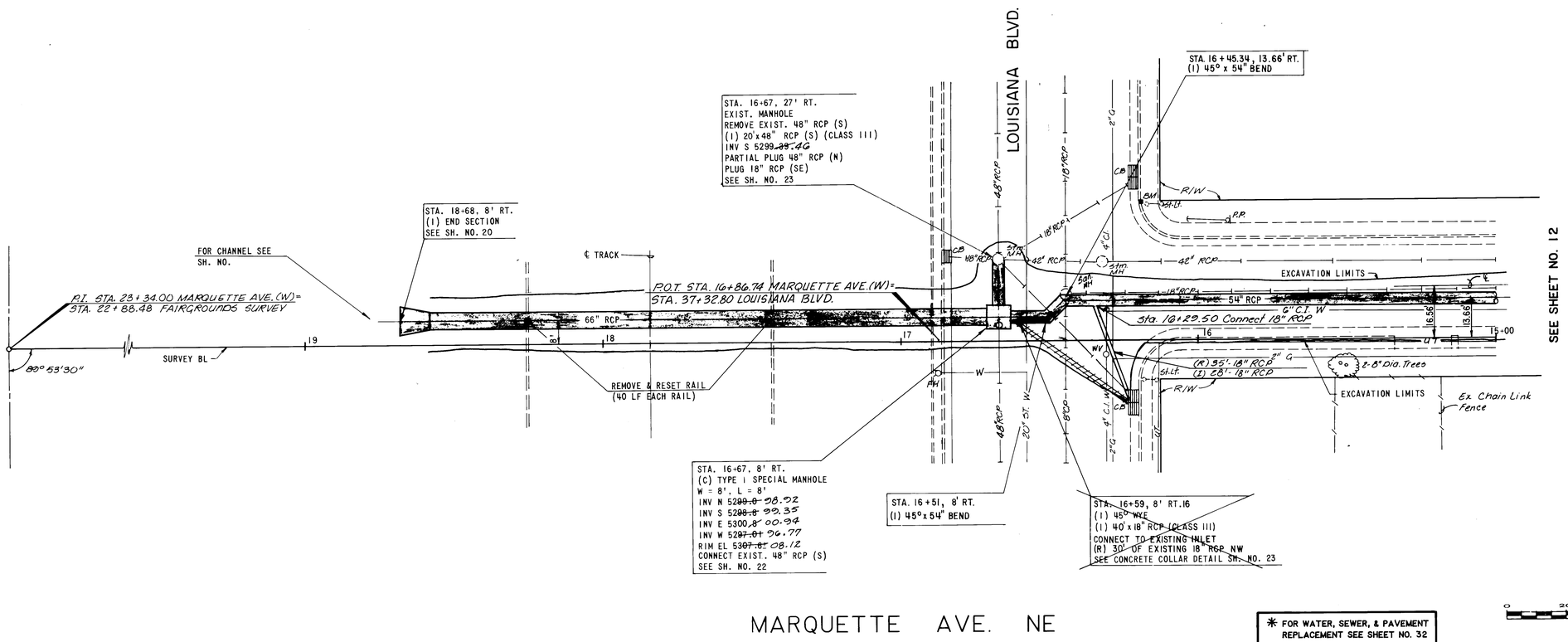

MARQUETTE AVE. NE

* FOR WATER, SEWER, & PAVEMENT REPLACEMENT SEE SHEET NO. 32

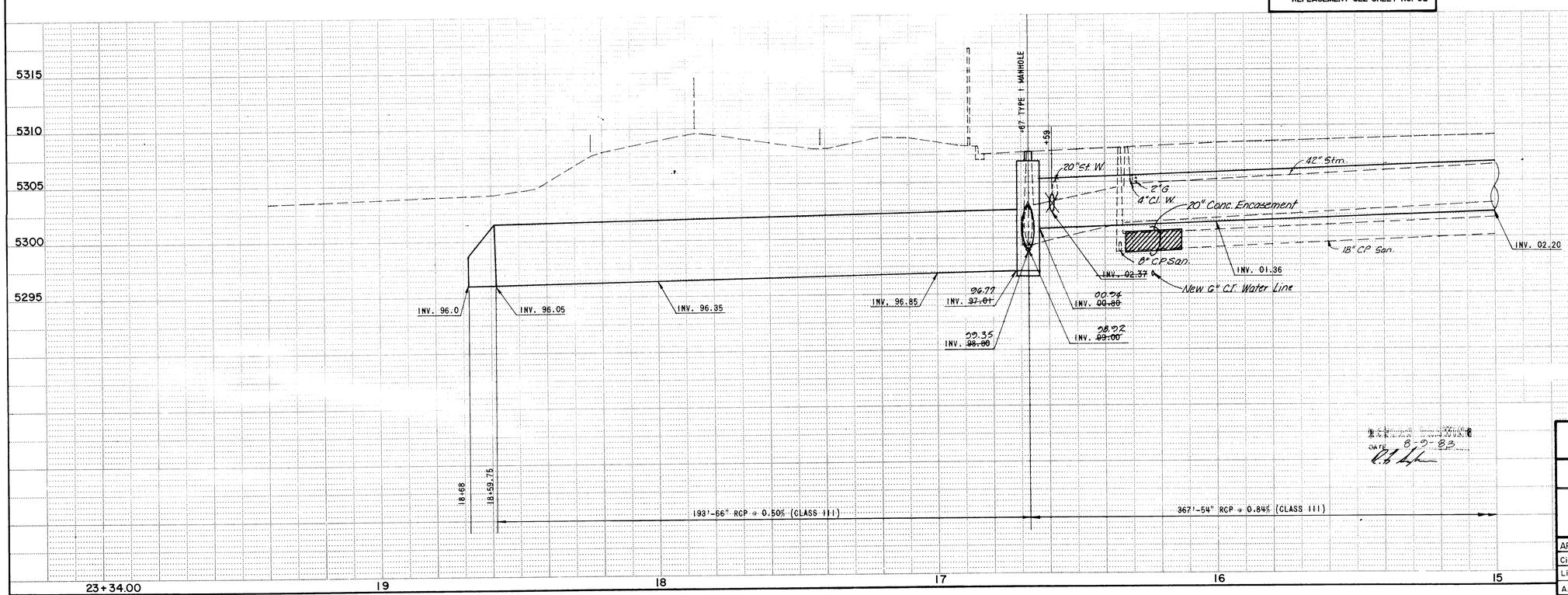

26 1543 1183

APPROVALS	ENGINEER	DATE	APPROVALS	ENGINEER	DATE
City Engineer			Traffic		
Liquid Waste			Water		
A.C.E. - Design					
A.C.E. - Hydrology					

1543

SHEET 11 OF 42

CITY OF ALBUQUERQUE
MUNICIPAL DEVELOPMENT DEPARTMENT

FAIRGROUNDS STORM WATER
RELIEF SYSTEM PHASE I

MARQUETTE AVE. (WEST)

AS BUILT INFORMATION

	DATE
CONTRACTOR	
WORK STAKED BY	
INSPECTOR'S ACCEPTANCE BY	
FIELD VERIFICATION BY	
DRAWINGS CORRECTED BY	
MICRO-FILM INFORMATION	
RECORDED BY	
NO.	

BENCH MARKS
SQUARE □ CHISELED ON TOP OF CONCRETE CURB AT N.E. RETURN OF MARQUETTE AVE. & LOUISIANA BLVD. ELEV. 5308.29

REFERENCES
MAP NO. K-19

ROBERT F. SYKES
NEW MEXICO
4591
REGISTERED PROFESSIONAL ENGINEER

NO.	DATE	REMARKS	BY
1	1-3-83	Water, San. & Storm Sewer Line Relocation	RTS

REVISIONS

DESIGN
DESIGNED BY: WILSON & CO., ENG. DATE: 6/82
DRAWN BY: RAL DATE: 6/82
CHECKED BY: MLB DATE: 6/82

81-507

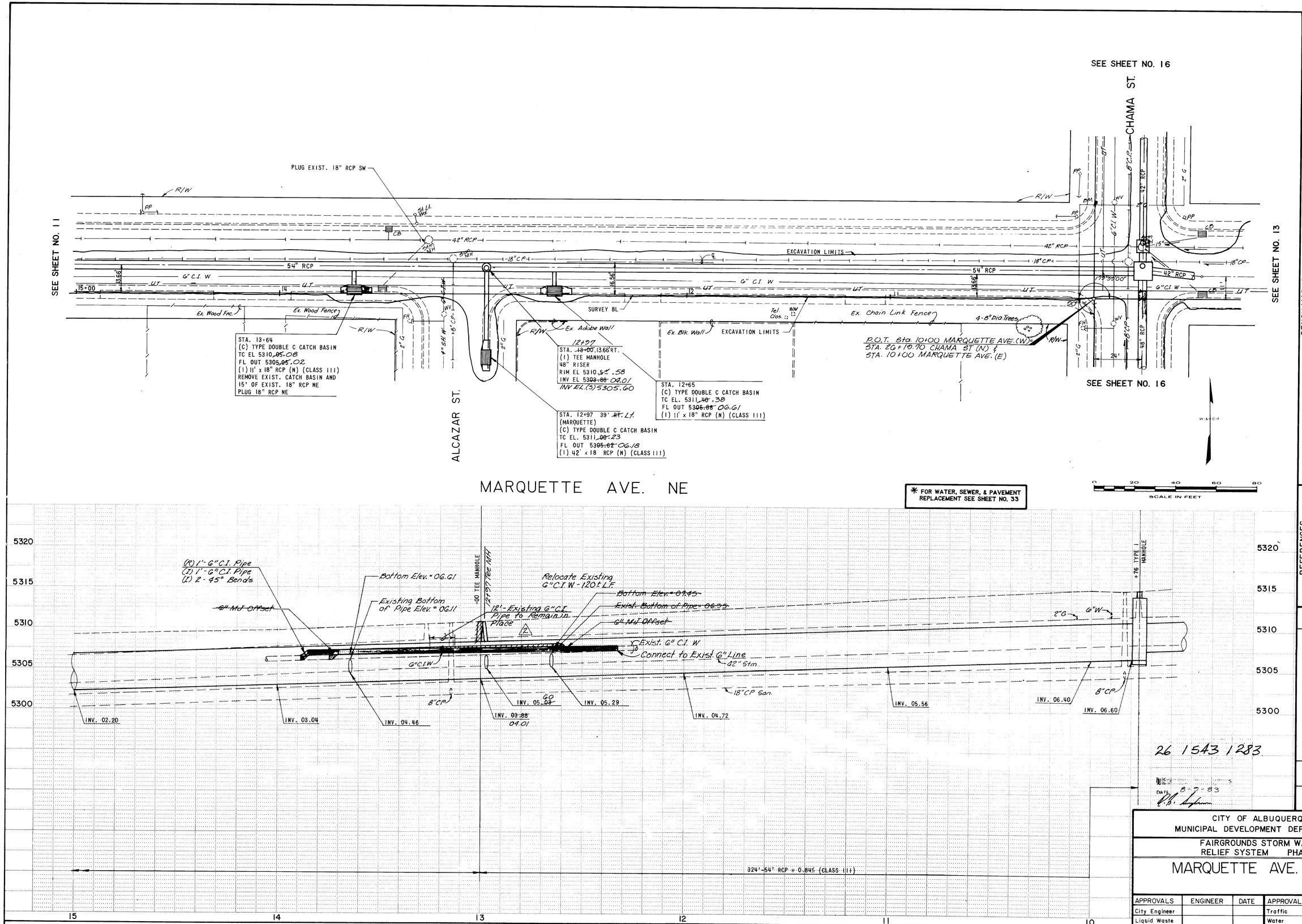

26 1543 1283

DATE 8-7-83

AS BUILT INFORMATION
CONTRACTOR
WORK STAKED BY — DATE
INSPECTOR'S ACCEPTANCE BY — DATE
VERIFICATION BY — DATE
DRAWINGS CORRECTED BY — DATE
MICRO-FILM INFORMATION
RECORDED BY — DATE
NO.

BENCH MARKS
SQUARE □ CHISELED ON TOP OF CONCRETE CURB AT N.W. RETURN OF CHAMA ST. & MARQUETTE AVE. ELEV. 5314.97

REFERENCES
MAP NO. K-19

ROBERT F. SYKES NEW MEXICO 4591 REGISTERED PROFESSIONAL ENGINEER

NO.	DATE	REMARKS	BY
2	2-17-83	Water line Adjustment	RFS
1	1-3-83	Water & Storm sew. line relocations	RFS

REVISIONS

DESIGN
DESIGNED BY: WILSON & CO., ENG. DATE: 6/82
DRAWN BY: RAL DATE: 6/82
CHECKED BY: MLB DATE: 6/82

CITY OF ALBUQUERQUE
MUNICIPAL DEVELOPMENT DEPARTMENT

FAIRGROUNDS STORM WATER RELIEF SYSTEM PHASE I

MARQUETTE AVE. (WEST)

APPROVALS	ENGINEER	DATE	APPROVALS	ENGINEER	DATE
City Engineer			Traffic		
Liquid Waste			Water		
A.C.E. - Design			1543	SHEET 12 OF 42	
A.C.E. - Hydrology					

81-507

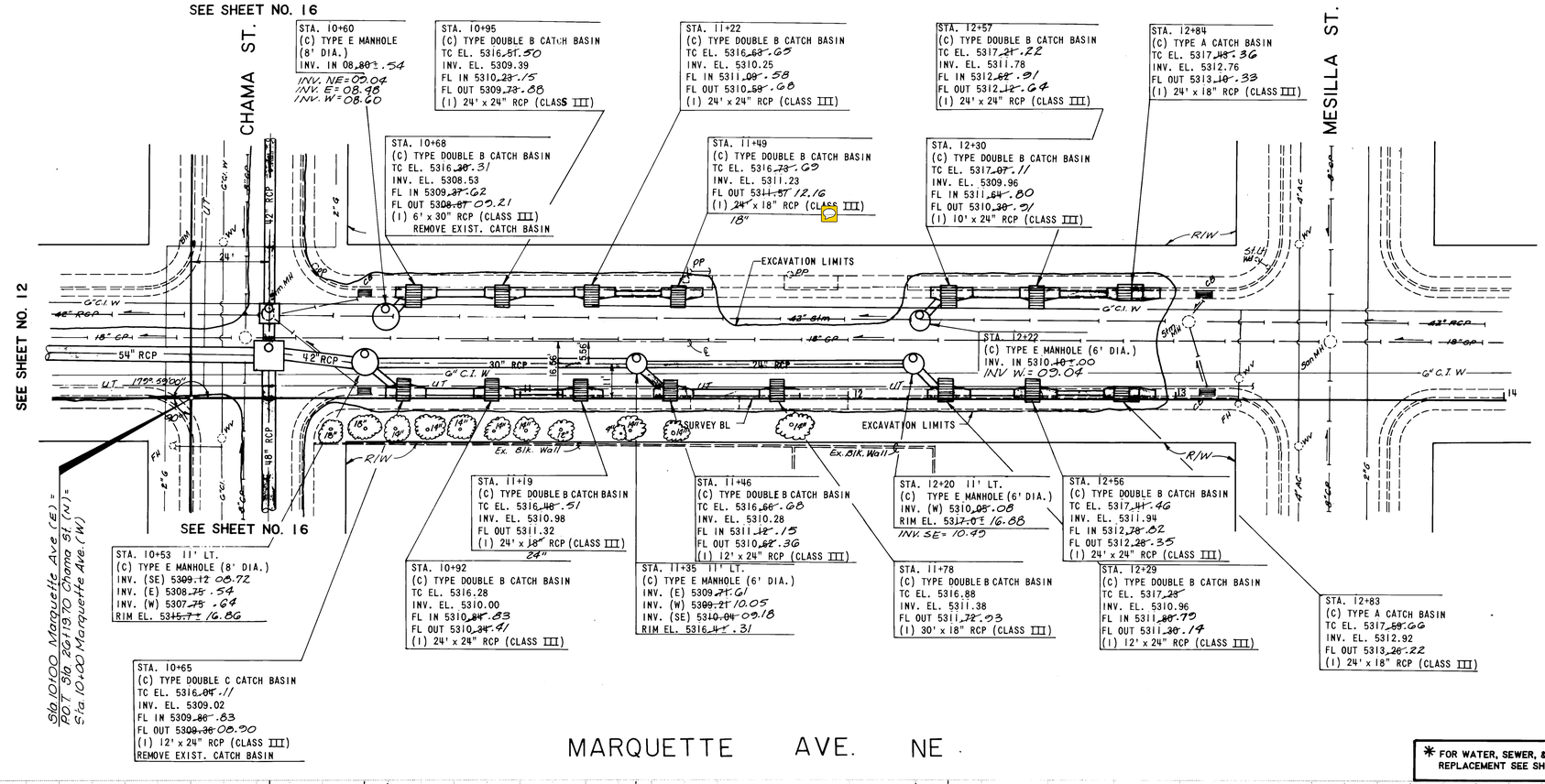

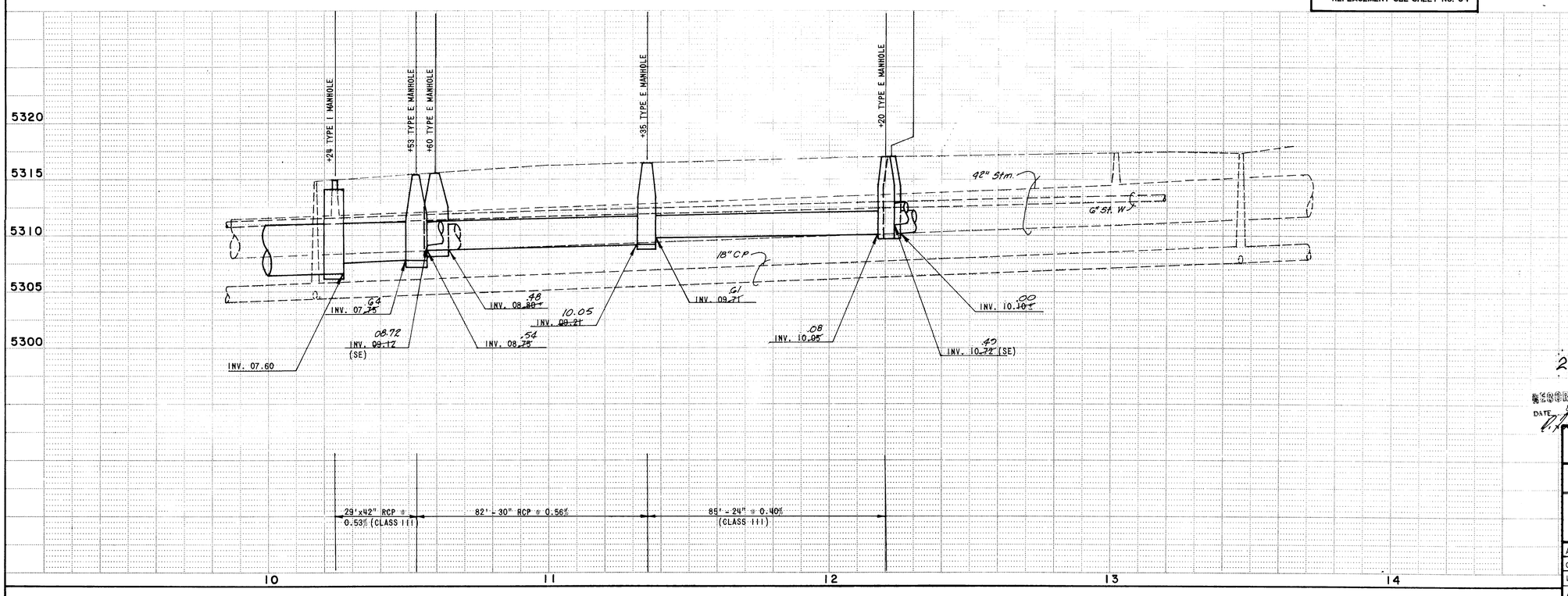

26 1543 1383

RECORD DRAWING
DATE 8-9-83

BENCH MARKS
SQUARE □ CHISELED ON TOP OF CONCRETE CURB AT N.W. RETURN OF MARQUETTE AVE. & CHAMA ST. ELEV. 5314.97

AS BUILT INFORMATION
CONTRACTOR STAKED BY — DATE
INSPECTOR'S ACCEPTANCE BY — DATE
FIELD VERIFICATION BY — DATE
DRAWINGS CORRECTED BY — DATE
MICRO-FILM INFORMATION
RECORDED BY — DATE
NO.

REFERENCES
MAP NO. K-19

ROBERT F. SYKES NEW MEXICO 4591 REGISTERED PROFESSIONAL ENGINEER

NO.	DATE	REMARKS	BY
1	1-2-83	Water & Storm Sew. line relocations	RFS

REVISIONS

DESIGN
DESIGNED BY: WILSON & CO., ENG. DATE: 6/82
DRAWN BY: RAL DATE: 6/82
CHECKED BY: MLB DATE: 6/82

CITY OF ALBUQUERQUE
MUNICIPAL DEVELOPMENT DEPARTMENT

FAIRGROUNDS STORM WATER RELIEF SYSTEM PHASE I

MARQUETTE AVE. (EAST)

APPROVALS	ENGINEER	DATE	APPROVALS	ENGINEER	DATE
City Engineer			Traffic		
Liquid Waste			Water		
A.C.E. - Design			1543	SHEET 13 OF 42	
A.C.E. - Hydrology					

81-507

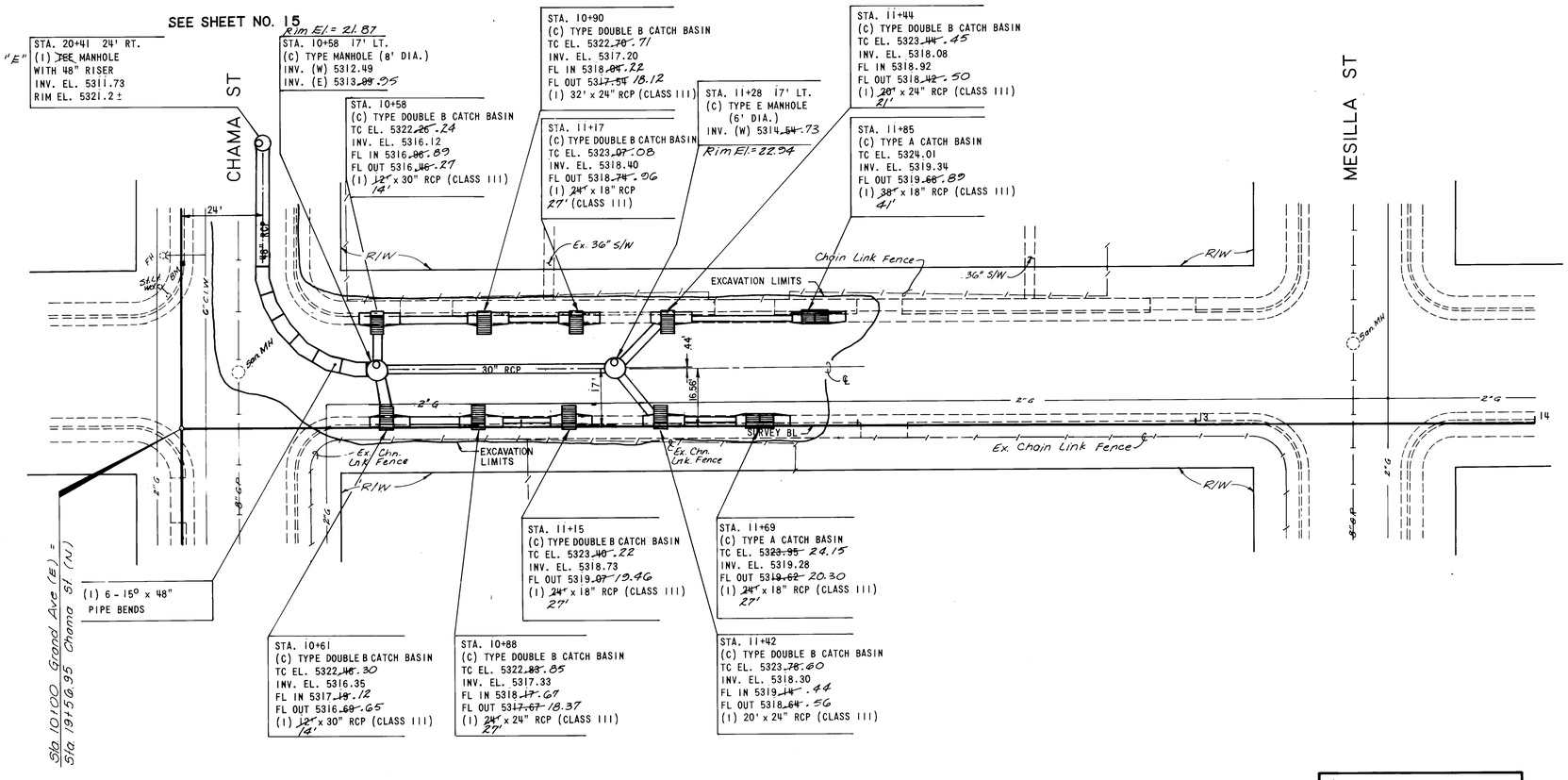

***FOR WATER, SEWER, & PAVEMENT REPLACEMENT SEE SHEET NO. 35**

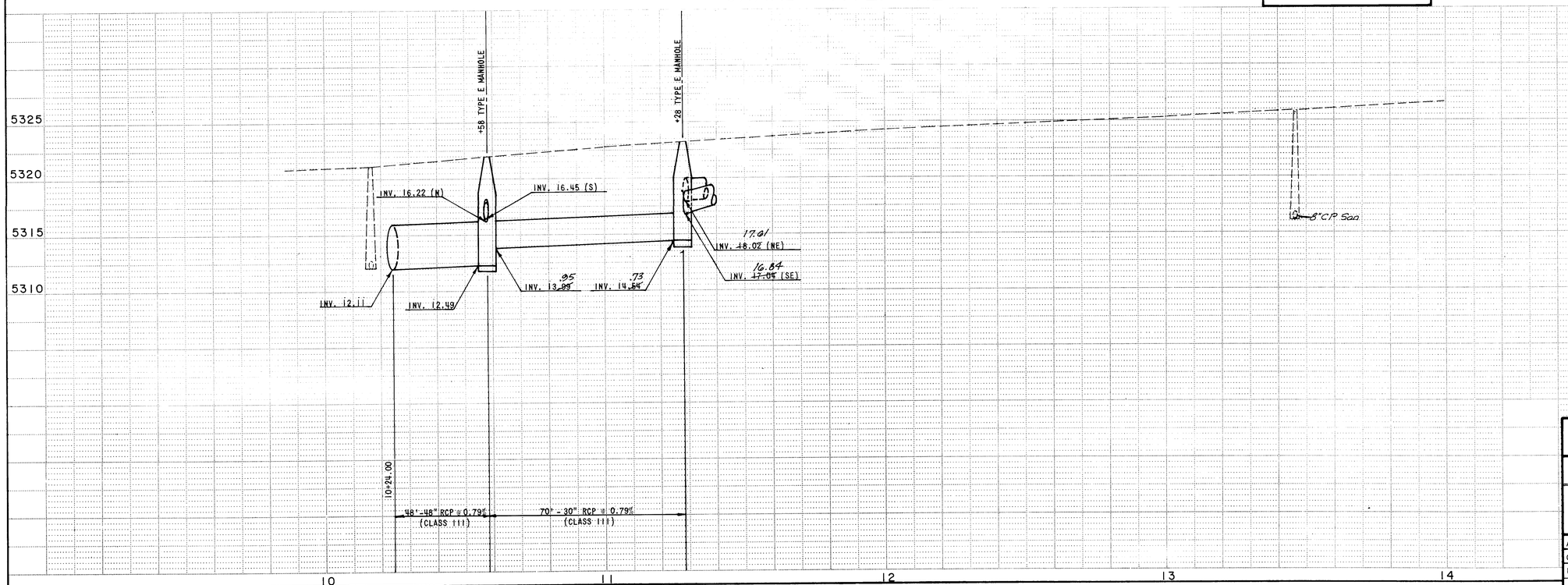

26 1543 1483

AS BUILT REVIEWED
DATE 8-2-83

BENCH MARKS
SQUARE □ CHISELED ON TOP OF CONCRETE CURB AT N.W. RETURN OF CHAMA ST. & GRAND AVE. ELEV. 5321.20

AS BUILT INFORMATION
CONTRACTOR
WORK STAKED BY
WORK INSPECTED BY
ACCEPTANCE BY
VERIFICATION BY
DRAWINGS CORRECTED BY
MICRO-FILM INFORMATION
RECORDED BY
NO.
DATE

REFERENCES
MAP NO. K-19

ROBERT F. SYKES NEW MEXICO 4591 REGISTERED PROFESSIONAL ENGINEER

NO.	DATE	REMARKS	BY
		REVISIONS	

DESIGN
DESIGNED BY: WILSON & CO., ENG. DATE: 6/82
DRAWN BY: RAL DATE: 6/82
CHECKED BY: MLB DATE: 6/82

CITY OF ALBUQUERQUE
MUNICIPAL DEVELOPMENT DEPARTMENT
FAIRGROUNDS STORM WATER
RELIEF SYSTEM PHASE I
GRAND AVE. (EAST)

APPROVALS	ENGINEER	DATE	APPROVALS	ENGINEER	DATE
City Engineer			Traffic		
Liquid Waste			Water		
A.C.E. - Design			1543	SHEET 14 OF 42	
A.C.E. - Hydrology					

81-507

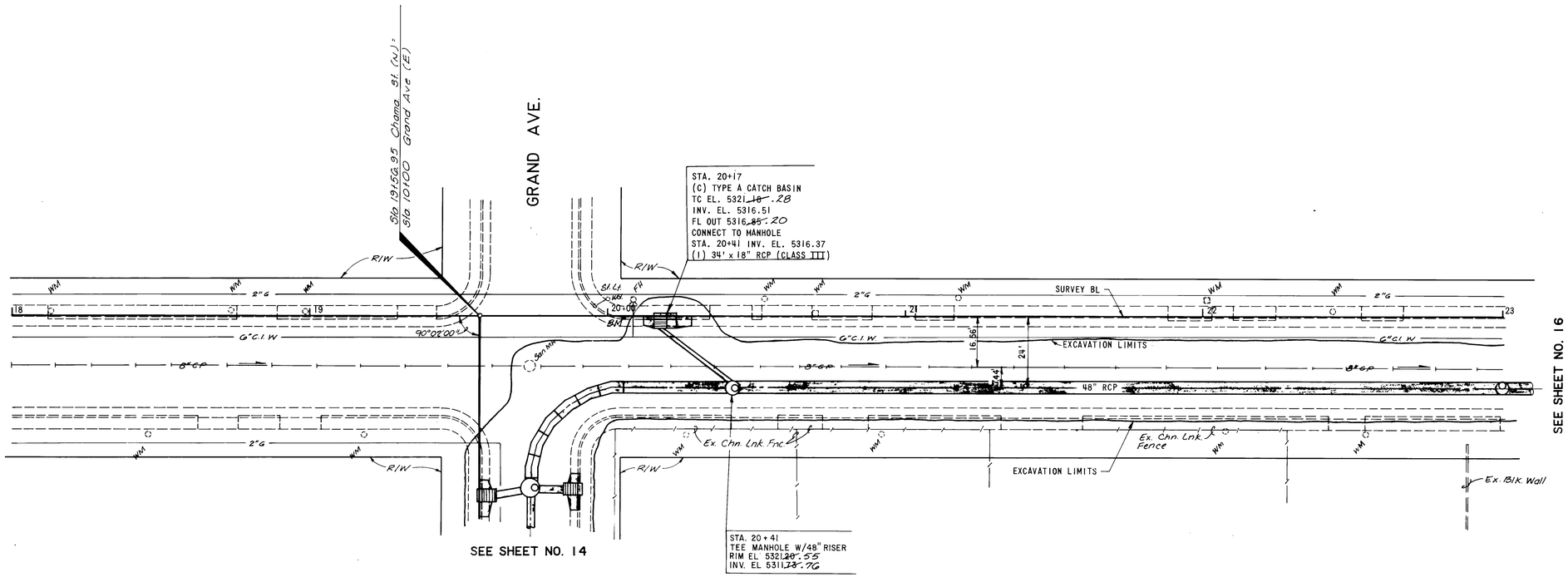

CHAMA STREET NE

* FOR WATER, SEWER, & PAVEMENT REPLACEMENT SEE SHEET NO.36

0 20 40 60 80
SCALE IN FEET

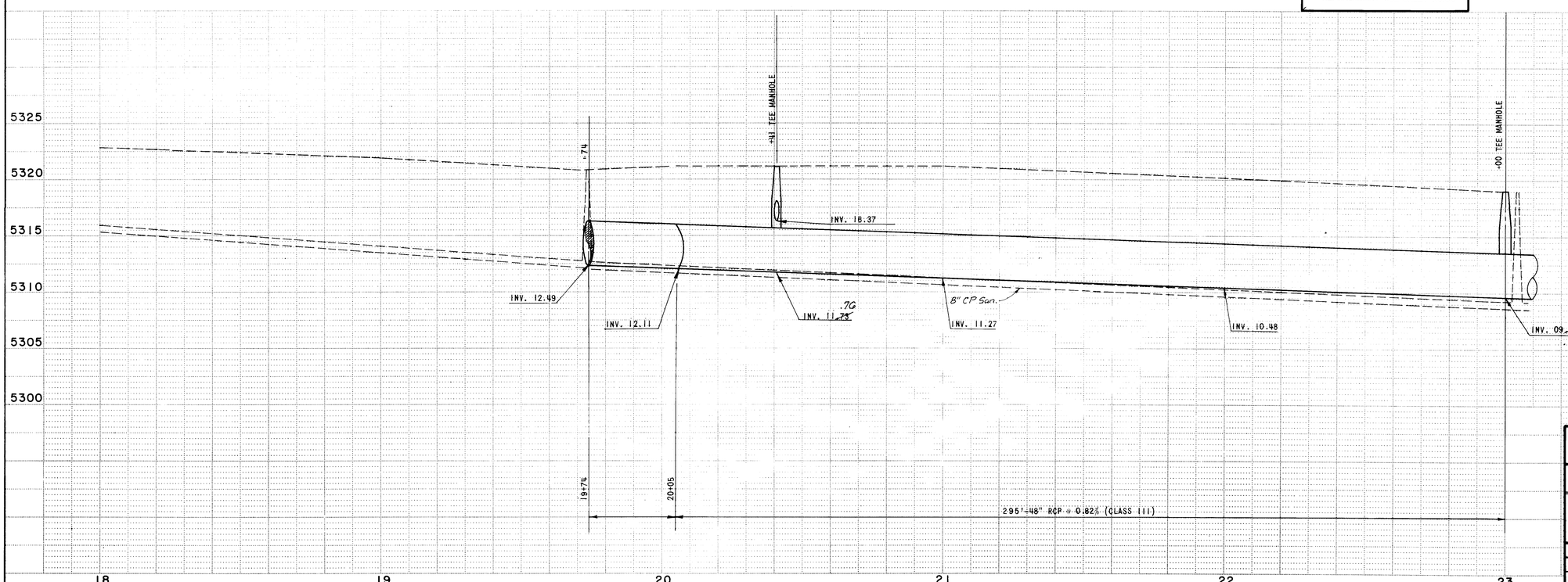

RECORD DRAWING
DATE 8-2-83

AS BUILT INFORMATION
CONTRACTOR
WORK STAKED BY — DATE
INSPECTOR'S ACCEPTANCE BY — DATE
FIELD VERIFICATION BY — DATE
DRAWINGS CORRECTED BY — DATE
MICRO-FILM INFORMATION
RECORDED BY — DATE
NO.

BENCH MARKS
SQUARE □ CHISELED ON TOP OF CONCRETE CURB AT N.W. RETURN OF CHAMA ST. & GRAND AVE. ELEV. 5321.20

REFERENCES
MAP NO. K-19

ROBERT F. SYKES NEW MEXICO (4559) REGISTERED PROFESSIONAL ENGINEER

NO.	DATE	REMARKS	BY

REVISIONS

DESIGN
DESIGNED BY: WILSON & CO., ENG. DATE: 6/82
DRAWN BY: RAL DATE: 6/82
CHECKED BY: MLB DATE: 6/82

CITY OF ALBUQUERQUE
MUNICIPAL DEVELOPMENT DEPARTMENT

FAIRGROUNDS STORM WATER RELIEF SYSTEM PHASE 'I

CHAMA STREET (NORTH)

APPROVALS	ENGINEER	DATE	APPROVALS	ENGINEER	DATE
City Engineer			Traffic		
Liquid Waste			Water		
A.C.E. - Design			1543	SHEET 15 OF 42	
A.C.E. - Hydrology					

81-507

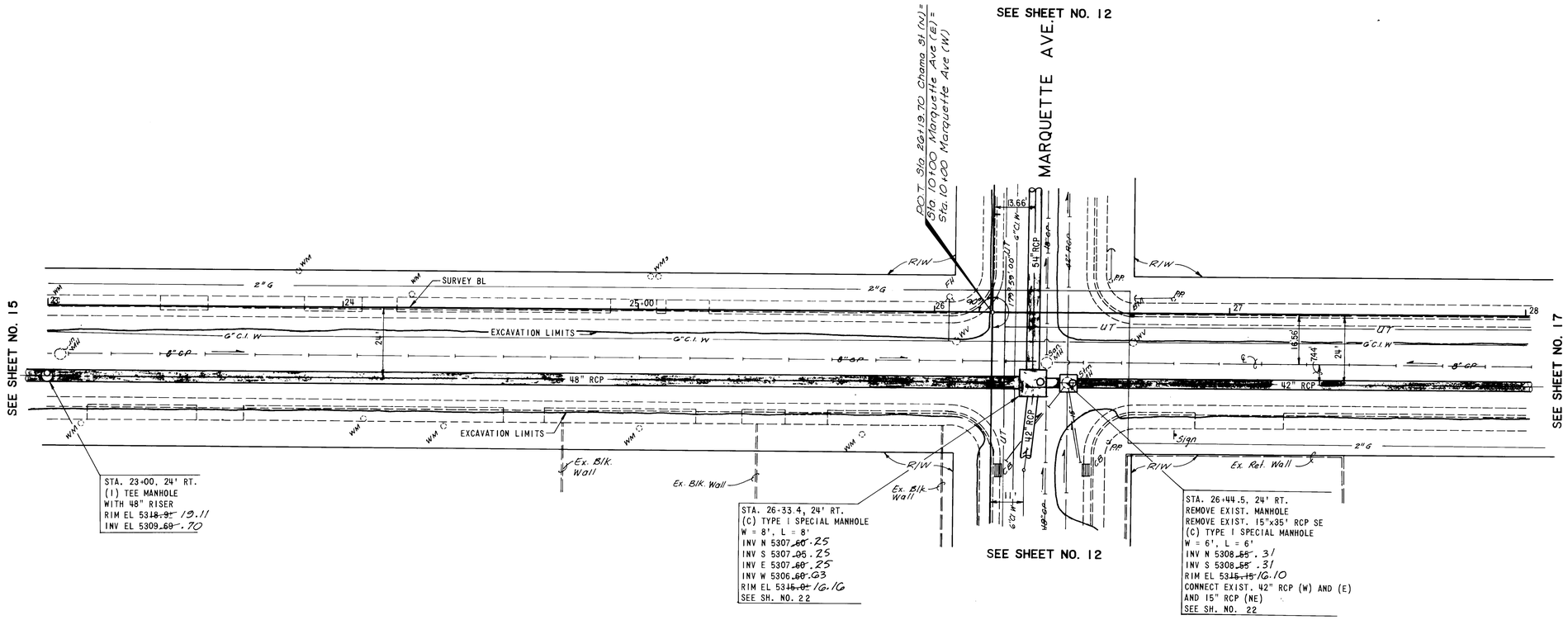

CHAMA STREET NE

* FOR WATER, SEWER, & PAVEMENT REPLACEMENT SEE SHEET NO. 37

SCALE IN FEET 0 20 40 60 80

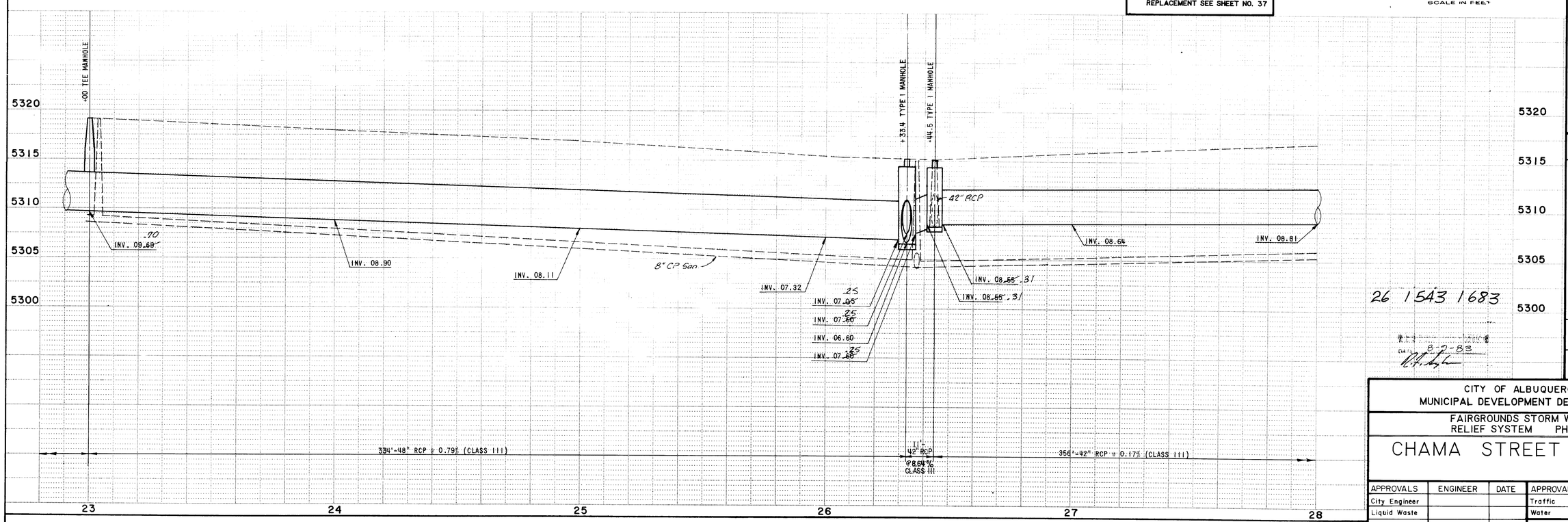

26 1543 1683

8-2-83

AS BUILT INFORMATION

CONTRACTOR		
WORK STAKED BY		DATE
INSPECTOR'S ACCEPTANCE BY		DATE
FIELD VERIFICATION BY		DATE
DRAWINGS CORRECTED BY		DATE

MICRO-FILM INFORMATION

RECORDED BY	DATE
NO.	

BENCH MARKS

SQUARE □ CHISELED ON TOP OF CONCRETE CURB AT N.W. RETURN OF CHAMA ST. & MARQUETTE AVE. ELEV. 5314.97

REFERENCES

MAP NO. K-19

ROBERT F. SYKES NEW MEXICO 4591 REGISTERED PROFESSIONAL ENGINEER

NO.	DATE	REMARKS	BY
1	1-3-83	Water line & Storm Sew. line relocation RFS	

REVISIONS

DESIGN

DESIGNED BY: WILSON & CO., ENG. DATE: 6/82
DRAWN BY: RAL DATE: 6/82
CHECKED BY: MLB DATE: 6/82

CITY OF ALBUQUERQUE
MUNICIPAL DEVELOPMENT DEPARTMENT

FAIRGROUNDS STORM WATER RELIEF SYSTEM PHASE I

CHAMA STREET (NORTH)

APPROVALS	ENGINEER	DATE	APPROVALS	ENGINEER	DATE
City Engineer			Traffic		
Liquid Waste			Water		
A.C.E. - Design					
A.C.E. - Hydrology					

1543

SHEET 16 OF 42

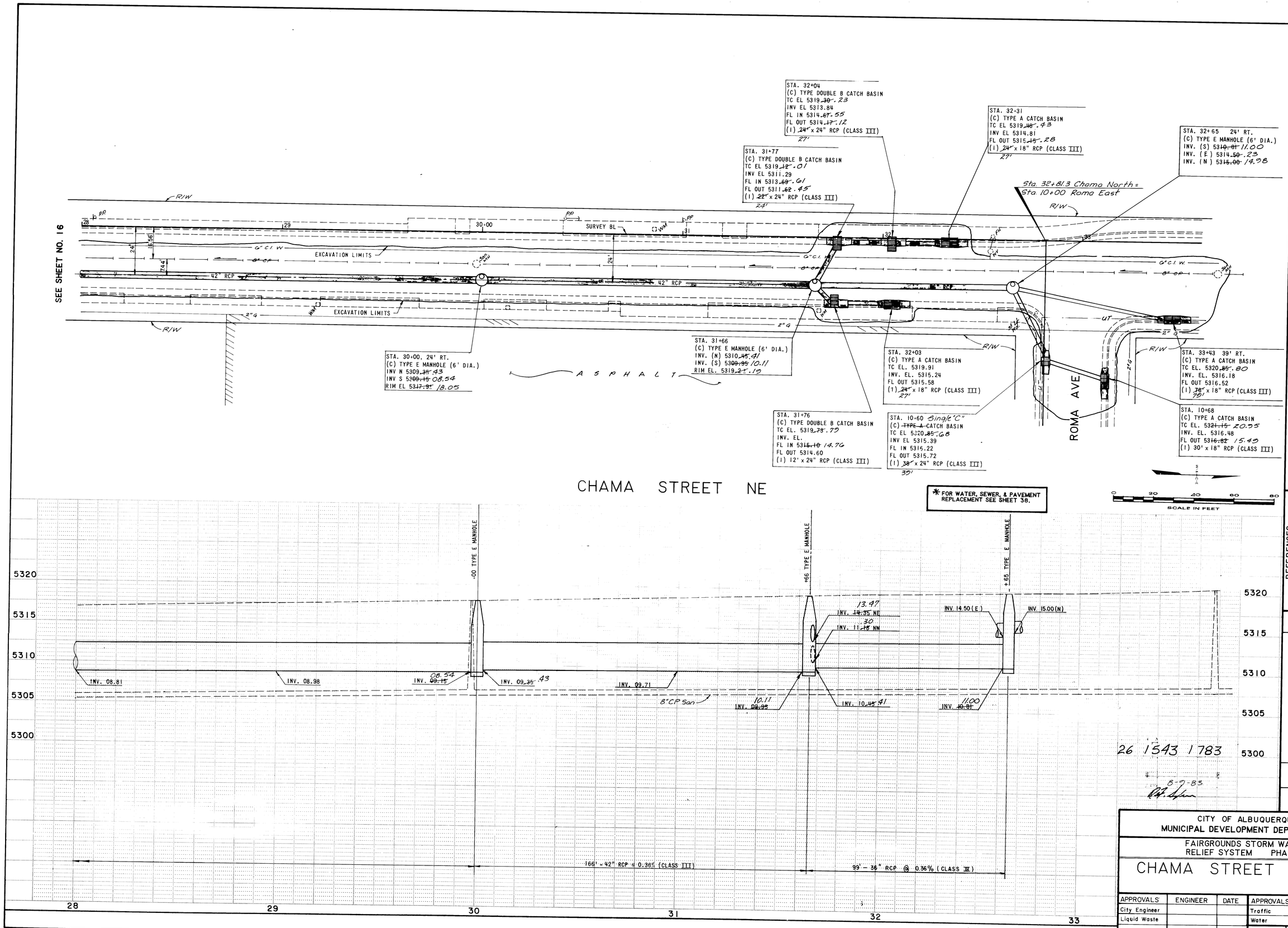

AS BUILT INFORMATION

CONTRACTOR	DATE
WORK STAKED BY	DATE
INSPECTOR'S ACCEPTANCE BY	DATE
FIELD VERIFICATION BY	DATE
DRAWINGS CORRECTED BY	DATE

MICRO-FILM INFORMATION

RECORDED BY	DATE
NO.	

BENCH MARKS

REFERENCES
MAP NO. K-19

ROBERT F. SYKES NEW MEXICO 4591 REGISTERED PROFESSIONAL ENGINEER

NO.	DATE	REMARKS	BY

REVISIONS

DESIGN

DESIGNED BY: WILSON & CO., ENG. DATE: 6/82
DRAWN BY: RAL DATE: 6/82
CHECKED BY: MLB DATE: 6/82

CITY OF ALBUQUERQUE
MUNICIPAL DEVELOPMENT DEPARTMENT

FAIRGROUNDS STORM WATER
RELIEF SYSTEM PHASE I

CHAMA STREET (NORTH)

APPROVALS	ENGINEER	DATE	APPROVALS	ENGINEER	DATE
City Engineer			Traffic		
Liquid Waste			Water		
A.C.E. - Design					
A.C.E. - Hydrology					

1543

SHEET 17 OF 42

Fairgrounds Storm Water Relief System
New Mexico State Fairgrounds
Albuquerque, New Mexico
Job No. 82022

LOG OF TEST BORING NO. 1

Date Drilled August 13, 1982
Equipment CME-75 drill rig

Surface Elevation 06.3
Datum WCEA Hub El. 07.57

Depth Feet	Graphical Log	Sample	Sample Type	Blows/Ft. (40 lb. 30")	Freefall Drop	Continuous Penetration Resistance	Moisture %	DESCRIPTION
0		X	U	31			8	SILTY SAND, predominantly fine, nonplastic, light brown, SM
		X	U	42			9	SILTY SAND, coarse to fine, nonplastic, light brown, SM
5		X	U	57 (no recovery)				GRAVELLY SAND, trace silt, nonplastic, light brown, SM-SW
		X	S	19			1	
10		X	S	9			5	SAND, predominantly fine, trace silt, nonplastic, light brown, SP
							10	CLAYEY SAND, low plasticity, brown, SC-SM Some streaks of cleaner, fine sand
		X	U	52			6	
15		X	U	100/10½"			4	GRAVELLY SAND, predominantly coarse, trace silt, nonplastic, reddish brown, SP

Stopped auger @ 14.0'
Stopped sampler @ 14.8'

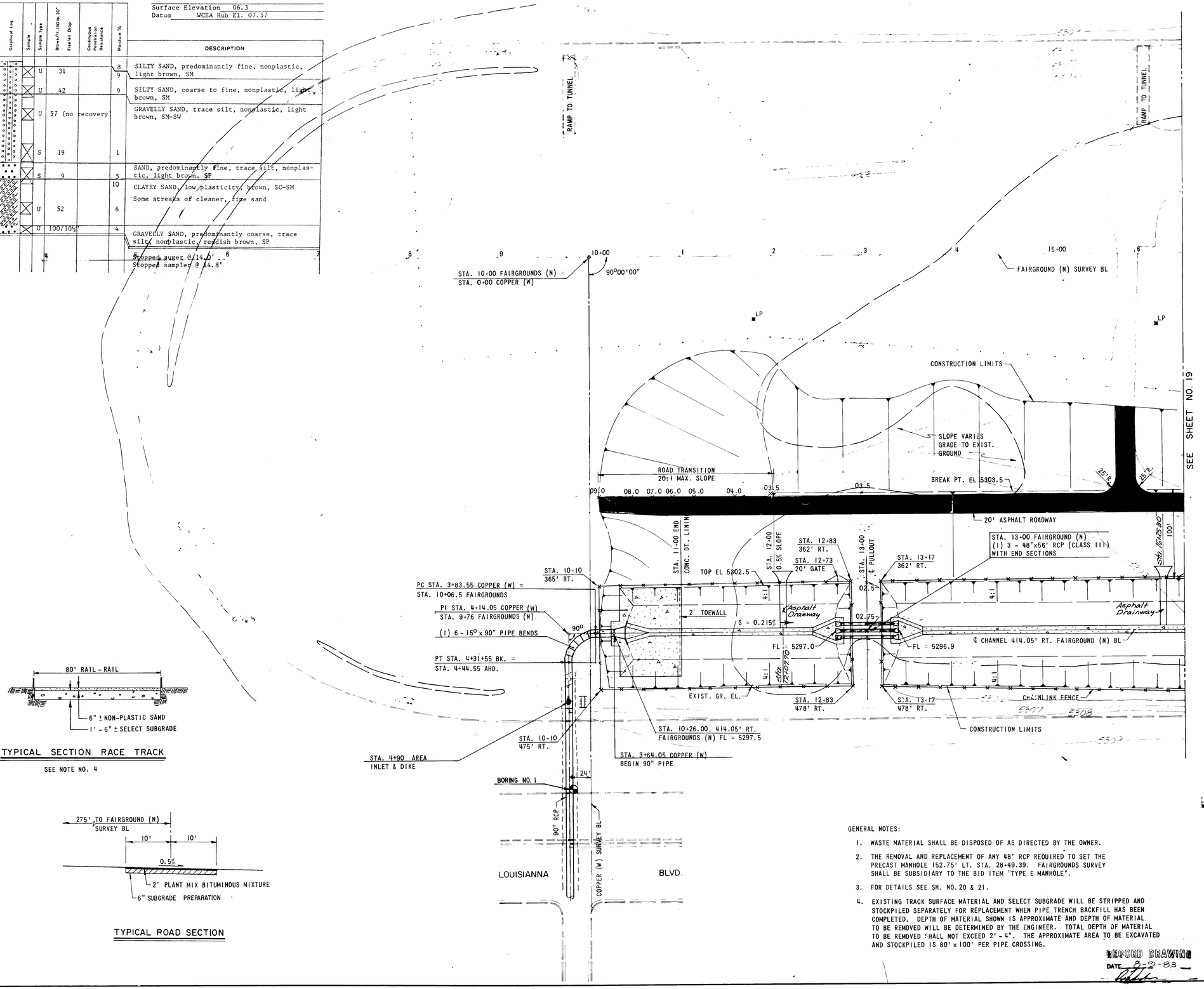

TYPICAL SECTION RACE TRACK

SEE NOTE NO. 4

TYPICAL ROAD SECTION

GENERAL NOTES:

1. WASTE MATERIAL SHALL BE DISPOSED OF AS DIRECTED BY THE OWNER.
2. THE REMOVAL AND REPLACEMENT OF ANY 48" RCP REQUIRED TO SET THE PRECAST MANHOLE 152.75' LT. STA. 28+49.39. FAIRGROUNDS SURVEY SHALL BE SUBSIDIARY TO THE BID ITEM "TYPE E MANHOLE".
3. FOR DETAILS SEE SH. NO. 20 & 21.
4. EXISTING TRACK SURFACE MATERIAL AND SELECT SUBGRADE WILL BE STRIPPED AND STOCKPILED SEPARATELY FOR REPLACEMENT WHEN PIPE TRENCH BACKFILL HAS BEEN COMPLETED. DEPTH OF MATERIAL SHOWN IS APPROXIMATE AND DEPTH OF MATERIAL TO BE REMOVED WILL BE DETERMINED BY THE ENGINEER. TOTAL DEPTH OF MATERIAL TO BE REMOVED SHALL NOT EXCEED 2'-4". THE APPROXIMATE AREA TO BE EXCAVATED AND STOCKPILED IS 80' x 100' PER PIPE CROSSING.

RECORD DRAWING
DATE 8-2-83

AS BUILT INFORMATION
CONTRACTOR
WORK STAKED BY — DATE
INSPECTED BY — DATE
ACCEPTANCE BY — DATE
VERIFICATION BY — DATE
FIELD DRAWINGS COLLECTED BY — DATE
MICRO-FILM INFORMATION
RECORDED BY — DATE
NO.

BENCH MARKS
9-K19 AT THE INTERSECTION OF LOUISIANA BLVD. AND COPPER AVE. NE.
A SQUARE □ CHISELED ON TOP OF CONCRETE CURB AT THE NWE RETURN ELEV. 5318.738

REFERENCES
MAP NO.

ROBERT F. SYKES
NEW MEXICO
4591
REGISTERED PROFESSIONAL ENGINEER

NO.	DATE	REMARKS	BY

REVISIONS

DESIGN
DESIGNED BY: WILSON & CO., ENG. DATE: 6/82
DRAWN BY: RAL DATE: 6/82
CHECKED BY: SJM DATE: 6/82

CITY OF ALBUQUERQUE
MUNICIPAL DEVELOPMENT DEPARTMENT

FAIRGROUNDS STORM WATER
RELIEF SYSTEM PHASE I

FAIRGROUND CHANNEL PLAN LAYOUT

APPROVALS	ENGINEER	DATE	APPROVALS	ENGINEER	DATE
City Engineer			Traffic		
Liquid Waste			Water		
A.C.E. - Design			1543	SHEET 18 OF 42	
A.C.E. - Hydrology					

81-507

Fairgrounds Storm Water Relief System
New Mexico State Fairgrounds
Albuquerque, New Mexico
Job No. 82022

LOG OF TEST BORING NO. 3

Date Drilled August 13, 1982
Equipment CME-75 drill rig
Surface Elevation 12.6
Datum WCEA Hub El. 13.50

Depth - Feet	Sample Type	Blows/ft. 140 lb. 30"	Moisture %	DESCRIPTION
0	U	22	9	SAND, predominantly fine, some silt, nonplastic, light brown, SM
	U	18	8	SILTY SAND, trace clay, low plasticity to nonplastic, brown, SM
	U	18	5	SILTY SAND, predominantly fine, nonplastic to low plasticity, tan, SM
5				SILTY SAND, coarse to fine, some gravel, nonplastic, reddish brown, SM
	U	19	6	
	U	13	4	
15	U	20	6	
20	U	12	3	
25	U	49	10	SILTY CLAY, some sand, some calcareous cementation, low to medium plasticity, tan with white streaks, CL
				Stopped auger @ 24.0' Stopped sampler @ 25.0'

Fairgrounds Storm Water Relief System
New Mexico State Fairgrounds
Albuquerque, New Mexico
Job No. 82022

LOG OF TEST BORING NO. 2

Date Drilled August 13, 1982
Equipment CME-75 drill rig
Surface Elevation 11.3
Datum WCEA Hub El. 11.58

Depth - Feet	Sample Type	Blows/ft. 140 lb. 30"	Moisture %	DESCRIPTION
0	U	31	8	SILTY SAND, predominantly fine, nonplastic, brown, SM
	U	32	6	SILTY SAND, some clay, low plasticity, brown, SM-SC
5	U	26	6	SILTY SAND, coarse to fine, trace clay, trace gravel, low plasticity, light brown, SM
	U	28	8	
10	U	23	4	SILTY SAND, predominantly fine, some medium to fine gravel, light brown, nonplastic, SM
	U	(Sampler refused, no recovery)	7	GRAVELLY SAND, coarse to medium, nonplastic, reddish brown, SP
15	U	15	8	CLAYEY SAND, predominantly fine, low to medium plasticity, light brown, SC
				Stopped auger @ 14.0' Stopped sampler @ 15.0'

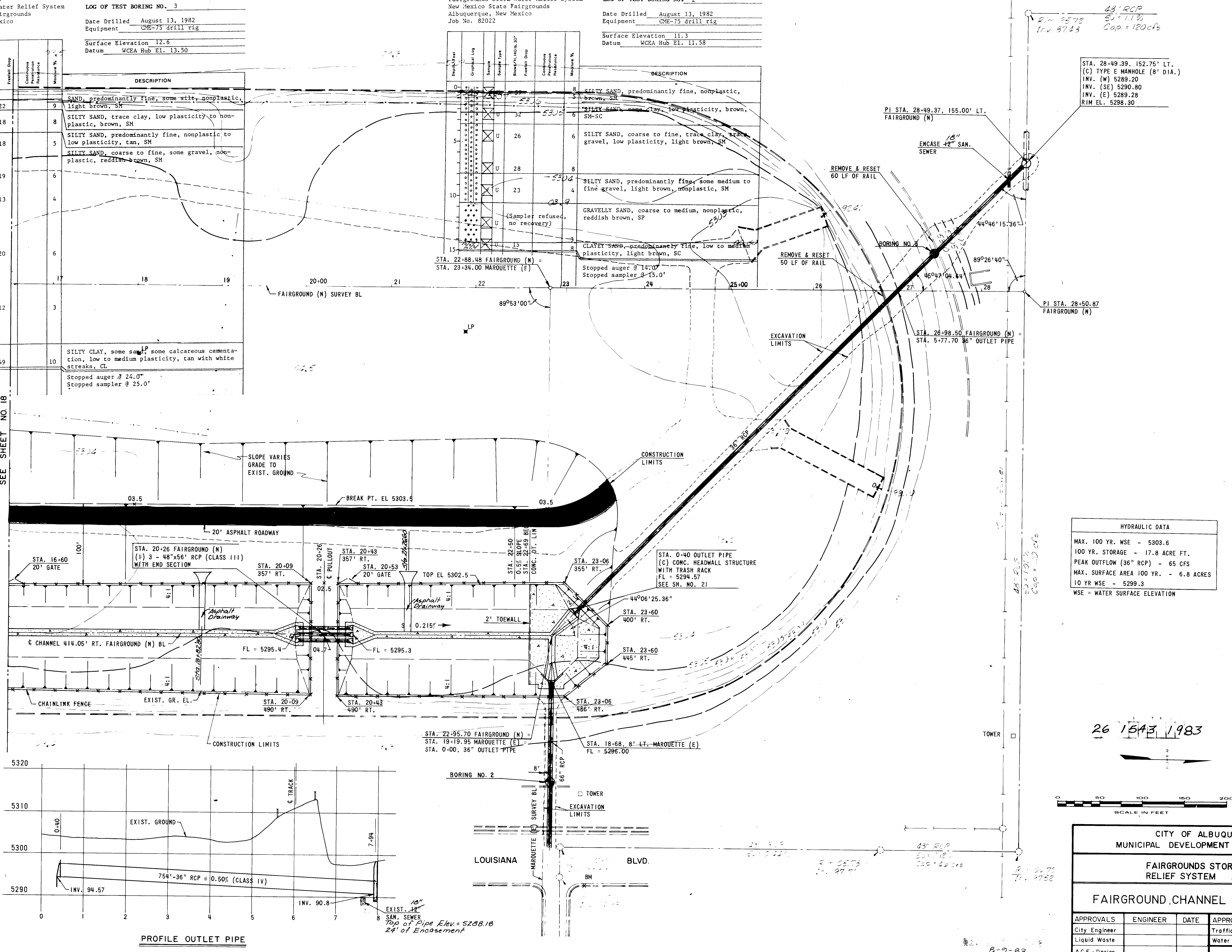

HYDRAULIC DATA

MAX. 100 YR. WSE	5303.6
100 YR. STORAGE	17.8 ACRE FT.
PEAK OUTFLOW (36" RCP)	65 CFS
MAX. SURFACE AREA 100 YR.	6.8 ACRES
10 YR WSE	5299.3

WSE = WATER SURFACE ELEVATION

BENCH MARKS

SQUARE ☐ CHISELED ON TOP OF CONCRETE CURB AT NNE RETURN OF MARQUETTE AVE. AND LOUISIANA BLVD., ELEV. 5308.29

AS BUILT INFORMATION: CONTRACTOR / WORK STAKED BY / INSPECTOR'S ACCEPTANCE BY / FIELD VERIFICATION BY / DRAWINGS CORRECTED BY — DATE

MICRO-FILM INFORMATION: RECORDED BY / DATE / NO.

REFERENCES: MAP NO. K-18-Z

ROBERT F. SYKES, REGISTERED PROFESSIONAL ENGINEER, 4591

REVISIONS: NO. / DATE / REMARKS / BY

DESIGN: DESIGNED BY: WILSON & CO., ENG. DATE: 6/82; DRAWN BY: RAL DATE: 6/82; CHECKED BY: SJH DATE: 6/82

26 1543 1983

CITY OF ALBUQUERQUE
MUNICIPAL DEVELOPMENT DEPARTMENT

FAIRGROUNDS STORM WATER RELIEF SYSTEM PHASE I

FAIRGROUND CHANNEL PLAN LAYOUT

APPROVALS	ENGINEER	DATE	APPROVALS	ENGINEER	DATE
City Engineer			Traffic		
Liquid Waste			Water		
A.C.E.-Design					
A.C.E.-Hydrology					

1593 SHEET 19 OF 42

8-9-83

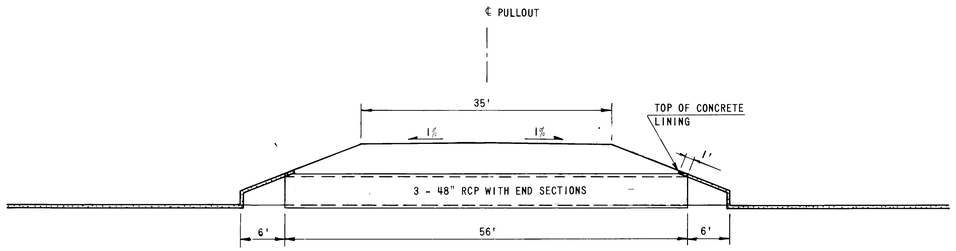

ELEVATION

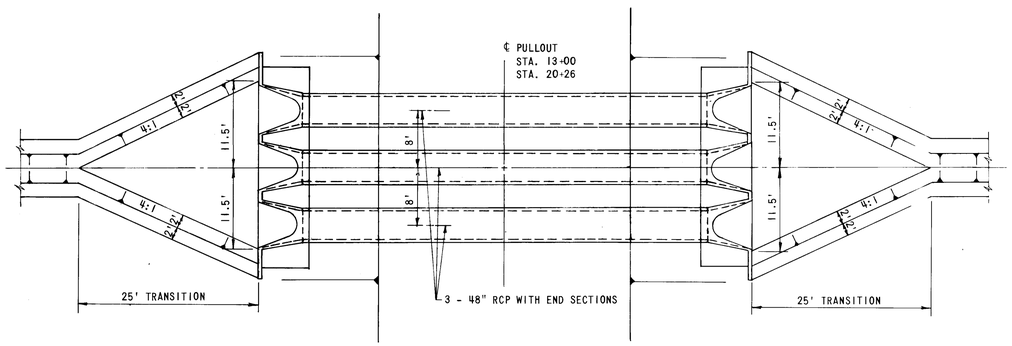

PLAN

TYPICAL PULLOUT DETAIL

1" = 10'

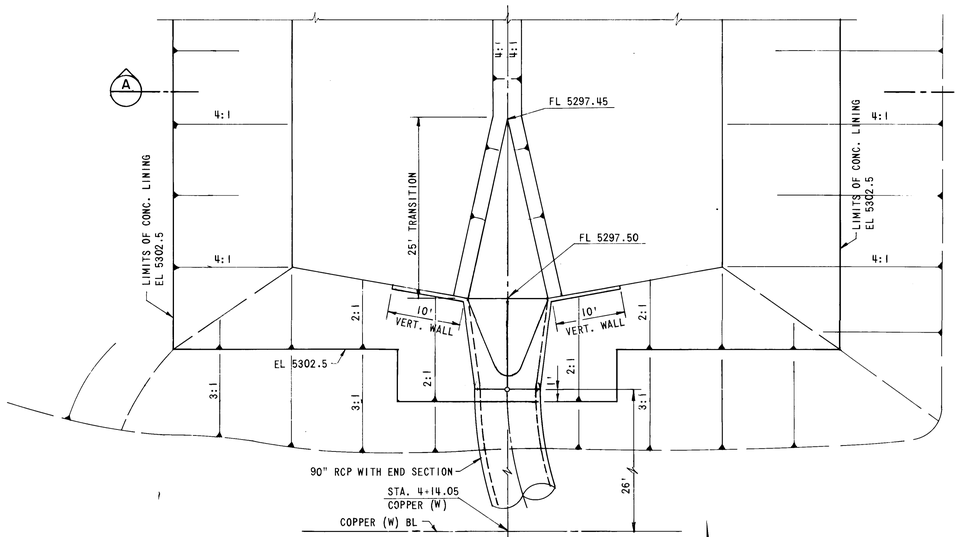

OUTFLOW PIPE DETAIL - COPPER (E)

1" = 10'

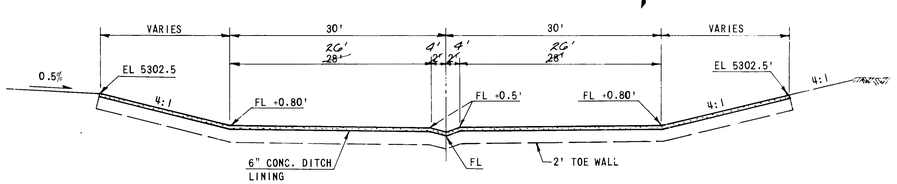

SECTION (A)

1" = 10'

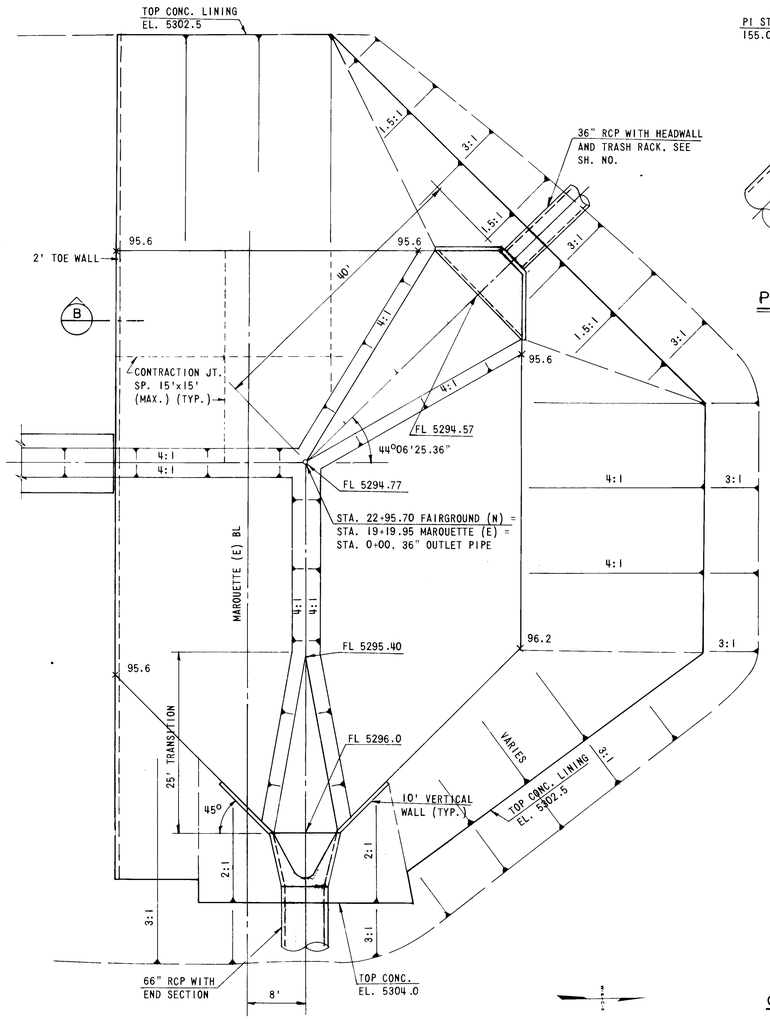

OUTFLOW PIPE DETAIL - MARQUETTE (E)

1" = 10'

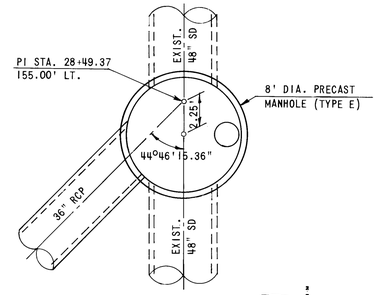

PRECAST MANHOLE DETAIL

1" = 10'

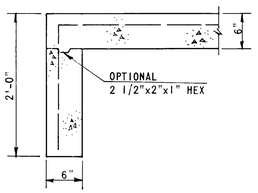

SECTION (B)

TOEWALL

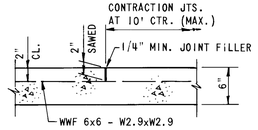

CONTRACTION JOINT

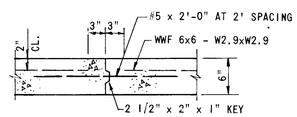

CONSTRUCTION & LONGITUDINAL JOINT

JOINT DETAILS

1" = 1'

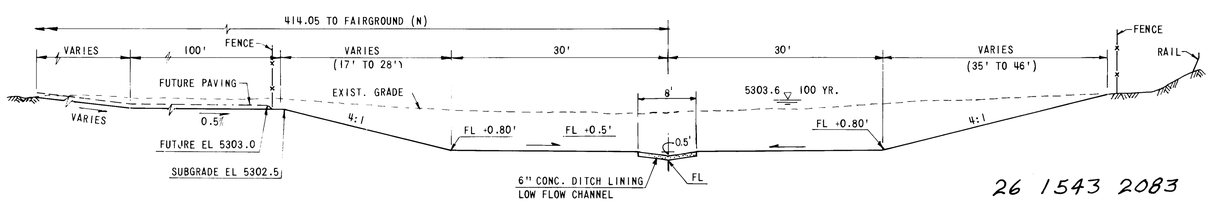

TYPICAL CHANNEL SECTION

1" = 10'

26 1543 2083

GENERAL NOTES:

1. LONGITUDINAL JOINTS MAY BE CONSTRUCTED AT THE OPTION OF THE CONTRACTOR WITH THE APPROVAL OF THE ENGINEER.
2. PLACE 1" EXPANSION JOINT MATERIAL AROUND ANY OBSTRUCTION OCCURRING WITHIN THE LIMITS OF THE CONCRETE DITCH LINING SUCH AS END SECTIONS, WINGWALLS, ETC.
3. ALL EMBANKMENT ON WHICH CONCRETE LINING IS TO BE PLACED SHALL BE COMPACTED TO 90% MAXIMUM DENSITY (ASTM D 1557).
4. CONTRACTION JOINT LENGTH TO WIDTH RATIO SHALL NOT EXCEED 1.5.

8-9-83

AS BUILT INFORMATION

CONTRACTOR | DATE
WORK STAKED BY | DATE
INSPECTOR'S ACCEPTANCE BY | DATE
VERIFIED BY | DATE
DRAWINGS CORRECTED BY | DATE

MICRO-FILM INFORMATION

RECORDED BY | DATE
NO.

BENCH MARKS

REFERENCES

MAP NO. 41 E 19

ROBERT E. WILSON NEW MEXICO 4591 REGISTERED PROFESSIONAL ENGINEER

NO.	DATE	REMARKS	BY

REVISIONS

DESIGN

DESIGNED BY: WILSON & CO., ENG. DATE 6/82
DRAWN BY: RAL DATE 6/82
CHECKED BY: SJM DATE 6/82

CITY OF ALBUQUERQUE
MUNICIPAL DEVELOPMENT DEPARTMENT

FAIRGROUNDS STORM WATER RELIEF SYSTEM PHASE I

MISCELLANEOUS DETAILS

APPROVALS	ENGINEER	DATE	APPROVALS	ENGINEER	DATE
City Engineer			Traffic		
Liquid Waste			Water		
A.C.E. - Design			154.3	SHEET 20 OF 42	
A.C.E. - Hydrology					

81-507

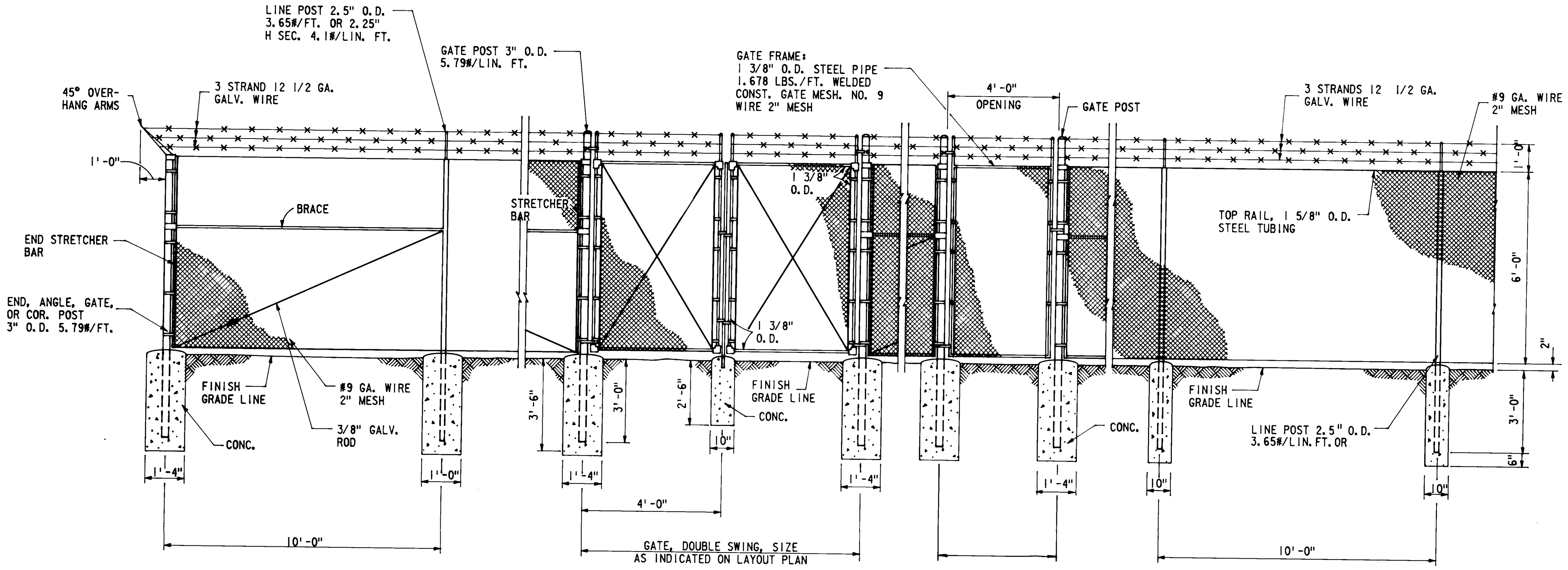

CORNER PANEL — DOUBLE GATE — ACCESS GATE — INTERIOR PANEL

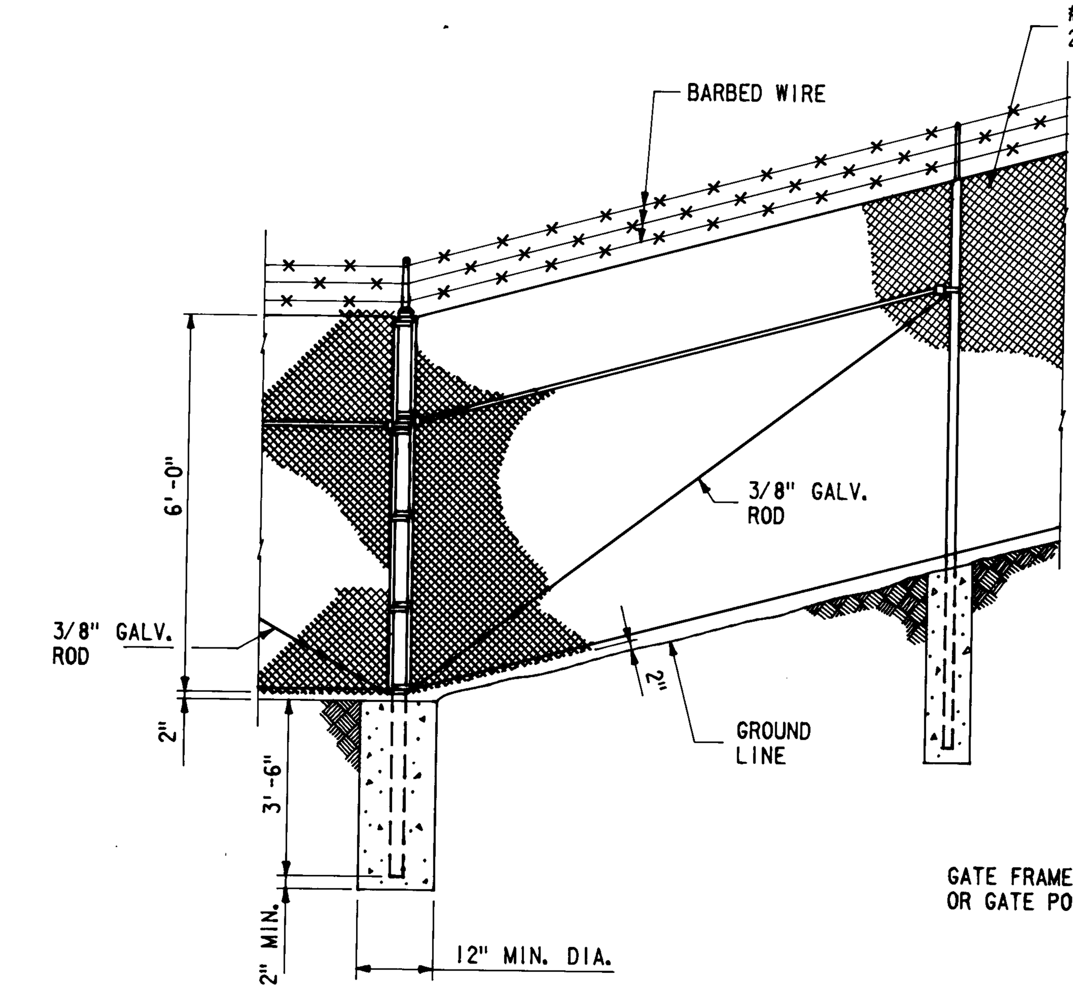

TYPICAL FENCE ON SLOPE
NOT TO SCALE

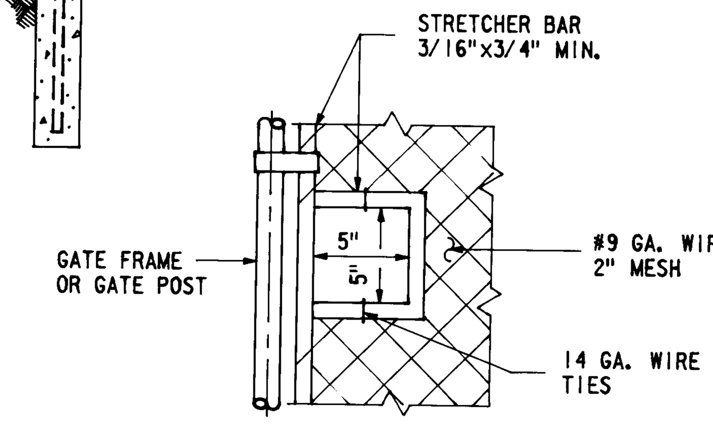

DETAIL OF CUT-OUT OF CHAIN AND LOCK
NOT TO SCALE

CHAIN LINK FENCE DETAILS
NOT TO SCALE

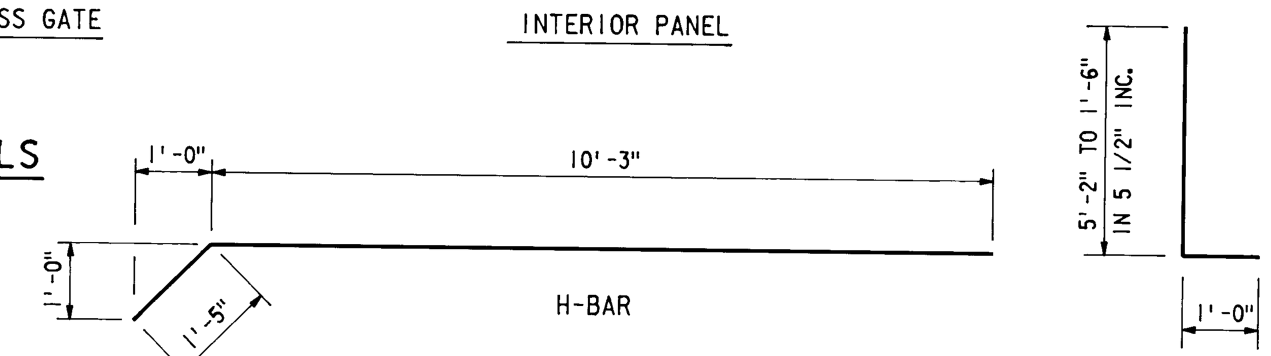

BENDING DIAGRAMS
1/2" = 1'-0"

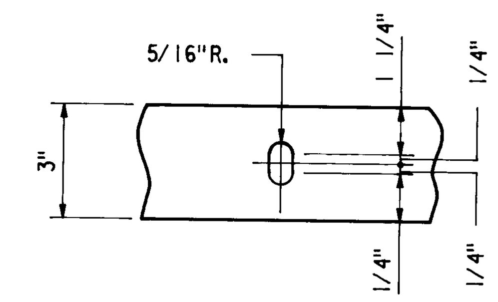

SLOTTED HOLE FOR REMOVABLE PORTION
3" = 1'-0"

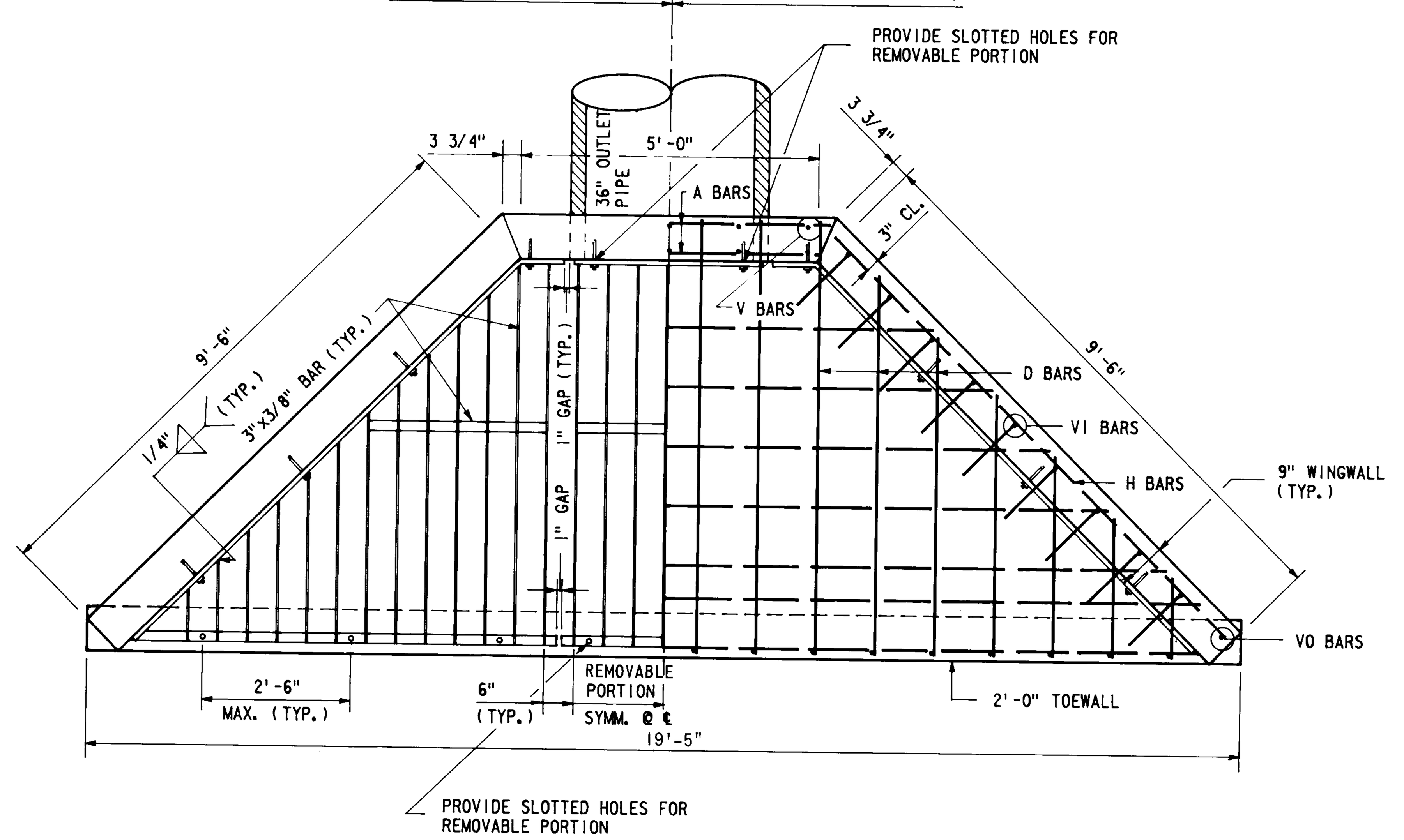

SHOWING TRASH RACK — PLAN — SHOWING REINFORCING

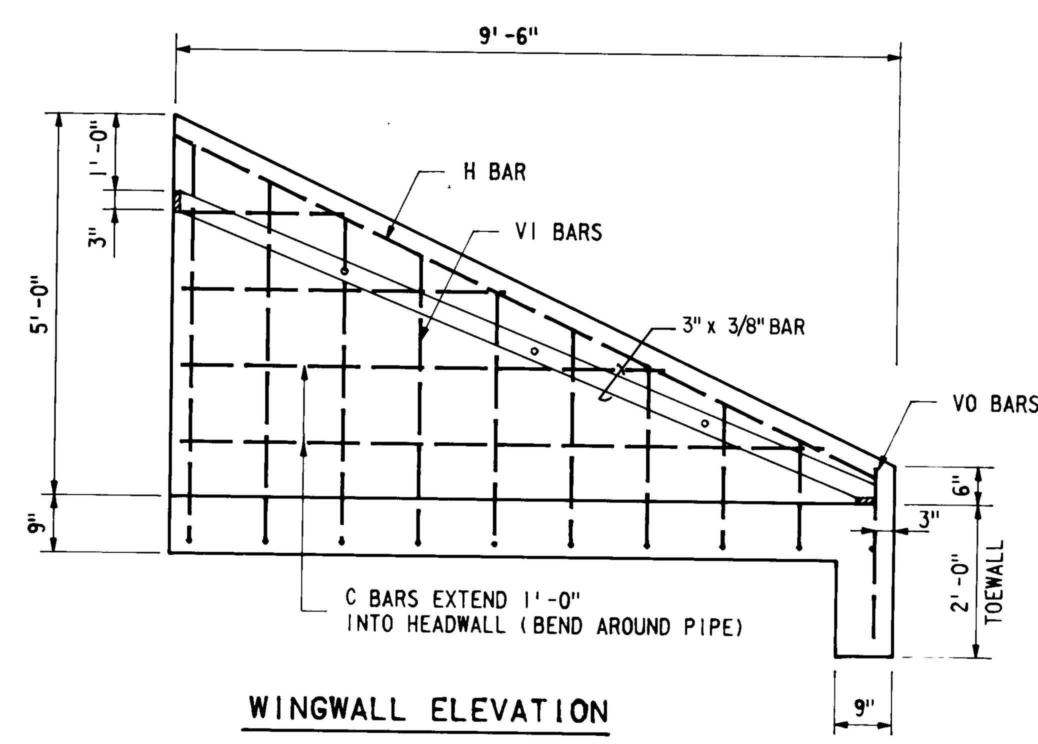

WINGWALL ELEVATION

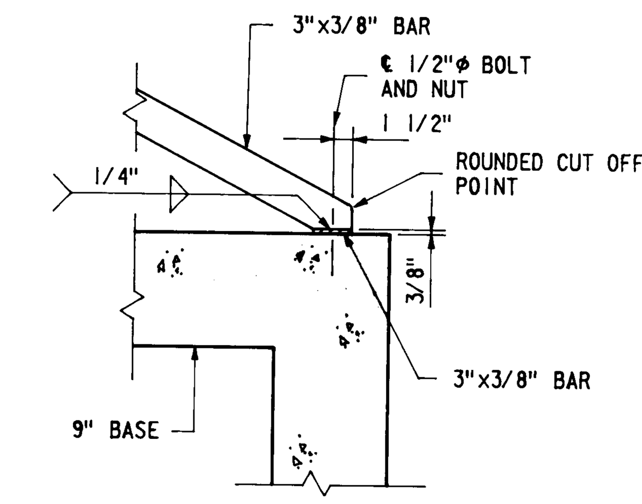

TYPICAL BASE CONNECTION
1" = 1'-0"

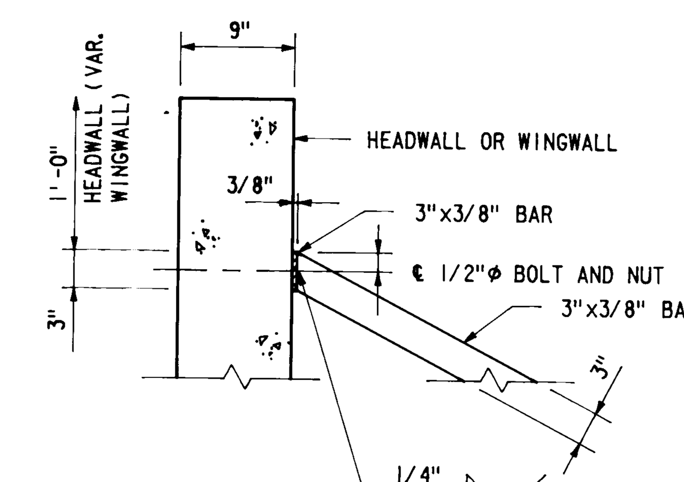

TYPICAL HEADWALL AND WINGWALL CONNECTION
1" = 1'-0"

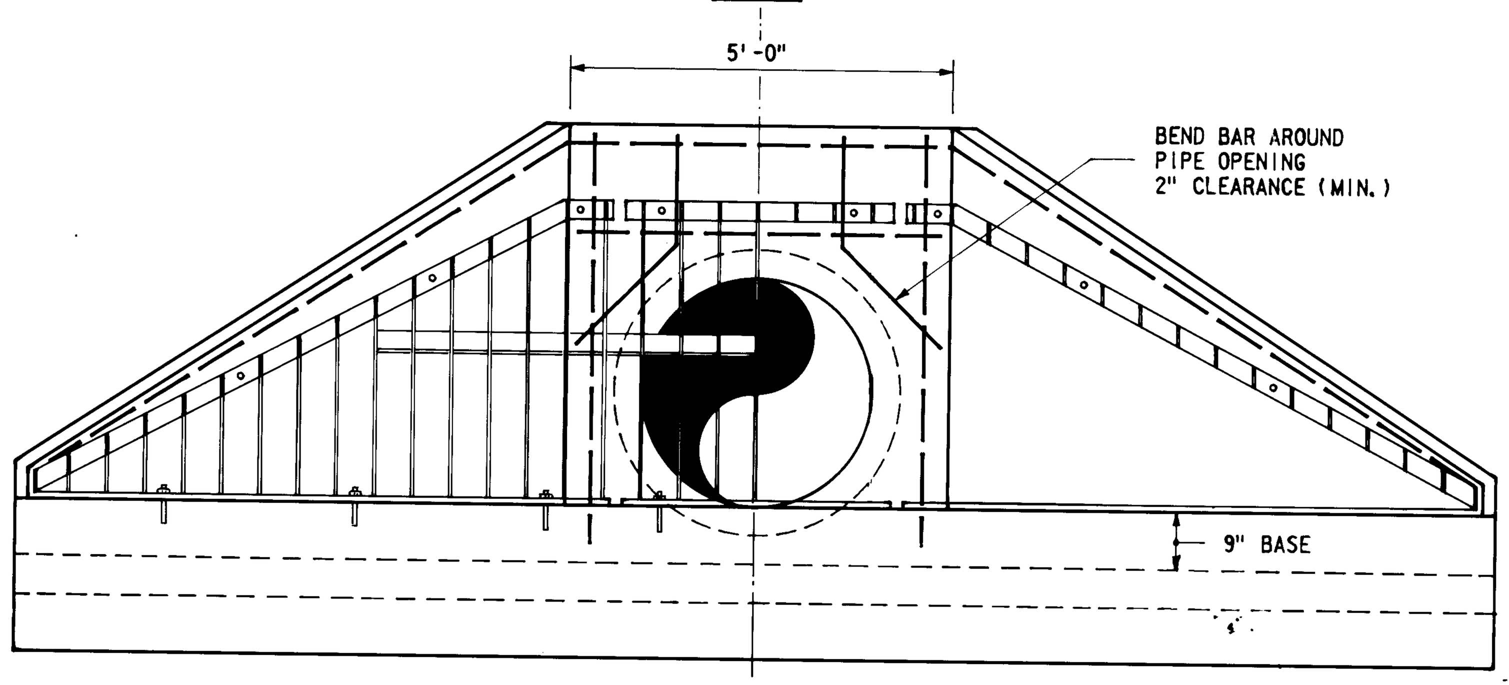

ELEVATION

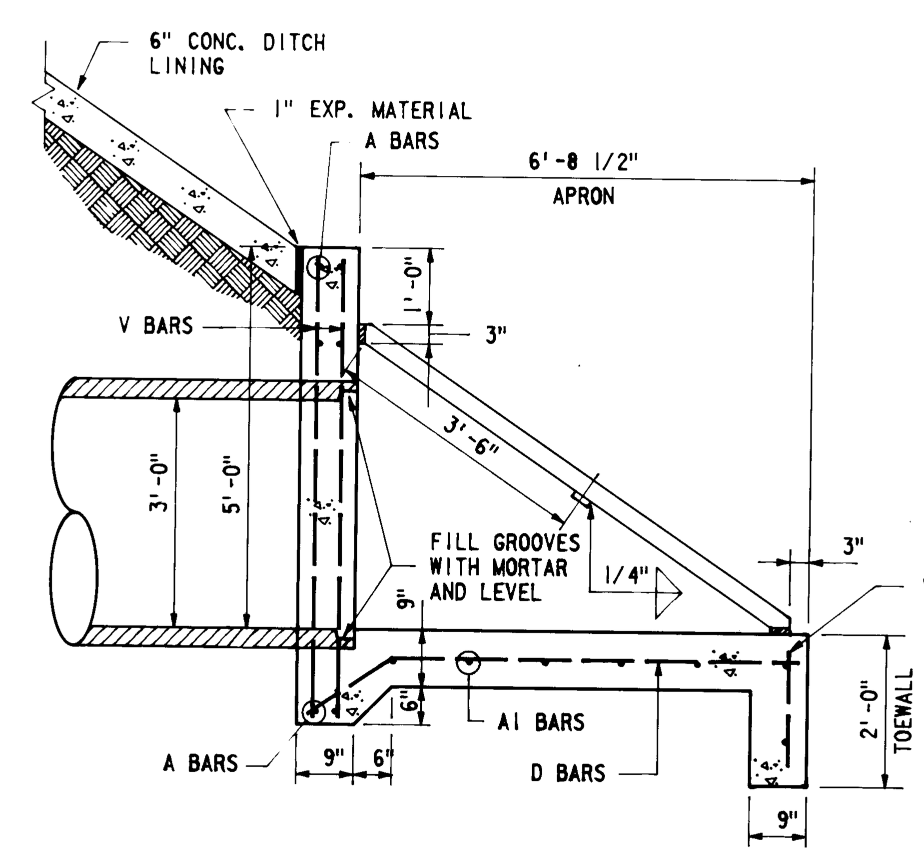

CONCRETE HEADWALL
1/2 = 1'-0"

SECTION

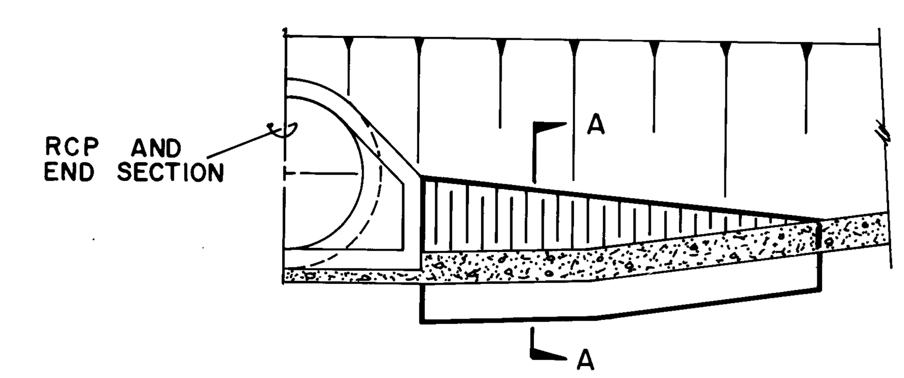

VERTICAL CONCRETE WALL

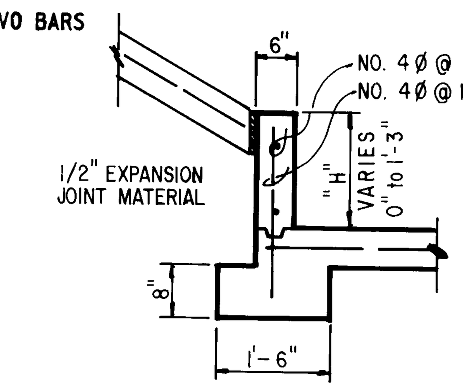

SECTION A-A

NOTES

1. ALL REINFORCING BARS ARE #4'S @ 12".
2. MINIMUM CLEARANCE BETWEEN REINFORCING STEEL AND EXPOSED CONCRETE SURFACE SHALL BE 2".
3. CONCRETE REINFORCING STEEL AND STRUCTURAL STEEEL SHALL BE OF CLASS AND GRADE AS SPECIFIED IN THE SPECIFICATIONS.
4. DEVELOPMENT LENGTHS FOR SPLICES SHALL BE 1'-0" MINIMUM.
5. ALL STEEL FOR TRASHRACK SHALL BE 3"x3/8" BARS AND ALL BOLTS SHALL B 1/2"φ x 7" BOLT AND NUT WITH 5" IMBEDMENT ON REMOVABLE PORTION OF RACK. USE STAINLESS STEEL BOLTS AND NUTS. GALVANIZE ALL EXPOSED FERROUS PARTS AFTER FABRICATION.

AS BUILT INFORMATION: CONTRACTOR / WORK STAKED BY / INSPECTOR'S ACCEPTANCE BY / FIELD VERIFICATION BY / DRAWINGS CORRECTED BY — DATE

MICRO-FILM INFORMATION: RECORDED BY / NO. — DATE

BENCH MARKS

REFERENCES: MAP NO. K-15-Z

ROBERT F. SYKES — NEW MEXICO — 4591 — REGISTERED PROFESSIONAL ENGINEER

NO.	DATE	REVISIONS REMARKS	BY

DESIGN: DESIGNED BY: WILSON & CO., ENG. DATE: 6/82 — DRAWN BY: KWD DATE: 6/82 — CHECKED BY: SJM DATE: 6/82

CITY OF ALBUQUERQUE
MUNICIPAL DEVELOPMENT DEPARTMENT

FAIRGROUNDS STORM WATER RELIEF SYSTEM PHASE I

MISCELLANEOUS DETAILS

APPROVALS	ENGINEER	DATE	APPROVALS	ENGINEER	DATE
City Engineer			Traffic		
Liquid Waste			Water		
A.C.E.-Design			1543	SHEET 21 OF 42	
A.C.E.-Hydrology					

26 1543 2183

8-9-83

WILSON & COMPANY

05I:[150.15]8150752 .DGN BORDER D

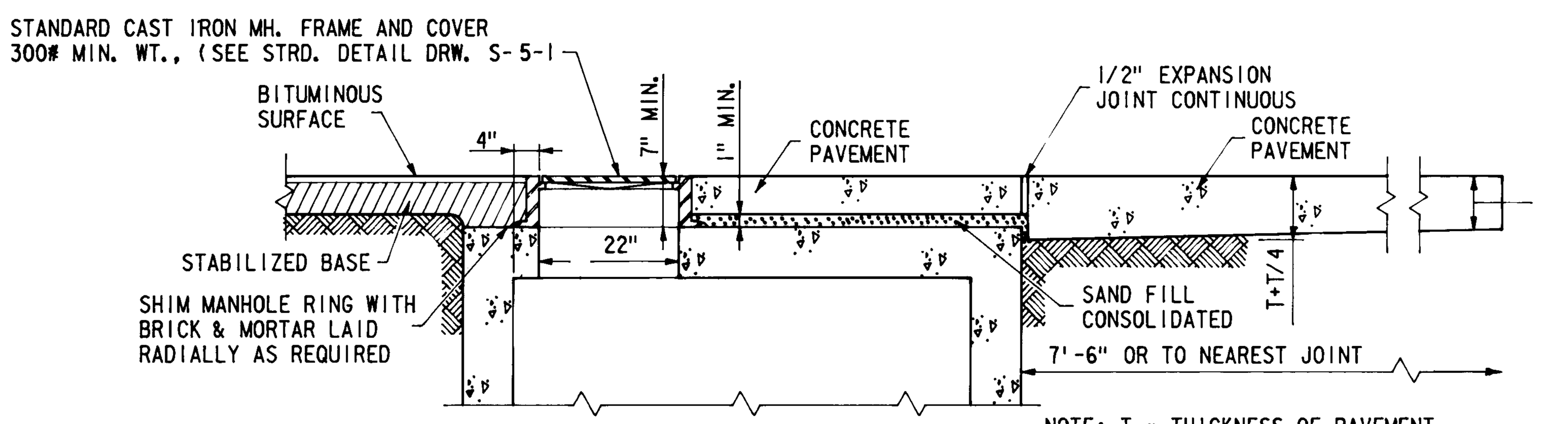

PAVED STREETS
(TYPE 1)

MANHOLE RING & COVER INSTALLATIONS
1/2" = 1'-0"

NOTE:
ORIENT MANHOLE RING & COVER & STEPS ON SIDE WITH NO PIPE OR SMALLEST DIA. PIPE.

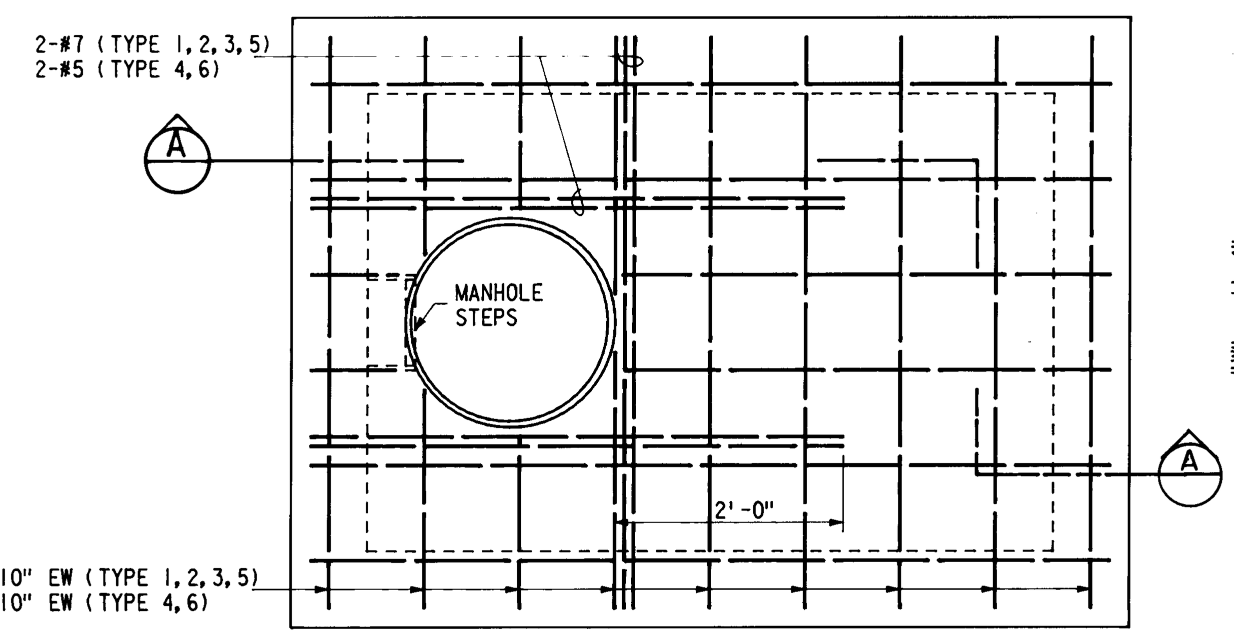

PLAN MANHOLE

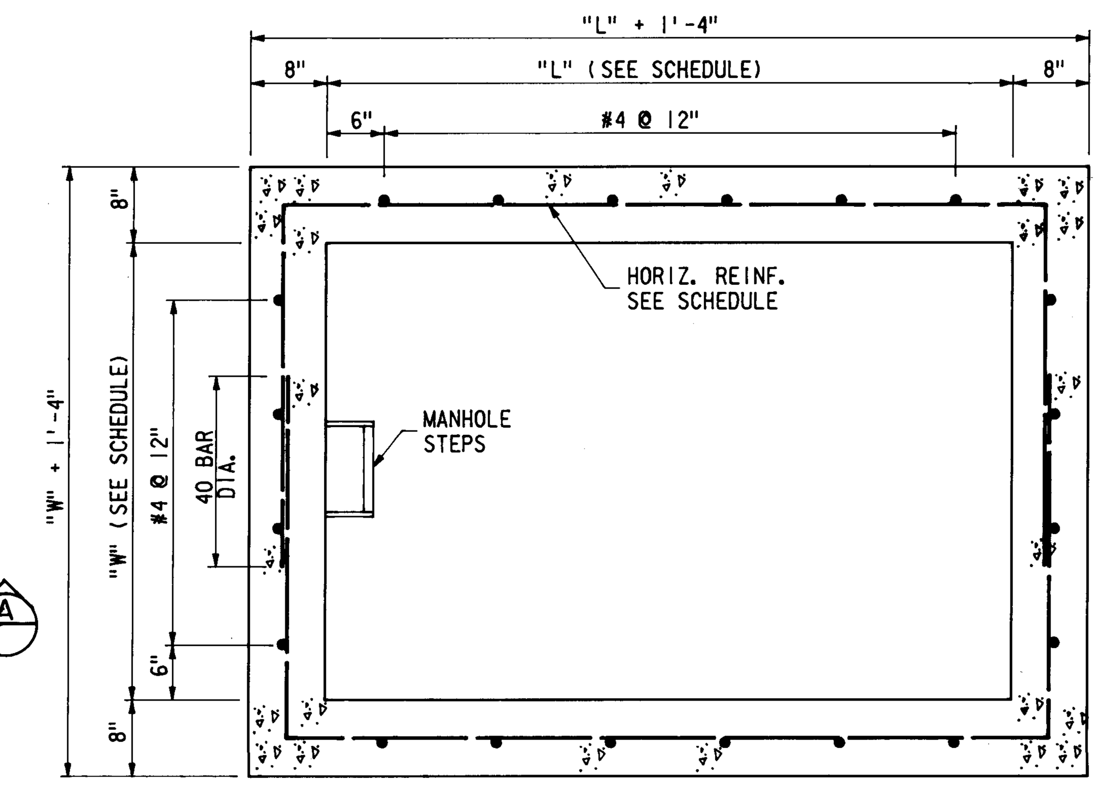

SECTION B

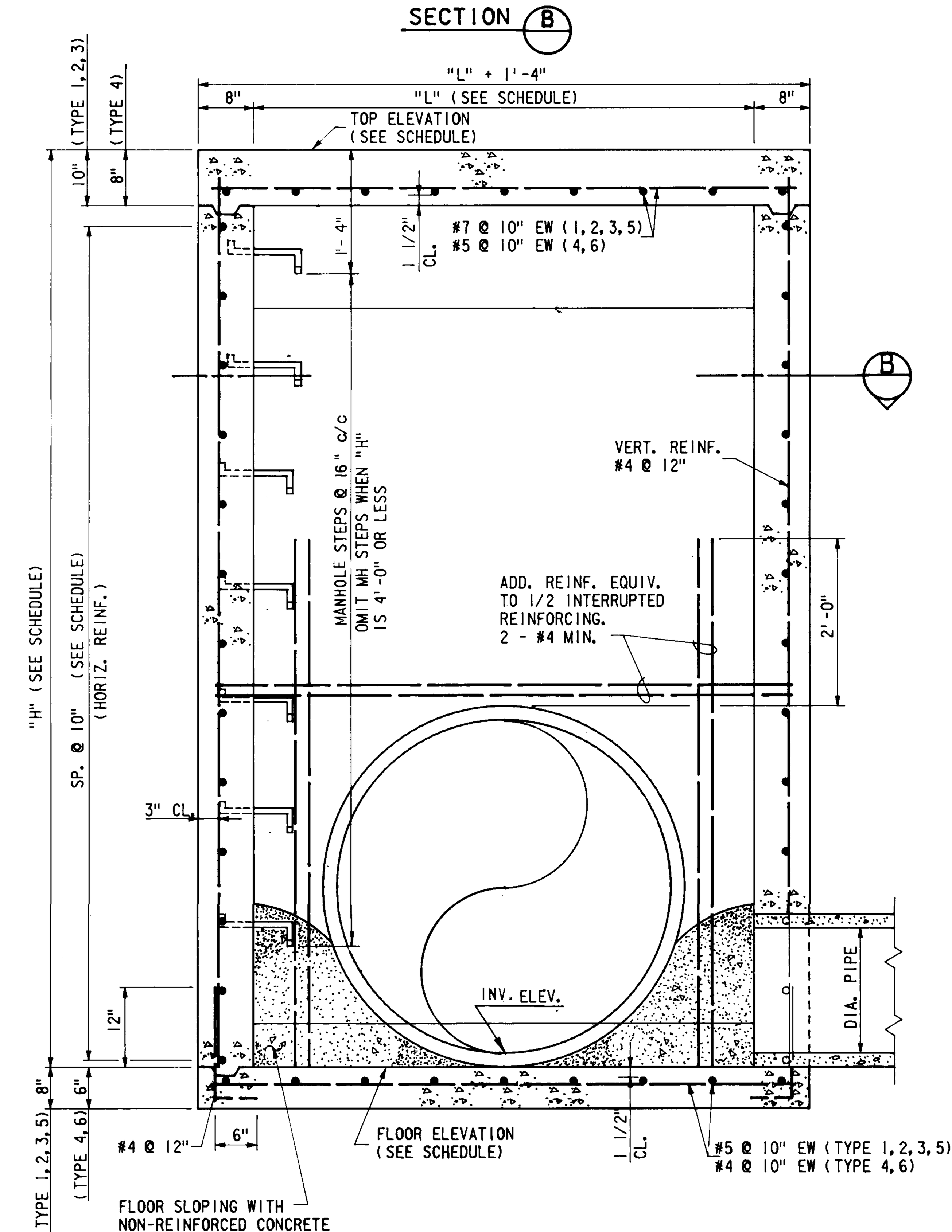

SECTION A

MANHOLE
3/4" = 1'-0"

MANHOLE SCHEDULE

SPECIAL MANHOLE TYPE 1								OUTFLOW PIPES				INFLOW PIPES					
LOCATION	MANHOLE TYPE	TOP OF MANHOLE RING	TOP OF MANHOLE	FLOOR OF MANHOLE	H	W	L	SIZE & DIRECTION	INV. EL.	SIZE & DIRECTION	INV. EL.	SIZE & DIRECTION	INV. EL.	SIZE & DIRECTION	INV. EL.	SIZE & DIRECTION	INV. EL.
MARQUETTE AVE. (WEST) STA. 16+67 RT.	1	5307.6	5307.0	5297.5	10.5'	8'	8'	66" (W)	5297.01			54" (E)	5300.8	48" (N)	5299.0	48" (S)	5298.8
CHAMA STREET (NORTH) STA. 26+27.7, 24' RT.	1	5315.0	5314.4	5306.15	8.25'	8'	8'	54" (W)	5306.6			42" (E)	5307.6	42" (N)	5307.6	48" (S)	5307.1
CHAMA STREET (NORTH) STA. 26+44.5, 24' RT.	1	5315.15	5314.57	5307.82	6.75'	6'	6'	42" (W) EXIST.	5308.35	42" (S)	5308.55	42" (E) EXIST.	5308.35	42" (N)	5308.55		

GENERAL NOTES

1. DESIGN STRESSES
   CONCRETE f'c = 3000 PSI
   REINFORCING fy = 60,000 PSI
2. DESIGN LOADS
   TOP SLAB (TYPE 1,2,3,5) AASHTO-H20
   TOP SLAB (4,6) LIVE LOAD 100 PSF
   WALLS EARTH 40 PCF
   WATER 62.5 PCF
3. LAP HORIZONTAL BARS IN SHORT WALL.
4. PRECAST CONCRETE MANHOLES MAY BE USED AT THE CONTRACTORS OPTION WITH APPROVAL OF THE ENGINEER.

HORIZONTAL WALL STEEL SCHEDULE

"H"	"L" OR "W" 3'	4'	5'	6'	7'	8'
6'					#4 @ 10"	#4 @ 10"
7'	#4 @ 10"	#4 @ 10"	#4 @ 10"	#4 @ 10"		
8'						
9'					#5 @ 10"	#5 @ 10"
10'				#5 @ 10"		
11'			#5 @ 10"			
12'	#5 @ 10"	#5 @ 10"				
13'						
14'			#6 @ 10"	#6 @ 10"	#6 @ 10"	#6 @ 10"
15'						
16'						

26 1543 2283

8-9-83

CITY OF ALBUQUERQUE
MUNICIPAL DEVELOPMENT DEPARTMENT

FAIRGROUNDS STORM WATER RELIEF SYSTEM PHASE I

SPECIAL MANHOLE TYPE I

APPROVALS	ENGINEER	DATE	APPROVALS	ENGINEER	DATE
City Engineer			Traffic		
Liquid Waste			Water		
A.C.E.-Design			1543	SHEET 22 OF 42	
A.C.E.-Hydrology					

WILSON & COMPANY ENGINEERS ARCHITECTS

81-507

AS BUILT INFORMATION
CONTRACTOR
WORK STAKED BY
INSPECTOR'S ACCEPTANCE BY
FIELD VERIFICATION BY
DRAWINGS CORRECTED BY
DATE
DATE
DATE
DATE

MICRO-FILM INFORMATION
RECORDED BY
NO.
DATE

BENCH MARKS

REFERENCES
MAP NO. K-18

ROBERT F. SYKES NEW MEXICO 4591 REGISTERED PROFESSIONAL ENGINEER

NO.	DATE	REVISIONS REMARKS	BY

DESIGN
DESIGNED BY: WILSON & CO., ENG. DATE: 6/82
DRAWN BY: KWD DATE: 6/82
CHECKED BY: MLB DATE: 6/82

QSI:[50,15]81507S4 .DGN BORDER D

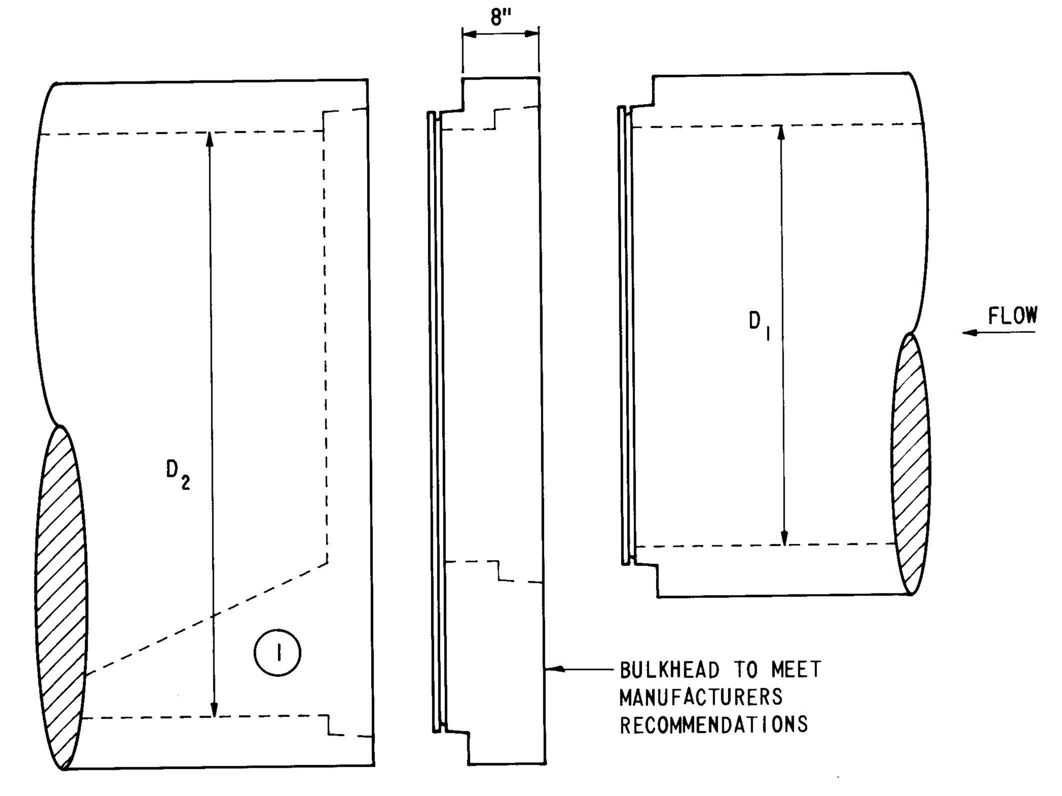

DETAIL OF EXPANSION BULKHEAD

NOT TO SCALE

(1) FIELD PLACED NON-REINFORCED CONCRETE TO TAPER AT 2:1 SLOPE FROM INVERT OF D_1 TO INVERT OF D_2.

D_1 = DIAMETER OF UPSTREAM PIPE (SEE PLAN SHEET AND SCHEDULE).

D_2 = DIAMETER OF DOWNSTREAM PIPE (SEE PLAN SHEET AND SCHEDULE).

EXPANSION BULKHEAD SCHEDULE

LOCATION	D_1	D_2
COPPER AVE. (WEST) STA. 10+10	84"	90"
ALCAZAR ST. (SOUTH) STA. 25+38	66"	84"

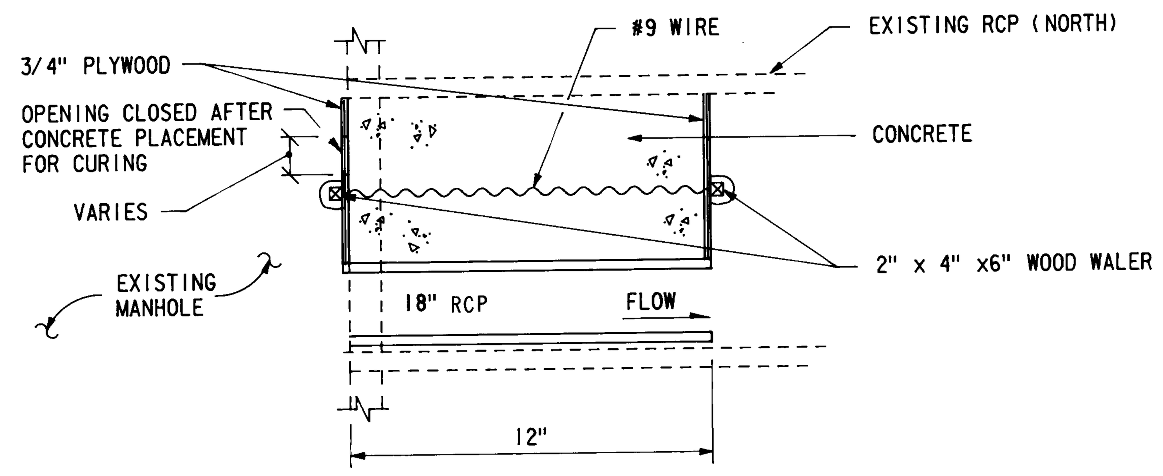

PARTIAL PLUG
STA. 16+67, 27' RT.
MARQUETTE AVE. (WEST)

NOT TO SCALE

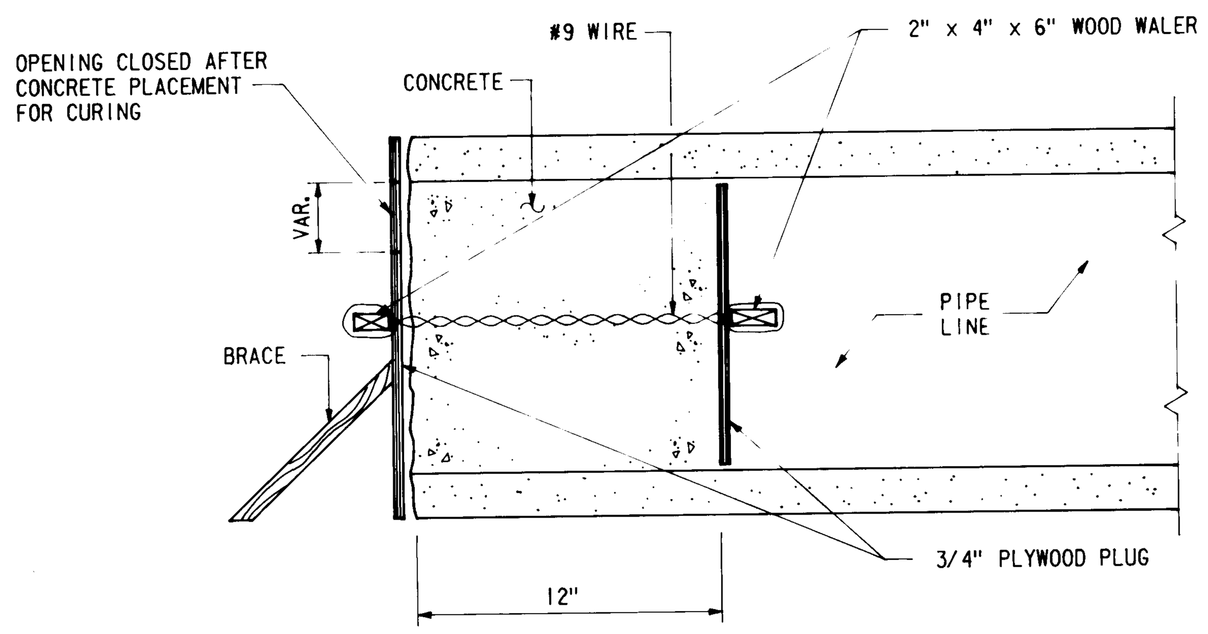

TYPICAL PIPE PLUG

NOT TO SCALE

NOTE: USE ON ALL LINES OF 12" DIAMETER OR LARGER. PRECAST CONCRETE PLUGS MAY BE USED IN LIEU OF CAST IN PLACE. PRECAST PLUGS SHALL BE IN ACCORANCE WITH PIPE MANUFACTURERS RECOMMENDATION.

D	L	T
12"	1.0'	4"
18"	1.0'	5"
24"	1.0'	6"
36"	1.5'	8"
48"	1.5'	10"

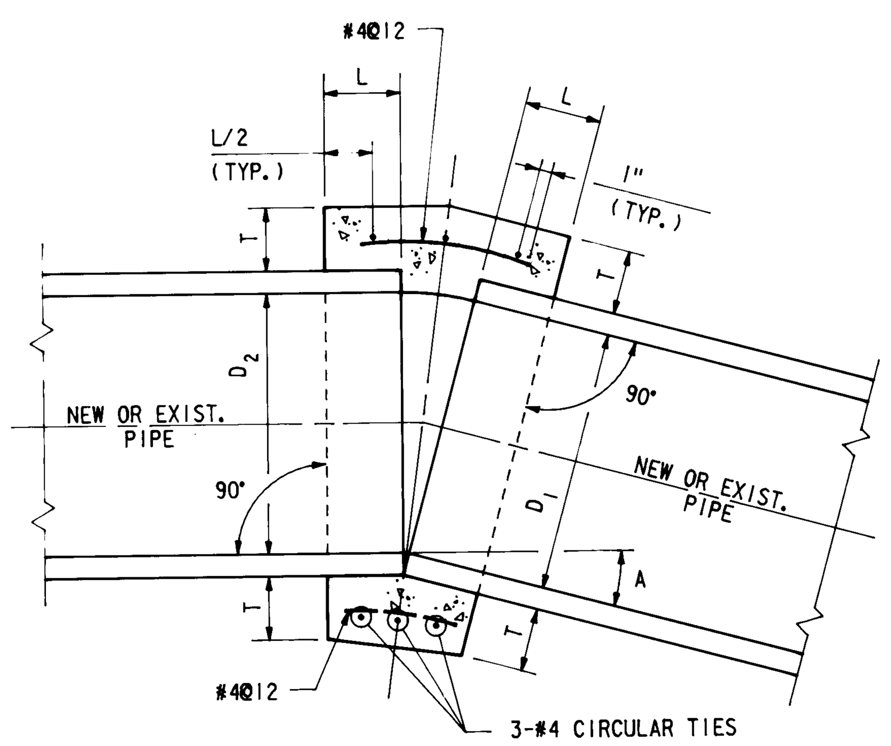

CONCRETE COLLAR FOR STORM SEWER

NOT TO SCALE

NOTES

1. A CONCRETE COLLAR IS REQUIRED WHERE THE CHANGE IN GRADE EXCEEDS 0.10 FT. PER FOOT.
2. WHERE PIPES OF DIFFERENT DIAMETERS ARE JOINED WITH A CONCRETE COLLAR, L AND T SHALL BE THOSE OF LARGER PIPE. D = D_1 OR D_2 WHICHEVER IS GREATER.
3. OMIT REINFORCING ON PIPES 24" AND LESS IN DIAMETER AND ON ALL PIPES WHERE ANGLE A IS LESS THAN 10°.
4. WHERE REINFORCING IS REQUIRED THE DIAMETER OF THE CICULAR TIES SHALL BE D+(2 x WALL THICKNESS)+8".
5. WHEN D_1 IS EQUAL TO OR LESS THAN D_2, JOIN INVERTS AND WHEN D_1 IS GREATER THAN D_2, JOIN SOFFITS.
6. PIPE MAY BE CORRUGATED METAL PIPE, CONCRETE PIPE, OR REINFORCED CONCRETE PIPE.
7. A CONCRETE COLLAR MAY BE USED FOR ALIGNMENT CHANGES ON CONNECTOR PIPES TO CATCH BASINS.

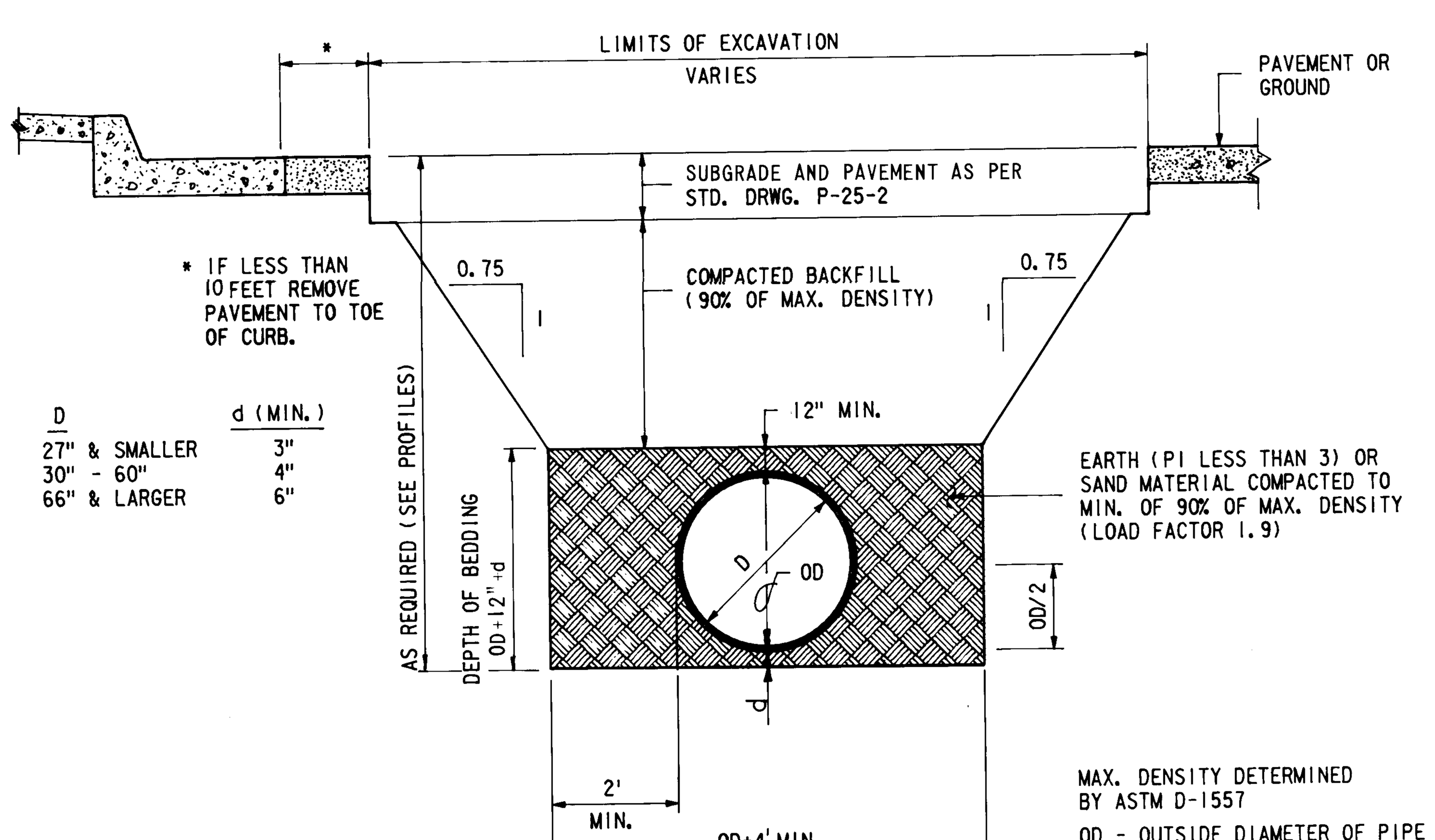

D	d (MIN.)
27" & SMALLER	3"
30" - 60"	4"
66" & LARGER	6"

MAX. DENSITY DETERMINED BY ASTM D-1557

OD - OUTSIDE DIAMETER OF PIPE

D - PIPE DIAMETER

PI - PLASTICITY INDEX

TYPICAL TRENCH EXCAVATION AND BEDDING

NOT TO SCALE

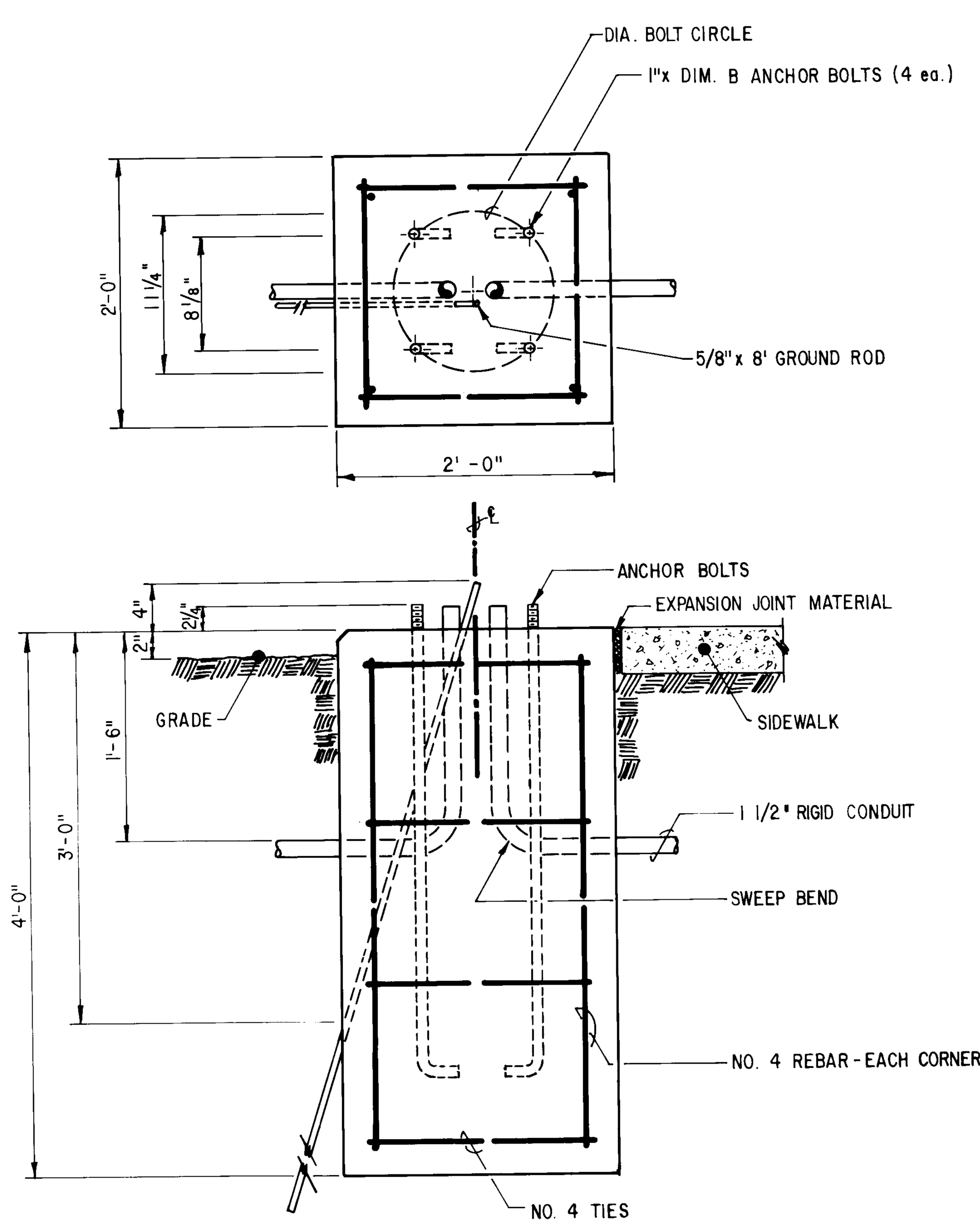

FOUNDATION DETAIL-ARTERIAL STREET LIGHT

NOT TO SCALE

INSTALLATION TYPE	A	B
Underground/Overhead up to 5° angle	3'-6"	3'
Overhead 5° to 25° angle	5'-6"	5'

NOTE
When foundation is not within sidewalk then the top of foundation should be 2" above grade with 3/4" chamfered edges.

8-9-83

26 1543 2383

CITY OF ALBUQUERQUE
MUNICIPAL DEVELOPMENT DEPARTMENT

STORM SEWER
MISCELLANEOUS DETAILS

APPROVALS	ENGINEER	DATE	APPROVALS	ENGINEER	DATE
City Engineer			Traffic		
Liquid Waste			Water		
A.C.E.-Design			1543	SHEET 23 OF 42	
A.C.E.-Hydrology					

WILSON & COMPANY ENGINEERS ARCHITECTS

81-507

AS BUILT INFORMATION: CONTRACTOR / WORK STAKED BY / INSPECTOR'S ACCEPTANCE BY / FIELD VERIFICATION BY / DRAWINGS CORRECTED BY — DATE

MICRO-FILM INFORMATION: RECORDED BY / NO. — DATE

BENCH MARKS

REFERENCES: MAP NO.

ROBERT F. SYKES — NEW MEXICO — 4591 — REGISTERED PROFESSIONAL ENGINEER

REVISIONS: NO. / DATE / REMARKS / BY

DESIGN: DESIGNED BY: WILSON & CO., ENG. DATE: 6/82; DRAWN BY: KWD DATE: 6/82; CHECKED BY: MLB DATE: 6/82

051:[150,151]81507S3 .DGN BORDER D

N.M. STATE FAIRGROUNDS

LOUISIANA BLVD.

ALCAZAR ST.

COPPER AVE. NE

* FOR STORM SEWER PLACEMENT SEE SHEET NO. 3

(1) 1-20"×8" Welded Neck Flange ~~Tapping Sleeve~~
(1) 1-8" Tapping Valve
(1) 1-Type "A" Valve Box

(R) & (C) Std. Arterial Pvm't.

75' Transition

(1) 308 L.F. 8" Water Pipe

Sta 10+00 Copper Ave. (w)=
Sta 10+00 Alcazar St. (S) &
Sta 10+00 Copper Ave. (E)

TC 17.50
5' Lt. Meet
Meet ℄

TC 17.52
Base Line

TC 17.62
25' Rt.

(1) 1" Service Connection
See Landscape Sec.

(R) & (C) 60 L.F.
Std. C & G

TC 17.74
5.5' Rt.
Meet Ex. ℄

RETURN
Δ = 89°-54'
R = 25.00'
T = 24.971
L = 39.281

~~(R) Exist. MH~~
~~(C) 4' Dia Type "E" MH~~
(R) 1750 L.F. San. Sewer
(C) 1750 L.F. 8" San. Sewer
~~Connect to New MH~~
Connect to Existing San. Sewer

Ex. Ch. Lnk. Fence

(R) & (C) Std. Residential Pvm't.

(R) & (C) Std. C & G
& 48" Sidewalk

Ex. Ch. Lnk. Fence

Ex. 36" S/W

Ex. 36" Drive Strips

24" Dia.

20" Dia.

36' F.F.

32' F.F.

8111.2

8186.2

7'-6"

R/W

20'-51' W

24" Stm. S.

8" CP

4"-51' W

2"G

CB

Stm MH

San MH

St. Lt. Wd.

W. & C. I.

0 20 40 60 80
SCALE IN FEET

5325
5320
5315
5310
5305

Top of Curb Rt.

8" Water Line

Existing MH Remained

EC 19.16
Meet Existing ℄

MC 19.58

Sta. 7+55.4 Rt. 19.61

100' VC

MO = -0.03

Sta. 8+50
PT = 5320.85
MC = 5320.82

114.0' @ +1.08%
Rt. C&G

129.4' @ +0.84%
Rt. C&G

Sta. 9+79.4 Rt. 21.94
MEET EXISTING ℄

5 6 7 8 9 10

26 1543 2483

6-9-83

AS BUILT INFORMATION

CONTRACTOR		
WORK STAKED BY		DATE
INSPECTOR'S ACCEPTANCE BY		DATE
FIELD VERIFICATION BY		DATE
DRAWING CORRECTED BY		DATE

MICRO-FILM INFORMATION

RECORDED BY	DATE
NO.	

BENCH MARKS

9-K19 AT THE INTERSECTION OF LOUISIANA BLVD. & COPPER AVE. N.E.
A SQUARE □ CHISELED ON TOP OF CONCRETE CURB AT THE N.W.E.
RETURN ELEV. 5318.738

REFERENCES

MAP NO. K-18 & K-19

ROGER F. SYKES
NEW MEXICO
4591
REGISTERED PROFESSIONAL ENGINEER

NO.	DATE	REMARKS	BY
1	6-8-83	Revised Water Line Location	VER

REVISIONS

DESIGN

DESIGNED BY: WILSON & CO., ENG. DATE:
DRAWN BY: DATE:
CHECKED BY: DATE:

CITY OF ALBUQUERQUE
MUNICIPAL DEVELOPMENT DEPARTMENT

COPPER AVE.

CURB & GUTTER REPLACEMENT
SANITARY SEWER REPLACEMENT
& PAVEMENT REPLACEMENT

APPROVALS	ENGINEER	DATE	APPROVALS	ENGINEER	DATE
City Engineer			Traffic		
Liquid Waste			Water		
A.C.E. - Design			1543	SHEET 24 OF 42	
A.C.E. - Hydrology					

81-507

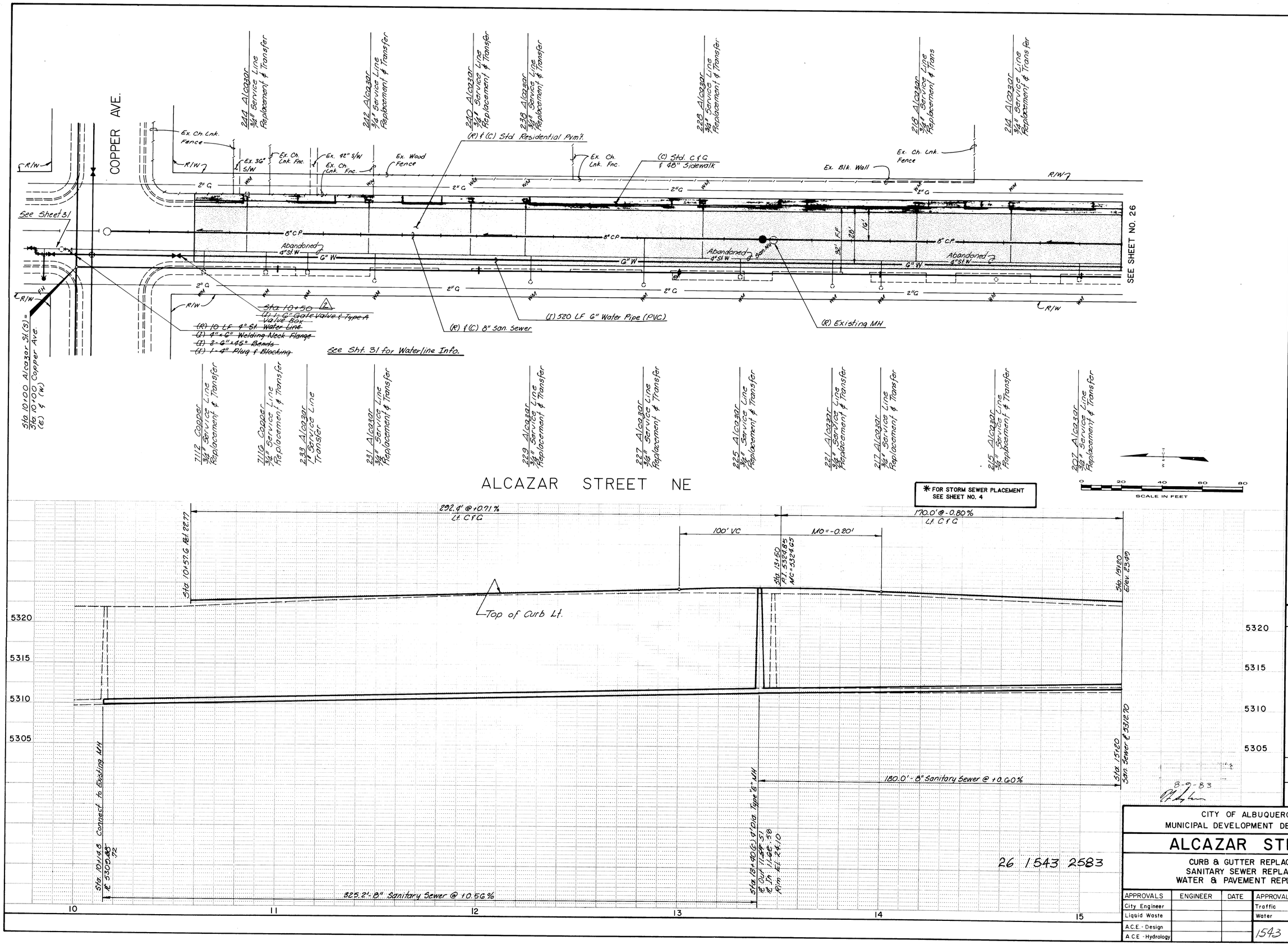

AS BUILT INFORMATION

		DATE
CONTRACTOR		
WORK STAKED BY		DATE
INSPECTOR'S ACCEPTANCE BY		DATE
VERIFICATION BY		DATE
DRAWINGS CORRECTED BY		DATE

MICRO-FILM INFORMATION

RECORDED BY	DATE
NO.	

BENCH MARKS

SQUARE □ CHISELED ON TOP OF CONCRETE CURB AT STA. 13+00
BASE LINE (RT.) ELEV. 5324.06

REFERENCES

MAP NO. K-19

ROBERT E. SYKES NEW MEXICO 4591 REGISTERED PROFESSIONAL ENGINEER

NO.	DATE	REMARKS	BY
2	1/4/83	Revised Waterline Location	VER

REVISIONS

DESIGN

DESIGNED BY: WILSON & CO., ENG. DATE:
DRAWN BY: DATE:
CHECKED BY: DATE:

CITY OF ALBUQUERQUE
MUNICIPAL DEVELOPMENT DEPARTMENT

ALCAZAR STREET

CURB & GUTTER REPLACEMENT
SANITARY SEWER REPLACEMENT
WATER & PAVEMENT REPLACEMENT

APPROVALS	ENGINEER	DATE	APPROVALS	ENGINEER	DATE
City Engineer			Traffic		
Liquid Waste			Water		
A.C.E. - Design			1543	SHEET 25 OF 42	
A.C.E. - Hydrology					

81-507

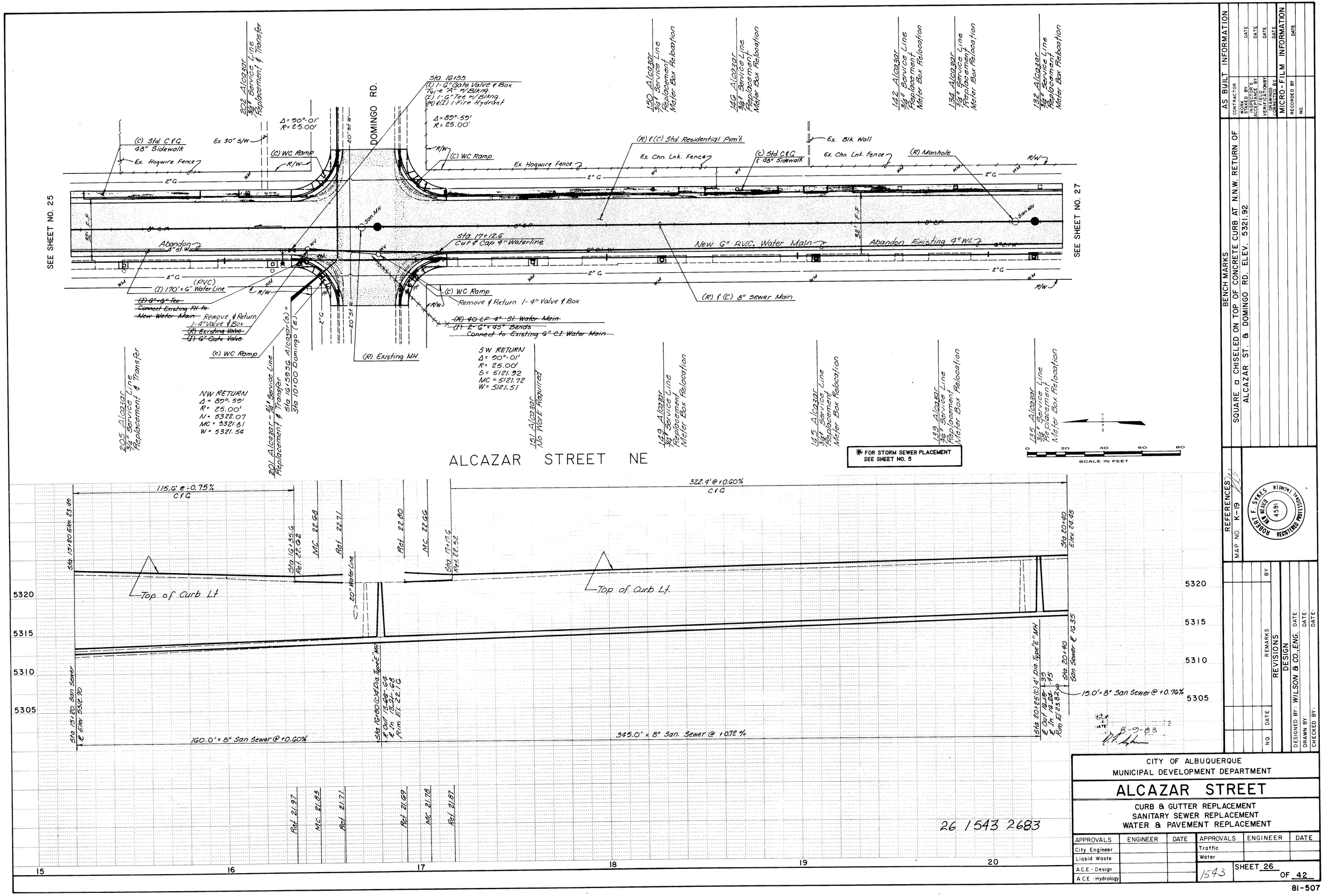

AS BUILT INFORMATION

CONTRACTOR — DATE
WORK STAKED BY — DATE
INSPECTOR'S ACCEPTANCE BY — DATE
FIELD VERIFICATION BY — DATE
DRAWINGS CORRECTED BY — DATE

MICRO-FILM INFORMATION
RECORDED BY — DATE
NO.

BENCH MARKS
SQUARE □ CHISELED ON TOP OF CONCRETE CURB AT N.W. RETURN OF ALCAZAR ST. & DOMINGO RD. ELEV. 5321.92

REFERENCES
MAP NO. K-19

ROBERT F. SYKES NEW MEXICO 4591 REGISTERED PROFESSIONAL ENGINEER

NO.	DATE	REMARKS	BY
		REVISIONS	

DESIGNED BY: WILSON & CO., ENG. DATE:
DRAWN BY: DATE:
CHECKED BY: DATE:

CITY OF ALBUQUERQUE
MUNICIPAL DEVELOPMENT DEPARTMENT

ALCAZAR STREET

CURB & GUTTER REPLACEMENT
SANITARY SEWER REPLACEMENT
WATER & PAVEMENT REPLACEMENT

APPROVALS	ENGINEER	DATE	APPROVALS	ENGINEER	DATE
City Engineer			Traffic		
Liquid Waste			Water		
A.C.E. - Design					
A.C.E. - Hydrology					

1543

SHEET 26 OF 42

81-507

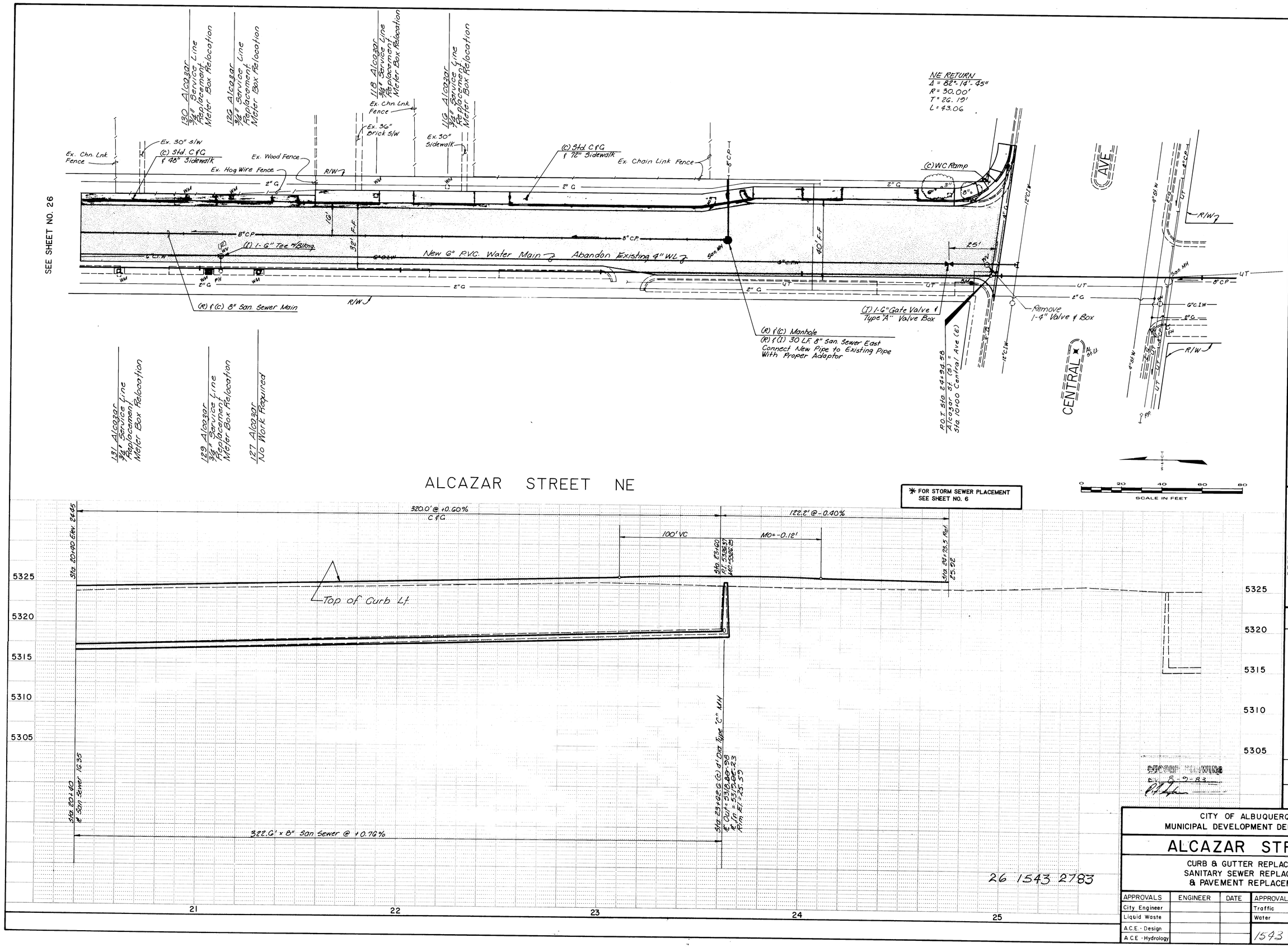

AS BUILT INFORMATION

CONTRACTOR
WORK STAKED BY — DATE
INSPECTOR'S ACCEPTANCE BY — DATE
FIELD VERIFICATION BY — DATE
DRAWINGS CORRECTED BY — DATE

MICRO-FILM INFORMATION
RECORDED BY — DATE
NO.

BENCH MARKS
SQUARE □ CHISELED ON TOP OF CONCRETE CURB AT N.W. RETURN OF ALCAZAR ST. & CENTRAL AVE. ELEV. 5324.87

REFERENCES
MAP NO. K-19

ROBERT F. SYKES NEW MEXICO 4591 REGISTERED PROFESSIONAL ENGINEER

NO.	DATE	REMARKS	BY

REVISIONS

DESIGN
DESIGNED BY: WILSON & CO., ENG. DATE:
DRAWN BY: DATE:
CHECKED BY: DATE:

FIELD DRAWING
8-9-83

CITY OF ALBUQUERQUE
MUNICIPAL DEVELOPMENT DEPARTMENT

ALCAZAR STREET

CURB & GUTTER REPLACEMENT
SANITARY SEWER REPLACEMENT
& PAVEMENT REPLACEMENT

APPROVALS	ENGINEER	DATE	APPROVALS	ENGINEER	DATE
City Engineer			Traffic		
Liquid Waste			Water		
A.C.E. - Design			1543	SHEET 27 OF 42	
A.C.E. - Hydrology					

81-507

MEDIAN CURVE DATA
Δ = 15°-13'-49"
R = 130.00'
T = 20.50'
L = 40.75'

Sta. 10+100 Central Ave. (E) = P.O.T. Sta. 24+98.58 Alcazar St. (S)

ALCAZAR ST.

~~(I) 12"x6" Tapping Sleeve~~
~~(I) 1-6" Tapping Valve & Tape A Valve Box~~
(I) ~~60~~ 61.5 L.F. 6" Water Line

(R) 1-12"x12"x6" Tee
(I) 1-12"x12"x6" Cross
(I) 1-6" Gate Valve & Type "A" Box

(R) & (C) Std. C & G & 72" Sidewalk

Sta. 10+53 to Sta. 13+21
(R) 560 L.F. Median Curb
(C) 539 L.F. Median C & G
(C) 60 S.Y. 4" Conc. Median Pvmt.

7209 Central Water Box Relocation

(R) & (C) Std. C & G & 72" Sidewalk

(C) Std. Arterial Pvmt.

2 (R) Exist. Water Valve & Valve Box. Cap Exist. 8" St. Line Plug

CHAMA ST.

(R) 20 L.F. Steel Pipe
(I) 20 L.F. 8" Water Pipe
(I) 1-12"x12"x8" Tee

(c) Manhole

(R) & (C) Std. C & G & 72" Sidewalk

(I) 1-6" 45° Bend w/ Blkng.
(I) 6"x6" Tee

(I) 6"x6" Tee
(I) 8 L.F. 6" Water Pipe Connect to Existing 6" Water Line South

(R) 10 L.F. 4" St. Line Water Line
(I) 1-Transition Coupling
(I) 1-4" All Steel Coupling
Refer to Std. Dwg. No. W-1-2.
(I) 6" Gate Valve
(I) 1-Tape A Valve Box
Plug 4" St. Line East
(I) 1-6"x4" Reducer

(c) Manhole

~~(I) 6"x11¼° Bend~~

Plug San. Sewer Pipe East

(I) 1-6" Sleeve

(R) & (C) Std. C & G & 72" Sidewalk

(I) 475 L.F. 6" Water Pipe

(c) 8" San. Sewer

7220 Central 3/4" Service Line Replacement & Transfer

7222 Central 3/4" Service Line Replacement & Transfer

7226 Central 3/4" Service Line Replacement & Transfer

Sta. 11+42 Sew. Service

Sta. 13+41 (I) Clean-Out

Sta. 14+13 Sew. Service

Sta. 10+55.92 12" Red Point
Sta. 11+15.25 PC 45.12' Rt.
Sta. 11+55.25 PRC 39.62' Rt.
Sta. 11+95.5 PT 34.12' Rt.
Sta. 13+17 36.12' Rt. 2" Red Point
Sta. 13+82 2" Red Pt.
Sta. 11+76.5 Rt. 49.12' Rt.
Sta. 12+16.75 PRC 43.62' Rt.
Sta. 12+57 PT 38.12' Rt.

TC 26.10 · TC 26.34 · TC 27.51 · TC 28.07 · TC 28.30 · TC 27.80 · TC 28.32 · TC 29.74 · TC 30.77 · TC 30.14

33.5' F-F

5" Abandon St. W. · 4" St. W. · 8" CP · 12" C.I.W. · 6" C.I.W. · 4" C · 2" G · UT · PP · R/W · Not Found · Abandon

SEE SHEET NO. 29

CENTRAL AVE. (EAST)

* FOR STORM SEWER PLACEMENT SEE SHEET NO. 7

SCALE IN FEET: 0 20 40 60 80

200.8' @ +1.28% Lt. C & G

61.7' @ +1.22% Lt. C & G

Sta. 10+63.2 Ref. 25.93

Top of Curb Lt. & Rt.

Sta. 12+64 EC 28.50 Meet Existing ℄

Sta. 13+78.3 EC 30.07 Meet Ex. ℄

Sta. 14+40 Elev. 30.82

6" Water Line

32' x 8" San. Sewer @ +1.28%

337' x 8" San. Sewer @ +1.28%

79' x 8" San. Sewer @ +1.28%

℄ San. Sewer 5320.79

Sta. 10+11 Connect to Existing MH ℄ 5314.96

Sta. 10+24 (C) 4' Dia. Type "E" MH ℄ Out 5315.27 ℄ In 5315.02.43 Rim El. 25.03

Sta. 11+82 4' Dia. MH Inv. In = 7.60 Inv. Out = 7.60 Drop (s) = 17.68

Sta. 12+00 EC 27.75 Meet Existing ℄

Sta. 13+50 PT 29.85

Sta. 13+61 (C) 4' Dia. Type "E" MH ℄ Out 5319.73-.77 ℄ In 5319.08-.75

Sta. 14+40 EC 30.75 Meet Existing ℄

150' @ +1.40% Rt. C & G

90' @ +1.14% Rt. C & G

5335 · 5330 · 5325 · 5320 · 5315 · 5310 · 5305

10 · 11 · 12 · 13 · +40

26 1543 2883

8-9-83

AS BUILT INFORMATION
CONTRACTOR · DATE
WORK STAKED BY · DATE
INSPECTOR'S ACCEPTANCE BY · DATE
FIELD VERIFICATION BY · DATE
DRAWINGS CORRECTED BY · DATE
MICRO-FILM INFORMATION
RECORDED BY · DATE
NO.

BENCH MARKS
SQUARE □ CHISELED ON TOP OF CONCRETE CURB AT N.W. RETURN OF CENTRAL AVE. & ALCAZAR ST. ELEV. 5324.87

REFERENCES
MAP NO. K-19

ROBERT F. SYKES · NEW MEXICO · 4591 · REGISTERED PROFESSIONAL ENGINEER

NO.	DATE	REMARKS	BY
2	2-4-83	Revised Water Line	VER
1	1-3-83	Revised Water Line	RFS

REVISIONS
DESIGN
DESIGNED BY: WILSON & CO., ENG. DATE:
DRAWN BY: DATE:
CHECKED BY: DATE:

CITY OF ALBUQUERQUE
MUNICIPAL DEVELOPMENT DEPARTMENT

CENTRAL AVE.

CURB & GUTTER REPLACEMENT
SANITARY SEWER REPLACEMENT
WATER REPLACEMENT
MEDIAN & PAVEMENT REPLACEMENT

APPROVALS	ENGINEER	DATE	APPROVALS	ENGINEER	DATE
City Engineer			Traffic		
Liquid Waste			Water		
A.C.E. - Design			1543	SHEET 28 OF 42	
A.C.E. - Hydrology					

81-507

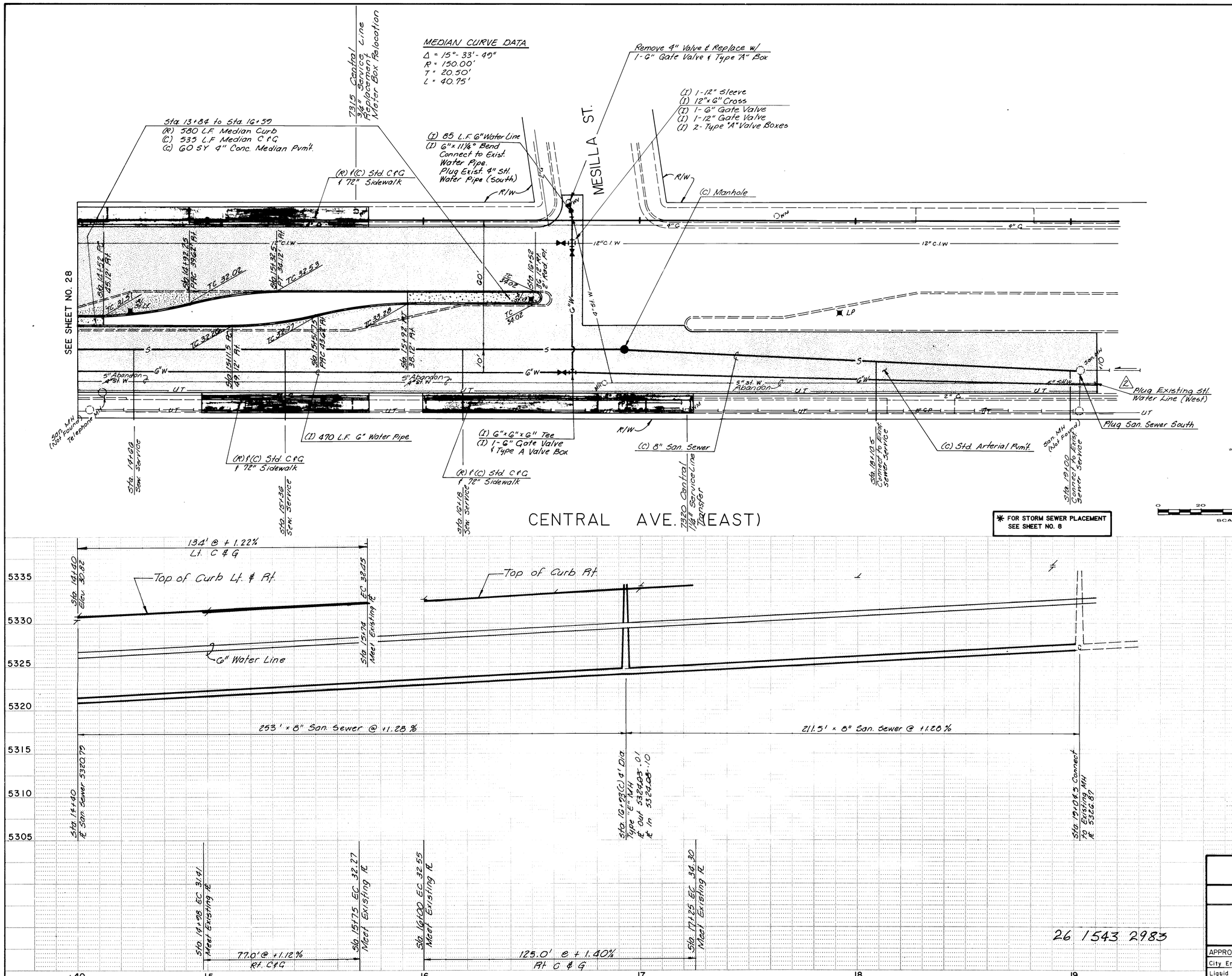

AS BUILT INFORMATION

CONTRACTOR | DATE
WORK STAKED BY | DATE
INSPECTOR'S ACCEPTANCE BY | DATE
FIELD VERIFICATION BY | DATE
DRAWINGS CORRECTED BY | DATE

MICRO-FILM INFORMATION
RECORDED BY | DATE
NO.

BENCH MARKS
SQUARE □ CHISELED ON TOP OF CONCRETE CURB AT N.W. RETURN OF CENTRAL AVE. & ALCAZAR ST. ELEV. 5324.87

REFERENCES
MAP NO. K-19

NO.	DATE	REMARKS	BY
2	2-4-83	Revised Water Line	VER
1	1-3-83	Revised Water Line	RFS

REVISIONS

DESIGN
DESIGNED BY: WILSON & CO., ENG. DATE:
DRAWN BY: DATE:
CHECKED BY: DATE:

ROBERT F. SYKES NEW MEXICO 4591 REGISTERED PROFESSIONAL ENGINEER

8-9-83

CITY OF ALBUQUERQUE
MUNICIPAL DEVELOPMENT DEPARTMENT

CENTRAL AVE.

CURB & GUTTER REPLACEMENT
SANITARY SEWER REPLACEMENT
WATER REPLACEMENT
MEDIAN & PAVEMENT REPLACEMENT

APPROVALS	ENGINEER	DATE	APPROVALS	ENGINEER	DATE
City Engineer			Traffic		
Liquid Waste			Water		
A.C.E. - Design					
A.C.E. - Hydrology					

1543

SHEET 29 OF 42

26 1543 2983

81-507

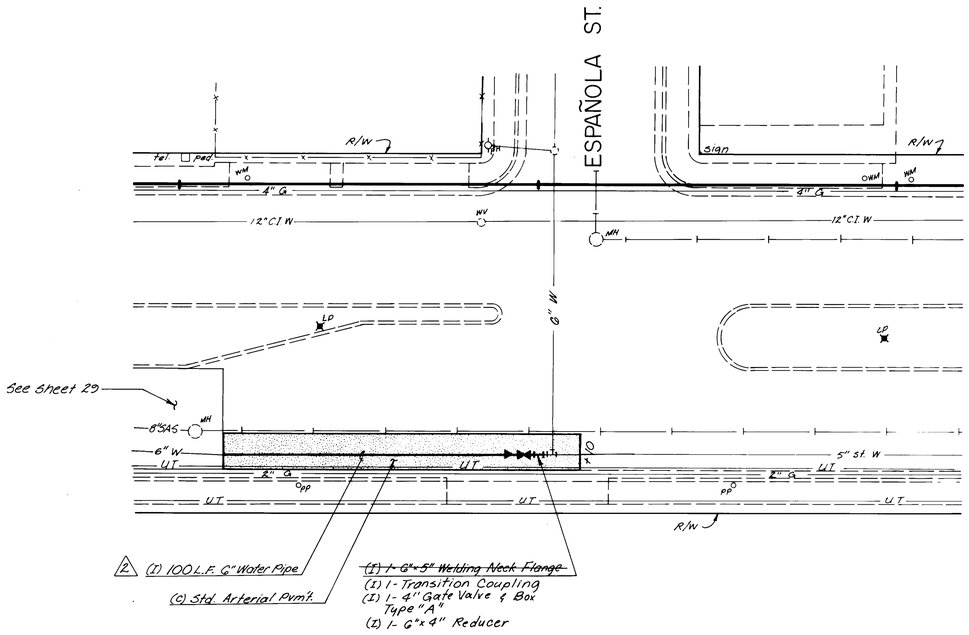

CENTRAL AVENUE (EAST)

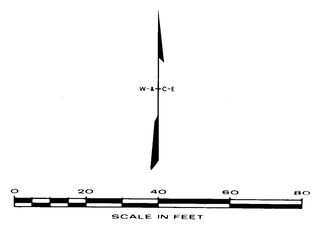

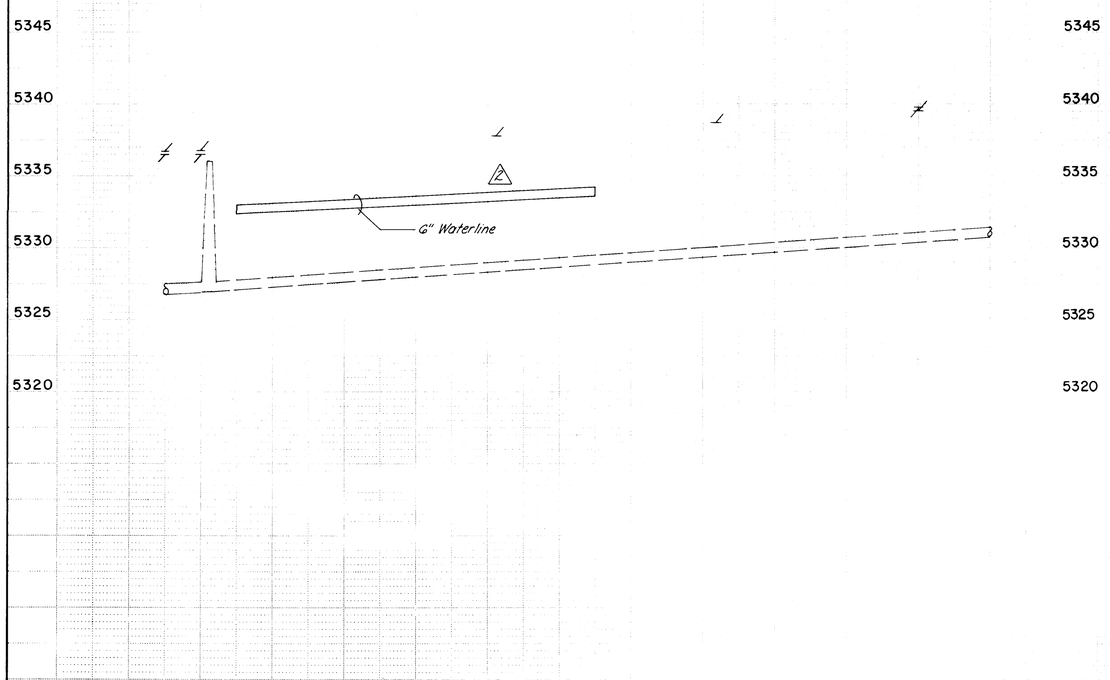

8-9-83

26 154312983

AS BUILT INFORMATION

CONTRACTOR | DATE
WORK STAKED BY | DATE
INSPECTOR'S ACCEPTANCE BY | DATE
FIELD VERIFICATION BY | DATE
DRAWINGS CORRECTED BY | DATE

MICRO-FILM INFORMATION

RECORDED BY | DATE
NO.

BENCH MARKS

SQUARE CHISELED ON TOP OF CONCRETE CURB AT N.W. RETURN OF CENTRAL AVE. & ALCAZAR ST. ELEV. 5324.87

REFERENCES

MAP NO. K-19

NO.	DATE	REMARKS	BY
2	2-4-83	Revised Water Line Location	VEP

REVISIONS

DESIGN

DESIGNED BY: WILSON & CO., ENG. DATE
DRAWN BY DATE
CHECKED BY: DATE

CITY OF ALBUQUERQUE
MUNICIPAL DEVELOPMENT DEPARTMENT

CENTRAL AVE.

WATERLINE REPLACEMENT

APPROVALS	ENGINEER	DATE	APPROVALS	ENGINEER	DATE
City Engineer			Traffic		
Liquid Waste			Water		
A.C.E. - Design					
A.C.E. - Hydrology					

1543

SHEET 29A OF 42

81-507C

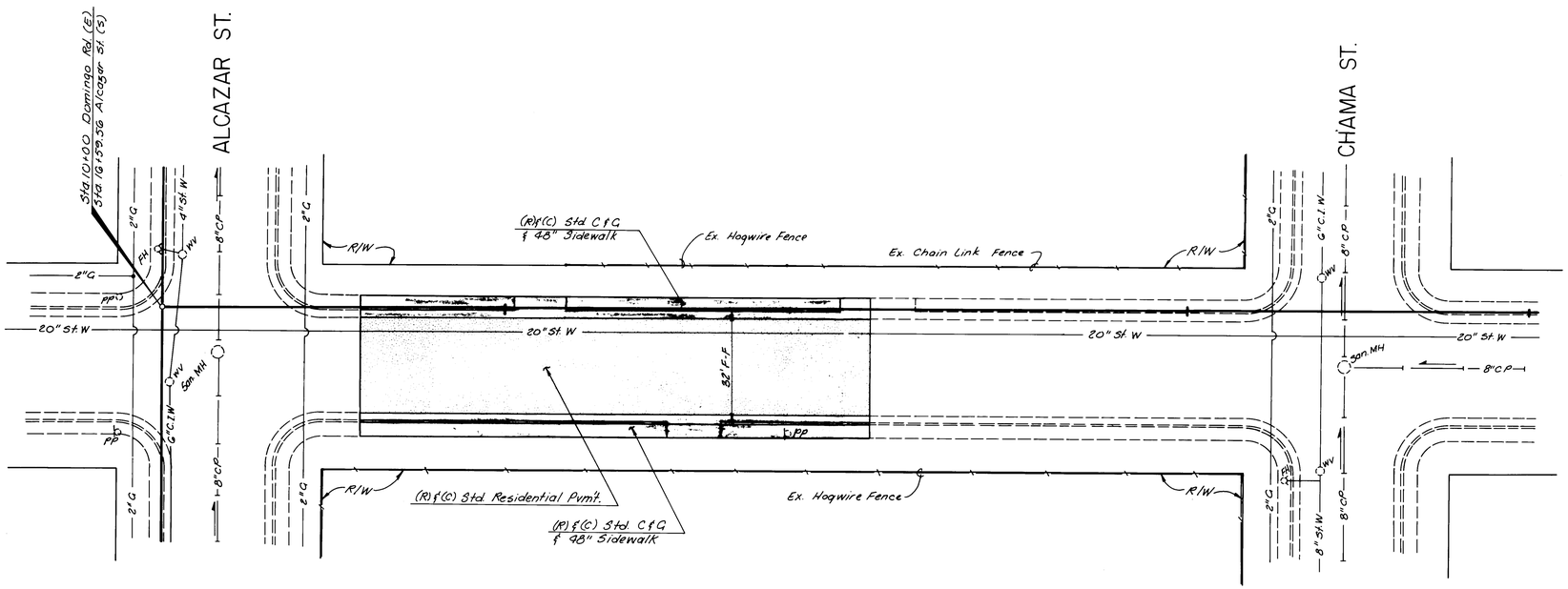

DOMINGO ROAD NE

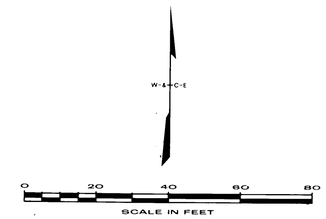

* FOR STORM SEWER PLACEMENT SEE SHEET NO. 9

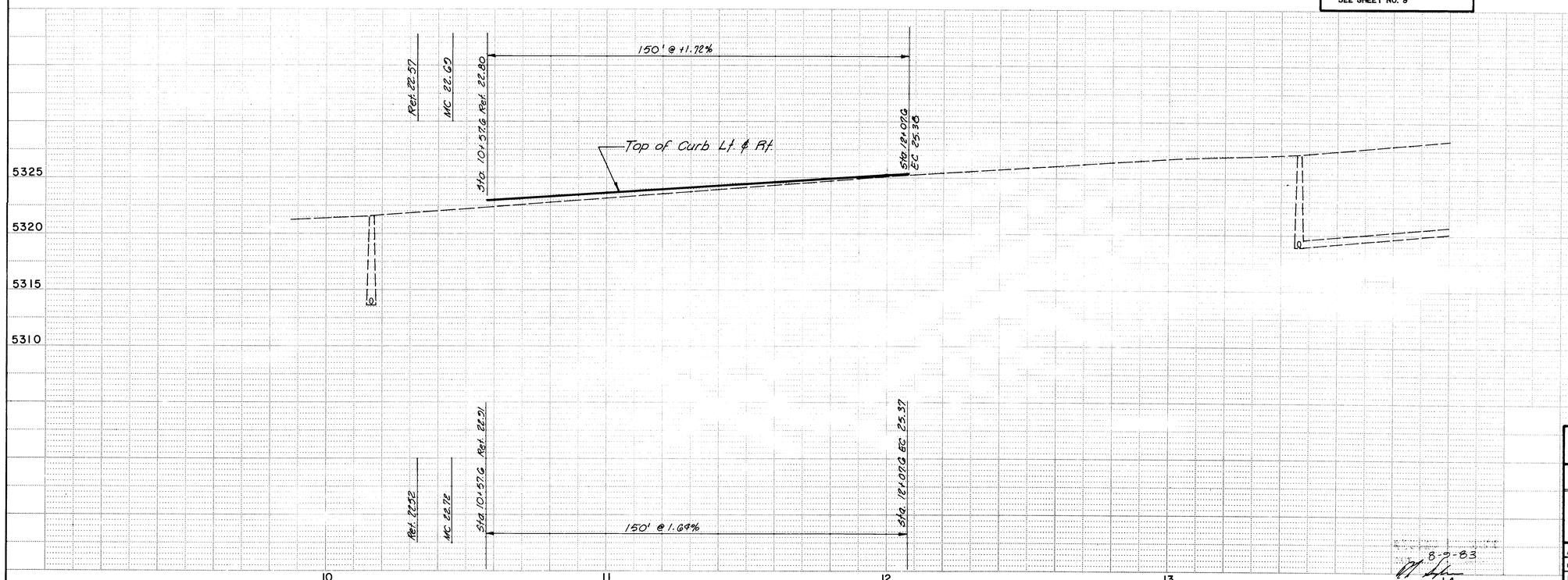

26 1543 3083

8-9-83

AS BUILT INFORMATION

CONTRACTOR	
WORK STAKED BY	DATE
INSPECTOR'S ACCEPTANCE BY	DATE
FIELD VERIFICATION BY	DATE
DRAWINGS CORRECTED BY	DATE

MICRO-FILM INFORMATION

RECORDED BY	DATE
NO.	

BENCH MARKS

SQUARE □ CHISELED ON TOP OF CONCRETE CURB AT N.N.W. RETURN OF ALCAZAR ST. & DOMINGO RD. ELEV. 5321.92

REFERENCES

MAP NO. K-19

ROBERT F. SYKES NEW MEXICO (4591) REGISTERED PROFESSIONAL ENGINEER

NO.	DATE	REMARKS	BY
		REVISIONS	

DESIGN

DESIGNED BY: WILSON & CO., ENG. DATE:
DRAWN BY: DATE:
CHECKED BY: DATE:

CITY OF ALBUQUERQUE
MUNICIPAL DEVELOPMENT DEPARTMENT

DOMINGO ROAD

CURB & GUTTER REPLACEMENT & PAVEMENT REPLACEMENT

APPROVALS	ENGINEER	DATE	APPROVALS	ENGINEER	DATE
City Engineer			Traffic		
Liquid Waste			Water		
A.C.E. - Design			1543	SHEET 30 OF 42	
A.C.E. - Hydrology					

81-507

(I) 1-4" Plug w/Blkng.
(I) 1-4" Transition Coupling
(I) 1-6"x4" Reducer
(I) 2-6" 90° Bends w/Blkng.
(R) & (I) 1-6" Tee w/Blkng.
(R) & (I) 1- Fire Hydrant
(I) 1-6" Gate Valve & Box w/Blkng.

Sta. 10+00 Copper Ave. (E) =
Sta. 10+00 Alcazar St. (S) &
Sta. 10+00 Copper Ave. (W)

ALCAZAR ST.

(I) 1-8"x8"x6"x6" Cross
~~Refer to Sheet 25 for Additional Items of Work~~

(I) 220 L.F. 8" Water Line
(I) 1-8" Cap & Blocking

Sta. 10+58
(I) 1-8" Gate Valve
(I) 1-Type "A" Valve Box

(R) & (C) Std. Residential Pvm't.

Ex. Chn. Lnk Fence

(R) & (C) Std. C & G & 48" Sidewalk

Ex. Blk. Wall

Pi Sta. 13+30.08 Copper Ave. (E) & Chama St. (N)

CHAMA ST.

89° 53' 20"
89° 59' 15"

San MH

Ex. Chn. Lnk. Fnc.

R/W

(C) WC Ramp

SE RETURN
Δ = 90°-00'45"
R = 25.00'
T = 25.01'
L = 39.28'

(R) & (C) Std. C & G & 48" Sidewalk

Ex. Chain Link Fence

Ex. Blk. Wall

Ex. 36" S/W

(I) 1-6" Gate Valve & Box w/Blkng. @ Return

6"x4" Reducer
4" Transition Coupling
2-6" 90° Bends
6" Gate Valve
Fire Hydrant

All pipe & fittings PVC unless otherwise noted.

8"x6" Cross
8" Water line

COPPER AVE. NE

*FOR STORM SEWER PLACEMENT SEE SHEET NO. 10

SCALE IN FEET

153.3' @ +1.08%
Lt. C&G

Sta. 101+46.7 EC 22.76
Meet Existing ℄

Sta. 12+00 EC 34.40
Meet Existing ℄

Top of Curb Lt. & Rt.

18" RCP

8" Water Line

24" RCP

5325
5320
5315
5310
5305
5300
5295

Ref. 22.77
MC 22.80
Sta. 101+57 Ref. 22.83

142.3' @ +1.10%
Rt. C & G

10
11
12
13

26 1543 3183

8-9-83

AS BUILT INFORMATION
CONTRACTOR
WORK STAKED BY — DATE
INSPECTED & ACCEPTANCE BY — DATE
FIELD VERIFIED BY — DATE
DRAWINGS CORRECTED BY — DATE
MICRO-FILM INFORMATION
RECORDED BY — DATE
NO.

BENCH MARKS
9-K19 AT THE INTERSECTION OF LOUISIANA BLVD. & COPPER AVE.
N.E. A SQUARE □ CHISELED ON TOP OF CONCRETE CURB AT THE N.N.E RETURN ELEV. 5318.738
SQUARE □ CHISELED ON TOP OF CONCRETE CURB AT N.N.W RETURN OF COPPER AVE. & CHAMA ST. ELEV. 5325.75

REFERENCES
MAP NO. K-19

ROBERT F. SANDIA NEW MEXICO 4591 REGISTERED PROFESSIONAL ENGINEER

NO.	DATE	REMARKS	BY
2	1-4-83	Revised Water Line Location	VER

REVISIONS

DESIGN
DESIGNED BY: WILSON & CO. ENG. DATE:
DRAWN BY: DATE:
CHECKED BY: DATE:

CITY OF ALBUQUERQUE
MUNICIPAL DEVELOPMENT DEPARTMENT

COPPER AVE.

CURB & GUTTER REPLACEMENT & PAVEMENT REPLACEMENT

APPROVALS	ENGINEER	DATE	APPROVALS	ENGINEER	DATE
City Engineer			Traffic		
Liquid Waste			Water		
A.C.E. - Design			1543	SHEET 31	OF 42
A.C.E. - Hydrology					

81-507

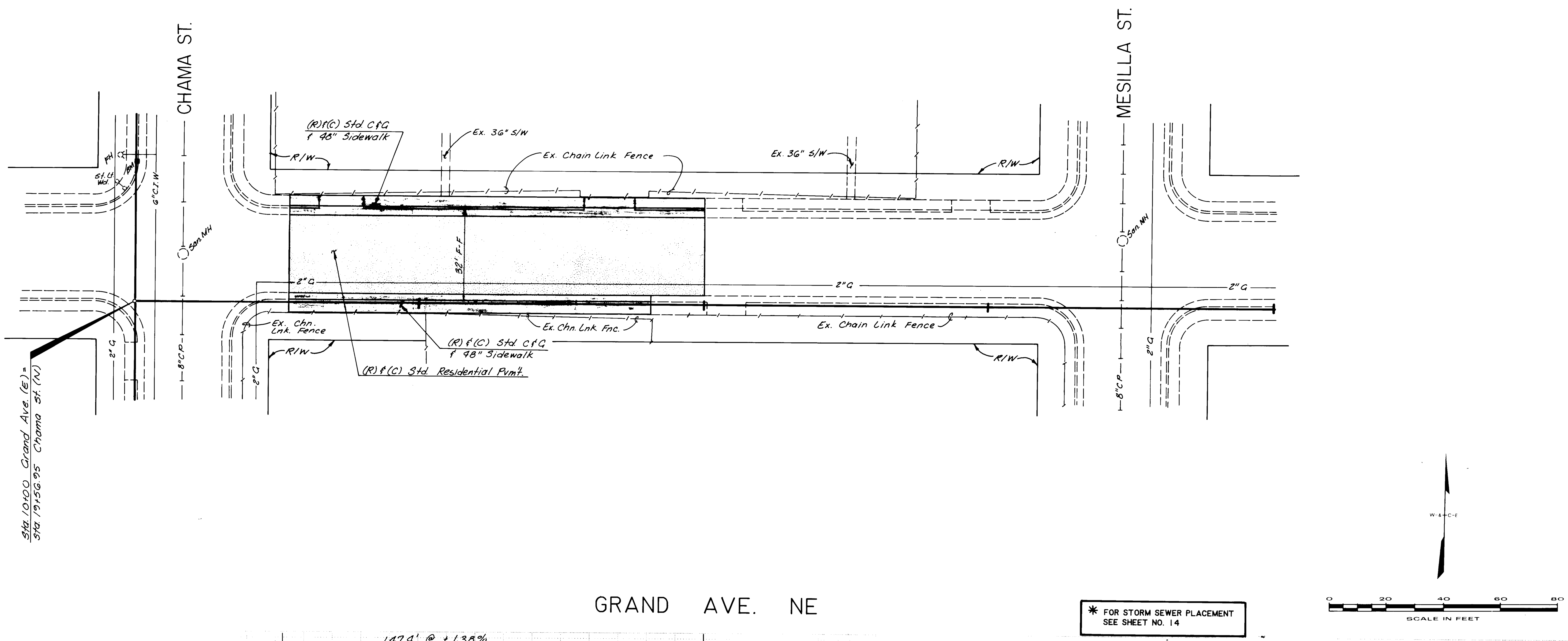

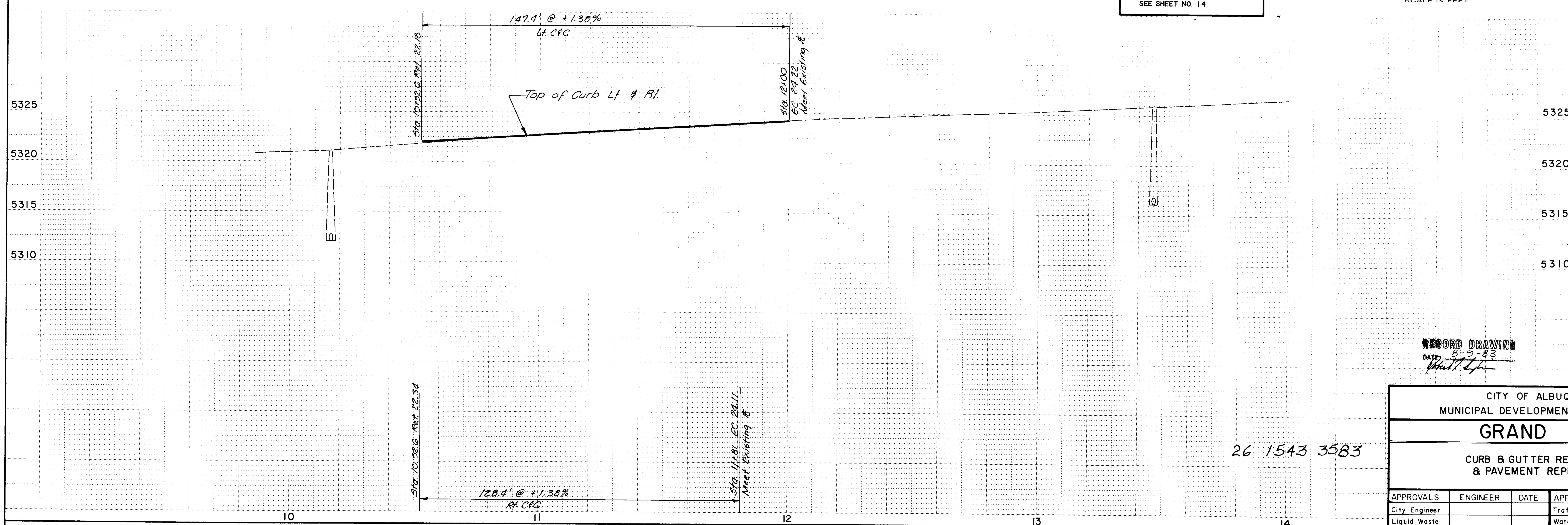

RECORD DRAWING
DATE 8-9-83

26 1543 3583

AS BUILT INFORMATION

CONTRACTOR	
WORK STAKED BY	DATE
INSPECTOR'S ACCEPTANCE BY	DATE
FIELD VERIFICATION BY	DATE
DRAWINGS CORRECTED BY	DATE

MICRO-FILM INFORMATION

RECORDED BY	DATE
NO.	

BENCH MARKS

SQUARE ☐ CHISELED ON TOP OF CONCRETE CURB AT N.N.W. RETURN OF CHAMA ST. & GRAND AVE. ELEV. 5321.20

REFERENCES

MAP NO. K-19

ROBERT F. SYKES — NEW MEXICO — 4591 — REGISTERED PROFESSIONAL ENGINEER

REVISIONS

NO.	DATE	REMARKS	BY

DESIGN

DESIGNED BY: WILSON & CO, ENG. DATE
DRAWN BY: DATE
CHECKED BY: DATE

CITY OF ALBUQUERQUE
MUNICIPAL DEVELOPMENT DEPARTMENT

GRAND AVE.

CURB & GUTTER REPLACEMENT
& PAVEMENT REPLACEMENT

APPROVALS	ENGINEER	DATE	APPROVALS	ENGINEER	DATE
City Engineer			Traffic		
Liquid Waste			Water		
A.C.E.-Design			1543	SHEET 35 OF 42	
A.C.E.-Hydrology					

81-507

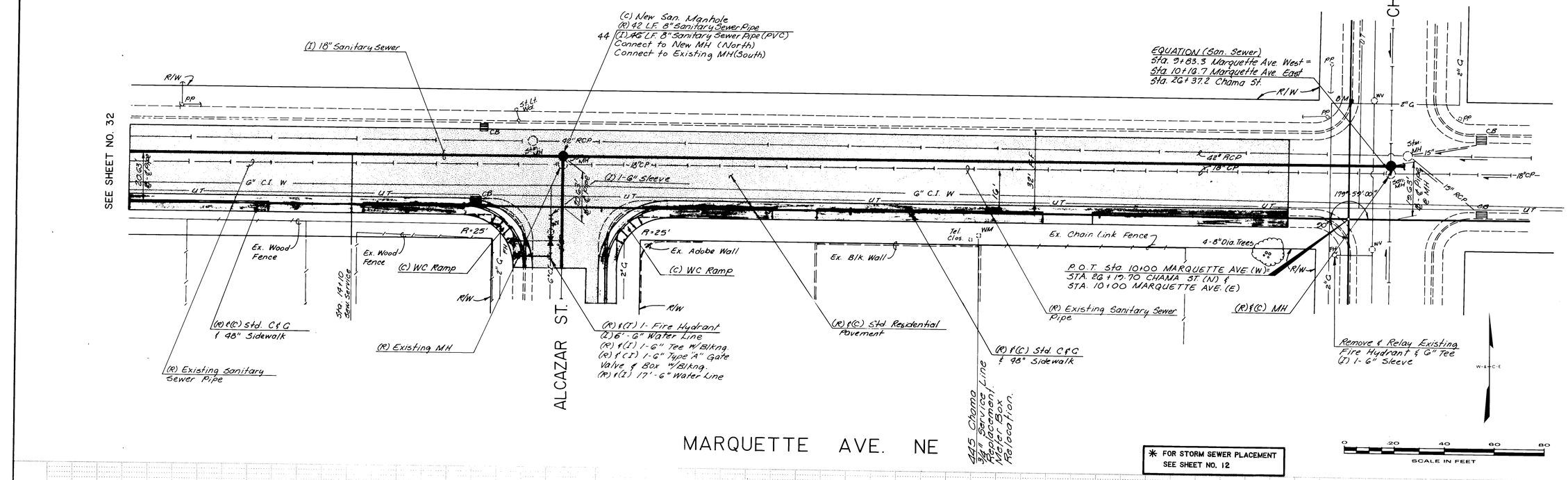

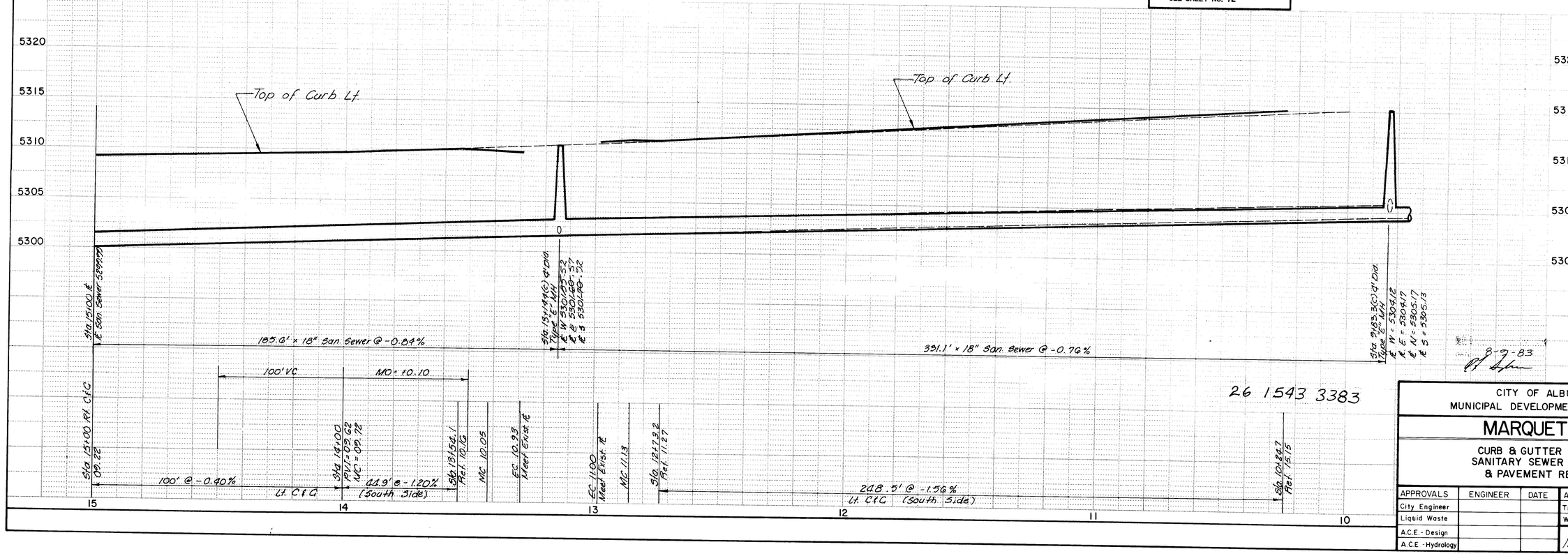

26 1543 3383

AS BUILT INFORMATION

CONTRACTOR | DATE
WORK STAKED BY | DATE
INSPECTOR'S ACCEPTANCE BY | DATE
VERIFICATION BY | DATE
DRAWINGS CORRECTED BY | DATE

MICRO-FILM INFORMATION

RECORDED BY | DATE
NO.

BENCH MARKS

SQUARE □ CHISELED ON TOP OF CONCRETE CURB AT N.W. RETURN OF CHAMA ST. & MARQUETTE AVE. ELEV. 5314.97

REFERENCES

MAP NO. K-19

ROBERT F. SYKES NEW MEXICO (4591) REGISTERED PROFESSIONAL ENGINEER

NO.	DATE	REMARKS	BY
1	1-3-83	Water & San. Sew. line relocations.	RFS

REVISIONS

DESIGN

DESIGNED BY: WILSON & CO., ENG. DATE:
DRAWN BY: DATE:
CHECKED BY: DATE:

CITY OF ALBUQUERQUE
MUNICIPAL DEVELOPMENT DEPARTMENT

MARQUETTE AVE.

CURB & GUTTER REPLACEMENT
SANITARY SEWER REPLACEMENT
& PAVEMENT REPLACEMENT

APPROVALS	ENGINEER	DATE	APPROVALS	ENGINEER	DATE
City Engineer			Traffic		
Liquid Waste			Water		
A.C.E. - Design					
A.C.E. - Hydrology					

1543

SHEET 33 OF 42

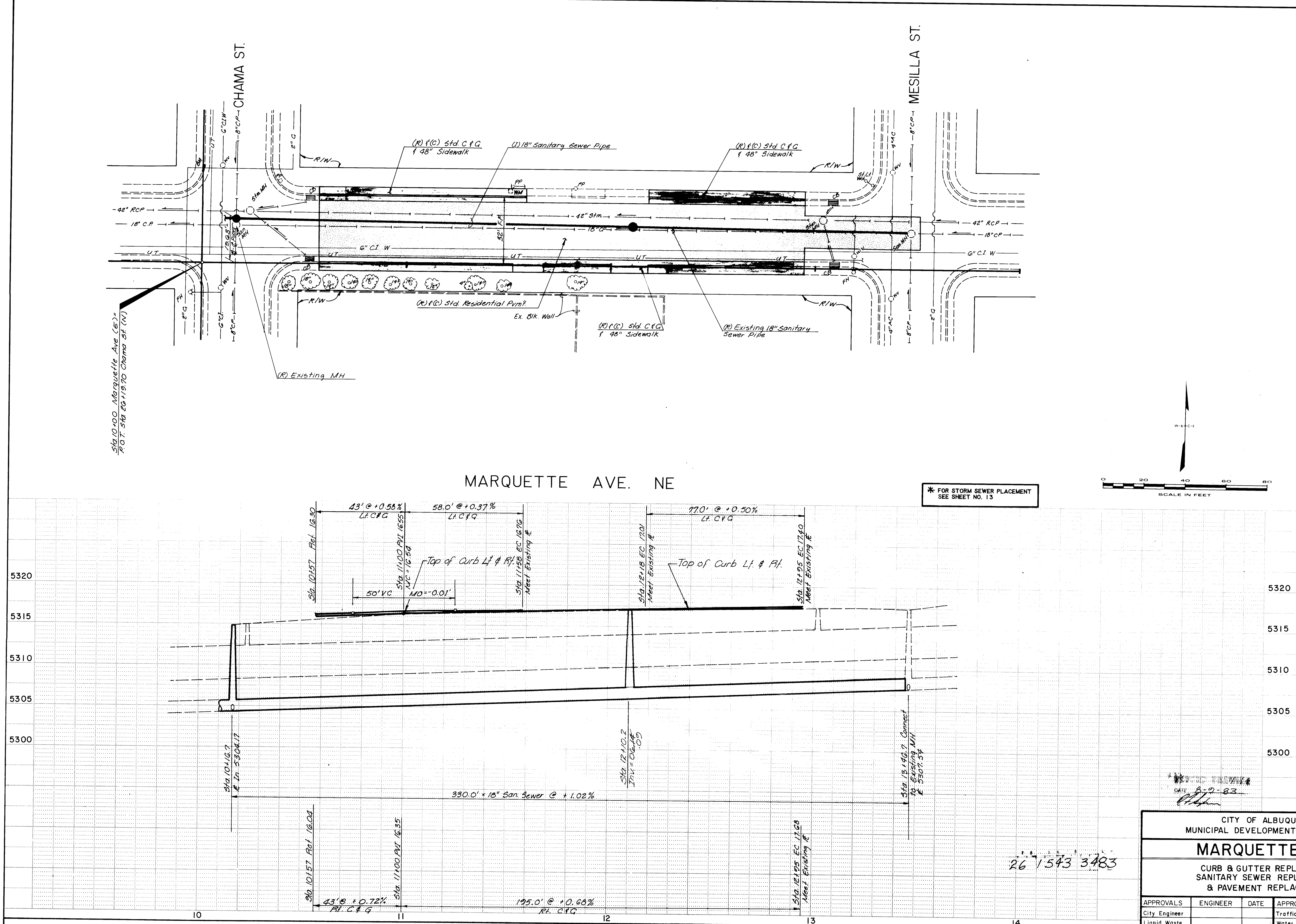

AS BUILT INFORMATION
CONTRACTOR
WORK STAKED BY
INSPECTOR'S ACCEPTANCE BY
FIELD VERIFICATION BY
DRAWINGS CORRECTED BY
MICRO-FILM INFORMATION
RECORDED BY
NO. DATE

BENCH MARKS
SQUARE □ CHISELED ON TOP OF CONCRETE CURB AT N.N.W. RETURN OF MARQUETTE AVE. & CHAMA ST. ELEV. 5314.97

REFERENCES
MAP NO. K-19

REVISIONS
NO.	DATE	REMARKS	BY
1	1-3-83	Water & San. Sewer line relocations	RFS

DESIGN
DESIGNED BY: WILSON & CO., ENG. DATE:
DRAWN BY: DATE:
CHECKED BY: DATE:

DATE 3-9-83

CITY OF ALBUQUERQUE
MUNICIPAL DEVELOPMENT DEPARTMENT

MARQUETTE AVE.

CURB & GUTTER REPLACEMENT
SANITARY SEWER REPLACEMENT
& PAVEMENT REPLACEMENT

APPROVALS	ENGINEER	DATE	APPROVALS	ENGINEER	DATE
City Engineer			Traffic		
Liquid Waste			Water		
A.C.E.-Design					
A.C.E.-Hydrology					

26 1543 3483

1593

SHEET 34 OF 42

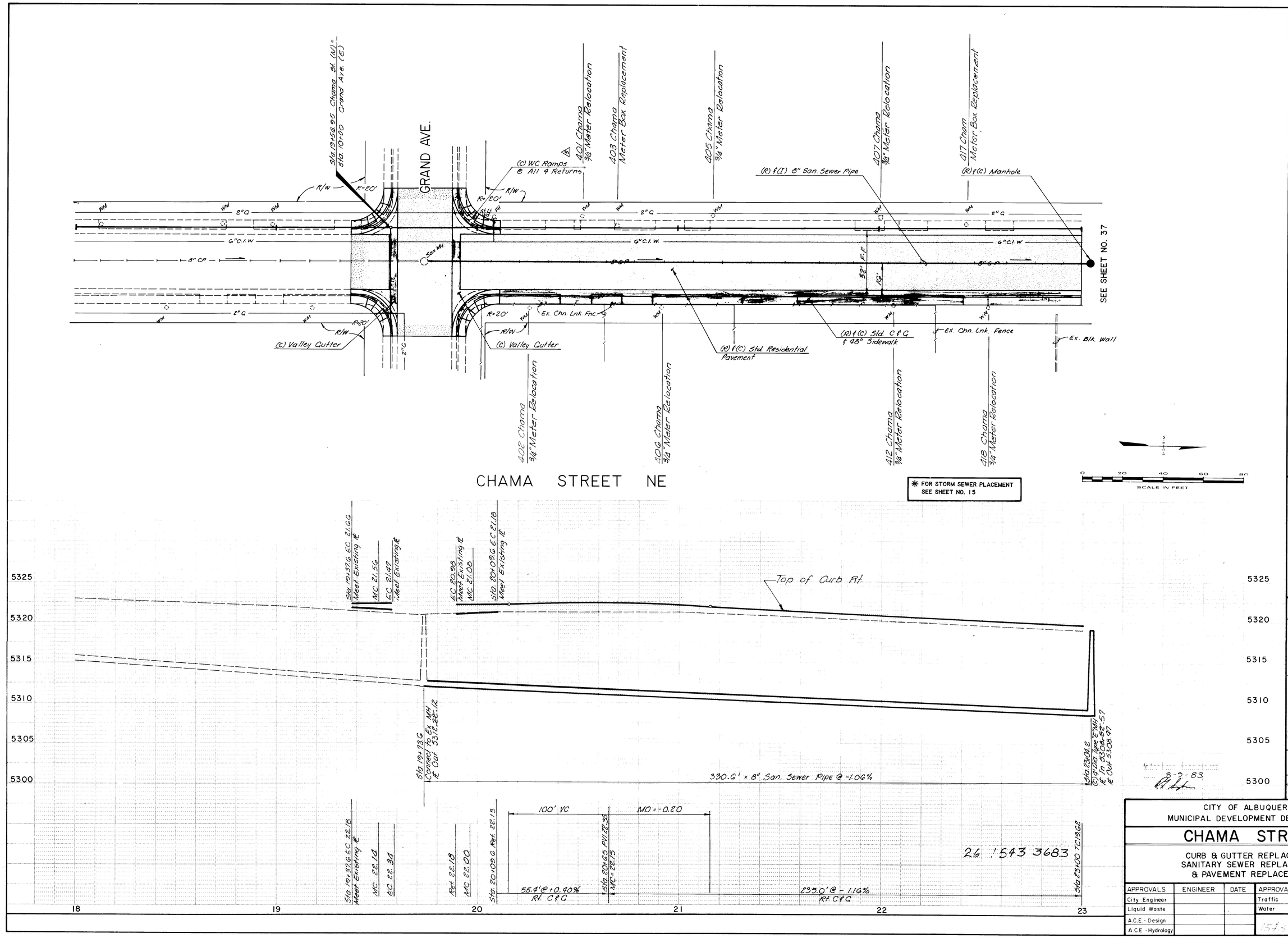

AS BUILT INFORMATION

CONTRACTOR		
WORK STAKED BY		DATE
INSPECTOR'S ACCEPTANCE BY		DATE
FIELD VERIFICATION BY		DATE
DRAWINGS CORRECTED BY		DATE
MICRO-FILM INFORMATION		
RECORDED BY		DATE
NO.		

BENCH MARKS

SQUARE □ CHISELED ON TOP OF CONCRETE CURB AT N.W. RETURN OF CHAMA ST. & GRAND AVE. ELEV. 5321.20

REFERENCES

MAP NO K-19

ROBERT F. SYKES NEW MEXICO 4391 REGISTERED PROFESSIONAL ENGINEER

NO	DATE	REMARKS	BY
1	9/24/82	Water Meter Notes	

REVISIONS

DESIGN

DESIGNED BY: WILSON & CO., ENG. DATE:
DRAWN BY: DATE:
CHECKED BY: DATE:

CITY OF ALBUQUERQUE
MUNICIPAL DEVELOPMENT DEPARTMENT

CHAMA STREET

CURB & GUTTER REPLACEMENT
SANITARY SEWER REPLACEMENT
& PAVEMENT REPLACEMENT

APPROVALS	ENGINEER	DATE	APPROVALS	ENGINEER	DATE
City Engineer			Traffic		
Liquid Waste			Water		
A.C.E. - Design					
A.C.E. - Hydrology					

SHEET 36 OF 42

81-507

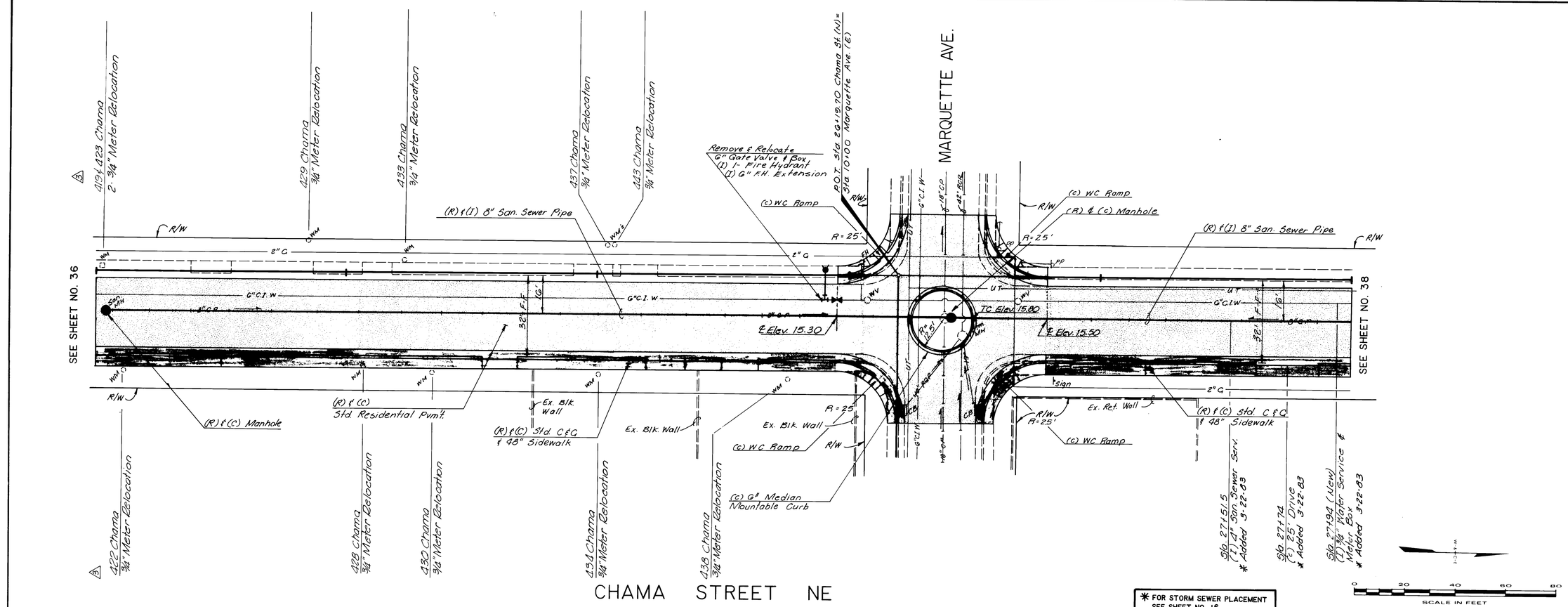

* FOR STORM SEWER PLACEMENT SEE SHEET NO. 16

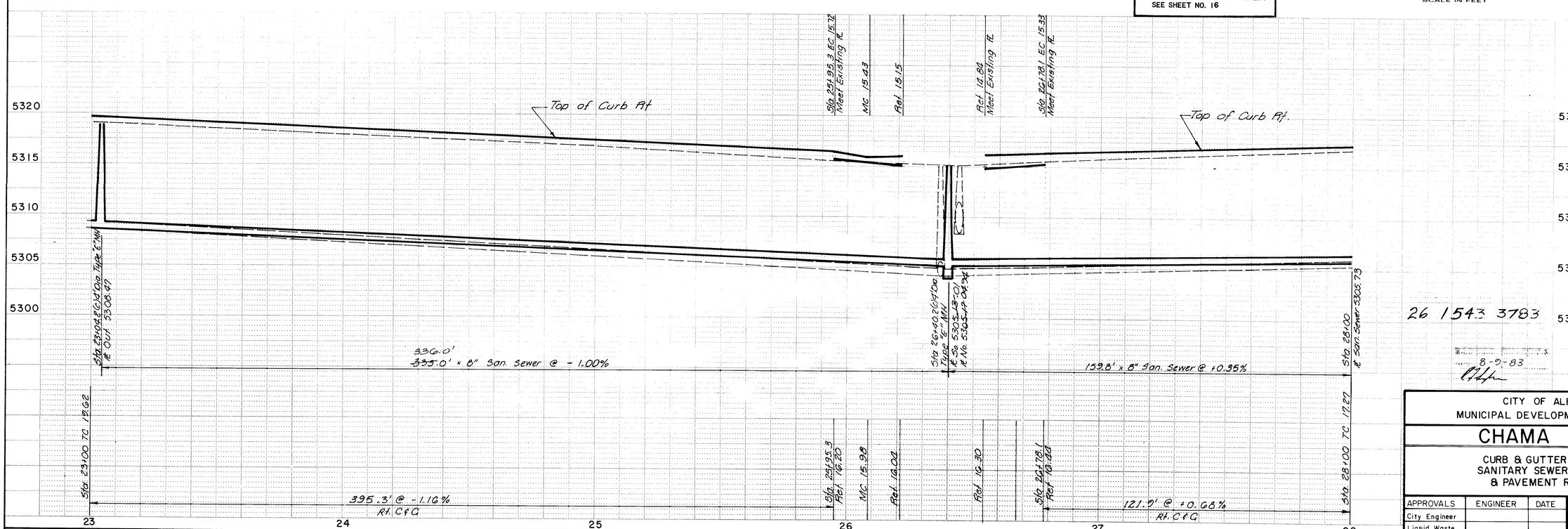

26 1543 3783

8-9-83

AS BUILT INFORMATION	
CONTRACTOR	
WORK STAKED BY	DATE
INSPECTOR'S ACCEPTANCE BY	DATE
VERIFICATION BY	DATE
DRAWING CORRECTED BY	DATE
MICRO-FILM INFORMATION	
RECORDED BY	DATE
NO.	

BENCH MARKS

SQUARE □ CHISELED ON TOP OF CONCRETE CURB AT N.W. RETURN OF CHAMA ST. & MARQUETTE AVE. ELEV. 5314.97

REFERENCES

MAP NO. K-19

ROBERT F. STRATTON NEW MEXICO 459 REGISTERED PROFESSIONAL ENGINEER

NO.	DATE	REMARKS	BY
1	1-3-83	Water & San. Sew. line relocations.	RFS
2	9/26/83	Add Water Meter Notes	RFS

REVISIONS

DESIGNED BY: WILSON & CO., ENG. DATE:
DRAWN BY: DATE:
CHECKED BY: DATE:

CITY OF ALBUQUERQUE
MUNICIPAL DEVELOPMENT DEPARTMENT

CHAMA STREET

CURB & GUTTER REPLACEMENT
SANITARY SEWER REPLACEMENT
& PAVEMENT REPLACEMENT

APPROVALS	ENGINEER	DATE	APPROVALS	ENGINEER	DATE
City Engineer			Traffic		
Liquid Waste			Water		
A.C.E. - Design			1593	SHEET 37 OF 42	
A.C.E. - Hydrology					

81-507

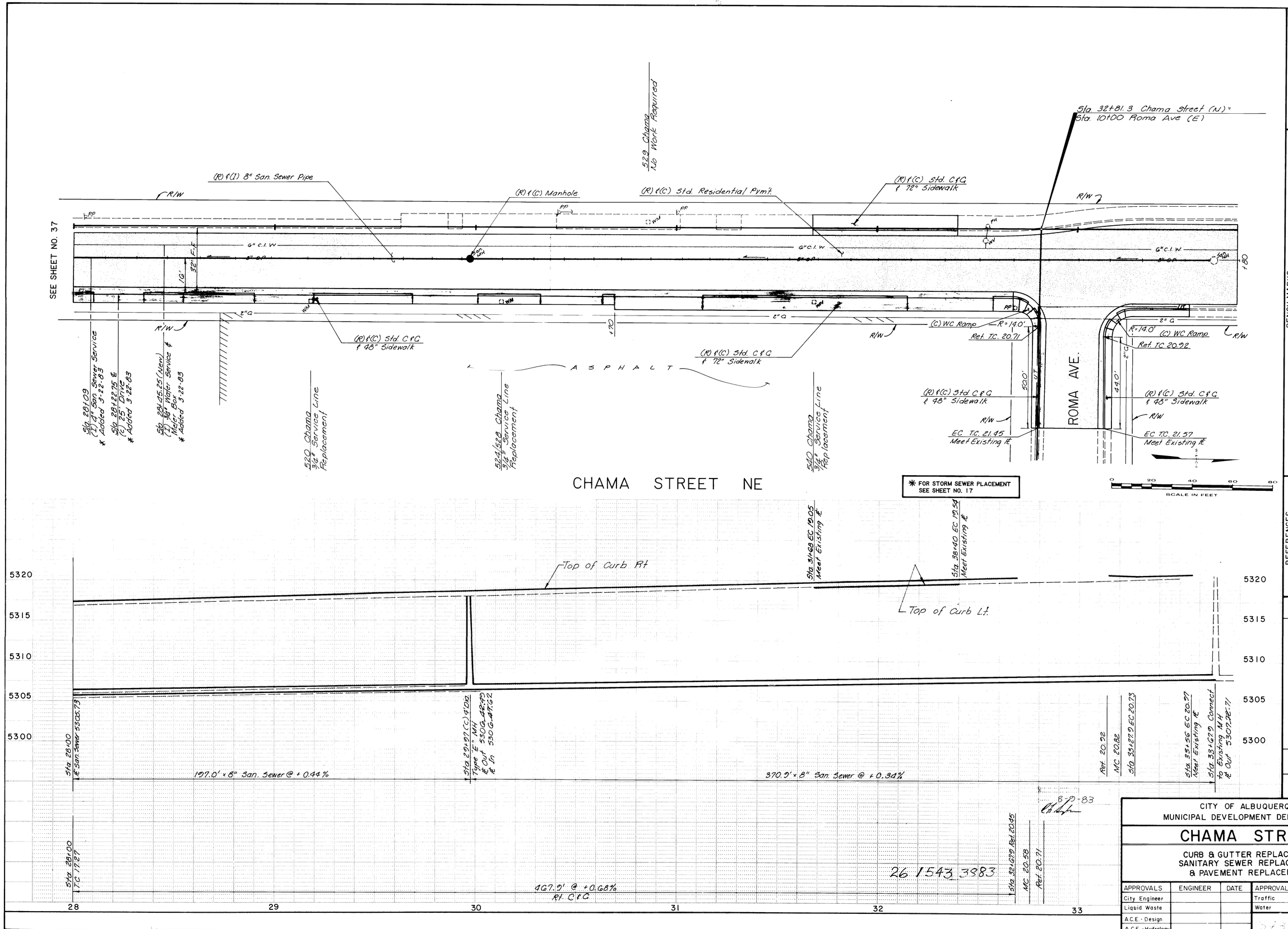

AS BUILT INFORMATION

CONTRACTOR | DATE
WORK STAKED BY | DATE
INSPECTOR ACCEPTANCE BY | DATE
FIELD VERIFICATION BY | DATE
DRAWINGS CORRECTED BY | DATE

MICRO-FILM INFORMATION
RECORDED BY | DATE
NO.

BENCH MARKS

REFERENCES
MAP NO. K-19

ROBERT F. SYKES NEW MEXICO 4591 REGISTERED PROFESSIONAL ENGINEER

NO.	DATE	REMARKS	BY
		REVISIONS	

DESIGN
DESIGNED BY: WILSON & CO., ENG. DATE:
DRAWN BY: DATE:
CHECKED BY: DATE:

CITY OF ALBUQUERQUE
MUNICIPAL DEVELOPMENT DEPARTMENT

CHAMA STREET

CURB & GUTTER REPLACEMENT
SANITARY SEWER REPLACEMENT
& PAVEMENT REPLACEMENT

APPROVALS	ENGINEER	DATE	APPROVALS	ENGINEER	DATE
City Engineer			Traffic		
Liquid Waste			Water		
A.C.E. - Design					
A.C.E. - Hydrology					

SHEET 38 OF 42

81-507

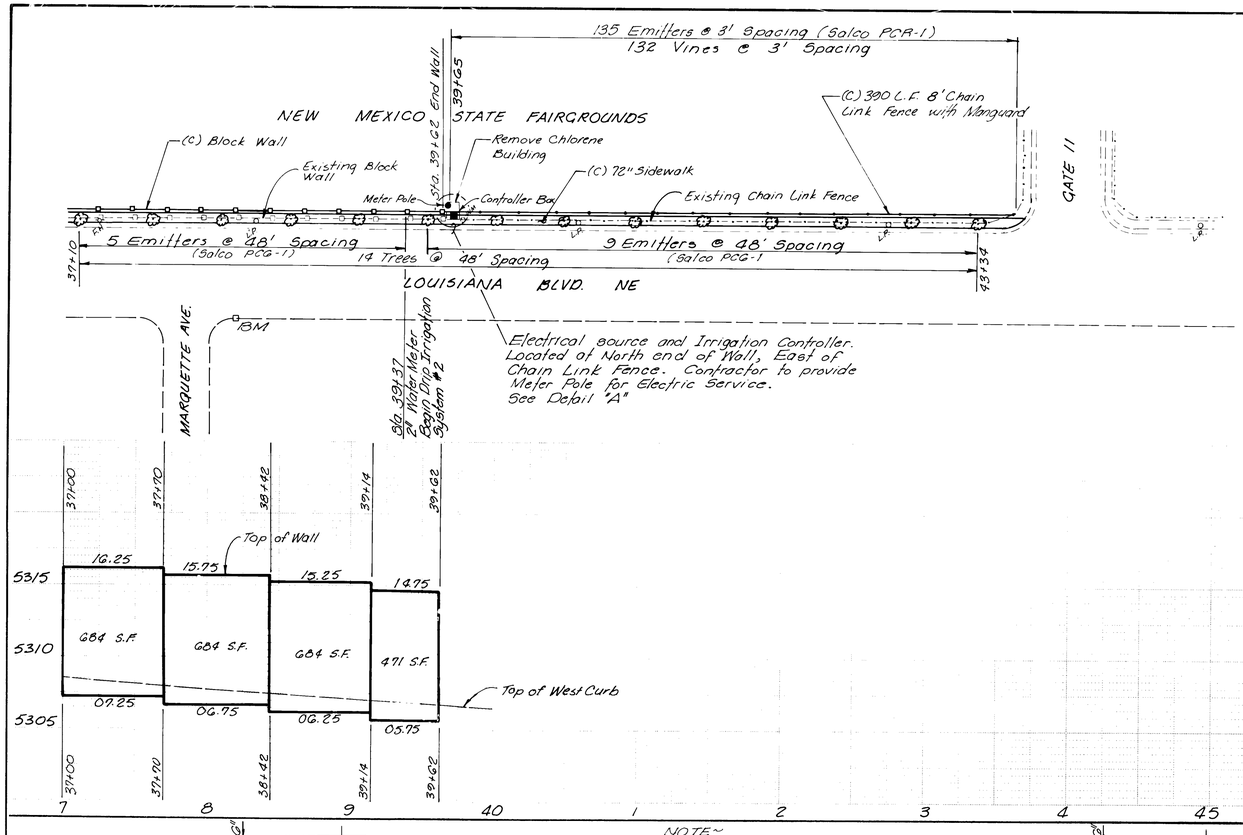

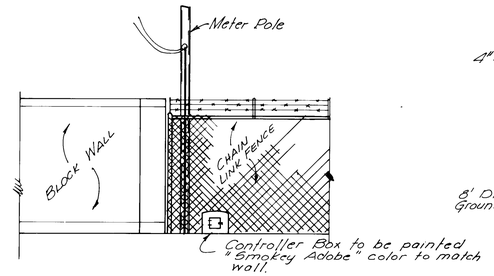

DETIAL "A"

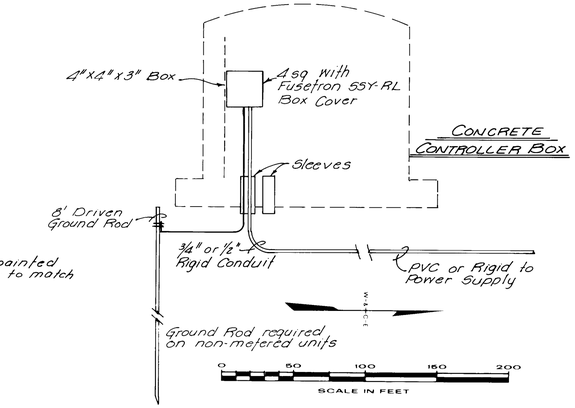

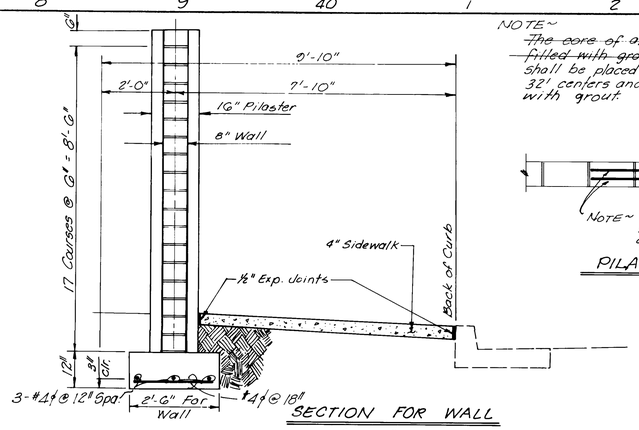

SECTION FOR WALL

Scale 1" = 2'-0"

NOTE~
~~The core of all blocks shall be filled with grout and~~ #4 bars shall be placed full depth @ 32' centers and that core filled with grout.

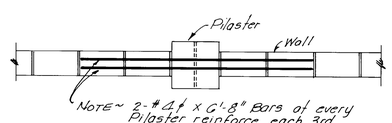

NOTE~ 2-#4 x 6'-8" Bars of every Pilaster reinforce each 3rd course as shown above. Use notched blocks

PILASTER PLAN

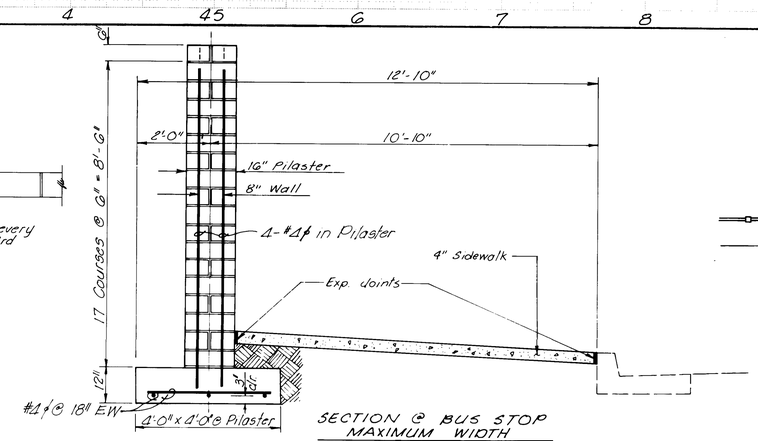

SECTION @ BUS STOP
MAXIMUM WIDTH

Scale 1" = 2'-0"

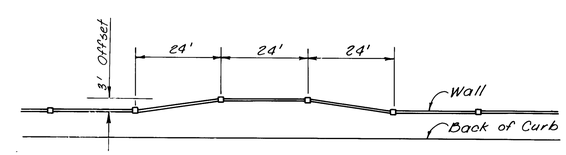

PLAN
BUS STOP
1" = 20'-0"

26 1543 4083

ISSUE DRAWING
8-2-83

A SQUARE CHISELED ON TOP OF CONCRETE CURB AT NNE RETURN OF MARQUETTE AVE. & LOUISIANA BLVD. ELEV. 5308.29

BENCH MARKS

REFERENCES
K-18 & K-19

AS BUILT INFORMATION

MICRO-FILM INFORMATION

ROBERT F. SIMS
NEW MEXICO
459
PROFESSIONAL ENGINEER
REGISTERED

NO.	DATE	REVISIONS	BY
1	9/27/82	Revised Per Addendum No. 3	RFS

DESIGNED BY WILSON & CO. ENG
DRAWN BY
CHECKED BY

CITY OF ALBUQUERQUE
MUNICIPAL DEVELOPMENT DEPARTMENT

FAIRGROUNDS STORM WATER
RELIEF SYSTEM PHASE I

FAIRGROUNDS WALL & LANDSCAPING

APPROVALS	ENGINEER	DATE	APPROVALS	ENGINEER	DATE
City Engineer			Traffic		
Liquid Waste			Water		
A.C.E. - Design					
A.C.E. - Hydrology					

1543

SHEET 40 OF 42

81-507

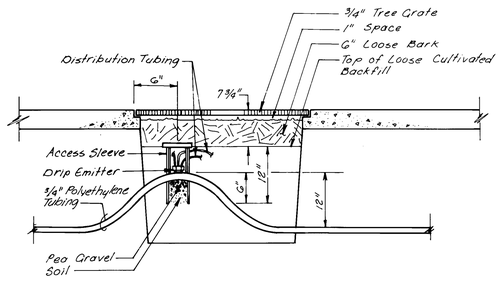

SECTION A – A

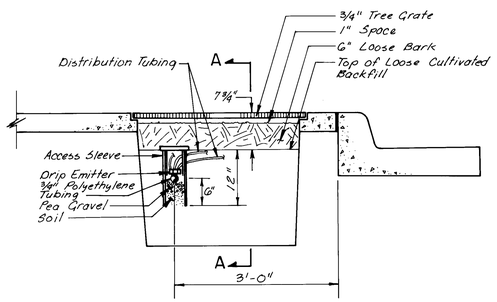

DRIP EMITTER & ACCESS SLEEVE DETAIL
NO SCALE

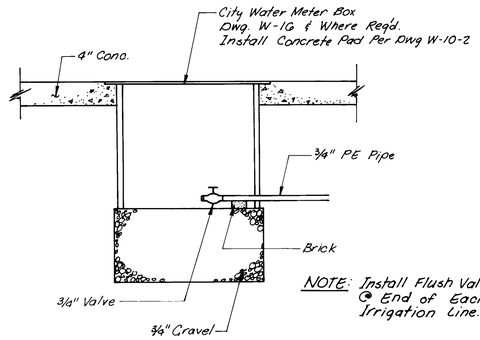

NOTE: Install Flush Valve & Box @ End of Each Drip Irrigation Line.

FLUSH VALVE & BOX
NO SCALE

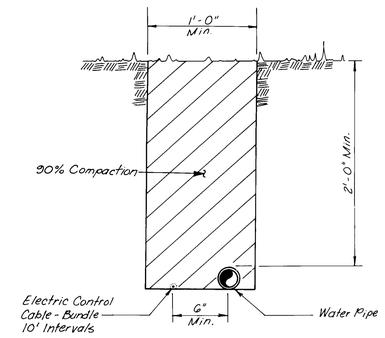

TRENCH DETAIL
NO SCALE

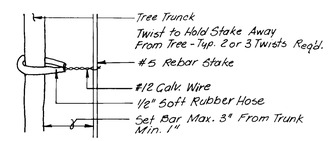

ATTACHMENT DETAIL
NO SCALE

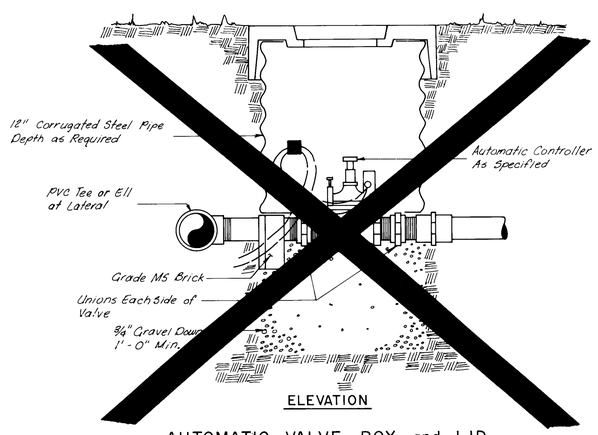

AUTOMATIC VALVE BOX and LID
NO SCALE

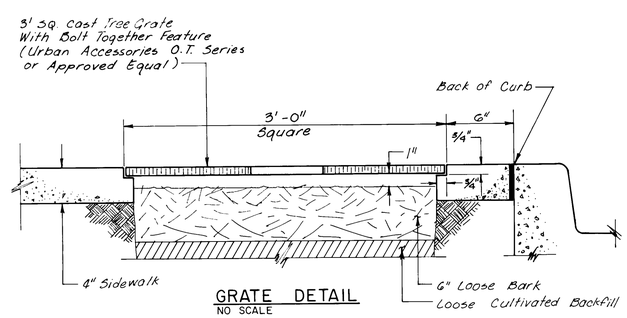

GRATE DETAIL
NO SCALE

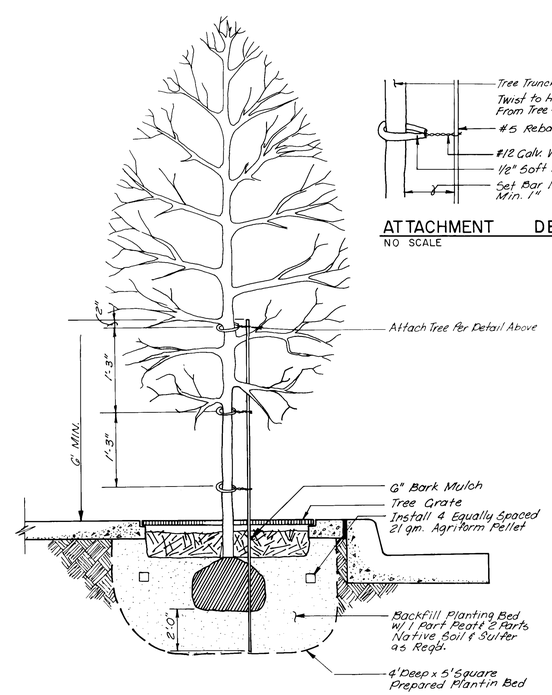

PLANTING DETAIL
NO SCALE

NOTE: All Materials & Construction Shall Be Approved by Engineer Prior To Construction

26 1543 41.83

AS BUILT INFORMATION

CONTRACTOR	
WORK STAKED BY	DATE
INSPECTOR'S ACCEPTANCE BY	DATE
FIELD VERIFICATION BY	DATE
DRAWINGS CORRECTED BY	DATE

MICRO-FILM INFORMATION

RECORDED BY	DATE
NO.	

BENCH MARKS

REFERENCES

MAP NO.

ROBERT L. SANDERS N.M. 4591 REGISTERED PROFESSIONAL ENGINEER

NO.	DATE	REMARKS	BY
1	9/27/82	REVISED PER ADDENDUM #3	RPS

REVISIONS

DESIGN

DESIGNED BY: WILSON & CO., ENG. DATE:
DRAWN BY: DATE:
CHECKED BY: DATE:

8-2-83

CITY OF ALBUQUERQUE
MUNICIPAL DEVELOPMENT DEPARTMENT

FAIRGROUNDS STORM WATER RELIEF SYSTEM PHASE I

LANDSCAPING MISCELLANEOUS DETAILS

APPROVALS	ENGINEER	DATE	APPROVALS	ENGINEER	DATE
City Engineer			Traffic		
Liquid Waste			Water		
A.C.E. - Design			SHEET 41 OF 42		
A.C.E. - Hydrology			1543		

81-507

NOTE:
Contractor will install material as shown or as approved by the Engineer.

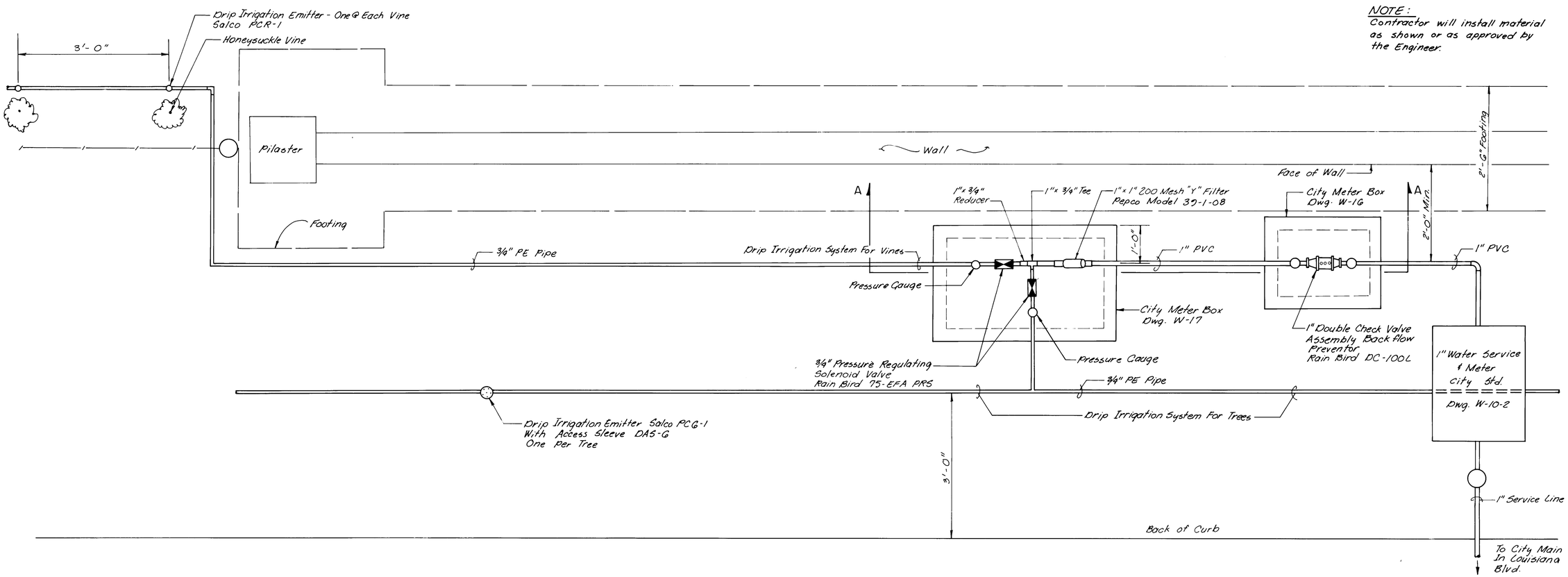

PLAN

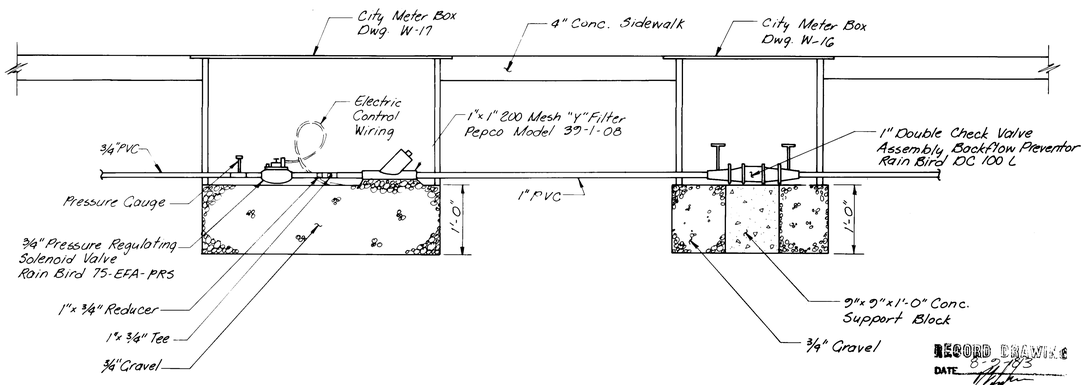

RECORD DRAWING
DATE 8-2-93

SECTION A - A

26 1543 4283

AS BUILT INFORMATION
CONTRACTOR
WORK STAKED BY — DATE
INSPECTOR ACCEPTANCE BY — DATE
FIELD VERIFICATION BY — DATE
DRAWINGS CORRECTED BY — DATE
MICRO-FILM INFORMATION
RECORDED BY — DATE
NO.

BENCH MARKS

REFERENCES
MAP NO.

NO.	DATE	REMARKS	BY
1	9/27/82	Revised Per Addendum #3	RFS

REVISIONS

DESIGN
DESIGNED BY: WILSON & CO., ENG. DATE:
DRAWN BY: DATE:
CHECKED BY: DATE:

CITY OF ALBUQUERQUE
MUNICIPAL DEVELOPMENT DEPARTMENT

FAIRGROUNDS STORM WATER
RELIEF SYSTEM PHASE I

FAIRGROUNDS IRRIGATION SYSTEM

APPROVALS	ENGINEER	DATE	APPROVALS	ENGINEER	DATE
City Engineer			Traffic		
Liquid Waste			Water		
A.C.E. - Design			1543	SHEET 42 OF 42	
A.C.E. - Hydrology					

81-507