ALBUQUERQUE METROPOLITAN ARROYO FLOOD CONTROL AUTHORITY

WESTGATE DIVERSION CHANNELS

SNOW VISTA CHANNEL-PHASE II & III

PROJECT LOCATION: ALBUQUERQUE NEW MEXICO

INDEX OF DRAWINGS

DATE: SEPTEMBER, 1986

AMAFCA

APPROVAL OF AS BUILT DRAWINGS
CHIEF CONSTRUCTION ENGINEER
DATE: 10-6-87

26 17230187

1723

REVISED 11/6/86

5194.11

LEEDSHILL - HERKENHOFF, INC.
Copper Square, 500 Copper Ave. N.W.
P.O. Box 1217
Albuquerque, New Mexico 87103
(505) 247-0294
A SUBSIDIARY OF GORDON HERKENHOFF AND ASSOCIATES, INC.

ALBUQUERQUE SANTA FE PHOENIX SAN FRANCISCO SAN DIEGO

RECORD DRAWING
Date JUL 1 0 1987
These drawings have been revised based on field data and every reasonable attempt has been made to depict construction as actually performed.

CLINTON E. TOE REGISTERED PROFESSIONAL ENGINEER

BH-LN No. 44122

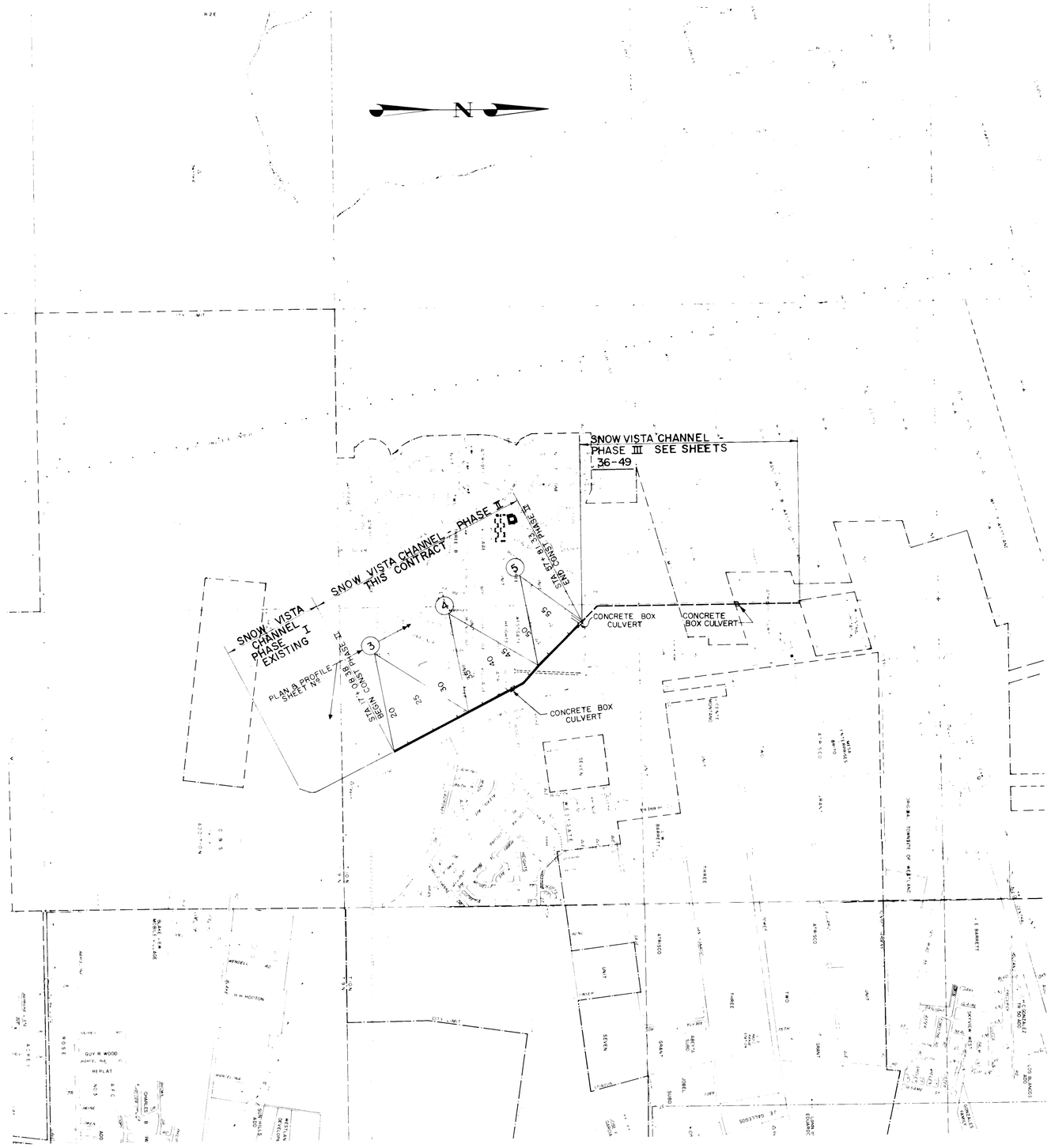

GENERAL NOTES

1. TWO (2) WORKING DAYS PRIOR TO ANY EXCAVATION, CONTRACTOR MUST CONTACT LINE LOCATING SERVICE, 765-1234, FOR LOCATION OF EXISTING UTILITIES.
2. PRIOR TO CONSTRUCTION, THE CONTRACTOR SHALL EXCAVATE AND VERIFY THE HORIZONTAL AND VERTICAL LOCATIONS OF ALL OBSTRUCTIONS. SHOULD A CONFLICT EXIST, THE CONTRACTOR SHALL NOTIFY THE ENGINEER SO THAT THE CONFLICT CAN BE RESOLVED WITH MINIMUM AMOUNT OF DELAY.
3. ALL NEW STREET PAVING, DRIVEWAYS, SIDEWALKS, AND CURB AND GUTTERS ABUTTING EXISTING AREAS SHALL MATCH THE ELEVATION OF THOSE AREAS.
4. THE CONTRACTOR SHALL ASSUME RESPONSIBILITY FOR ANY DAMAGE TO EXISTING PAVING OR CURB AND GUTTER DURING CONSTRUCTION, APART FROM THOSE SECTIONS INDICATED FOR REMOVAL ON THE PLANS, AND SHALL REPAIR OR REPLACE SAME AT HIS OWN EXPENSE. HE SHALL SUITABLY PROTECT THE CURB AND GUTTER FROM INCIDENTAL SPLASHING DURING THE TACK COAT APPLICATION AND SHALL BE RESPONSIBLE FOR CLEANING SAME AT HIS OWN COST SHOULD SPLASHING OCCUR.
5. ALL UTILITY LINES WHICH ARE NOT SPECIFICALLY DESIGNATED TO BE REMOVED AND REPLACED ON THE PLANS SHALL BE MAINTAINED IN SERVICE. SHORING, SHEETING, AND OTHER MEANS OF SUPPORT SHALL BE EMPLOYED BY THE CONTRACTOR TO PREVENT DAMAGE OR LOSS OF THESE EXISTING UTILITIES. BEAM AND CABLE OR OTHER ADEQUATE SUPPORTS SHALL BE USED FOR TEMPORARY SUPPORT OF ALL UTILITY LINES WHICH CROSS TRENCHES. ANY DAMAGE TO EXISTING UTILITIES SHALL PROMPTLY BE REPAIRED AT THE CONTRACTOR'S EXPENSE. THE ENGINEER SHALL BE IMMEDIATELY NOTIFIED OF ANY SIGNIFICANT DEVIATION OF EXPOSED UTILITIES FROM THE LOCATIONS SHOWN ON THE PLANS SO THAT CONFLICTS CAN BE RESOLVED IN A TIMELY MANNER.
6. ALL MANHOLE AND CHANNEL STEPS SHALL BE 1/2" GRADE 60 STEEL REINFORCING ROD ENCAPSULATED IN A CO-POLYMER POLYPROPYLENE AS MANUFACTURED BY M.A. INDUSTRIES, INC. (MODEL #P-2-PFS) STEPS ARE NOT TO BE PRECAST IN PLACE BUT SHALL BE INSTALLED AS RECOMMENDED BY THE MANUFACTURER.
7. ALL MANHOLE COVERS, WATER VALVES, OR OTHER SERVICE ACCESS SHALL MATCH EXISTING GRADE OF PAVEMENT. ON UNPAVED SURFACES, THESE SHALL MATCH EXISTING GROUND SURFACES OR FINAL GRADES, WHICHEVER APPLIES.
8. PAVEMENT REPLACEMENT. ALL ASPHALT PAVEMENT REPLACEMENT SHALL BE IN ACCORDANCE WITH STD. DWG. P-25. ARTERIAL SECTION SHALL BE USED ON GIBSON BLVD. RESIDENTIAL SECTION SHALL BE USED ON ALL REMAINING STREETS.
9. DRIVEPADS SHALL MEET THE 6.5' MINIMUM DEPTH REQUIREMENT PER ALBUQUERQUE STANDARD DRAWINGS P-11 UNLESS RIGHT-OF-WAY IS UNAVAILABLE.
10. RIGHT-OF-WAY SHOWN IS APPARENT RIGHT-OF-WAY DETERMINED FROM PLAT MAPS AND LOCATED PROPERTY TIES.
11. ALL WATER CONNECTIONS ARE WET CONNECTIONS UNLESS OTHERWISE NOTED ON PLANS.
12. THE CONTRACTOR IS TO COORDINATE UTILITY RELOCATIONS TO BE PERFORMED BY OTHERS DURING ALL PHASES OF CONSTRUCTION.
13. ALL DISTURBED AREAS WITH SLOPES EQUAL TO OR FLATTER THAN 4H:1V SHALL BE SEEDED WITH CLASS 'A' SEEDING, EXCEPT FOR THE BOTTOM OF EARTHEN CHANNELS, AND ALL DISTURBED AREAS WITH SLOPES STEEPER THAN 4H:IV SHALL BE SEEDED WITH CLASS 'B' SEEDING, UNLESS OTHERWISE DIRECTED BY THE ENGINEER.
14. CASEMENT SLEEVES AND WATER LINE AND SANITARY SEWER LINE REPLACEMENTS SHALL BE INSTALLED IN ACCORDANCE WITH THE TECHNICAL SPECIFICATIONS OF THE "CITY OF ALBUQUERQUE INTERIM STANDARD SPECIFICATIONS FOR PUBLIC WORKS CONSTRUCTION, 1985 EDITION.

CONCRETE NOTES

1. CONCRETE FOR BOX CULVERT STRUCTURES SHALL BE CLASS 'A' OR 'B' AS NOTED AND SHALL HAVE A SPECIFIED MINIMUM COMPRESSIVE STRENGTH OF 4000 PSI AT 28 DAYS.
2. CONCRETE FOR CHANNEL LINING AND CHANNEL APPURTENANCES SHALL BE CLASS 'E' UNLESS OTHERWISE SPECIFICALLY SHOWN ON THE PLANS.
3. REINFORCING SHALL CONFORM TO THE REQUIREMENTS OF ASTM A615 GRADE 60.
4. UNLESS OTHERWISE NOTED, LAPS, SPLICES OR EMBEDMENT LENGTHS SHALL CONFORM TO TABLE 20.1 ACI MANUAL SP-17 CLASS B SPLICE.
5. UNLESS OTHERWISE NOTED, CONCRETE COVER UNDER STEEL SHALL BE 2" FOR FORMED CONCRETE AND 3" FOR CONCRETE CAST AGAINST EARTH.
6. REINFORCING SHALL BE CONTINUOUS AROUND ALL CORNERS UNLESS SHOWN OTHERWISE.
7. UNLESS OTHERWISE SHOWN, ALL EXPOSED CORNERS SHALL HAVE 3/4" CHAMFER OR TOOLED EDGE AS DIRECTED.
8. CHANNEL REBAR SHALL BE SUPPORTED ON 3 1/2" SAND CHAIRS AT A MAXIMUM SPACING OF 5' PERPENDICULAR TO THE CHANNEL CENTERLINE.

BENCH MARK

CITY OF ALBUQUERQUE
B.M. I-M9 BRASS CAP
S.W. QUADRANT OF INTERSECTION
OF 98th ST. & GIBSON BLVD.
44' WEST FROM CENTER OF 98th
27.5' SOUTH OF ℄ OF GIBSON BLVD.
EL. 5147.80

TBM

BENAVIDES RD. & JENARO ST.
S.E. CURB RETURN (BACK OF CURB)
EL. 5154.93

RECORD DRAWING
Date 6/18/

These drawings have been revised based on field data and every reasonable attempt has been made to depict construction as actually performed.

Hydrologic and System Reference

William Matotan & Associates, "Drainage Management Plan, Western Albuquerque Metropolitan Area", 1975.

Gordon Herkenhoff and Associates, "Preliminary Design Analyses, Westgate Diversion Channels" April, 1980.

Gordon Herkenhoff and Associates, "Interim Design Report, Westgate Diversion Channels", Dec., 1980.

Gordon Herkenhoff and Associates, "Final Design Report, Snow Vista Channel Phase II", July 1982.

Drainage Areas and Design Discharges are shown at Points of Confluence on these Construction Drawings. The hydraulic information is shown for ultimate development.

Hydraulic Profile Legend

Q_{P100} = 100 yr. return frequency discharge
D_N = Normal flow depth
V_N = Normal flow velocity
D_C = Critical flow depth
F_R = Froude Number
n = Manning's friction factor

REACH	1C	1B	2A	2B	2C
PROFILE TYPE	Forewater	Forewater	Filling Basin	Expansion	Transition
Q_{P100} (cfs)	[illegible]	1,100	1,100	1,100	990	990	990
n	0.027	0.035	.013	.013	0.013	0.013	0.013
D or D_N (ft)	2.50	3.00	2.04	1.40	1.40	3.36	3.36	3.10
V or V_N (fps)	[illegible]	3.69	4.92	25.50	25.50	17.77	17.77	19.71
D_C (ft)	[illegible]	[illegible]	–	3.63	3.63	4.80	4.80	4.88
F_R	[illegible]	[illegible]		2.99	2.99	1.71	1.71	2.32
COMMENTS	Ultimate Riprap Lining							

REACH	3A	3B Forewater		3C Supercritical Forewater	3D Transition		3E Supercritical Forewater
PROFILE TYPE	Supercritical	45+58.65	46+63.65		53+50	54+50	
Q_{P100} (cfs)	990	990	850	850	850	850	850
n	0.013	0.013	0.013	0.013	0.013	0.013	0.013
D or D_N (ft)	3.10	3.13	2.81	2.80	2.58	2.69	2.92
V or V_N (fps)	19.71	19.44	19.40	19.41	21.73	22.53	20.20
D_C (ft)	4.88	4.88	4.51	4.51	4.57	4.76	4.76
F_R	2.32	2.28	2.38	2.38	2.76	2.75	2.38
	Superelevation = 0.65'			Superelevation = 0.33'			

26 17230287

AMAFCA

WESTGATE DIVERSION CHANNELS

SNOW VISTA CHANNEL PHASE II

LOCATION MAP & GENERAL NOTES

DRAWN BY A.N
DATE SEPT 1986
SCALE 1" = 1000'

GORDON HERKENHOFF & ASSOCIATES, INC.
ENGINEERS ARCHITECTS PLANNERS
ALBUQUERQUE SANTA FE

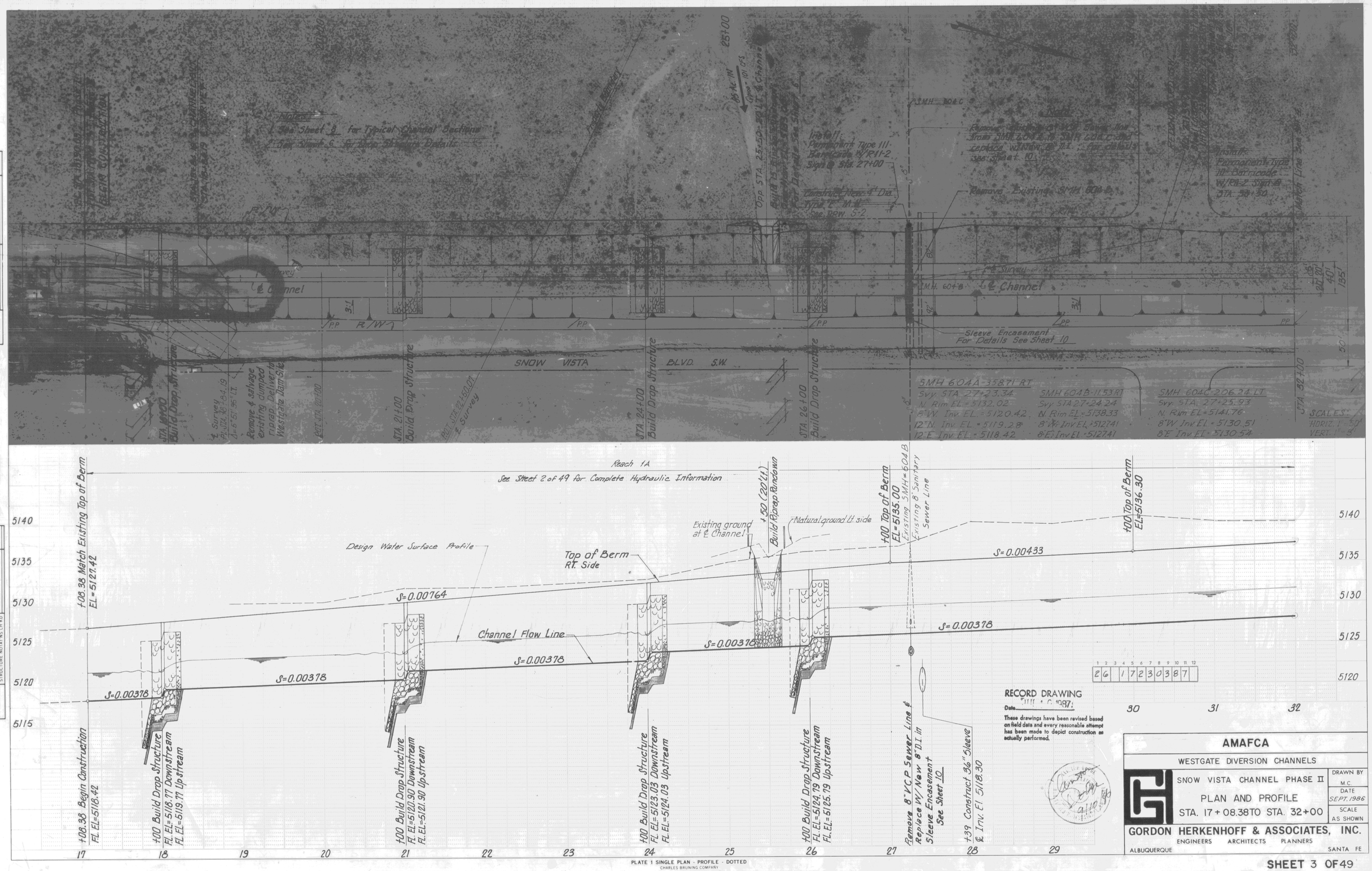

PLATE 1 SINGLE PLAN - PROFILE - DOTTED
CHARLES BRUNING COMPANY
MADE IN U.S.A.

PLAN — SURVEYED: PLOTTED: ALIGNMENT CHECKED: DRAWN: RT OF WAY CHECKED: B.M. NOTED: STRUCTURE NOTATIONS CHKD: NOTE BOOK NO. BY DATE

PROFILE — SURVEYED: PLOTTED: DRAWN: ALIGNMENT CHECKED: B.M. NOTED: STRUCTURE NOTATIONS CHKD: NOTE BOOK NO. BY DATE

PHOTOGRAPHY & PHOTO REPRODUCTION BY KOOGLE & POULS ENGINEERING ESTRA COMPANY, INC. ALBUQUERQUE, N.M. & SYRACUSE

RECORD DRAWING
Date JULY 1 C 1987
These drawings have been revised based on field data and every reasonable attempt has been made to depict construction as actually performed.

1	2	3	4	5	6	7	8	9	10	11	12
2	6		1	7	2	3	0	3	8	7	

AMAFCA

WESTGATE DIVERSION CHANNELS

SNOW VISTA CHANNEL PHASE II

PLAN AND PROFILE

STA. 17+08.38 TO STA. 32+00

DRAWN BY M.C.
DATE SEPT. 1986
SCALE AS SHOWN

GORDON HERKENHOFF & ASSOCIATES, INC.
ENGINEERS ARCHITECTS PLANNERS
ALBUQUERQUE SANTA FE

SHEET 3 OF 49

PHOTOGRAPHY & PHOTO REPRODUCTION BY
KOOGLE & POULS ENGINEERING
10200 CORRAL RD.N.E., ALBUQUERQUE, N.M. 87123

PLAN	BY	DATE
NOTE BOOK NO. ____	SURVEYED ____ PLOTTED ____ ALIGNMENT CHECKED ____ AT OF WAY CHECKED ____	

PROFILE	BY	DATE
NOTE BOOK NO. ____	SURVEYED ____ PLOTTED ____ GRADES CHECKED ____ B. M. NOTED ____ STRUCTURE NOTAT'NS CH'KD ____	

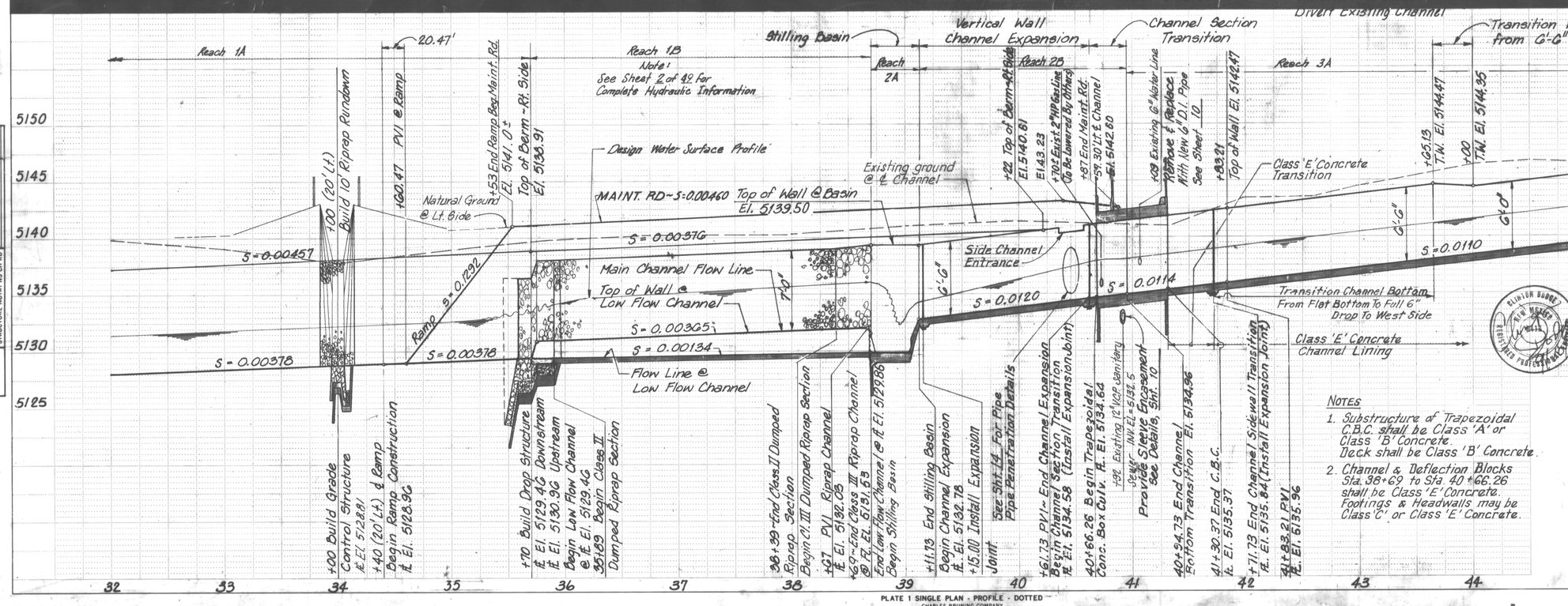

RECORD DRAWING
Date JUN 1 0 1987
These drawings have been revised based on field data and every reasonable attempt has been made to depict construction as actually performed.

Notes

1. Substructure of Trapezoidal C.B.C. shall be Class 'A' or Class 'B' Concrete. Deck shall be Class 'B' Concrete.
2. Channel & Deflection Blocks Sta. 38+69 to Sta. 40+66.26 shall be Class 'E' Concrete. Footings & Headwalls may be Class 'C' or Class 'E' Concrete.

2G 1 7 2 3 0 4 8 7

AMAFCA

WESTGATE DIVERSION CHANNELS

SNOW VISTA CHANNEL PHASE II

PLAN AND PROFILE

STA. 32+00 TO STA. 47+00

DRAWN BY M.C.
DATE SEPT. 1986
SCALE AS SHOWN

GORDON HERKENHOFF & ASSOCIATES, INC.
ENGINEERS ARCHITECTS PLANNERS
ALBUQUERQUE SANTA FE

SHEET 4 OF 49

PLATE 1 SINGLE PLAN - PROFILE - DOTTED
CHARLES BRUNING COMPANY
MADE IN U.S.A.

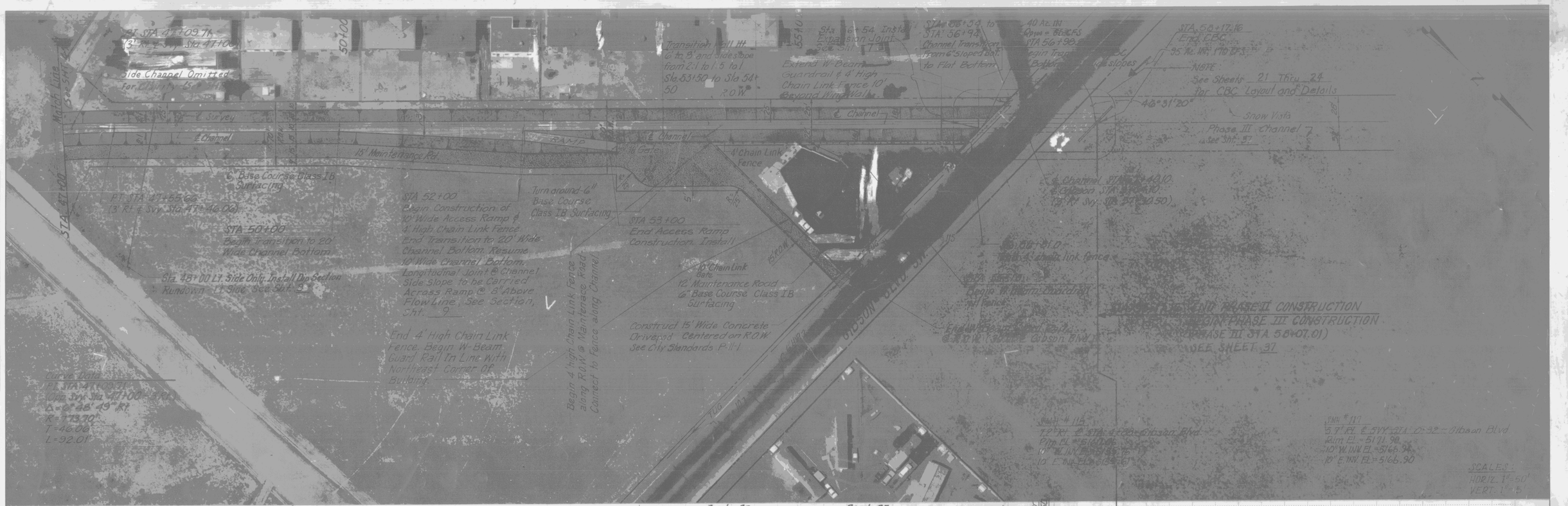

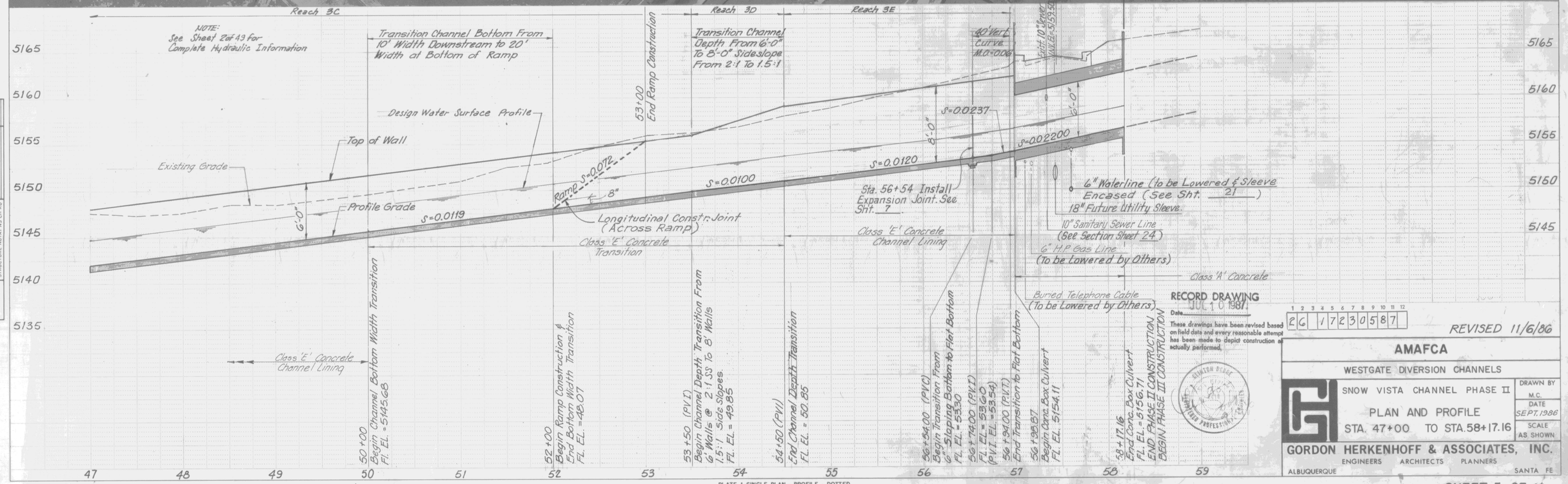

RECORD DRAWING
JUL 10 1987
Date
These drawings have been revised based on field data and every reasonable attempt has been made to depict construction as actually performed.

1 2 3 4 5 6 7 8 9 10 11 12
2 6 1 7 2 3 0 5 8 7

REVISED 11/6/86

AMAFCA

WESTGATE DIVERSION CHANNELS

SNOW VISTA CHANNEL PHASE II

PLAN AND PROFILE

STA. 47+00 TO STA. 58+17.16

DRAWN BY M.C.
DATE SEPT. 1986
SCALE AS SHOWN

GORDON HERKENHOFF & ASSOCIATES, INC.
ENGINEERS ARCHITECTS PLANNERS
ALBUQUERQUE SANTA FE

SHEET 5 OF 49

PLATE 1 SINGLE PLAN - PROFILE - DOTTED
CHARLES BRUNING COMPANY
MADE IN U.S.A.

PLAN
SURVEYED
PLOTTED
COORDS CHECKED
RT. OF WAY CHECKED
NOTE BOOK
NO.
BY
DATE

PROFILE
SURVEYED
PLOTTED
COORDS CHECKED
B.M. NOTED
STRUCTURE NOTATNS CH'KD
NOTE BOOK
NO.
BY
DATE

PHOTOGRAPHS & PLATE REPRODUCTION BY KODGIE & POULIS ENGINEERING
9335A COMANCHE N.E. ALBUQUERQUE, N.M. 87110

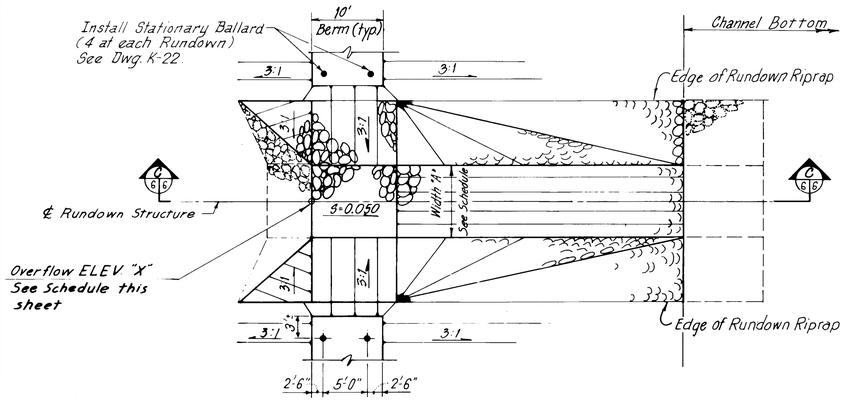

PLAN

CHANNEL RUNDOWN LOCATIONS		
STA.	WIDTH "A"	OVERFLOW ELEV. "X"
25+50	15'	5133.0
34+00	10'	5138.0

NOTE: See Sheets 3 & 4 For RipRap Rundown Locations

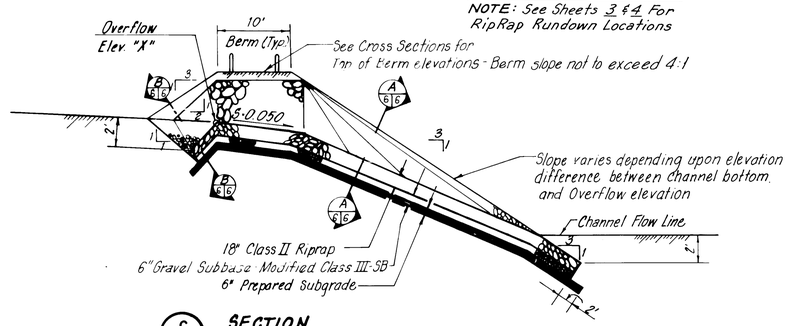

C 6/6 SECTION

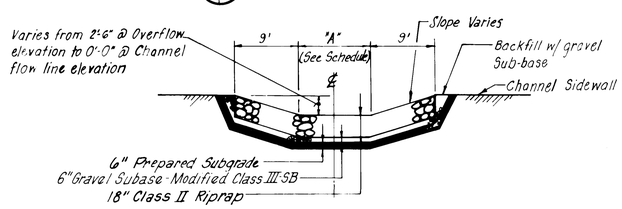

A 6/6 SECTION

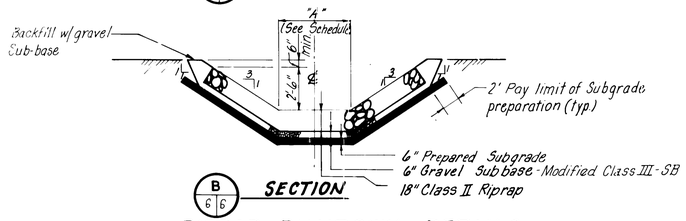

B 6/6 SECTION

RIPRAP RUNDOWN DETAILS

Scale: Horiz: 1" = 10'
Vert: 1" = 5'

GENERAL RIPRAP NOTE:

Fill surface voids of all riprap w/ spalls or Gravel Subbase. (Incidental Construction - no pay item.)

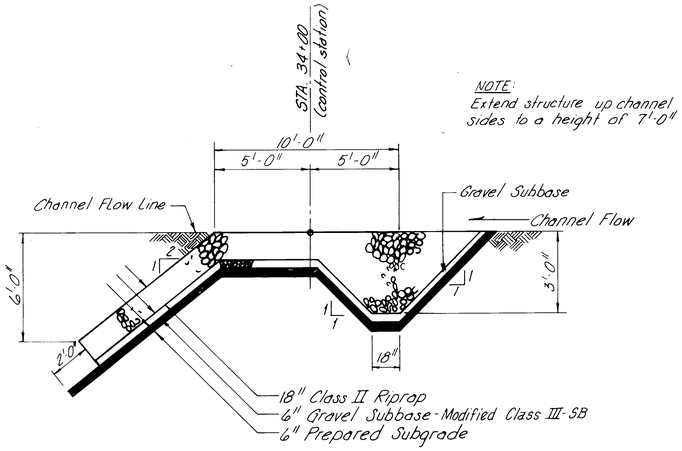

SECTION - RIPRAP GRADE CONTROL STRUCTURE

Scale: 1" = 4'

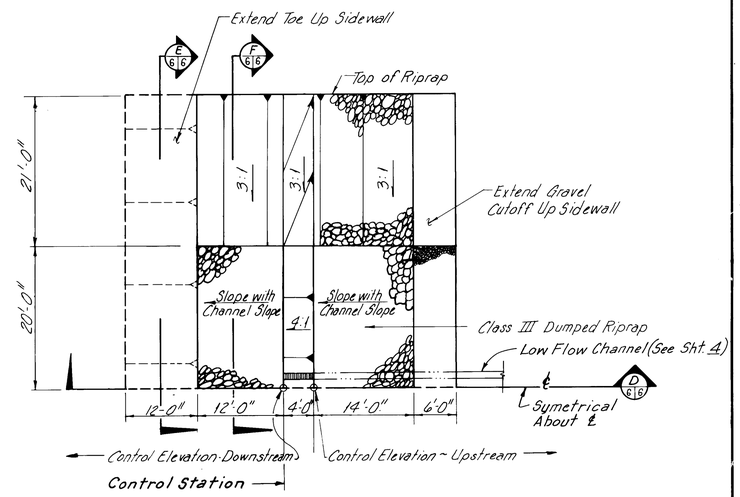

HALF PLAN - RIPRAP DROP STRUCTURE DETAIL

Scale: 1" = 10'

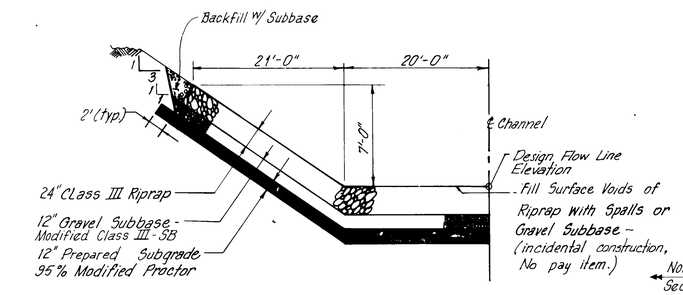

F 6/6 HALF SECTION

Scale: Horiz: 1" = 10'
Vert: 1" = 5'

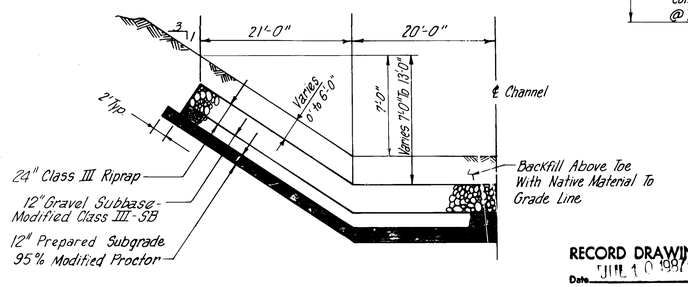

E 6/6 HALF SECTION

Scale: Horiz: 1" = 10'
Vert: 1" = 5'

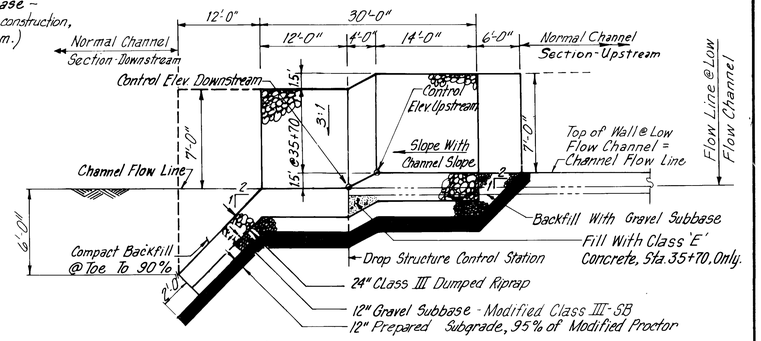

D 6/6 SECTION

Scale: Horiz: 1" = 10'
Vert: 1" = 5'

26 17230687

RECORD DRAWING
Date JUL 10 1997
These drawings have been revised based on field data and every reasonable attempt has been made to depict construction as actually performed

CLINTON BURGE REGISTERED PROFESSIONAL ENGINEER

AMAFCA

WESTGATE DIVERSION CHANNELS

SNOW VISTA CHANNEL PHASE II
DROP STRUCTURE, RUNDOWN, GRADE CONTROL RIPRAP & MISC. DETAILS

DRAWN BY E.L.K.
DATE SEPT 1986
SCALE AS SHOWN

GORDON HERKENHOFF & ASSOCIATES, INC.
ENGINEERS ARCHITECTS PLANNERS
ALBUQUERQUE SANTA FE

BRUNING 34326

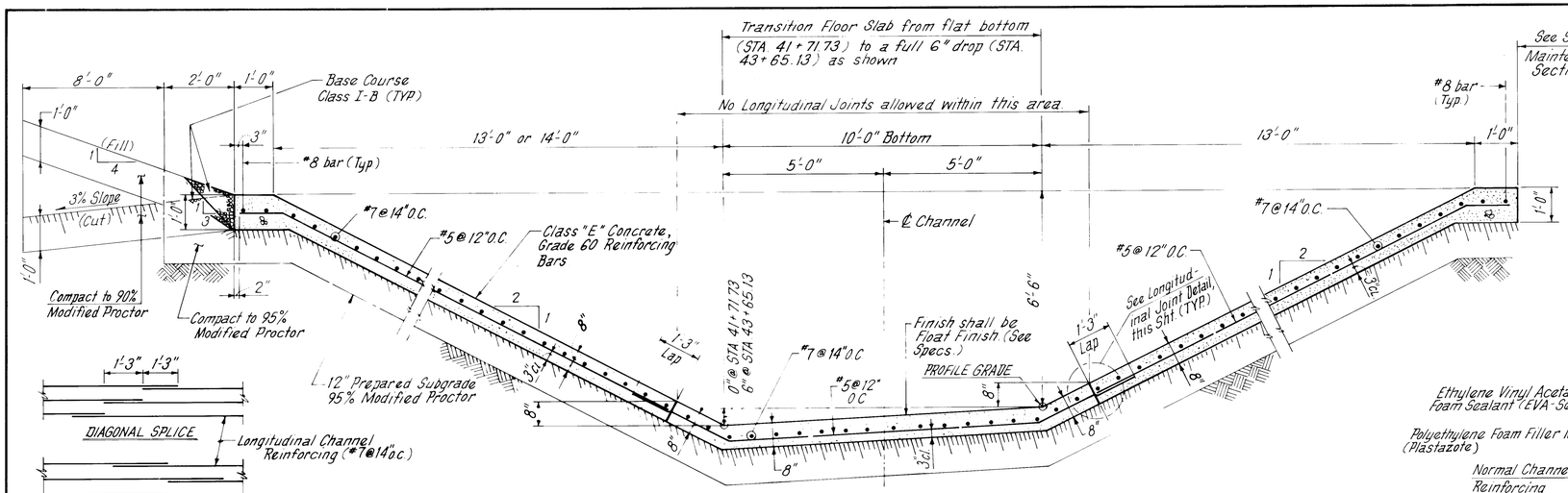

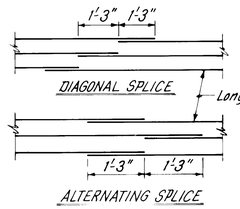

TYPICAL LONGITUDINAL SPLICE

Note: Longitudinal channel reinforcing shall have alternating splice or diagonal splice. (Not req'd for transverse splice.)

TYPICAL CHANNEL SECTION ~ STA. 41+71.73 TO STA. 43+65.13

NOT TO SCALE

REINFORCING SHOWN IS TYPICAL ~ STA. 41+71.73 TO STA. 56+94
SEE SHT. 8 FOR TYPICAL SECTION FROM STA. 43+65.13 AHEAD.

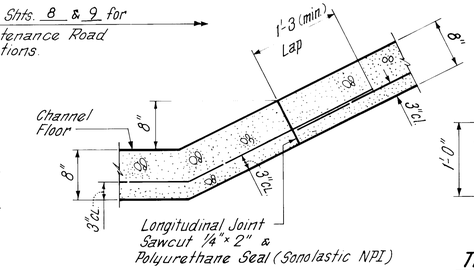

TYPICAL LONGITUDINAL JOINT DETAIL

Scale: 1" = 1'-0"

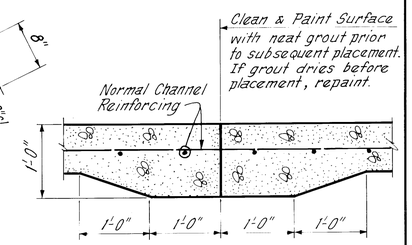

TRANSVERSE CONSTRUCTION JOINT

Scale: 1" = 1'-0"

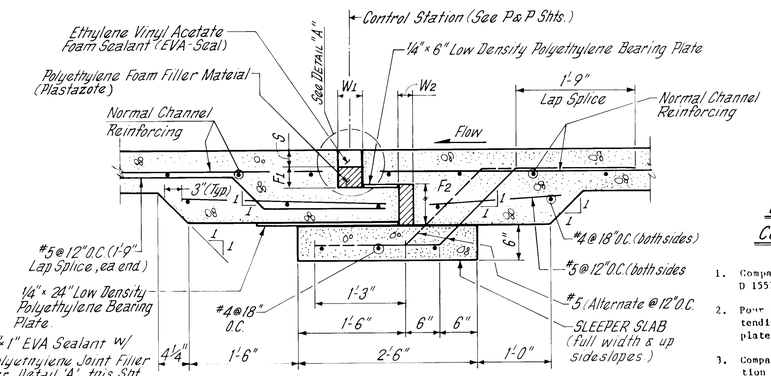

TYPICAL TRANSVERSE EXPANSION JOINT

Not to Scale

EXPANSION JOINT CONSTRUCTION NOTES

1. Compact sleeper subgrade to 90% per ASTM D 1557.
2. Pour sleeper with Z-bar reinforcement extending above slab. Steel trowel bearing plate surface only.
3. Compact subgrade and form downstream portion of joint. Construction joints may be installed a min. of 5 feet upstream and downstream of joint centerline. Place lower bearing plate and downstream reinforcing and make downstream pour. Steel trowel upper bearing plate surface.
4. Compact subgrade and form upstream portion of joint. Place reinforcing steel, upper bearing plate, and upper and lower foam filler material. Upper bearing plate must be parallel to lower bearing plate. Do not anchor foam filler material with nails or bonding agent, but keep flush with poured downstream section. Block out foam sealant notch, clean exposed sleeper surface and make upstream pour.
5. When upstream and downstream concrete has reached a min. of 80% design strength or after a minimum of seven days has elapsed since concrete was poured, remove sealant notch form, sand blast vertical surfaces and clean all debris from notch. Apply Epoxy bonder to both vertical concrete faces and to both sides of foam sealant material. Immediately compress foam sealant into notch. Remove bonder from top surface of sealant material, but do not clean bonder bead along edges.
6. If sealant material extends from 0" to 1/8" above channel flowline, apply ultraviolet paint as specified. If sealant material extends from 1/8" or more above channel flowline, power sand material flush with channel flowline under the direction of the Engineer prior to application of ultra violet paint.

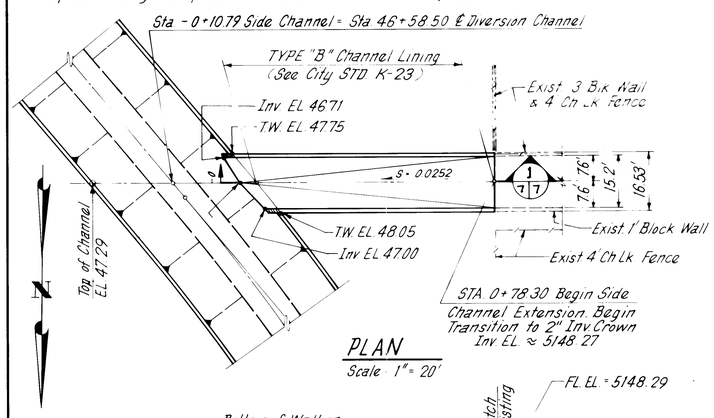

PLAN

Scale: 1" = 20'

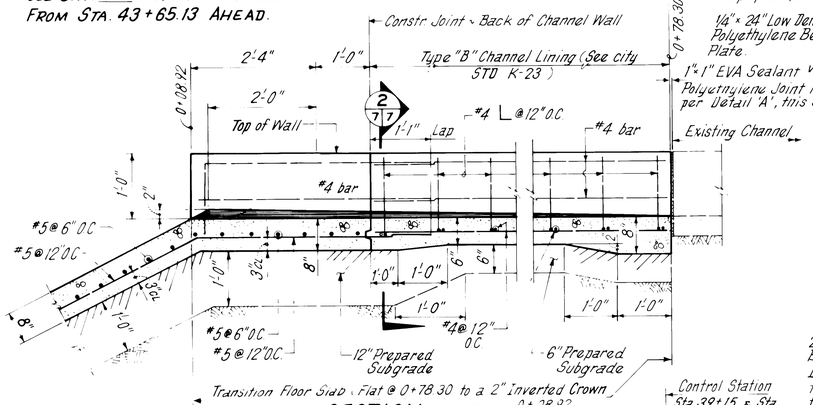

SECTION 1/7

Scale: 3/4" = 1'-0

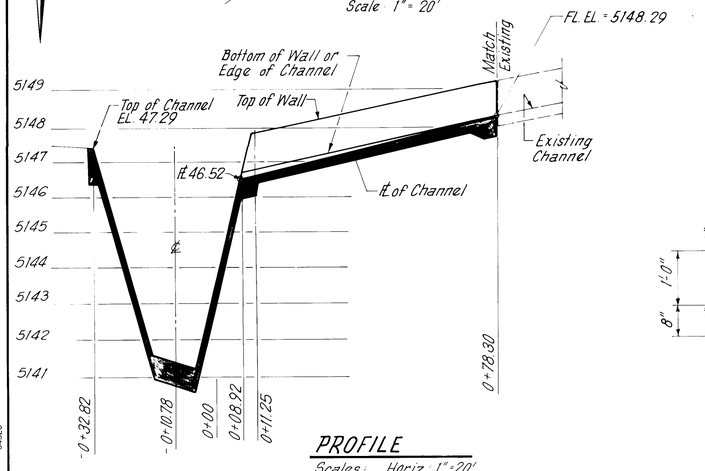

PROFILE

Scales: Horiz. 1" = 20'
Vert. 1" = 2'

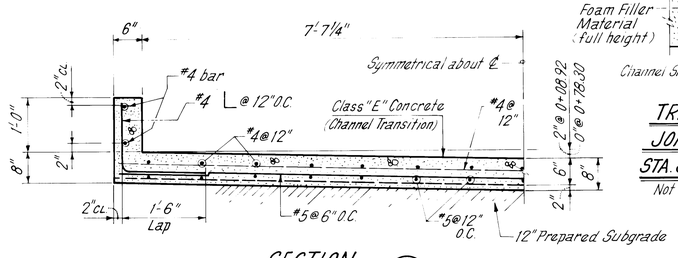

SECTION 2/7

Scale: 3/4" = 1'-0

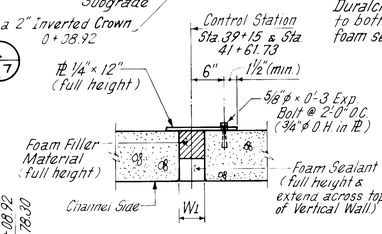

TRANSVERSE EXPANSION JOINT @ VERTICAL WALLS

STA. 39+15 and STA. 40+61.73, ONLY

Not to scale

NOTE: Install PL 1/4" × 12" over expansion joint at top of wall. Anchor with 2-5/8" ϕ × 0'-3" exp. bolts on one side.

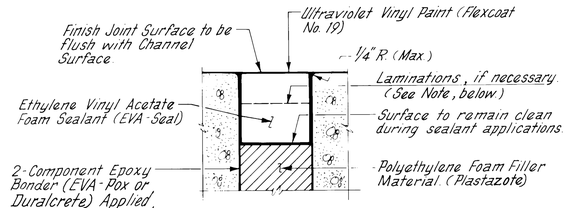

DETAIL "A"

Not to scale

EXPANSION JOINT FILLERS & SEALANT DIMENSIONS

CONTROL STATION	W1	W2	S	F1	F2
Sta. 39+15	4"	3"	3 1/2"	2 3/4"	6"
Sta. 40+61.73	4"	3"	3 1/2"	2 3/4"	6"
Sta. 41+71.73	4"	3"	3 1/2"	2 3/4"	6"
Sta. 56+54	4"	3"	3 1/2"	2 3/4"	6"

NOTE: Order width for Foam Filler Material shall be 25% greater than dimensions of W1, or as shown on Plans. If foam filler is laminated, laminations must be horizontal. Install Evaseal when temperature is 60° or less.

SIDE CHANNEL DETAILS ~ STA. 46+58.50

RECORD DRAWING
Date 11 10 1987
These drawings have been revised based on field data and every reasonable attempt has been made to depict construction as actually performed

REGISTERED PROFESSIONAL ENGINEER

26 17230787

AMAFCA

WESTGATE DIVERSION CHANNELS

SNOW VISTA CHANNEL PHASE II

TYPICAL CONCRETE CHANNEL DETAILS AND SIDE CHANNEL DETAILS - STA. 46+58.50

DRAWN BY H. Smith
DATE SEPT. 1986
SCALE AS SHOWN

GORDON HERKENHOFF & ASSOCIATES, INC.
ENGINEERS ARCHITECTS PLANNERS
ALBUQUERQUE FARMINGTON SANTA FE

BRUNING 34326

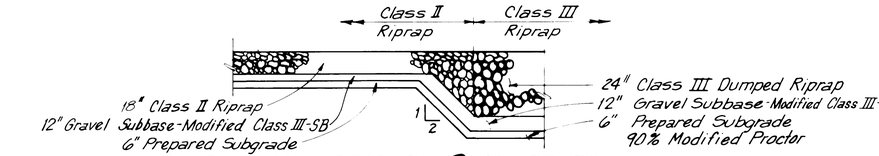

LONGITUDINAL SECTION @ STA. 38+39
(Transition from Class II Riprap to Class III Riprap)
Not to Scale

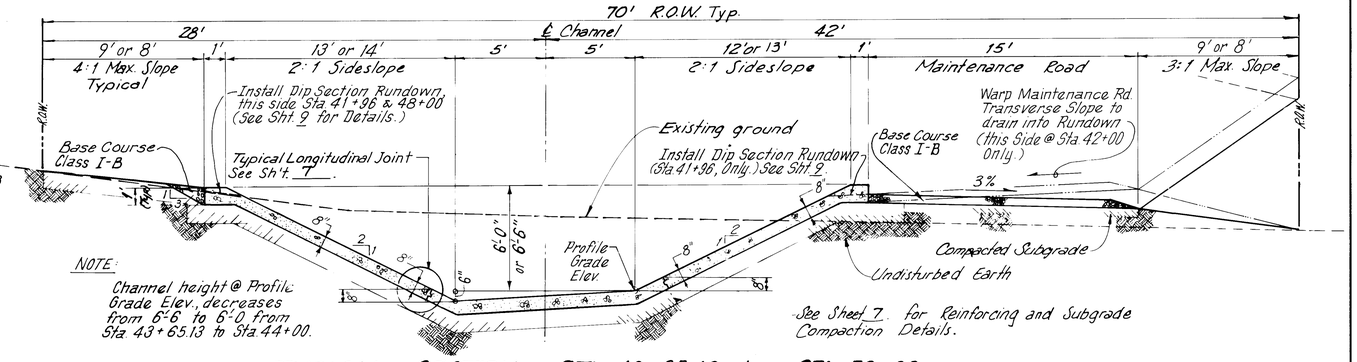

TYPICAL SECTION ~ STA. 43+65.13 to STA. 50+00
Scale: 1/4" = 1'-0"

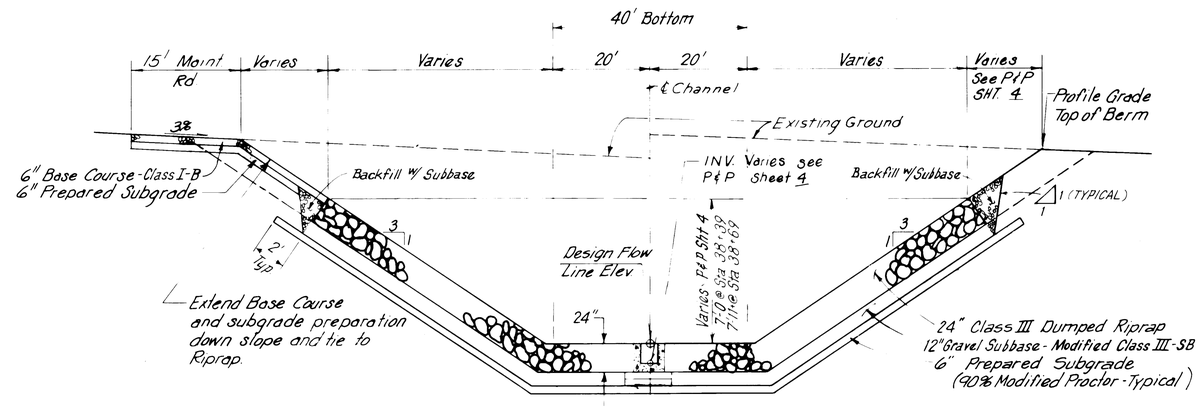

TYPICAL SECTION — CLASS III DUMPED RIPRAP
STA 38+39 to STA 38+69
Not to Scale

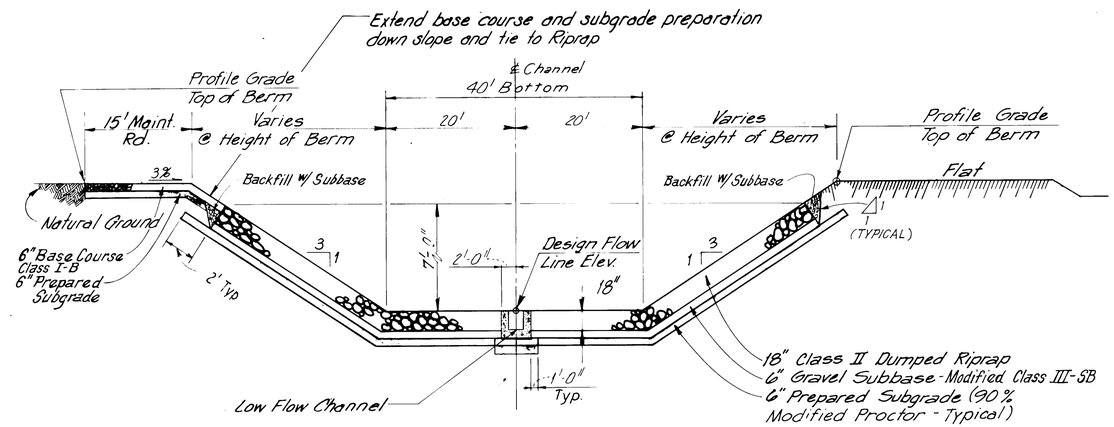

CLASS II DUMPED RIPRAP SECTION
STA 35+89 to STA 38+39 — 40' BOTTOM WIDTH
Not to Scale

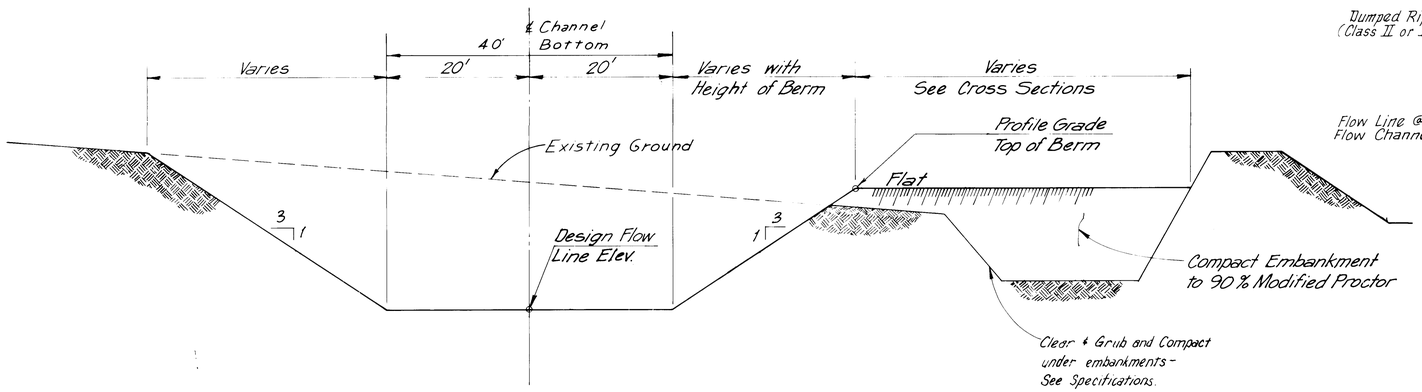

TYPICAL SECTION STA 17+08.38 to STA 35+89
(Left Side in Cut, Right Side in Fill)
Scale: 1" = 1'-0"

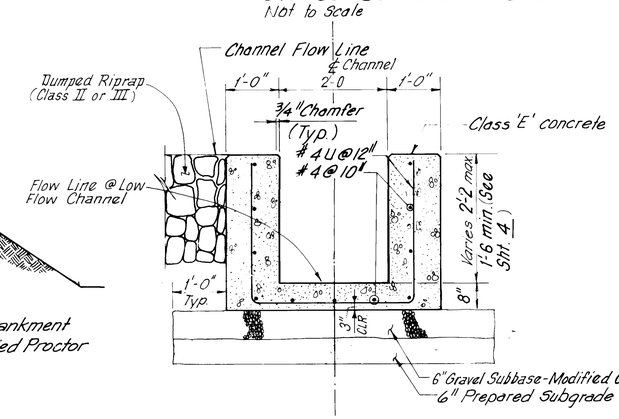

LOW FLOW CHANNEL DETAIL
Not to Scale

RECORD DRAWING
Date JUL 1 0 1987
These drawings have been revised based on field data and every reasonable attempt has been made to depict construction as actually performed

REGISTERED PROFES. ENGINEER
7/10/87

26 1 7 2 3 0 8 8 7

AMAFCA

WESTGATE DIVERSION CHANNELS

SNOW VISTA CHANNEL PHASE II

TYPICAL CHANNEL SECTION DETAILS

DRAWN BY	M.G.
DATE	SEPT 1986
SCALE	AS SHOWN

GORDON HERKENHOFF & ASSOCIATES, INC.
ENGINEERS ARCHITECTS PLANNERS
ALBUQUERQUE SANTA FE

BRUNING 34326

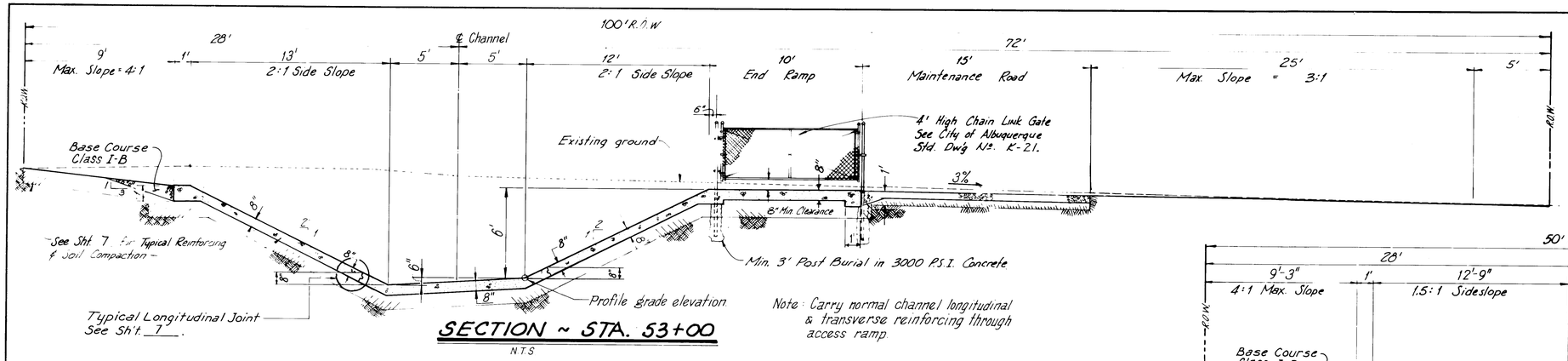

Note: Carry normal channel longitudinal & transverse reinforcing through access ramp.

SECTION ~ STA. 53+00

N.T.S.

GENERAL NOTES

1. Channel Sidewall Height transitions from 6' @ Sta. 53+50 to 8' @ Sta. 54+50. and Sideslope from 2:1 to 1.5:1
2. Sloping Bott. Channel transitions to Flat Bottom Channel from Sta. 56+54 to Sta. 56+94.
3. Bottom Channel Width transitions from 10' @ Sta. 50+00 to 20' @ Sta. 52+00.
4. Right of Way transitions from 70' @ Sta. 50+00 to 80' @ Sta. 52+00.

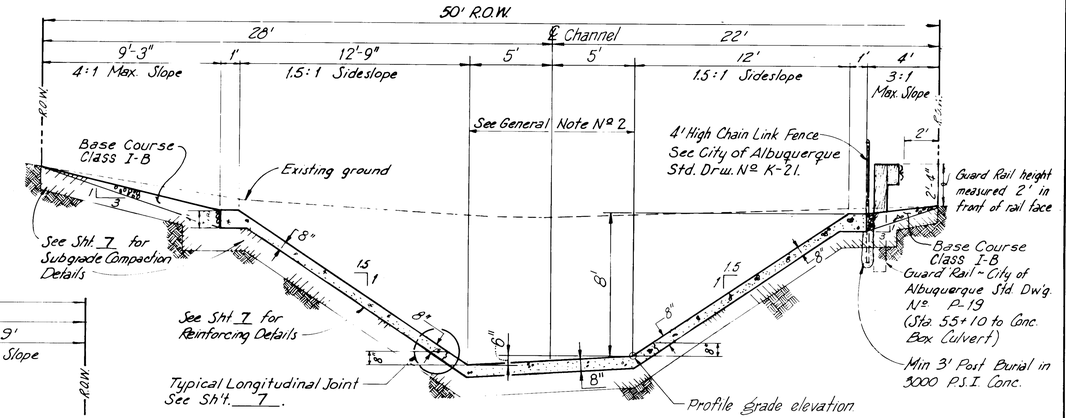

TYPICAL SECTION ~ STA. 54+50 to STA. 56+94

N.T.S.

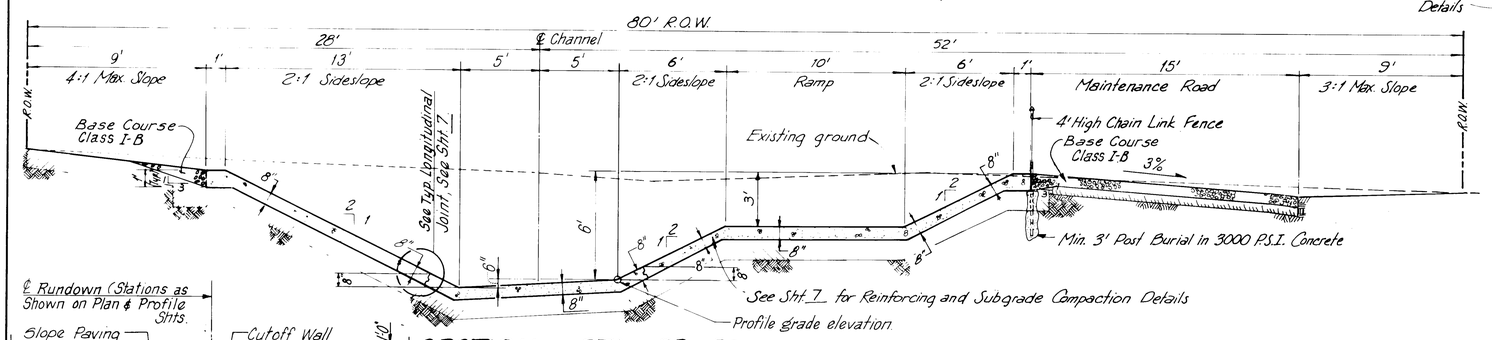

SECTION ~ STA. 52+50

N.T.S.

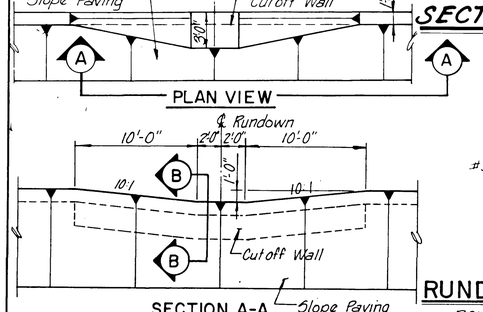

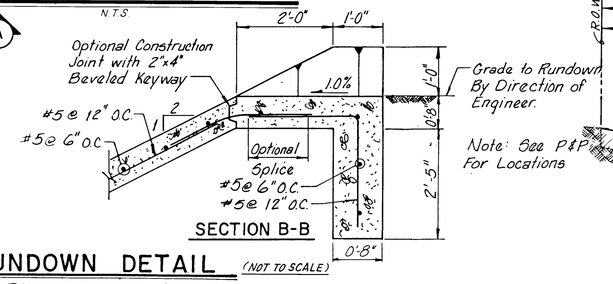

Grade to Rundown By Direction of Engineer.

Note: See P&P For Locations

RUNDOWN DETAIL

(NOT TO SCALE)

R.O.W. Width Varies (70' R.O.W. @ Sta. 50+00, 80' R.O.W. @ Sta. 52+00) ~ See General Note # 4 This Sheet

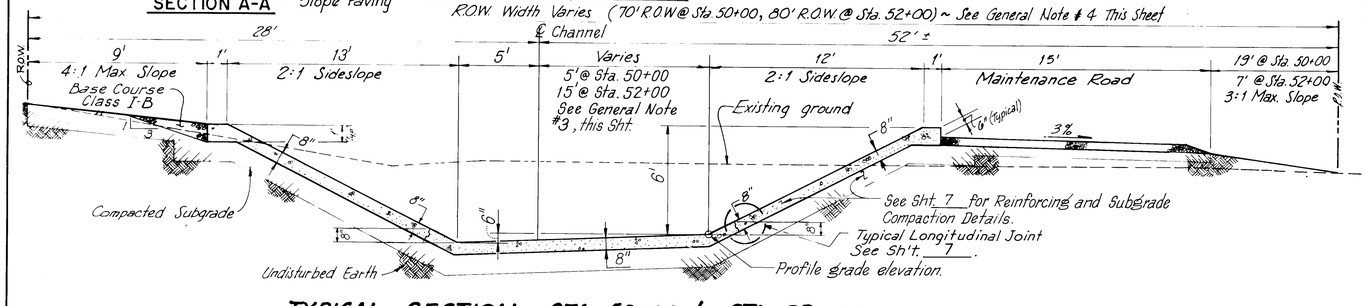

TYPICAL SECTION ~ STA. 50+00 to STA. 52+00

N.T.S.

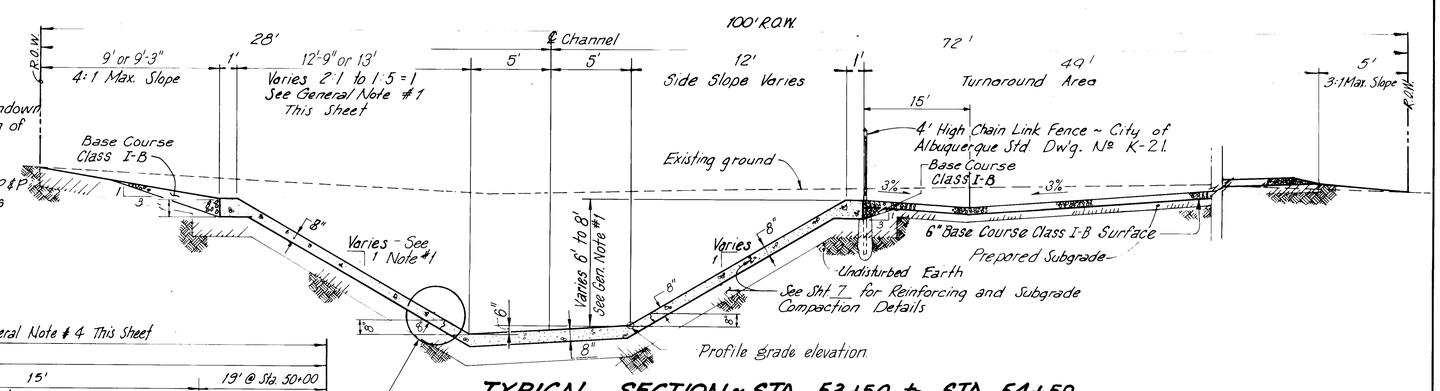

TYPICAL SECTION ~ STA. 53+50 to STA. 54+50

N.T.S.

26 17 23 0987

RECORD DRAWING

Date 11 1 0 1987

These drawings have been revised based on field data and every reasonable attempt has been made to depict construction as actually performed

CLINTON DOUGLAS ALBERT BASICS REGISTERED PROFESSIONAL ENGINEER

AMAFCA

WESTGATE DIVERSION CHANNELS

SNOW VISTA CHANNEL PHASE II

TYPICAL CHANNEL SECTION DETAILS

DRAWN BY K.C.W.

DATE SEPT. 1986

SCALE N.T.S.

GORDON HERKENHOFF & ASSOCIATES, INC.

ENGINEERS ARCHITECTS PLANNERS

ALBUQUERQUE SANTA FE

BRUNING 44 122 34326

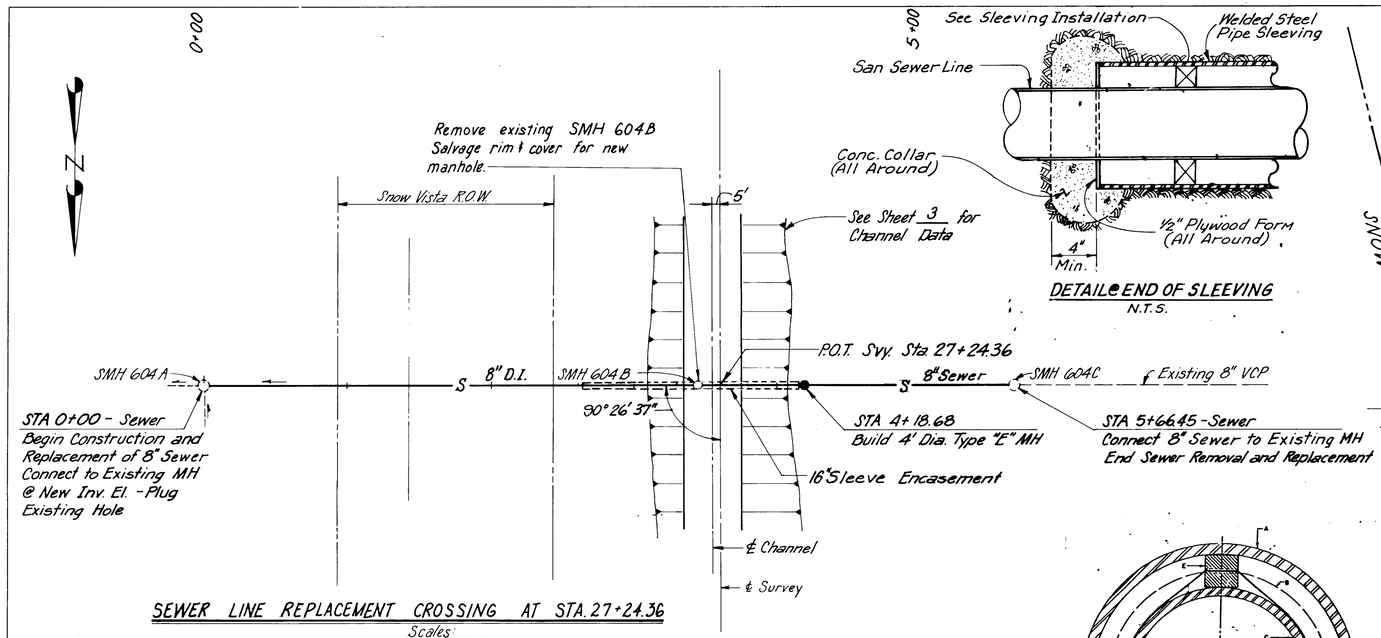

SEWER LINE REPLACEMENT CROSSING AT STA. 27+24.36

Scales:
Horiz. 1"=50'
Vert 1"=5'

SMH 604A
358.71' Rt. Svy. Sta 27+23.34
N. Rim Elev. 5132.02
8" W. Inv. Elev. 5120.42
12" N. Inv. Elev. 5119.28
12" E. Inv. Elev. 5118.42

SMH 604B
11.53' Rt. Svy. Sta 27+24.24
N. Rim Elev. 5138.33
8" W. Inv. Elev. 5127.41
8" E. Inv. Elev. 5127.41

SMH 604C
206.24' Lt. Svy. Sta 27+25.93
N. Rim Elev. 5141.76
8" W. Inv. Elev. 5130.51
8" E. Inv. Elev. 5130.54

DETAIL @ END OF SLEEVING
N.T.S.

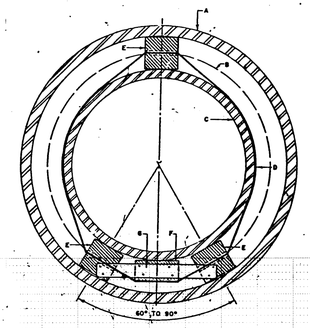

TYPICAL SECTION @ SLEEVING INSTALLATION

CONSTRUCTION NOTES

A. WELDED STEEL PIPE CASING.
B. BELL DIA. OF CARRIER PIPE.
C. CARRIER PIPE - DUCTILE IRON
D. STAINLESS STEEL STRAPS.
E. 3"x3"x18" REDWOOD OR CEDAR SKID BLOCKS, TREATED WITH PENTACHLOROPHENOL, TO BE PLACED AT EACH END OF PIPE SECTIONS AND AT MIDDLE OF EACH SECTION AND SPACED AROUND PIPE AS SHOWN. BLOCKS ARE STRAPPED TOGETHER WITH STAINLESS STEEL STRAPS. STRAPS WILL PASS THROUGH BLOCKS.
F. 2"x4" BLOCK, TREATED REDWOOD OR CEDAR.
G. 1" CLEAT TREATED REDWOOD OR CEDAR.

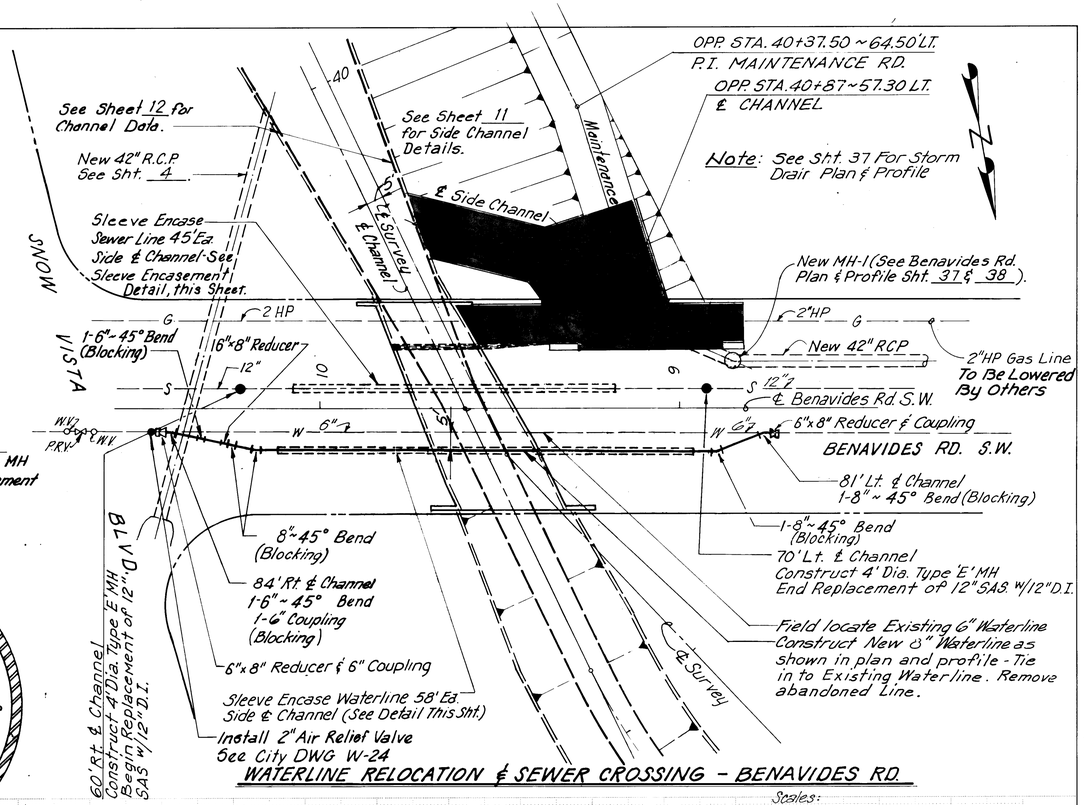

WATERLINE RELOCATION & SEWER CROSSING - BENAVIDES RD.

Scales:
Horiz: 1"=20'
Vert: 1"=5'

NOTE:

1. Pumping of sewer shall be considered incidental to the sewer line construction.

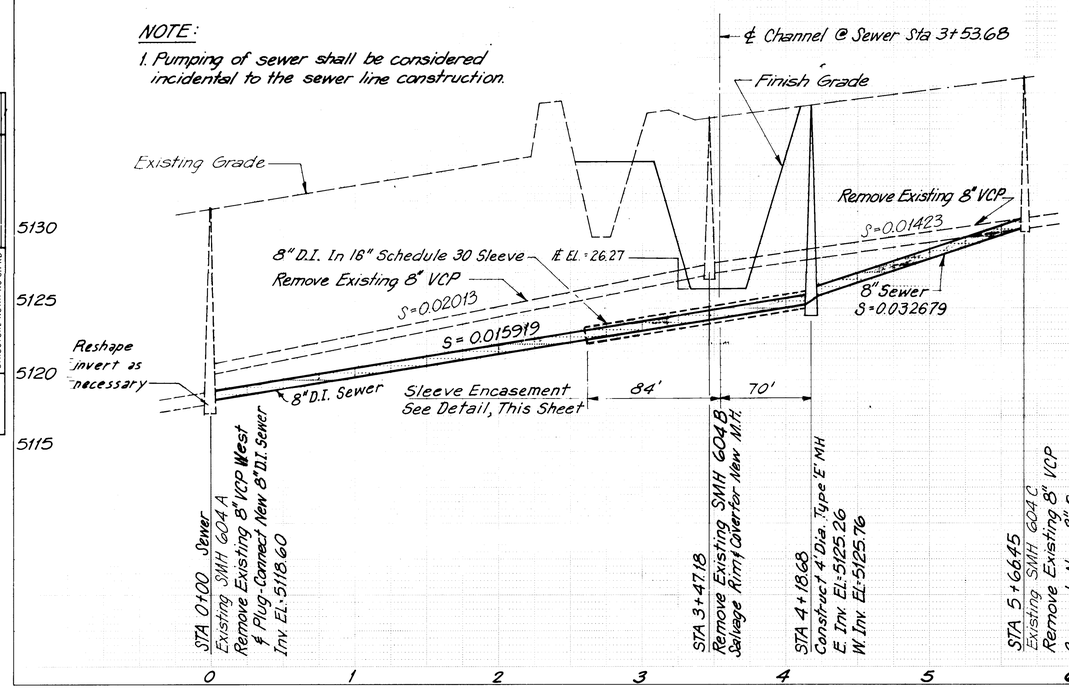

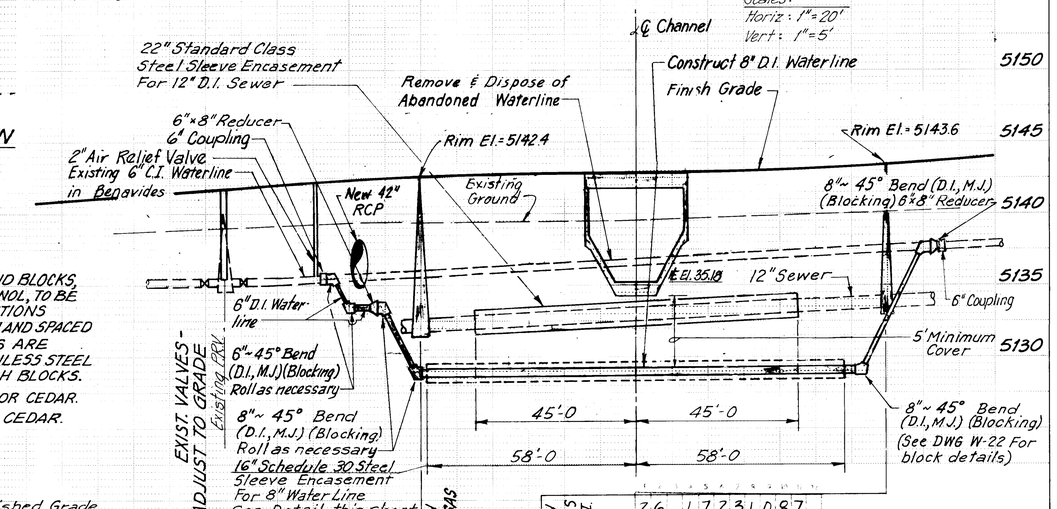

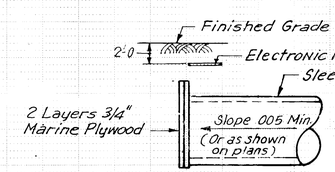

DETAIL @ END OF SLEEVE FOR FUTURE LINES
N.T.S.

RECORD DRAWING
Date July 2 1987
These drawings have been revised based on field data and every reasonable effort has been made to depict construction actually performed

CLINTON BODDE NEW MEXICO 6410 REGISTERED PROFESSIONAL ENGINEER

26 | 17 | 23 | 10 | 87

AMAFCA
WESTGATE DIVERSION CHANNELS
SNOW VISTA CHANNEL PHASE II
WATERLINE RELOCATION
BENAVIDES ROAD &
SANITARY SEWER RELOCATION
STA 27+24.36

DRAWN BY M.G.
DATE SEPT. 1986
SCALE AS SHOWN

GORDON HERKENHOFF & ASSOCIATES, INC.
ENGINEERS ARCHITECTS PLANNERS
ALBUQUERQUE SANTA FE

SHEET 10 OF 49

PLAN — NOTE BOOK — NO. — SURVEYED — PLOTTED — ALIGNMENT CHECKED — R.O.W. MAP CHECKED — BY — DATE

PROFILE — NOTE BOOK — NO. — SURVEYED — PLOTTED — GRADES CHECKED — R.O.W. MAP CHECKED — STRUCTURE NOTATNS CHKD — BY — DATE

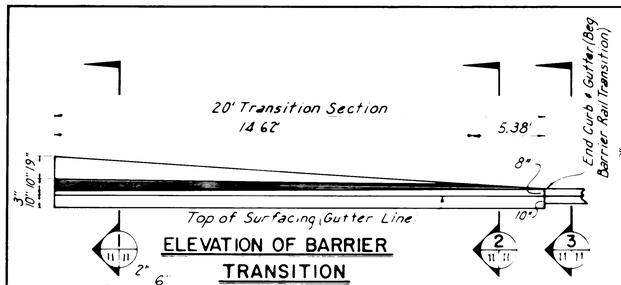

ELEVATION OF BARRIER TRANSITION

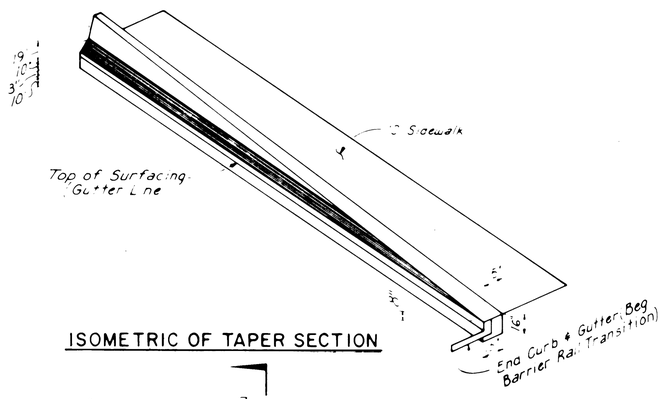

ISOMETRIC OF TAPER SECTION

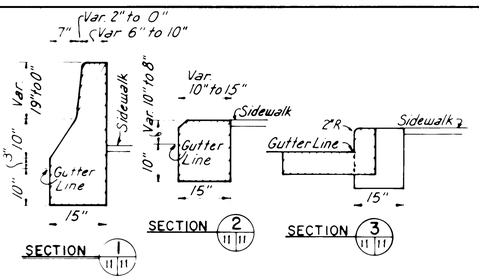

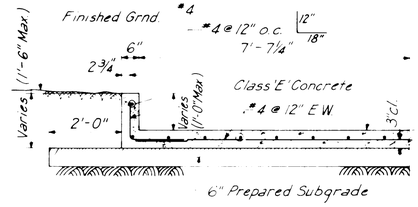

SECTION 6

BENAVIDES SIDE CHANNEL DETAIL

Scale: 1/2" = 1'-0"

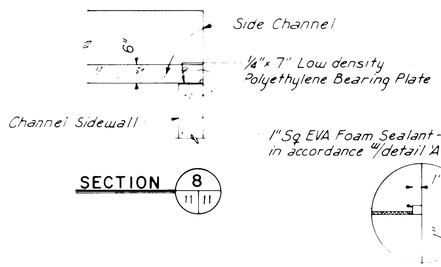

SECTION 8

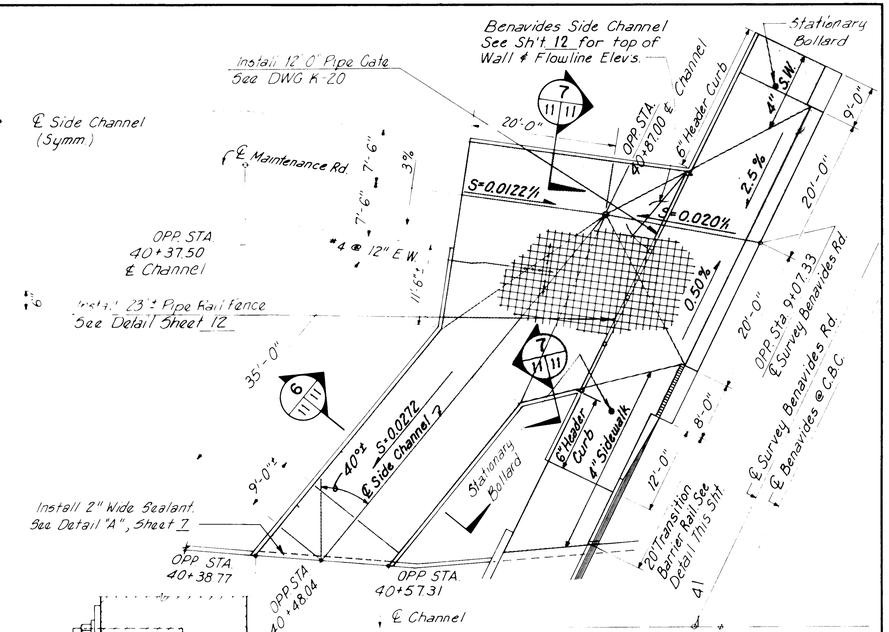

BENAVIDES SIDE CHANNEL-PLAN

Scale: 1" = 10'-0"

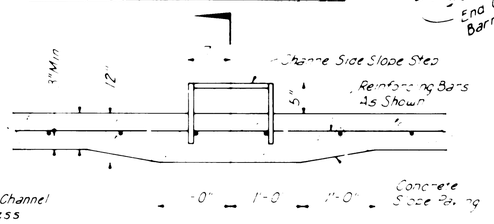

SECTION 4

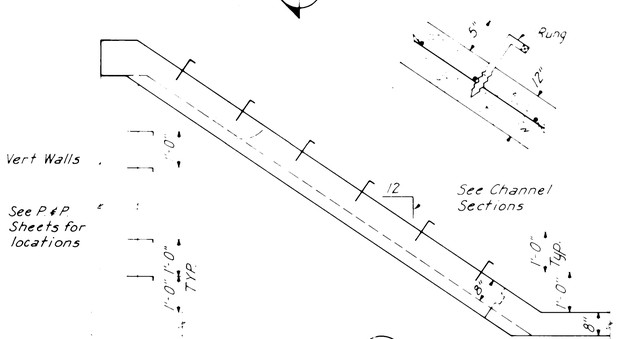

SECTION 4

CHANNEL SIDESLOPE STEP DETAILS

NOTE: Not to scale

Channel steps shall be 1/2" Grade 60 reinforcing rod encapsulated in a co-polymer polypropylene as manufactured by M.A. Indutries, Inc. (Model #P-2-PFS) or equal. Steps shall be installed as recommended by manufacturer after channel placement.

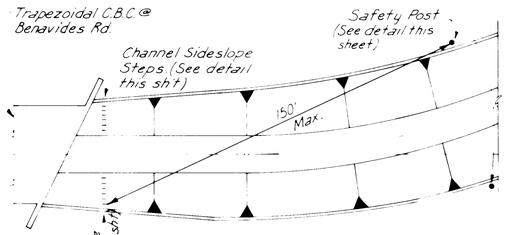

PART PLAN

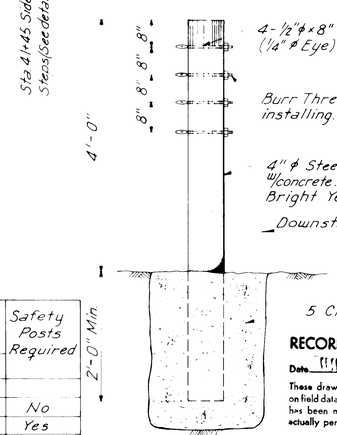

SAFETY POST DETAIL

Not to Scale

CHANNEL STEP LOCATIONS		Safety Posts Required
38+90	Rt. & Lt.	
40+45	Rt. & Lt.	No
41+45	Rt. & Lt.	Yes
47+00	Rt. & Lt.	No
53+00	Rt. & Lt.	No
56+74	Rt. & Lt.	No

RECORD DRAWING

Date 11/1 1 0 1987

These drawings have been revised based on field data and every reasonable attempt has been made to depict construction as actually performed

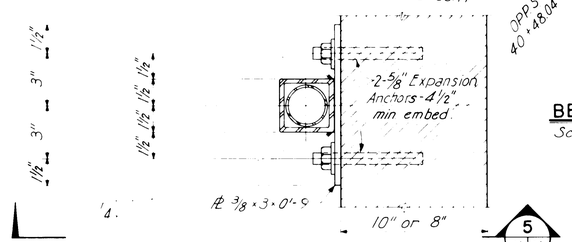

PART PLAN

Scale: 3" = 1'-0"

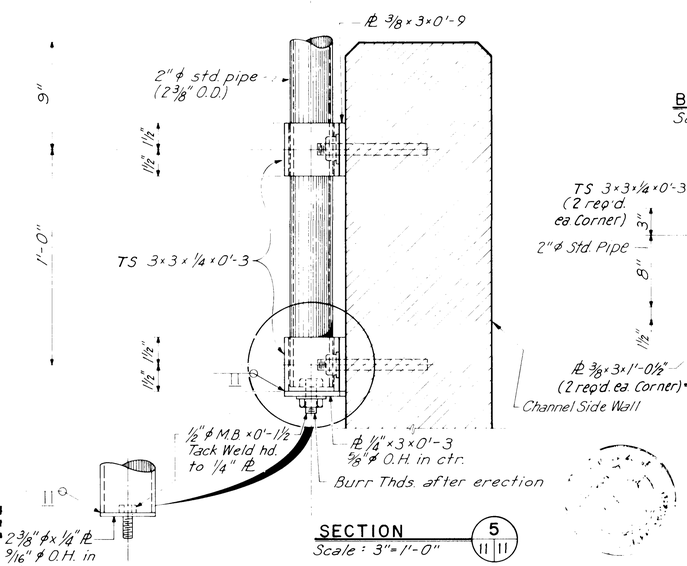

SECTION 5

Scale: 3" = 1'-0"

CHAIN LINK FENCE POST MOUNTING DETAILS

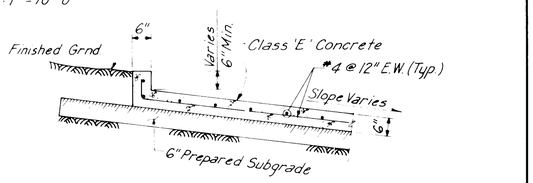

(Typ. all Sections)

SECTION 7

BENAVIDES SIDE CHANNEL DETAIL

Scale: 1/2" = 1'-0"

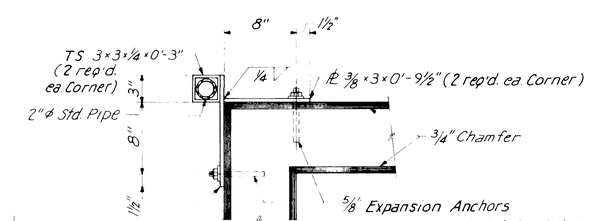

PART PLAN-CORNER

Scale: 1 1/2" = 1'-0"

26 17231187

AMAFCA

WESTGATE DIVERSION CHANNELS

SNOW VISTA CHANNEL PHASE II

MISCELLANEOUS DETAILS

DRAWN BY R.R.M.

DATE Sept. 1986

SCALE As shown

GORDON HERKENHOFF & ASSOCIATES, INC.

ENGINEERS ARCHITECTS PLANNERS

ALBUQUERQUE FARMINGTON SANTA FE

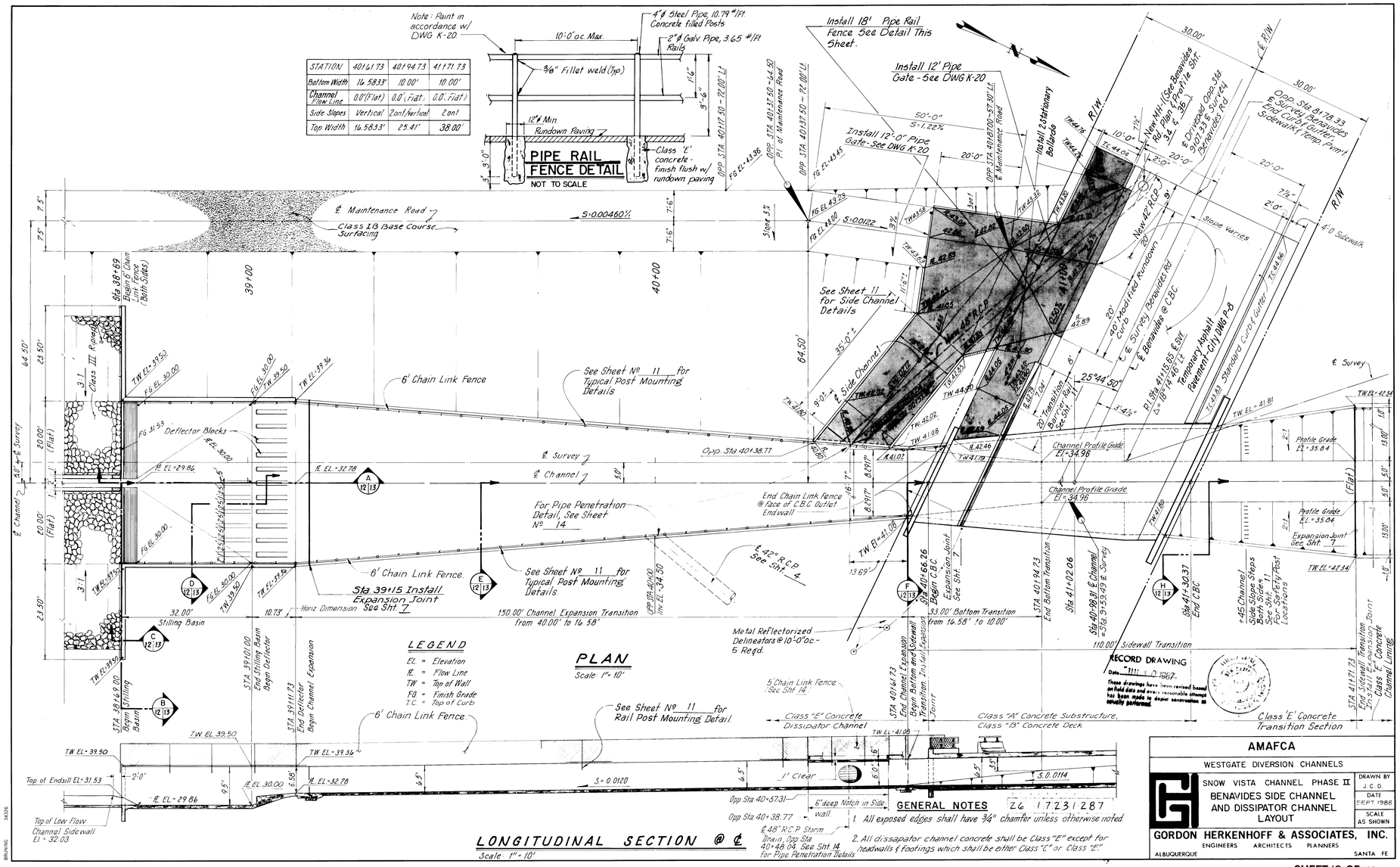
PIPE RAIL FENCE DETAIL
NOT TO SCALE
Note: Paint in accordance w/ DWG K-20
10'-0" o.c. Max.
4" ø Steel Pipe, 10.79 #/ft. Concrete filled Posts
2" ø Galv. Pipe, 3.65 #/ft. Rails
3/8" Fillet weld (Typ.)
12" ø Min. Rundown Paving
Class 'E' concrete - finish flush w/ rundown paving
Install 18' Pipe Rail Fence See Detail This Sheet.
Install 12' Pipe Gate - See DWG K-20
Install 12'-0" Pipe Gate - See DWG K-20
Install 2 Stationary Bollards
℄ Maintenance Road
Class IB Base Course Surfacing
S=0.00460%
S=0.0122
Sta 38+69 Begin 6' Chain Link Fence (Both Sides)
6' Chain Link Fence
See Sheet 11 for Side Channel Details
See Sheet Nº 11 for Typical Post Mounting Details
Deflector Blocks
Opp. Sta 40+38.77
℄ Survey
℄ Channel
For Pipe Penetration Detail, See Sheet Nº 14
End Chain Link Fence @ face of C.B.C. Outlet Endwall
℄ 42" R.C.P. See Sht. 14
Sta 39+15 Install Expansion Joint See Sht. 7
Horiz. Dimension See Sht. 7
150.00' Channel Expansion Transition from 40.00' to 16.58'
93.00' Bottom Transition from 16.58' to 10.00'
110.00' Sidewalk Transition
Stilling Basin
Metal Reflectorized Delineators @ 10'-0" o.c. - 5 Req'd.
See Sheet Nº 11 for Rail Post Mounting Detail
5' Chain Link Fence (See Sht. 14)
Class "E" Concrete Dissipator Channel
Class "A" Concrete Substructure, Class "B" Concrete Deck
Class 'E' Concrete Transition Section
Sta 40+66.26 Begin C.B.C.
Sta 41+02.06 End Bottom Transition
Sta 41+30.37 End C.B.C.
Sta 40+88.31 ℄ Channel = Sta 3+53.45 ℄ Survey
+45 Channel Side Slope Steps Both Sides See Sht. 11 For Safety Post Locations
Channel Profile Grade El.=34.96
Profile Grade El.=35.64
Expansion Joint See Sht. 7
Temporary Asphalt Pavement - City DWG P-8
Standard Curb & Gutter
New 42" RCP
New MH (See Benavides Rd. Plan & Profile Sht.)
℄ Driveway Opp. Sta 9+01.33 ℄ Survey
Opp. Sta 8+78.33 ℄ Survey, Benavides End Curb & Gutter - Sidewalk & Temp. Pvmt
4' ø Sidewalk
R/W
Slope Varies
Top of Endsill El.=31.53
Top of Low Flow Channel Sidewalk El.=32.03
S=0.0120
S=0.0114
1' Clear
6" deep Notch in Side wall
℄ 48" R.C.P. Storm Drain, Opp. Sta 40+48.04 See Sht. 14 for Pipe Penetration Details
LONGITUDINAL SECTION @ ℄
Scale: 1" = 10'
LEGEND
EL = Elevation
fl. = Flow Line
TW = Top of Wall
FG = Finish Grade
T.C. = Top of Curb
PLAN
Scale: 1" = 10'
RECORD DRAWING
Date 11/1/87
These drawings have been revised based on field data and every reasonable attempt has been made to depict construction as actually performed.
GENERAL NOTES
1. All exposed edges shall have 3/4" chamfer unless otherwise noted
2. All dissapator channel concrete shall be Class "E" except for headwalls & footings which shall be either Class "C" or Class "E".
26 17231287
AMAFCA
WESTGATE DIVERSION CHANNELS
SNOW VISTA CHANNEL PHASE II
BENAVIDES SIDE CHANNEL AND DISSIPATOR CHANNEL LAYOUT
DRAWN BY J.C.D.
DATE SEPT. 1986
SCALE AS SHOWN
GORDON HERKENHOFF & ASSOCIATES, INC.
ENGINEERS ARCHITECTS PLANNERS
ALBUQUERQUE SANTA FE

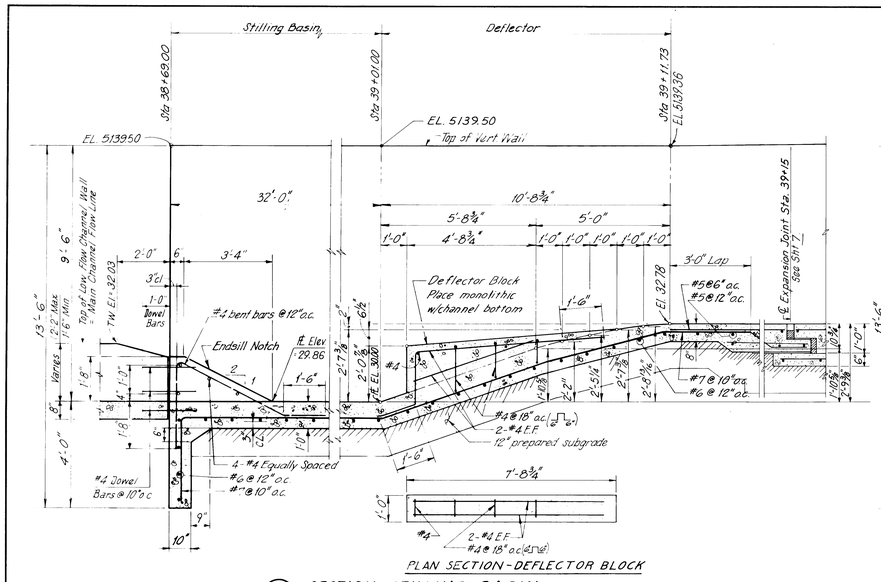

PLAN SECTION-DEFLECTOR BLOCK

A 12|13 SECTION-STILLING BASIN

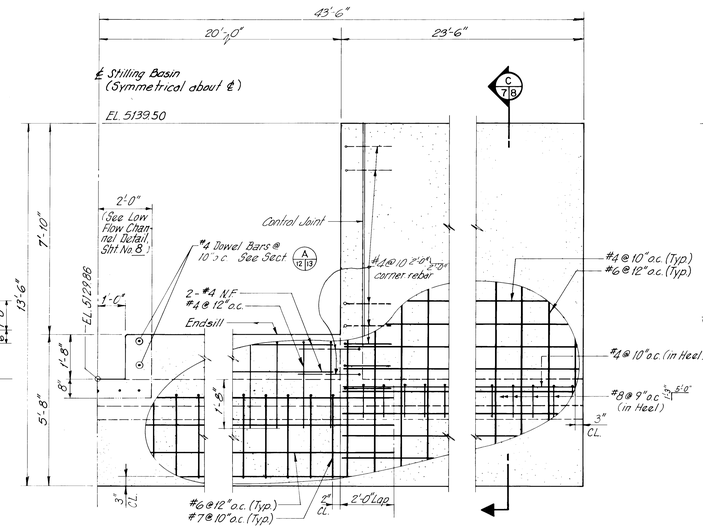

B 12|13 HEADWALL ELEVATION

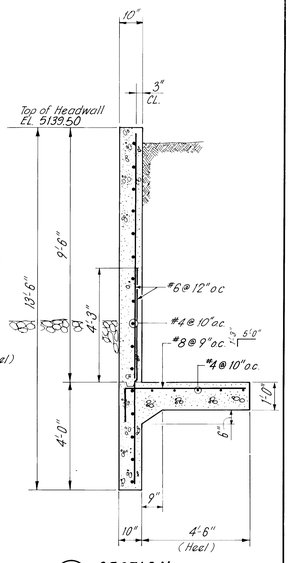

C 12|13 SECTION

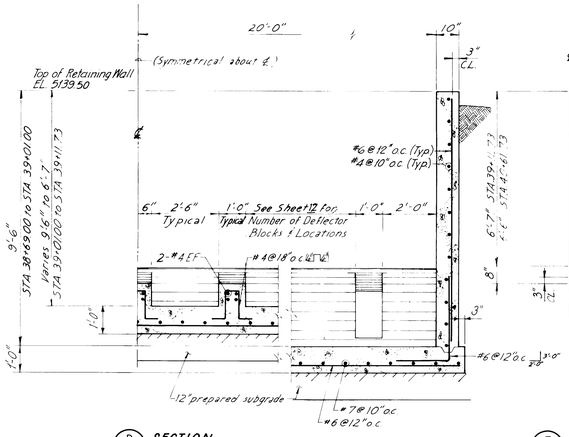

D 12|13 SECTION
STA 38+69.00 to STA 39+11.73

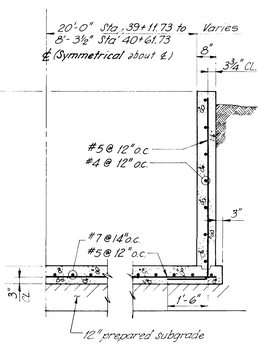

E 12|13 SECTION
STA 39+11.73 to STA 40+61.73

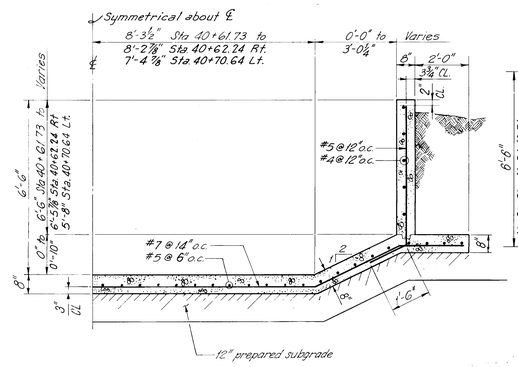

F 12|13 SECTION
STA 40+61.73 to STA 40+77.79

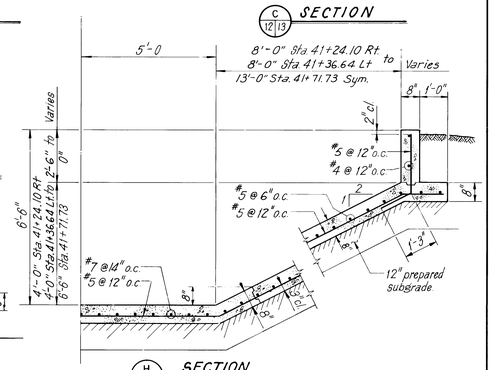

H 12|13 SECTION
STA. 41+24.10 to STA. 41+71.73

26 17231387

RECORD DRAWING
Date: MAY 1 0 1987

These drawings have been revised based on field data and every reasonable attempt has been made to depict construction as actually performed.

AMAFCA	
WESTGATE DIVERSION CHANNELS	
SNOW VISTA CHANNEL PHASE II CHANNEL DISSIPATOR DETAILS AND SECTIONS	DRAWN BY M G DATE Sept. 1986 SCALE 1/2" = 1'-0"
GORDON HERKENHOFF & ASSOCIATES, INC. ENGINEERS ARCHITECTS PLANNERS ALBUQUERQUE SANTA FE	

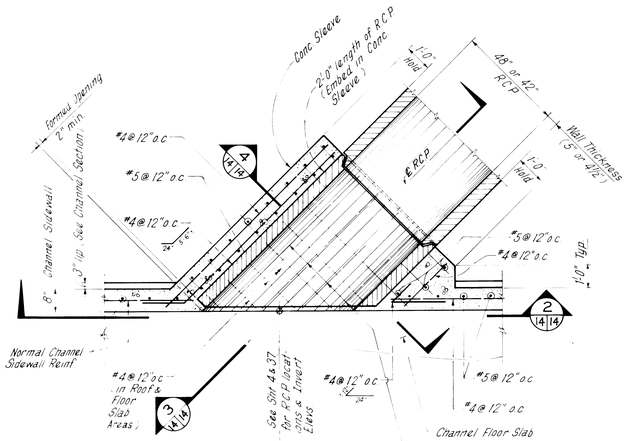

1 | 14 | 14 SECTION
Scale 1/2" = 1'-0"

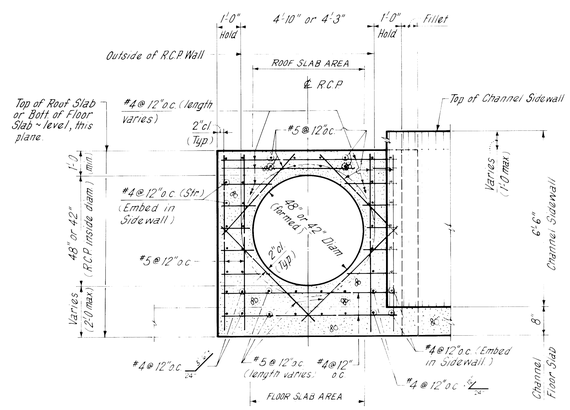

4 | 14 | 14 SECTION
Scale 1/2" = 1'-0"

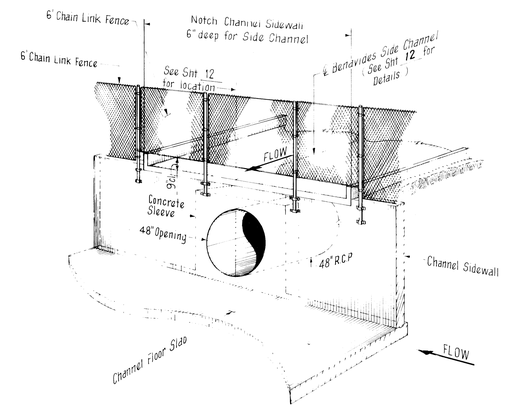

PERSPECTIVE VIEW @ SIDE CHANNEL ENTRANCE
Not to Scale

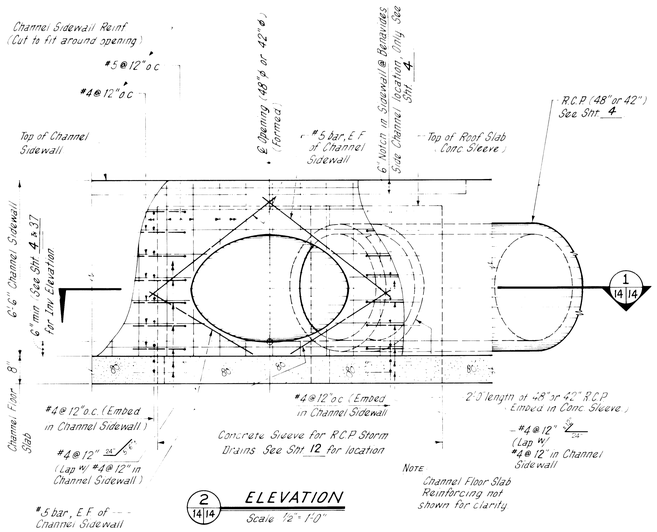

2 | 14 | 14 ELEVATION
Scale 1/2" = 1'-0"

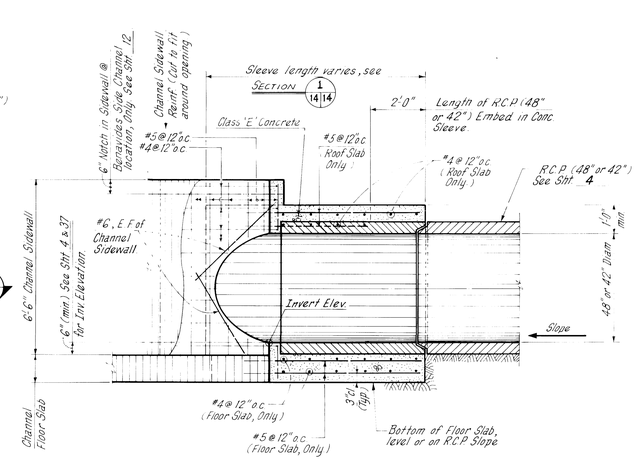

3 | 14 | 14 SECTION
Scale 1/2" = 1'-0"

PIPE PENETRATION DETAILS

NOTE: Place 2-layers of bituminized felt roofing paper on top of roof slab for 48" R.C.P. penetration prior to placing Benavides side channel.

RECORD DRAWING
Date: [illegible]
These drawings have been revised based on field data and every reasonable attempt has been made to depict construction as actually performed.

26 1 7231 487

AMAFCA
WESTGATE DIVERSION CHANNELS
SNOW VISTA CHANNEL PHASE II
PIPE PENETRATION DETAILS

DRAWN BY	[illegible]
DATE	SEPT. 1986
SCALE	AS SHOWN

GORDON HERKENHOFF & ASSOCIATES, INC.
ENGINEERS ARCHITECTS PLANNERS
ALBUQUERQUE FARMINGTON SANTA FE

BR-NING 34326

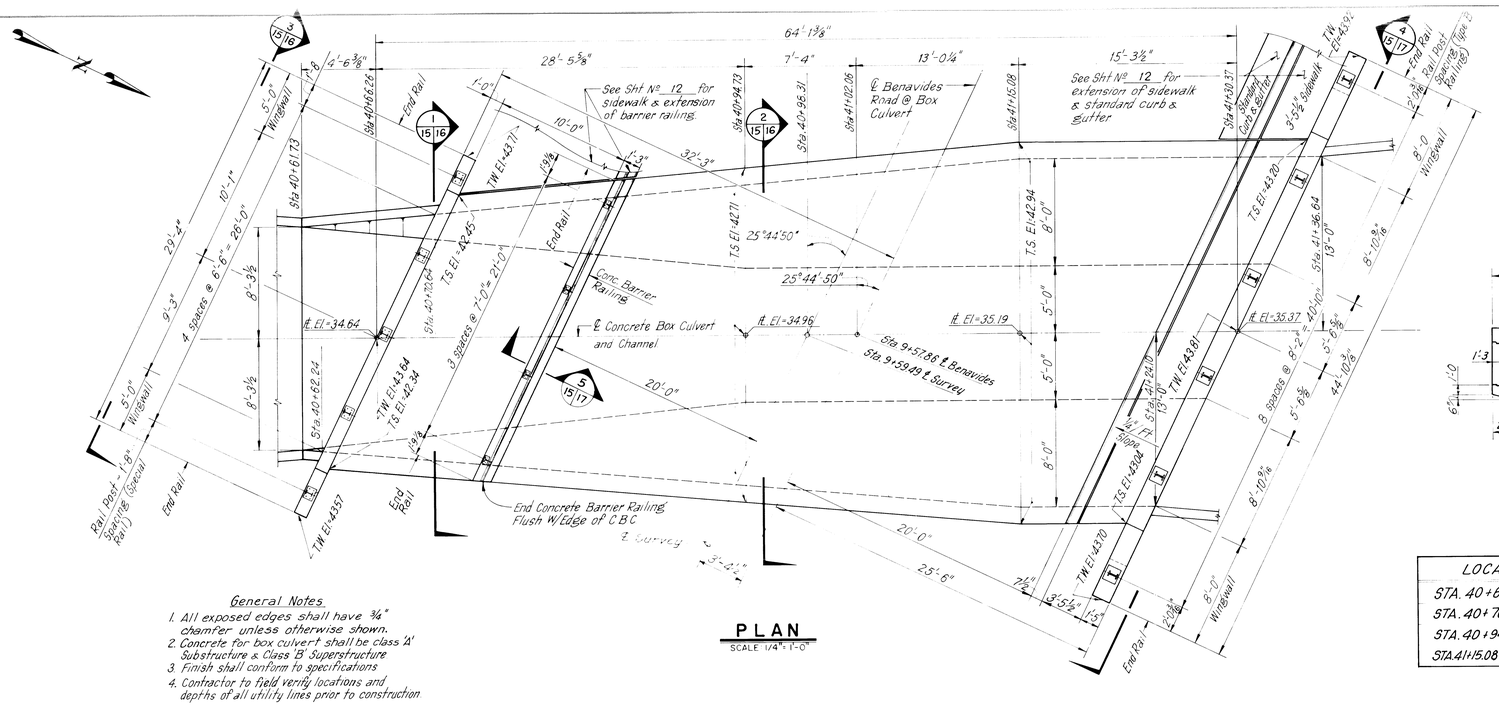

PLAN

SCALE: 1/4" = 1'-0"

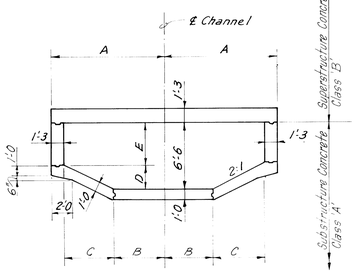

C.B.C. DIMENSIONS

LOCATION	A	B	C	D	E
STA. 40+62.24	9'-7	8'-2⅞	0'-1⅞	0'-0⅞	6'-5⅛
STA. 40+70.64	10'-3⅞	7'-4⅞	1'-8	0'-10	5'-8
STA. 40+94.73	12'-5½	5'-0	6'-2½	3'-1¼	3'-4¾
STA. 41+15.08 TO STA. 41+36.64	14'-3	5'-0	8'-0	4'-0	2'-6

General Notes

1. All exposed edges shall have ¾" chamfer unless otherwise shown.
2. Concrete for box culvert shall be class 'A' Substructure & Class 'B' Superstructure
3. Finish shall conform to specifications
4. Contractor to field verify locations and depths of all utility lines prior to construction.

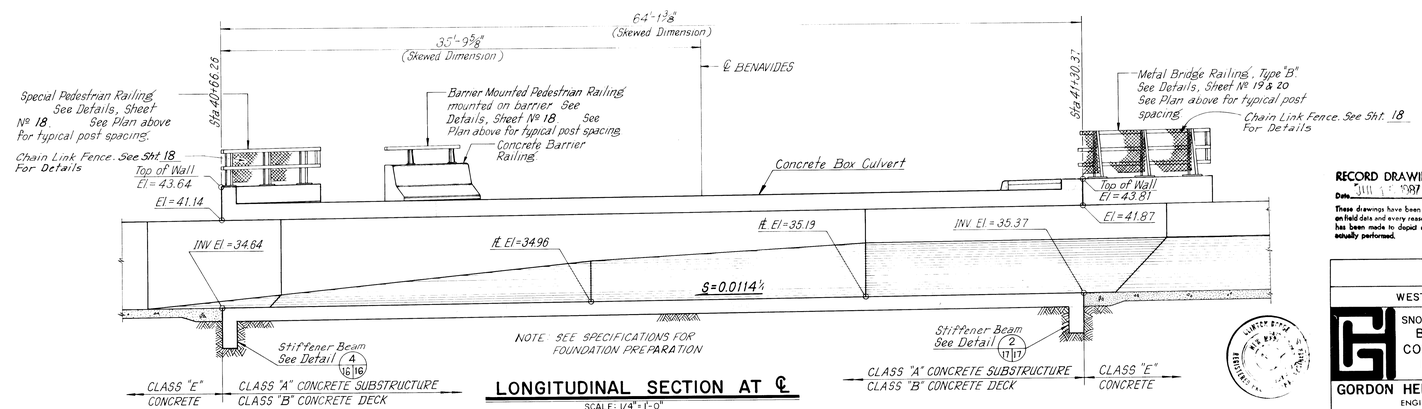

LONGITUDINAL SECTION AT ℄

SCALE: 1/4" = 1'-0"

RECORD DRAWING

Date JUL 1 7 1987

These drawings have been revised based on field data and every reasonable attempt has been made to depict construction as actually performed.

26 17 23 15 87

AMAFCA

WESTGATE DIVERSION CHANNELS

SNOW VISTA CHANNEL PHASE II
BENAVIDES ROAD
CONCRETE BOX CULVERT
PLAN AND SECTION

DRAWN BY	V.R.V.
DATE	SEPT. 1986
SCALE	AS SHOWN

GORDON HERKENHOFF & ASSOCIATES, INC.
ENGINEERS ARCHITECTS PLANNERS
ALBUQUERQUE FARMINGTON SANTA FE

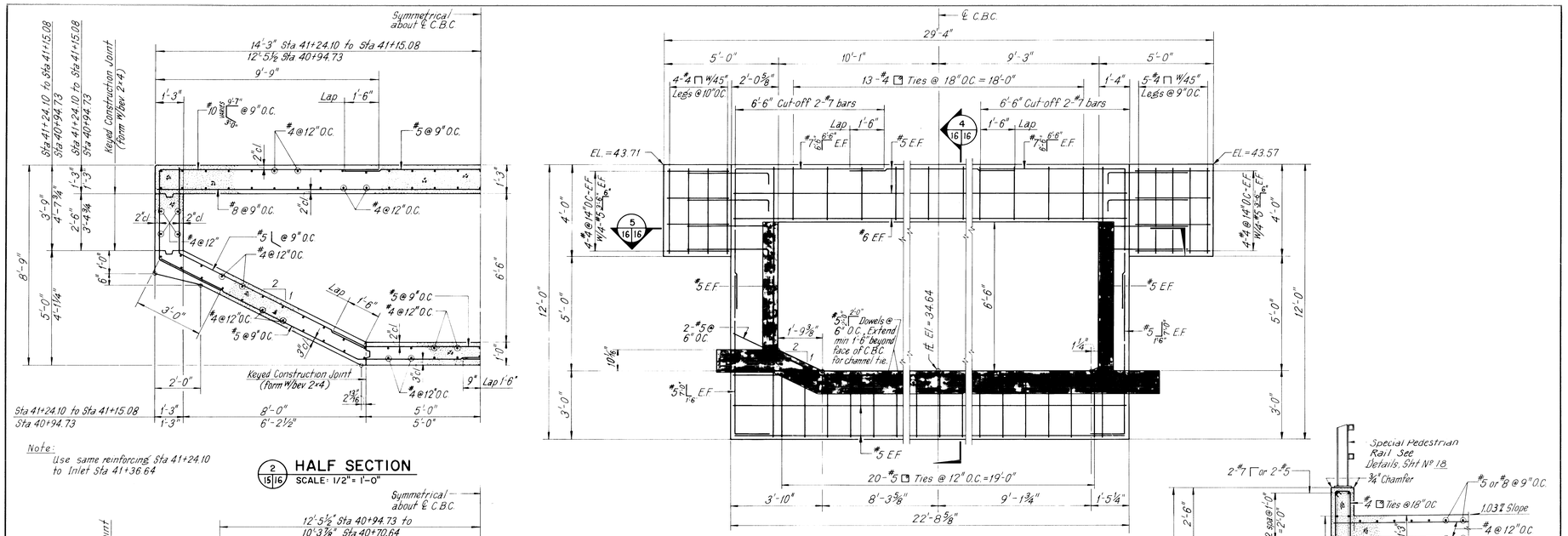

Note:
Use same reinforcing Sta 41+24.10 to Inlet Sta 41+36.64

2/15|16 HALF SECTION
SCALE: 1/2" = 1'-0"

3/15|16 ELEVATION AT OUTLET
SCALE: 1/2" = 1'-0"

4/16|16 SECTION AT OUTLET END
SCALE: 1/2" = 1'-0"

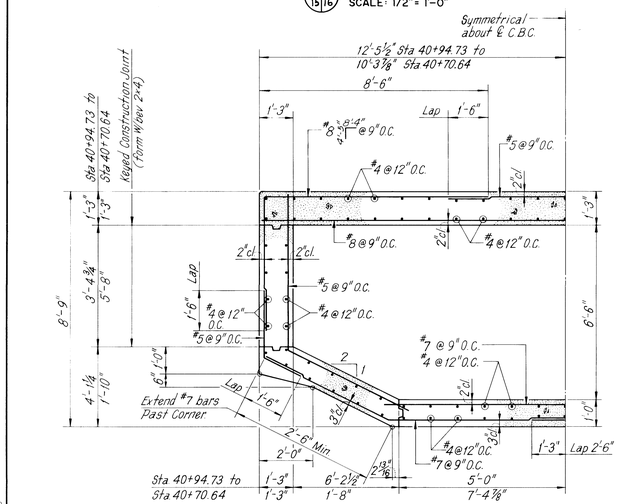

Note:
Use same reinforcing Sta 40+70.64 to Outlet Sta 40+62.24

1/15|16 HALF SECTION
SCALE: 1/2" = 1'-0"

5/16|16 WINGWALL CONNECTION DETAILS
SCALE: 1/2" = 1'-0"

RECORD DRAWING
Date: 2/11/87
These drawings have been revised based on field data and every reasonable attempt has been made to depict construction as actually performed

26 : 7231687

AMAFCA

WESTGATE DIVERSION CHANNELS
SNOW VISTA CHANNEL PHASE II
BENAVIDES ROAD C.B.C.
REINFORCEMENT DETAILS

DRAWN BY V.R.V
DATE SEPT 1986
SCALE AS SHOWN

GORDON HERKENHOFF & ASSOCIATES, INC.
ENGINEERS ARCHITECTS PLANNERS
ALBUQUERQUE FARMINGTON SANTA FE

SHEET 16 OF 49

BRUNING 14326

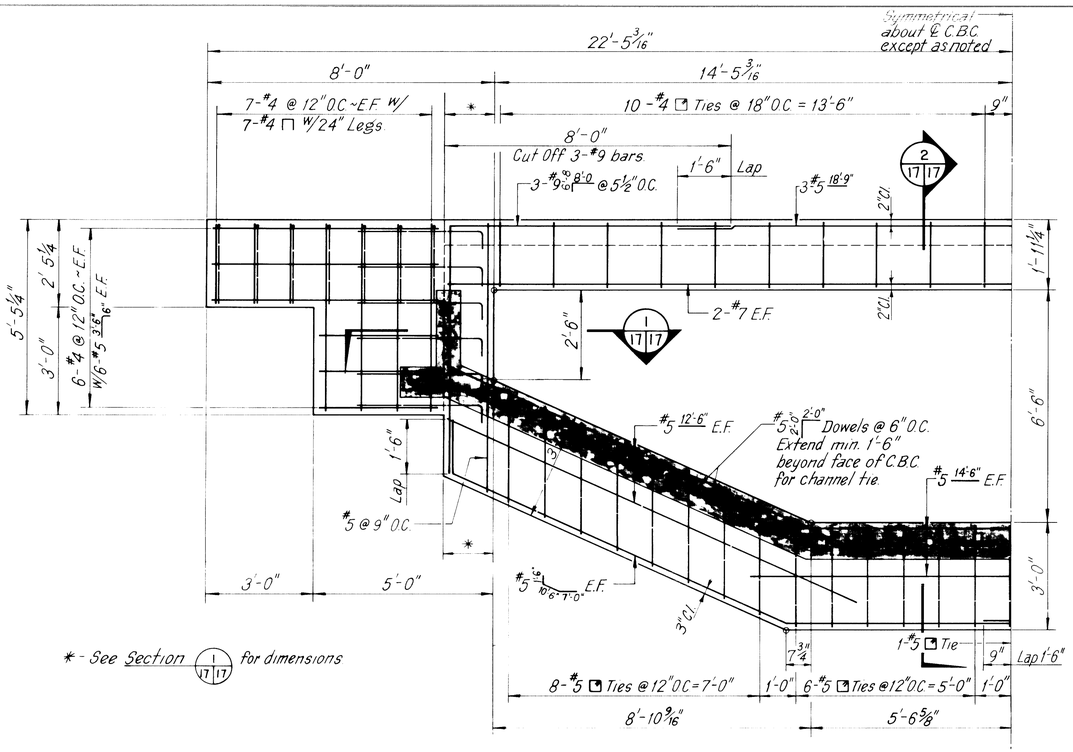

4/15|17 **ELEVATION AT INLET**
SCALE: 1/2" = 1'-0"

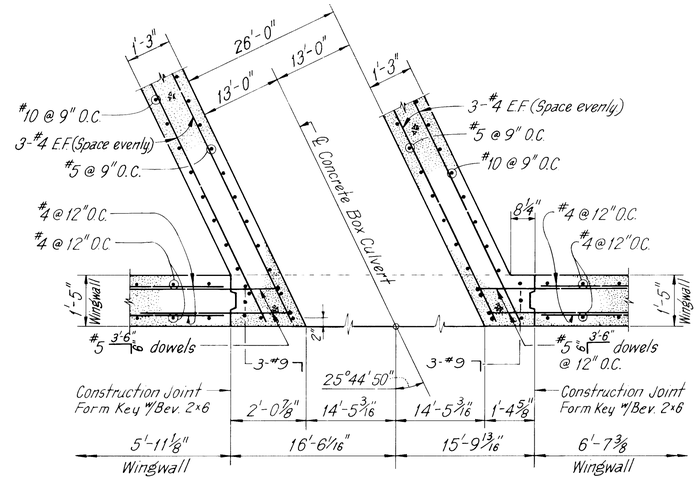

1/17|17 **WINGWALL CONNECTION DETAILS**
SCALE: 1/2" = 1'-0"

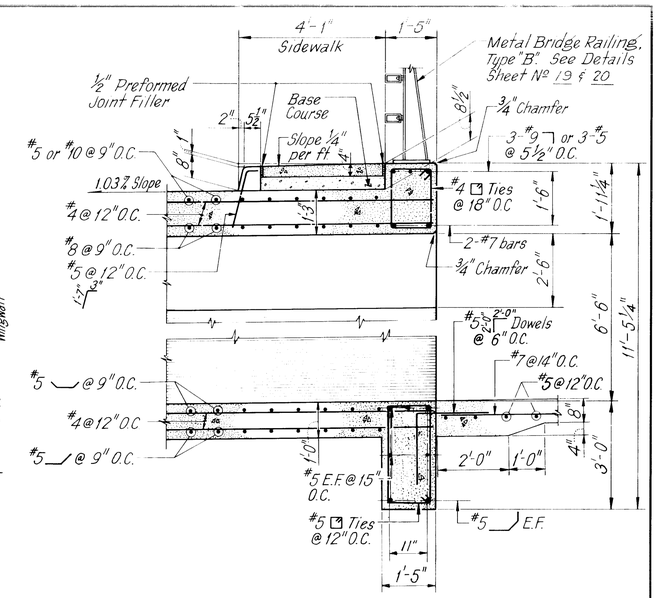

2/17|17 **SECTION AT INLET END**
SCALE: 1/2" = 1'-0"

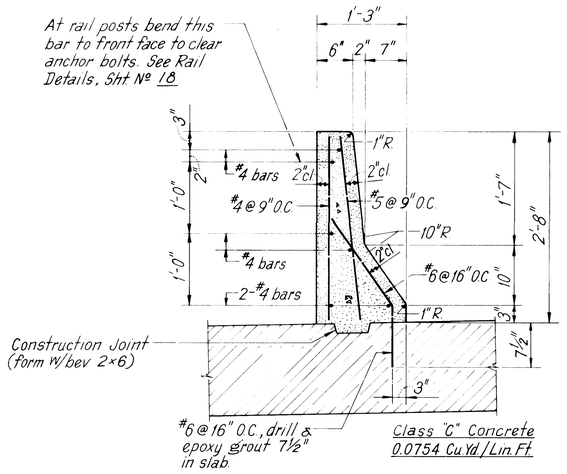

5/15|17 **BARRIER RAILING DETAIL**
SCALE: 1" = 1'-0"

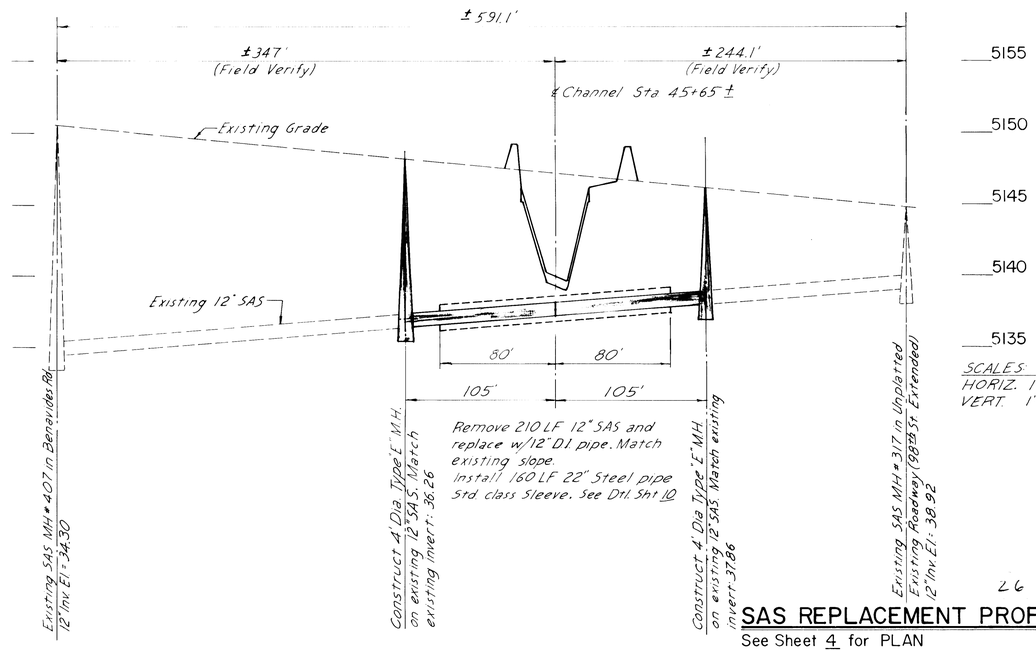

SCALES:
HORIZ. 1" = 50'
VERT. 1" = 5'

SAS REPLACEMENT PROFILE
See Sheet 4 for PLAN

RECORD DRAWING
Date JUL 1 0 1987
These drawings have been revised based on field data and every reasonable attempt has been made to depict construction as actually performed.

26 17231787

AMAFCA
WESTGATE DIVERSION CHANNELS
SNOW VISTA CHANNEL PHASE II
BENAVIDES ROAD C.B.C.
REINFORCEMENT DETAILS

DRAWN BY	V R V
DATE	SEPT. 1986
SCALE	AS SHOWN

GORDON HERKENHOFF & ASSOCIATES, INC.
ENGINEERS ARCHITECTS PLANNERS
ALBUQUERQUE FARMINGTON SANTA FE

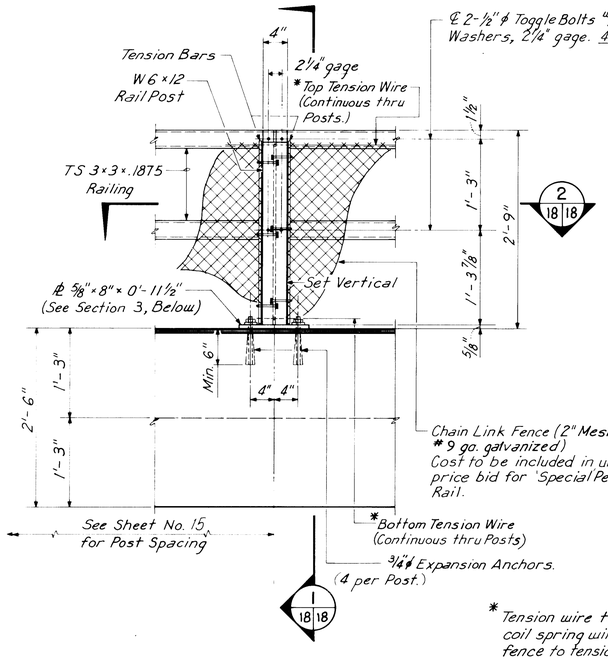

ELEVATION

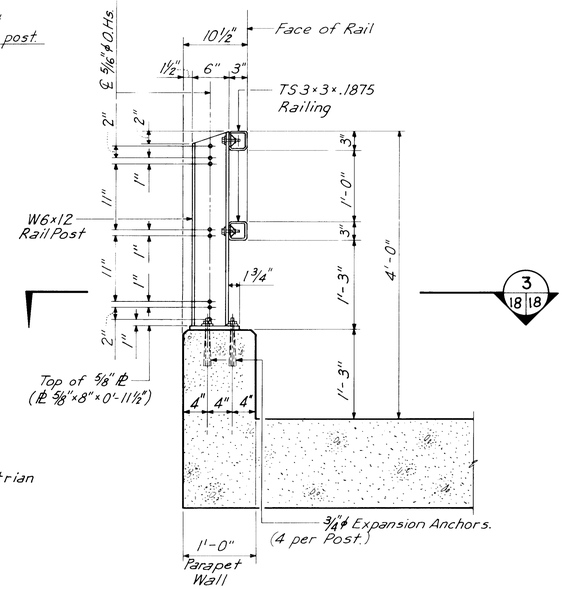

SECTION 1 (18 18)

* Tension wire to be #7 ga. galvanized coil spring wire. Attach chain link fence to tension wires with #11 ga. galvanized hog rings spaced 24" o.c.

'SPECIAL' PEDESTRIAN RAIL DETAILS

Scale : 1" = 1'-0"

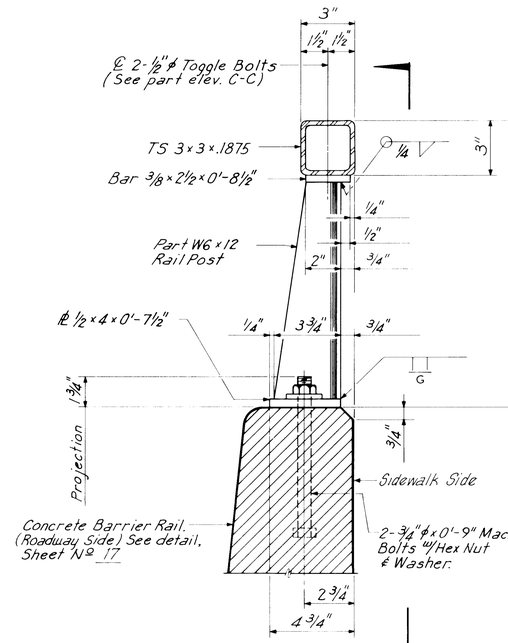

SECTION 5 (18 18) 4 (18 18)

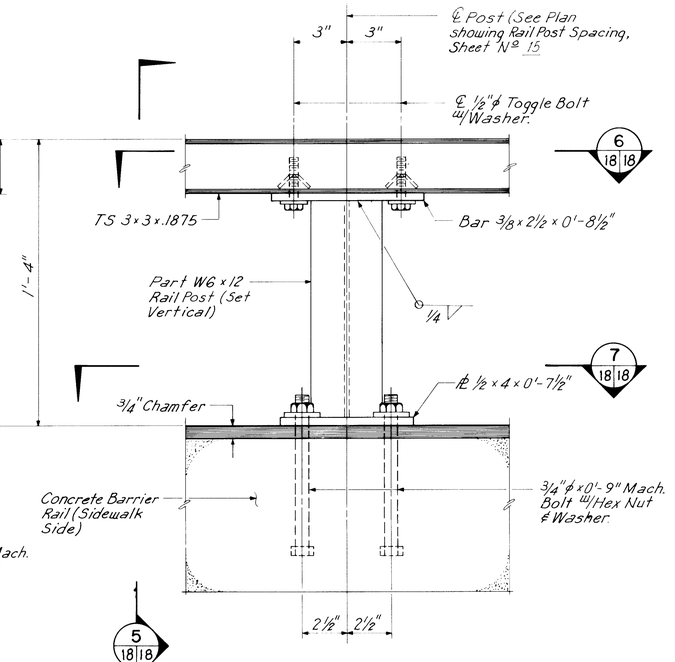

PART ELEVATION 4 (18 18)

BARRIER MOUNTED PEDESTRIAN RAILING (I-RAIL)

Scale: 3" = 1'-0"

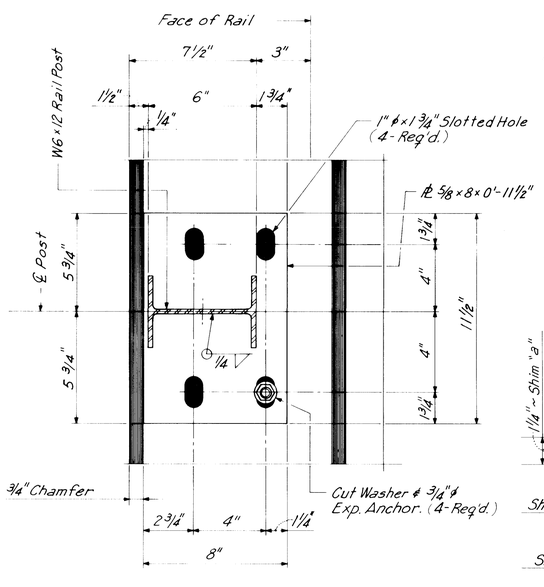

SECTION 3 (18 18)
Scale : 3" = 1'-0"

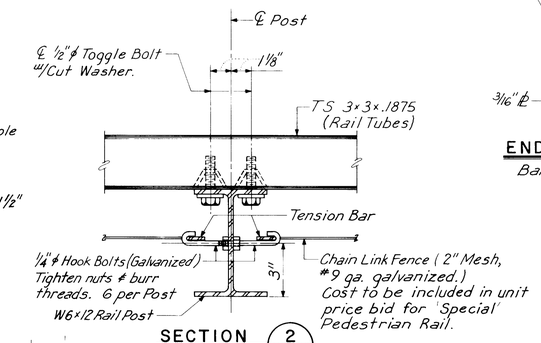

SECTION 2 (18 18)
Scale : 3" = 1'

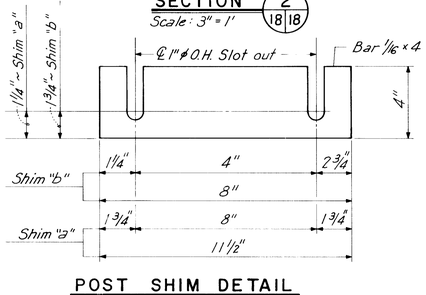

POST SHIM DETAIL

Not to Scale
1-Shim "a" & 1-Shim "b" Req'd. @ each Post.
Use between Post & Concrete where necessary.

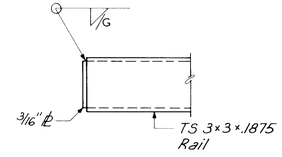

END OF RAIL DETAIL

Barrier Mounted Rail

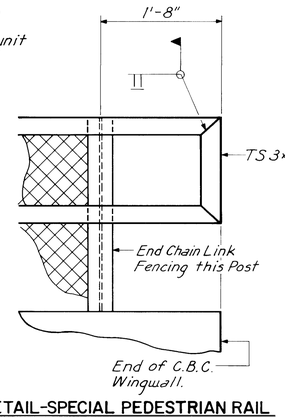

DETAIL-SPECIAL PEDESTRIAN RAIL AT ENDS

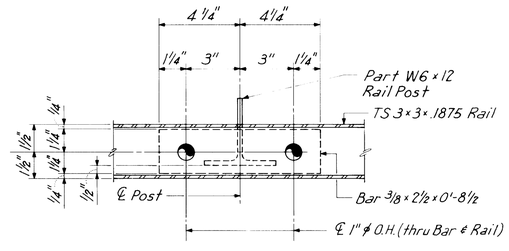

SECTION 6 (18 18)
Scale: 3" = 1'-0"

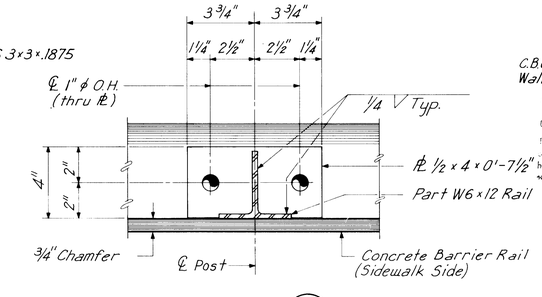

SECTION 7 (18 18)
Scale : 3" = 1'-0"

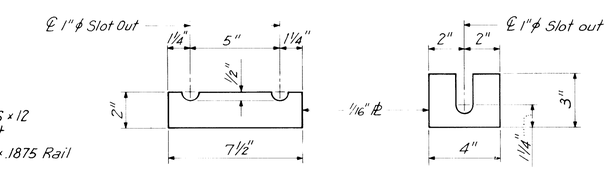

NOTE: One each required per post.

POST SHIM DETAILS

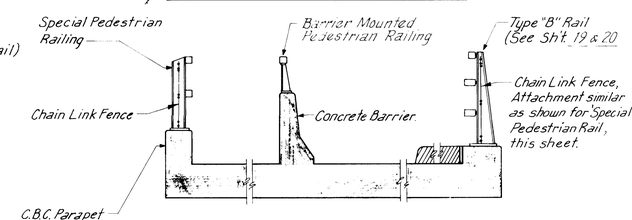

SECTION
Scale: 3/8" = 1'-0"

RECORD DRAWING
Date [illegible] 1987
These drawings have been revised based on field data and every reasonable attempt has been made to depict construction as actually performed.

AMAFCA
WESTGATE DIVERSION CHANNELS
SNOW VISTA CHANNEL PHASE II
BARRIER RAIL & SPECIAL PEDESTRIAN RAILING DETAILS

DRAWN BY	R.R.M.
DATE	Sept. 1986
SCALE	As shown

GORDON HERKENHOFF & ASSOCIATES, INC.
ENGINEERS ARCHITECTS PLANNERS
ALBUQUERQUE FARMINGTON SANTA FE

26 1 7 2 3 1 8 8 7

34326 BRUNING

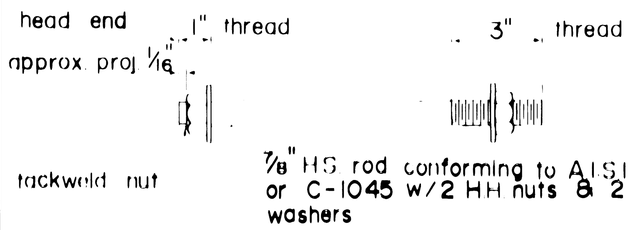

ALTERNATE POST ANCHOR BOLT DETAIL
(TYPE A & B RAIL)

7/8" H.S. bolts w/2 washers each, galvanized. 1"x 2" horizontal slotted hole in 5/16" PL

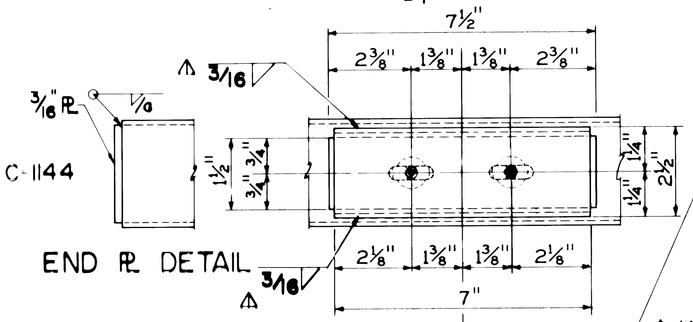

END PL DETAIL

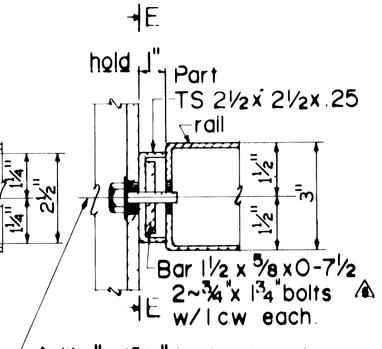

SECTION E-E

7/8" H.S. Bolt Galvanized 15/16" O.H. in 5/16" PL.

SECTION D-D

RAIL TO POST CONNECTION

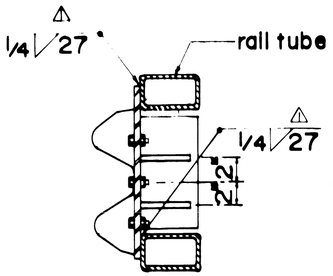

SECTION B-B

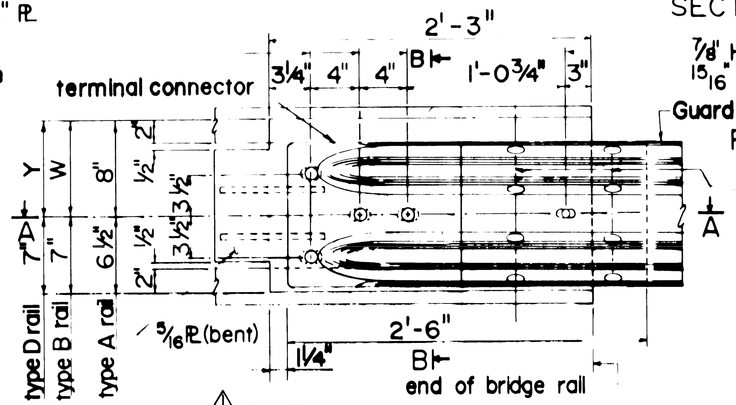

ELEVATION

$Y = H_1 - H_2 + 1'-3\frac{1}{2}$
$W = H_1 - H_2 + 1'-2$

See sheet 3 for dimensions H_1 & H_2

Note: Lap guard rail and terminal connector so that the projecting edge faces away from approaching traffic.

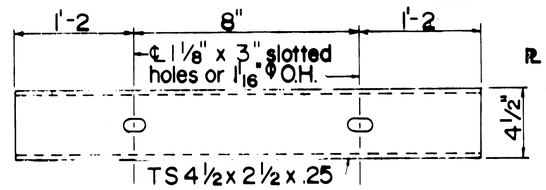

SPLICE MEMBER FOR TS 5 x 3 x .1875 RAIL

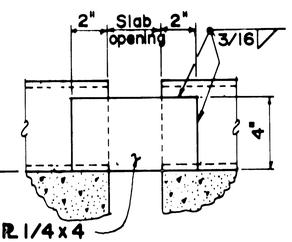

DETAIL OF GUTTER AT DECK JOINT

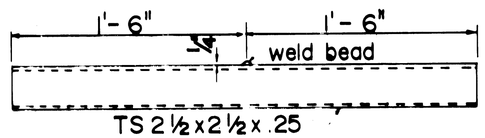

SPLICE MEMBER FOR TS 3 x 3 x .1875 RAIL

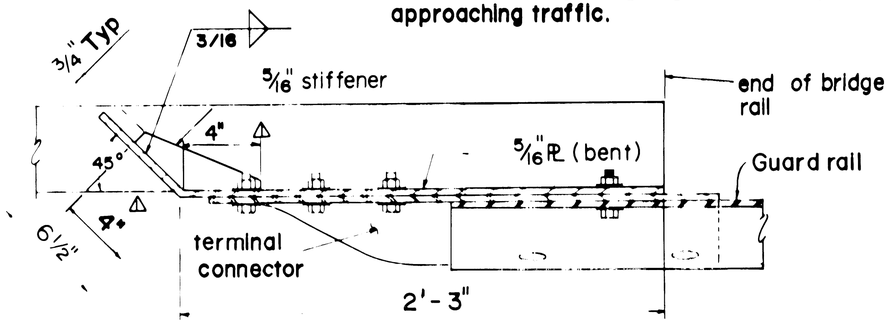

SECTION A - A

GUARD RAIL CONNECTION DETAILS

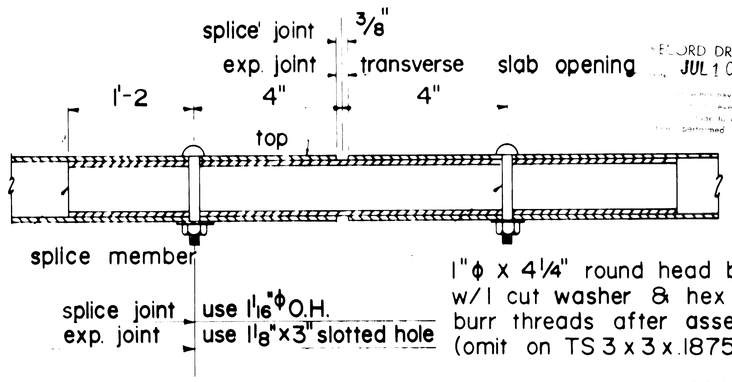

RAIL JOINT DETAIL

RECORD DRAWING JUL 10 1987

GENERAL NOTES

1. Design in accordance with 1977 AASHTO Specifications.
2. All rails to be parallel to grade unless otherwise shown.
3. See structure details for post spacing and other details not shown.
4. Details shown are for steel only. A steel or aluminum bridge railing of an alternate design may be substituted for the railing shown on these sheets provided the alternate design is approved by the Engineer before fabrication.
5. Steel rail tubes shall conform to the requirements of ASTM designation A500 or A501. Post spacing shown on the plans is based on the use of TS5x3x.1875 conforming to the requirements of ASTM designation A500 grade B. If the contractor elects to use tubes of another grade, the post spacing shown on the plans will be revised by the Bridge Design Section.
6. Metal bridge railing will be paid for at the unit price per foot.
7. Terminal connector shall be AASHTO-ARBA STD HM-TF 13/RE-8, shall conform to AASHTO Specification M-180 be galvanized and of class B sheet thickness
8. *Back weld all threaded nuts or maul bolt threads after tightening to prevent theft*

IDENT. NO.	DESCRIPTION	DATE	BY
4	STRENGTHENED RAIL-POST CONNECTION	2-6-80	E.R.D.
3	CHANGED SERIAL DESIGNATION	10-26-79	E.R.D.
2	CHANGED SPLICE JOINT DETAIL	1-26-79	J.D.G.
1	CHANGED SHEET NUMBER	6-16-78	J.A.H.
0	ADDED DIMENSIONS	6-16-78	J.A.H.
1	GEN. NOTES, RAIL CONNECT., MINOR REV.	5-25-77	[illegible]

REVISIONS (OR CHANGE NOTICES)

NEW MEXICO
STATE HIGHWAY DEPARTMENT

METAL BRIDGE RAILING

GENERAL NOTES & TYPICAL DETAILS

DESIGNED BY CFV
DRAWN BY G.V.
CHECKED BY H.G.

APPROVAL RECOMMENDED H. Tacluce BRIDGE ENGINEER 2-26-76 DATE
APPROVED Roy Cope Smith ENGINEER OF DESIGN 3-7-76 DATE

SERIAL BMR-001-06

26 1723 1987

F.H.W.A. Region No.	STATE	SHEET NO.	TOTAL SHEETS
6	NEW MEXICO		

Note: Use bevel washers with 5% slope when top and bottom of concrete diverge by more than 3%. If the divergence exceeds 7%, special details will be shown on bridge plans.

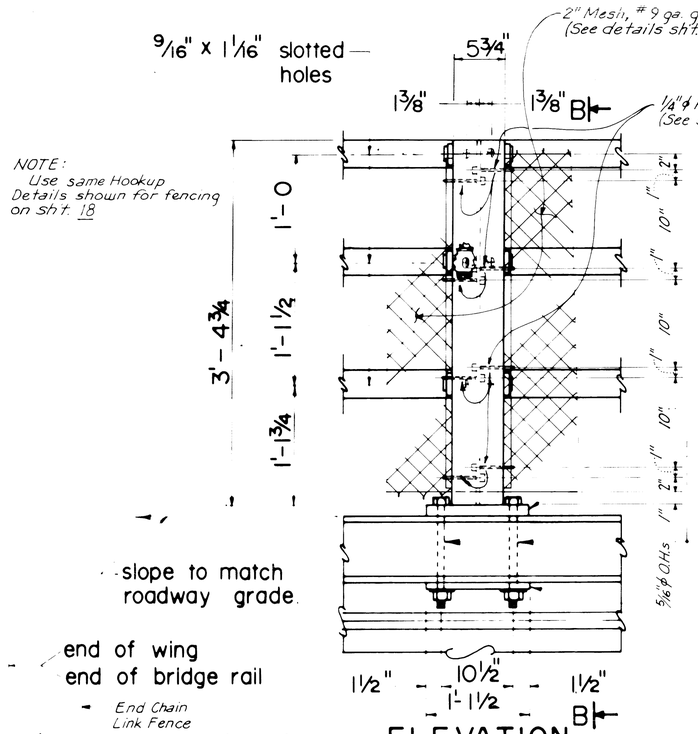

ELEVATION

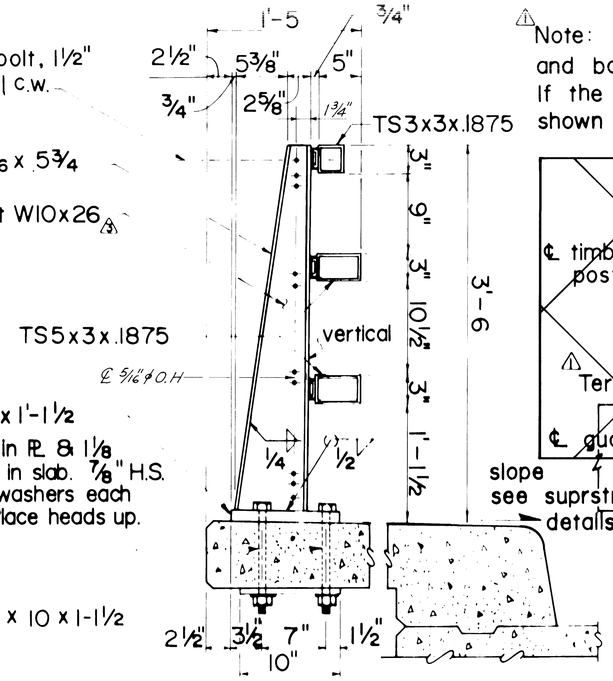

SECTION B-B

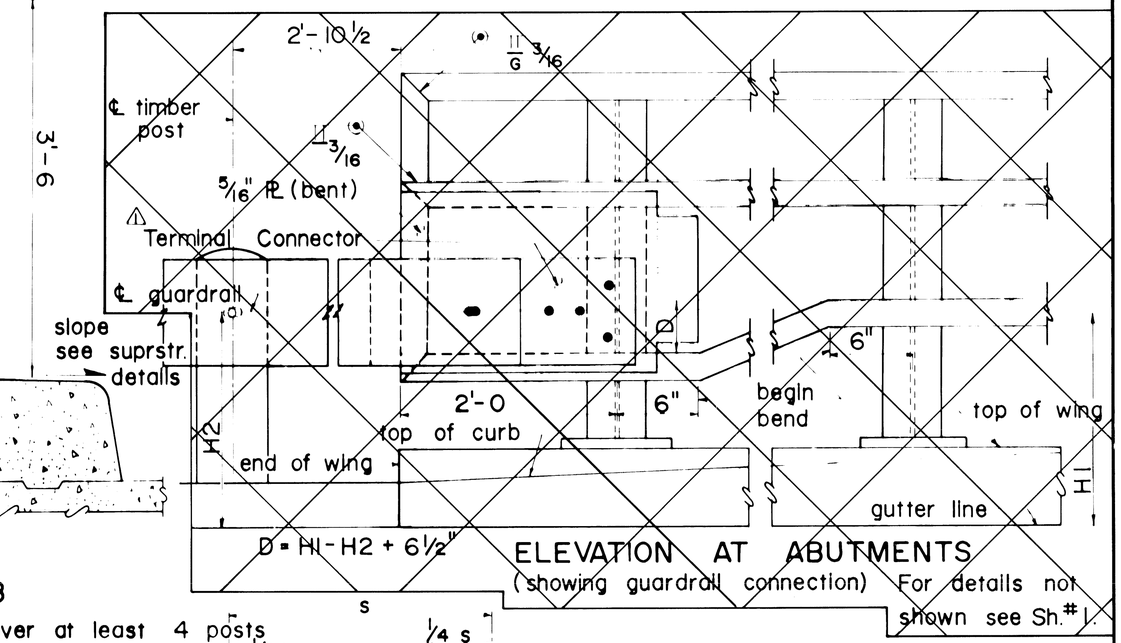

ELEVATION AT ABUTMENTS
(showing guardrail connection) For details not shown see Sh.# 1.

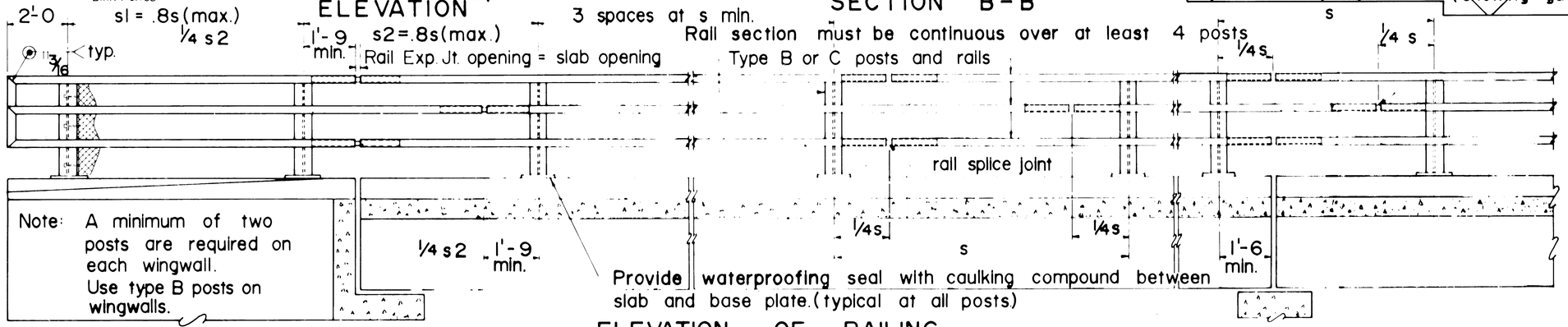

Note: A minimum of two posts are required on each wingwall. Use type B posts on wingwalls.

ELEVATION OF RAILING

Rail expansion joint. Place near all piers in simple span bridges. Place at ends of continuous span units.

Serial BMR-001 must accompany this sheet.

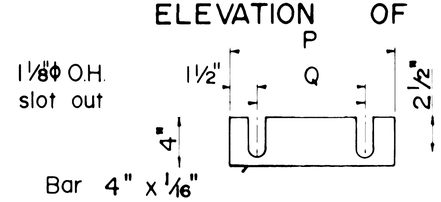

POST SHIMS ~ TYPE B RAIL

P = 1'-1 1/2 & 1'-0 ~ Q = 10 1/2 & 7. One shim P = 1'-1 1/2 & one shim P = 1'-0 for each Type B rail post. Post shims are to be used between post and concrete where necessary.

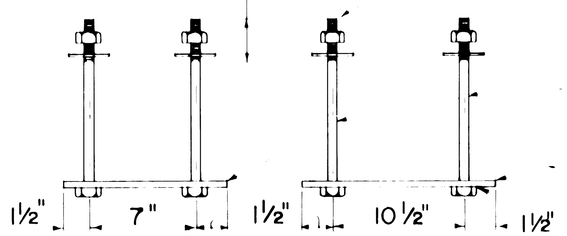

ANCHOR FOR RAIL POST ON WINGWALL

place this end up

7/8ϕ x 1'-2 H.S. bolt w/1 c.w. under nut.

PL 5/8 x 10 x 1-1 1/2" tack weld to PL

RECORD DRAWING
Date JUL 1 0 1987
These drawings have been revised based on field data [illegible] construction as actually performed.

26 172320 87

* Basis for spacing shown on plans. See note 6.

Max. S	Type of Steel	ASTM Desig.
7'-8	TS5 x 3 x .1875	TS3 x 3 x .155
8'-4	A501	A500 or A501
9'-10*	A500 Grade A	A500 or A501
	A500 Grade B	A500 or A501

IDENT NO	DESCRIPTION	DATE	BY
6	ADDED CROSS REFERENCE	2-4-80	ERD
5	CHANGED SERIAL DESIGNATION	10-26-79	ERD
4	UPDATE POST SIZES	7-12-78	JAH
3	CHANGED SHEET NUMBER	6-16-78	JAH
2	Max. "S" & Minor Revisions	5-25-77	[illegible]
1			

REVISIONS (OR CHANGE NOTICES)

NEW MEXICO
STATE HIGHWAY DEPARTMENT

METAL BRIDGE RAILING
TYPE B

DESIGNED BY [illegible]
DRAWN BY G.V.
CHECKED BY E.G.

APPROVAL
RECOMMENDED BRIDGE ENGINEER DATE
APPROVED Roy Logan 3-9-76
ENGINEER OF DESIGN DATE

SERIAL BMR-003-05

BRUNING

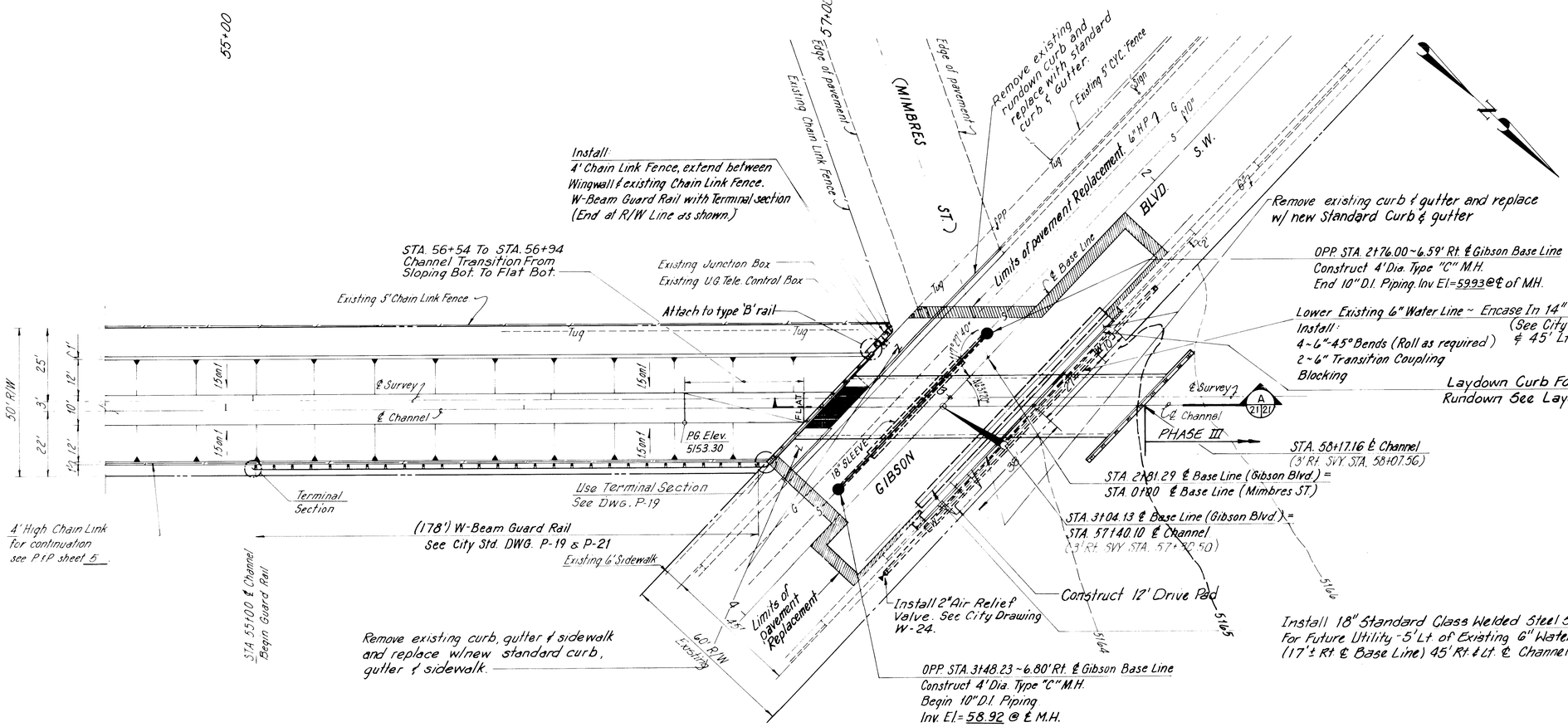

BOX CULVERT LAYOUT @ GIBSON CROSSING

Scale 1" = 20'

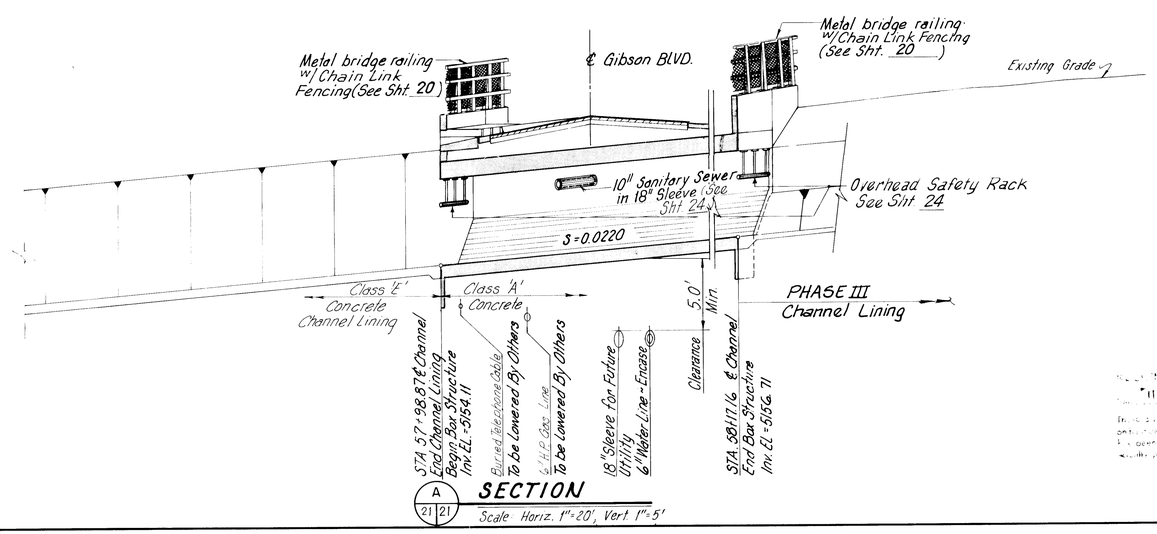

A 21 21

SECTION

Scale Horiz. 1" = 20', Vert. 1" = 5'

General Notes

1. All exposed edges shall have 3/4" chamfer unless otherwise shown.
2. Concrete for box culvert shall be class 'A'.
3. Finish shall conform to specifications.
4. Contractor to field verify locations and depths of all utility lines prior to construction.
5. Field verify size of sanitary sewer. Adjust sleeve size if required.
6. Place stationary bollards 4' behind curb at all existing curb openings on north side of Gibson 500' either side of channel.

REVISED 11/6/86
REVISED 10/13/86 26 17232187

AMAFCA

WESTGATE DIVERSION CHANNELS

SNOW VISTA CHANNEL PHASE II
GIBSON BLVD.
CONCRETE BOX CULVERT
LAYOUT & GRADING PLAN

DRAWN BY	J.C.D.
DATE	SEPT. 1986
SCALE	AS SHOWN

GORDON HERKENHOFF & ASSOCIATES, INC.
ENGINEERS ARCHITECTS PLANNERS
ALBUQUERQUE SANTA FE

CLINTON DODGE NEW MEXICO 6418 REGISTERED PROFESSIONAL ENGINEER

BRUNING 34326

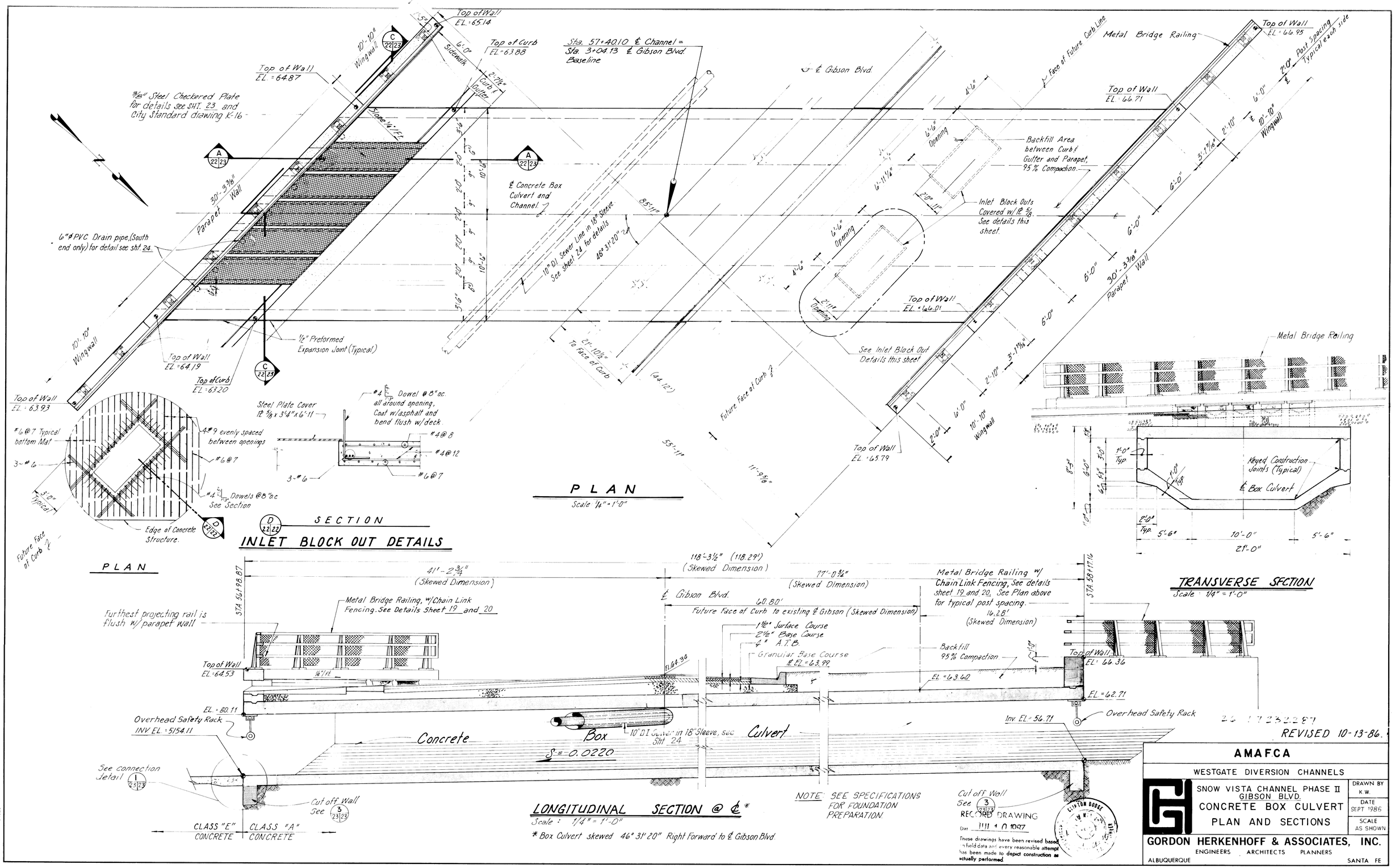

SHEET 22 OF 49

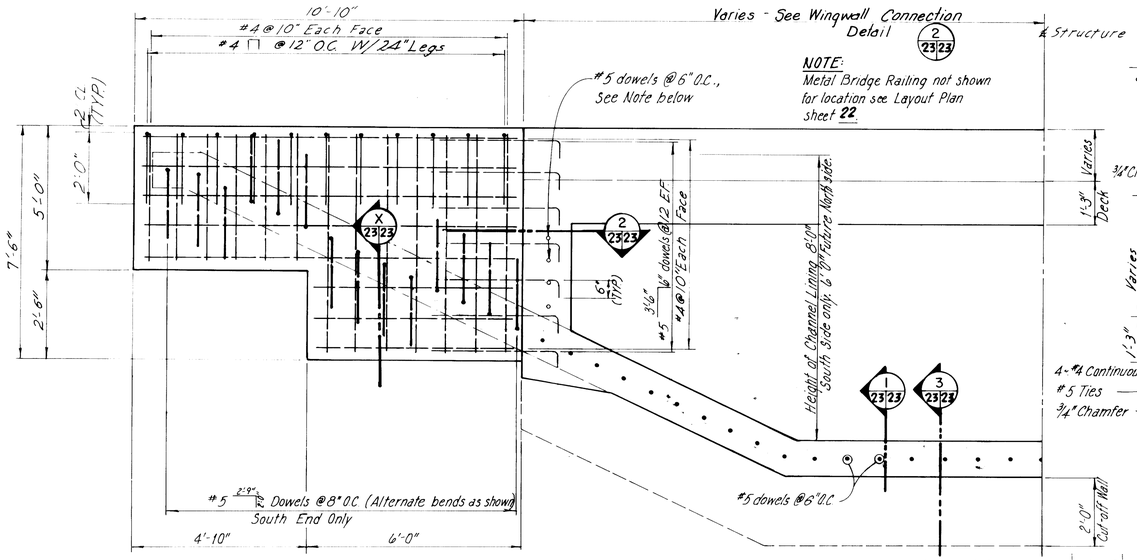

TYPICAL WINGWALL ELEVATION

Not to Scale

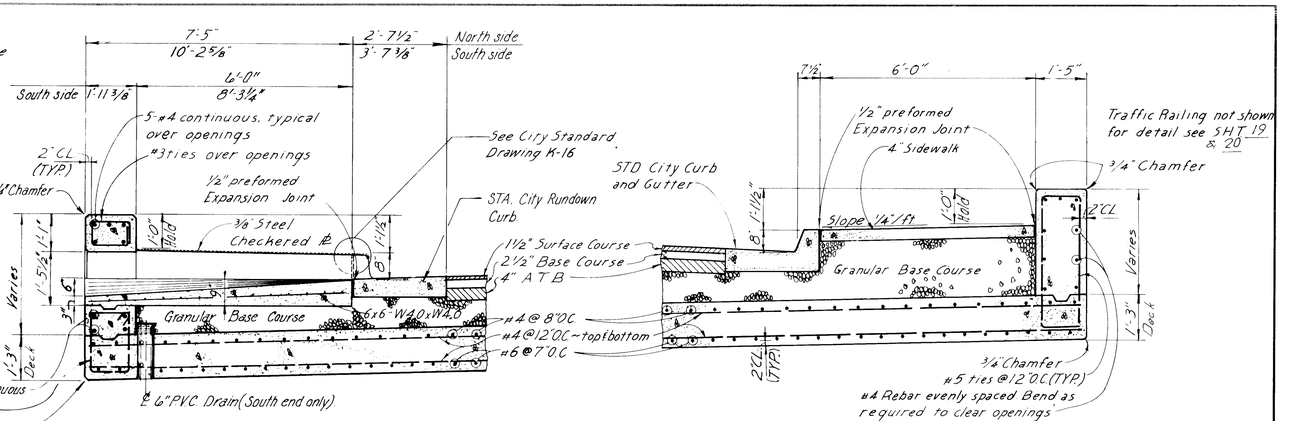

A 22/23 SIDEWALK CULVERT SECTION

Scale 1/2" = 1'-0"

B 22/23 SIDEWALK PARAPET SECTION

Scale 1/2" = 1'-0"

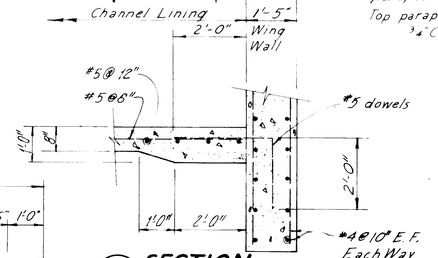

X 23/23 SECTION

Scale: 1/2" = 1'-0"

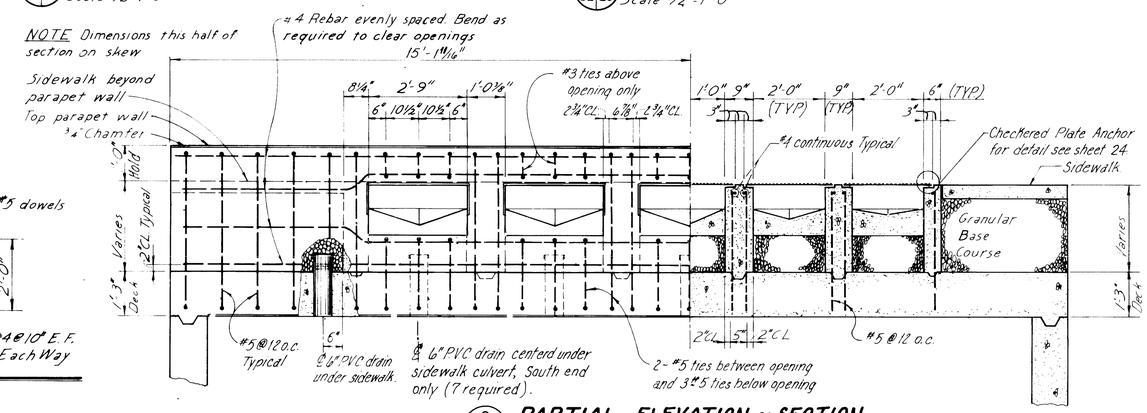

C 22/23 PARTIAL ELEVATION ~ SECTION

Scale 1/2" = 1'-0"

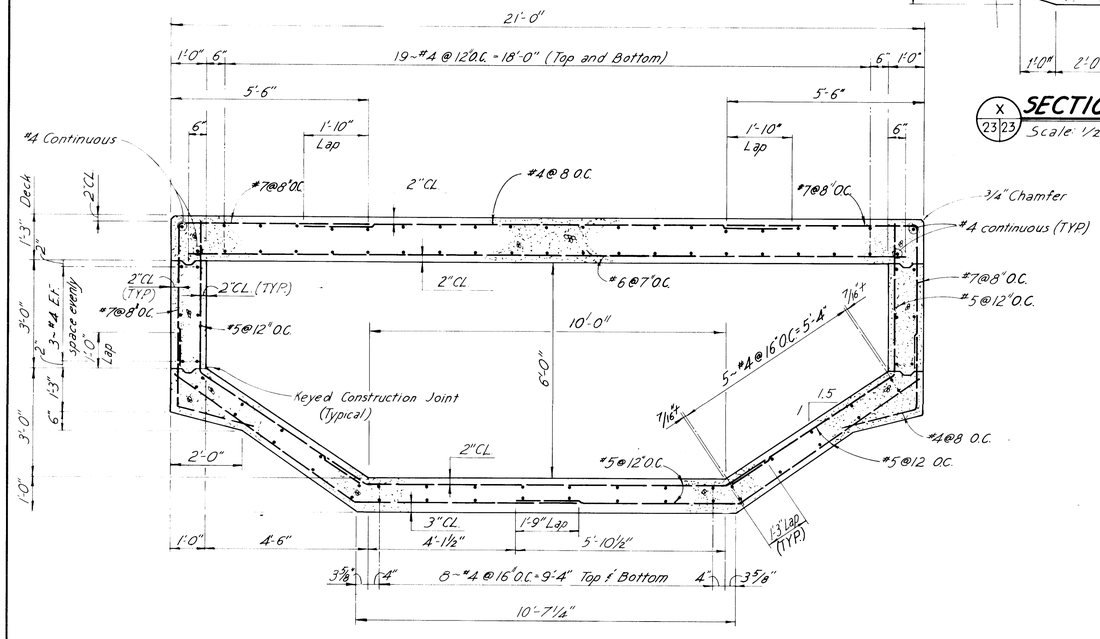

TRANSVERSE SECTION (TYP.)

Scale: 1/2" = 1'-0"

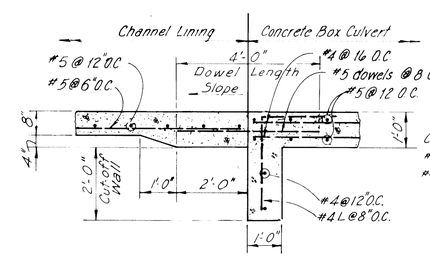

1 23/23 CONNECTION DETAIL - SECTION

Scale 1/2" = 1'-0" SOUTH END ONLY.

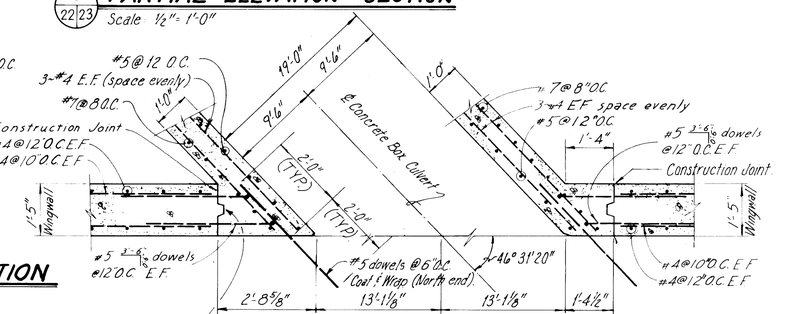

2 23/23 WINGWALL CONNECTION DETAIL

Scale 1/2" = 1'-0"

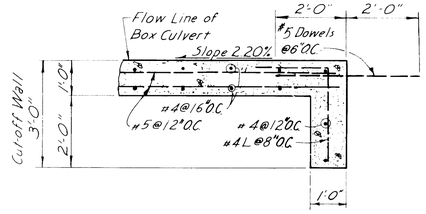

3 23/23 CUT-OFF WALL DETAIL - SECTION

Scale 1/2" = 1'-0" NORTH END ONLY.

REVISED 12-18-86

RECORD DRAWING
Date JUL 1 0 1987
These drawings have been revised based on field data and every reasonable attempt has been made to depict construction as actually performed

AMAFCA

WESTGATE DIVERSION CHANNELS

SNOW VISTA CHANNEL PHASE II
GIBSON BLVD.
CONCRETE BOX CULVERT
REINFORCEMENT DETAILS

DRAWN BY K.H.K.
DATE SEPT 1986
SCALE AS SHOWN

GORDON HERKENHOFF & ASSOCIATES, INC.
ENGINEERS ARCHITECTS PLANNERS
ALBUQUERQUE SANTA FE

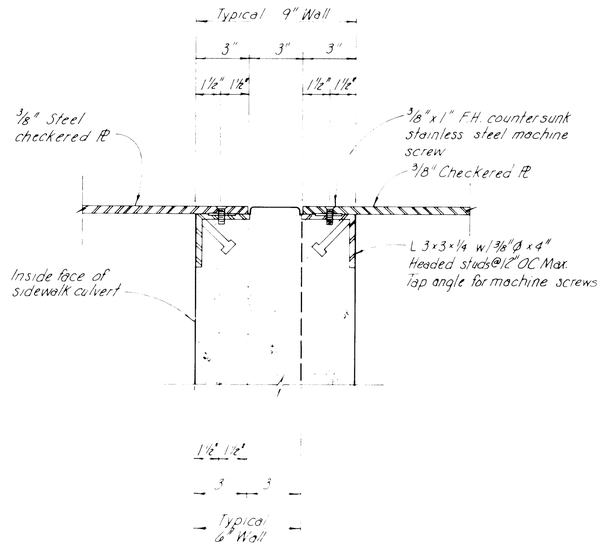

CHECKERED PLATE ANCHOR DETAIL

Scale 3" = 1'-0"

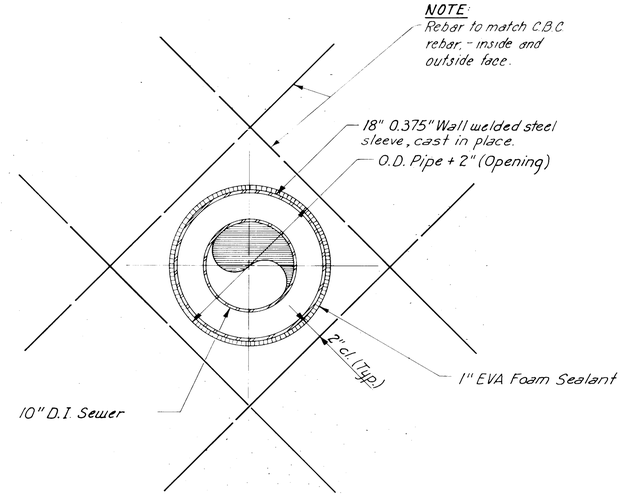

PIPE OPENING REINFORCEMENT DETAIL

Not to scale.

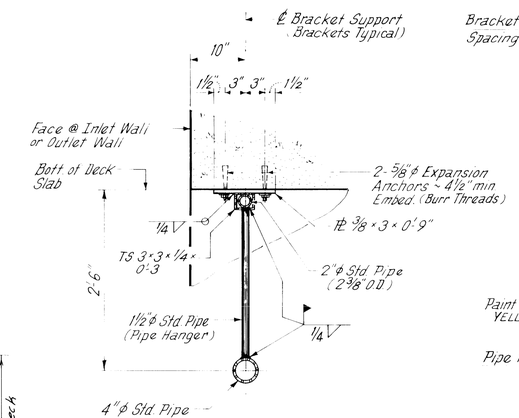

SECTION 1/24

Scale 1" = 1'-0"

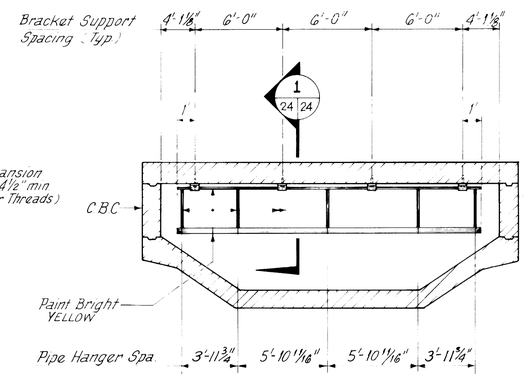

ELEVATION @ INLET OR OUTLET

N.T.S.

NOTE: Dimensions Shown on Skew

OVERHEAD SAFETY RACK DETAILS

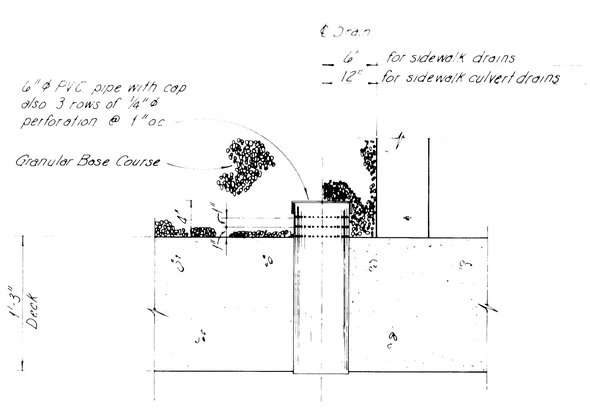

DRAIN PIPE DETAIL

Not to scale

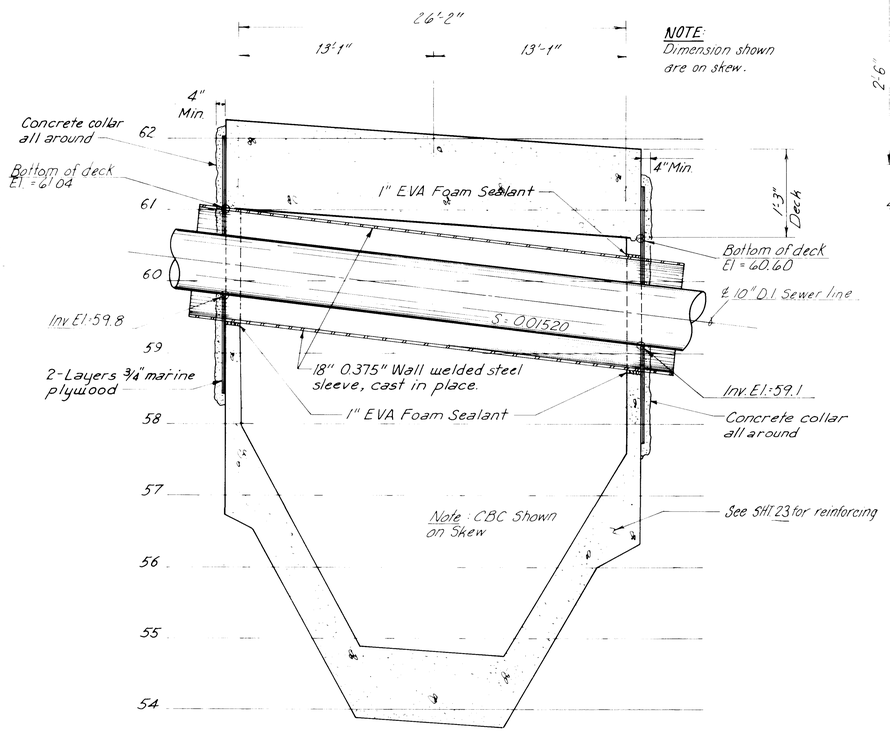

TRANSVERSE SECTION AT SEWER LINE CROSSING

Scale: HORIZ. 1" = 5'-0" VERT. 1" = 1'-0" (GIBSON BLVD.)

NOTE: Paint Exposed Steel Sleeve Bright Yellow.

26 17232487

RECORD DRAWING

Date JUN 10 1987

These drawings have been revised based on field data and every reasonable attempt has been made to depict construction as actually performed

AMAFCA	
WESTGATE DIVERSION CHANNELS	
SNOW VISTA CHANNEL PHASE II GIBSON BLVD C.B.C. SEWER LINE CROSSING and MISCELLANEOUS DETAILS	DRAWN BY A.N. & J.C.D. DATE Sept. 1986 SCALE AS SHOWN
GORDON HERKENHOFF & ASSOCIATES, INC. ENGINEERS ARCHITECTS PLANNERS ALBUQUERQUE SANTA FE	

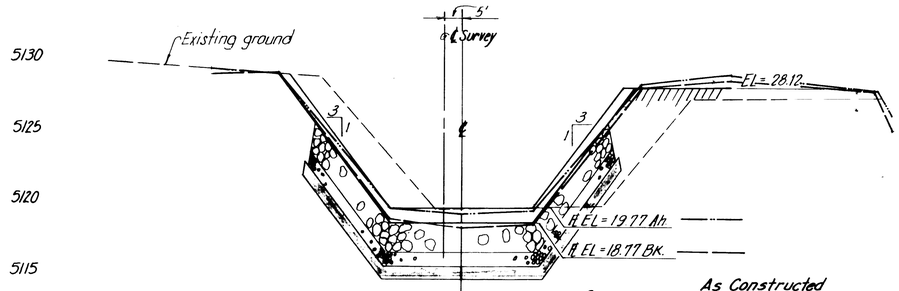

℄ Channel STA. 18+00
Drop Structure

		As Constructed
18+00	Cut = 4.67	1.62
	Fill = 1.47	1.64
18+04	Cut = 3.98	0.96
	Fill = 1.70	1.83

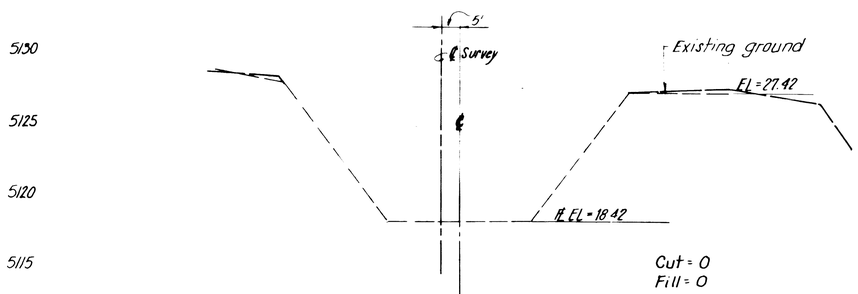

Cut = 0
Fill = 0

℄ Channel STA. 17+08.38

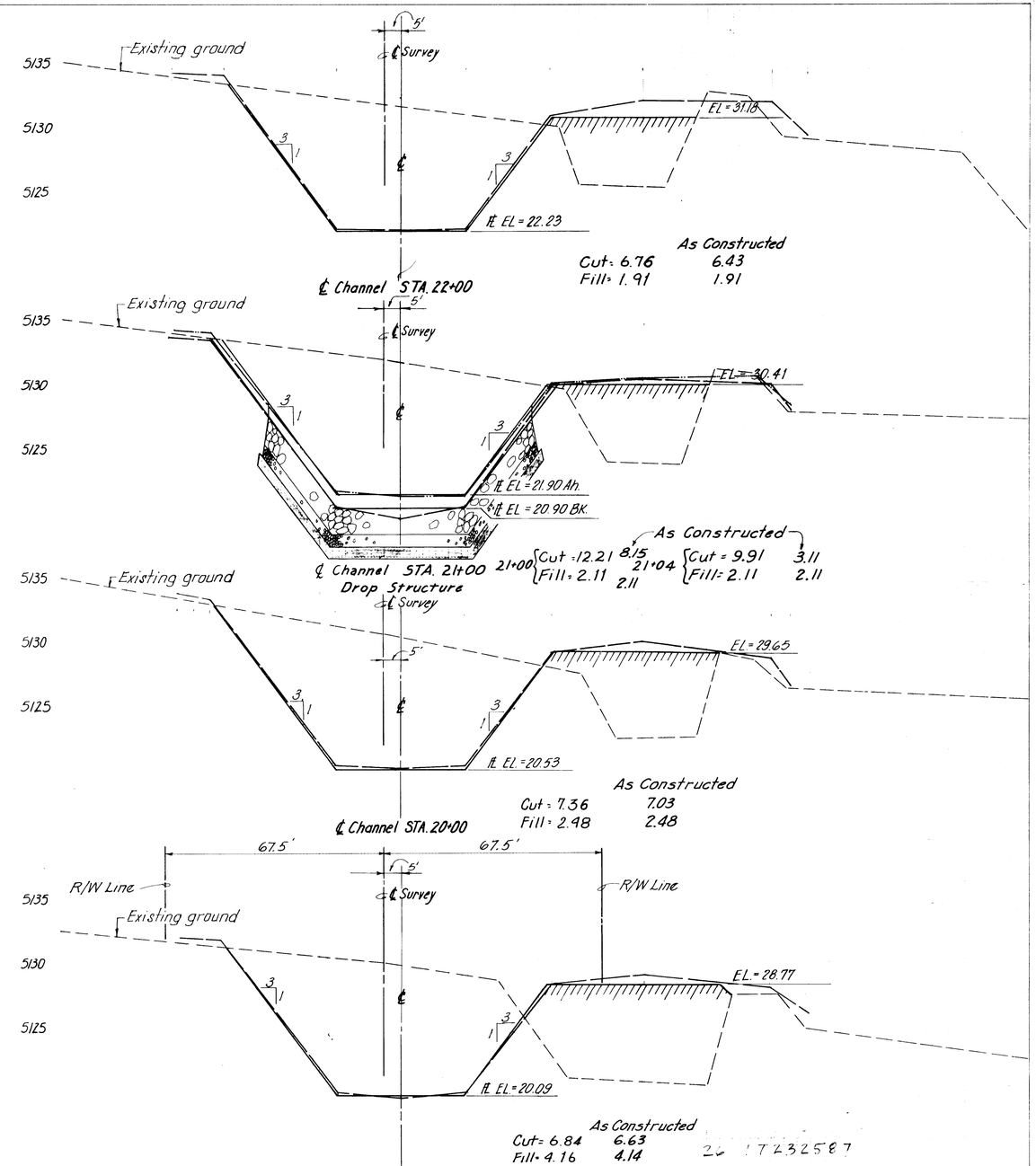

		As Constructed
	Cut = 6.76	6.43
	Fill = 1.91	1.91
21+00	Cut = 12.21	8.15
	Fill = 2.11	2.11
21+04	Cut = 9.91	3.11
	Fill = 2.11	2.11
	Cut = 7.36	7.03
	Fill = 2.48	2.48
	Cut = 6.84	6.63
	Fill = 4.16	4.14

26 17232587

LEGEND

- Exist. ground
- Design
- Field-Post construction at down stream for riprap structures.
- Field-Post construction upstream of riprap structure.

SCALES:
Horiz: 1" = 20'
Vert: 1" = 5'

RECORD DRAWING
Date JUL 1 0 1987
These drawings have been revised based on field data and every reasonable attempt has been made to depict construction as actually performed

AMAFCA
WESTGATE DIVERSION CHANNELS
SNOW VISTA CHANNEL PHASE II
CROSS SECTIONS
STA. 17+08.38 TO STA. 22+00

DRAWN BY	E.L.
DATE	SEPT. 1986
SCALE	AS SHOWN

GORDON HERKENHOFF & ASSOCIATES, INC.
ENGINEERS • PLANNERS
ALBUQUERQUE NEW MEXICO

PLATE 3 CROSS SECTION - DOTTED
CHARLES BRUNING COMPANY
MADE IN U.S.A.

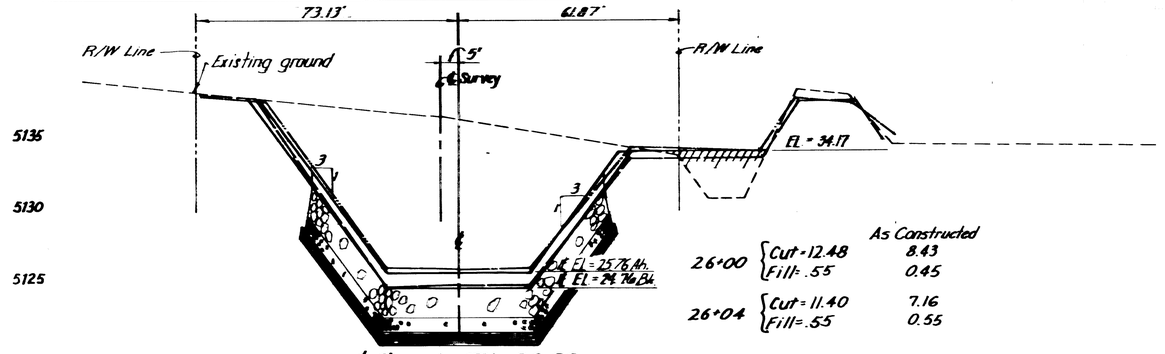

		As Constructed
26+00	Cut = 12.48	8.43
	Fill = .55	0.45
26+04	Cut = 11.40	7.16
	Fill = .55	0.55

℄ Channel STA. 26+00

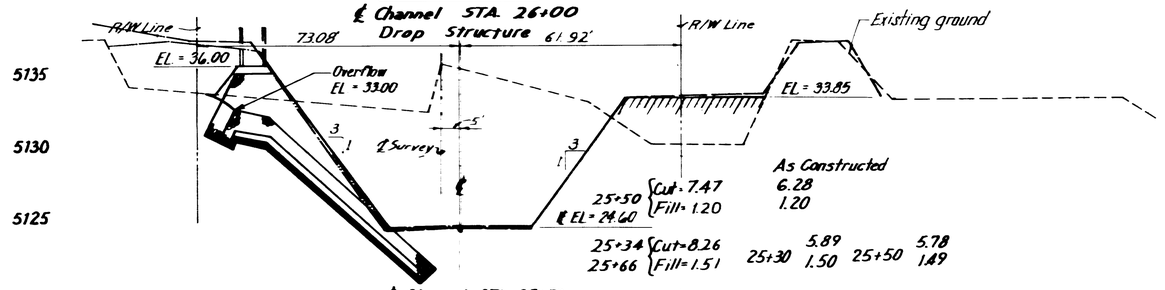

		As Constructed
25+50	Cut = 7.47	6.28
	Fill = 1.20	1.20
25+34	Cut = 8.26	5.89
25+66	Fill = 1.51	1.50
25+30		5.78
25+50		1.49

℄ Channel STA. 25+50

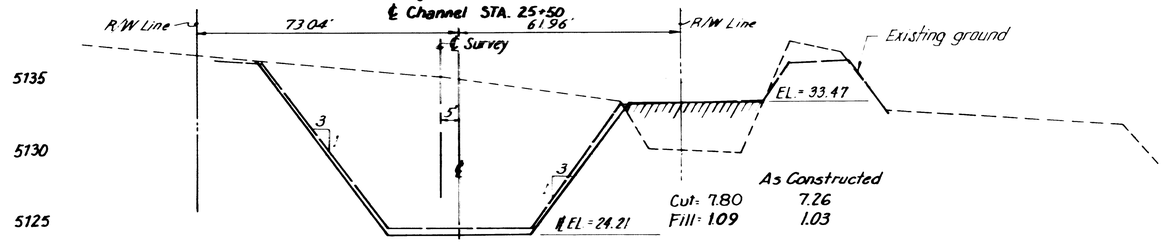

	As Constructed
Cut = 7.80	7.26
Fill = 1.09	1.03

℄ Channel STA. 25+00

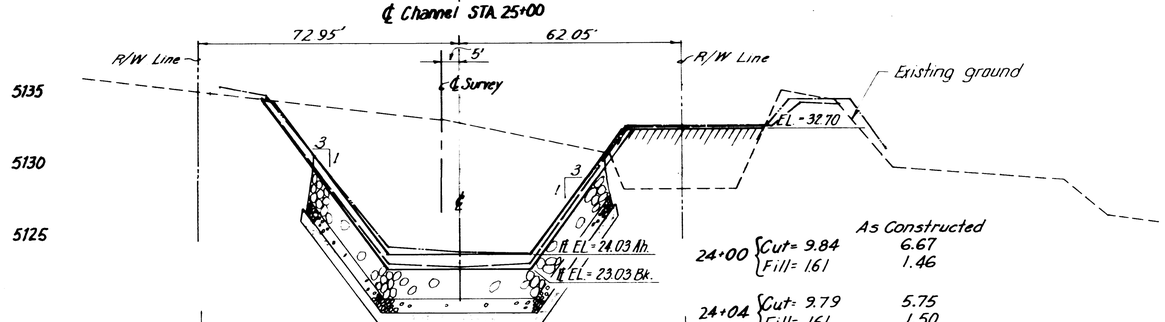

		As Constructed
24+00	Cut = 9.84	6.67
	Fill = 1.61	1.46
24+04	Cut = 9.79	5.75
	Fill = 1.61	1.50

℄ Channel STA. 24+00

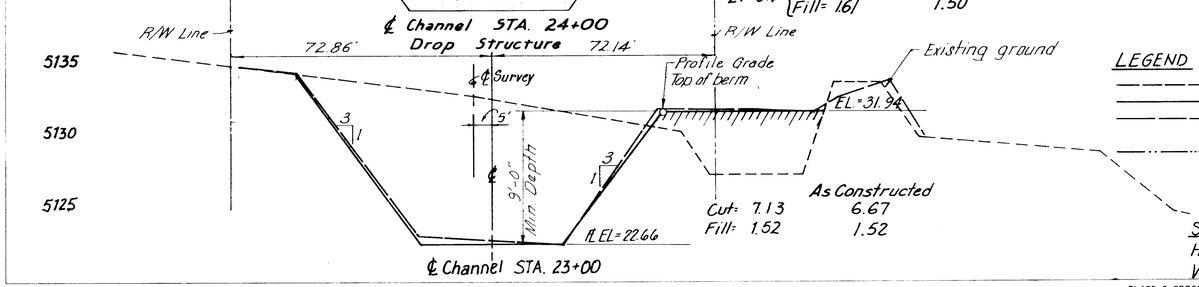

	As Constructed
Cut = 7.13	6.67
Fill = 1.52	1.52

℄ Channel STA. 23+00

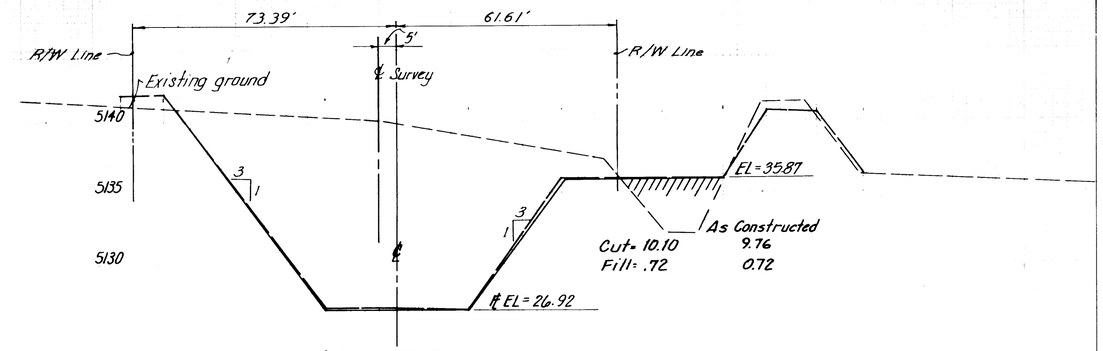

	As Constructed
Cut = 10.10	9.76
Fill = .72	0.72

℄ Channel STA. 29+00

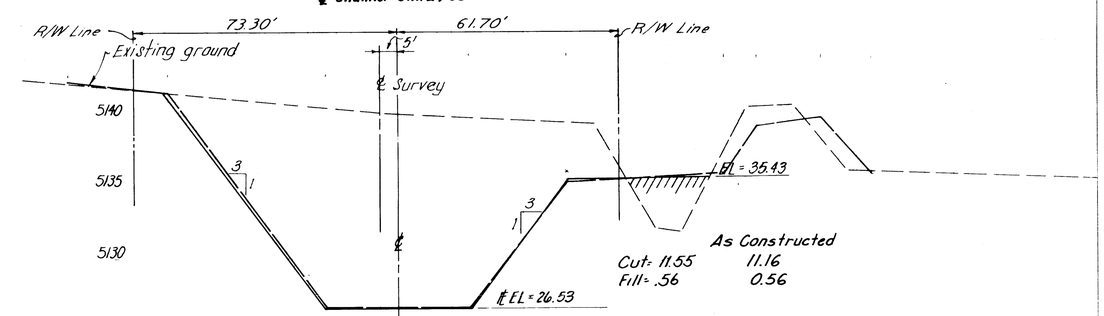

	As Constructed
Cut = 11.55	11.16
Fill = .56	0.56

℄ Channel STA. 28+00

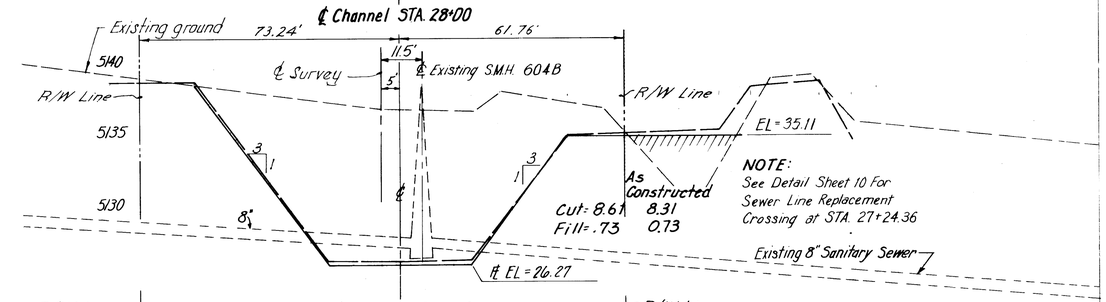

	As Constructed
Cut = 8.61	8.31
Fill = .73	0.73

NOTE:
See Detail Sheet 10 For Sewer Line Replacement Crossing at STA. 27+24.36

℄ Channel STA. 27+00

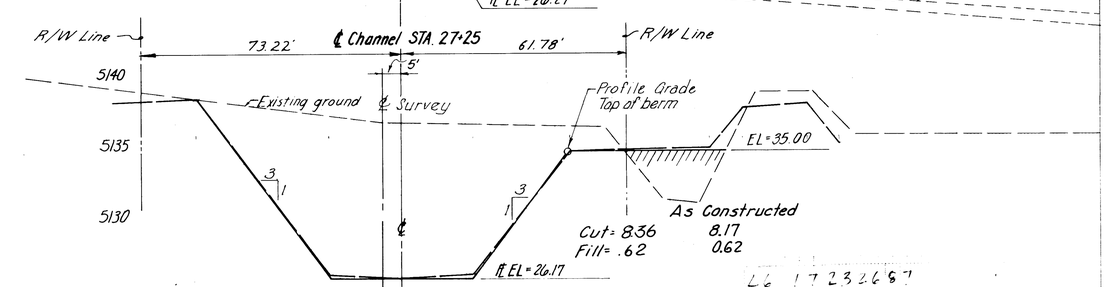

	As Constructed
Cut = 8.36	8.17
Fill = .62	0.62

℄ Channel STA. 27+25

LEGEND

- Exist. ground
- Design
- Field-Post construction at down stream for riprap structures.
- Field-Post construction upstream of riprap structure.

SCALES:
Horiz: 1" = 20'
Vert: 1" = 5'

RECORD DRAWING
Date 11/1/0 1007
These drawings have been revised based on field data and every reasonable attempt has been made to depict construction as actually performed

AMAFCA
WESTGATE DIVERSION CHANNELS
SNOW VISTA CHANNEL PHASE II
CROSS SECTIONS
STA. 23+00 TO STA. 29+00
DRAWN BY E.L.
DATE SEPT. 1986
SCALE AS SHOWN
GORDON HERKENHOFF & ASSOCIATES, INC.
ENGINEERS • PLANNERS
ALBUQUERQUE NEW MEXICO

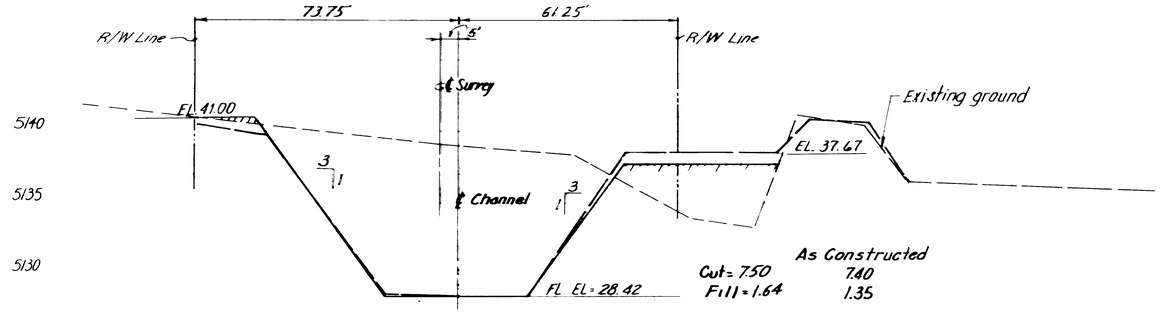

℄ Channel STA 33+00
Drop Structure

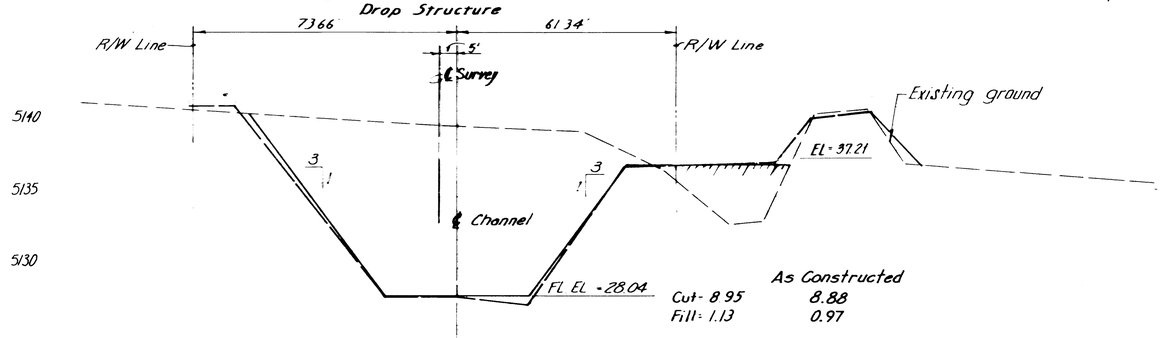

℄ Channel STA 32+00

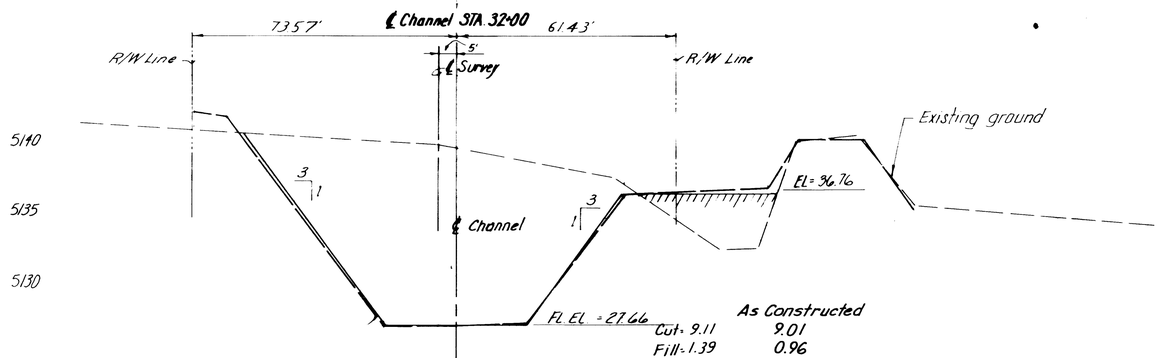

℄ Channel STA 31+00

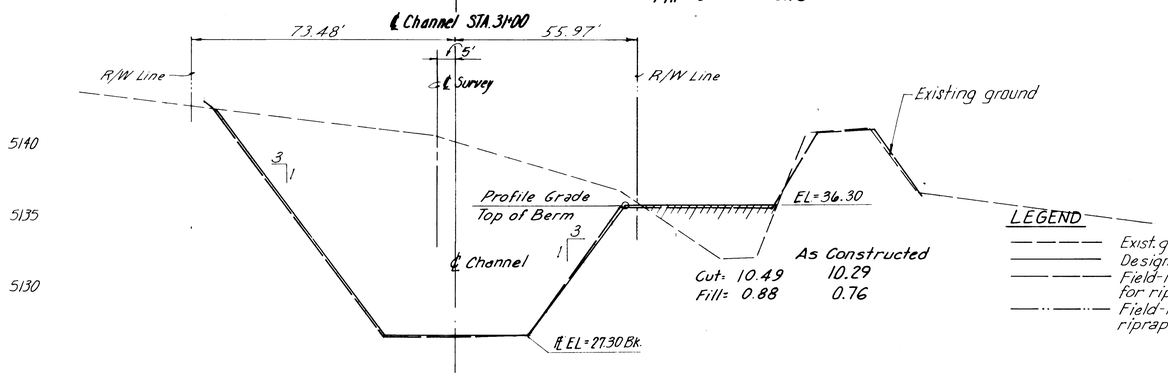

℄ Channel STA. 30+00

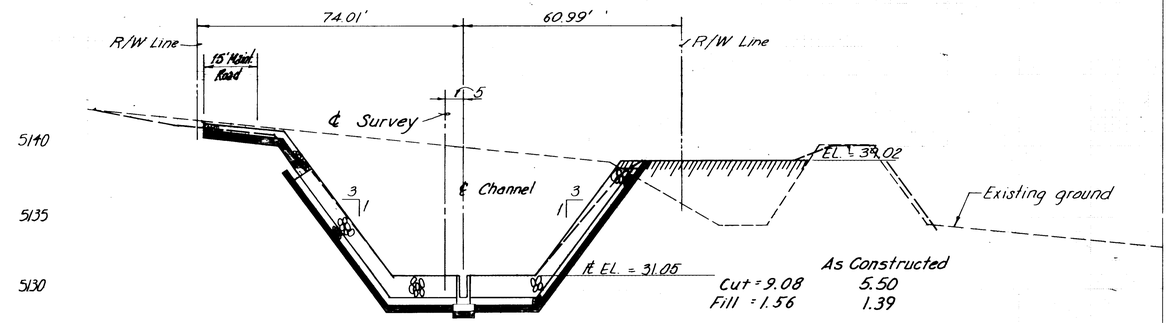

℄ Channel STA. 36+00

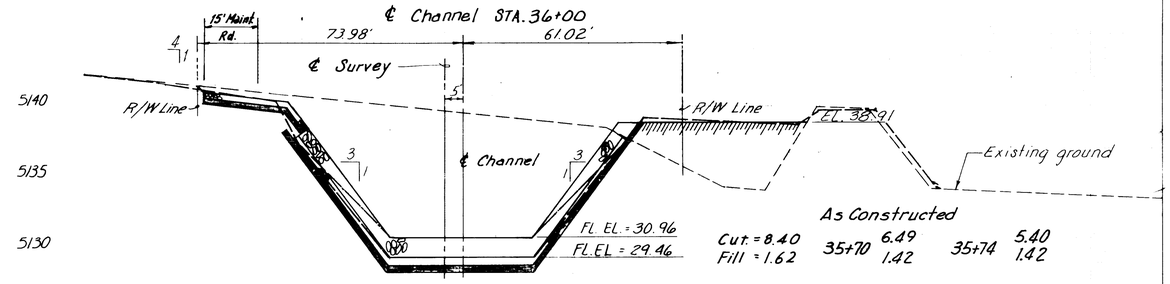

℄ Channel STA. 35+71

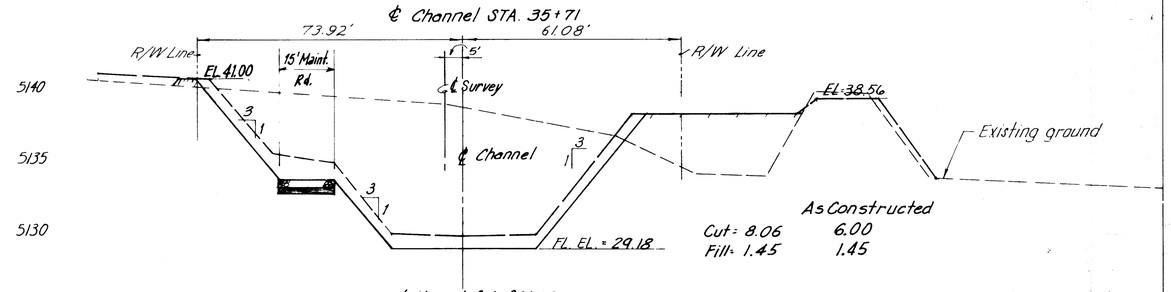

℄ Channel STA. 35+00

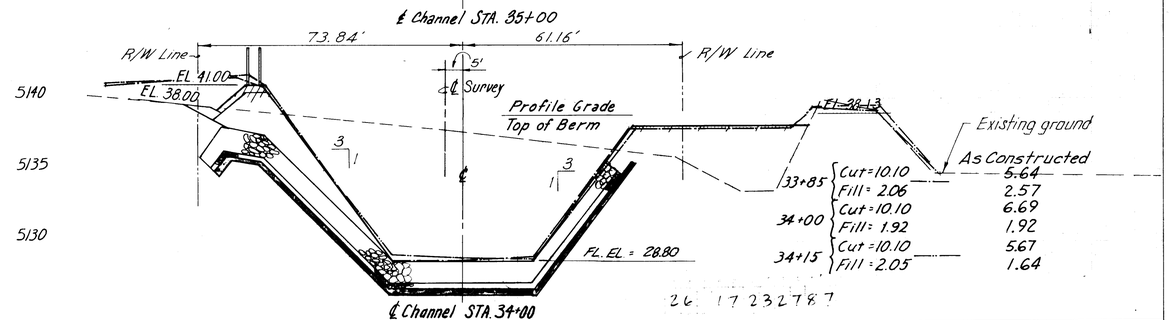

℄ Channel STA. 34+00

26 17 232787

LEGEND

- Exist. ground
- Design
- Field-Post construction at down stream for riprap structures.
- Field-Post construction upstream of riprap structure.

SCALES:
Horiz: 1" = 20'
Vert: 1" = 5'

RECORD DRAWING
Date JUL 10 1987
These drawings have been revised based on field data and every reasonable attempt has been made to depict construction as actually performed

CLINTON DEDGE NEW MEXICO 6410 REGISTERED PROFESSIONAL ENGINEER

AMAFCA
WESTGATE DIVERSION CHANNELS
SNOW VISTA CHANNEL PHASE II
CROSS SECTIONS
STA. 30+00 TO STA. 36+00

DRAWN BY	E.L.
DATE	SEPT 1986
SCALE	AS SHOWN

GORDON HERKENHOFF & ASSOCIATES, INC.
ENGINEERS • PLANNERS
ALBUQUERQUE NEW MEXICO

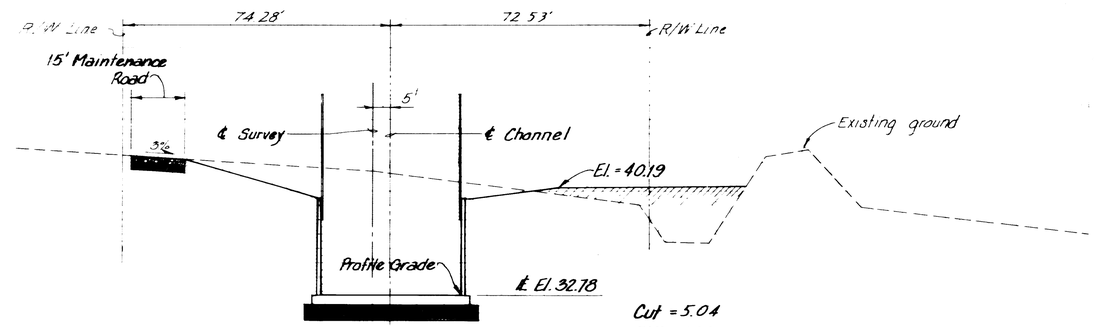

℄ Channel STA. 39+11.83

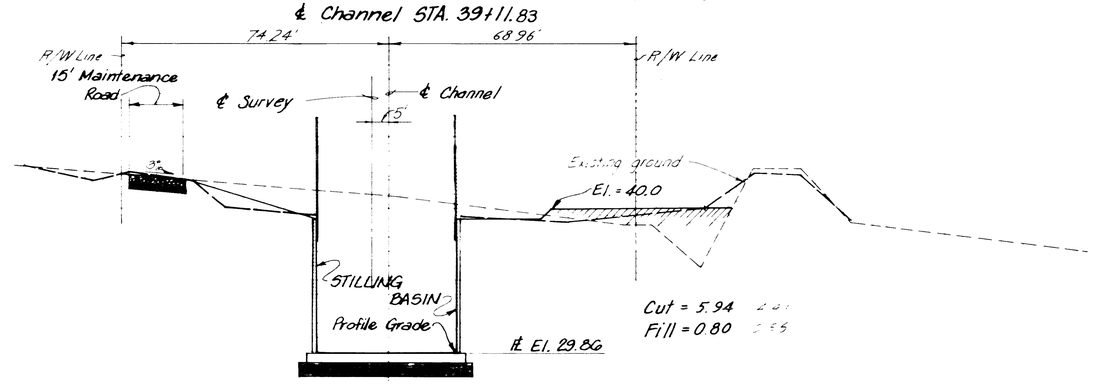

℄ Channel STA. 38+72.83

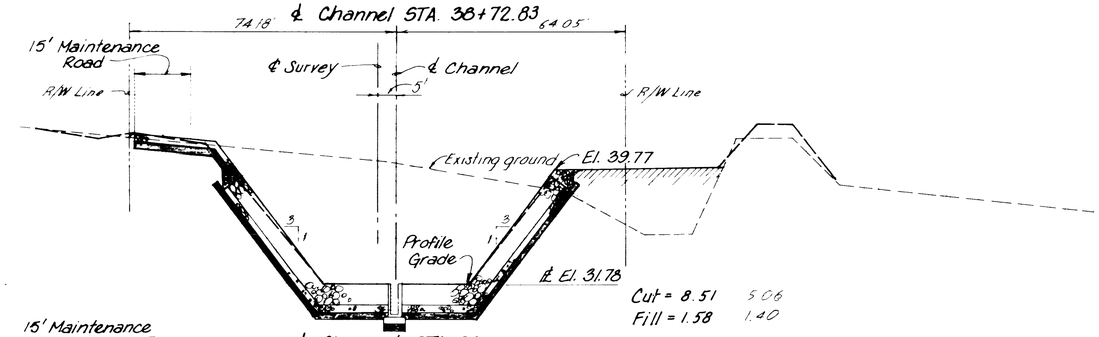

℄ Channel STA. 38+00

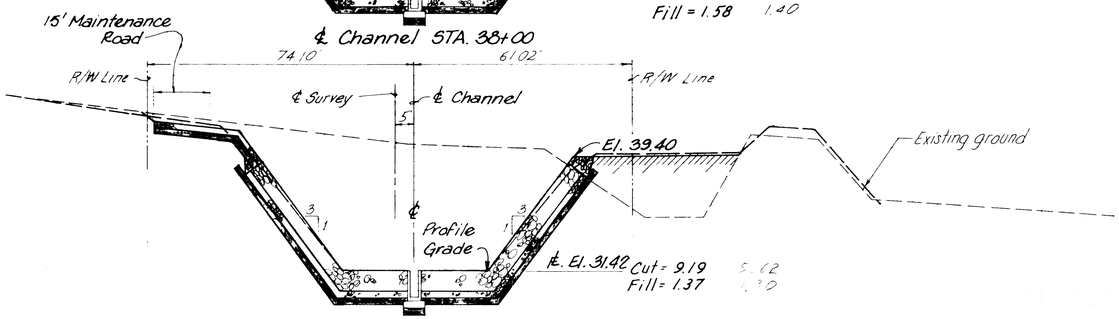

℄ Channel STA. 37+00

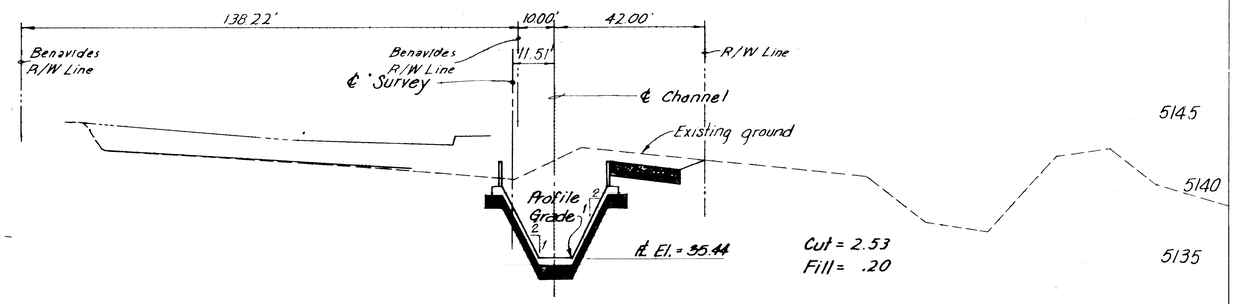

℄ Channel STA. 41+37.25

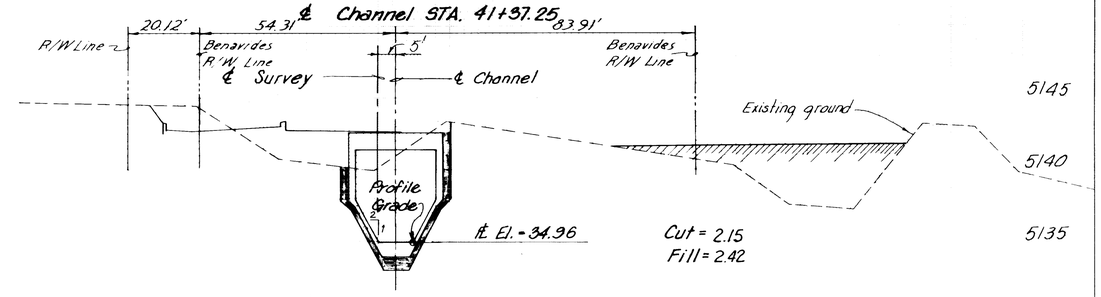

℄ Channel STA. 40+94.73

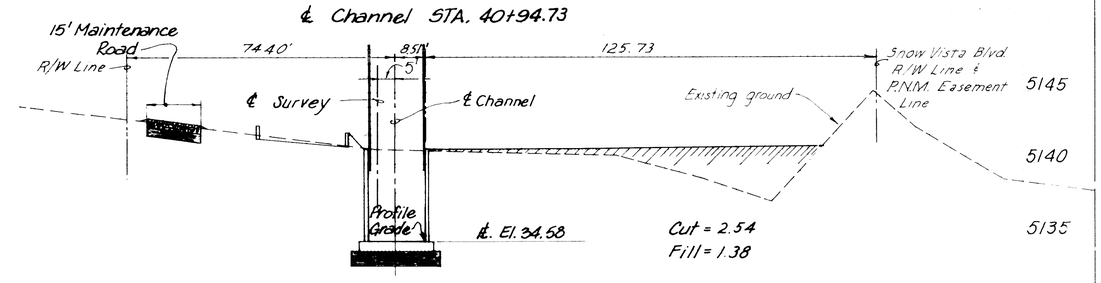

℄ Channel STA. 40+61.73

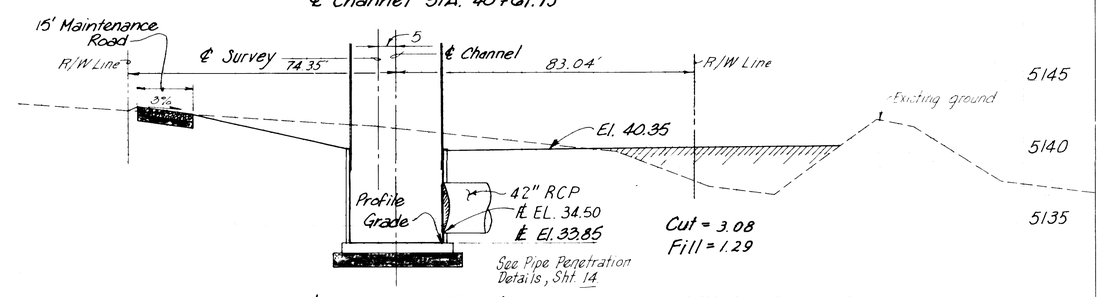

℄ Channel STA. 40+00

26 17232887

SCALE:
Horiz 1" = 20'
Vert 1" = 5'

RECORD DRAWING
Date JUL 10 1997
These drawings have been revised based on field data and every reasonable attempt has been made to depict construction as actually performed

CLINTON DODGE NEW MEXICO REGISTERED PROFESSIONAL ENGINEER

AMAFCA

WESTGATE DIVERSION CHANNELS

SNOW VISTA CHANNEL PHASE II

CROSS SECTIONS

STA. 37+00 TO STA. 41+37.25

DRAWN BY	GC
DATE	SEPT 1986
SCALE	AS SHOWN

GORDON HERKENHOFF & ASSOCIATES, INC.

ENGINEERS ARCHITECTS PLANNERS

ALBUQUERQUE SANTA FE

SHEET 28 OF 49

PLATE 3 CROSS SECTION - DOTTED

CHARLES BRUNING COMPANY MADE IN U.S.A.

BRUNING 44 132-5/899

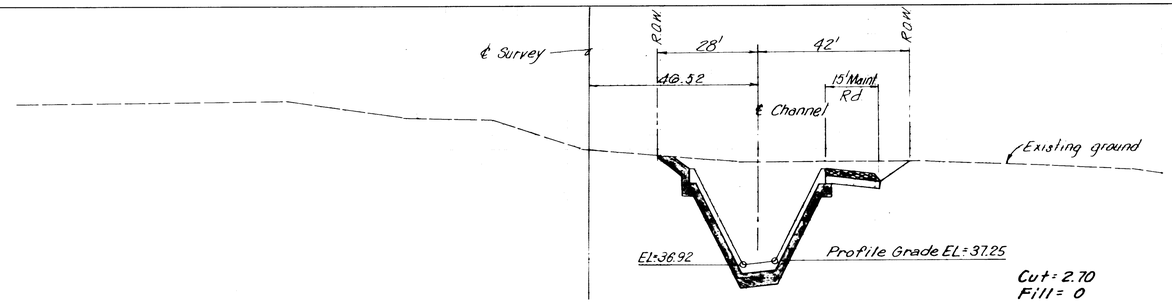

℄ Channel STA. 43+00

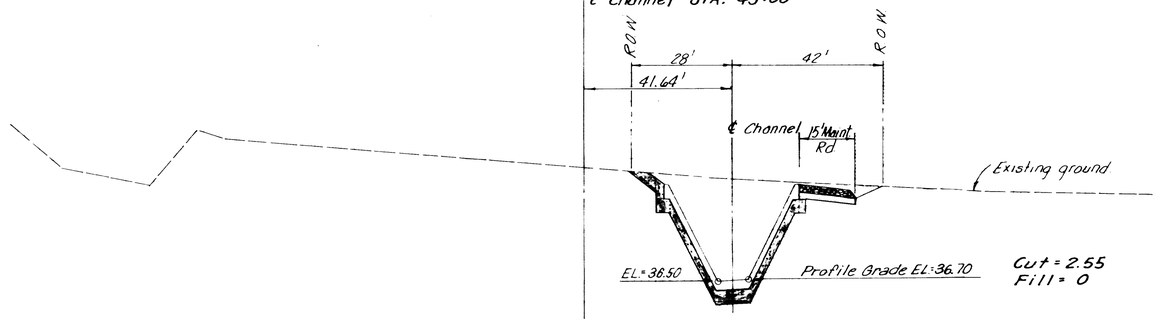

℄ Channel STA. 42+50

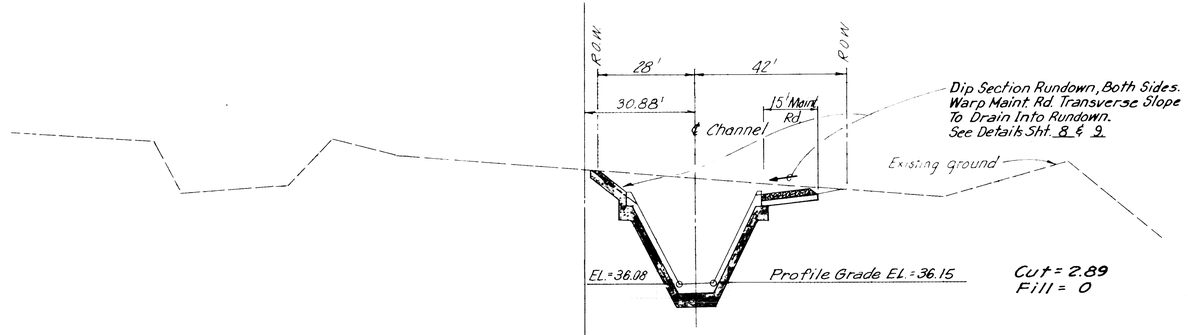

℄ Channel STA. 42+00

Note:
From Profile Grade ELevation Down To Lt. Side (West Side) Transition 10' Wide Channel Floor Slab From Flat Bottom @ Sta. 41+71.73 To A Full 6" Drop @ Sta. 43+65.13

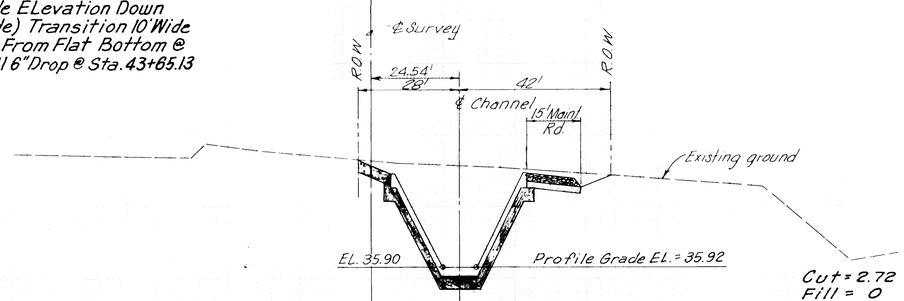

℄ Channel STA. 41+78.85

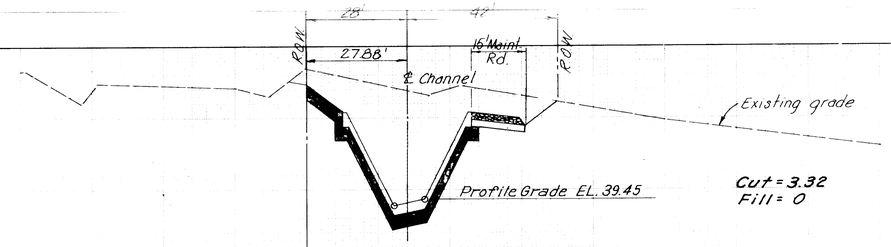

℄ Channel STA. 45+00

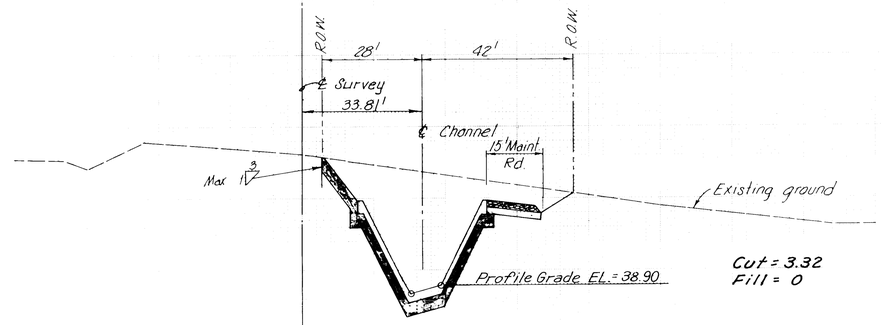

℄ Channel STA. 44+50

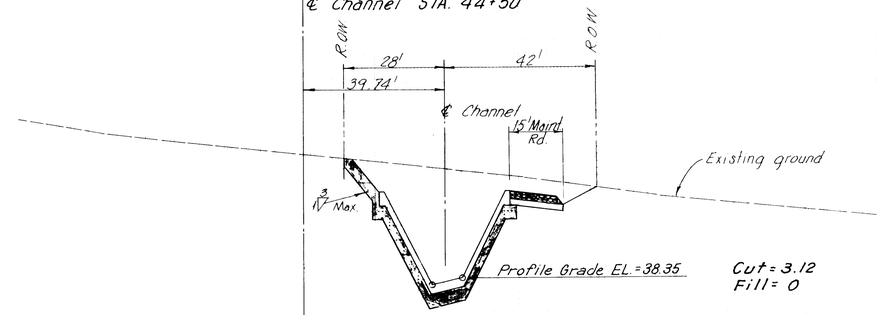

℄ Channel STA 44+00

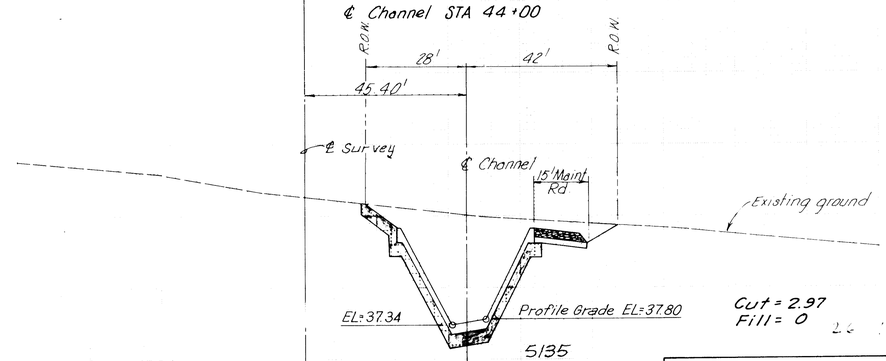

℄ Channel STA. 43+50

SCALE:
Horiz. 1" = 20'
Vert. 1" = 5'

RECORD DRAWING
Date JUL 1 0 1987
These drawings have been revised based on field data and every reasonable attempt has been made to depict construction as actually performed

FINAL SURVEY	SURVEYED	DATE
	PLOTTED	BY
	PLANIMETER AREAS	
	AREAS CHECKED	
NOTE BOOK NO.		

ORIGINAL SURVEY	SURVEYED	DATE
	PLOTTED	BY
	PLANIMETER AREAS	
	AREAS CHECKED	
NOTE BOOK NO.		

AMAFCA
WESTGATE DIVERSION CHANNELS
SNOW VISTA CHANNEL PHASE II
CROSS SECTIONS
STA. 41+78.85 TO STA. 45+00

DRAWN BY	G.C.
DATE	SEPT. 1986
SCALE	AS SHOWN

GORDON HERKENHOFF & ASSOCIATES, INC.
ENGINEERS ARCHITECTS PLANNERS
ALBUQUERQUE SANTA FE

PLATE 3 CROSS SECTION - DOTTED
CHARLES BRUNING COMPANY
MADE IN U.S.A.

BRUNING 44 132-52699

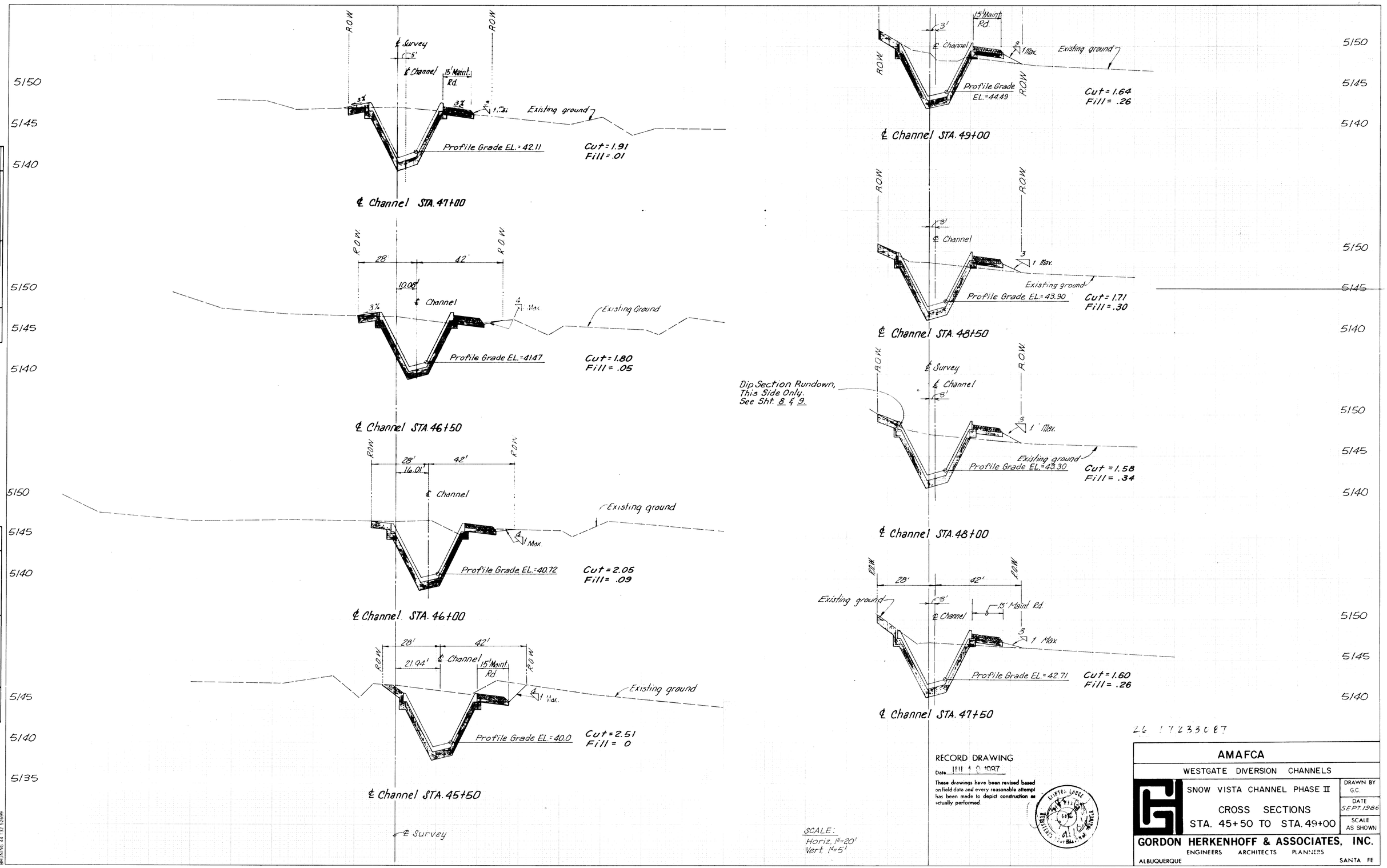

FINAL SURVEY	DATE	BY
SURVEYED		
PLOTTED		
TEMPLATE		
AREAS		
AREAS CHECKED		
NOTE BOOK		
NO.		

ORIGINAL SURVEY	DATE	BY
SURVEYED		
PLOTTED		
TEMPLATE		
AREAS		
AREAS CHECKED		
NOTE BOOK		
NO.		

RECORD DRAWING

Date 11 1 0 1987

These drawings have been revised based on field data and every reasonable attempt has been made to depict construction as actually performed

26 17233087

AMAFCA

WESTGATE DIVERSION CHANNELS

SNOW VISTA CHANNEL PHASE II

CROSS SECTIONS

STA. 45+50 TO STA. 49+00

DRAWN BY G.C.

DATE SEPT. 1986

SCALE AS SHOWN

GORDON HERKENHOFF & ASSOCIATES, INC.

ENGINEERS ARCHITECTS PLANNERS

ALBUQUERQUE SANTA FE

SHEET 30 OF 49

PLATE 3 CROSS SECTION - DOTTED

CHARLES BRUNING COMPANY MADE IN U.S.A.

BRUNING 44.132 52699

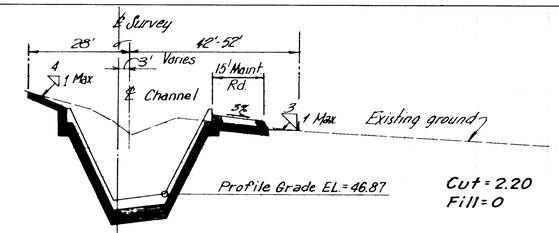

℄ Channel STA. 51+00

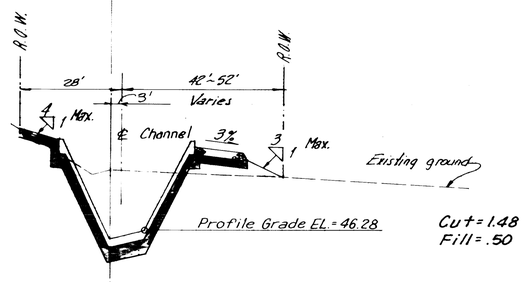

℄ Channel STA. 50+50

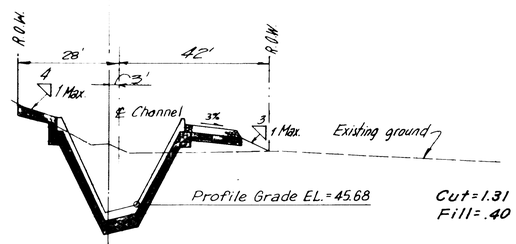

℄ Channel STA. 50+00

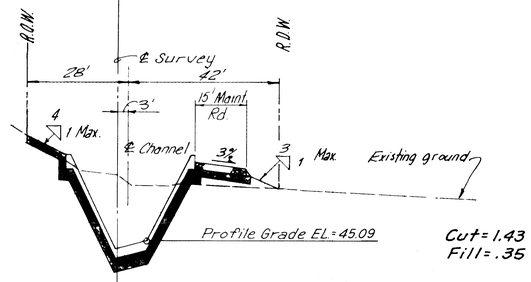

℄ Channel STA. 49+50

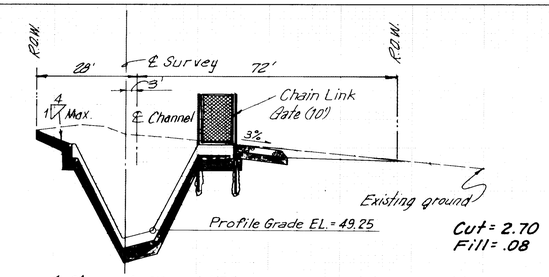

℄ Channel STA. 53+00

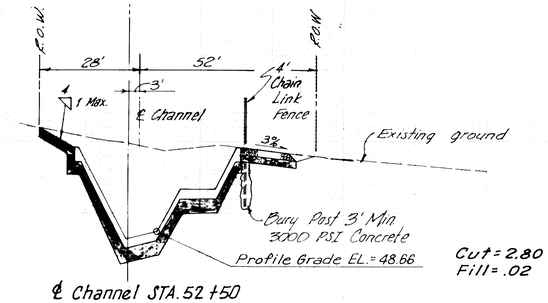

℄ Channel STA. 52+50

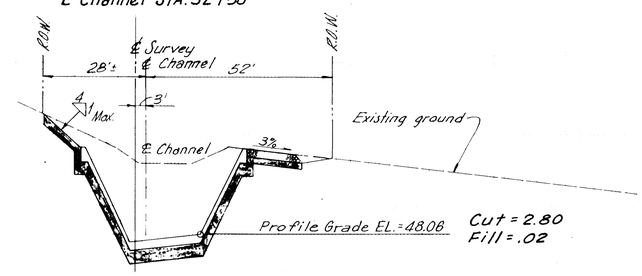

℄ Channel STA. 52+00

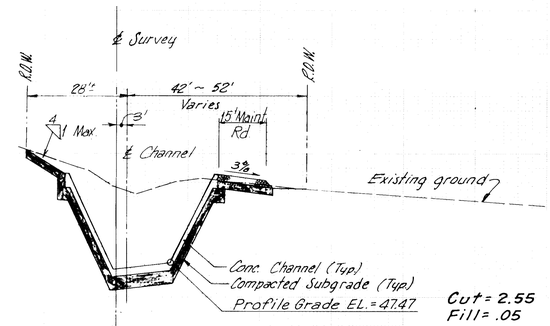

℄ Channel STA. 51+50

5160
5155
5150
5145
5140

RECORD DRAWING
Date 1111 1 0 1997

These drawings have been revised based on field data and every reasonable attempt has been made to depict construction as actually performed.

SCALE:
Horiz. 1" = 20'
Vert 1" = 5'

FINAL SURVEY	SURVEYED	BY	DATE
	PLOTTED		
	TEMPLATE		
	AREAS		
	AREAS CHECKED		
	NOTE BOOK		
	NO.		

ORIGINAL SURVEY	SURVEYED	BY	DATE
	PLOTTED		
	TEMPLATE		
	AREAS		
	AREAS CHECKED		
	NOTE BOOK		
	NO.		

AMAFCA

WESTGATE DIVERSION CHANNELS

SNOW VISTA CHANNEL PHASE II

CROSS SECTIONS

STA. 49+50 TO STA. 53+00

DRAWN BY G. C.

DATE SEPT. 1986

SCALE AS SHOWN

GORDON HERKENHOFF & ASSOCIATES, INC.

ENGINEERS ARCHITECTS PLANNERS

ALBUQUERQUE SANTA FE

PLATE 3 CROSS SECTION - DOTTED

CHARLES BRUNING COMPANY MADE IN U.S.A.

BRUNING 44 132 52699

SHEET 31 OF 49

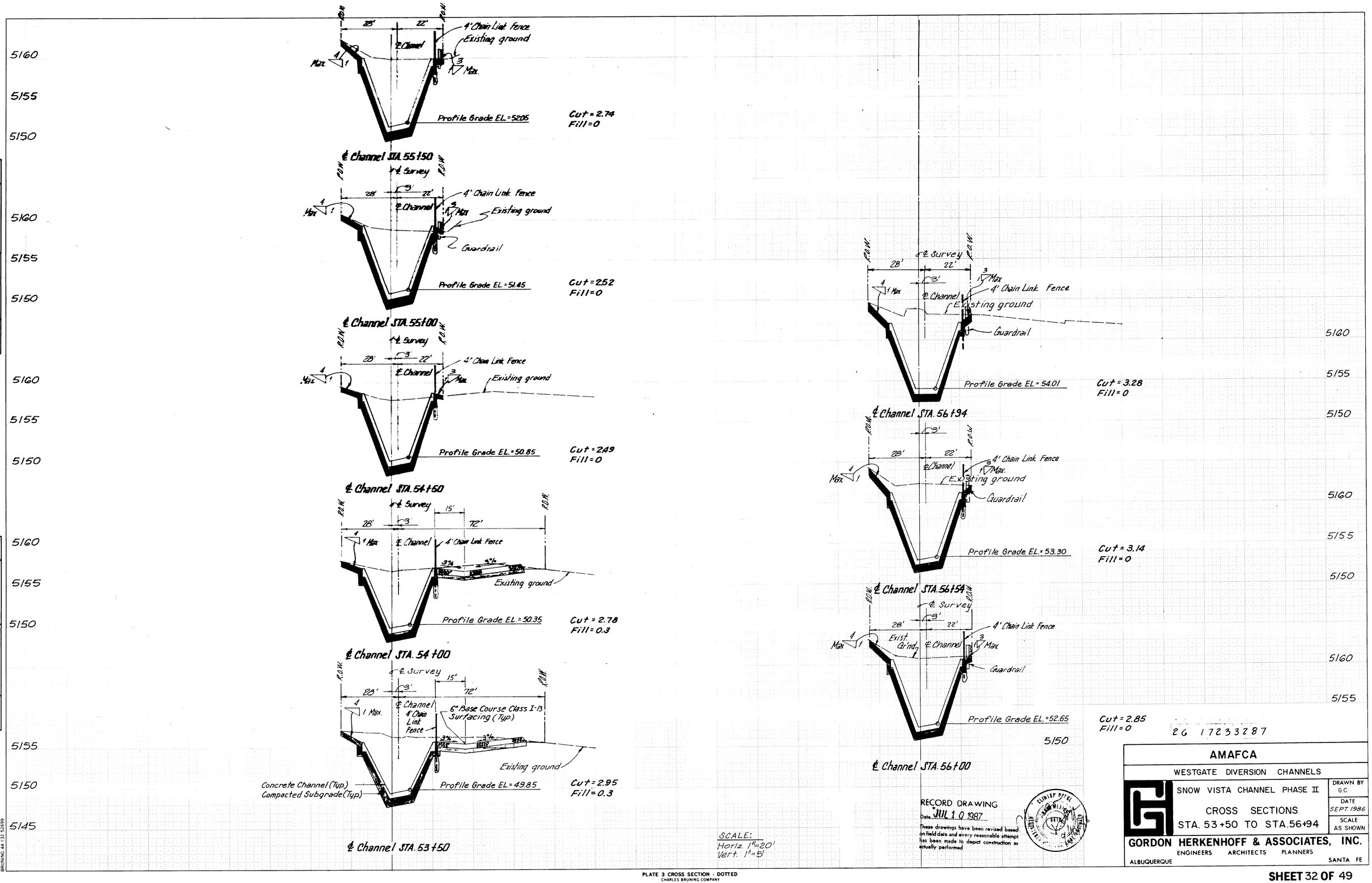

SCALE:
Horiz. 1"=20'
Vert. 1"=5'

RECORD DRAWING
Date JUL 10 1987
These drawings have been revised based on field data and every reasonable attempt has been made to depict construction as actually performed

26 17233287

AMAFCA

WESTGATE DIVERSION CHANNELS

SNOW VISTA CHANNEL PHASE II

CROSS SECTIONS
STA. 53+50 TO STA. 56+94

DRAWN BY G.C.
DATE SEPT. 1986
SCALE AS SHOWN

GORDON HERKENHOFF & ASSOCIATES, INC.
ENGINEERS ARCHITECTS PLANNERS
ALBUQUERQUE SANTA FE

FINAL SURVEY — NOTE BOOK NO. — SURVEYED, PLOTTED, SURFACE AREAS, AREAS CHECKED — BY — DATE

ORIGINAL SURVEY — NOTE BOOK NO. — SURVEYED, PLOTTED, SURFACE AREAS, AREAS CHECKED — BY — DATE

BRUNING 44 132 52699

PLATE 3 CROSS SECTION - DOTTED
CHARLES BRUNING COMPANY
MADE IN U.S.A.

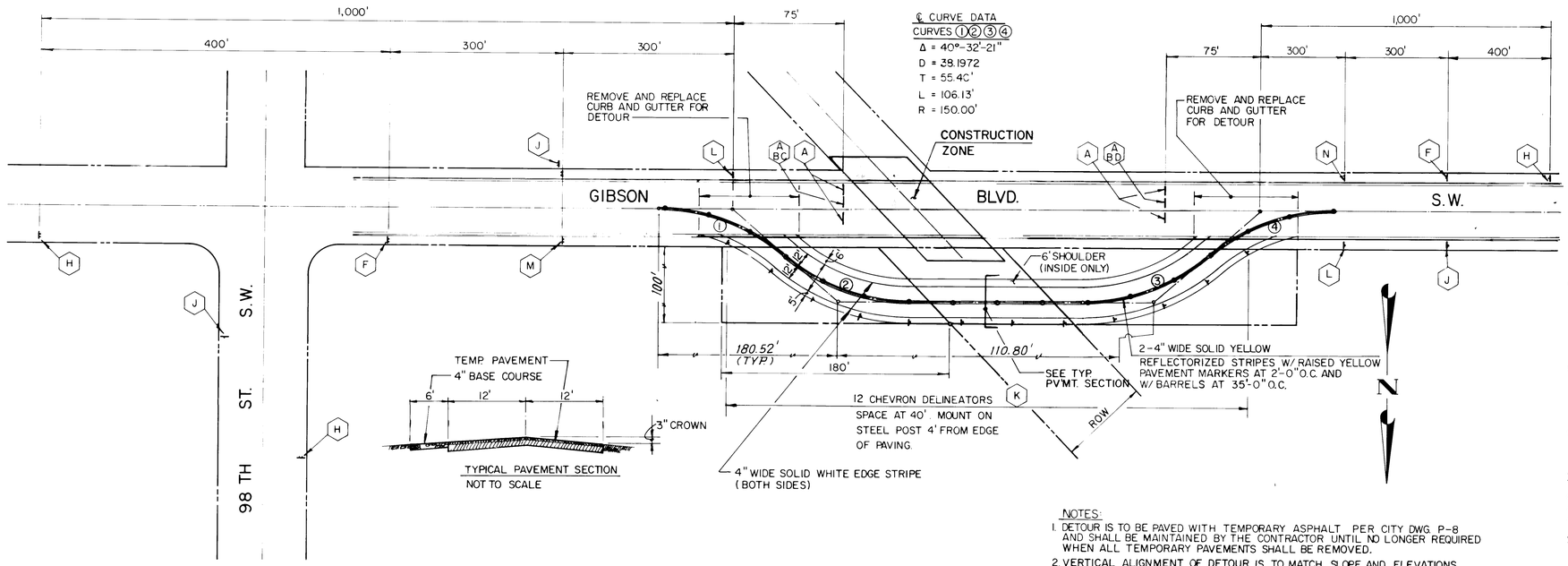

TRAFFIC DETOUR PLAN

NOT TO SCALE

NOTES:

1. DETOUR IS TO BE PAVED WITH TEMPORARY ASPHALT PER CITY DWG. P-8 AND SHALL BE MAINTAINED BY THE CONTRACTOR UNTIL NO LONGER REQUIRED WHEN ALL TEMPORARY PAVEMENTS SHALL BE REMOVED.
2. VERTICAL ALIGNMENT OF DETOUR IS TO MATCH SLOPE AND ELEVATIONS OF GIBSON BLVD.

GENERAL NOTES:

1. All traffic control devices shall comply with Chapter VI of the 1978 edition Manual for Uniform Traffic Control Devices, with latest revisions.
2. The Contractor shall prepare and submit to the Project Engineer a detailed detour plan which must be approved by the City Traffic Engineer 3 working days in advance of any lane closures other than those shown on these plans.
3. All signs shall be mounted so that the bottom of the sign is 7 feet above ground or top of curb level and be in place before construction begins.
4. Sign locations will be selected in the field and approved by the Project Engineer. Distances between signs may be adjusted for local conditions.
5. All signs will be ground mounted on single or double posts. Existing posts may be used at some locations, with the approval of the Project Engineer. Portable sign supports are an acceptable alternate.
6. The Contractor shall maintain access to businesses and residences adjacent to the construction area at all times.
7. When barriers are required after dark, all advance warning signs and all barricades shall be equipped with flashing warning lights (Type A), except that all channelizing devices shall have steady burning lights (Type C).
8. Any existing regulatory signs that need to be removed, relocated or reinstalled shall be done by City of Albuquerque Traffic Engineering Division. The Contractor shall notify the Traffic Engineering Division 3 working days in advance of any required work.
9. The Contractor shall provide and maintain a safe and adequate means of channeling pedestrian traffic around all construction areas.

TRAFFIC CONTROL

GIBSON BLVD. will be closed from the west edge of the Circle K parking apron for the next 200' West. Traffic on Gibson will be routed onto a detour on the north side of Gibson.

MIMBRES ST. will be closed between Jenaro St. and Gibson.

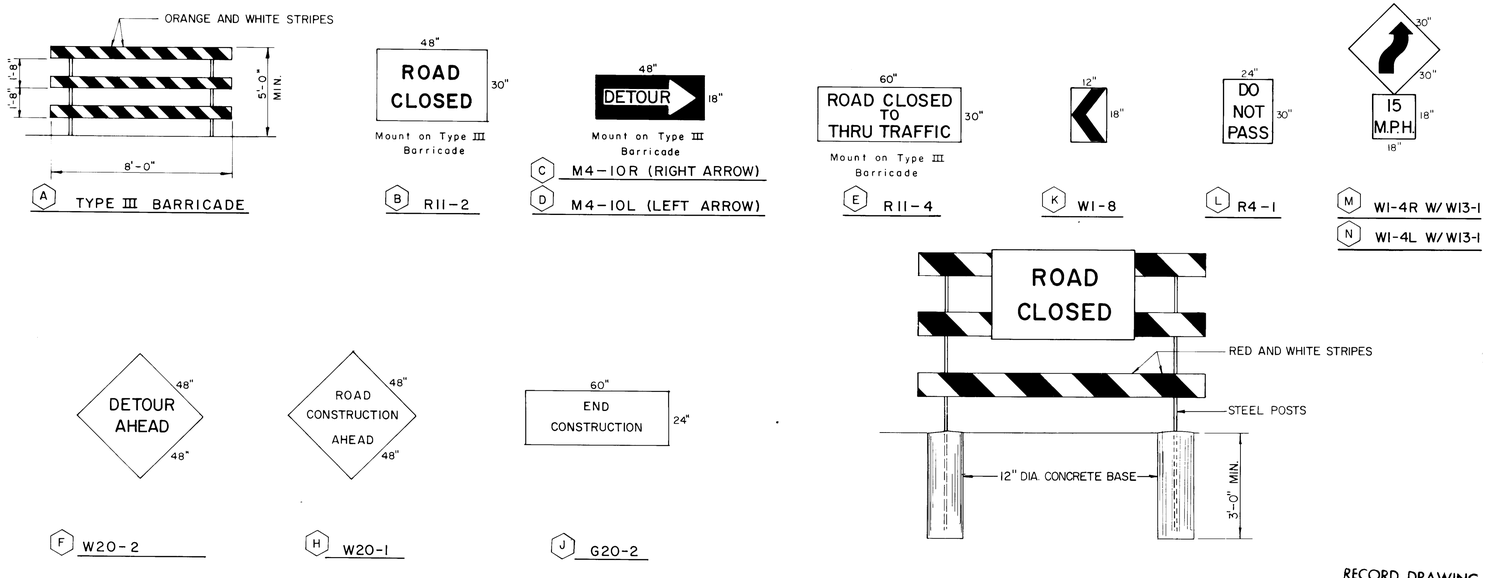

PERMANENT MOUNTING - TYPE III BARRICADE W/ R11-2

PERMANENT BARRICADES:

Type III Barricades with Road Closed (R11-2) signs shall be permanently installed at the following locations or as directed by the Engineer in accordance with the detail shown on this sheet.

Dedicated Street	Approximate Channel ℄ STA	Approximate Location
DeAnza Dr. S.W.	13+60 13+90	50'Rt. 50'Lt.
Redondo Rd. S.W.	30+50	65'Lt.
98th Street Extension	45+15 46+00	55'Lt. 55'Rt.
Eucariz Road S.W.	96+91 97+08	25'Lt. 35'Rt.
Camino San Martin (Unplatted)	27+00	50'Lt.

26 17233387

RECORD DRAWING
Date 11/14/87
These drawings have been revised based on field data and every reasonable attempt has been made to depict construction as actually performed

AMAFCA

WESTGATE DIVERSION CHANNELS

SNOW VISTA CHANNEL PHASE II

TRAFFIC DETOUR PLAN AND SIGN DETAILS

DRAWN BY RDM. & J.C.D.
DATE SEPT. 1986
SCALE AS SHOWN

GORDON HERKENHOFF & ASSOCIATES, INC.
ENGINEERS ARCHITECTS PLANNERS
ALBUQUERQUE SANTA FE

BRUNING 34.326

GORDON HERKENHOFF & ASSOC. INC.
Albuquerque, New Mexico (505) 247-0294

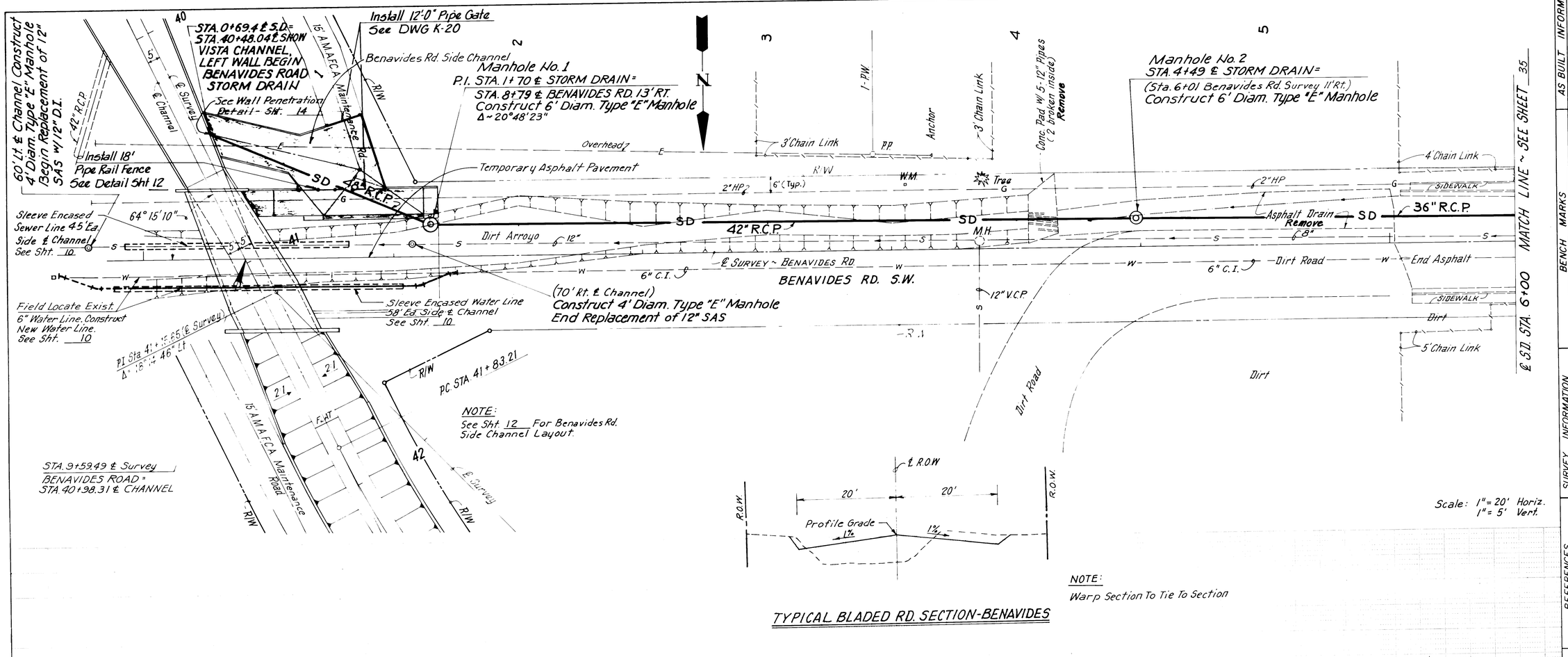

NOTE:
Warp Section To Tie To Section

TYPICAL BLADED RD. SECTION-BENAVIDES

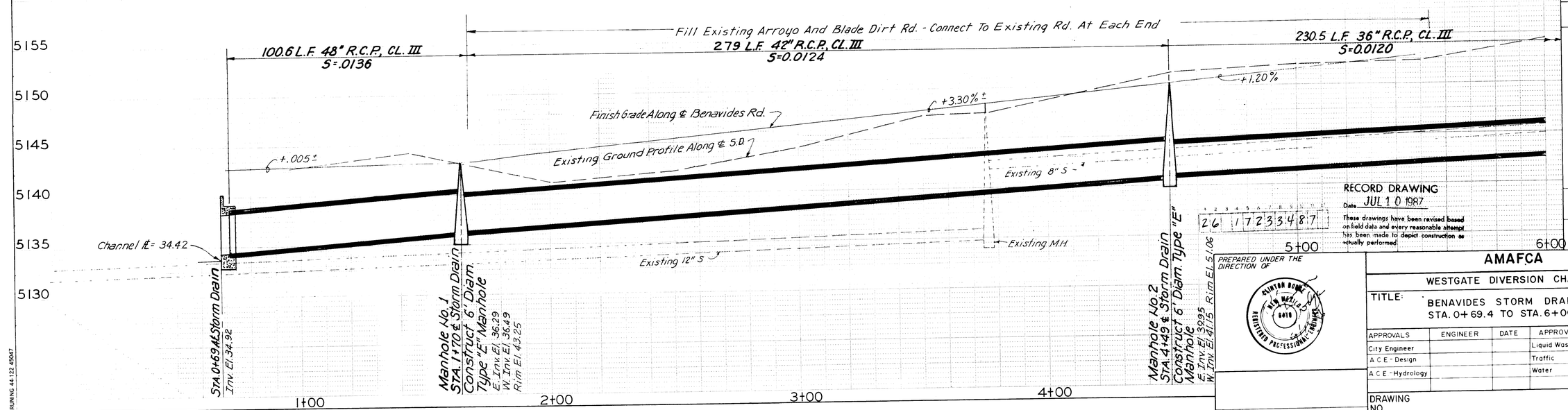

RECORD DRAWING
Date JUL 10 1987
These drawings have been revised based on field data and every reasonable attempt has been made to depict construction as actually performed.

PREPARED UNDER THE DIRECTION OF
CLINTON BOWEN NEW MEXICO 6018 REGISTERED PROFESSIONAL ENGINEER

CITY ENGINEER DATE

PROJECT NO.

AMAFCA

WESTGATE DIVERSION CHANNELS

TITLE: BENAVIDES STORM DRAIN STA. 0+69.4 TO STA. 6+00

APPROVALS	ENGINEER	DATE	APPROVALS	ENGINEER	DATE
City Engineer			Liquid Waste		
A.C.E.-Design			Traffic		
A.C.E.-Hydrology			Water		

DRAWING NO.

SHEET 34 OF 49

AS BUILT INFORMATION: CONTRACTOR, WORK STAKED BY, INSPECTOR'S ACCEPTANCE BY, FIELD VERIFICATION BY, DRAWINGS CORRECTED BY, MICRO-FILM INFORMATION, RECORDED BY, NO. — DATE

BENCH MARKS: See Sheet 2

SURVEY INFORMATION: FIELD NOTES, NO., BY, DATE

REFERENCES: MAP NO., EST. NO., W.O. NO.

REVISIONS: NO., DATE, REMARKS, BY

DESIGN: DESIGNED BY D.D. DATE; DRAWN BY H.E. DATE; CHECKED BY C.D. DATE

BRUNING 44-122 45047

GORDON HERKENHOFF & ASSOC. INC.
Albuquerque, New Mexico (505) 247-0294

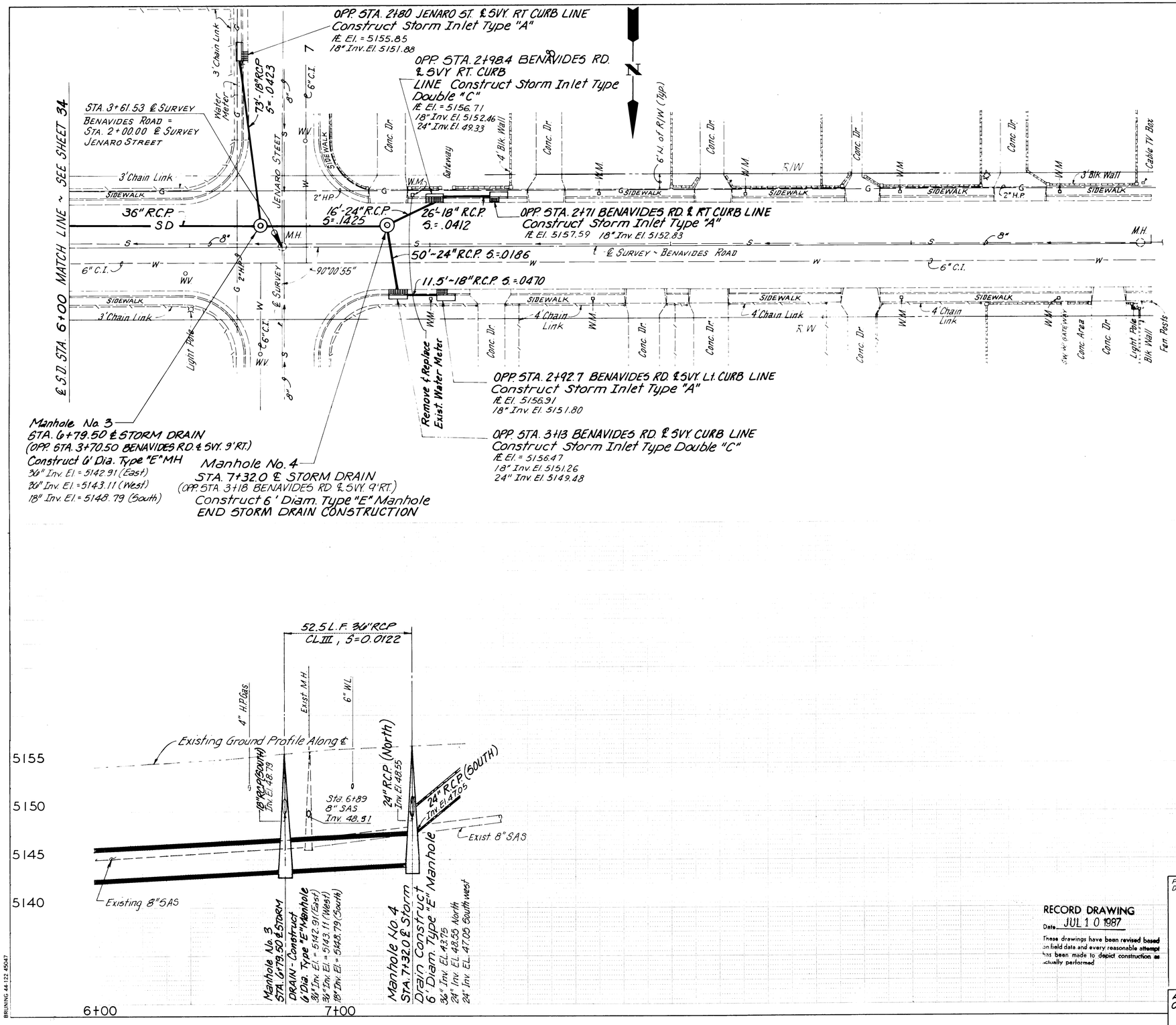

Scale: 1" = 20' Horiz.
1" = 5' Vert.

BRUNING 44-122 45047

RECORD DRAWING
Date JUL 10 1987
These drawings have been revised based on field data and every reasonable attempt has been made to depict construction as actually performed

PROJECT NO

PREPARED UNDER THE DIRECTION OF
CLINTON BODE, NEW MEXICO, REGISTERED PROFESSIONAL ENGINEER

APPROVED FOR CONSTRUCTION
CITY ENGINEER DATE

26 17233587

AS BUILT INFORMATION
CONTRACTOR / WORK STAKED BY / INSPECTOR'S ACCEPTANCE BY / FIELD VERIFICATION BY / DRAWINGS CORRECTED BY — DATE
MICRO-FILM INFORMATION
RECORDED BY — DATE
NO.

BENCH MARKS
SEE SHEET 2

SURVEY INFORMATION
FIELD NOTES
NO. BY DATE

REFERENCES
MAP NO.
EST. NO.
W.O. NO.

REMARKS
REVISIONS
NO. DATE BY

DESIGN
DESIGNED BY D.D. DATE
DRAWN BY H.E. DATE
CHECKED BY C.D. DATE

AMAFCA
WESTGATE DIVERSION CHANNELS
TITLE: BENAVIDES STORM DRAIN
STA. 6+00 TO STA. 7+32

APPROVALS	ENGINEER	DATE	APPROVALS	ENGINEER	DATE
City Engineer			Liquid Waste		
A.C.E. - Design			Traffic		
A.C.E. - Hydrology			Water		

DRAWING NO.
SHEET 35 OF 49

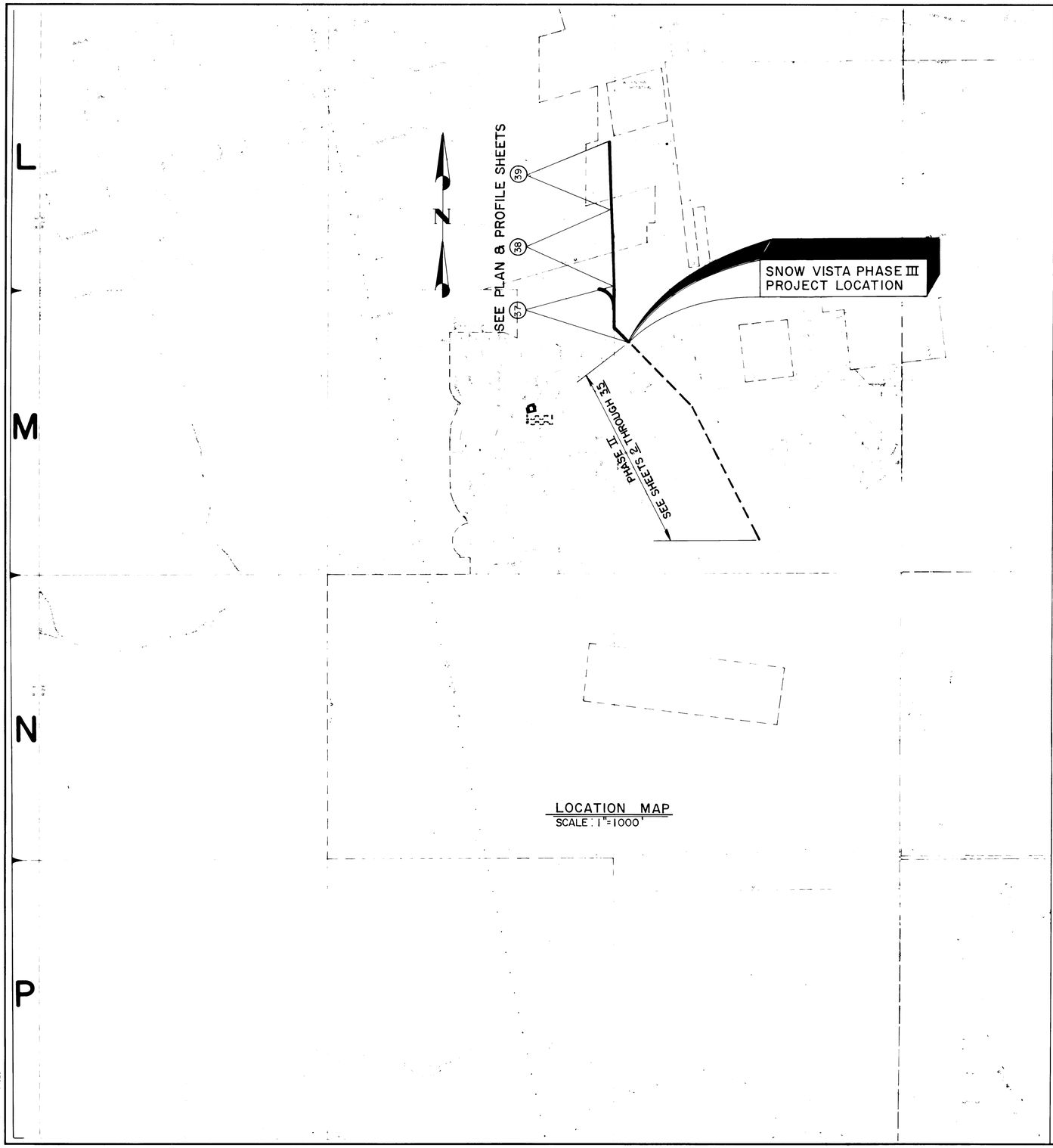

LOCATION MAP
SCALE: 1"=1000'

CONCRETE NOTES

1. CONCRETE FOR CHANNEL LINING AND CHANNEL APPURTENANCES SHALL BE CLASS 'E' UNLESS OTHERWISE SPECIFICALLY SHOWN ON THE PLANS.
2. REINFORCING SHALL CONFORM TO THE REQUIREMENTS OF ASTM A615 GRADE 60.
3. UNLESS OTHERWISE NOTED, LAPS, SPLICES OR EMBEDMENT LENGTHS SHALL CONFORM TO TABLE 20.1 ACI MANUAL SP-17 CLASS B SPLICE.
4. UNLESS OTHERWISE NOTED, CONCRETE COVER OVER STEEL SHALL BE 2" FOR FORMED CONCRETE AND 3" FOR CONCRETE CAST AGAINST EARTH.
5. REINFORCING SHALL BE CONTINUOUS AROUND ALL CORNERS UNLESS SHOWN OTHERWISE.
6. UNLESS OTHERWISE SHOWN, ALL EXPOSED CORNERS SHALL HAVE 3/4" CHAMFER OR TOOLED EDGE AS DIRECTED.
7. CHANNEL REBAR SHALL BE SUPPORTED ON 3 1/2" SAND CHAIRS AT A MAXIMUM SPACING OF 5' PERPENDICULAR TO THE CHANNEL CENTERLINE.

GENERAL NOTES

1. TWO (2) WORKING DAYS PRIOR TO ANY EXCAVATION, CONTRACTOR MUST CONTACT LINE LOCATING SERVICE, 765-1234, FOR LOCATION OF EXISTING UTILITIES.
2. PRIOR TO CONSTRUCTION, THE CONTRACTOR SHALL EXCAVATE AND VERIFY THE HORIZONTAL AND VERTICAL LOCATIONS OF ALL OBSTRUCTIONS. SHOULD A CONFLICT EXIST, THE CONTRACTOR SHALL NOTIFY THE ENGINEER SO THAT THE CONFLICT CAN BE RESOLVED WITH MINIMUM AMOUNT OF DELAY.
3. ALL NEW STREET PAVING, DRIVEWAYS, SIDEWALKS, AND CURB AND GUTTERS ABUTTING EXISTING AREAS SHALL MATCH THE ELEVATION OF THOSE AREAS.
4. THE CONTRACTOR SHALL ASSUME RESPONSIBILITY FOR ANY DAMAGE TO EXISTING PAVING OR CURB AND GUTTER DURING CONSTRUCTION, APART FROM THOSE SECTIONS INDICATED FOR REMOVAL ON THE PLANS, AND SHALL REPAIR OR REPLACE SAME AT HIS OWN EXPENSE. HE SHALL SUITABLY PROTECT THE CURB AND GUTTER FROM INCIDENTAL SPLASHING DURING THE TACK COAT APPLICATION AND SHALL BE RESPONSIBLE FOR CLEANING SAME AT HIS OWN COST SHOULD SPLASHING OCCUR.
5. ALL UTILITY LINES WHICH ARE NOT SPECIFICALLY DESIGNATED TO BE REMOVED AND REPLACED ON THE PLANS SHALL BE MAINTAINED IN SERVICE. SHORING, SHEETING, AND OTHER MEANS OF SUPPORT SHALL BE EMPLOYED BY THE CONTRACTOR TO PREVENT DAMAGE OR LOSS OF THESE EXISTING UTILITIES. BEAM AND CABLE OR OTHER ADEQUATE SUPPORTS SHALL BE USED FOR TEMPORARY SUPPORT OF ALL UTILITY LINES WHICH CROSS TRENCHES. ANY DAMAGE TO EXISTING UTILITIES SHALL PROMPTLY BE REPAIRED AT THE CONTRACTOR'S EXPENSE. THE ENGINEER SHALL BE IMMEDIATELY NOTIFIED OF ANY SIGNIFICANT DEVIATION OF EXPOSED UTILITIES FROM THE LOCATIONS SHOWN ON THE PLANS SO THAT CONFLICTS CAN BE RESOLVED IN A TIMELY MANNER.
6. ALL CHANNEL STEPS SHALL BE 1/2" GRADE 60 STEEL REINFORCING ROD ENCAPSULATED IN A CO-POLYMER POLYPROPYLENE AS MANUFACTURED BY M.A. INDUSTRIES, INC. (MODEL #P-2-PFS). STEPS ARE NOT TO BE PRECAST IN PLACE BUT SHALL BE INSTALLED AS RECOMMENDED BY THE MANUFACTURER.
7. RIGHT-OF-WAY SHOWN IS APPARENT RIGHT-OF-WAY DETERMINED FROM PLAT MAPS AND LOCATED PROPERTY TIES.
8. THE CONTRACTOR IS TO COORDINATE UTILITY RELOCATIONS TO BE PERFORMED BY OTHERS DURING ALL PHASES OF CONSTRUCTION.
9. ALL DISTURBED AREAS WITH SLOPES EQUAL TO OR FLATTER THAN 4H:1V SHALL BE SEEDED WITH CLASS 'A' SEEDING, AND ALL DISTURBED AREAS WITH SLOPES STEEPER THAN 4H:1V AND ALL DISTURBED AREAS WEST OF THE CONCRETE CHANNEL WITHIN THE PERMANENT ROW SHALL BE SEEDED WITH CLASS 'B' SEEDING, UNLESS OTHERWISE DIRECTED BY THE ENGINEER.

HYDROLOGIC AND SYSTEM REFERENCE

WILLIAM MATOTAN & ASSOCIATES, "DRAINAGE MANAGEMENT PLAN, WESTERN ALBUQUERQUE METROPOLITAN AREA", 1975.

GORDON HERKENHOFF AND ASSOCIATES, "PRELIMINARY DESIGN ANALYSES, WESTGATE DIVERSION CHANNELS", APRIL 1980.

GORDON HERKENHOFF AND ASSOCIATES, "INTERIM DESIGN REPORT, WESTGATE DIVERSION CHANNELS", DECEMBER 1980.

GORDON HERKENHOFF AND ASSOCIATES, "FINAL DESIGN REPORT, SNOW VISTA CHANNEL PHASE III", JULY 1982.

DRAINAGE AREAS AND DESIGN DISCHARGES ARE SHOWN AT POINTS OF CONFLUENCE ON THESE CONSTRUCTION DRAWINGS. THE HYDRAULIC INFORMATION IS SHOWN FOR ULTIMATE DEVELOPMENT.

HYDRAULIC PROFILE LEGEND

Qp 100	100 YR. RETURN FREQUENCY DISCHARGE
Dn	NORMAL FLOW DEPTH
Vn	NORMAL FLOW VELOCITY
Dc	CRITICAL FLOW DEPTH
Fr	FROUDE NUMBER
n	MANNING'S FRICTION FACTOR

REACH	1A	1B	2A	3A
PROFILE TYPE	STA. 58+07.01 TO STA. 58+68.77 SUPERCRITICAL TRANSITION	STA. 58+68.77 TO STA. 65+50 SUPERCRITICAL	STA. 65+50 TO STA. 65+91.26 SUPERCRITICAL CONTRACTION	STA. 65+91.26 TO STA. 76+00 FOREWATER
GRADIENT	0.02428	0.02428	0.0225	0.01193 & 0.0126
Qp 100(CFS)	810	810	774	484
n	0.013	0.013	0.013	0.013
D or Dn(FT)	2.44	2.25	3.1	2.05
V or Vn(FPS)	24.36	24.8	15.24	16.79
Dc(FT)	4.64	4.39	4.39	3.32
Fr	3.11	3.33	1.82	2.35
		S.E. 0.42'		

REACH	3B	3C	3D	4A SIDE CHANNEL
PROFILE TYPE	STA. 76+00 TO STA. 81+00 FOREWATER	STA. 81+00 TO STA. 86+00 FOREWATER	STA. 86+00 TO STA. 97+50 FOREWATER	STA. 1+16.74 TO STA. 4+64.94 FOREWATER
GRADIENT	0.0040	0.0140	0.0109	0.0316
Qp 100(CFS)	484	484	484	290
n	0.013	0.013	0.013	0.013
D or Dn(FT)	3.01	2.24	2.36	1.20
V or Vn(FPS)	11.23	17.38	16.08	19.47
Dc(FT)	3.32	3.32	3.32	2.49
Fr	1.38	2.46	2.22	3.42
				S.E. 0.87'

BENCH MARKS

TOP N.W. BOLT F.H. GIBSON & DEL MASTRO DR. S.W. ELEV 5176.96

#5-M9 "X", N.E. BONNET BOLT F.H. ON W. SIDE 98TH ST. S.W. 150' N. INTERSECTION OF GIBSON BLVD. S.W. & 98TH ST. S.W. ELEV. 5150.917

26 17 233687

REVISED 11/6/86

RECORD DRAWING
Date JUL 10 1987
These drawings have been revised based on field data and every reasonable attempt has been made to depict construction as actually performed

AMAFCA

WESTGATE DIVERSION CHANNELS

SNOW VISTA CHANNEL PHASE III

LOCATION MAP AND GENERAL NOTES

DRAWN BY	D.C.
DATE	AUG 1986
SCALE	AS SHOWN

GORDON HERKENHOFF & ASSOCIATES, INC.
ENGINEERS ARCHITECTS PLANNERS
ALBUQUERQUE FARMINGTON SANTA FE

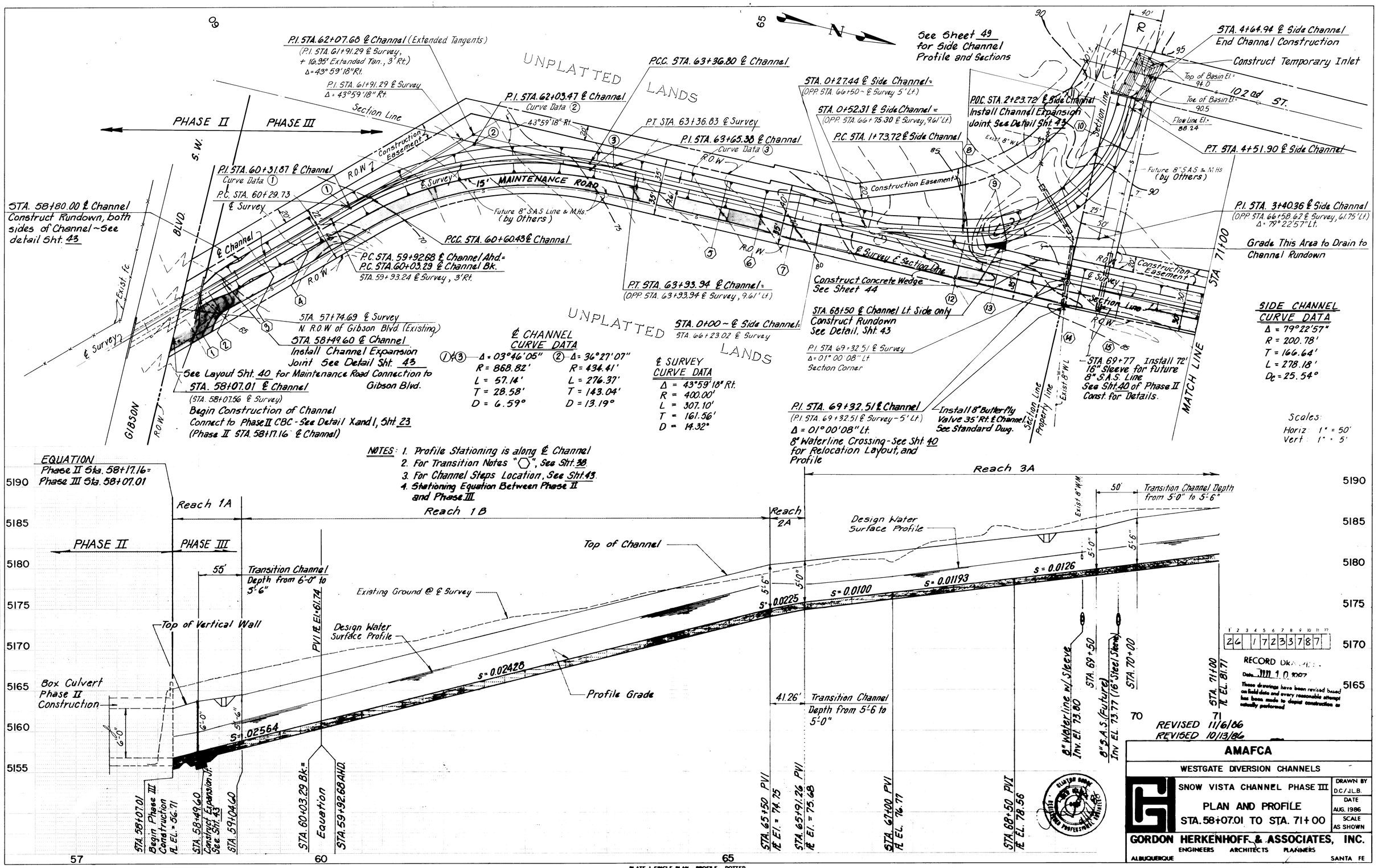

SHEET 37 OF 49

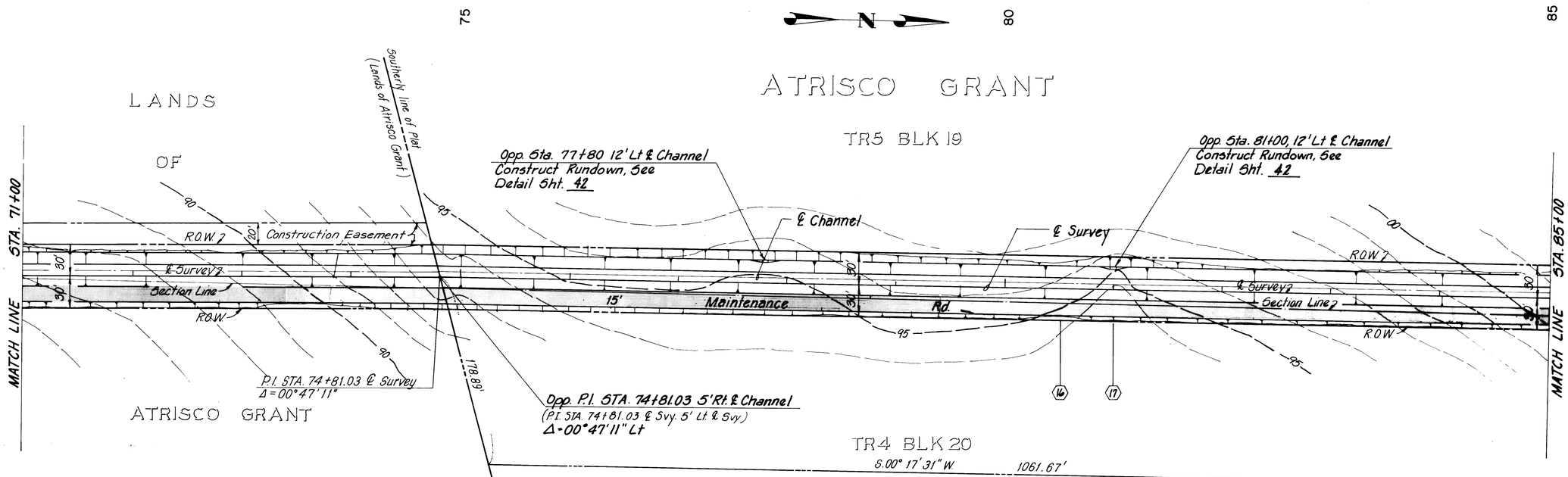

1	STA.58+29.60	CENTERLINE MAIN CHANNEL BEGIN TRANSITION FROM 3'-0" VERTICAL WALL TO 0'-0". SEE TYPICAL DETAIL SHEET 41.
2	STA.58+49.60	CENTERLINE MAIN CHANNEL END VERTICAL WALL TRANSITION AND BEGIN TRANSITION FROM 1:5:1 SIDE SLOPE TO 2:1 SIDE SLOPE (TRAPEZOIDAL CHANNEL).
3	STA.59+04.60	CENTERLINE MAIN CHANNEL END SIDE SLOPE TRANSITION AND BEGIN TRANSITION FROM HORIZ. BOTTOM TRAPEZOIDAL TO 6" TRANSVERSE SLOPED BOTTOM. SEE TYPICAL SECTION SHEET 41.
4	STA.59+54.60	CENTERLINE MAIN CHANNEL END OF BOTT. SLOPED TRANSITION AND BEGIN TRAPEZOIDAL CHANNEL. SEE TYPICAL SECTION SHEET 41.
5	STA. 65+00.00	CENTERLINE MAIN CHANNEL END TRAPEZOIDAL CHANNEL AND BEGIN TRANSITION FROM 6" TRANSVERSE SLOPED BOTTOM TO HORIZ. BOTTOM TRAPEZOIDAL CHANNEL.
6	STA. 65+50	CENTERLINE MAIN CHANNEL END BOTTOM SLOPED TRANSITION, BEGIN TRANSITION FROM 10' WIDE BOTTOM TO 19.22' WIDE BOTTOM TRAPEZOIDAL CHANNEL - CHANNEL DEPTH ALSO DECREASES FROM 5'-6" TO 5'-0". SEE TYPICAL SECTION SHEET 41.
7	STA. 65+91.26	CENTERLINE MAIN CHANNEL END BOTTOM WIDTH AND DEPTH TRANSITION AND BEGIN 19.22' WIDE BOTTOM TRAPEZOIDAL CHANNEL. END AT STA. 66+93.50. SEE TYPICAL SECTIONS SHEET 41.
7A	STA. 66+93.50	CENTERLINE MAIN CHANNEL BEGIN SPLITTER WALL JUNCTION STRUCTURE. SEE SHEET 44.
8	STA. 1+24.66	CENTERLINE SIDE CHANNEL BEGIN TRANSITION FROM HORIZ. BOTTOM TRAPEZOIDAL TO 6" TRANSVERSE SLOPED BOTTOM. SEE TYPICAL SECTIONS SHEET 49.
9	STA. 2+24.66	CENTERLINE SIDE CHANNEL END BOTTOM SLOPED TRANSITION, MAINTAIN TRAPEZOIDAL CHANNEL. SEE TYPICAL SECTIONS SHEET 49.
10	STA. 4+02.86	CENTERLINE SIDE CHANNEL BEGIN TRANSITION FROM 6" TRANSVERSE SLOPED BOTTOM TO HORIZ. BOTTOM TRAPEZOIDAL CHANNEL.
11	STA. 4+52.86	CENTERLINE SIDE CHANNEL END BOTTOM SLOPED TRANSITION, MAINTAIN HORIZ. BOTTOM TO STA. 4+64.74.
12	STA. 68+22.38	CENTERLINE MAIN CHANNEL BEGIN TRANSITION FROM 5'-0" DEEP HORIZ. BOTTOM TRAPEZOIDAL CHANNEL TO 6" TRANSVERSE SLOPED BOTTOM. SEE TYPICAL SECTION SHEET 41 & 42.
13	STA. 68+72.38	CENTERLINE MAIN CHANNEL END BOTTOM TRANSITION.
14	STA. 69+50	CENTERLINE MAIN CHANNEL BEGIN TRANSITION FROM 5'-0" DEEP TO 5'-6" DEEP TRAPEZOIDAL CHANNEL. MAINTAIN 6' TRANSVERSE SLOPED BOTTOM. SEE TYPICAL SECTIONS SHEET 42.
15	STA. 70+00	CENTERLINE MAIN CHANNEL MAINTAIN 5'-6" DEEP TRAPEZOIDAL CHANNEL AND 6" TRANSVERSE SLOPED BOTTOM.
16	STA. 80+50	CENTERLINE MAIN CHANNEL END 5'-6" DEEP TRAPEZOIDAL CHANNEL AND BEGIN TRANSITION TO 5'-0" DEEP TRAPEZOIDAL CHANNEL. MAINTAIN 6" TRANSVERSE SLOPED BOTTOM.
17	STA. 81+00	CENTERLINE MAIN CHANNEL END DEPTH TRANSITION AND BEGIN 5'-0" DEEP TRAPEZOIDAL CHANNEL TO STA. 97+30 CENTERLINE MAIN CHANNEL, MAINTAIN 6" TRANSVERSE SLOPED BOTTOM.
18	STA. 97+30	CENTERLINE MAIN CHANNEL END 5'-0" DEEP TRAPEZOIDAL CHANNEL AND BEGIN TRANSITION TO 7'-6" DEEP TRAPEZOIDAL CHANNEL, MAINTAIN 6" TRANSVERSE SLOPED BOTTOM.
19	STA. 97+50	END CHANNEL CONSTRUCTION.

Note: TR4-BLK 20 is AMAFCA Property. This site may be used as a spoil area for excess excavation at the contractors option. If used for excess excavation, the following procedure will be followed:

1. Strip area and stockpile strippings.
2. Stockpile excess excavation outside of the channel R.O.W. limits. No debris will be allowed.
3. Place strippings on outside of spoil stockpile and seed and mulch per section 212 of the specifications.
4. Spoil stockpile will be the property of AMAFCA.
5. No extra payment will be made to the contractor for use of this tract for spoil.

Scales:
Horz: 1" = 50'
Vert: 1" = 5'

NOTE: Profile Stationing is along ℄ Channel

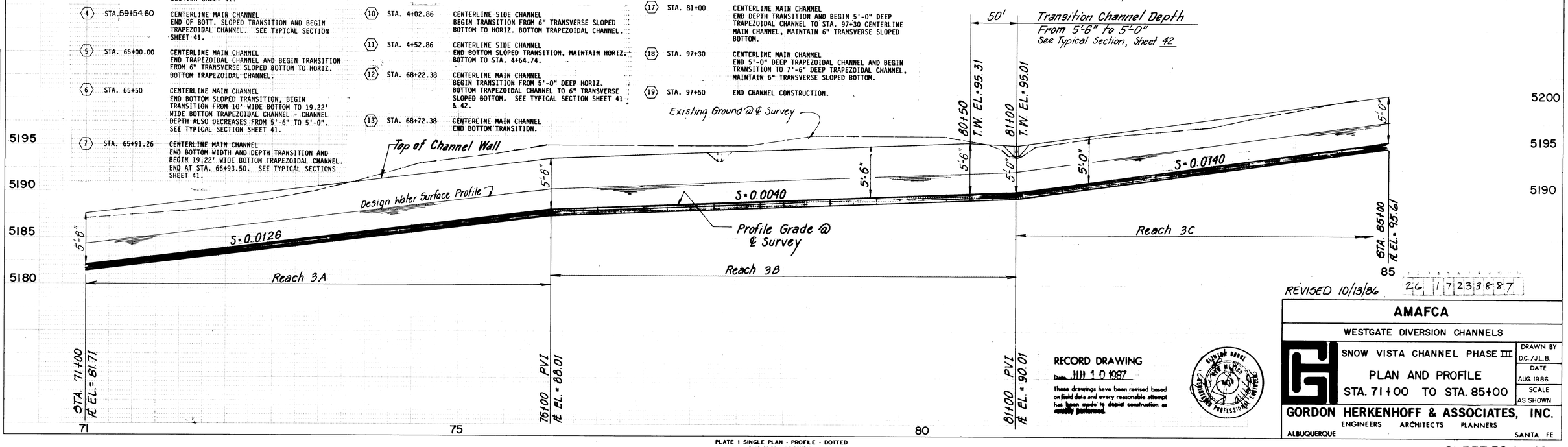

REVISED 10/13/86

RECORD DRAWING
Date JUN 10 1987
These drawings have been revised based on field data and every reasonable attempt has been made to depict construction as actually performed.

AMAFCA

WESTGATE DIVERSION CHANNELS

SNOW VISTA CHANNEL PHASE III

PLAN AND PROFILE
STA. 71+00 TO STA. 85+00

DRAWN BY D.C./J.L.B.
DATE AUG. 1986
SCALE AS SHOWN

GORDON HERKENHOFF & ASSOCIATES, INC.
ENGINEERS ARCHITECTS PLANNERS
ALBUQUERQUE SANTA FE

PLATE 1 SINGLE PLAN - PROFILE - DOTTED
CHARLES BRUNING COMPANY
MADE IN U.S.A.

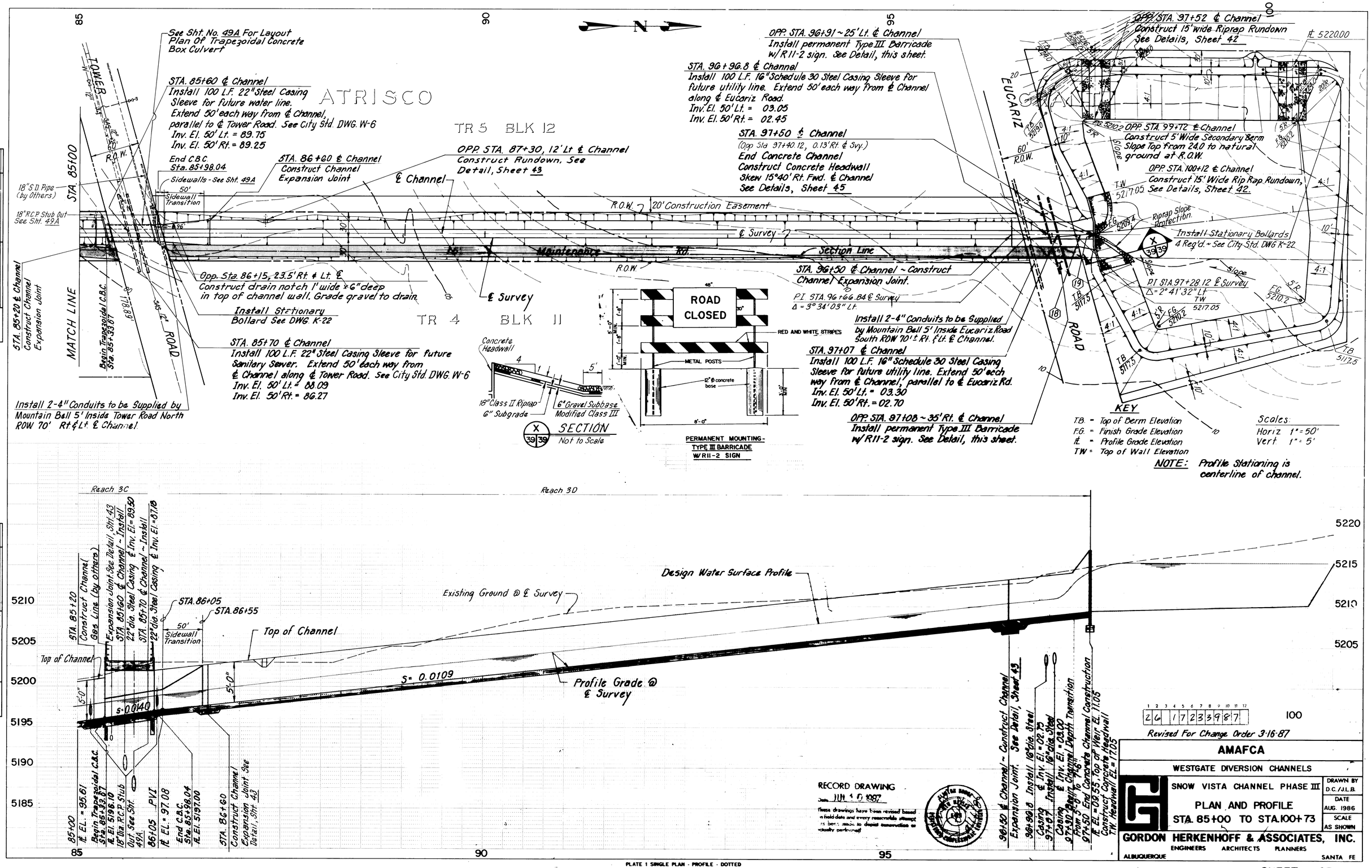

PLAN	BY	DATE
SURVEYED		
PLOTTED		
ALIGNMENT CHECKED		
NOTE BOOK		
NO.		
RE. DT. WAS CHECKED		

PROFILE	BY	DATE
SURVEYED		
PLOTTED		
GRADES CHECKED		
NOTE BOOK		
NO.		
8" M. NOTED		
STRUCTURE NOTATNS CH'KD		

1 2 3 4 5 6 7 8 9 10 11 12
2 6 1 7 2 3 3 9 8 7 100

Revised For Change Order 3-16-87

AMAFCA

WESTGATE DIVERSION CHANNELS

SNOW VISTA CHANNEL PHASE III

PLAN AND PROFILE

STA. 85+00 TO STA. 100+73

DRAWN BY D.C./J.L.B.

DATE AUG. 1986

SCALE AS SHOWN

GORDON HERKENHOFF & ASSOCIATES, INC.

ENGINEERS ARCHITECTS PLANNERS

ALBUQUERQUE SANTA FE

SHEET 39 OF 49

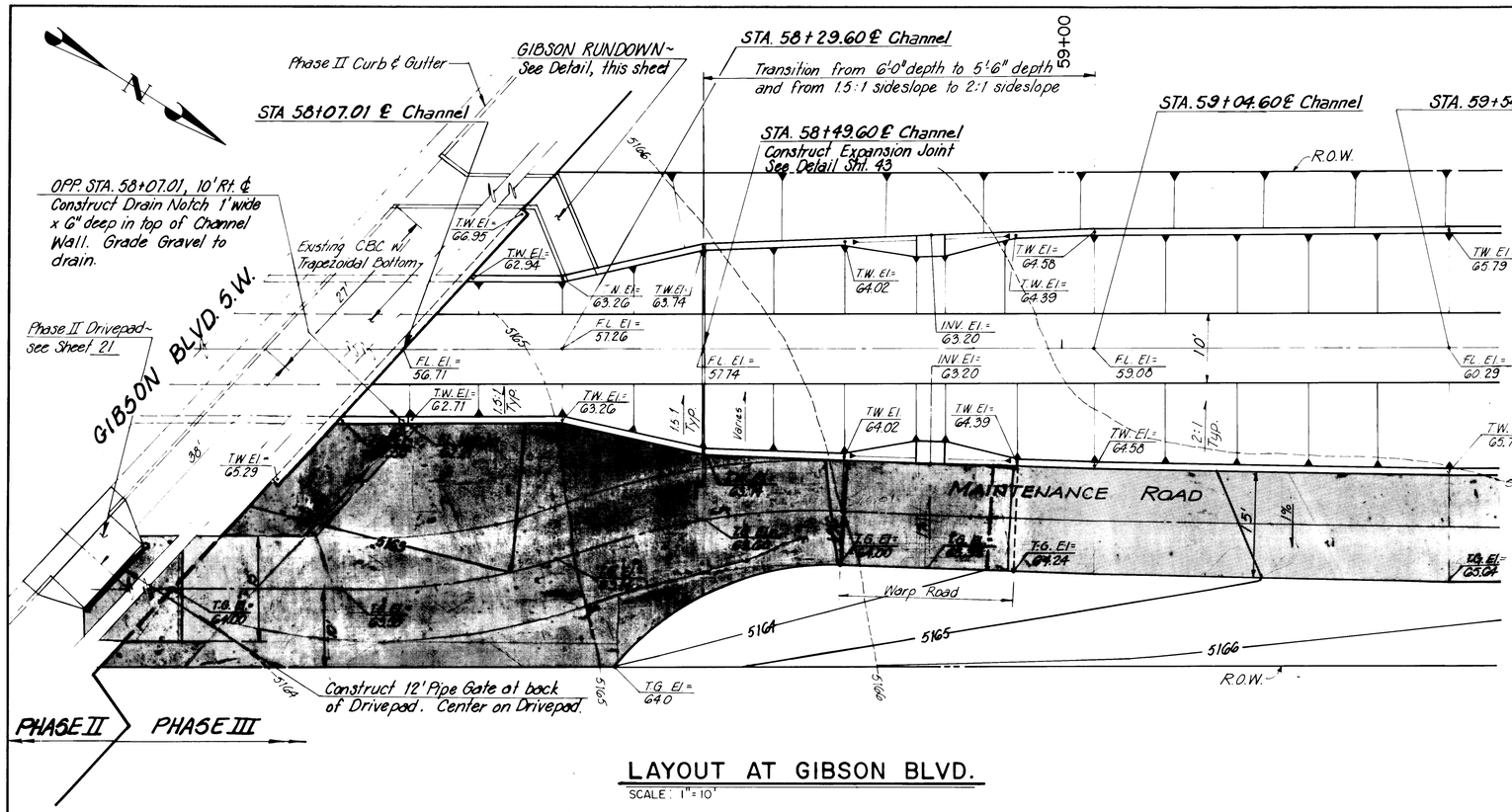

LAYOUT AT GIBSON BLVD.

SCALE: 1" = 10'

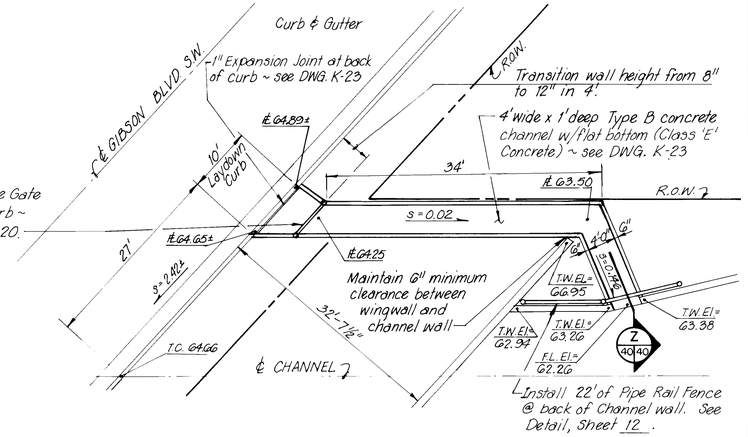

DETAIL ~ GIBSON RUNDOWN

Scale: 1" = 10'

LEGEND

F.L. El — Flow Line Elevation
T.W. El — Top of Wall Elevation
T.S.W. El — Top of Side Walk Elevation
T.G. El. — Top of Gravel Elevation

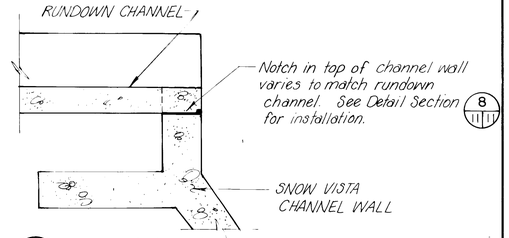

SECTION

Not to Scale

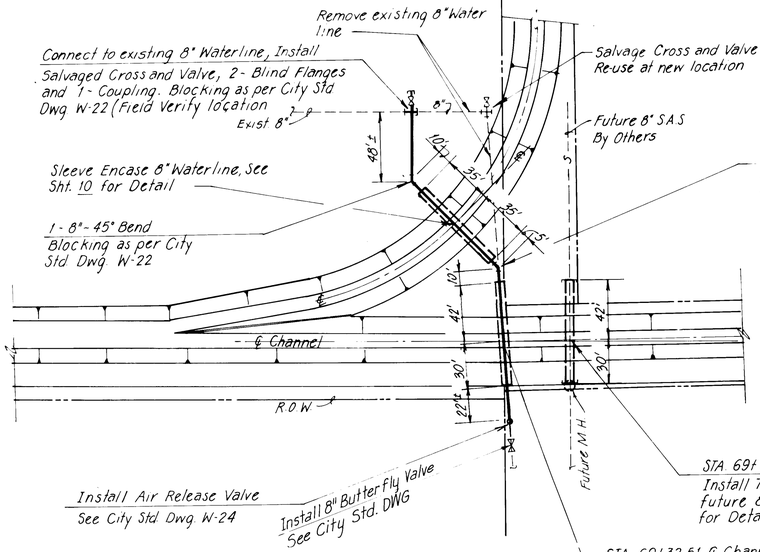

PLAN ~ LAYOUT

Note:
Pipe bends to be rolled as req'd to connect to existing waterline

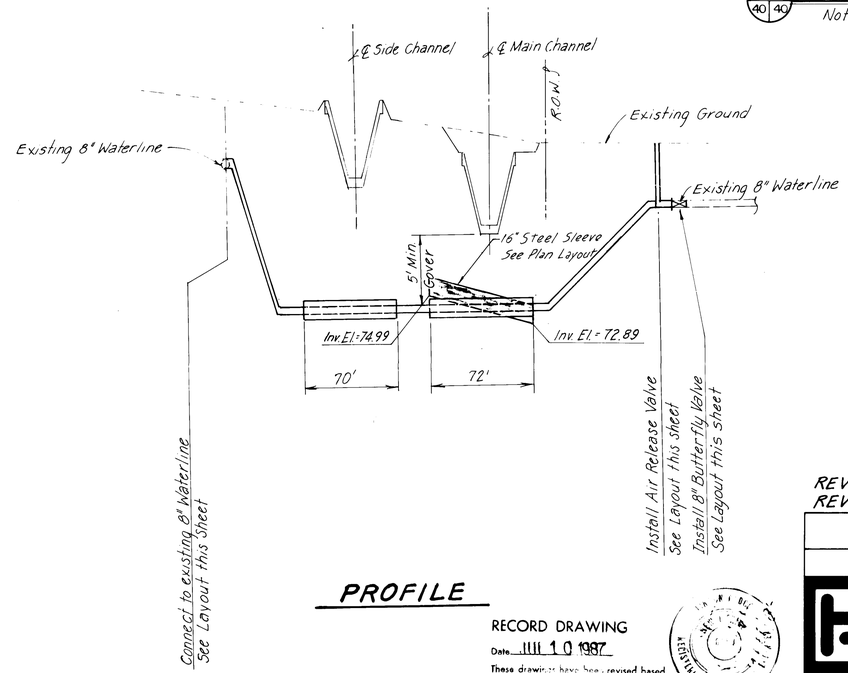

PROFILE

WATERLINE RELOCATION ~ PLAN AND PROFILE

RECORD DRAWING
Date JUL 10 1987
These drawings have been revised based on field data [illegible] reasonable attempt has been made to depict construction as actually performed.

REVISED 11/6/86
REVISED 10/13/86 26 17234087

AMAFCA	
WESTGATE DIVERSION CHANNELS	
SNOW VISTA CHANNEL PHASE III	DRAWN BY D.S.
LAYOUT AT GIBSON BLVD.	DATE SEPT. 1986
	SCALE AS SHOWN
GORDON HERKENHOFF & ASSOCIATES, INC. ENGINEERS ARCHITECTS PLANNERS	
ALBUQUERQUE	SANTA FE

BRUNING 34326

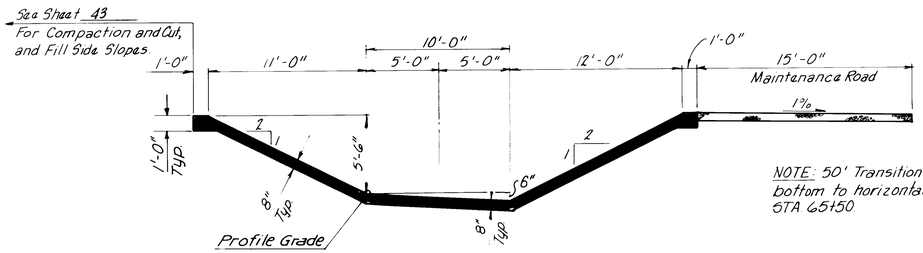

NOTE: 50' Transition from 6" transverse sloped bottom to horizontal bottom STA. 65+00 to STA. 65+50

TYPICAL CHANNEL SECTION
MAIN CHANNEL STA. 59+54.60 TO STA. 65+00

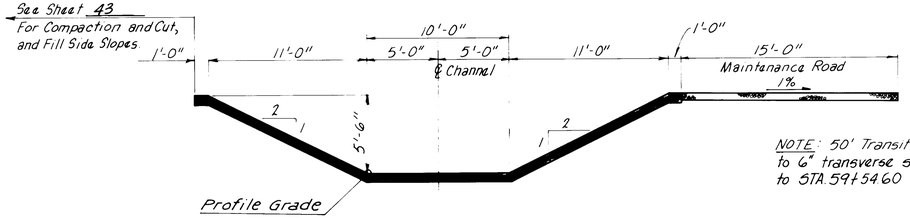

NOTE: 50' Transition from horizontal bottom to 6" transverse sloped bottom STA. 59+04.60 to STA. 59+54.60

TYPICAL CHANNEL SECTION
MAIN CHANNEL STA. 59+04.60

NOTE: Transition Channel Side Slope from 1.5:1 to 2:1 and Channel depth from 6'-0" to 5'-6" from STA. 58+49.60 to STA. 59+04.60

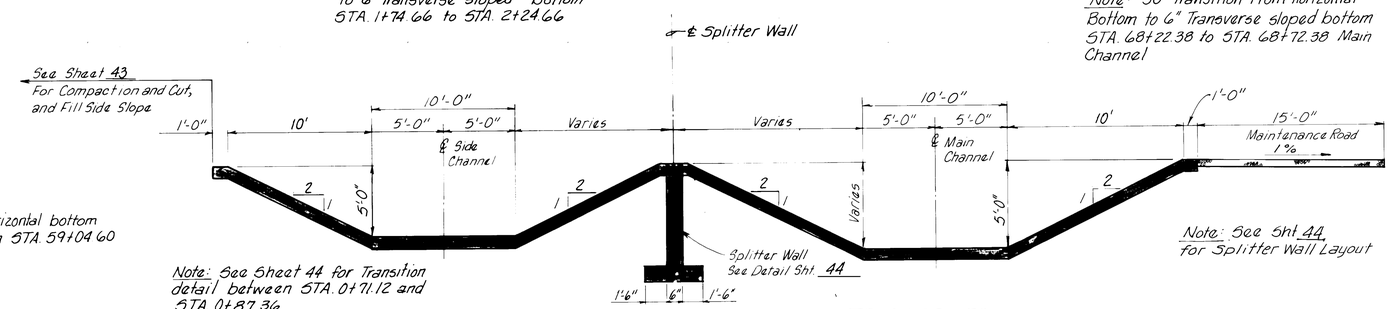

STA. 0+71.12 TO STA. 1+97.50 SIDE CHANNEL

STA. 66+93.50 STA. 68+22.38 MAIN CHANNEL

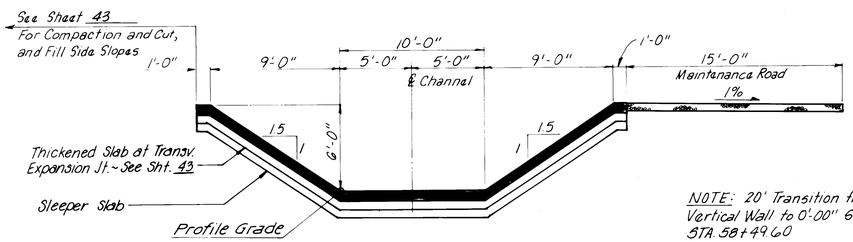

NOTE: 20' Transition from 3'-0" Vertical Wall to 0'-00" STA. 58+29.60 to STA. 58+49.60

TYPICAL CHANNEL SECTION
MAIN CHANNEL STA. 58+49.60

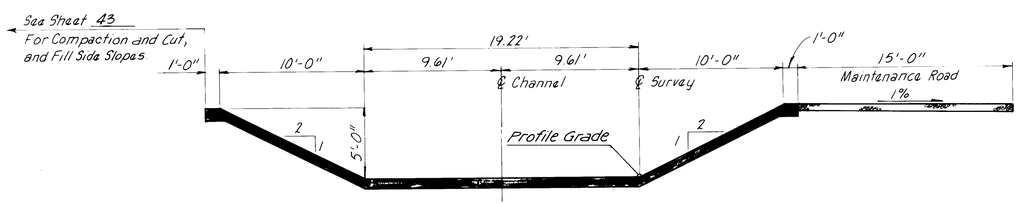

TYPICAL CHANNEL SECTION
MAIN CHANNEL STA. 65+91.26 TO STA. 66+93.50

NOTES:
STA. 65+91.26 to STA. 97+40 Profile Grade @ ℄ Survey
STA. 65+50 to STA. 65+91.26 Profile Grade @ ℄ Channel
STA. 58+07.01 to STA. 65+50 Profile Grade @ 5' Lt. ℄ Channel.

REVISED 11/6/88
REVISED 10/13/86

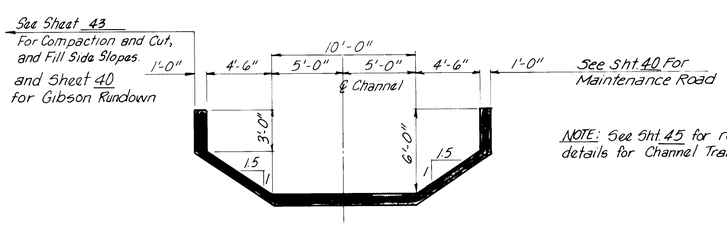

NOTE: See Sht. 45 for reinforcing details for Channel Transition

TYPICAL CHANNEL SECTION
MAIN CHANNEL STA. 58+07.01 TO STA. 58+29.60

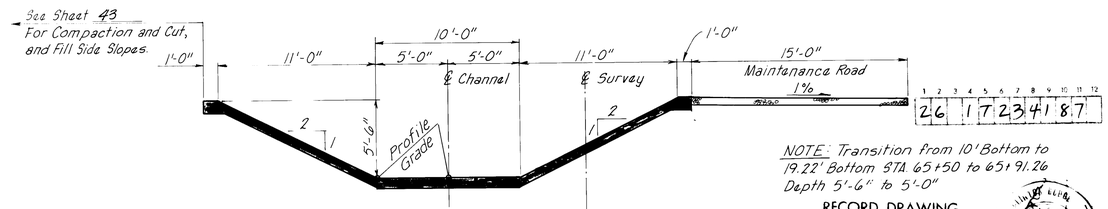

NOTE: Transition from 10' Bottom to 19.22' Bottom STA. 65+50 to 65+91.26 Depth 5'-6" to 5'-0"

RECORD DRAWING
Date JUN 1 0 1997

These drawings have been revised based on field data and every reasonable attempt has been made to depict construction as actually performed

TYPICAL CHANNEL SECTION
MAIN CHANNEL STA. 65+50

AMAFCA	
WESTGATE DIVERSION CHANNELS	
SNOW VISTA CHANNEL PHASE III	DRAWN BY M.R.J.
TYPICAL CHANNEL SECTIONS	DATE SEPT, 1986
	SCALE AS SHOWN
GORDON HERKENHOFF & ASSOCIATES, INC. ENGINEERS ARCHITECTS PLANNERS	
ALBUQUERQUE	SANTA FE

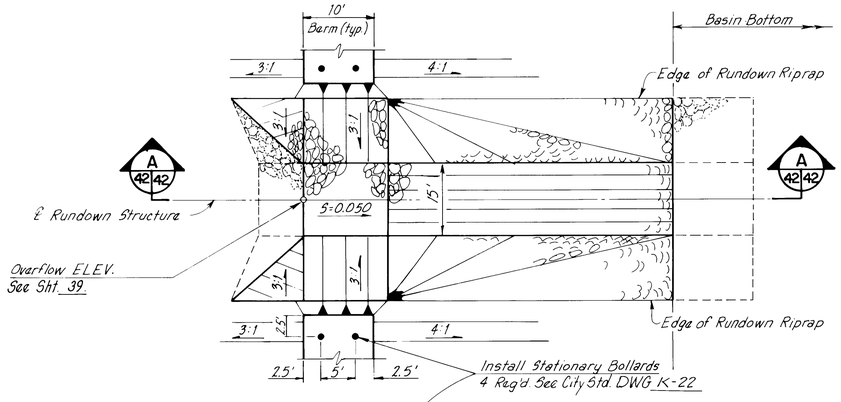

PLAN
Not to Scale

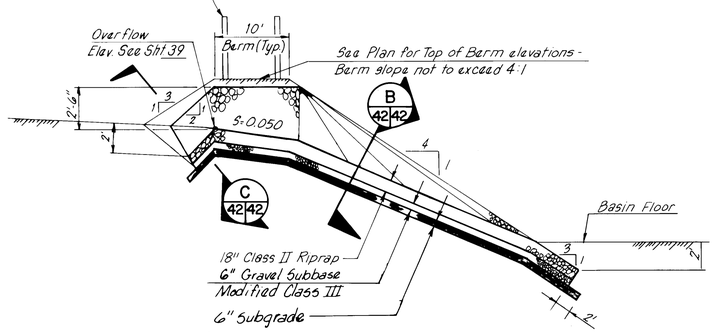

A 42 42 SECTION
Not to Scale

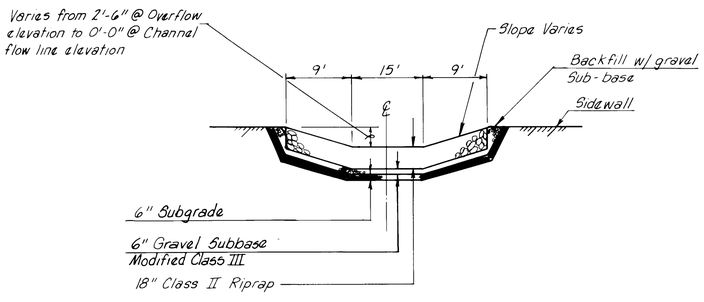

B 42 42 SECTION
Not to Scale

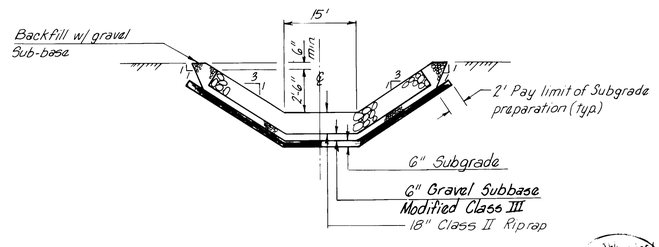

C 42 42 SECTION
Not to Scale

RIPRAP RUNDOWN DETAIL (STA. 97+52 & STA. 100+12)

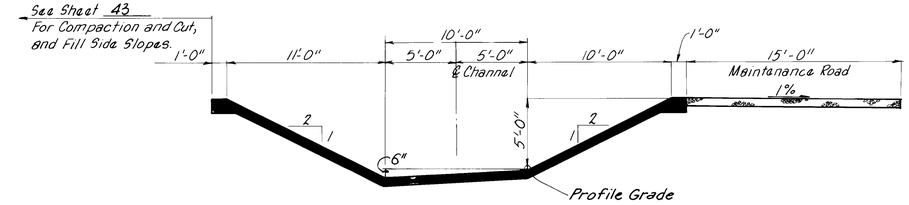

TYPICAL CHANNEL SECTION
MAIN CHANNEL STA. 81+00 TO STA. 85+33.67 &
STA. 85+98.04 TO STA. 97+30

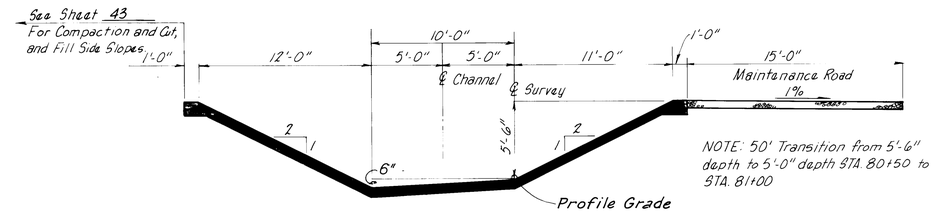

TYPICAL CHANNEL SECTION
MAIN CHANNEL STA. 70+00 TO STA. 80+50

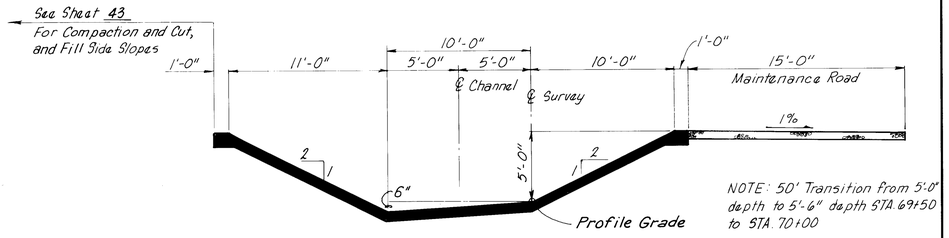

TYPICAL CHANNEL SECTION
MAIN CHANNEL STA. 68+50 TO STA. 69+50

NOTES:
STA. 65+91.26 to STA. 97+40 Profile Grade
@ ℄ Survey.
STA. 65+90 to STA. 65+91.26 Profile Grade
@ ℄ Channel.
STA. 57+83.10 to STA. 65+50 Profile Grade
@ 5' Lt. ℄ Channel.

RECORD DRAWING
Date JUL 10 1987

These drawings have been revised based on field data and every reasonable attempt has been made to depict construction as actually performed

26 1 7 2 3 4 2 8 7

AMAFCA
WESTGATE DIVERSION CHANNELS
SNOW VISTA CHANNEL PHASE III
TYPICAL SECTIONS AND MISCELLANEOUS DETAILS

DRAWN BY	M.J.I.
DATE	SEPT, 1986
SCALE	AS SHOWN

GORDON HERKENHOFF & ASSOCIATES, INC.
ENGINEERS ARCHITECTS PLANNERS
ALBUQUERQUE SANTA FE

BRUNING 34326

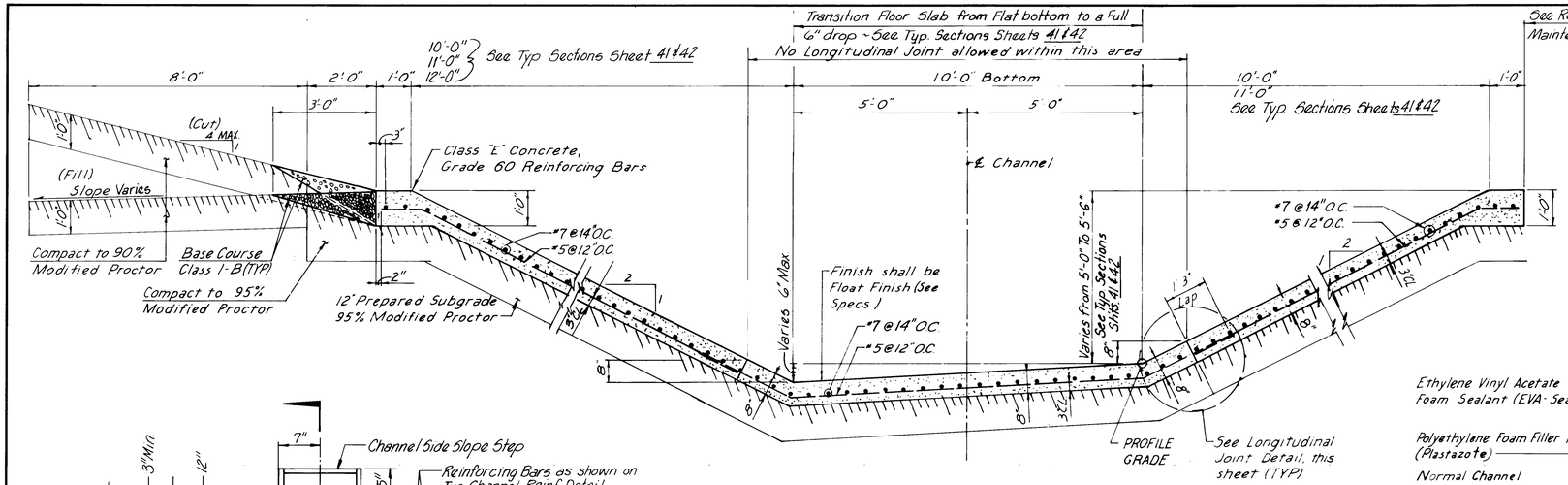

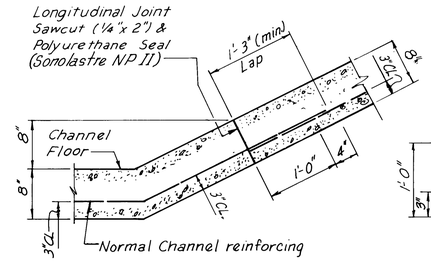

TYPICAL LONGITUDINAL JOINT

SCALE: 1" = 1'-0"

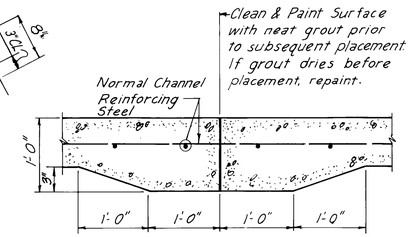

TRANSVERSE CONSTRUCTION JOINT

SCALE: 1" = 1'-0"

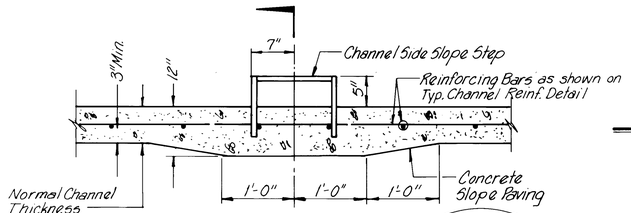

TYPICAL CHANNEL REINFORCING

NOT TO SCALE

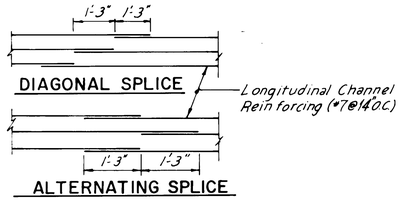

TYPICAL LONGITUDINAL SPLICE

NOTE: Longitudinal channel reinforcing shall have Alternating Splice or Diagonal Splice (Not required for transverse splice.)

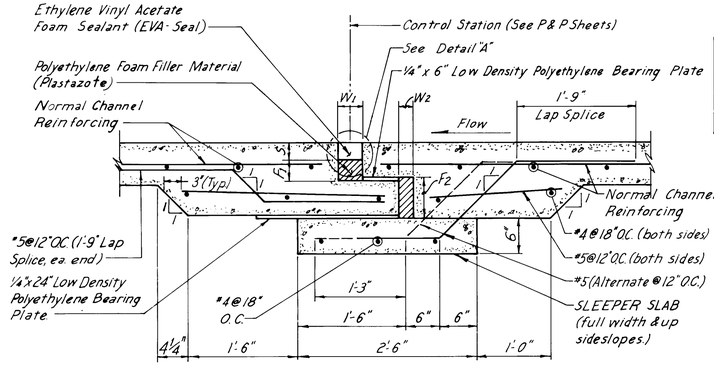

TYPICAL TRANSVERSE EXPANSION JOINT

NOT TO SCALE

EXPANSION JOINT FILLERS & SEALANT DIMENSIONS

CONTROL STATION	W1	W2	S	F1	F2
58+49.60	4"	3"	3 1/2"	2 3/4"	6"
96+50	4"	3"	3 1/2"	2 3/4"	6"
2+23.72 ℄ Side Channel	4"	3"	3 1/2"	2 3/4"	6"

EXPANSION JOINT CONSTRUCTION NOTES

1. Compact sleeper subgrade to 95% per ASTM D 1557.
2. Pour sleeper with Z-bar reinforcement extending above slab. Steel trowel bearing plate surface only.
3. Compact subgrade and form downstream portion of joint. Construction joints may be installed a min. of 5 feet upstream and downstream of joint centerline. Place lower bearing plate and downstream reinforcing and make downstream pour. Steel trowel upper bearing plate surface.
4. Compact subgrade and form upstream portion of joint. Place reinforcing steel, upper bearing plate, and upper and lower foam filler material. Upper bearing plate must be parallel to lower bearing plate. Do not anchor foam filler material with nails or bonding agent, but keep flush withpoured downstream section. Block out foam sealant notch, clean exposed sleeper surface and make upstream pour.
5. When upstream and downstream concrete has reached a min. of 80% design srength or after a minimum of seven days has elapsed since concrete was poured, remove sealant notch form, sand blast vertical surfaces and clean all debris from notch. Apply epoxy bonder to both vertical concrete faces and to both sides of foam sealant material. Immediately compress foam sealant into notch. Remove bonder from top surface of sealant material, but do not clean bonder bead along edges.
6. If sealant material extends from 0" to 1/8" above channel flowline, apply ultraviolet paint as specified. If sealant material extends from 1/8" *or more* above channel flowline, power sand material flush with channel flowline under the direction of the Engineer prior to application of ultraviolet paint.

CHANNEL STEP LOCATIONS		SAFETY POSTS REQ'D.
STATION	LOCATION	
58+55	Rt & Lt	Yes
65+40	Rt & Lt.	No
75+00	Rt & Lt.	No
86+30	Rt & Lt.	Yes
96+00	Rt & Lt.	NO

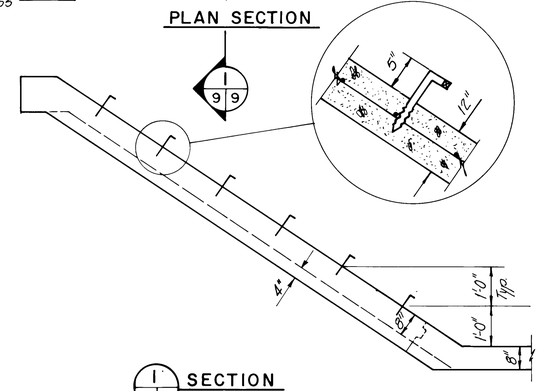

CHANNEL SIDESLOPE STEP DETAIL

NOT TO SCALE

NOTE:
Channel steps shall be 1/2" Grade 60 reinforcing rod encapsulated in a co-polymer polypropylene as manufactured by M.A. Industries, Inc. (Model #P-2-PFS) Steps shall be installed as recommended by manufacturer after channel placement.

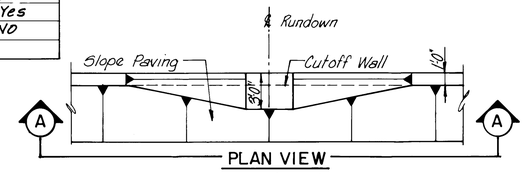

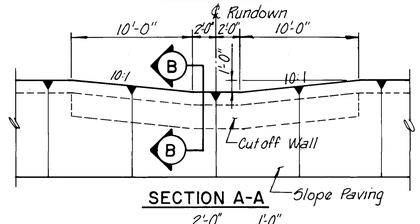

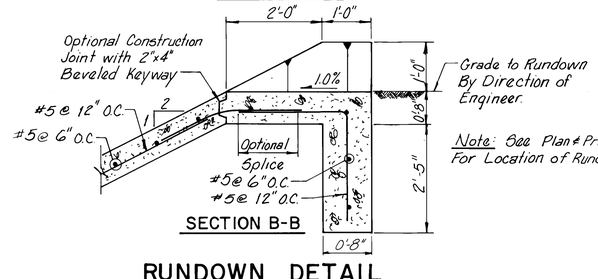

Note: See Plan & Profile For Location of Rundowns.

RUNDOWN DETAIL

NOT TO SCALE

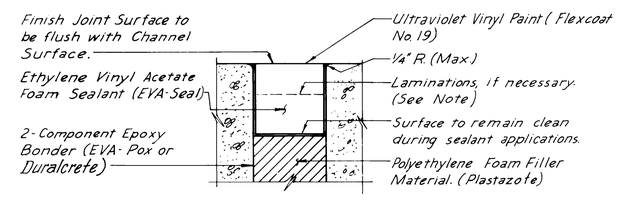

DETAIL "A"

NOT TO SCALE

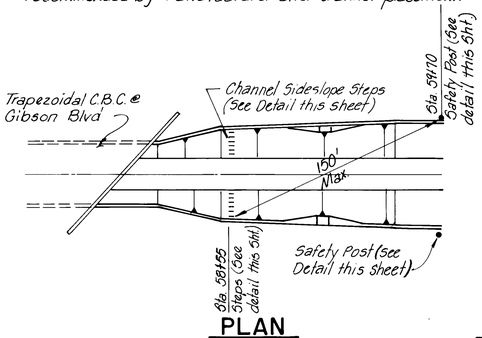

PLAN

NTS

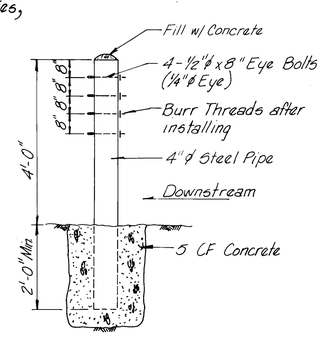

SAFETY POST DETAIL

NOT TO SCALE

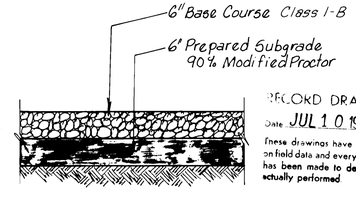

RECORD DRAWING
Date JUL 1 0 1987
These drawings have been revised based on field data and every reasonable attempt has been made to depict construction as actually performed

TYPICAL MAINTENANCE ROAD SECTION

SCALE: 3/4" = 1'

26 17234387

REVISED 11/6/86

REGISTERED PROFESSIONAL ENGINEER

AMAFCA

WESTGATE DIVERSION CHANNELS

SNOW VISTA CHANNEL PHASE III

REINFORCING STEEL AND MISC. DETAILS

DRAWN BY K.H.K.
DATE AUG. 1986
SCALE AS SHOWN

GORDON HERKENHOFF & ASSOCIATES, INC.
ENGINEERS ARCHITECTS PLANNERS
ALBUQUERQUE FARMINGTON SANTA FE

BRUNING 34326

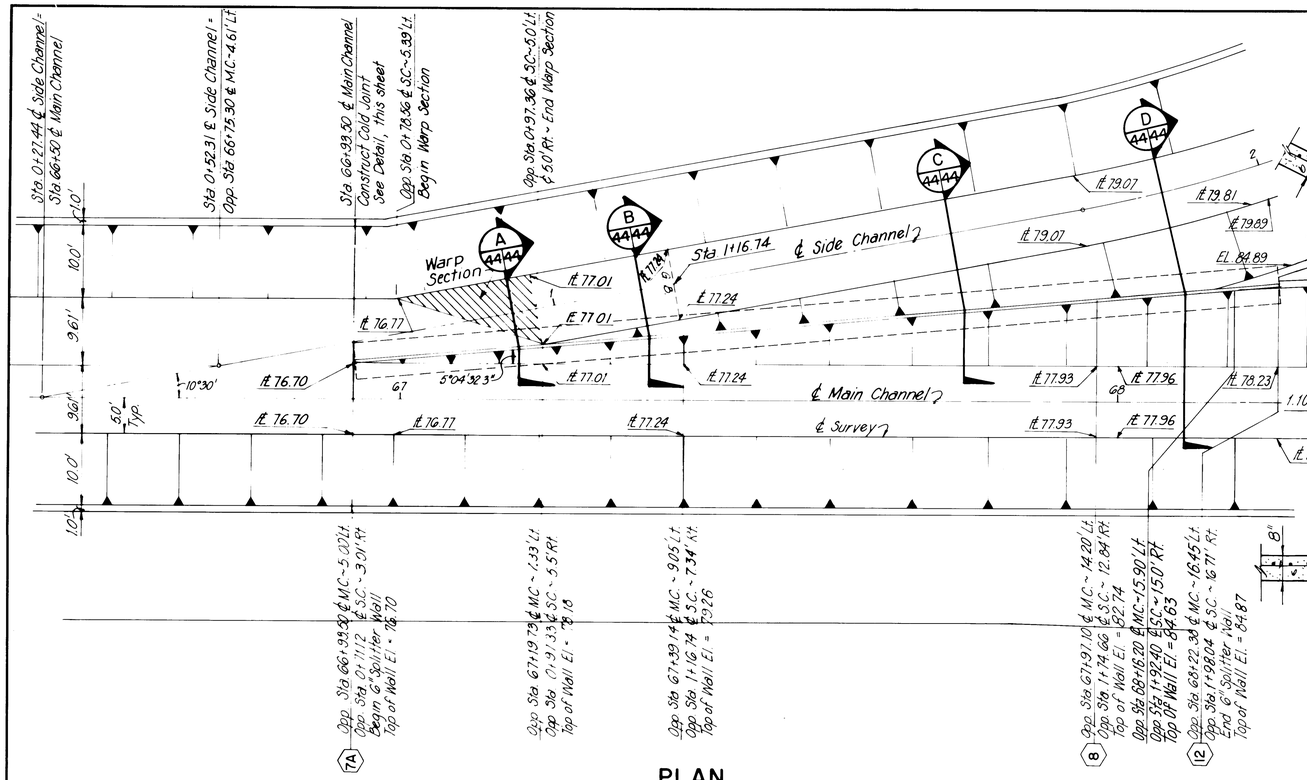

PLAN
SCALE: 1"=10'

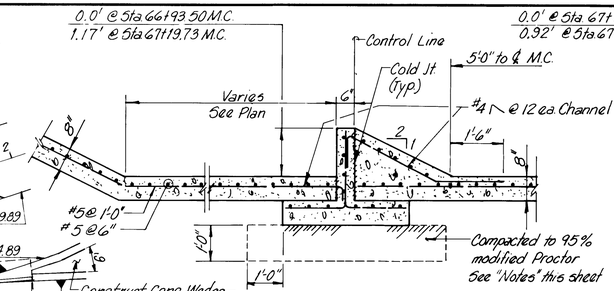

A SECTION
SCALE: 1/2"=1'-0"

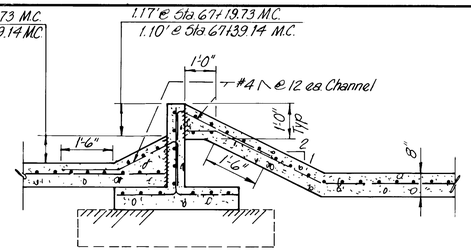

B SECTION
SCALE: 1/2"=1'-0"

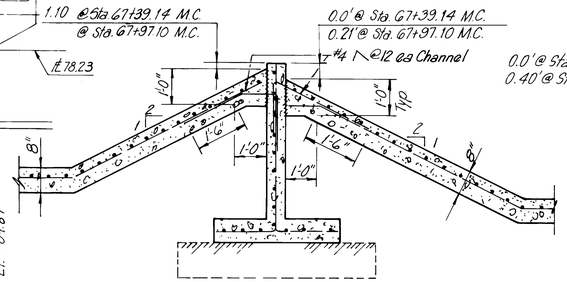

C SECTION
SCALE: 1/2"=1'-0"

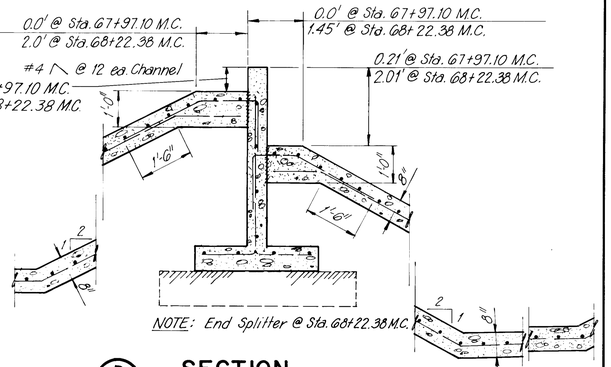

D SECTION
SCALE: 1/2"=1'-0"

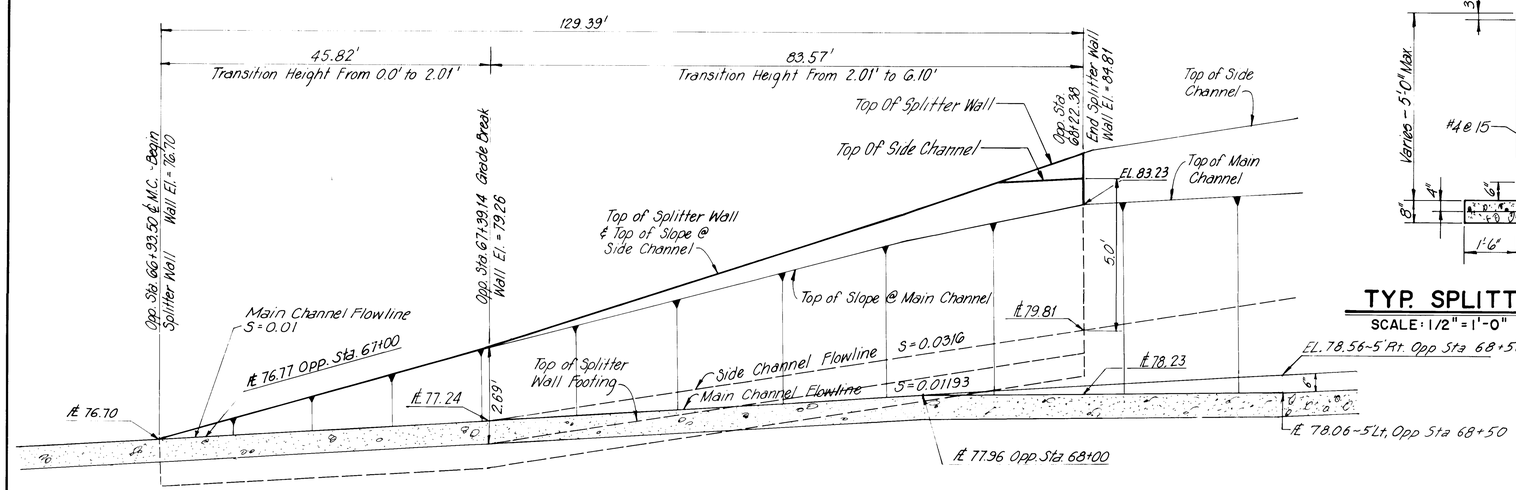

SECTION - ELEVATION
SCALES: HORIZ. 1"=10'
VERT. 1"=2'

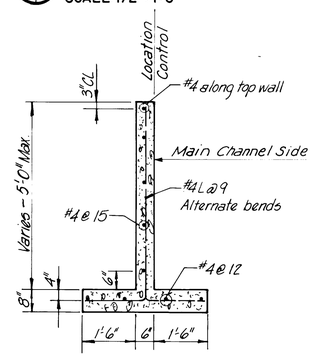

TYP. SPLITTER WALL DETAIL
SCALE: 1/2"=1'-0"

COLD JOINT CONSTRUCTION PROCEDURE

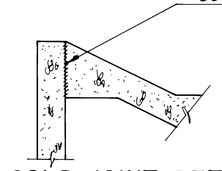

1. Roughen surface of old concrete & remove loose aggregate, laitenance, etc.
2. Immediately before placing new concrete, coat joint surface with neat cement grout which has not obtained initial set.
3. Place fresh concrete before grout has dried.
4. If grout dries before placing concrete, repeat procedure.
5. Reinforcing is continuous through joint.

COLD JOINT DETAIL
NOT TO SCALE

NOTES:
1. Splitter Wall concrete shall be Class 'E', and reinforcing shall be grade 60.
2. Channel Sections and reinforcing are per standard Details Sheet.
3. Compact 12" under splitter wall footing to 95% Modified Proctor. Compact excavated material under channel to 95% Modified Proctor.
4. Splitter Wall shall be paid as structural concrete. Channels shall be paid as Channel lining.
5. Bring backfill lifts up uniformly on both sides of wall.

RECORD DRAWING
DATE JUL 10 1987
These drawings have been revised based on field data and every reasonable attempt has been made to depict construction as actually performed

26 1 1 7 2 3 4 4 8 7

AMAFCA

WESTGATE DIVERSION CHANNELS

SNOW VISTA CHANNEL PHASE III

SPLITTER WALL LAYOUT AND DETAILS

DRAWN BY	J.L.B.
DATE	SEPT, 1986
SCALE	AS SHOWN

GORDON HERKENHOFF & ASSOCIATES, INC.
ENGINEERS ARCHITECTS PLANNERS
ALBUQUERQUE SANTA

SHEET 44 OF

BRUNING 34326

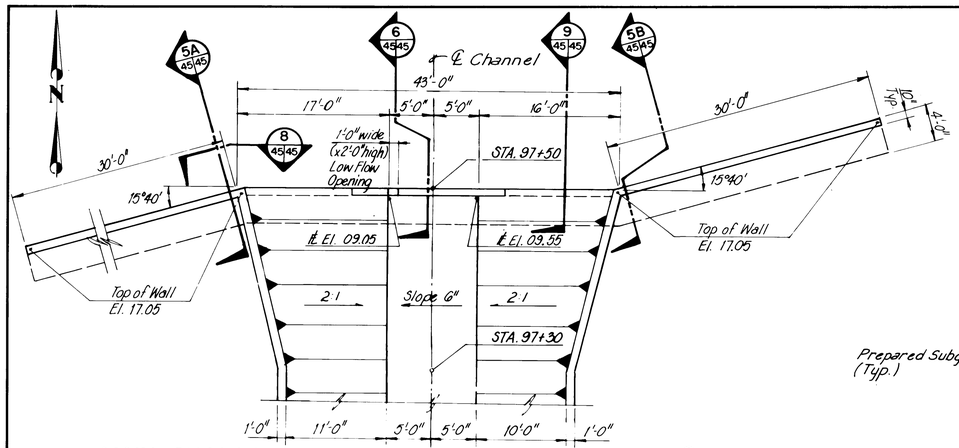

MAIN CHANNEL HEADWALL PLAN, STA. 97+50 ℄ CHANNEL

SCALE: 1/8"=1'-0"

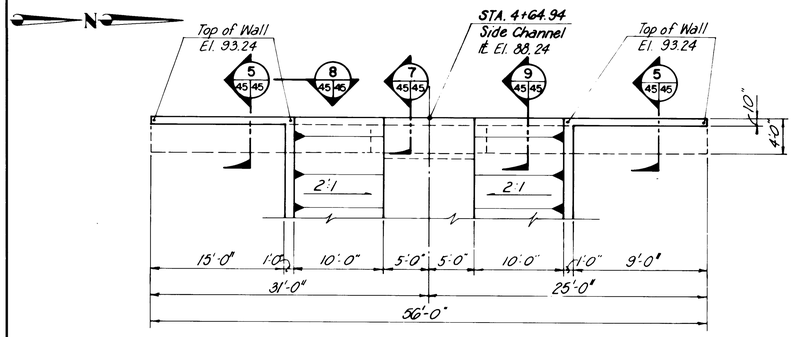

SIDE CHANNEL HEADWALL PLAN, STA. 4+64.94

SCALE: 1/8"=1'-0"

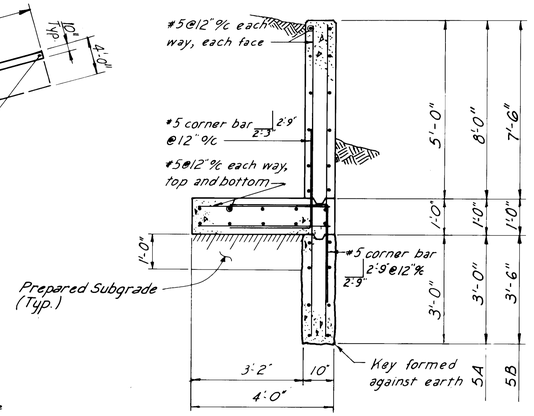

5 45/45 SECTION

SCALE: 1/2"=1'-0"

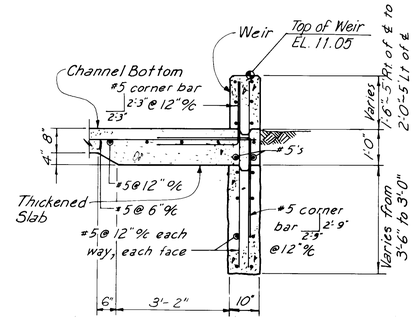

6 45/45 SECTION

SCALE: 1/2"=1'-0"

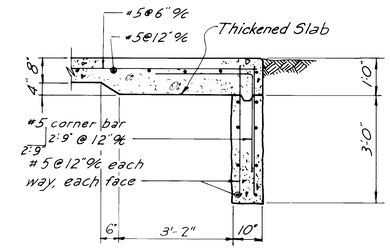

7 45/45 SECTION

SCALE: 1/2"=1'-0"

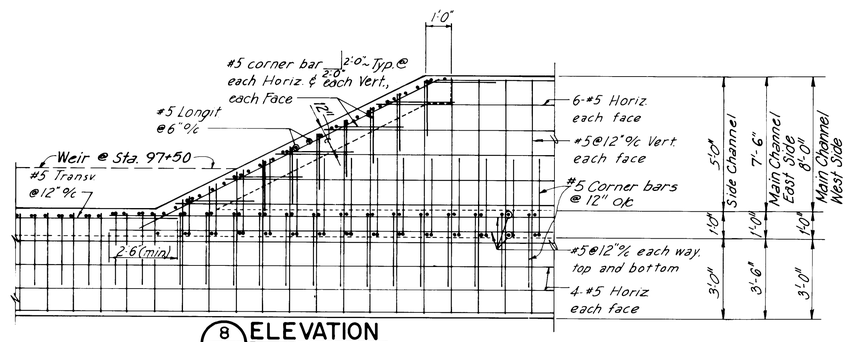

8 45/45 ELEVATION

SCALE: 3/8"=1'-0"

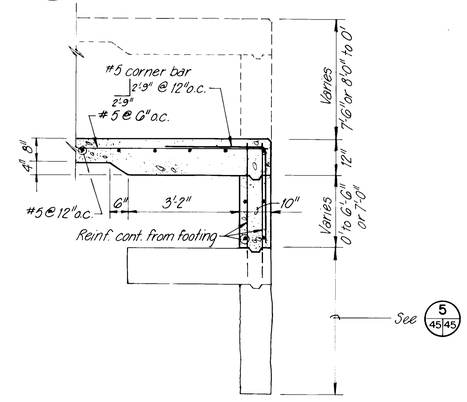

9 45/45 SECTION

SCALE: 1/2"=1'-0"

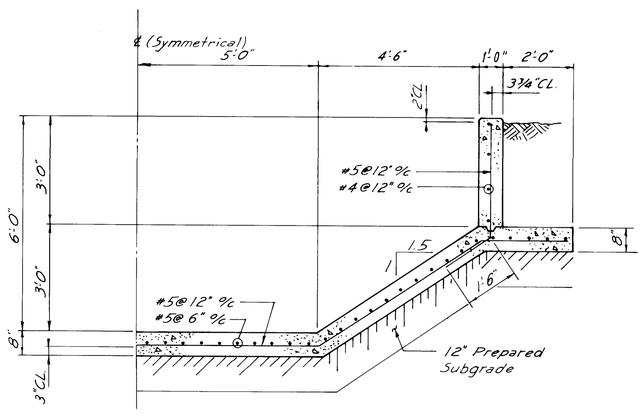

CHANNEL SECTION STA. 58+07.01 TO STA. 58+29.60

SCALE: 1/2"=1'-0"

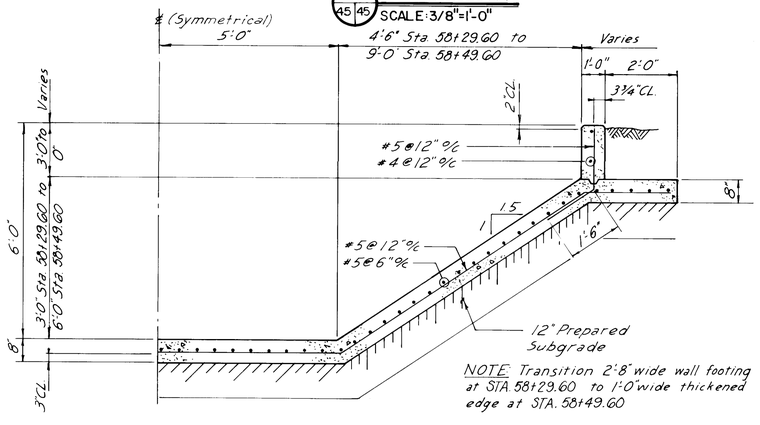

CHANNEL TRANSITION STA. 58+29.60 TO STA. 58+49.60

SCALE: 1/2"=1'-0"

NOTE:
Concrete for footings and headwalls shall be Class 'E'. All other concrete shall be Class 'E'.

RECORD DRAWING
Date JUL 1 0 1987
These drawings have been revised based on field data and every reasonable attempt has been made to depict construction as actually performed.

26 1 7 2 3 4 5 8 7

REVISED 11/6/86

AMAFCA	
WESTGATE DIVERSION CHANNELS	
SNOW VISTA CHANNEL PHASE III STRUCTURAL TRANSITION AND HEADWALL DETAILS	DRAWN BY KHK DATE SEPT. 1986 SCALE AS SHOWN
GORDON HERKENHOFF & ASSOCIATES, INC. ENGINEERS ARCHITECTS PLANNERS ALBUQUERQUE FARMINGTON SANTA FE	

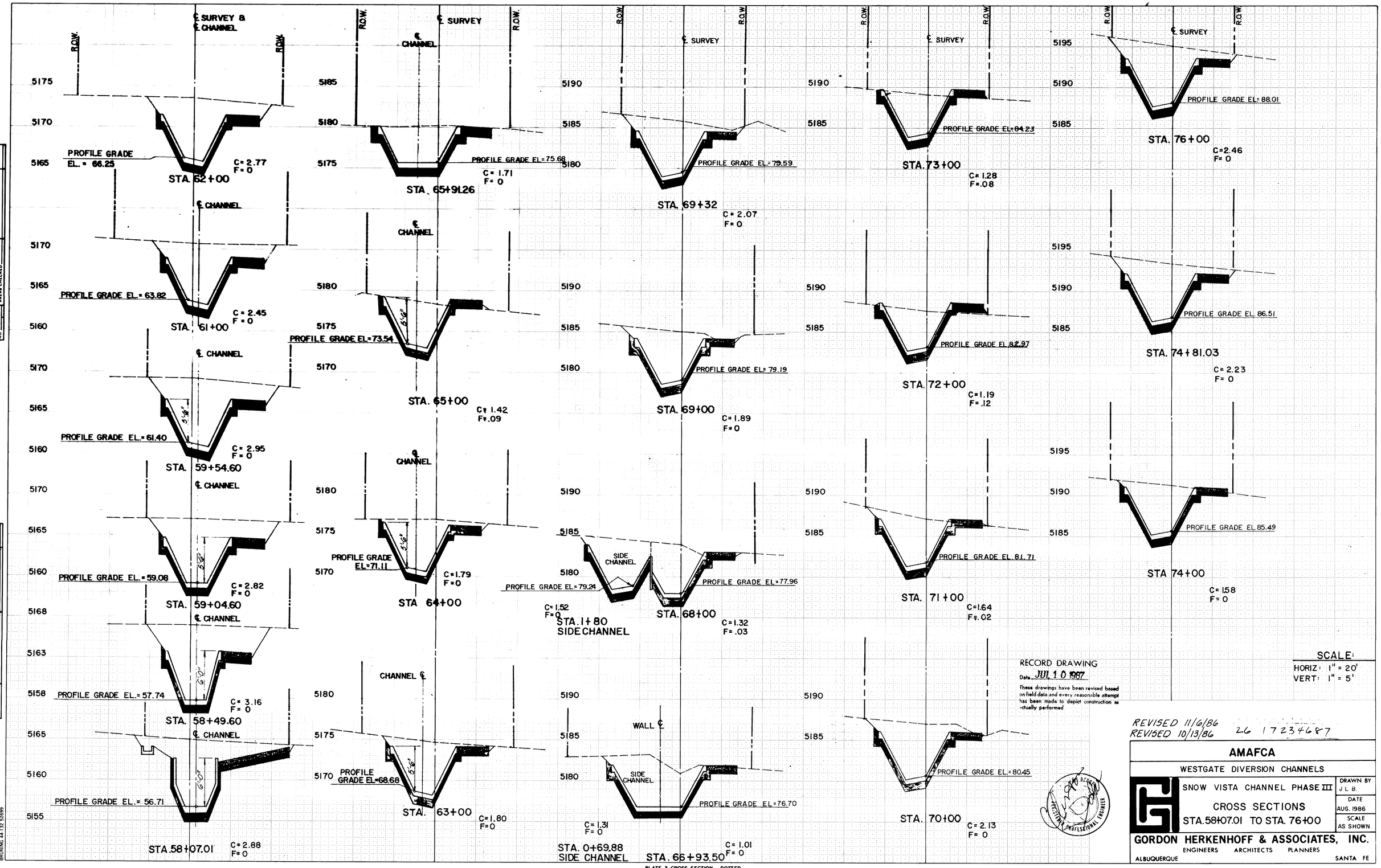

FINAL SURVEY — DATE / BY / SURVEYED / PLOTTED / TEMPLATE / AREAS / AREAS CHECKED / NOTE BOOK / NO.

ORIGINAL SURVEY — DATE / BY / SURVEYED / PLOTTED / TEMPLATE / AREAS / AREAS CHECKED / NOTE BOOK / NO.

RECORD DRAWING
Date JUL 1 0 1987
These drawings have been revised based on field data and every reasonable attempt has been made to depict construction as actually performed.

SCALE:
HORIZ: 1" = 20'
VERT: 1" = 5'

REVISED 11/6/86
REVISED 10/13/86 26 17234687

AMAFCA

WESTGATE DIVERSION CHANNELS

SNOW VISTA CHANNEL PHASE III

CROSS SECTIONS
STA. 58+07.01 TO STA. 76+00

DRAWN BY J.L.B.
DATE AUG. 1986
SCALE AS SHOWN

GORDON HERKENHOFF & ASSOCIATES, INC.
ENGINEERS ARCHITECTS PLANNERS
ALBUQUERQUE SANTA FE

PLATE 3 CROSS SECTION - DOTTED
CHARLES BRUNING COMPANY
MADE IN U.S.A.

BRUNING 44-132 52699

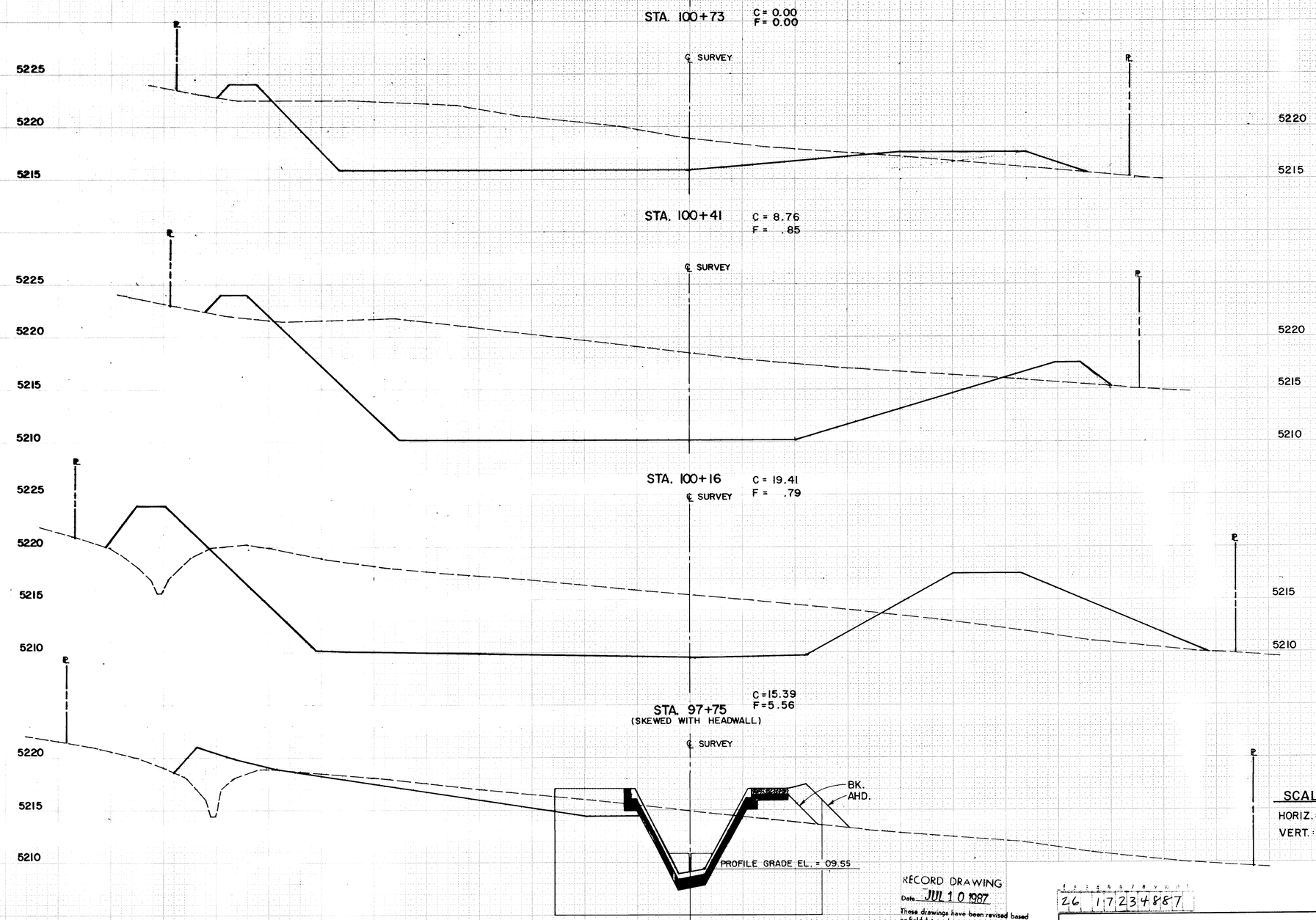

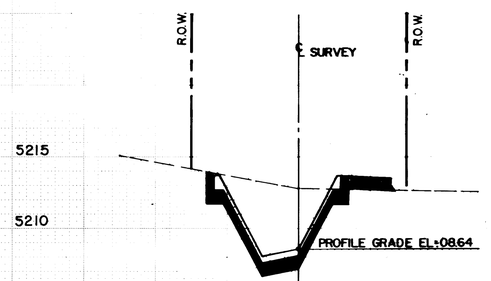

STA. 96+66.84
C=1.15
F=.08

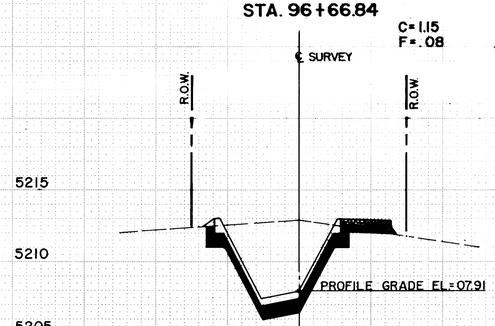

STA. 96+00
C=1.22
F=.07

FINAL SURVEY		BY	DATE
NOTE BOOK	SURVEYED		
NO	PLOTTED		
	TEMPLATE		
	AREAS		
	AREAS CHECKED		

ORIGINAL SURVEY		BY	DATE
NOTE BOOK	SURVEYED		
NO	PLOTTED		
	TEMPLATE		
	AREAS		
	AREAS CHECKED		

SCALE
HORIZ.: 1" = 20'
VERT.: 1" = 5'

RECORD DRAWING
Date JUL 1 0 1987
These drawings have been revised based on field data and every reasonable attempt has been made to depict construction as actually performed

26 1 7 2 3 4 8 8 7

AMAFCA

WESTGATE DIVERSION CHANNELS

SNOW VISTA CHANNEL PHASE III

CROSS SECTIONS
STA. 96+00 TO STA. 100+73

DRAWN BY K.H.K./P.P.
DATE AUG. 1986
SCALE AS SHOWN

GORDON HERKENHOFF & ASSOCIATES, INC.
ENGINEERS ARCHITECTS PLANNERS
ALBUQUERQUE SANTA FE

PLATE 3 CROSS SECTION - DOTTED
CHARLES BRUNING COMPANY
MADE IN U.S.A.

BRUNING 44-132 52699

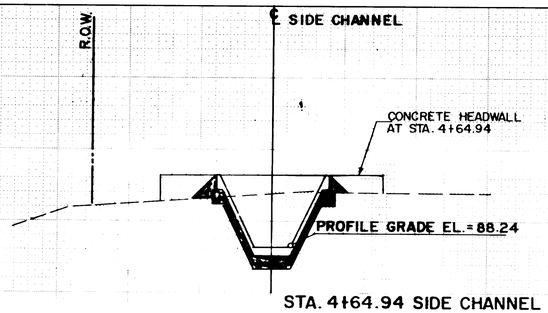

STA. 4+64.94 SIDE CHANNEL

C=.81
F=.43

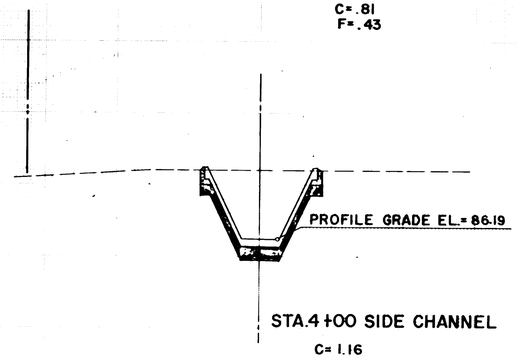

STA.4+00 SIDE CHANNEL

C=1.16
F=.10

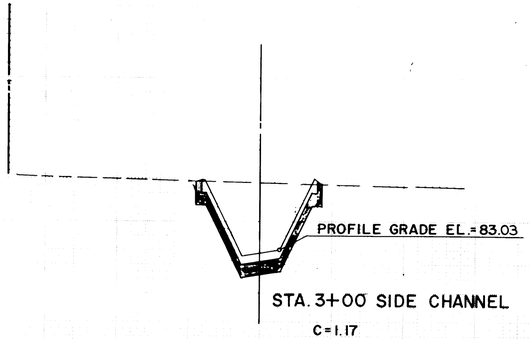

STA. 3+00 SIDE CHANNEL

C=1.17
F=.12

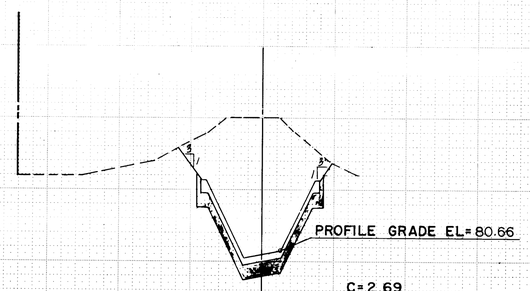

STA. 2+25 SIDE CHANNEL

C=2.69
F=0

See Sheet 43
For Compaction and Cut and Fill Side Slopes, Each Side

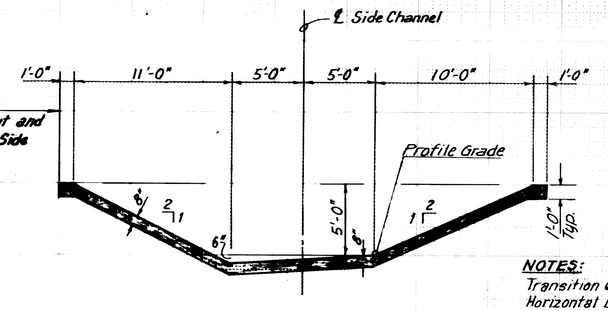

TYPICAL CHANNEL SECTION
SIDE CHANNEL STA.2+23.72 TO STA.4+01.90

NOTES:
Transition 6" Transverse Sloped Bottom to Horizontal Bottom in 50'~ STA. 4+01.90 to STA.4+51.90 Profile Grade is 5' Rt. of ℄ Channel
Transition Horizontal Bottom to 6" Transverse Sloped Bottom in 50'~ Sta. 1+73.72 to Sta. 2+23.72

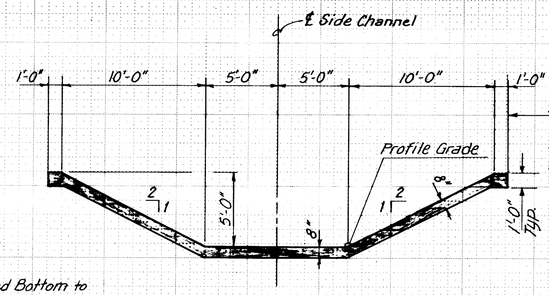

See Sheet 43
For Compaction and Cut and Fill Side Slopes, Each Side

TYPICAL CHANNEL SECTION
SIDE CHANNEL STA.4+51.90 TO STA.4+64.94

Scale: Horiz. 1"=5'
Vert. 1"=5'

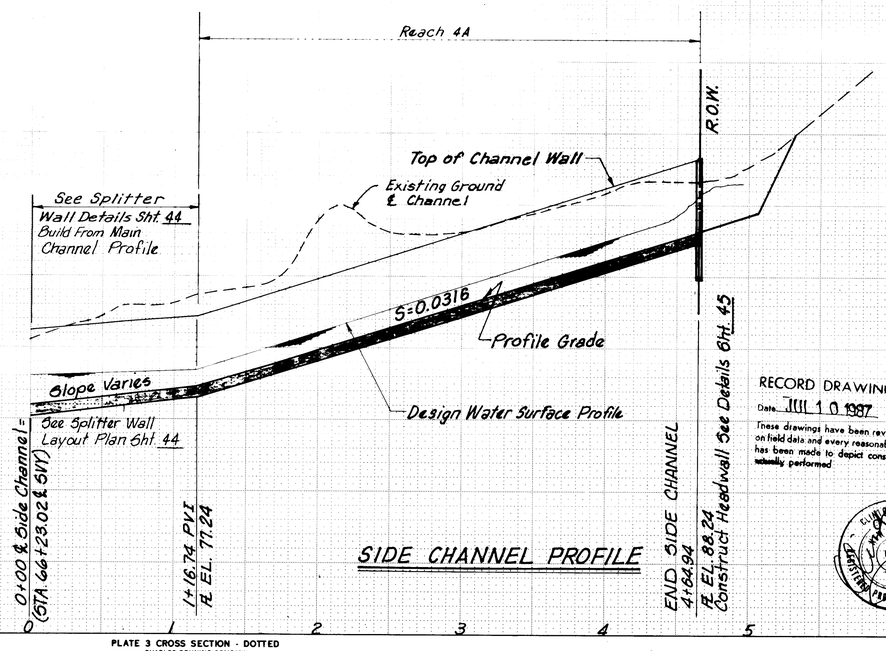

SIDE CHANNEL PROFILE

NOTES:
Profile Stationing is Along ℄ Side Channel
Profile Grades @ 5' Rt. of ℄ Side Channel

SCALE
HORIZ.= 1"=50'
VERT.: 1"= 5'

RECORD DRAWING
Date JUL 10 1987
These drawings have been revised based on field data and every reasonable attempt has been made to depict construction as actually performed

26 17234987

AMAFCA
WESTGATE DIVERSION CHANNELS

SNOW VISTA CHANNEL PHASE III
SIDE CHANNEL PROFILE
AND
CROSS SECTIONS
STA. 2+25 TO STA. 4+64.94

DRAWN BY J.L.B.
DATE AUG. 1986
SCALE AS SHOWN

GORDON HERKENHOFF & ASSOCIATES, INC.
ENGINEERS ARCHITECTS PLANNERS
ALBUQUERQUE SANTA FE

FINAL SURVEY: SURVEYED, PLOTTED, TEMPLATE, AREAS, AREAS CHECKED, NOTE BOOK, NO., BY, DATE

ORIGINAL SURVEY: SURVEYED, PLOTTED, TEMPLATE, AREAS, AREAS CHECKED, NOTE BOOK, NO., BY, DATE

BRUNING 44-132 52699

PLATE 3 CROSS SECTION - DOTTED
CHARLES BRUNING COMPANY
MADE IN U.S.A.

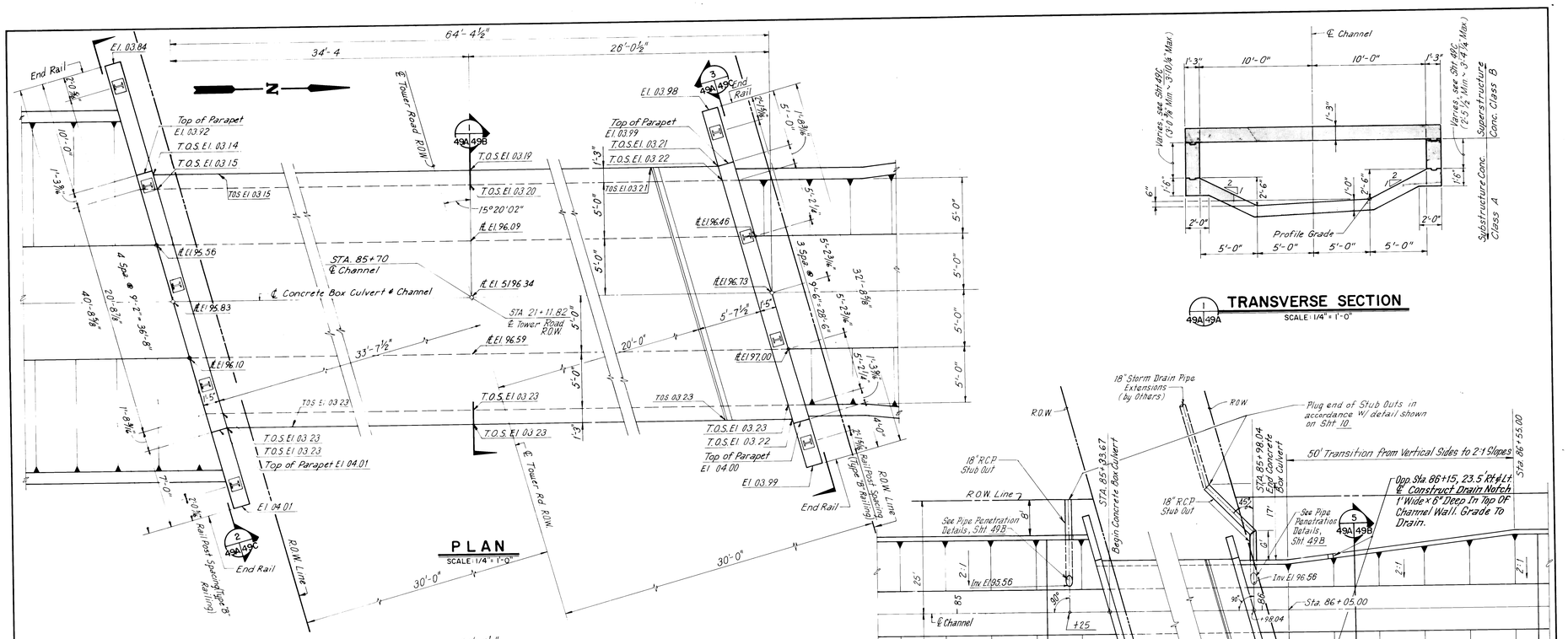

PLAN

SCALE: 1/4" = 1'-0"

TRANSVERSE SECTION

SCALE: 1/4" = 1'-0"

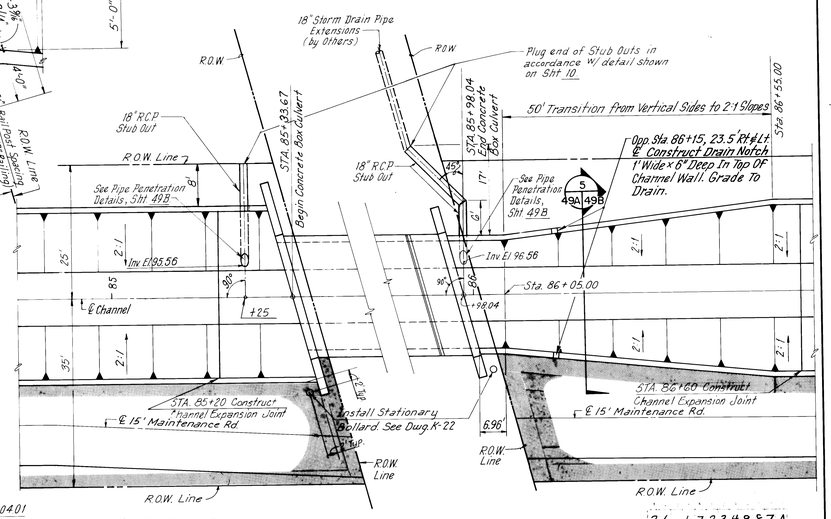

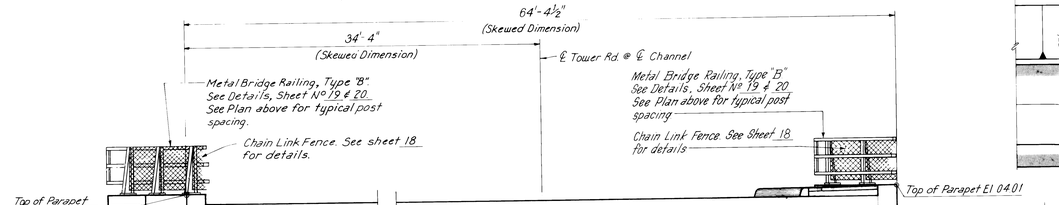

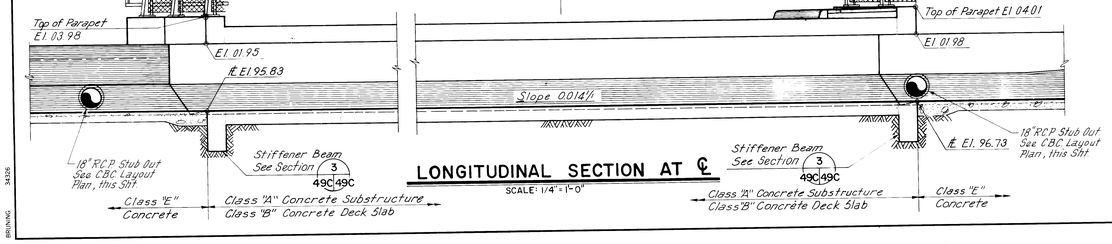

LONGITUDINAL SECTION AT ℄

SCALE: 1/4" = 1'-0"

RECORD DRAWING

Date JUL 1 0 1987

These drawings have been revised based on field data and every reasonable attempt has been made to depict construction as actually performed

C.B.C. LAYOUT PLAN

SCALE: 1" = 10'-0"

CLINTON BURKE NEW MEXICO 6418 REGISTERED PROFESSIONAL ENGINEER

GENERAL NOTES

1. All exposed edges shall have ¾" chamfer unless otherwise shown.
2. Concrete for box culvert substructure shall be Class "A" Concrete for box culvert superstructure shall be Class "B"
3. Finish shall conform to specifications.
4. Contractor to field verify locations and depths of all utility lines prior to construction.

26 17234987A

Revised for Change Order 3-2-87

AMAFCA

WESTGATE DIVERSION CHANNELS

SNOW VISTA CHANNEL PHASE III
TOWER ROAD
CONCRETE BOX CULVERT
PLAN AND SECTION

DRAWN BY	R.R.M.
DATE	JAN. 1987
SCALE	1/4" = 1'-0"

GORDON HERKENHOFF & ASSOCIATES, INC.
ENGINEERS ARCHITECTS PLANNERS
ALBUQUERQUE SANTA FE

34336

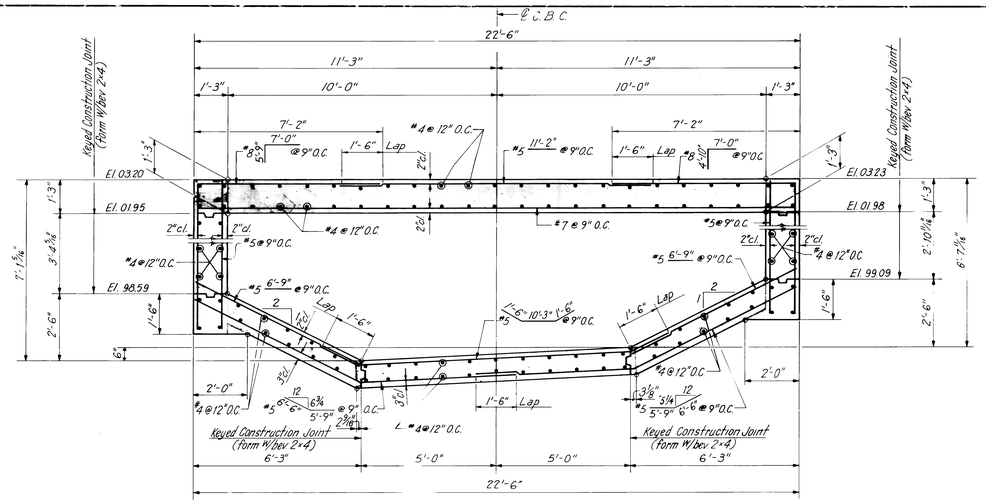

1 / 49A 49B **SECTION @ ℄**
SCALE: 1/2" = 1'-0"

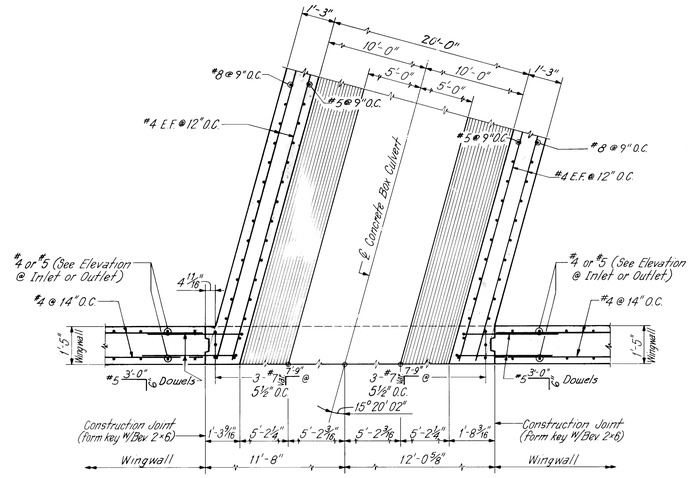

4 / 49C 49B **WINGWALL CONNECTION DETAILS AT INLET & OUTLET**
SCALE: 1/2" = 1'-0"

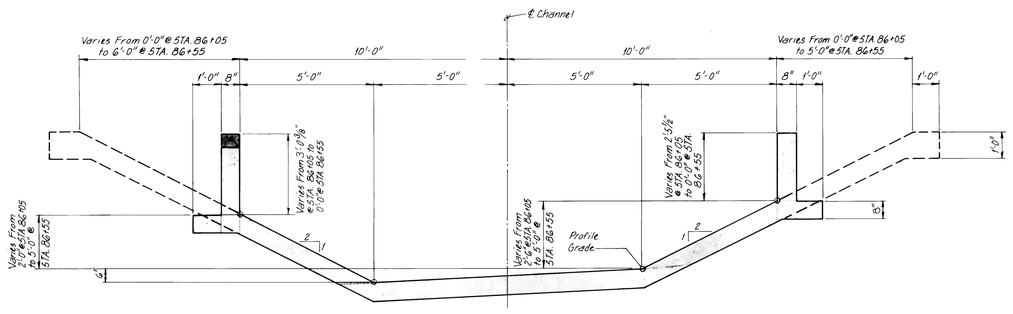

5 / 49A 49B **CHANNEL SECTION STA. 86+05 TO STA. 86+55**
SCALE: 1/2" = 1'-0"

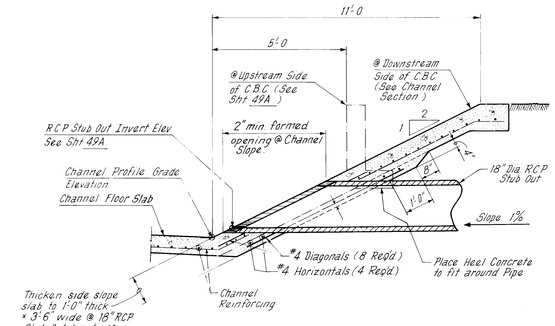

PIPE PENETRATION DETAIL
SCALE: 1/2" = 1'-0"

NOTES:
1. Transition 1'-8" Wide Wall Footing and Vertical Walls to 1'-0" Wide × 1'-0" Thickened Edge as Shown.
2. Reinforcing in Channel Section Similar to Reinforcing Shown on Channel Section - STA. 58+07.01 to STA. 58+29.60 and Channel Transition STA. 58+29.60 to STA. 58+49.60 Sheet No. 45, Snow Vista Channel Phase III

NOTE
Field cut channel reinforcing to fit around beveled pipe.

2L 1 7 2 3 4 9 8 7 8

Revised for Change Order 3-16-87

RECORD DRAWING
Date JUL 10 1987
These drawings have been revised based on field data and every reasonable attempt has been made to depict construction as actually performed

CLINTON BOND NEW MEXICO 6418 REGISTERED PROFESSIONAL ENGINEER

AMAFCA
WESTGATE DIVERSION CHANNELS
SNOW VISTA CHANNEL PHASE III
TOWER ROAD
CONCRETE BOX CULVERT
REINFORCEMENT DETAILS
DRAWN BY V.R.V.
DATE JAN 1987
SCALE AS SHOWN
GORDON HERKENHOFF & ASSOCIATES, INC.
ENGINEERS ARCHITECTS PLANNERS
ALBUQUERQUE SANTA FE

BRUNING 34326

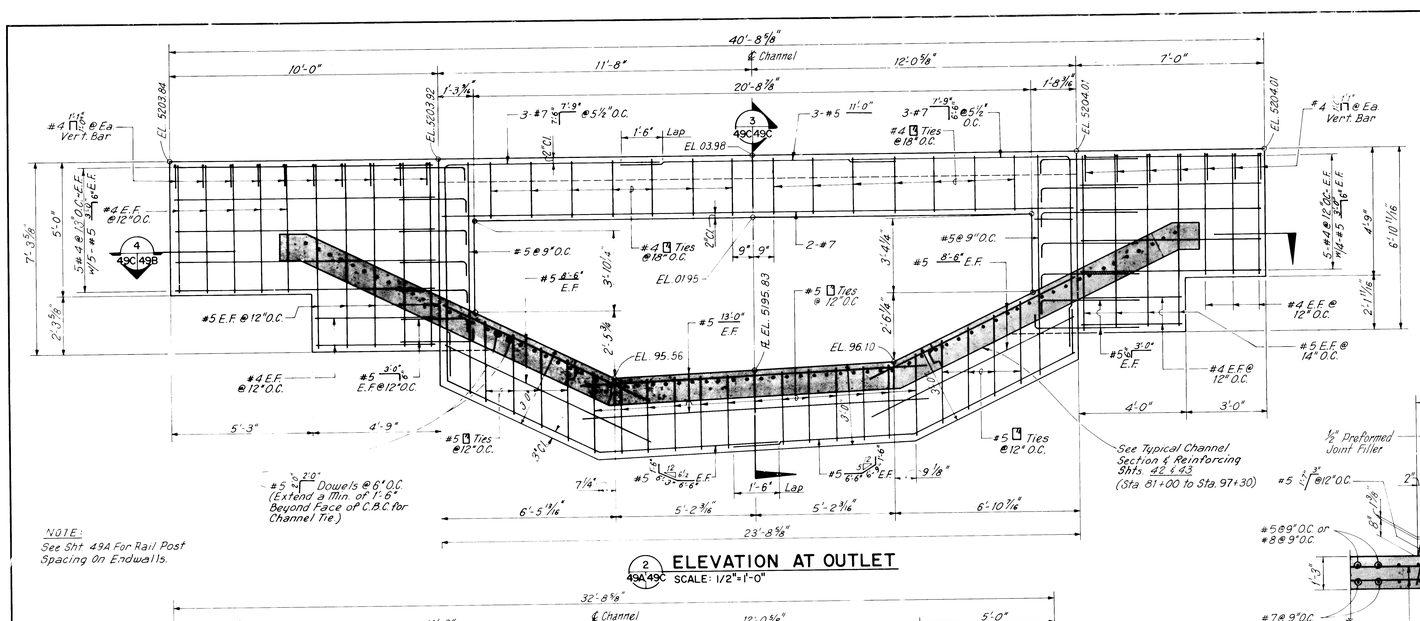

NOTE:
See Sht 49A For Rail Post Spacing On Endwalls.

ELEVATION AT OUTLET

2 / 49A 49C SCALE: 1/2"=1'-0"

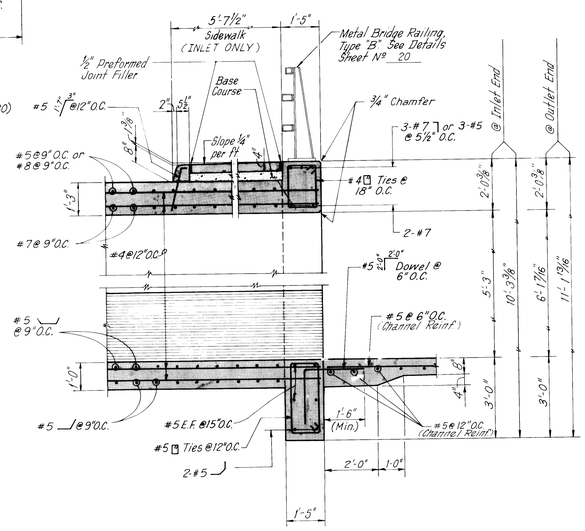

NOTE:
Thicken Sidewalk to Full Depth of 8" (1'-0" Wide) @ Both Ends of Sidewalk (Typical)

SECTION

3 / 49C 49C SCALE: 1/2"=1'-0"

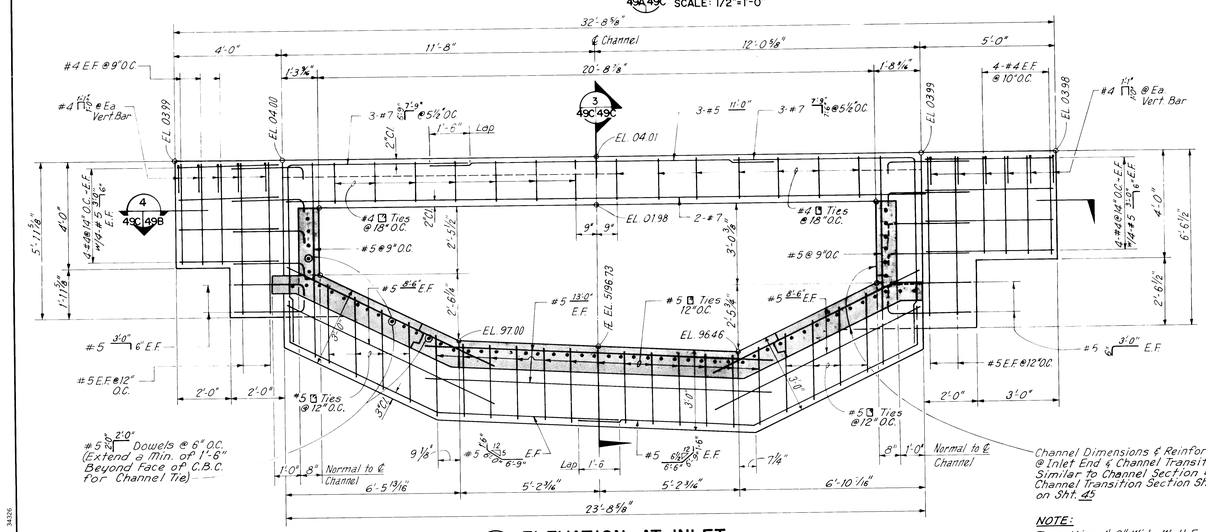

ELEVATION AT INLET

1 / 49A 49C SCALE: 1/2"=1'-0"

Channel Dimensions & Reinforcing @ Inlet End & Channel Transition Similar to Channel Section & Channel Transition Section Shown on Sht. 45

NOTE:
Transition 1'-8" Wide Wall Footing to 1'-0" Wide Thickened Edge from Sta 86+05 to Sta. 86+55.00. See Sht. 49A & 49B

RECORD DRAWING
Date JUL 1 0 1987
These drawings have been revised based on field data and are reasonably correct as-built. Minor changes to depict construction as actually performed

CLINTON BURST NEW MEXICO 5410 REGISTERED PROFESSIONAL ENGINEER

26 1723498-1C
Revised for Change Order 3-16-87

AMAFCA

WESTGATE DIVERSION CHANNELS

SNOW VISTA CHANNEL PHASE III
TOWER ROAD
CONCRETE BOX CULVERT
REINFORCEMENT DETAILS

DRAWN BY	V.R.V. & G.S.
DATE	JAN. 1987
SCALE	AS SHOWN

GORDON HERKENHOFF & ASSOCIATES, INC.
ALBUQUERQUE ENGINEERS ARCHITECTS PLANNERS SANTA FE

SHEET 49 OF 49

BRUNING 34576