CITY OF ALBUQUERQUE
MUNICIPAL DEVELOPMENT DEPARTMENT

PLANS FOR CONSTRUCTION OF

TIJERAS ARROYO CROSSING AT FOUR HILLS ROAD

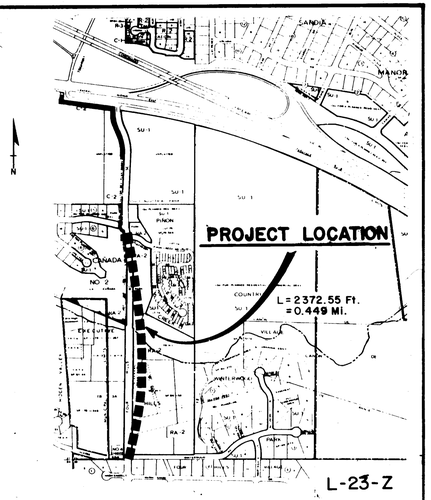

VICINITY MAP

NOTICE TO CONTRACTORS

1. All work detailed on these plans to be performed under contract shall, except as otherwise stated or provided for hereon, be constructed in accordance with the City of Albuquerque Interim Standard Specifications for Public Works Construction 1985.
2. Two (2) working days prior to any excavation, the contractor must contact Line Locating Service, 765-1234 for location of existing utilities.
3. Prior to construction, the contractor shall excavate and verify the horizontal and vertical locations of all obstructions. Should a conflict exist, the contractor shall notify the engineer or surveyor so that the conflict can be resolved with minimum amount of delay.

INDEX TO SHEETS

SHEET NO.	DESCRIPTION
C-1	TITLE SHEET
C-2	LAYOUT MAP AND TYPICAL ROADWAY SECTION
C-3 TO C-8	PLAN AND PROFILE
C-9	CONSTRUCTION PHASING PLAN
C-10	RIGHT OF WAY MAP
C-11 TO C-22	CROSS-SECTIONS
S-1	SUMMARY OF QUANTITIES
S-2	FOUNDATIONS & GRADING PLAN
S-3 THRU S-12	BRIDGE
S-13	REINFORCING BAR SCHEDULE
R1 THRU R10	FOUR HILLS ROAD ALIGNMENT

THE FOLLOWING NOTES ALSO APPLY WHEN CHECKED

- ☐ All utilities and utility service lines shall be installed prior to paving.
- ☐ Backfill compaction shall be according to specified street use.
- ☐ Tack coat requirements shall be determined by the City Engineer.
- ☐ Sidewalks and wheelchair ramps withing the curb returns shall be constructed wherever a new curb return is constructed.
- ☐ If curb is depressed for a drivepad or a handicap ramp, the drivepad or ramp shall be constructed prior to acceptance of the curb and gutter.
- ☒ All storm drainage facilities shall be completed prior to final acceptance.

APPROVAL OF AS BUILT DRAWINGS
CHIEF CONSTRUCTION ENGINEER
DATE 2-24-89

26 1826 0189

REV.	SHEETS	CITY ENGINEER	DATE	USER DEPT.	DATE	USER DEPT.	DATE

APPROVAL OF REVISIONS

JUL 11, 1985

BOVAY ENGINEERS, INC.
ALBUQUERQUE
HOUSTON • SPOKANE • AUSTIN • BATON ROUGE

A/E 83-32 PROJECT 1826

APPROVED FOR CONSTRUCTION
7/23/86

SHEET 1 OF 39

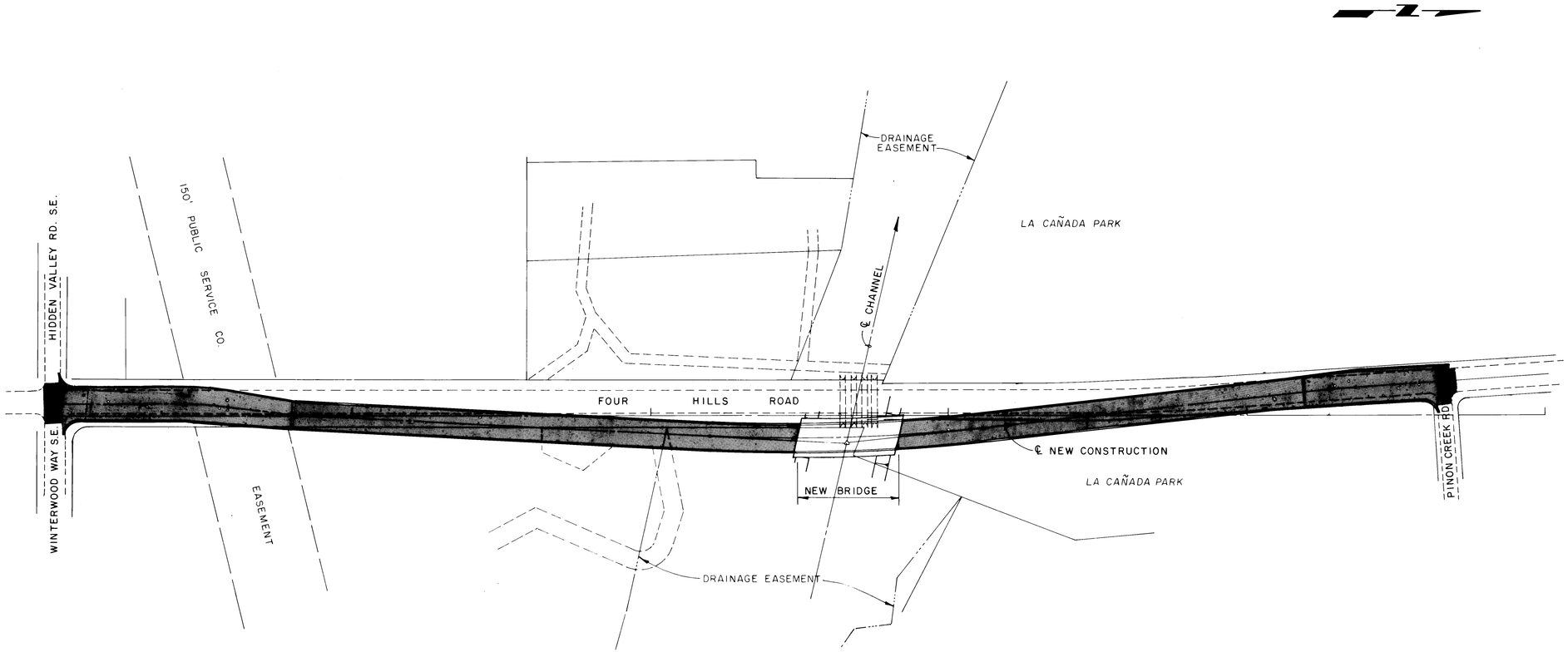

LAYOUT MAP

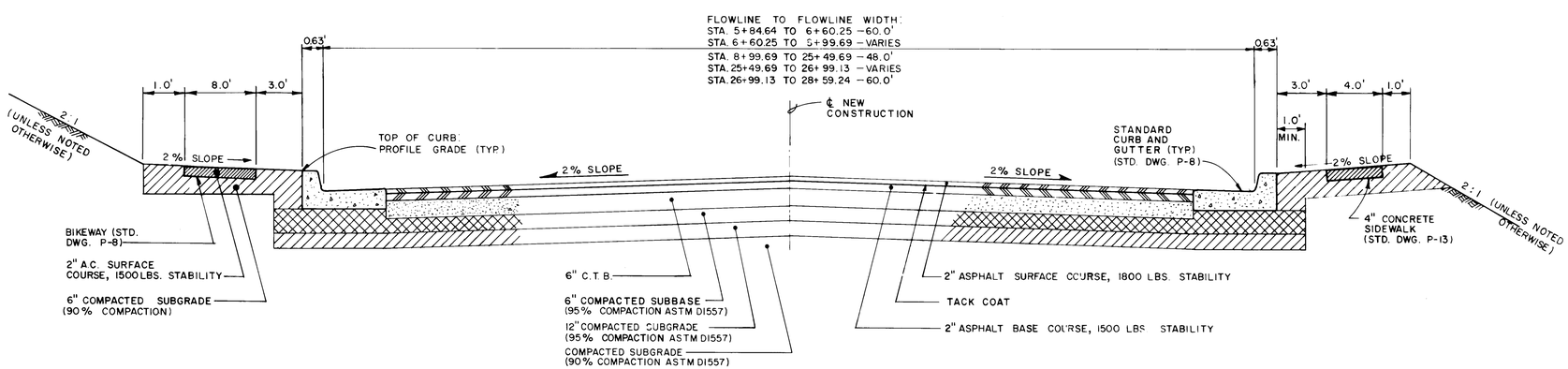

TYPICAL ROADWAY SECTION

NO SCALE

NOTES:

1. THE PAVEMENT SECTION FOR THE TURNOUT AT STA. 22+16 SHALL BE A 6" COMPACTED SUBBASE (95% COMPACTION) OVERLAIN BY A 2" ASPHALT SURFACE COURSE (1500 LBS. STABILITY). THE CROSS SECTION SHALL HAVE A 2% CROWNED CENTERLINE.

CONTRACTOR MAY SUBSTITUTE AT HIS OPTION THE FOLLOWING PAVEMENT SECTION AT NO ADDITIONAL COST TO THE OWNER:

2" ASPHALT SURFACE COURSE, 1800 LBS. STABILITY TACK COAT

2" ASPHALT BASE COURSE, 1500 LBS. STABILITY

4" A.T.B.

8" COMPACTED SUBBASE (95% COMPACTION)

12" COMPACTED SUBGRADE (95% COMPACTION)

COMPACTED SUBGRADE (90% COMPACTION)

AS BUILT INFORMATION

CONTRACTOR
WORK STAKED BY
INSPECTOR'S ACCEPTANCE BY — DATE
FIELD VERIFICATION BY — DATE
DRAWINGS CORRECTED BY — DATE
MICRO-FILM INFORMATION
RECORDED BY — DATE
NO.

BENCH MARKS

SURVEY INFORMATION

NO.	FIELD NOTES BY	DATE

ENGINEER'S SEAL

JUL 11, 1985

NO.	DATE	REMARKS	BY

REVISIONS

DESIGNED BY S.A.M. DATE MAY, 1985
DRAWN BY J.L.B DATE MAY, 1985
CHECKED BY DATE

26 18 26 0289

BOVAY ENGINEERS, INC.
ALBUQUERQUE
HOUSTON • SPOKANE • AUSTIN • BATON ROUGE

CITY OF ALBUQUERQUE
MUNICIPAL DEVELOPMENT DEPARTMENT
ENGINEERING DIVISION

TITLE: TIJERAS ARROYO CROSSING AT FOUR HILLS ROAD

LOCATION MAP & TYPICAL ROADWAY SECTION

APPROVALS	ENGINEER	DATE	APPROVALS	ENGINEER	DATE
City Engineer		6/24/86	Liquid Waste	N.A.	4/11/86
~~A.C.E.~~ - Design		6-24-86	Traffic		6/24/86
A.C.E. - Hydrology		6/24/86	Water	N.A.	4/11/86
	N/A				

DRAWING NO.	MAP NO.	SHEET	OF
1826	L-23-Z	C-2	39

AF 22440B

GENERAL NOTES

1. WORKMANSHIP AND MATERIALS SHALL CONFORM TO THE CITY OF ALBUQUERQUE INTERIM STANDARD SPECIFICATIONS FOR PUBLIC WORKS CONSTRUCTION 1985 EDITION, AND THE SUPPLEMENTAL TECHNICAL SPECIFICATIONS.

2. TWO (2) WORKING DAYS PRIOR TO ANY EXCAVATION, THE CONTRACTOR MUST CONTACT LINE LOCATING SERVICE 765-1234, FOR LOCATION OF EXISTING UTILITIES.

3. PRIOR TO CONSTRUCTION, THE CONTRACTOR SHALL EXCAVATE AND VERIFY THE HORIZONTAL AND VERTICAL LOCATIONS OF ALL OBSTRUCTIONS. SHOULD A CONFLICT EXIST, THE CONTRACTOR SHALL NOTIFY THE ENGINEER OR SURVEYOR SO THAT THE CONFLICT CAN BE RESOLVED WITH MINIMUM AMOUNT OF DELAY.

4. DURING THE MONTHS OF JULY, AUGUST, OR SEPTEMBER, ANY GRADING WITHIN OR ADJACENT TO A WATERCOURSE DEFINED AS A MAJOR FACILITY SHALL PROVIDE FOR EROSION CONTROL AND THE SAFE PASSAGE OF THE 10-YEAR DESIGN STORM RUNOFF DURING THE CONSTRUCTION PHASE.

5. CONTRACTOR'S WORK IS TO BE STRICTLY LIMITED TO RIGHT OF WAY AND CONSTRUCTION EASEMENT. ACCESS WILL BE CONTROLLED INTO AND OUT OF THE CONSTRUCTION SITE BY THE CITY FIELD ENGINEER AND/OR CITY INSPECTOR.

6. CONCRETE MATERIALS SPECIFIED FOR REMOVAL SHALL BE DISPOSED OF BY THE CONTRACTOR AND COST SHALL BE CONSIDERED INCIDENTAL TO THE WORK.

7. UTILITY NOTES:

WATER
A. WATER LINE OUTAGES SHALL BE SCHEDULED SO AS TO NOT OCCUR DURING THE SUMMER MONTHS.
B ALL SALVAGE MATERIALS SHALL BE CITY PROPERTY AND SHALL BE DELIVERED TO THE CITY YARDS. SEE SECTION 701.15 OF STD. SPECIFICATIONS.
C. WATER LINE MATERIALS SHALL CONFORM TO SECTION 700 OF THE STANDARD SPECIFICATIONS.
D. RIGID JOINTS SHALL BE INSTALLED ON THE BRIDGE CROSSING.
E. WHERE PIPE MUST PENETRATE CONCRETE, STEEL PIPE SLEEVES (OF AT LEAST 2 INCHES GREATER I.D. THAN PIPE O.D.) SHALL BE INSTALLED, WITH THE ANNULAR SPACE GROUT FILLED.

TELEPHONE
UNDERGROUND TELEPHONE LINES TO BE RELOCATED BY MOUNTAIN BELL. CONTRACTOR SHALL COORDINATE HIS WORK WITH THIS RELOCATION.

POWER LINES
OVERHEAD POWER LINES AND POLES TO BE RELOCATED BY P.N.M. CONTRACTOR SHALL COORDINATE HIS WORK WITH THIS RELOCATION.

GAS
UNDERGROUND GAS LINE TO BE RELOCATED BY GAS CO. OF N.M. CONTRACTOR SHALL COORDINATE HIS WORK WITH THIS RELOCATION.

- [x] ALL UTILITIES AND UTILITY SERVICE LINES SHALL BE INSTALLED PRIOR TO PAVING.
- [x] BACKFILL COMPACTION SHALL BE ACCORDING TO SPECIFIED STREET USE.
- [x] TACK COAT REQUIREMENTS SHALL BE DETERMINED BY THE CITY ENGINEER.
- [x] SIDEWALKS AND WHEELCHAIR RAMPS WITHIN THE CURB RETURNS SHALL BE CONSTRUCTED WHEREVER A NEW CURB RETURN IS CONSTRUCTED.
- [ ] IF CURB IS DEPRESSED FOR A DRIVEPAD OR HANDICAP RAMP, THE DRIVEPAD OR RAMP SHALL BE CONSTRUCTED PRIOR TO ACCEPTANCE OF THE CURB AND GUTTER.
- [x] ALL STORM DRAINAGE FACILITIES SHALL BE COMPLETED PRIOR TO FINAL ACCEPTANCE.

8. ALL SALVAGE MATERIAL SHALL BE CITY PROPERTY AND SHALL BE DELIVERED TO THE CITY YARDS. SEE SECTION 701.15 OF STD. SPECIFICATIONS.

9. CITY WATER MAPS INDICATE 2 - 1" SINGLE SERVICE CONNECTIONS ON PORTIONS OF 10" D.I. PIPE TO BE REPLACED. THESE HAVE NOT BEEN FIELD LOCATED. CONTRACTOR SHALL BE RESPONSIBLE FOR LOCATING THESE IN THE FIELD.

LEGEND

DESCRIPTION	NEW	EXISTING
SANITARY SEWER LINE	SAS	SAS
SANITARY SEWER MANHOLE		
STORM DRAIN LINE		SD
STORM DRAIN MANHOLE		
STORM DRAIN INLETS		
WATER LINE	W	W
GATE VALVE		
TEES		
BENDS		
CAPS & PLUGS		
CURB & GUTTER		
SIDEWALKS	4' S.W.	4' S.W.
ASPHALT PAVING		
VALLEY GUTTER	V.G.	V.G.
GAS LINE	G	G
UNDERGROUND TELEPHONE		UT
POWER OR TELEPHONE POLE		
BLOCK WALL		
CHAIN LINK FENCE		
FIELD FENCE		
FILL SLOPE		
CUT SLOPE		
SWALE		
RIGHT OF WAY LINES		
CENTER LINE		
TELEPHONE LINE	T	T
GUARD RAIL		
LIMIT PAVEMENT REMOVED		

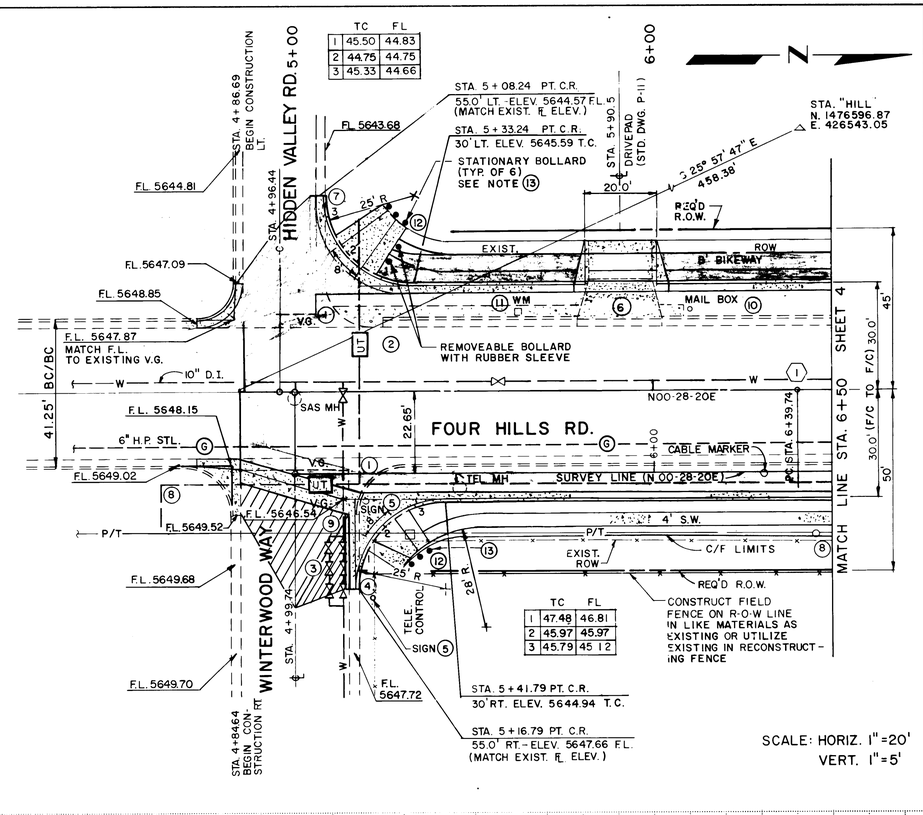

	TC	FL
1	45.50	44.83
2	44.75	44.75
3	45.33	44.66

	TC	FL
1	47.48	46.81
2	45.97	45.97
3	45.79	45.12

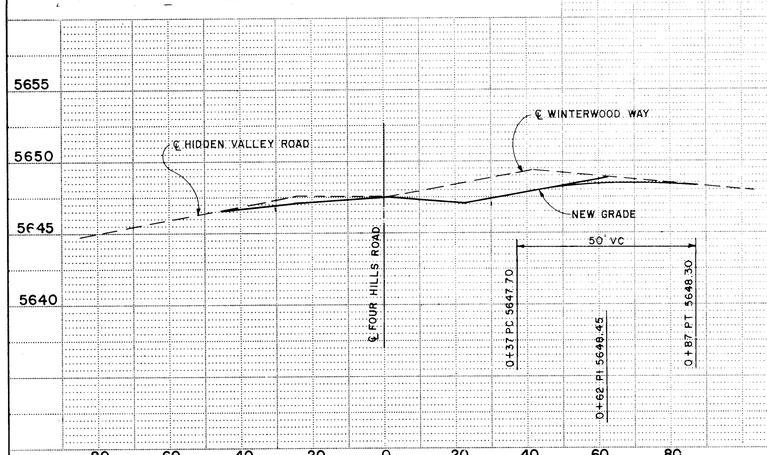

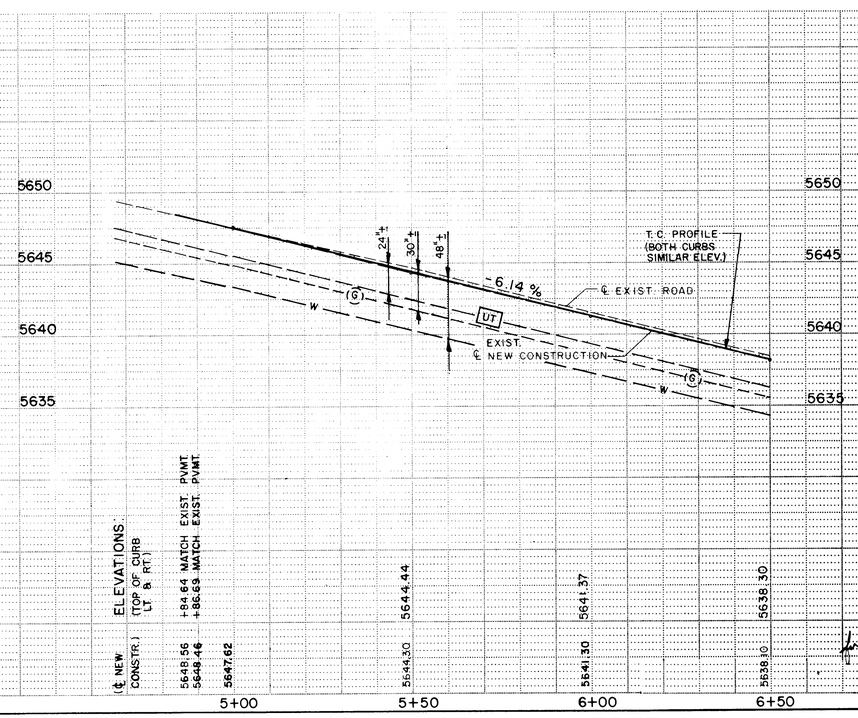

FOUR HILLS RD.

℄ CURVE DATA

P.I. = STA. 7+14.74
(P.I. = SURVEY LINE STA. 7+14.74, 22.65' LT.)

R = 2400.85'
Dc = 2° 23' 11"
L = 149.95'
T = 75.00'
Δ = 3° 34' 42"

NOTES:

1. REMOVE EXISTING VALLEY GUTTER.
2. REMOVE EXISTING ASPHALT PAVEMENT AND CONCRETE CURB & GUTTER.
3. EXISTING UNDERGROUND WATER PRESSURE REDUCING STATION - DO NOT DISTURB.
4. IN LAST QUARTER OF CURB RETURN, TRANSITION FROM "STANDARD CURB & GUTTER" TO "MOUNTABLE CURB (ROLL TYPE)" (STD. DWG. P-8).
5. REMOVE AND REPLACE STOP/STREET SIGN AS DIRECTED BY TRAFFIC ENGINEER.
6. REMOVE EXISTING CONCRETE DRIVEPAD AND SIDEWALK.
7. IN LAST QUARTER OF CURB RETURN, TRANSITION FROM "STANDARD CURB & GUTTER" TO "GUTTER AT DRIVEPAD" (STD. DWG. P-8). PROVIDE 1/2" EXPANSION JOINT AT POINT 3.
8. UNDERGROUND TELEPHONE AND OVERHEAD POWER LINE TO BE RELOCATED BY MOUNTAIN BELL AND PNM.
9. CONSTRUCT TOP OF OUTER EDGE OF VALLEY GUTTER TO MATCH EXISTING PAVEMENT ON WINTERWOOD WAY. CONSTRUCT VALLEY GUTTER PER STD. DWG. P-9.
10. RESET MAILBOX BEHIND LIMITS OF CONSTRUCTION. THIS ITEM IS INCIDENTAL TO THE WORK AND NO SEPARATE PAYMENT WILL BE MADE THEREFORE.
11. WATER METER TO BE RELOCATED BY CONTRACTOR TO LOCATION DESIGNATED BY THE CITY.
12. CONSTRUCT WHEEL CHAIR RAMP PER STD. DWG. P-17, CASE II.
13. FURNISH AND INSTALL BOLLARDS PER STD. DWG. K-22. SPACE AT 4'-6" O.C.

26 1826 0389

SOVAY ENGINEERS, INC.
ALBUQUERQUE
HOUSTON • SPOKANE • AUSTIN • BATON ROUGE

AS BUILT INFORMATION
CONTRACTOR
WORK STAKED BY
INSPECTOR'S ACCEPTANCE BY
FIELD VERIFICATION BY
DRAWINGS CORRECTED BY
DATE
MICRO-FILM INFORMATION
RECORDED BY
DATE
NO.

BENCH MARKS
B.M. 7-L23 EL. 5580.39
STA. 14+58.08 SURVEY LINE 2.25' LT.
A SQUARE CHISELED ON TOP OF CONCRETE CURB

SURVEY INFORMATION
FIELD NOTES
NO. BY DATE

ENGINEER'S SEAL
JUL 11, 1986

NO.	DATE	REMARKS	BY
1	12/87	AS BUILT TO DATE	MSD

REVISIONS

DESIGN
DESIGNED BY SAM DATE MAY, 1985.
DRAWN BY JLB DATE MAY, 1985.
CHECKED BY DATE

CITY OF ALBUQUERQUE
MUNICIPAL DEVELOPMENT DEPARTMENT
ENGINEERING DIVISION

TITLE: TIJERAS ARROYO CROSSING AT FOUR HILLS ROAD

PLAN & PROFILE Sta. 4+84.69 to 6+50

APPROVALS	ENGINEER	DATE	APPROVALS	ENGINEER	DATE
City Engineer		6/24/86	Liquid Waste	N.A.	4/11/86
A-E-E - Design		6/24/86	Traffic		6/24/86
A-E-E - Hydrology		6/24/86	Water	N.A.	4/11/86
Date	N.A.				

DRAWING NO.	MAP NO.	SHEET	OF
1826	L-23-Z	C-3	39

AF 22440B

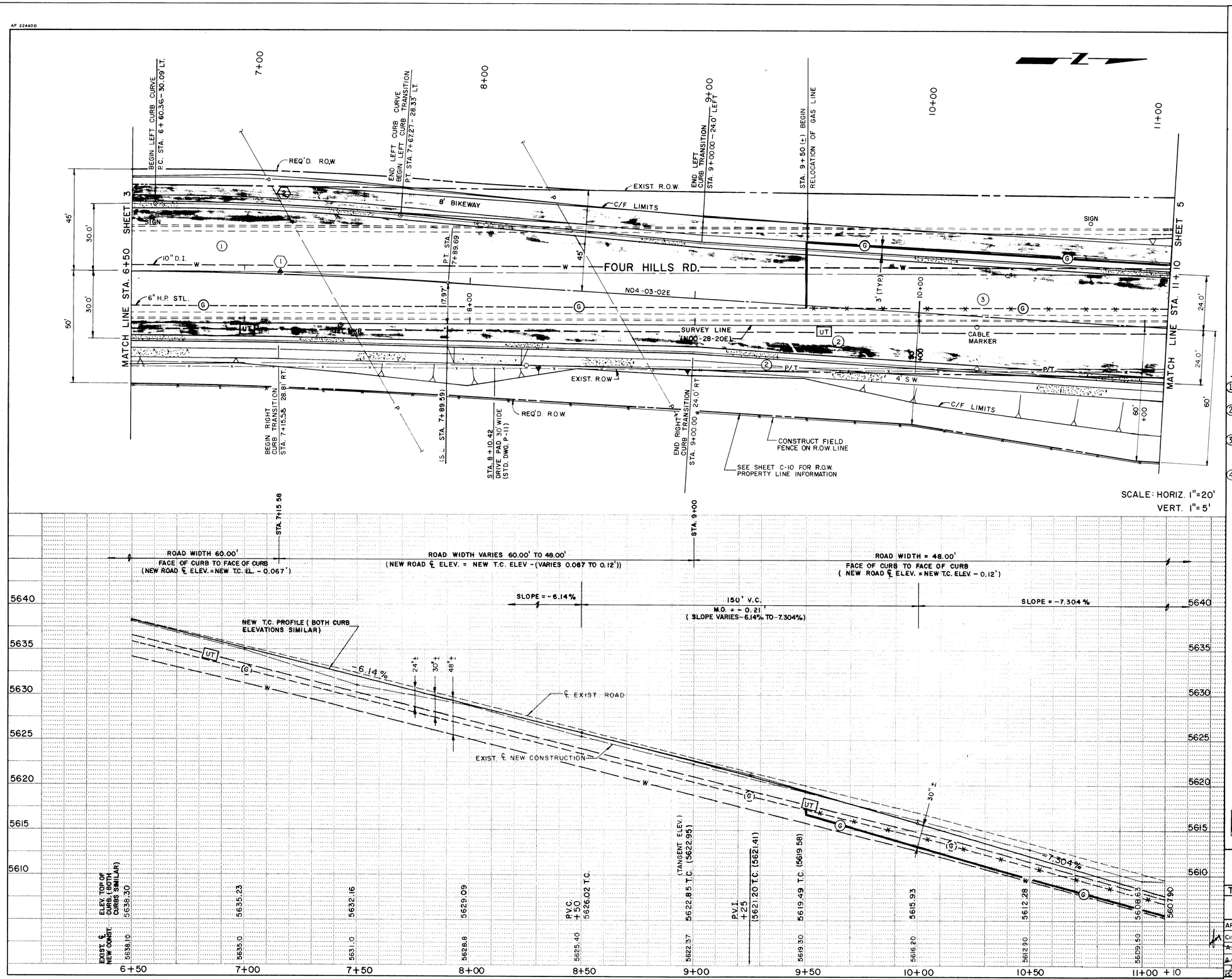

① ℄ CURVE DATA

P.I. = STA. 7+14.74
(P.I. = SURVEY LINE STA. 7+14.74, 22.65' LT.)
R = 2400.85'
Dc = 2° 23' 11"
L = 149.95'
T = 75.00'
Δ = 3° 34' 42"

② LEFT CURB CURVE DATA

R = 1150.00'
Dc = 4° 59' 56"
L = 108.31'
T = 54.20'
Δ = 5° 23' 46"

NOTES:

1. REMOVE EXISTING ASPHALT PAVEMENT AND CONCRETE CURB & GUTTER.
2. UNDERGROUND TELEPHONE AND OVERHEAD POWER LINES TO BE RELOCATED BY MOUNTAIN BELL AND PNM.
3. REMOVE ABANDONED SEGMENT OF 6" STEEL GAS LINE BETWEEN STATIONS 9+50 AND 13+50. WORK TO BE COORDINATED BY CONTRACTOR WITH THE GAS COMPANY.
4. ALL DISTURBED AREAS NOT TO BE PAVED SHALL BE SEEDED.

26 18260489

SOVAY ENGINEERS, INC.
ALBUQUERQUE
HOUSTON • SPOKANE • AUSTIN • BATON ROUGE

AS BUILT INFORMATION	
CONTRACTOR	
WORK STAKED BY	DATE
INSPECTORS ACCEPTANCE BY	DATE
FIELD VERIFICATION BY	DATE
DRAWINGS CORRECTED BY	DATE
MICRO-FILM INFORMATION	
RECORDED BY	DATE
NO.	

BENCH MARKS
B.M. 7-L23 EL. 5580.39
STA. 14+58.08 SURVEY LINE 2.25' LT.
A SQUARE CHISELED ON TOP OF CONCRETE CURB

SURVEY INFORMATION
FIELD NOTES

NO.	BY	DATE

ENGINEER'S SEAL
JUL 11, 1985

NO.	DATE	REMARKS	BY
1	12/87	AS BUILT TO DATE	MSD

REVISIONS

DESIGN		
DESIGNED BY	SAM	DATE MAY, 1985
DRAWN BY	J.L.B	DATE MAY, 1985
CHECKED BY		DATE

CITY OF ALBUQUERQUE
MUNICIPAL DEVELOPMENT DEPARTMENT
ENGINEERING DIVISION

TITLE: TIJERAS ARROYO CROSSING AT FOUR HILLS ROAD

PLAN & PROFILE Sta. 6+50 to 11+10

APPROVALS	ENGINEER	DATE	APPROVALS	ENGINEER	DATE
City Engineer		6/24/86	Liquid Waste	N.A. Kleier	6/11/86
A.C.E. - Design		6/24/86	Traffic		6/24/86
A.C.E. - Hydrology		6/24/86	Water	N.A. Kleier	6/11/86

DRAWING NO.	MAP NO.	SHEET	OF
1826	L-23-Z	C-4	39

AF 22440B

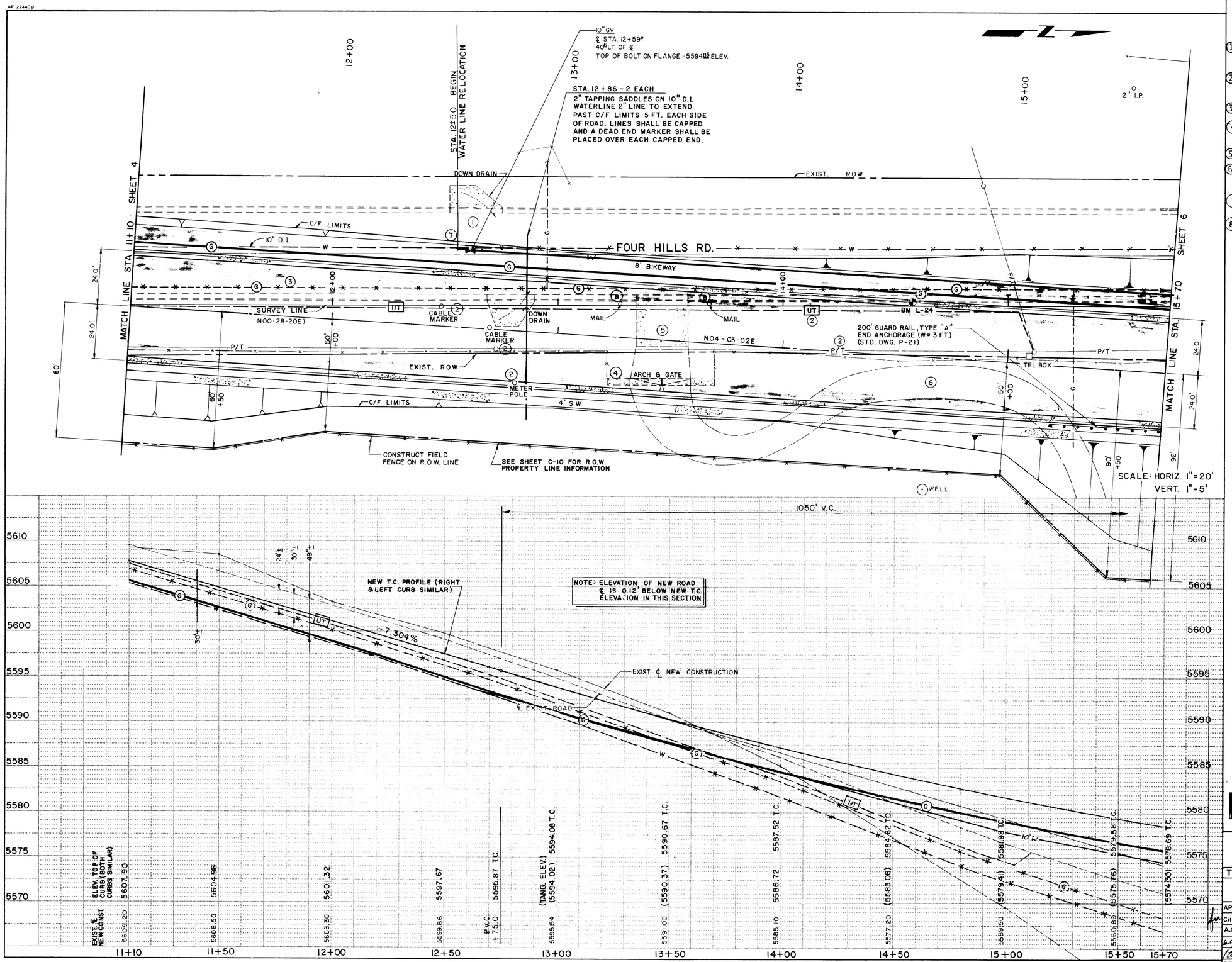

NOTES:

1. REMOVE EXISTING ASPHALT PAVEMENT, CONCRETE CURB & GUTTER, AND CONCRETE DOWN DRAINS (2).
2. UNDERGROUND TELEPHONE AND OVERHEAD POWER LINES TO BE RELOCATED BY MOUNTAIN BELL AND PNM. (COORDINATION SHALL BE ACCOMPLISHED BY THE CONTRACTOR)
3. REMOVE ABANDONED SEGMENT OF 6" STEEL GAS LINE BETWEEN STATIONS 9+50 AND 13+50.
4. EXISTING ARCH GATE TO BE REMOVED BY PROPERTY OWNER.
5. REMOVE EXISTING CONCRETE DRIVEPAD.
6. REMOVE EXISTING ASPHALT DRIVEWAY TO REQUIRED R.O.W. LINE. SCARIFY AND RECOMPACT SUBGRADE.
7. STA. 12+50± BEGIN WATER LINE RELOCATION AT NEAREST JOINT. △ = 3° - 34'-42".
8. EXISTING MAILBOXES TO BE RELOCATED AT STA. 8+10.42 DRIVEPAD AS DIRECTED BY THE ENGINEER. WORK SHALL BE CONSIDERED INCIDENTAL AND NO SEPERATE PAYMENT MADE THEREFOR.

AS BUILT INFORMATION

CONTRACTOR
WORK STAKED BY — DATE
INSPECTORS ACCEPTANCE BY — DATE
A SQUARE CHISELED ON TOP OF CONCRETE CURB
FIELD VERIFICATION BY — DATE
DRAWINGS CORRECTED BY — DATE

MICRO-FILM INFORMATION
RECORDED BY — DATE
NO.

BENCH MARK'S
B.M. 7-L24 EL. 5580.39
STA. 14+58.08 (SURVEY LINE) 2.25' LT.

SURVEY INFORMATION
FIELD NOTES

NO.	BY	DATE

ENGINEER'S SEAL

JUL 11, 1986

NO.	DATE	REMARKS	BY
△	12/87	AS BUILT TO DATE	MSD

REVISIONS

DESIGN
DESIGNED BY SAM DATE MAY, 1985
DRAWN BY J.L.B DATE MAY, 1985
CHECKED BY DATE

26 18 26 0589

SOVAY ENGINEERS, INC.
ALBUQUERQUE
HOUSTON • SPOKANE • AUSTIN • BATON ROUGE

CITY OF ALBUQUERQUE
MUNICIPAL DEVELOPMENT DEPARTMENT
ENGINEERING DIVISION

TITLE: TIJERAS ARROYO CROSSING AT FOUR HILLS ROAD

PLAN & PROFILE Sta. 11+10 to 15+70

APPROVALS	ENGINEER	DATE	APPROVALS	ENGINEER	DATE
City Engineer		6/24/86	Liquid Waste	N.A. Rhea	4/11/86
A.C.E. - Design		6/24/86	Traffic	David Hoffman	6/24/86
A.C.E. - Hydrology		6/24/86	Water	N.A. Rhea	4/11/86
		6/24/86			

DRAWING NO.	MAP NO.	SHEET	OF
1826	L-23-Z	C-5	39

AF 22440B

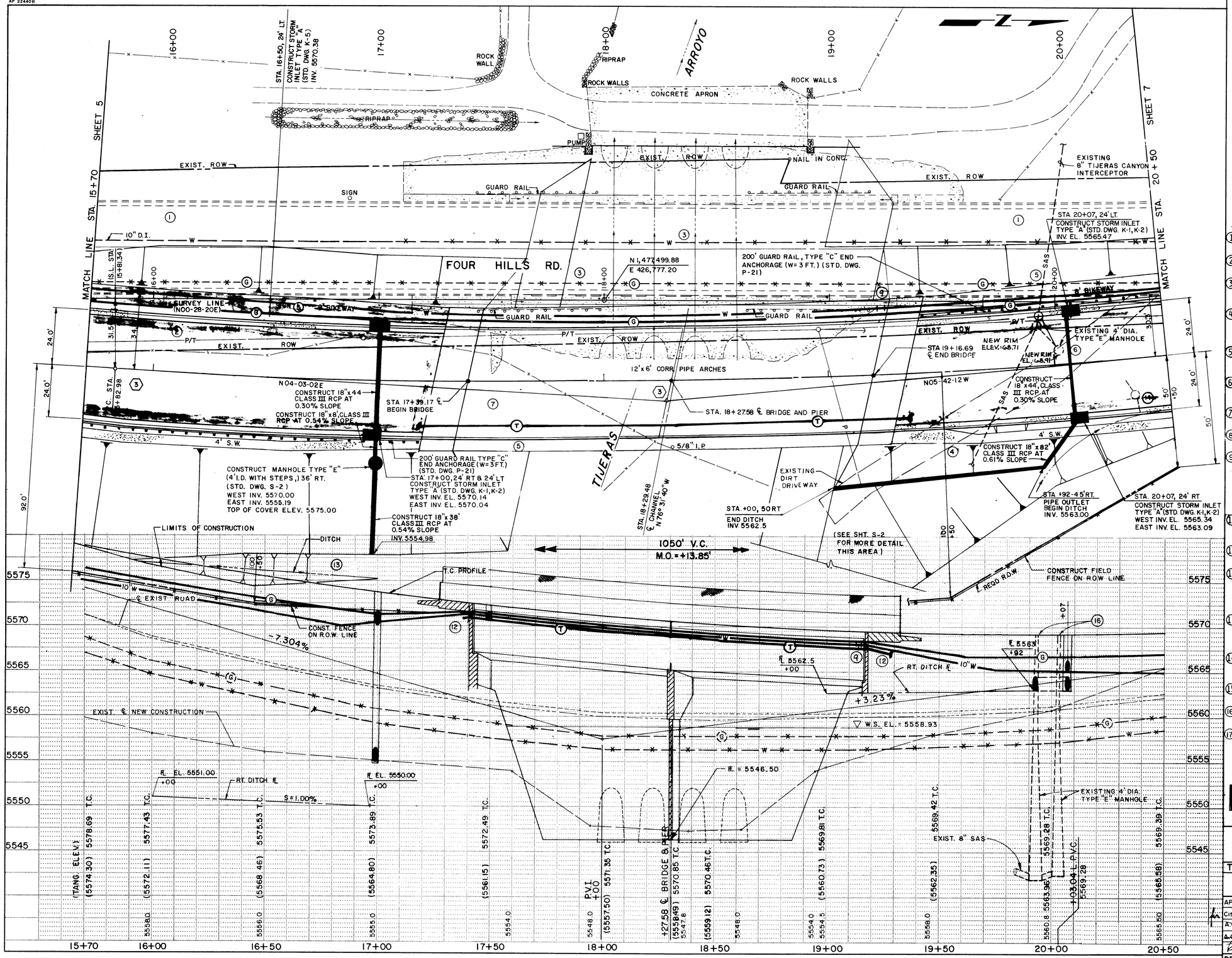

FOUR HILLS RD.

(3) CENTER LINE CURVE DATA

P.C. = STA. 15+82.98

P.T. = STA. 20+70.67

P.I. = STA. 18+27.42

(P.I. = SURVEY LINE STA. 18+25.30, 46.80' RT.)

R = 2864.79'

Dc = 2° 00' 00"

L = 487.69'

T = 244.44'

Δ = 9° 45' 14"

NOTES:

1. REMOVE EXISTING ASPHALT PAVEMENT AND CONCRETE CURB & GUTTER.
2. OVERHEAD TELEPHONE AND POWER LINES TO BE RELOCATED BY MOUNTAIN BELL AND PNM.
3. REMOVE ABANDONED SEGMENTS OF DUCTILE IRON WATER AND STEEL GAS LINES BETWEEN STAS. 17+25 AND 19+25.
4. PROVIDE 20:1 TAPER OF CENTERLINE OF SIDEWALK TO MATCH CENTERLINE OF 5' WIDE SIDEWALK ON BRIDGE (NET CENTERLINE SHIFT: 1'-10.5").
5. PROVIDE 20:1 TAPER ON CENTERLINE OF BIKEWAY TO MATCH CENTERLINE OF 10' BIKELANE ON BRIDGE (NET CENTERLINE SHIFT: 1'-4.5").
6. ADJUST EXISTING MANHOLE FRAMES AND COVERS (2) TO MATCH NEW PAVEMENT SURFACE (SEE STD. DWG. S-2-4).
7. SEE SHEET S2 FOR DETAILS OF THE BRIDGE GRADING PLAN.
8. NOT USED
9. STA 19+14± INSTALL 1 10"x10"x4" TEE WITH 4" ALL FLANGED FITTINGS GATE VALVE AND 1 LF± 4" PIPE SHALL BE CONSIDERED INCIDENTAL TO THE WORK AND NO SEPERATE PAYMENT WILL BE MADE THEREFORE.
10. CONTRACTOR SHALL CONTACT THE CITY WATER SYSTEMS DIVISION (823-4052) PRIOR TO REMOVING THE WATER LINE FROM SERVICE.
11. FOR DETAILS ON WATER LINE BRIDGE CROSSING, SEE SHEET S4, S8, S9
12. IN EACH BRIDGE EMBANKMENT, A SOLID SLEEVE (LONG, MECHANICAL JOINT) SHALL BE PROVIDED ON THE WATER LINE TO ALLOW FOR EXPANSION-CONTRACTION OF THE WATER LINE CROSSING.
13. DITCH REQUIRED AT TOE OF FILL SLOPE ON RIGHT SIDE TO DRAIN BETWEEN STATION 16+00 AND 17+00. DITCH SECTION SHOWN ON STATION 16+50 CROSS SECTION.
14. REMOVE CONCRETE WET WELL AND DRAIN PIPES. REMOVE CONCRETE DRAINAGE TROUGH WITHIN R.O.W.
15. REMOVE AND DISPOSE ALL TREES WITHIN THE LIMITS OF CONSTRUCTION.
16. ADJUST EXISTING MANHOLES TO NEW PAVEMENT GRADE. SEE DETAIL SHEET C-8
17. ALL WATERLINE DEFLECTIONS WILL BE MADE THROUGH THE LENGTH OF THE JOINT. DEFLECTIONS WILL NOT BE ALLOWED AT THE BELL AND SPIGOT.

1 2 3 4 5 6 7 8 9 10 11 12
2 6 1 8 2 6 0 6 8 9

SOVAY ENGINEERS, INC.
ALBUQUERQUE
HOUSTON • SPOKANE • AUSTIN • BATON ROUGE

AS BUILT INFORMATION	
CONTRACTOR	
WORK STAKED BY	DATE
SURVEY CHECKED BY	
ACCEPTANCE BY	DATE
FIELD VERIFICATION BY	DATE
DRAWINGS CORRECTED BY	DATE
MICRO-FILM INFORMATION	
RECORDED BY	DATE
NO.	

BENCH MARKS
B.M. 7-L23 EL. 5580.39
STA. 14+58.08 SURVEY LINE 2.25' LT.
A SQUARE CHISELED ON TOP OF CONCRETE CURB

SURVEY INFORMATION		
FIELD NOTES		
NO.	BY	DATE

SEAL

ENGINEER'S SEAL

JUL 11, 1986

NO.	DATE	REMARKS	BY
1	12/87	AS BUILT TO DATE	MSD

REVISIONS

		DATE
DESIGNED BY		DATE
DRAWN BY		DATE
CHECKED BY		DATE

CITY OF ALBUQUERQUE
MUNICIPAL DEVELOPMENT DEPARTMENT
ENGINEERING DIVISION

TITLE: TIJERAS ARROYO CROSSING AT FOUR HILLS ROAD

PLAN & PROFILE Sta. 15+70 to 20+50

APPROVALS	ENGINEER	DATE	APPROVALS	ENGINEER	DATE
City Engineer		6/24/86	Liquid Waste	W.A. Kleier	4/11/86
A.C.E.-Design		6/24/86	Traffic		6/24/86
A.C.E.-Hydrology		6/24/86	Water	W.A. Kleier	4/11/86

DRAWING NO.	MAP NO.	SHEET	OF
1826	L-23-Z	C-6	39

AF 22440B

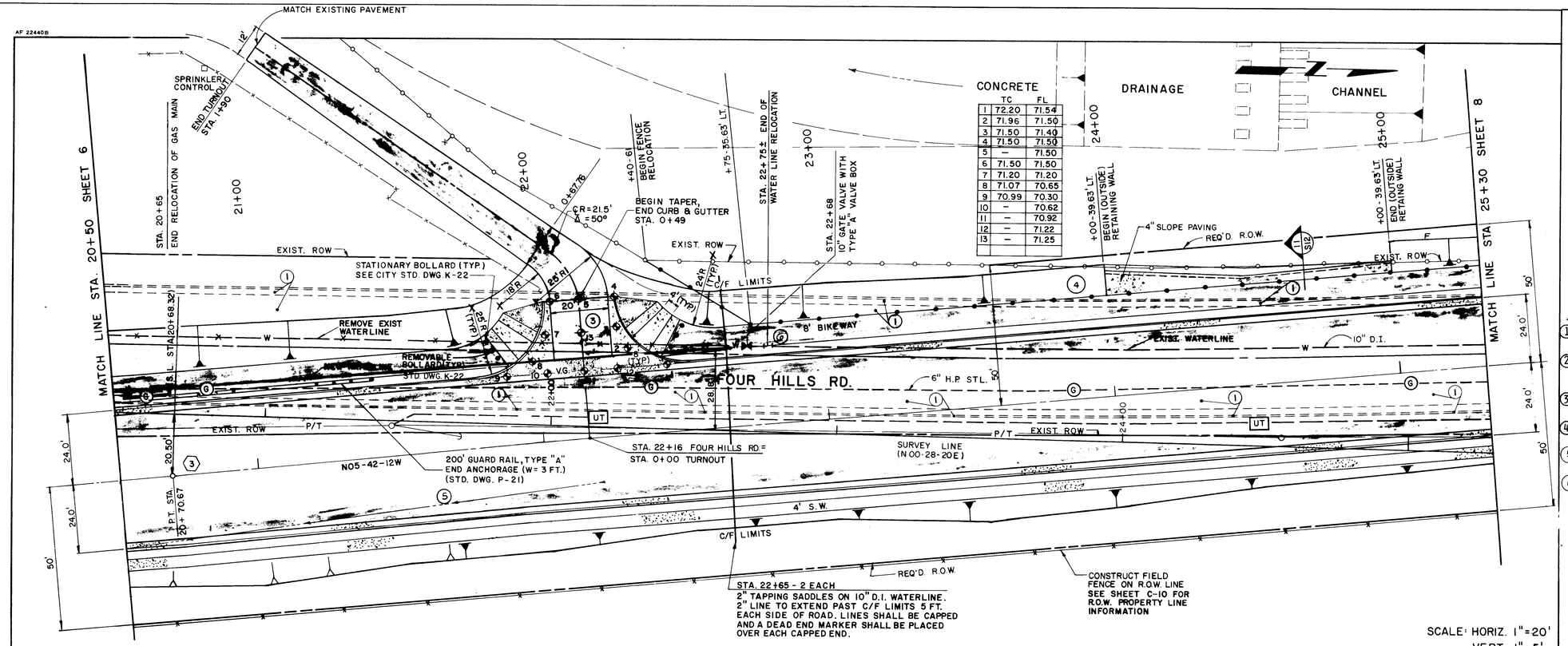

	TC	FL
1	72.20	71.54
2	71.96	71.50
3	71.50	71.40
4	71.50	71.50
5	—	71.50
6	71.50	71.50
7	71.20	71.20
8	71.07	70.65
9	70.99	70.30
10	—	70.62
11	—	70.92
12	—	71.22
13	—	71.25

③ ℄ CURVE DATA

P.C. = STA. 15+82.98
P.T. = STA. 20+70.67
P.I. = STA. 18+27.42
(P.I. = SURVEY LINE STA. 18+25.30, 46.80' RT.)
R = 2864.79'
Dc = 2° 00' 00"
L = 487.69'
T = 244.44'
Δ = 9° 45' 14"

NOTES:

1. REMOVE EXISTING ASPHALT PAVEMENT AND CONCRETE CURB & GUTTER.
2. OVERHEAD POWER LINES AND UNDERGROUND TELEPHONE TO BE RELOCATED BY PNM AND MOUNTAIN BELL.
3. SEE SHEET C-2 (NOTE 1) FOR TURNOUT PAVEMENT SECTION.
4. SEE SHEET S-12 FOR RETAINING WALL DETAILS.
5. REMOVE CONCRETE DRAINAGE TROUGH.
6. STA. 22+75± END OF WATER LINE RELOCATION, MAKE CONNECTION AT NEAREST JOINT OUTSIDE THE LIMITS, A TEMPORARY PLUG SHALL BE INSTALLED IN THE END OF THE EXISTING LINE SO AS TO PROVIDE SERVICE TO PINON CREEK ROAD DURING CONSTRUCTION. THE INSTALLATION OF THE PLUG SHALL BE CONSIDERED INCIDENTAL TO THE WORK AND NO SEPARATE PAYMENT MADE THEREFOR.

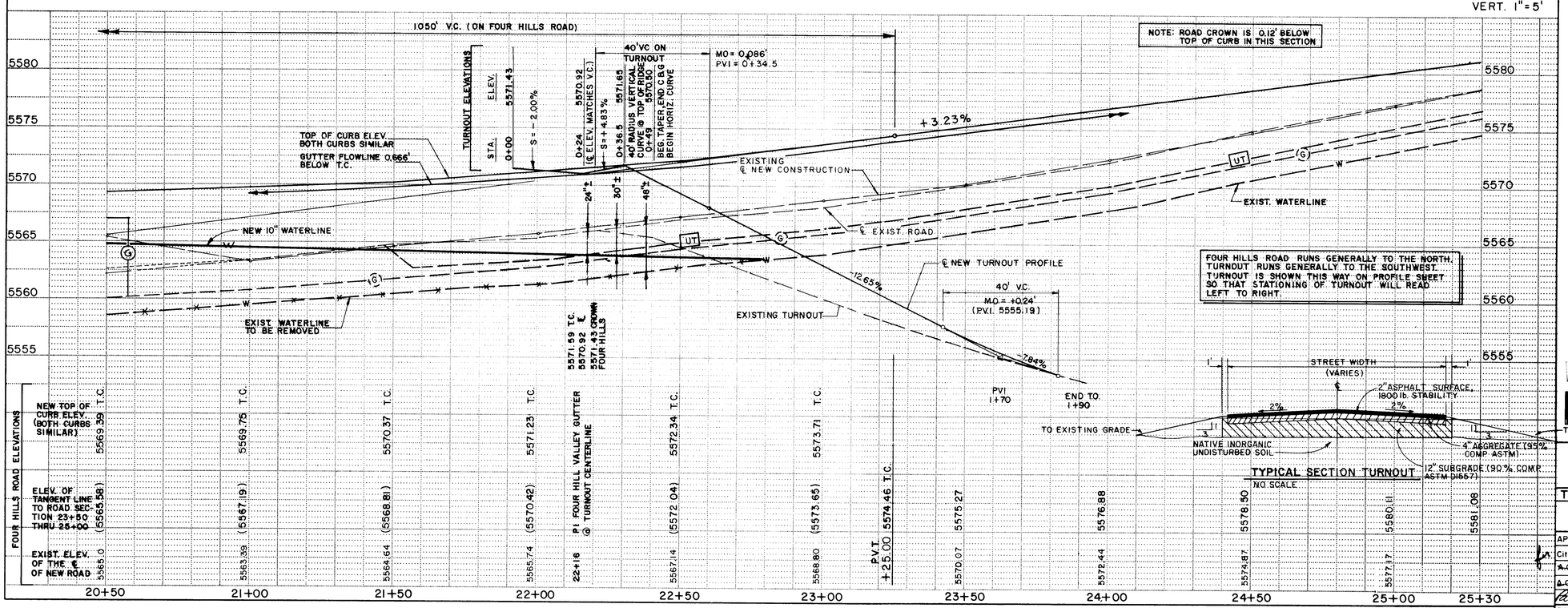

TYPICAL SECTION TURNOUT
NO SCALE

AS BUILT INFORMATION

CONTRACTOR
WORK STAKED BY
INSPECTORS ACCEPTANCE BY
FIELD VERIFICATION BY
DRAWINGS CORRECTED BY
DATE

MICRO-FILM INFORMATION
RECORDED BY
DATE
NO.

BENCH MARKS
B. M. 7-L23 EL. 5580.39
STA. 14+58.08 SURVEY LINE 2.25' LT.
A SQUARE CHISELED IN TOP OF CONCRETE CURB

SURVEY INFORMATION
FIELD NOTES

NO.	BY	DATE

ENGINEER'S SEAL
JUL 11, 1986

NO.	DATE	REMARKS	BY
1	12/87	AS BUILT TO DATE	MSD

REVISIONS

DESIGN
DESIGNED BY SAM DATE MAY, 1985
DRAWN BY J.L.B DATE MAY, 1985
CHECKED BY DATE

26 1826 0789

BOVAY ENGINEERS, INC.
ALBUQUERQUE
HOUSTON • SPOKANE • AUSTIN • BATON ROUGE

CITY OF ALBUQUERQUE
MUNICIPAL DEVELOPMENT DEPARTMENT
ENGINEERING DIVISION

TITLE: TIJERAS ARROYO CROSSING AT FOUR HILLS ROAD

PLAN & PROFILE Sta. 20+50 to 25+30

APPROVALS	ENGINEER	DATE	APPROVALS	ENGINEER	DATE
City Engineer		6/24/86	Liquid Waste		9/11/86
A.C.E.-Design		6/24/86	Traffic		6/24/86
A.C.E.-Hydrology		6/24/86	Water		9/11/86
Parks		6/24/86			

DRAWING NO.	MAP NO.	SHEET	OF
1826	L-23-Z	C-7	39

AF 22440B

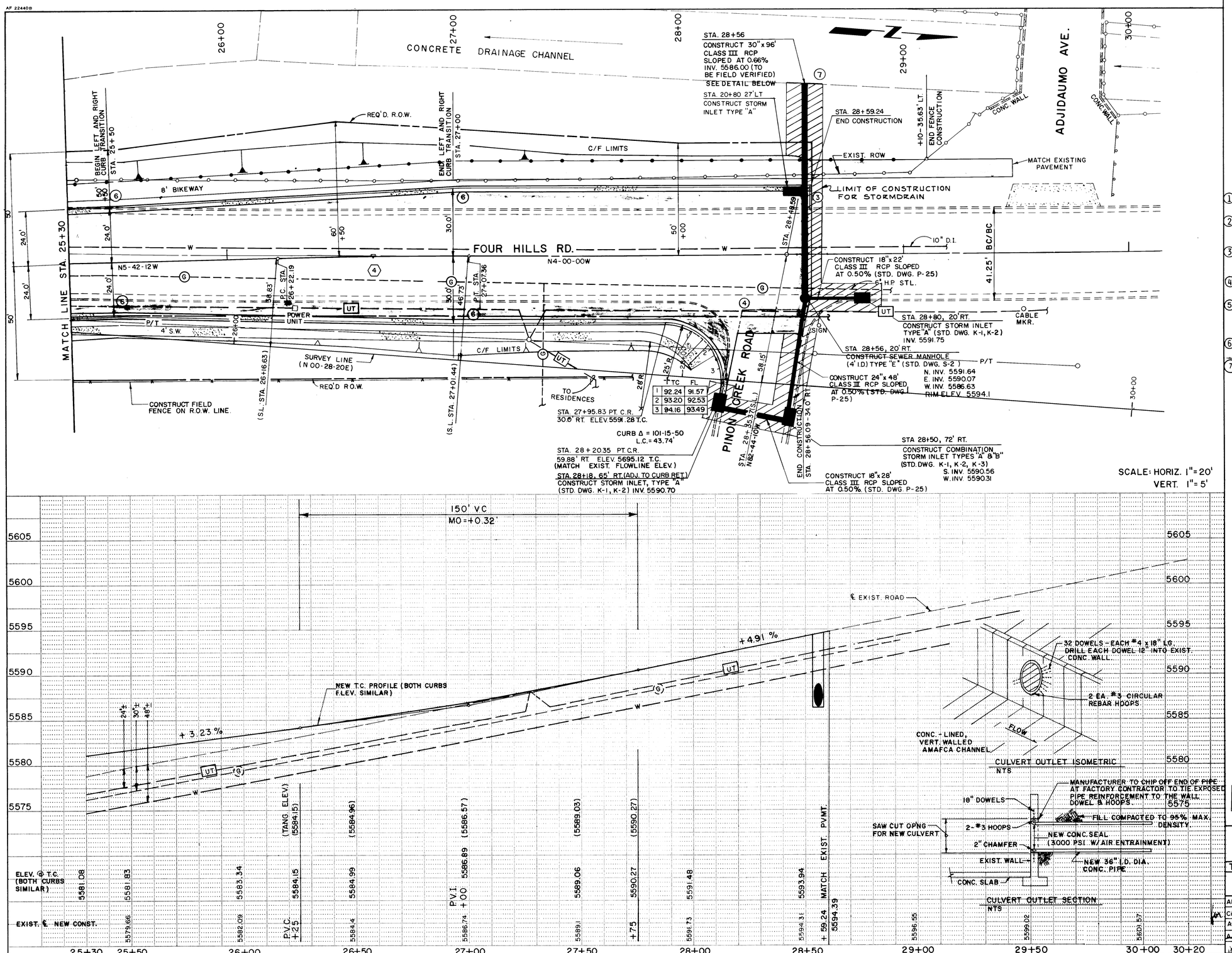

	TC	FL
1	92.24	91.57
2	93.20	92.53
3	94.16	93.49

④ ℄ CURVE DATA

P.C. = STA. 26+22.19
P.T. = STA. 27+07.36
P.I. = STA 26+64.78
(P.I. = SURVEY LINE STA. 26+58.99, 43.41' LT.)
R = 2864.79'
Dc = 2°
L = 85.17'
T = 42.59'
Δ = 1° 44' 12"

1. REMOVE EXISTING ASPHALT PAVEMENT AND CONCRETE CURB & GUTTER.
2. OVERHEAD POWER LINES AND UNDERGROUND TELEPHONE LINES TO BE RELOCATED BY PNM AND MOUNTAIN BELL.
3. CONSTRUCT ASPHALT CURB (STD. DWG. P-8) TO CONNECT ENDS OF EXISTING AND NEW STANDARD CURB & GUTTER SECTIONS.
4. REMOVE EXISTING CONCRETE VALLEY GUTTER TO THE LINES SHOWN.
5. NOT USED
6. PROVIDE 1000-FOOT RADIUS ON CURB & GUTTER AT TRANSITION POINTS.
7. PENETRATE CONCRETE DRAINAGE CHANNEL AT INVERT ELEVATION SHOWN. LEAVE PIPE END FLUSH WITH WALL WITH SMOOTH CONCRETE GROUT IN THE ANNULAR.

AS BUILT INFORMATION

CONTRACTOR
WORK STAKED BY
INSPECTOR'S NOTES — DATE
ACCEPTANCE BY — DATE
FIELD VERIFICATION BY — DATE
DRAWINGS CORRECTED BY — DATE
MICRO-FILM INFORMATION
RECORDED BY — DATE
NO.

BENCH MARKS

B.M. 7-L23 EL. 5580.39
STA. 14+58.08 SURVEY LINE 2.25' LT.
A SQUARE CHISELED IN TOP OF CONCRETE CURB

SURVEY INFORMATION

FIELD NOTES

NO.	BY	DATE

ENGINEER'S SEAL

JUL 11, 1986

NO.	DATE	REVISIONS	BY
1	12/87	AS BUILT TO DATE	MSD

REMARKS

DESIGN

DESIGNED BY SAM DATE MAY, 1985
DRAWN BY JLB DATE MAY, 1985
CHECKED BY DATE

26 18260889

BOVAY ENGINEERS, INC.
ALBUQUERQUE
HOUSTON • SPOKANE • AUSTIN • BATON ROUGE

CITY OF ALBUQUERQUE
MUNICIPAL DEVELOPMENT DEPARTMENT
ENGINEERING DIVISION

TITLE: TIJERAS ARROYO CROSSING AT FOUR HILLS ROAD

PLAN & PROFILE Sta. 25+30 to 28+59.24

APPROVALS	ENGINEER	DATE	APPROVALS	ENGINEER	DATE
City Engineer		6/24/86	Liquid Waste	N.A. Rivera	4/11/86
A.C.E.-Design		6/24/86	Traffic		6/24/86
A.C.E.-Hydrology		6/24/86	Water	N.A. Rivera	4/11/86
	N/A				

DRAWING NO.	MAP NO.	SHEET	OF
1826	L-23-Z	C-8	39

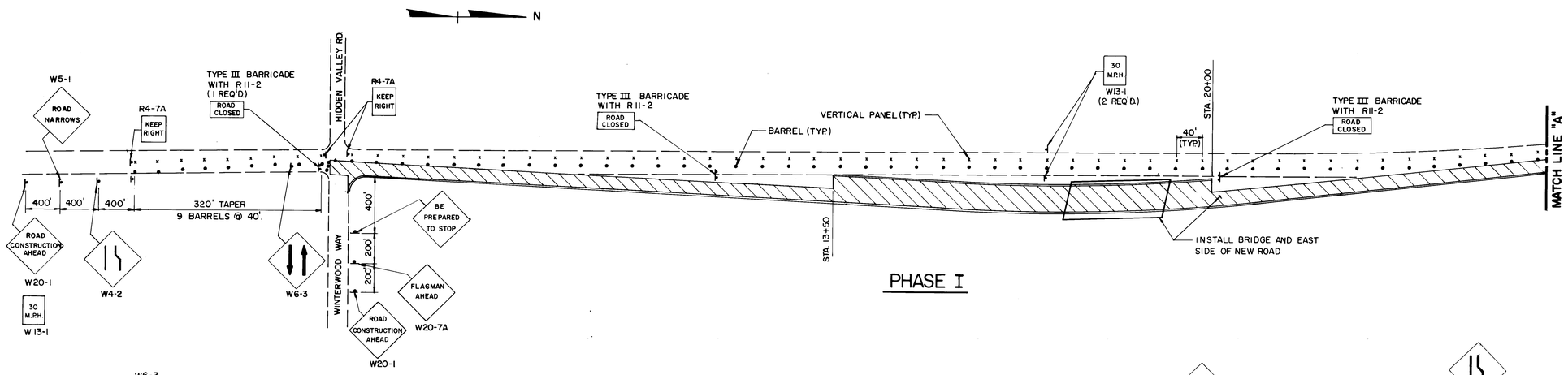

PHASE I

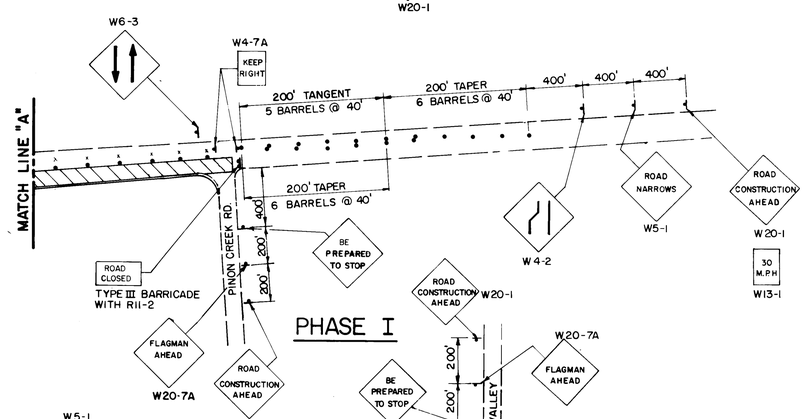

PHASE I

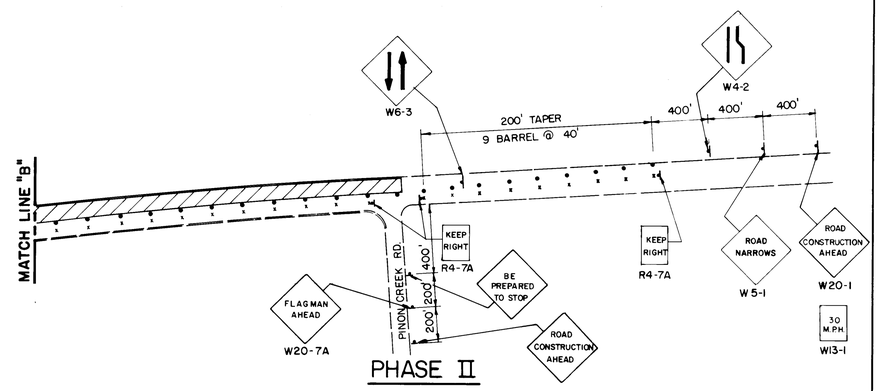

PHASE II

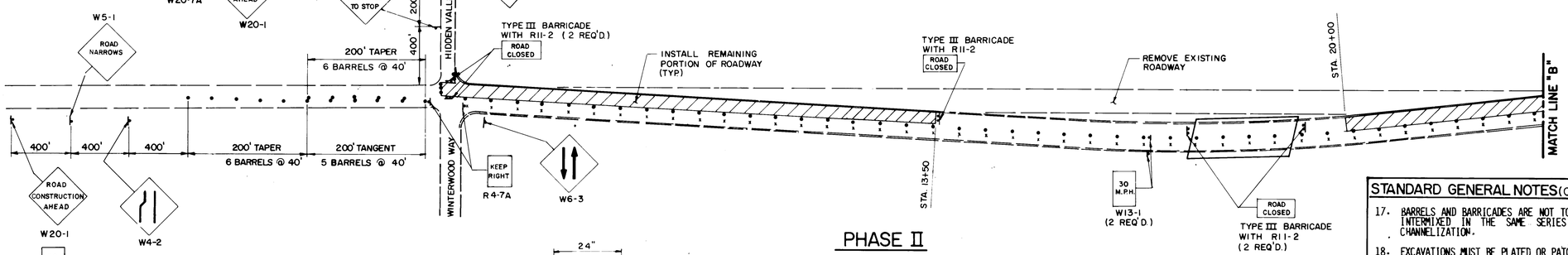

PHASE II

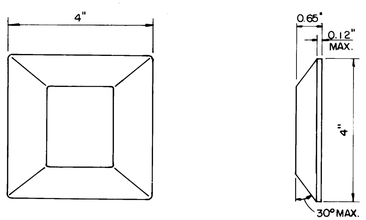

TWO WAY YELLOW REFLECTIVE MARKER
TYPE D

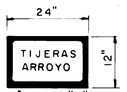

PERMANENT SIGN

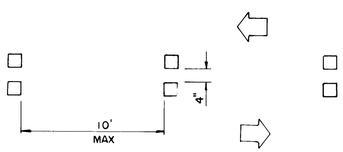

TYPICAL INSTALLATION
OF RAISED PAVEMENT MARKERS
(SEE NOTE 2)

GENERAL NOTES

1. ONE ELEVEN-FOOT LANE MUST BE MAINTAINED IN BOTH DIRECTIONS AT ALL TIMES ON FOUR HILLS ROAD.
2. RAISED PAVEMENT MARKERS MAY BE USED AS AN ALTERNATIVE TO VERTICAL PANELS DURING PHASE I ONLY. VERTICAL PANELS WILL BE REQUIRED FOR THE FIRST 120' NORTH OF WINTERWOOD WAY AND FOR THE FIRST 120' SOUTH OF PINON CREEK RD. IF RAISED PAVEMENT MARKERS ARE USED. SEE SKETCH FOR PLACEMENT CRITERIA.
3. WHENEVER WORK IS BEING DONE WITHIN 5 FEET OF THE TRAVELED LANES, A FLAGMAN AND SIGNALING (W27-A) SHALL BE REQUIRED.
4. CONTRACTOR SHALL CONTACT THE NEWS MEDIA AND PROVIDE IMPENDING CONSTRUCTION SIGNS AS PROVIDED IN THE SPECIAL PROVISIONS.

PHASING PLAN

PHASE I

DIVERT FOUR HILLS ROAD TRAFFIC TO THE WEST SIDE OF THE EXISTING ROAD AS SHOWN. INSTALL THE NEW BRIDGE, THE NORTHBOUND LANE AND THE SOUTHBOUND FROM STATION 13+50 TO 20+00 WHILE MAINTAINING TWO 11-FOOT THRU LANES ON THE WEST SIDE OF THE EXISTING ROADWAY. RAISED PAVEMENT MARKERS MAY BE USED IN LIEU OF VERTICAL PANELS (SEE NOTE 2.). TRAFFIC ON WINTERWOOD WAY AND PINON CREEK ROAD SHALL BE MAINTAINED AT ALL TIMES DURING CONSTRUCTION THROUGH SINGLE LANE CLOSURES AND FLAGMEN (6-9 A.M. AND 4-6 P.M.) TO DIRECT TRAFFIC. TWO-WAY TRAFFIC SHALL BE MAINTAINED ON HIDDEN VALLEY ROAD.

PHASE II

DIVERT FOUR HILLS ROAD TRAFFIC ON THE EAST SIDE OF THE NEWLY CONSTRUCTED ROAD AS SHOWN. WHILE MAINTAINING TWO 11-FOOT THRU LANES, INSTALL THE REMAINING PORTIONS OF THE NEW ROADWAY. REMOVE EXISTING BRIDGE STRUCTURE. TRAFFIC ON HIDDEN VALLEY ROAD SHALL BE MAINTAINED AT ALL TIMES DURING CONSTRUCTION THROUGH SINGLE LANE CLOSURES AND FLAGMEN (6-9 A.M. AND 4-6 P.M.) TO DIRECT TRAFFIC. TWO-WAY TRAFFIC SHALL BE MAINTAINED ON PINON CREEK ROAD AND WINTERWOOD WAY AT ALL TIMES.

STANDARD GENERAL NOTES

1. ALL TRAFFIC CONTROL DEVICES SHALL COMPLY WITH CHAPTER VI OF THE 1978 EDITION OF THE "MANUAL FOR UNIFORM TRAFFIC CONTROL DEVICES".
2. THE CONTRACTOR SHALL PREPARE AND SUBMIT TO THE PROJECT ENGINEER A DETAILED CONSTRUCTION SCHEDULE WHICH IS SUBJECT TO THE APPROVAL OF THE CITY TRAFFIC ENGINEER, 3 WORKING DAYS PRIOR TO COMMENCING CONSTRUCTION.
3. UNLESS OTHERWISE PROVIDED AS PART OF THE CONSTRUCTION DOCUMENTS, THE CONTRACTOR SHALL PREPARE AND SUBMIT TO THE PROJECT ENGINEER A DETAILED TRAFFIC CONTROL PLAN, WHICH IS SUBJECT TO THE APPROVAL OF THE CITY TRAFFIC ENGINEER, 3 WORKING DAYS IN ADVANCE OF ANY REQUIRED CLOSURES.
4. CONTRACTOR SHALL NOTIFY THE FOLLOWING SERVICES 24 HOURS IN ADVANCE OF ANY COMPLETE CLOSURES: POLICE DEPARTMENT, FIRE DEPARTMENT, AMBULANCE SERVICES, AND THE TRANSIT DEPARTMENT.
5. PERMITS TO BARRICADE OR DETOUR TRAFFIC MUST BE OBTAINED FOR EACH PHASE OF CONSTRUCTION THROUGH THE TRAFFIC ENGINEERS OFFICE AT LEAST 24 HOURS IN ADVANCE OF CONSTRUCTION ACTIVITIES.
6. ALL ADVANCE WARNING SIGNS AND BARRICADES MUST BE INSTALLED BEFORE CONSTRUCTION BEGINS AS DIRECTED BY THE ENGINEER.
7. ALL SIGN LOCATIONS WILL BE SELECTED IN THE FIELD AND APPROVED BY THE PROJECT ENGINEER.
8. ALL ADVANCE WARNING SIGNS SHALL BE 48" X 48" MINIMUM.
9. ALL ADVANCE WARNING SIGNS NOT DIRECTLY APPLICABLE SHALL BE REMOVED, COMPLETELY COVERED OR TURNED AWAY FROM ONCOMING TRAFFIC.
10. ALL CONSTRUCTION SIGNING SHALL BE BLACK ON A REFLECTORIZED ORANGE FIELD UNLESS OTHERWISE SPECIFIED. ALL CONSTRUCTION BARRICADES AND CHANNELIZATION DEVICES SHALL BE ORANGE ON WHITE, REFLECTORIZED, UNLESS OTHERWISE SPECIFIED.
11. ALL SIGNS WILL BE GROUND MOUNTED ON SINGLE OR DOUBLE POSTS WITH THE BOTTOM OF THE SIGN 7 FEET ABOVE SIDEWALK LEVEL. EXISTING POSTS MAY BE USED AT SOME LOCATIONS, WITH THE APPROVAL OF THE PROJECT ENGINEER. PORTABLE SIGNS SUPPORTS WILL BE ACCEPTABLE AS AN ALTERNATE FOR SIGNS WHICH ARE IN PLACE FOR LESS THAN 1 WEEK.
12. ALLL EXISTING REGULATORY SIGNS THAT NEED TO BE REMOVED, RELOCATED OR RE-INSTALLED SHALL BE DONE BY THE CITY OF ALBUQUERQUE, TRAFFIC ENGINEERING DIVISION. THE CONTRACTOR SHALL NOTIFY THE TRAFFIC ENGINEERING DIVISION 3 WORKING DAYS IN ADVANCE OF ANY REQUIRED WORK.
13. TRAFFIC CONTROL DEVICES REQUIRED AFTER DARK ARE TO BE EQUIPPED WITH WARNING LIGHTS. TYPE (A) FLASHING WARNING LIGHTS SHALL BE USED ON ALL ADVANCE WARNING SIGNS AND ON ALL DEVICES WHICH ARE INTENDED TO WARN MOTORISTS OR PEDESTRIANS OF HAZARDS OR OBSTRUCTIONS IN OR NEAR THE TRAVEL PATH. TYPE (C) STEADY BURN LIGHTS SHALL BE USED ON ALL DEVICES WHICH ARE INTENDED TO DEFINE THE TRAVEL PATH.
14. ALL SIGNS, BARRICADES AND/OR BARRELS WILL BE REFLECTORIZED. ALL BARRELS MAY HAVE SAND OR WATER BALLAST LIMITED TO 100 LBS.
15. ALL SIGNS, BARRICADES AND/OR BARRELS WILL BE MOVED FORWARD AS THE CONSTRUCTION PROGRESSES (WHERE APPLICABLE).
16. CONTRACTOR SHALL INSPECT AND MAINTAIN ALL BARRICADES AT LEAST ONCE EACH DAY EXCEPT FOR BARRICADES ON OR ADJACENT TO ARTERIAL AND COLLECTOR STREETS WHICH SHALL BE CHECKED TWICE DAILY INCLUDING INSPECTION DURING HOURS OF DARKNESS.

STANDARD GENERAL NOTES (CONT'D)

17. BARRELS AND BARRICADES ARE NOT TO BE INTERMIXED IN THE SAME SERIES OF CHANNELIZATION.
18. EXCAVATIONS MUST BE PLATED OR PATCHED PRIOR TO OPENING TO TRAFFIC.
19. A MINIMUM WIDTH OF 11 FEET SHALL BE PROVIDED FOR TRAFFIC IN ONE DIRECTION.
20. EQUIPMENT AND MATERIALS ARE NOT TO BE STORED WITHIN THE STREET RIGHT-OF-WAY DURING NON-WORKING HOURS.
21. THE CONTRACTOR SHALL MAINTAIN ACCESS TO BUSINESSES AND RESIDENCES ADJACENT TO THE CONSTRUCTION AREA.
22. THE CONTRACTOR SHALL PROVIDE AND MAINTAIN A SAFE AND ADEQUATE MEANS OF CHANNELIZING PEDESTRIAN TRAFFIC AROUND ALL WORK AREAS THROUGHOUT THE PERIOD OF CONSTRUCTION. ALL SUCH CHANNELIZATION SHALL BE ARRANGED TO PREVENT PEDESTRIANS FROM HAVING TO ENTER THE ROADWAY IN ORDER TO PASS AROUND THE WORK AREAS.
23. THE CONTRACTOR SHALL BE REQUIRED TO KEEP THE PUBLIC INFORMED, THROUGH THE LOCAL NEWS MEDIA, OF CONSTRUCTION OPERATIONS INVOLVING STREET OR LANE CLOSURES, AND SHALL PROVIDE THE CITY TRAFFIC ENGINEER DOCUMENTED PROOF THAT THIS HAS BEEN DONE.
24. ALL SIGNS SHALL BE MOUNTED ON SIGN STANDS OR TYPE III BARRICADES.

AS BUILT INFORMATION		
CONTRACTOR		
WORK STAKED BY		
INSPECTOR'S ACCEPTANCE BY		DATE
FIELD VERIFICATION BY		DATE
DRAWINGS CORRECTED BY		DATE
MICRO-FILM INFORMATION		
RECORDED BY		DATE
NO.		

BENCH MARKS		

SURVEY INFORMATION		
FIELD NOTES		
NO.	BY	DATE

ENGINEER'S SEAL

REVISIONS			
NO.	DATE	REMARKS	BY

DESIGNED BY S.A.M. DATE MAY, 1985
DRAWN BY J.L.B DATE MAY, 1985
CHECKED BY DATE

CITY OF ALBUQUERQUE
MUNICIPAL DEVELOPMENT DEPARTMENT
ENGINEERING DIVISION

TITLE: TIJERAS ARROYO CROSSING AT FOUR HILLS ROAD

CONSTRUCTION PHASING PLAN

APPROVALS	ENGINEER	DATE	APPROVALS	ENGINEER	DATE
City Engineer		6/24/86	Liquid Waste	N.A.	6/11/86
A.C.E.-Design		6/24/86	Traffic		6/24/86
A.C.E.-Hydrology		6/24/86	Water	N.A.	6/11/86
Parks	N/A				

DRAWING NO.	MAP NO.	SHEET	OF
1826	L-23-Z	C-9	39

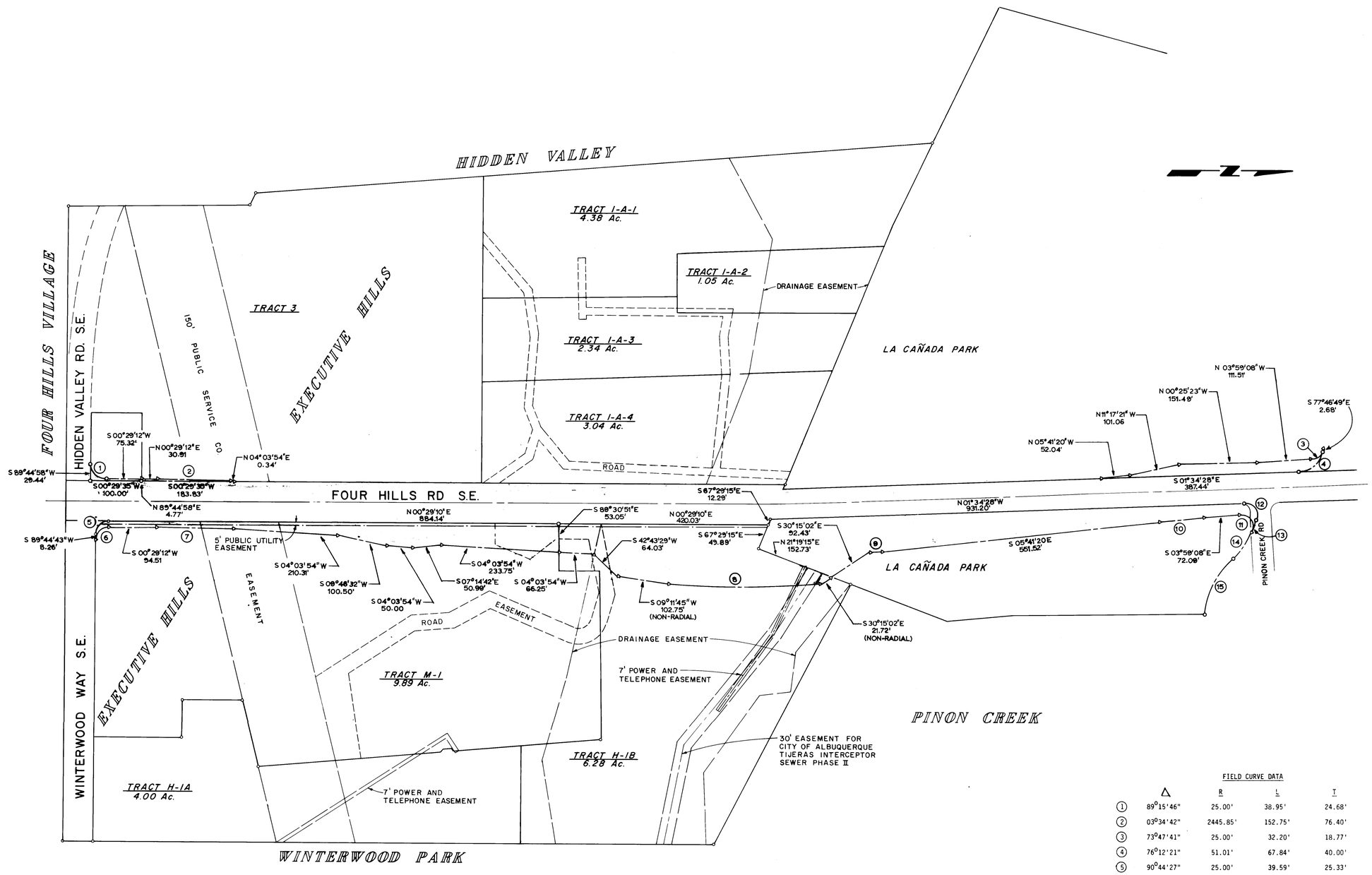

RIGHT OF WAY MAP

SCALE: 1" = 100'

FIELD CURVE DATA

	Δ	R	L	T
1	89°15'46"	25.00'	38.95'	24.68'
2	03°34'42"	2445.85'	152.75'	76.40'
3	73°47'41"	25.00'	32.20'	18.77'
4	76°12'21"	51.01'	67.84'	40.00'
5	90°44'27"	25.00'	39.59'	25.33'
6	90°44'29"	25.00'	39.59'	25.33'
7	03°34'42"	2350.85'	146.82'	73.43'
8	06°00'00"	2964.79'	310.48'	155.38'
9	00°24'48"	2914.79'	21.03'	10.52'
10	01°42'12"	2814.79'	83.68'	41.84'
11	115°35'51"	25.00'	50.44'	39.70'
12	101°05'34"	25.00'	44.11'	30.38'
13	12°05'37"	139.30'	29.40'	14.76'
14	26°30'11"	139.30'	64.44'	32.81'
15	36°00'12"	189.30'	118.95'	61.51'

GENERAL NOTES:

1. CONTRACTOR SHALL CONFINE CONSTRUCTION ACTIVITIES TO THE R.O.W. DENOTED BY THE SHADED AREA.

AS BUILT INFORMATION
CONTRACTOR
WORK STAKED BY — DATE
INSPECTORS ACCEPTANCE BY — DATE
FIELD VERIFICATION BY — DATE
DRAWINGS CORRECTED BY — DATE

MICRO-FILM INFORMATION
RECORDED BY — DATE
NO.

BENCH MARKS

SURVEY INFORMATION
FIELD NOTES
NO. | BY | DATE

ENGINEER'S SEAL
JULY 11, 1986

NO.	DATE	REMARKS	BY
		REVISIONS	

DESIGNED BY — DATE
DRAWN BY MEY/BMS DATE 2-27-85
CHECKED BY — DATE

26 18261089

SOVAY ENGINEERS, INC.
ALBUQUERQUE
HOUSTON • SPOKANE • AUSTIN • BATON ROUGE

CITY OF ALBUQUERQUE
MUNICIPAL DEVELOPMENT DEPARTMENT
ENGINEERING DIVISION

TITLE: TIJERAS ARROYO CROSSING
FOUR HILLS RD. RIGHT OF WAY

APPROVALS	ENGINEER	DATE	APPROVALS	ENGINEER	DATE
City Engineer		6/24/86	Liquid Waste	R. Tena	6/24/86
~~A.C.E.~~ - Design		6/24/86	Traffic		6/24/86
~~A.C.E.~~ - Hydrology		6/24/86	Water	R. Tena	6/24/86
Parks	N/A				

DRAWING NO. 1826 | MAP NO. L-23-Z | SHEET C-10 OF 39

6801-040

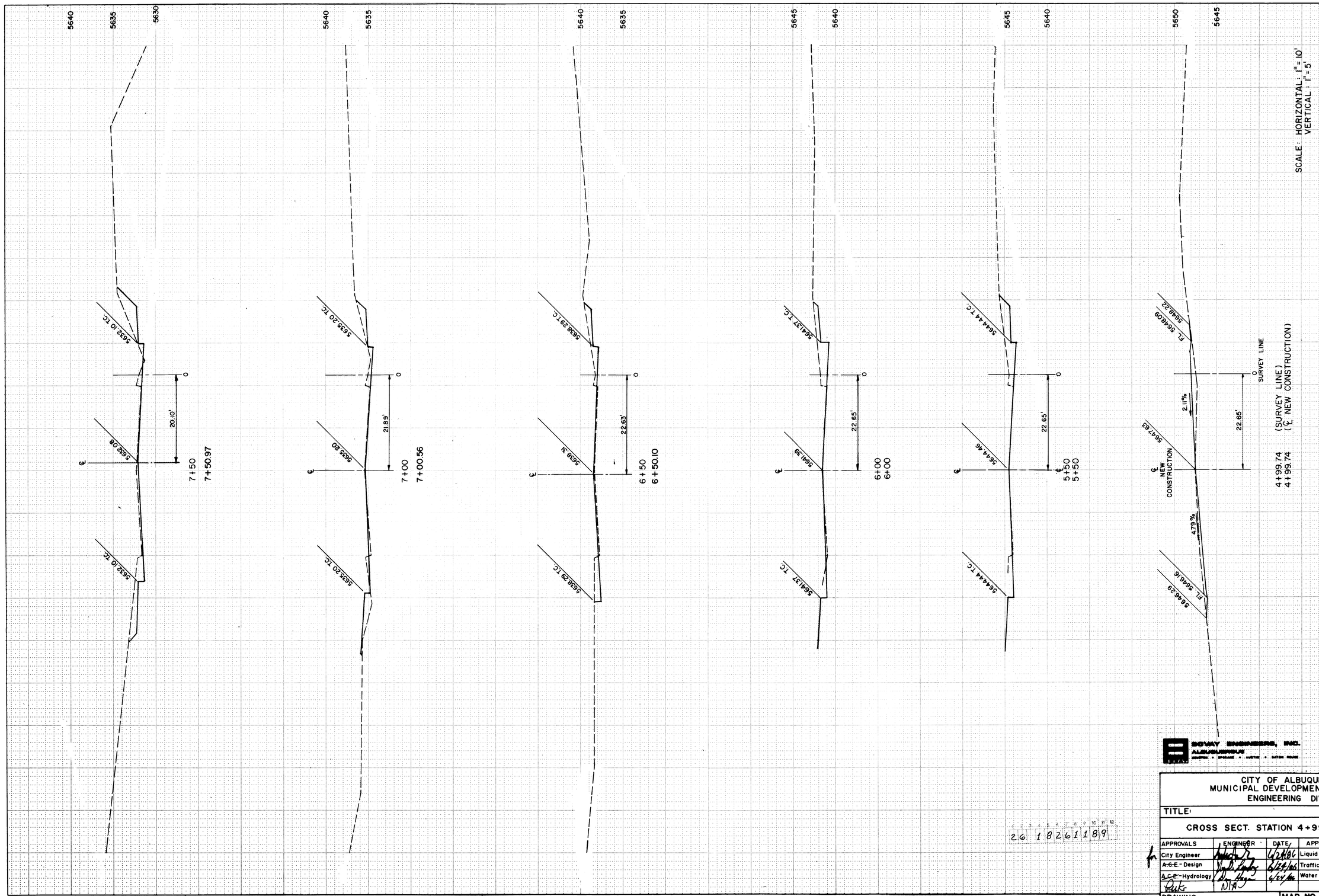

FOUR HILLS RD.

AS BUILT INFORMATION	
CONTRACTOR	
WORK STAKED BY	DATE
INSPECTOR'S ACCEPTANCE BY	DATE
FIELD VERIFICATION BY	DATE
DRAWINGS CORRECTED BY	DATE
MICRO-FILM INFORMATION	
RECORDED BY	DATE
NO.	

BENCH MARKS

SURVEY INFORMATION

FIELD NOTES

NO.	BY	DATE

ENGINEER'S SEAL

WILLIAMS, WALTER M. (NMEX) 7309 REGISTERED PROFESSIONAL ENGINEER

JUL 11 1986

NO.	DATE	REMARKS	BY

REVISIONS

DESIGN

DESIGNED BY	SAM	DATE MAY, 1985.
DRAWN BY	JLB	DATE MAY, 1985.
CHECKED BY		DATE

CITY OF ALBUQUERQUE
MUNICIPAL DEVELOPMENT DEPARTMENT
ENGINEERING DIVISION

TITLE:

CROSS SECT. STATION 4+99.74 TO 7+50

APPROVALS	ENGINEER	DATE	APPROVALS	ENGINEER	DATE
City Engineer		6/24/86	Liquid Waste	N.A.	6/11/86
~~A.C.E.~~ - Design		6/24/86	Traffic	N.A.	6/24/86
~~A.C.E.~~ - Hydrology		6/24/86	Water	N.A.	6/11/86
	N/A				

DRAWING NO.	MAP NO.	SHEET	OF
1826	L-23-Z	C11	39

FOUR HILLS RD.

SURVEY INFORMATION		
FIELD NOTES		
NO.	BY	DATE

BENCH MARKS

AS BUILT INFORMATION	
CONTRACTOR	
WORK STAKED BY	DATE
INSPECTOR'S ACCEPTANCE BY	DATE
FIELD VERIFICATION BY	DATE
DRAWINGS CORRECTED BY	DATE
MICRO-FILM INFORMATION	
RECORDED BY	DATE
NO.	

ENGINEER'S SEAL

JUL 7, 1985

NO.	DATE	REMARKS	BY

REVISIONS

DESIGN		
DESIGNED BY	SAM	DATE MAY, 1985
DRAWN BY	JLB	DATE MAY, 1985
CHECKED BY		DATE

CITY OF ALBUQUERQUE
MUNICIPAL DEVELOPMENT DEPARTMENT
ENGINEERING DIVISION

TITLE:

CROSS SECT. STATION 8+00 TO 10+00

APPROVALS	ENGINEER	DATE	APPROVALS	ENGINEER	DATE
City Engineer		6/24/86	Liquid Waste	N.A.	4/11/86
~~A.C.E.~~ - Design		6/24/86	Traffic	N.A.	4/24/86
~~A.C.E.~~ - Hydrology		6/24/86	Water	N.A.	4/11/86
	N/A				

DRAWING NO.	MAP NO.	SHEET	OF
1826	L-23-Z	C12	39

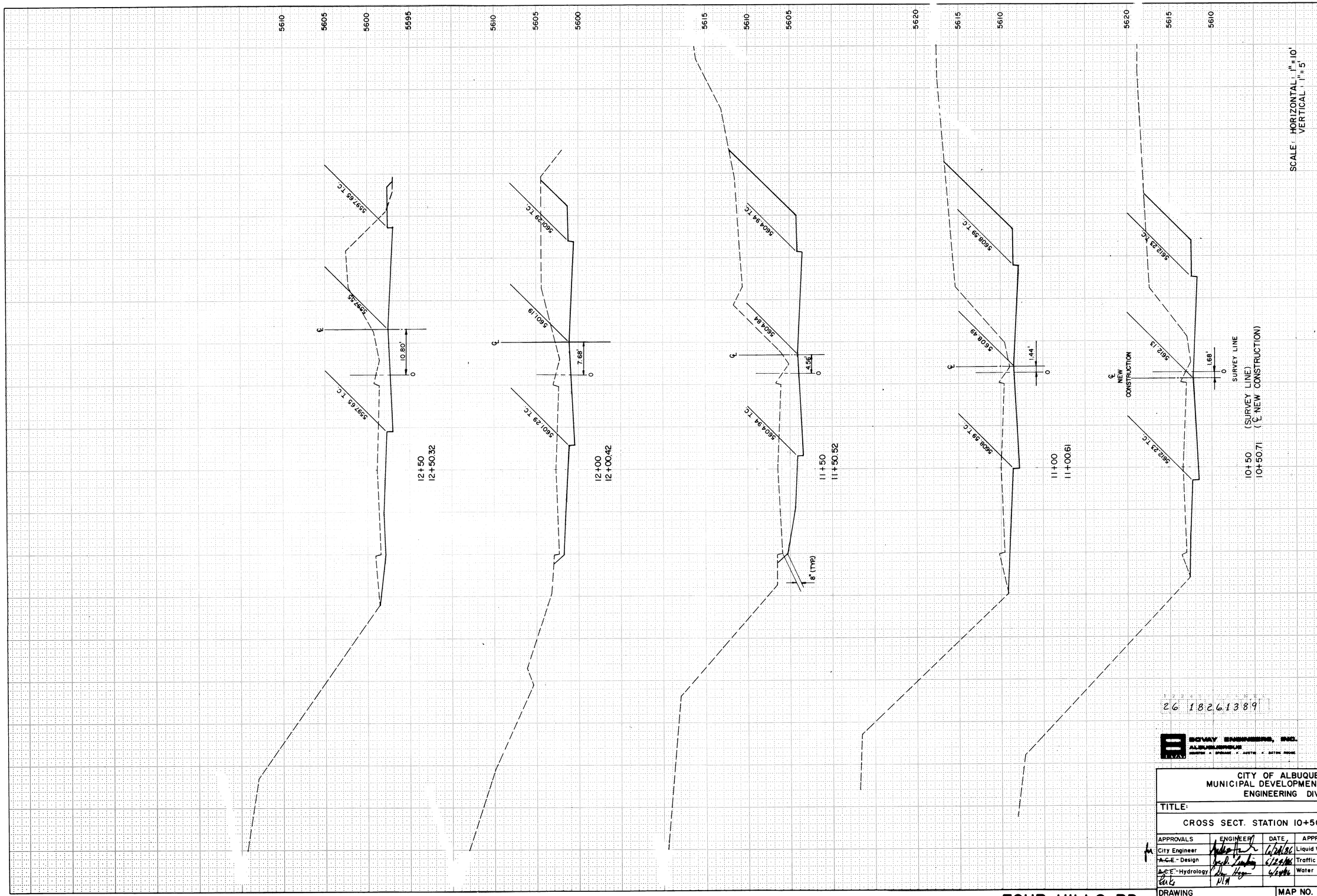

FOUR HILLS RD.

AS BUILT INFORMATION	
CONTRACTOR	
WORK STAKED BY	DATE
INSPECTOR	
ACCEPTANCE BY	DATE
FIELD VERIFICATION BY	DATE
DRAWINGS CORRECTED BY	DATE
MICRO-FILM INFORMATION	
RECORDED BY	DATE
NO.	

BENCH MARKS

SURVEY INFORMATION

FIELD NOTES

NO.	BY	DATE

ENGINEER'S SEAL

JUL 7, 1986

NO.	DATE	REMARKS	BY

REVISIONS

DESIGN

		DATE
DESIGNED BY	SAM	MAY, 1985
DRAWN BY	JLB	MAY, 1985
CHECKED BY		DATE

CITY OF ALBUQUERQUE
MUNICIPAL DEVELOPMENT DEPARTMENT
ENGINEERING DIVISION

TITLE:

CROSS SECT. STATION 10+50 TO 12+50

APPROVALS	ENGINEER	DATE	APPROVALS	ENGINEER	DATE
City Engineer		6/26/86	Liquid Waste	N.A.	4/11/86
~~A.C.E.~~ - Design		6/26/86	Traffic	N.A.	6/26/86
~~A.C.E.~~ - Hydrology		6/26/86	Water	N.A.	4/11/86
Parks	N.A.				

DRAWING NO.	MAP NO.	SHEET	OF
1826	L-23-Z	C13	39

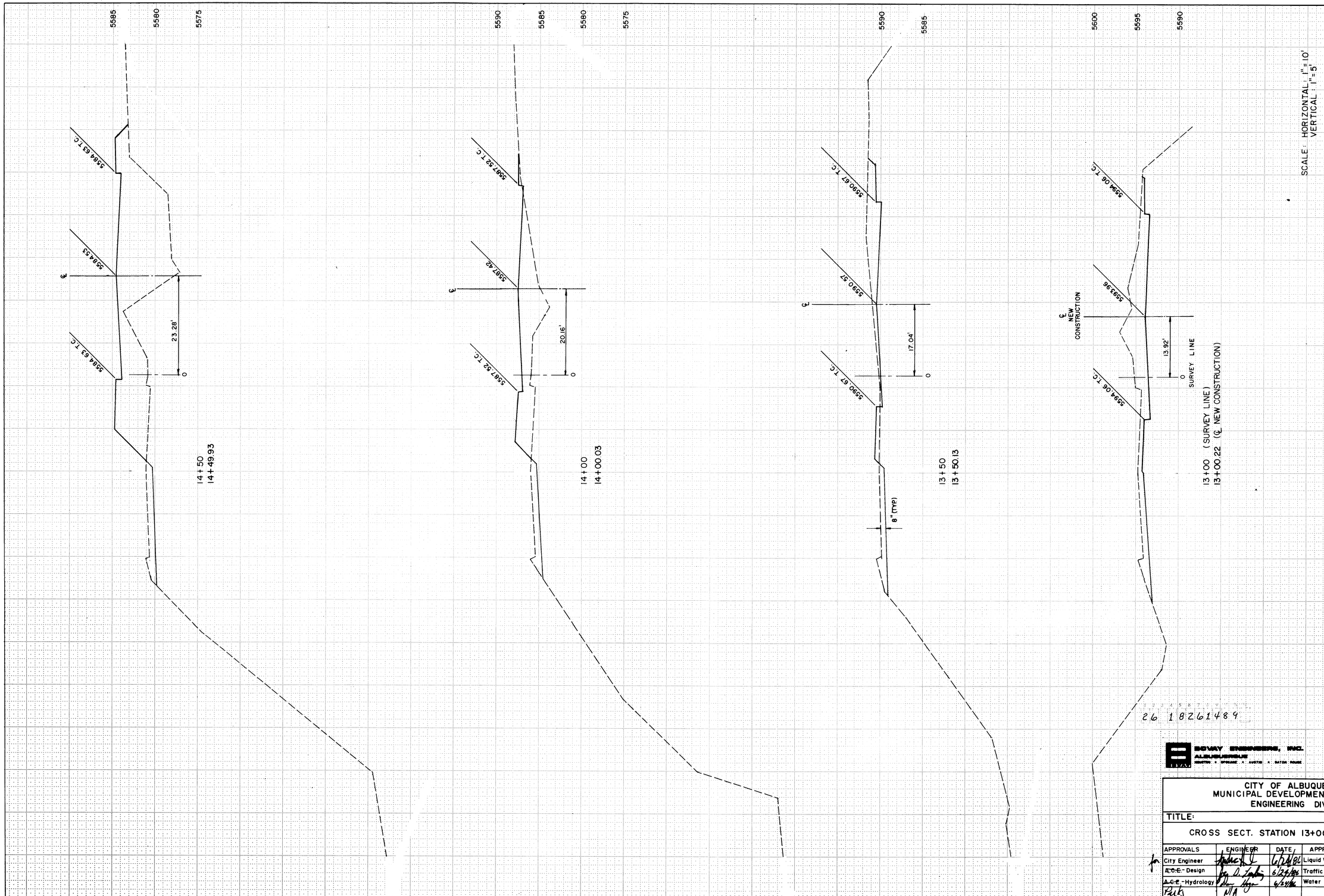

BOWAY ENGINEERS, INC.
ALBUQUERQUE
HOUSTON • SPOKANE • AUSTIN • BATON ROUGE

NO.	DATE	REMARKS	BY
		REVISIONS	

DESIGN

DESIGNED BY	SAM	DATE MAY, 1985
DRAWN BY	JLB	DATE MAY, 1985
CHECKED BY		DATE

AS BUILT INFORMATION

CONTRACTOR
WORK STAKED BY — DATE
INSPECTORS
ACCEPTANCE BY — DATE
FIELD VERIFICATION BY — DATE
DRAWINGS CORRECTED BY — DATE
MICRO-FILM INFORMATION
RECORDED BY — DATE
NO.

BENCH MARKS

SURVEY INFORMATION

NO.	FIELD NOTES BY	DATE

ENGINEER'S SEAL

JUL 11, 1985

CITY OF ALBUQUERQUE
MUNICIPAL DEVELOPMENT DEPARTMENT
ENGINEERING DIVISION

TITLE:

CROSS SECT. STATION 13+00 TO 14+50

APPROVALS	ENGINEER	DATE	APPROVALS	ENGINEER	DATE
City Engineer		6/24/85	Liquid Waste	N.A.	6/11/85
~~A.C.E.~~ - Design		6/24/85	Traffic	N.A.	6/24/85
~~A.C.E.~~ - Hydrology		6/24/85	Water	N.A.	6/11/85
Parks	N/A				

DRAWING NO.	MAP NO.	SHEET	OF
1826	L-23-Z	C14	39

N24361

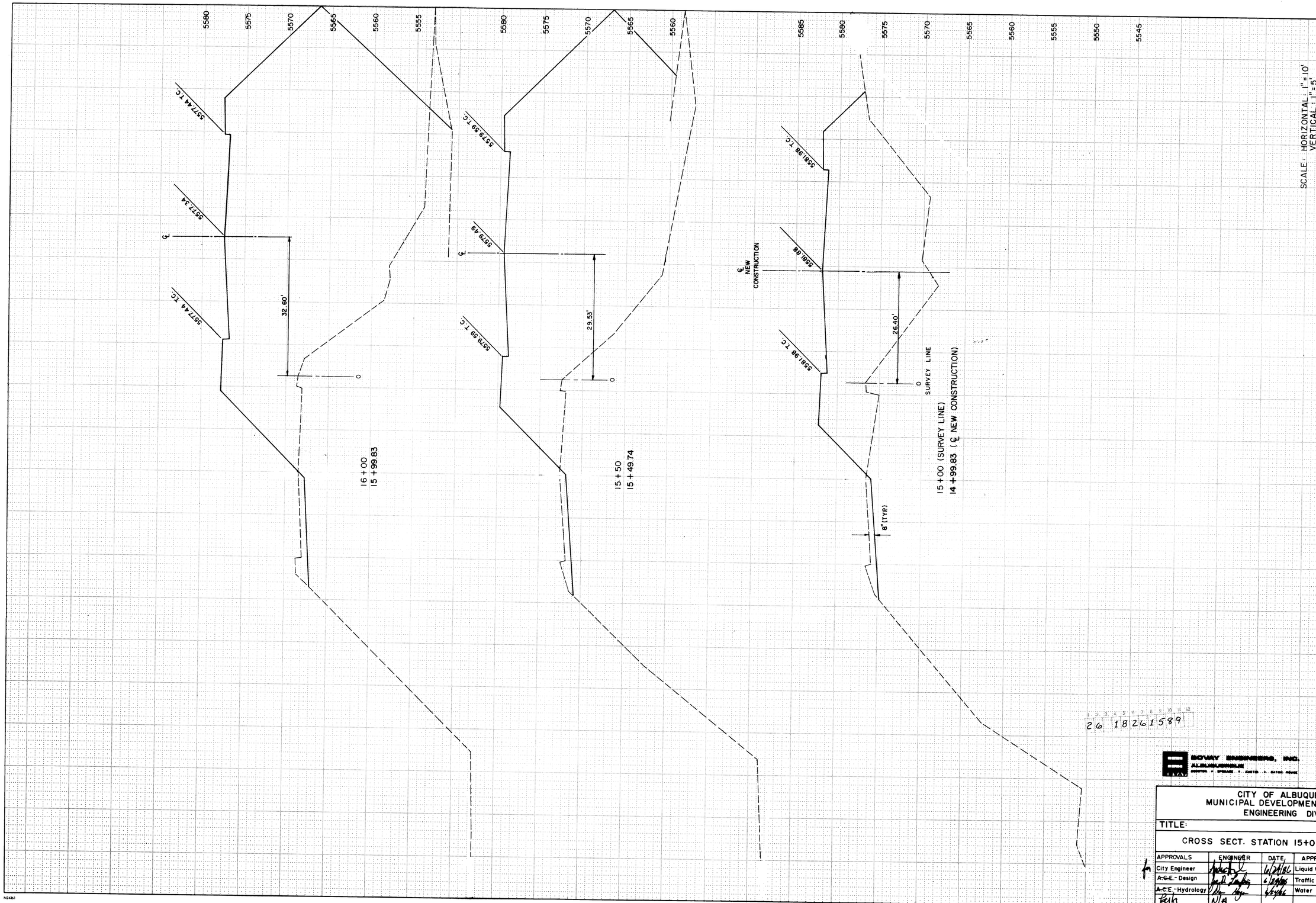

SURVEY INFORMATION

FIELD NOTES

NO.	BY	DATE

BENCH MARKS

AS BUILT INFORMATION

CONTRACTOR
WORK STAKED BY
INSPECTORS
ACCEPTANCE BY
INITIAL
VERIFICATION BY
DRAWINGS CORRECTED BY
MICRO-FILM INFORMATION
RECORDED BY
NO.

DATE
DATE
DATE
DATE
DATE
DATE

ENGINEER'S SEAL

JUL 11, 1985

NO.	DATE	REMARKS	BY

REVISIONS

DESIGN

DESIGNED BY SAM DATE MAY, 1985
DRAWN BY JLB DATE MAY, 1985.
CHECKED BY DATE

BOWAY ENGINEERING, INC.
ALBUQUERQUE
BOSTON • DENVER • AUSTIN • SAN JOSE

CITY OF ALBUQUERQUE
MUNICIPAL DEVELOPMENT DEPARTMENT
ENGINEERING DIVISION

TITLE:

CROSS SECT. STATION 15+00 TO 16+00

APPROVALS	ENGINEER	DATE	APPROVALS	ENGINEER	DATE
City Engineer		6/24/86	Liquid Waste	N.A.	9/11/86
A.C.E.-Design		6/24/86	Traffic	N.A.	6/24/86
A.C.E.-Hydrology	N/A	6/24/86	Water	N.A.	9/11/86

DRAWING NO.	MAP NO.	SHEET	OF
1826	L-23-Z	C15	39

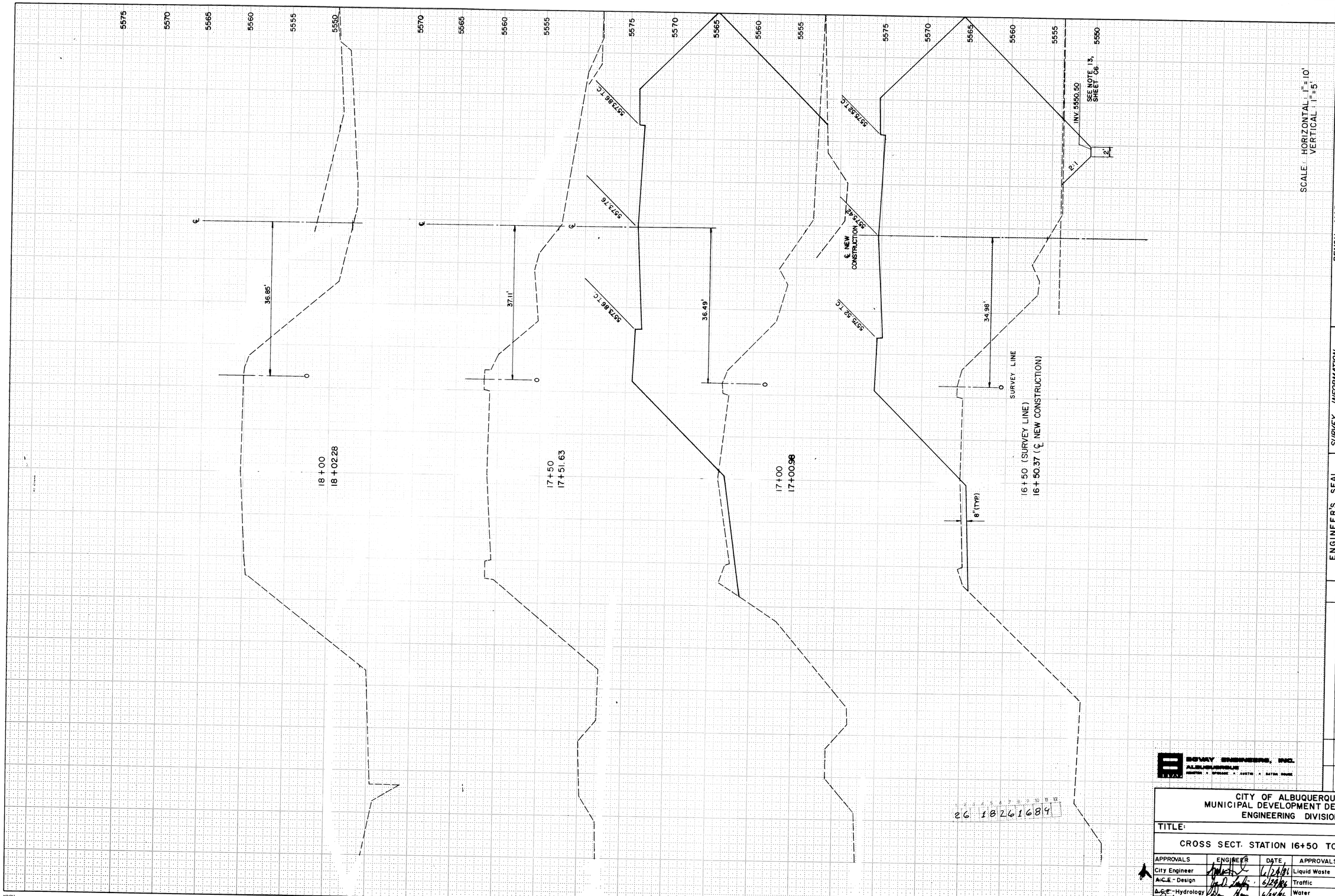

SURVEY INFORMATION			BENCH MARKS	AS BUILT INFORMATION
FIELD NOTES				CONTRACTOR
NO.	BY	DATE		WORK STAKED BY
				INSPECTORS ACCEPTANCE BY
				FIELD VERIFICATION BY
				DRAWINGS CORRECTED BY
				MICRO-FILM INFORMATION
				RECORDED BY
				NO.

ENGINEER'S SEAL

JUL 11, 1986

NO.	DATE	REMARKS	BY
		REVISIONS	

DESIGN

DESIGNED BY	SAM	DATE	MAY, 1985
DRAWN BY	JLB	DATE	MAY, 1985
CHECKED BY		DATE	

BOWAY ENGINEERS, INC.
ALBUQUERQUE
HOUSTON • SPOKANE • AUSTIN • BATON ROUGE

CITY OF ALBUQUERQUE
MUNICIPAL DEVELOPMENT DEPARTMENT
ENGINEERING DIVISION

TITLE:

CROSS SECT. STATION 16+50 TO 18+00

APPROVALS	ENGINEER	DATE	APPROVALS	ENGINEER	DATE
City Engineer		6/24/86	Liquid Waste	N.A.	4/11/86
A.C.E.-Design		6/24/86	Traffic	N/A	6/24/86
A.C.E.-Hydrology		6/24/86	Water	N.A.	4/11/86
Parks	N/A				

DRAWING NO.	MAP NO.	SHEET	OF
1826	L-23-Z	C16	39

FOUR HILLS RD.

26 18 26 16 89

FOUR HILLS RD.

N2436I

SOVAY ENGINEERS, INC.
ALBUQUERQUE
HOUSTON • SPOKANE • AUSTIN • BATON ROUGE

NO.	DATE	REMARKS	BY
		REVISIONS	

DESIGN
DESIGNED BY SAM DATE MAY, 1985
DRAWN BY JLB DATE MAY, 1985
CHECKED BY DATE

CITY OF ALBUQUERQUE
MUNICIPAL DEVELOPMENT DEPARTMENT
ENGINEERING DIVISION

TITLE:

CROSS SECT. STATION 18+50 TO 20+00

APPROVALS	ENGINEER	DATE	APPROVALS	ENGINEER	DATE
City Engineer		6/24/86	Liquid Waste	N.A. Rivera	4/11/86
~~A.C.E.~~ - Design		6/24/86	Traffic	N.A. Daily	4/24/86
~~A.C.E.~~ - Hydrology		6/24/86	Water	N.A. Rivera	4/11/86
Parks	N.A.				

DRAWING NO.	MAP NO.	SHEET	OF
1826	L-23-Z	C17	39

SURVEY INFORMATION
FIELD NOTES

NO.	BY	DATE

BENCH MARKS

AS BUILT INFORMATION
CONTRACTOR
WORK STAKED BY
INSPECTOR'S ACCEPTANCE BY DATE
FIELD VERIFICATION BY DATE
DRAWINGS CORRECTED BY DATE
MICRO-FILM INFORMATION
RECORDED BY DATE
NO.

ENGINEER'S SEAL
JUL 11, 1986

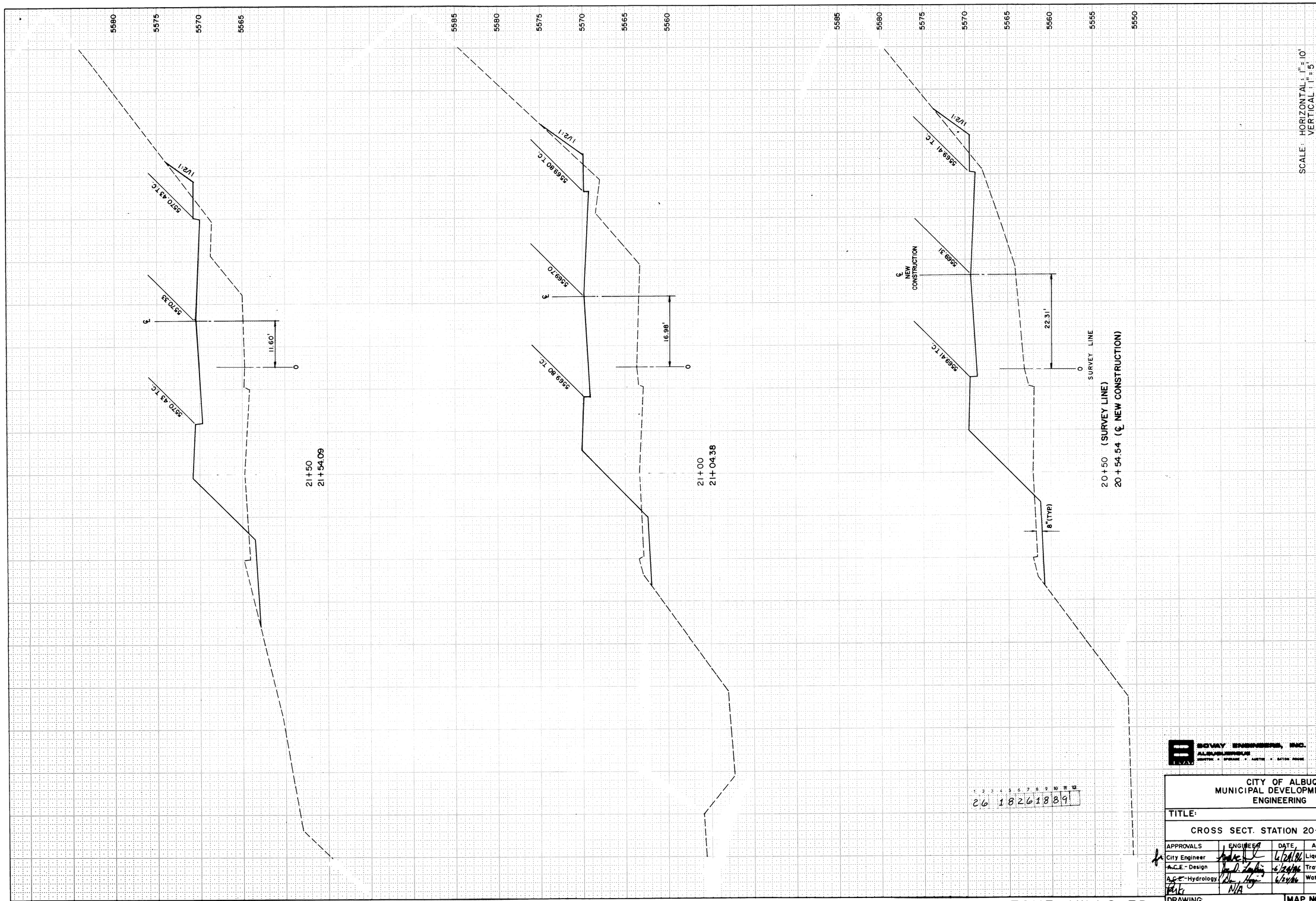

FOUR HILLS RD.

26 1826 1889

SURVEY INFORMATION			
FIELD NOTES			
NO.	BY	DATE	

BENCH MARKS

AS BUILT INFORMATION	
CONTRACTOR	
WORK STAKED BY	DATE
INSPECTORS ACCEPTANCE BY	DATE
FIELD VERIFICATION BY	DATE
DRAWINGS CORRECTED BY	DATE
MICRO-FILM INFORMATION	
RECORDED BY	DATE
NO.	

ENGINEER'S SEAL

JUL 11, 1986

NO.	DATE	REMARKS	BY
REVISIONS			

DESIGN

DESIGNED BY	SAM	DATE MAY, 1985
DRAWN BY	JLB	DATE MAY, 1985
CHECKED BY		DATE

BOWAY ENGINEERS, INC.
ALBUQUERQUE
HOUSTON • DENVER • AUSTIN • BATON ROUGE

CITY OF ALBUQUERQUE
MUNICIPAL DEVELOPMENT DEPARTMENT
ENGINEERING DIVISION

TITLE:

CROSS SECT. STATION 20+50 TO 21+50

APPROVALS	ENGINEER	DATE	APPROVALS	ENGINEER	DATE
City Engineer		6/24/86	Liquid Waste	N.A. Rhodes	4/11/86
A.C.E.-Design		6/24/86	Traffic	N/A	6/24/86
A.C.E.-Hydrology		6/24/86	Water	N.A. Rhodes	4/11/86
Parks	N/A				

DRAWING NO.	MAP NO.	SHEET	OF
1826	L-23-Z	C18	39

SCALE: HORIZONTAL: 1" = 10'
VERTICAL: 1" = 5'

26 1826 1989

N24361

FOUR HILLS RD.

SCHAY ENGINEERS, INC.
ALBUQUERQUE
HOUSTON · SPOKANE · AUSTIN · BATON ROUGE

NO.	DATE	REMARKS	BY

REVISIONS

DESIGN

DESIGNED BY SAM DATE MAY, 1985
DRAWN BY JLB DATE MAY, 1985
CHECKED BY DATE

AS BUILT INFORMATION

CONTRACTOR
WORK STAKED BY DATE
INSPECTORS
ACCEPTANCE BY DATE
FIELD VERIFICATION BY DATE
DRAWINGS CORRECTED BY DATE
MICRO-FILM INFORMATION
RECORDED BY DATE
NO.

BENCH MARKS

SURVEY INFORMATION
FIELD NOTES

NO.	BY	DATE

ENGINEER'S SEAL

JUL 11, 1986

CITY OF ALBUQUERQUE
MUNICIPAL DEVELOPMENT DEPARTMENT
ENGINEERING DIVISION

TITLE:

CROSS SECT. STATION 22+00 TO 23+00

APPROVALS	ENGINEER	DATE	APPROVALS	ENGINEER	DATE
City Engineer		6/24/86	Liquid Waste	N.A. Khan	6/11/86
~~A.C.E.~~ - Design		6/24/86	Traffic	N.A. D.N.H.	6/24/86
~~A.C.E.~~ - Hydrology		6/24/86	Water	N.A. Khan	6/11/86
Parks	N/A				

DRAWING NO. 1826 | MAP NO. L-23-Z | SHEET C19 OF 39

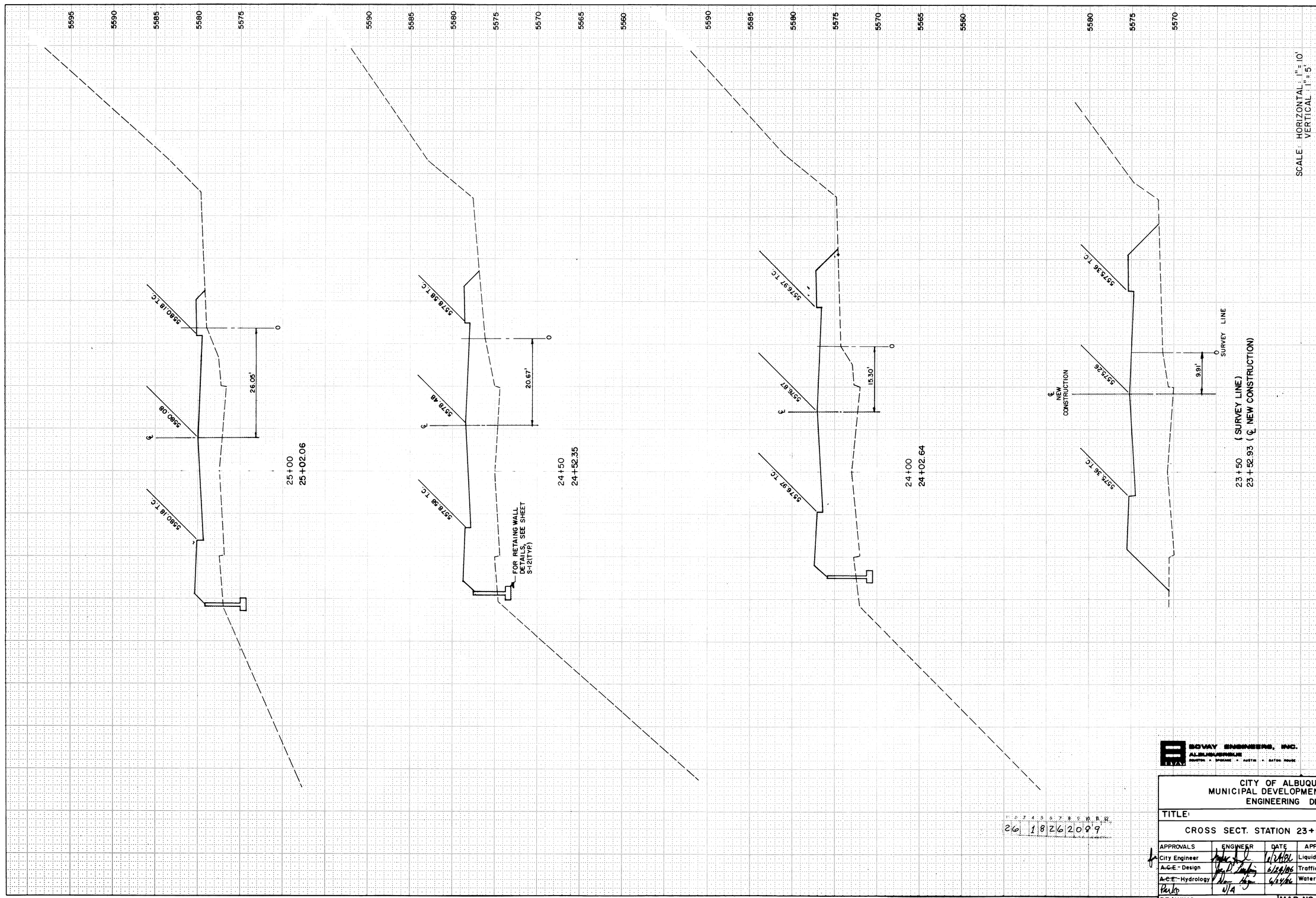

SCALE: HORIZONTAL: 1" = 10'
VERTICAL: 1" = 5'

26 1 8 2 6 2 0 9 9

FOUR HILLS RD.

BOVAY ENGINEERS, INC.
ALBUQUERQUE
BOSTON • SPOKANE • AUSTIN • BATON ROUGE

NO.	DATE	REMARKS	BY
		REVISIONS	

DESIGN

DESIGNED BY SAM DATE MAY, 1985.
DRAWN BY JLB DATE MAY, 1985.
CHECKED BY DATE

AS BUILT INFORMATION

CONTRACTOR
WORK STAKED BY
INSPECTOR'S ACCEPTANCE BY DATE
FIELD VERIFICATION BY DATE
DRAWINGS CORRECTED BY DATE
MICRO-FILM INFORMATION
RECORDED BY DATE
NO.

BENCH MARKS

SURVEY INFORMATION
FIELD NOTES

NO.	BY	DATE

ENGINEER'S SEAL

JUL 11, 1986

CITY OF ALBUQUERQUE
MUNICIPAL DEVELOPMENT DEPARTMENT
ENGINEERING DIVISION

TITLE:

CROSS SECT. STATION 23+50 TO 25+00

APPROVALS	ENGINEER	DATE	APPROVALS	ENGINEER	DATE
City Engineer		6/24/86	Liquid Waste	N.A.	6/11/86
~~A.C.E.~~ - Design		6/24/86	Traffic	N.A.	6/24/86
~~A.C.E.~~ - Hydrology		6/24/86	Water	N.A.	6/11/86
	N/A				

DRAWING NO.	MAP NO.	SHEET	OF
1826	L-23-Z	C20	39

N24361

FOUR HILLS RD.

N2436I

AS BUILT INFORMATION	
CONTRACTOR	
WORK STAKED BY	DATE
INSPECTOR'S ACCEPTANCE BY	DATE
FIELD VERIFICATION BY	DATE
DRAWINGS CORRECTED BY	DATE
MICRO-FILM INFORMATION	
RECORDED BY	DATE
NO.	

BENCH MARKS

SURVEY INFORMATION

FIELD NOTES		
NO.	BY	DATE

ENGINEER'S SEAL

JULY 11, 1986

NO.	DATE	REMARKS	BY

REVISIONS

DESIGN		
DESIGNED BY	SAM	DATE MAY 1985
DRAWN BY	JLB	DATE MAY 1985
CHECKED BY		DATE

BOWAY ENGINEERING, INC.
ALBUQUERQUE
SEATTLE • SPOKANE • AUSTIN • BATON ROUGE

CITY OF ALBUQUERQUE
MUNICIPAL DEVELOPMENT DEPARTMENT
ENGINEERING DIVISION

TITLE:

CROSS SECT. STATION 25+50 TO 27+00

APPROVALS	ENGINEER	DATE	APPROVALS	ENGINEER	DATE
City Engineer		6/26/86	Liquid Waste	N.A. Rhoan	6/11/86
A.C.E.-Design		6/24/86	Traffic	N.A. Duff	6/24/86
A.C.E.-Hydrology	N/A	6/24/86	Water	N.A. Rhoan	6/11/86

DRAWING NO.	MAP NO.	SHEET	OF
1826	L-23-Z	C21	39

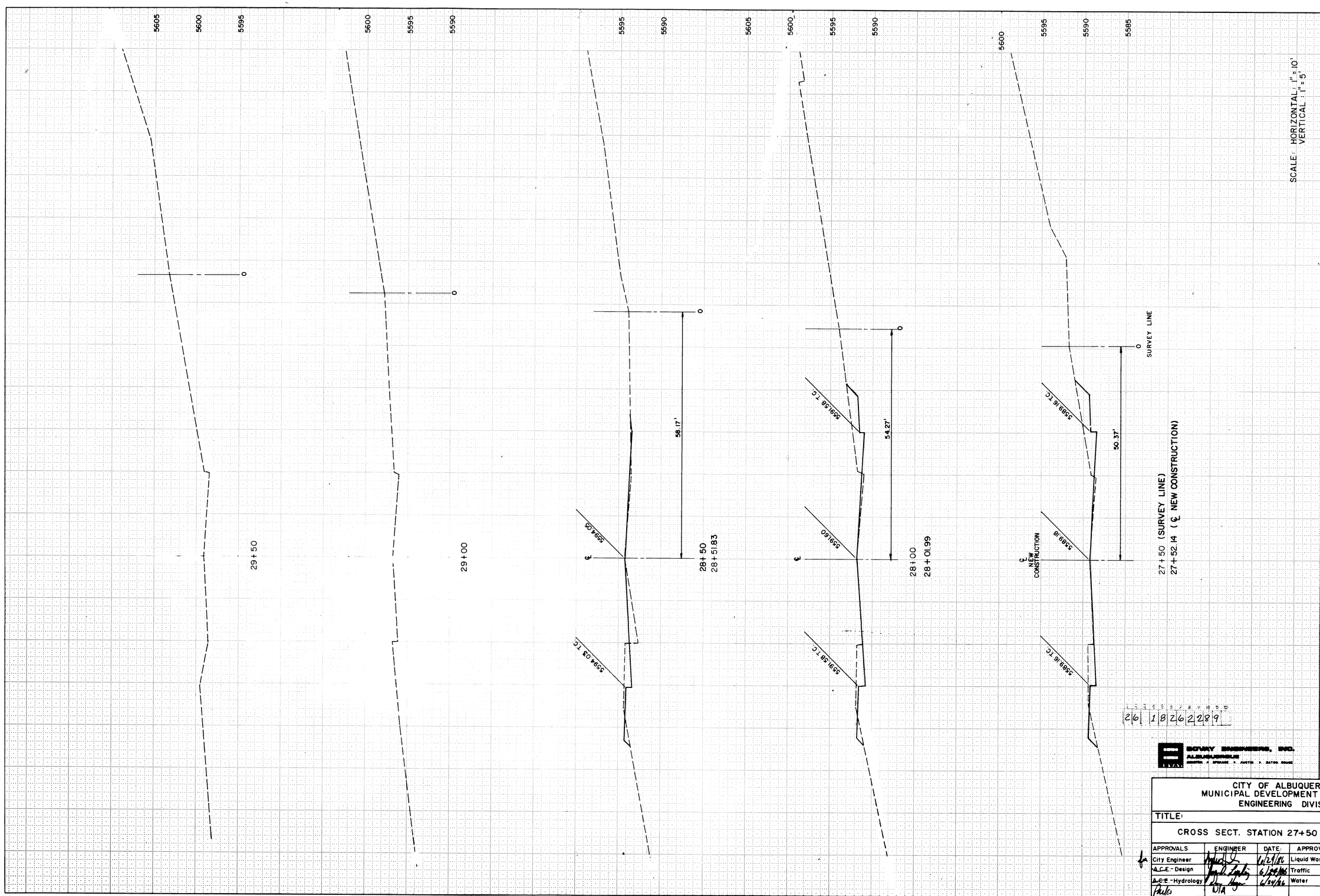

26	1	8	2	6	2	2	8	9

SCHAY ENGINEERS, INC.
ALBUQUERQUE
ABERDEEN • SPOKANE • AUSTIN • BATON ROUGE

AS BUILT INFORMATION

CONTRACTOR
WORK STAKED BY — DATE
INSPECTOR'S ACCEPTANCE BY — DATE
FIELD VERIFICATION BY — DATE
DRAWINGS CORRECTED BY — DATE
MICRO-FILM INFORMATION
RECORDED BY — DATE
NO.

BENCH MARKS

SURVEY INFORMATION

FIELD NOTES

NO.	BY	DATE

ENGINEER'S SEAL

JUL 11, 1985

NO.	DATE	REMARKS	BY

REVISIONS

DESIGN

DESIGNED BY SAM — DATE MAY, 1985.
DRAWN BY JLB — DATE MAY, 1985.
CHECKED BY — DATE

CITY OF ALBUQUERQUE
MUNICIPAL DEVELOPMENT DEPARTMENT
ENGINEERING DIVISION

TITLE:

CROSS SECT. STATION 27+50 TO 29+50

APPROVALS	ENGINEER	DATE	APPROVALS	ENGINEER	DATE
City Engineer		6/27/86	Liquid Waste	N.A. Baca	6/11/86
A.C.E.-Design		6/24/86	Traffic	J.A. Duffy	6/12/86
A.C.E.-Hydrology		6/24/86	Water	N.A. Baca	6/11/86
Parks	J.A.				

DRAWING NO.	MAP NO.	SHEET	OF
1826	L-23-Z	C22	39

FOUR HILLS RD.

N24361

GENERAL NOTES:

UNLESS OTHERWISE NOTED THE FOLLOWING NOTES APPLY

1. WORKMANSHIP AND MATERIALS SHALL CONFORM TO THE CITY OF ALBUQUERQUE INTERIM STANDARD SPECIFICATIONS FOR PUBLIC WORKS CONSTRUCTION 1985 EDITION, AND THE SUPPLEMENTAL TECHNICAL SPECIFICATIONS.

2. CHAMFER ALL EXPOSED EDGES OF CONCRETE 3/4 INCH.

3. REINFORCING BARS SHALL CONFORM TO ASTM A615 GRADE 60 DIMENSIONS REFER TO CENTERLINE OF BAR. SOME EPOXY-COATED REINFORCING BARS ARE DETAILED OVER 40 FEET LONG. THE CONTRACTOR MAY FURNISH SUCH LONGER BARS IN TWO SECTONS WITH LAP SPLICES. THE LOCATION AND LENGTH OF LAPS MUST BE SUBMITTED IN WRITING FOR APPROVAL TO THE ENGINEER. ALLOW AT LEAST TWO WEEKS FOR REVIEW PRIOR TO FABRICATION. ADDITIONAL BAR LENGTHS REQUIRED BY THE CONTRACTOR'S PROPOSAL WILL BE AT NO COST TO THE OWNER.

4. POLYSTYRENE SHALL CONFORM TO AASHTO M 230.

5. JOINT SEALANTS SHALL BE OF A POLYURETHANE TYPE SUITABLE FOR BRIDGES AND CHANNELS. SUBMIT TO THE ENGINEER FOR REVIEW. SEE SECTION 107. OF THE STANDARD SPECIFICATIONS.

6. STRUCTURAL STEEL SHALL CONFORM TO AASHTO M183. AFTER FABRICATION SOLE PLATES SHALL BE STRAIGHTENED OR SHALL BE FINISHED TOP AND BOTTOM. THE THICKNESS SHOWN ON THE PLANS SHALL BE THE FINISHED THICKNESS.

7. ALL STRUCTURAL STEEL SHALL RECEIVE A PRIME COAT OF RED LEAD, AND TWO FIELD COATS OF ALUMINUM PAINT. SEE SECTION 157 OF THE STANDARD SPECIFICATIONS. ALL SURFACES EXPOSED TO WEATHER SHALL BE PAINTED.

8. FOUNDATION DATA SHOWN ON S-3 ARE FOR DESIGNERS ONLY. THE OWNER IS NOT RESPONSIBLE FOR ANY INTERPRETATION OR ASSUMPTIONS MADE BY CONTRACTORS BASED ON THIS INFORMATION.

9. CORED AND OPEN HOLES IN EXTERIOR BEAMS SHALL BE PACKED WITH GROUT.

10. ANCHOR BOLTS SHALL BE PLACED IN DRILLED HOLES AND GROUTED IN THE EXACT POSITION SHOWN ON THE PLANS. SEE PIER NOTES ON S-11 FOR ALTERNATE METHOD OF PLACEMENT.

11. AFTER COMPLETION OF THE BRIDGE AND APPROACH ROADWAYS, THE TOP SURFACES OF ALL BRIDGE SEATS SHALL BE THOROUGHLY CLEANED OF ALL DIRT, CONCRETE AND DEBRIS.

12. SHOP DRAWINGS SHALL BE SUBMITTED TO THE ENGINEER FOR REVIEW FOR THE FOLLOWING ITEMS:
    1. REINFORCING BAR PLACEMENT
    2. ALL STRUCTURAL STEEL INCLUDING PILE SPLICES
    3. TFE BEARING DEVICES
    4. SEALANTS
    5. PILE TIPS
    6. ELASTOMERIC EXPANSION JOINT SEAL
    7. CHAIN LINK FENCE

13. CERTIFICATES OF COMPLIANCE SHALL BE SUBMITTED FOR THE FOLLOWING ITEMS:
    1. ELASTOMERIC BEARING PADS
    2. EPOXY COATED RE-BARS
    3. TFE BEARING DEVICES
    4. THREADED INSERTS
    5. WATER REPELLANT TREATMENT

14. THE CONTRACTOR IS RESPONSIBLE FOR PROVIDING ADEQUATE TEMPORARY BRACING FOR THE PRESTRESSED GIRDERS UNTIL THE PERMANENT BRACING IS SECURED IN PLACE. MINIMUM PERMANENT BRACING IS CONSIDERED TO BE THE WELDS @ THE TFE BEARINGS AND THE ABUTMENT BACKWALL/DIAPHRAGMS WITH TIE ROD FULLY SECURED.

15. DIAPHRAGMS MAY BE PLACED PRIOR TO THE DECK PLACEMENT PROVIDED THAT NO INTERIOR DIAPHRAGM CONCRETE IS PLACED BEYOND THE PERMISSIBLE LONGITUDINAL CONSTRUCTION JOINT IN THE DECK FOR THAT DECK POUR. SEE DECK PLACEMENT SEQUENCE. NOS. ①&③ REFER TO THE DIAPHRAGMS. PLACE CONCRETE IN THE NUMBERICAL SEQUENCE SHOW. SPAN 1 IS SIMILAR TO SPAN 2. ALTERNATE SEQUENCES MAY BE APPROVED BY THE ENGINEER.

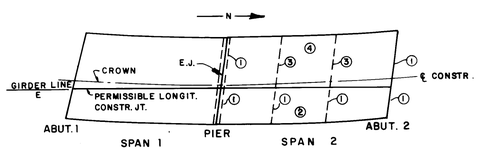

DECK & DIAPHRAGM PLACEMENT SEQUENCE

16. THE TOP OF THE EXPANSION JOINT SHALL BE LOCATED BETWEEN 1/4 INCH & 1/8 INCH BELOW THE TOP OF THE CONCRETE BRIDGE DECK TO PREVENT DISLOCATION BY SNOW PLOWING EQUIPMENT.

DESIGN DATA

DESIGN IS IN ACCORDANCE WITH AASHTO SPECIFICATIONS DATED 1983 - 13TH EDITION.

REINFORCED CONCRETE:
SUPERSTRUCTURE - F'_c = 4000 PSI @ 28 DAYS
SUBSTRUCTURE AND OTHER - F'_c = 3000 PSI @ 28 DAYS
REINFORCING BARS - F_y = 60,000 PSI

PRESTRESSED CONCRETE:
F'_c = 5,500 PSI @ 28 DAYS
SEE SHEET S-7

STRUCTURAL STEEL:
F'_s = 20,000 PSI
F_y = 36,000 PSI

LIVE LOAD: HS 20-44

WEARING SURFACE: ¼" MONOLITHIC CONCRETE PLUS 30 PSF ALLOWANCE FOR FUTURE OVERLAY

HORIZONTAL EARTH PRESSURE: (EQUIVALENT FLUID)
AT REST 54.6 PCF
ACTIVE 42.9 PCF

WIND VELOCITY: 90 MPH

SEISMIC: ZONE 2

DEPTH OF ALLUVIUM TO BEDROCK: 46' @ ABUTMENTS

TEMPERATURE RANGE: 80°F

ABBREVIATIONS

A.B.	ANCHOR BOLT
ABUT.	ABUTMENT
B.F.	BACK FACE
BRG.	BEARING
CONC.	CONCRETE
CONN.	CONNECTION
E.F.	EACH FACE
E.J.	EXPANSION JOINT
EQ	EQUAL
F.F.	FRONT FACE
H.S.A.	HEADED STUD ANCHOR
LONGIT.	LONGITUDINAL
NOM.	NOMINAL
SIM.	SIMILAR
SPA.	SPACING
T.F.E.	TEFLON SLIDING BEARING
U.N.O.	UNLESS NOTED OTHERWISE

ESTIMATED QUANTITIES

ITEM NO.	ITEM	UNIT	SUPERSTR. SPAN 1	SUPERSTR. SPAN 2	SUBSTRUCTURE ABUT. 1	SUBSTRUCTURE PIER	SUBSTRUCTURE ABUT. 2	RET. WALL & CHAN. MISC.	TOTAL QTY.
B-1	REINFORCING BARS, GRADE 40	LB.			328		328		656
B-2	REINFORCING BARS, GRADE 60	LB.	23,144	23,237	6,642	6368	6,637	7,741	73,769
B-3	EPOXY COATED REINFORCING BARS, GRADE 60	LB.	17,360	17,453					34,813
B-4	STRUCTURAL STEEL PILING HP 10 X 57	L.F.			995		739		1,734
B-5	STRUCTURAL STEEL PILING HP 12 X 74	L.F.				1085			1,085
B-6	PRESTRESSED CONCRETE BRIDGE GIRDER, TYPE 54	L.F.	712	712					1,424
B-7	STRUCTURAL STEEL FOR CONCRETE BRIDGES, AASHTO M183	LB.	4,358	4,358	480	538	480		10,214
B-8	SUPERSTRUCTURE CONCRETE, F'_c = 4000 PSI	C.Y.	231.85	231.90					463.75
B-9	SUBSTRUCTURE CONCRETE F'_c = 3000 PSI	C.Y.			51.05	73.60	51.00	147.7	323.35
B-10	PENETRATING WATER REPELLANT TREATMENT	S.Y.	83	83		74			240
B-11	ELASTOMERIC EXPANSION JOINT SEAL	L.F.							68
B-12	TFE BEAM BEARING DEVICES	EA.				16			16
B-13	8' CHAIN LINK FENCE	S.F.	1,543	1,543					3,086
B-14	CONCRETE WALL BARRIER-BRIDGE	L.F.	223	223					446
B-15	STRUCTURE EXCAVATION, BACKFILL AND COMPACTION	C.Y.				53		181	234
P-17	SLOPE PAVING 4"	S.Y.						57.8	57.8
K-3	REINFORCED CONCRETE CHANNEL LINING, 6"	S.F.			14,050		11,300		25,350

QUANTITY NOTES

SUPERSTRUCTURE REINFORCING BARS INCLUDE, DECK, DIAPHRAGMS, APPROACH SLABS AND ATTENUATER PAD.

SUBSTRUCTURE, REINFORCING BARS INCLUDE, PIER AND ABUTMENTS INCLUDING THE ABUTMENT DIAPHRAGM/BACKWALL.

RET. WALL, CHAN. AND MISC. INCLUDES RETAINING WALL, CUT OFF WALLS @ CHANNEL AND DRIVEWAY.

REINFORCING BAR QUANTITIES FOR SLOPE PAVING, CHANNEL PAVING AND CONCRETE WALL BARRIER ARE NOT SHOWN IN THE ABOVE ESTIMATE.

SUPERSTR. CONCRETE INCLUDES DECK, DIAPHRAGMS, APPROACH SLABS AND ATTENUATOR PADS.

SUBSTR. CONCRETE INCLUDES ABUTMENTS, WING WALLS, PIER, RETAINING WALL AND CUT OFF WALLS, AND APPROACH SLAB TRANSITIONS.

STRUCTURAL STEEL INCLUDES ALL, BOLTS, PLATES, SHAPES, RODS, HEADED STUD ANCHORS AND PIPE. IT DOES NOT INCLUDE PILES, PILE SPLICES NOR PILE POINTS, NOR DOWELS & SLEEVES IN CONCRETE WALL BARRIER.

INCIDENTAL WORK & MATERIALS

THESE ITEMS DO NOT INCLUDE ANY INCIDENTAL WORK OR MATERIALS REQUIRED BY SPECIAL PROVISIONS, STANDARD DRAWINGS, SUPPLEMENTAL SPECIFICATIONS TO THE STANDARD SPECIFICATIONS AND THE STANDARD SPECIFICATIONS.

ALL MATERIALS AND LABOR REQUIRED FOR THE COMPLETION OF THESE ITEMS ARE CONSIDERED INCIDENTAL TO THE COMPLETION OF THE WORK AND NO DIRECT PAYMENT WILL BE MADE.

1. POLYSTYRENE AND ADHESIVES
2. NONBONDED ELASTOMERIC BEARING PADS (AT ABUTS.)
3. SEALANTS
4. THREADED INSERTS AND H.S.A.
5. DE-WATERING OF EXCAVATIONS FOR CHANNEL AND PIER
6. PAINT
7. PILE POINTS AND SPLICES
8. STRUCTURAL STEEL IN CONCRETE WALL BARRIER

PILE DATA

	PILE	MIN. PENN. ELEV.	LENGTHS/Nº REQD. VERT.	2:12	3:12
ABUT. 1	HP 10 x 57	5495	69'-10"/6	-	72'-0"/8
PIER	HP 12 x 74	5500	62'-10"/10	63'-10"/2	64'-10"/4
ABUT. 2	HP10 x 57	5510	51'-10"/6	-	53'-6"/8

ALL PILES DRIVEN TO REFUSAL, 5 BLOWS PER ½"

AS BUILT INFORMATION
CONTRACTOR / DATE
SURVEYED / DATE
STAKED BY / DATE
INSPECTOR'S ACCEPTANCE BY / DATE
FIELD VERIFICATION BY / DATE
DRAWINGS CORRECTED BY / DATE
MICRO-FILM INFORMATION
RECORDED BY / DATE
NO.

BENCH MARKS

SURVEY INFORMATION
FIELD NOTES
NO. | BY | DATE

ENGINEER'S SEAL

MICHAEL S. BOLTON REGISTERED PROFESSIONAL ENGINEER

NO.	DATE	REMARKS	BY
△1	12/87	AS BUILT TO DATE	MSD

REVISIONS

DESIGN
DESIGNED BY BMS — DATE
DRAWN BY HMM — DATE 7-85
CHECKED BY — DATE 7-85

26 1826 2389

CITY OF ALBUQUERQUE
MUNICIPAL DEVELOPMENT DEPARTMENT
ENGINEERING DIVISION

TITLE: TIJERAS ARROYO CROSSING AT FOUR HILLS ROAD

SUMMARY OF QUANTITIES

APPROVALS	ENGINEER	DATE	APPROVALS	ENGINEER	DATE
City Engineer		6/24/86	Liquid Waste	N.A.	6/11/86
~~A.C.E.~~ - Design		6/24/86	Traffic	N.A.	6/24/86
~~A.C.E.~~ - Hydrology		6/24/86	Water	N.A.	6/11/86
Parks	N.A.				

DRAWING NO. 1826 | MAP NO. L-23-Z | SHEET S1 OF 39

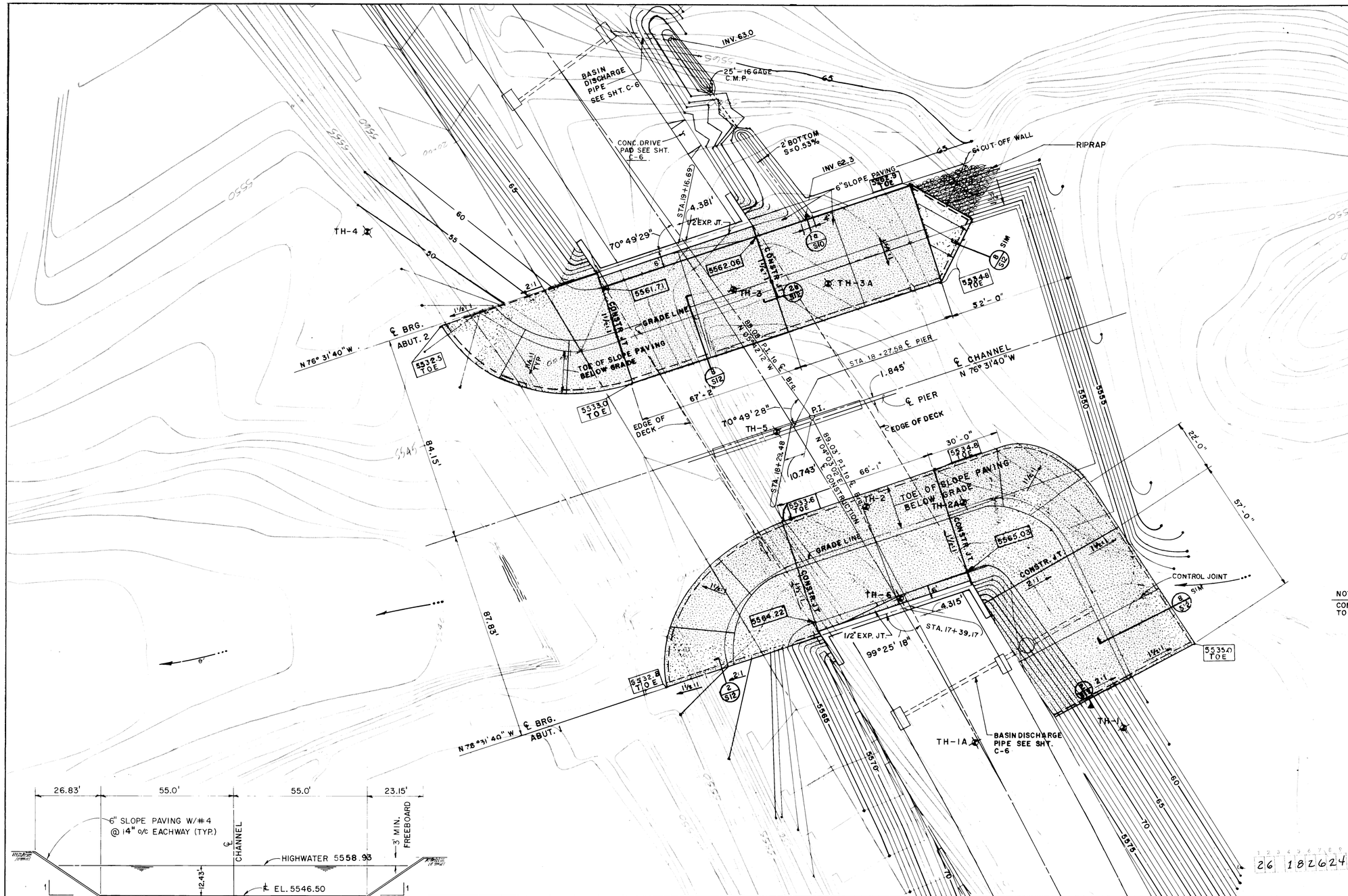

NOTE:
CONTRACTOR SHALL CONFINE ACTIVITIES TO THE R.O.W. DENOTED ON SHT. C-10.

WATER WAY DATA

Q_{100} = 22,600 CFS
V_{100} = 18.85 FPS
d_{100} = 12.43 FT.
SCOUR = 18.65 FT.

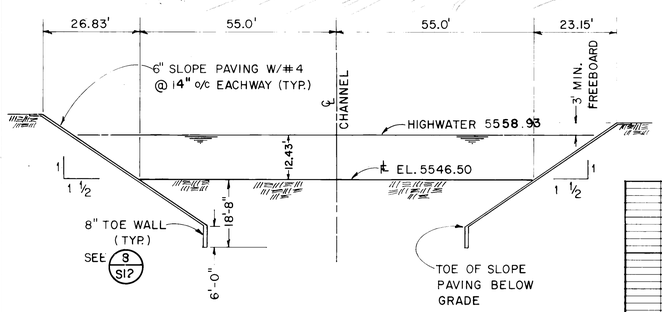

LOOKING WEST @ ℄ CONST.
Bridge Not Shown
SCALE: 1"=20'

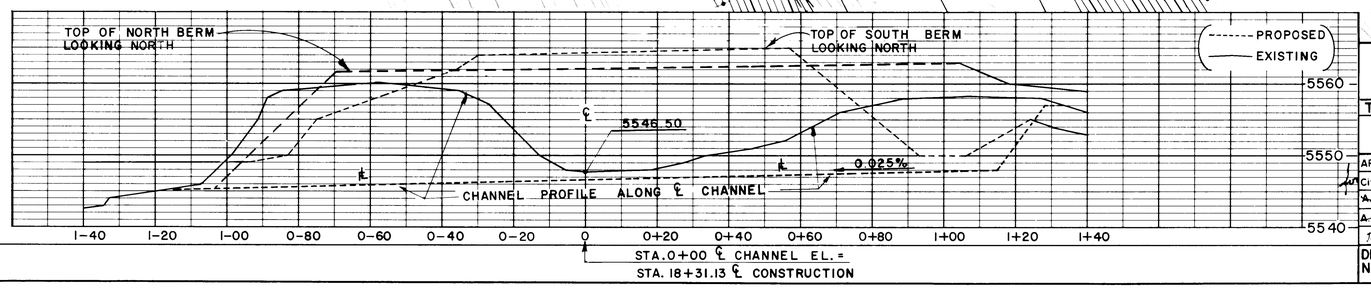

26 18262489

BCVAY ENGINEERS, INC.
ALBUQUERQUE
HOUSTON • SPOKANE • AUSTIN • BATON ROUGE

CITY OF ALBUQUERQUE
MUNICIPAL DEVELOPMENT DEPARTMENT
ENGINEERING DIVISION

TITLE: TIJERAS ARROYO CROSSING AT FOUR HILLS ROAD

GRADING & FOUNDATION PLAN

APPROVALS	ENGINEER	DATE	APPROVALS	ENGINEER	DATE
City Engineer		6/24/86	Liquid Waste	N.A.	9/11/86
A.C.E. - Design		6/24/86	Traffic	N.A.	6/23/86
A.C.E. - Hydrology		6/24/86	Water	N.A.	9/11/86

DRAWING NO.	MAP NO.	SHEET	OF
1826	L-23-Z	S2	39

AS BUILT INFORMATION
CONTRACTOR — DATE
WORK STAKED BY — DATE
INSPECTORS ACCEPTANCE BY — DATE
FIELD VERIFICATION BY — DATE
DRAWINGS CORRECTED BY — DATE
MICRO-FILM INFORMATION
RECORDED BY — DATE
NO.

BENCH MARKS

SURVEY INFORMATION
FIELD NOTES

NO.	BY	DATE

ENGINEER'S SEAL
MICHAEL SHERMAN BARR
NEW MEXICO
6416
PROFESSIONAL ENGINEER

NO.	DATE	REVISIONS	BY	MSD
1	12/87	AS BUILT TO DATE		
		REMARKS		

DESIGN
DESIGNED BY BMS — DATE 7-85
DRAWN BY DEL — DATE 7-85
CHECKED BY — DATE

24

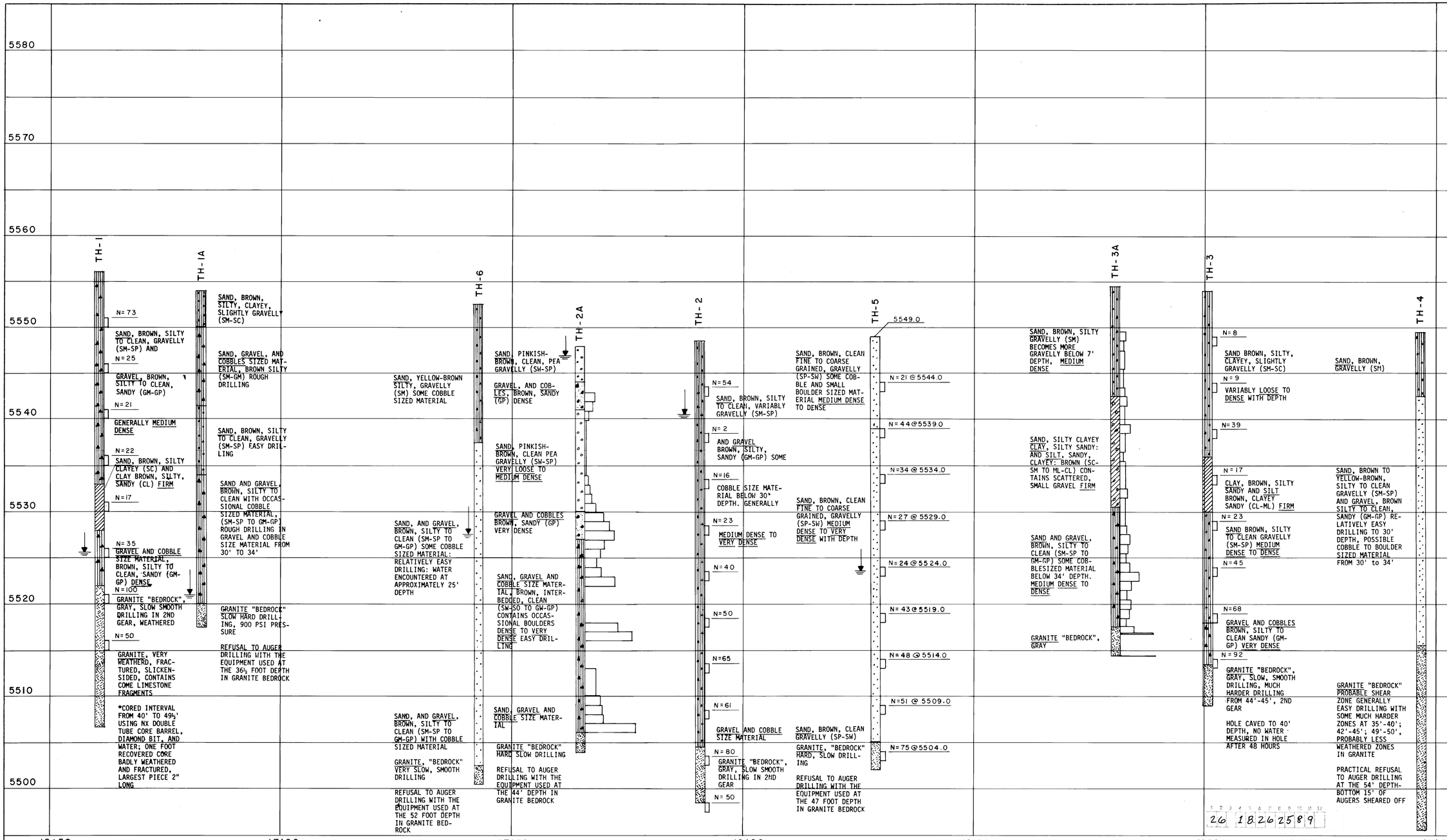

0 200 500 1000

SCALE FOR ROD SOUNDINGS 1"= 200 BLOWS/FT.

SOUNDINGS MADE WITH 2 ½" O.D., CONICAL, STEEL DRIVE POINT AND A 140LB HAMMER WITH 30 INCH GUIDED FREE FALL UNLESS OTHERWISE NOTED.

N= STANDARD PENETRATION NUMBER

= WATER TABLE

SOVAY ENGINEERS, INC.
ALBUQUERQUE
HOUSTON • SPOKANE • AUSTIN • BATON ROUGE

AS BUILT INFORMATION
CONTRACTOR
WORK STAKED BY DATE
INSPECTOR'S WORK ACCEPTANCE BY DATE
FIELD VERIFICATION BY DATE
DRAWINGS CORRECTED BY DATE
MICRO-FILM INFORMATION
RECORDED BY DATE
NO.

BENCH MARKS

SURVEY INFORMATION
FIELD NOTES
NO. BY DATE

ENGINEER'S SEAL
MICHAEL SCHAFER BROWN
NEW MEXICO
6418
REGISTERED PROFESSIONAL ENGINEER

NO.	DATE	REMARKS	BY
		REVISIONS	
		DESIGN	

DESIGNED BY BMS DATE 7-85
DRAWN BY DEL DATE 7-85
CHECKED BY DATE

CITY OF ALBUQUERQUE
MUNICIPAL DEVELOPMENT DEPARTMENT
ENGINEERING DIVISION

TITLE: TIJERAS ARROYO CROSSING AT FOUR HILLS ROAD

SOIL LOG

APPROVALS	ENGINEER	DATE	APPROVALS	ENGINEER	DATE
City Engineer		6/24/86	Liquid Waste	N.A.	4/11/86
~~A.C.E.~~ - Design		6/24/86	Traffic	N.A.	4/11/86
~~A.C.E.~~ - Hydrology		6/24/86	Water	N.A.	4/11/86
Parks	N/A				

DRAWING NO.	MAP NO.	SHEET	OF
1826	L-23-Z	S3	39

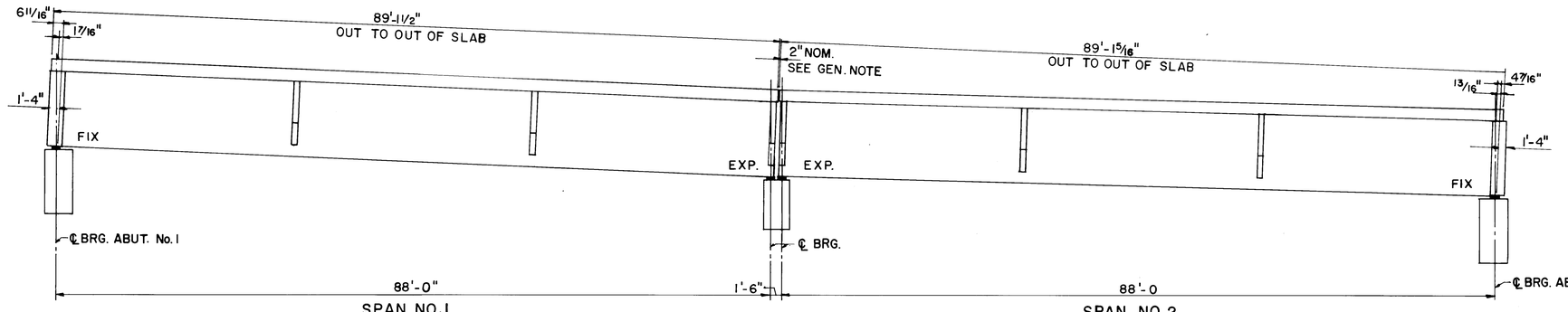

LONGITUDINAL SECTION (FACING WEST)

NO SCALE

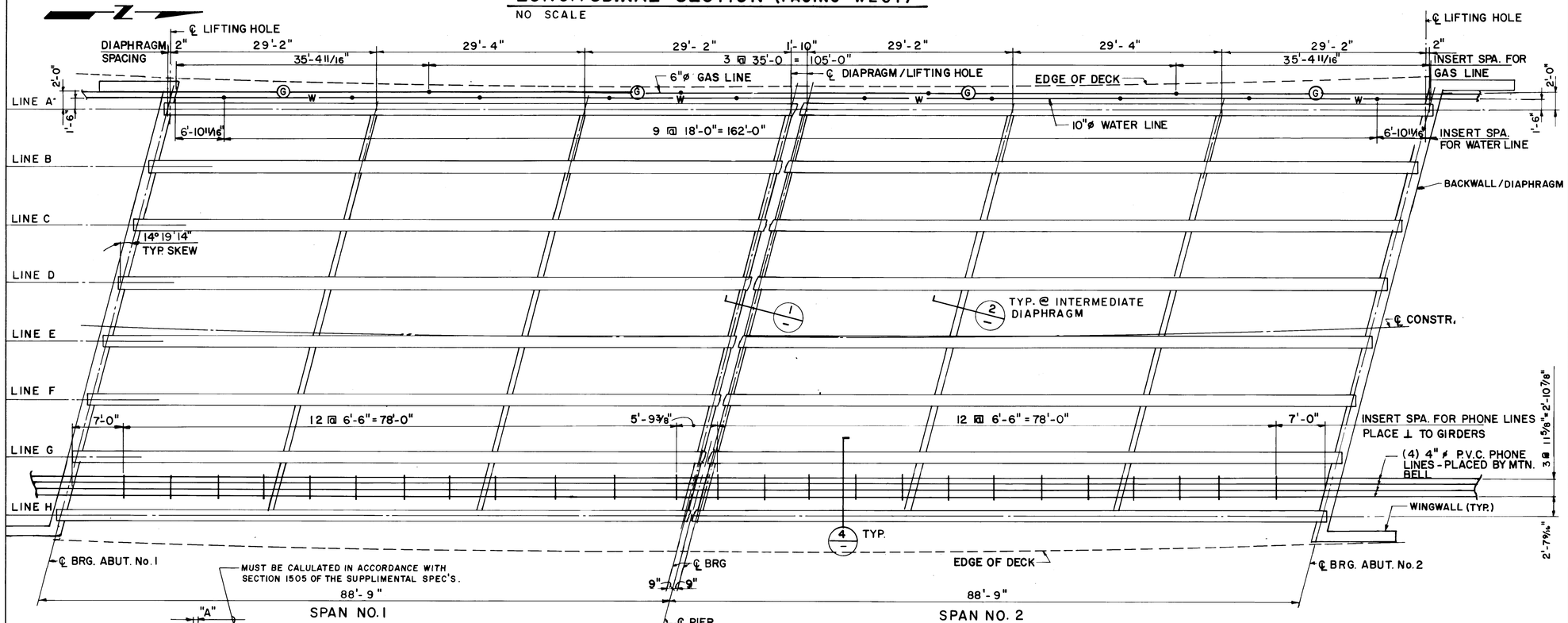

FRAMING PLAN

1/8" = 1'-0"

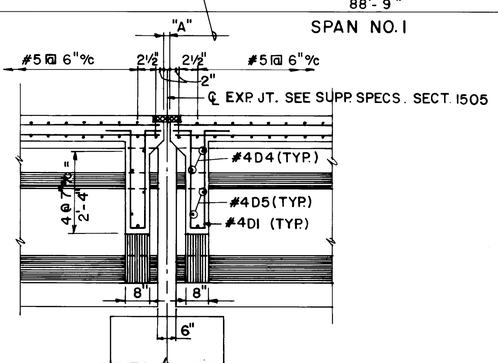

1 DIAPHRAGM @ EXP. JT.

1/2" = 1'-0"

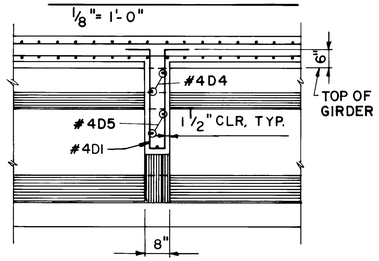

2 TYPICAL DIAPHRAGM

1/2" = 1'-0"

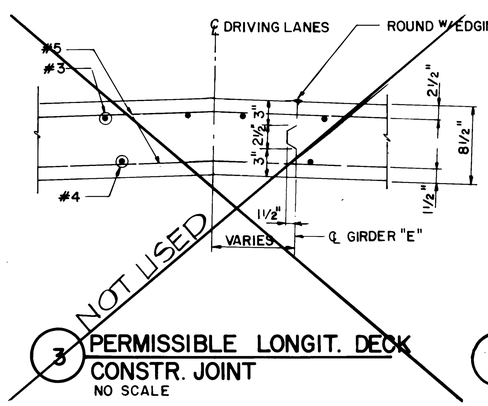

3 PERMISSIBLE LONGIT. DECK CONSTR. JOINT

NO SCALE

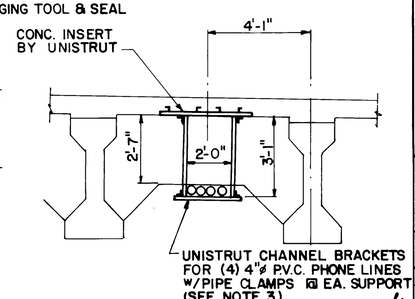

4 PHONE LINE HANGER

NO SCALE

1. THE WATERLINE UNDER THE BRIDGE SHALL BE 10" DIAMETER D.I. FLANGED PIPE WITH 2" THICK PRE-MOULDED POLYURETHANE WITH AN ALUMINUM JACKET. THE PIPE HANGERS SHALL BE ADJUSTIBLE, SWIVEL PIPE ROLL, FIG. 174 AS MANUFACTURED BY GRINNEL, OR APPROVED EQUIVALENT. PIPE ROLL SHALL BE OVERSIZED FOR INSULATION. CONCRETE INSERTS SHALL BE 7/8", SCREW CONCRETE INSERT, FIG. 152 ALSO BY GRINNEL, OR APPROVED EQUIVALENT.

2. THE 6" GAS LINE SHALL BE SUPPORTED BY GRINNEL, ADJUSTABLE SWIVEL PIPE ROLL, FIG. 174. INSERTS ARE 3/4" SCREW CONCRETE INSERTS, FIG 152 ALSO BY GRINNEL. THE GAS CO. OF NEW MEXICO WILL SUPPLY ALL HARDWARE.

3. THE 4 - 4" P.V.C. PHONE LINES ARE SUPPORTED BY UNISTRUT, OR APPROVED EQUIVALENT, CHANNEL TYPE SUPPORTS & INSERTS. ALL HARDWARE CONDUITS & INSTALLATION OF CONDUIT WILL BE PROVIDED BY MOUNTAIN BELL.

AS BUILT INFORMATION

CONTRACTOR | DATE
WORK STAKED BY | DATE
INSPECTOR'S ACCEPTANCE BY | DATE
FIELD VERIFICATION BY | DATE
DRAWINGS CORRECTED BY | DATE

MICRO-FILM INFORMATION

RECORDED BY | DATE
NO.

BENCH MARKS

SURVEY INFORMATION

FIELD NOTES

NO.	BY	DATE

ENGINEER'S SEAL

NO.	DATE	REMARKS	MSD BY
1	12/87	AS BUILT TO DATE	

REVISIONS

DESIGN

DESIGNED BY BMS DATE 7 - 85
DRAWN BY DEL/HMM DATE 7 - 85
CHECKED BY DATE

26 1826 2689

BOVAY ENGINEERS, INC.
ALBUQUERQUE
HOUSTON • SPOKANE • AUSTIN • BATON ROUGE

CITY OF ALBUQUERQUE
MUNICIPAL DEVELOPMENT DEPARTMENT
ENGINEERING DIVISION

TITLE: TIJERAS ARROYO CROSSING AT FOUR HILLS ROAD

FRAMING PLAN & DETAILS

APPROVALS	ENGINEER	DATE	APPROVALS	ENGINEER	DATE
City Engineer		6/24/86	Liquid Waste	N.A.	4/11/86
A.C.E.-Design		6/24/86	Traffic	N.A.	6/24/86
A.C.E.-Hydrology		6/24/86	Water	N.A.	4/11/86
	N/A				

DRAWING NO.	MAP NO.	SHEET	OF
1826	L-23-Z	S4	39

26

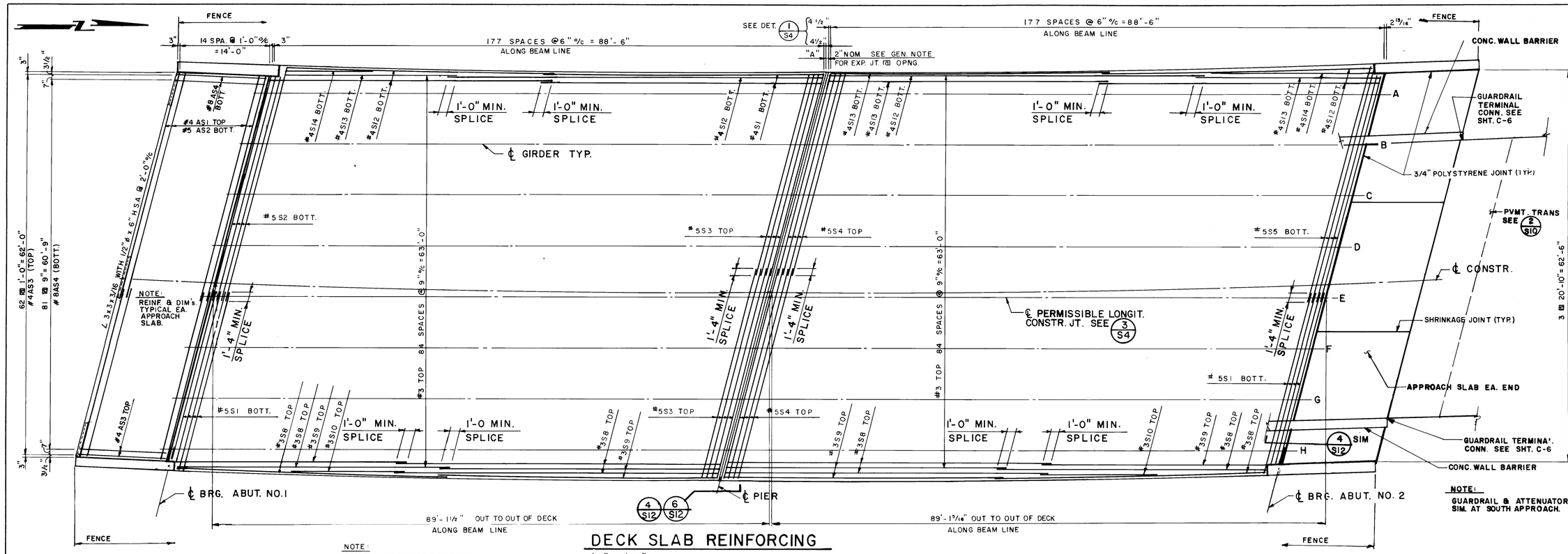

NOTE: TRANSVERSE BAR SPACINGS ARE NORMAL TO ℄ CONSTR

DECK SLAB REINFORCING

1/8" = 1'-0"

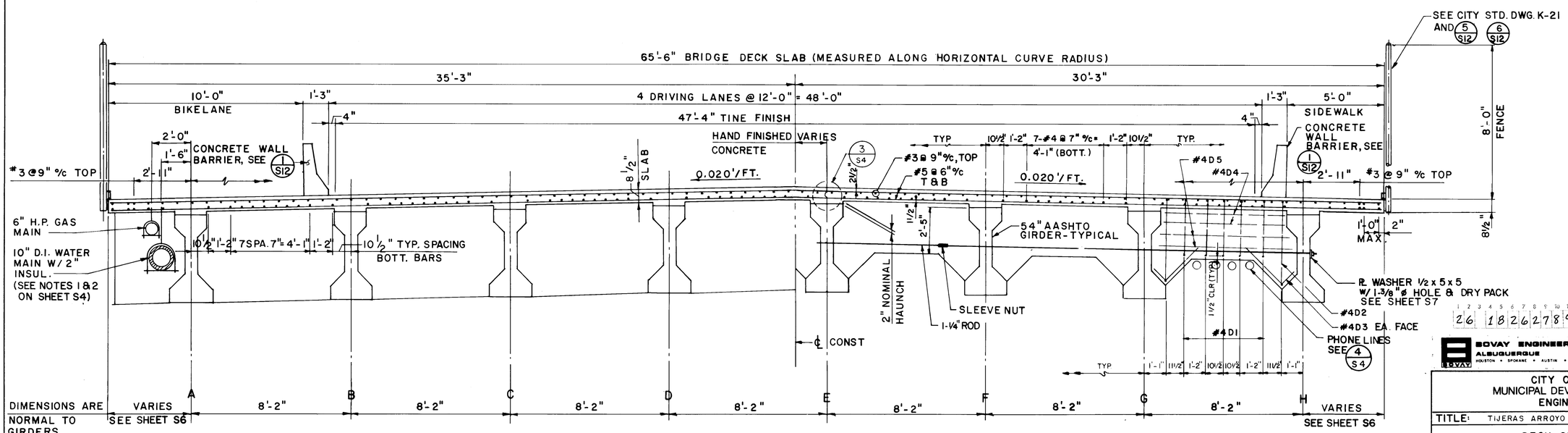

HALF SECTION @ ABUTMENT

HALF SECTION @ DIAPHRAGM

TRANSVERSE SECTION

3/8" = 1'-0" (LOOKING NORTH)

NOTE: THE NEW CONCRETE RIDING SURFACES SHALL BE GIVEN A TRANSVERSE GROOVED TEXTURE AFTER THE CONCRETE HAS HARDENED AND CURED IN ACCORDANCE WITH THE SPECIFICATIONS AND SPECIAL PROVISIONS, IF TRAFFIC IS ALLOWED ON FINISHED DECK SURFACES PRIOR TO GROOVING. THE SURFACES SHALL BE GIVEN A BROOMED TEXTURE WHILE STILL SOFT IN ADDITION TO BEING GROOVED WHEN HARD.

AS BUILT INFORMATION

	DATE
CONTRACTOR	
WORK STAKED BY	
INSPECTED BY	
ACCEPTANCE BY	
FIELD VERIFICATION BY	
DRAWINGS CORRECTED BY	
MICRO-FILM INFORMATION	
RECORDED BY	
NO.	

BENCH MARKS

SURVEY INFORMATION

FIELD NOTES

NO.	BY	DATE

ENGINEER'S SEAL

MICHAEL J. HEFFER — STATE OF NEW MEXICO — 6819 — REGISTERED PROFESSIONAL ENGINEER

NO.	DATE	REVISIONS	BY
1	12/87	AS BUILT TO DATE	MSD

REMARKS

DESIGN

DESIGNED BY BMS DATE 7-85

DRAWN BY HMM / DEL DATE 7-85

CHECKED BY DATE

SOVAY ENGINEERS, INC. ALBUQUERQUE HOUSTON • SPOKANE • AUSTIN • BATON ROUGE

26 18 26 27 8 9

CITY OF ALBUQUERQUE
MUNICIPAL DEVELOPMENT DEPARTMENT
ENGINEERING DIVISION

TITLE: TIJERAS ARROYO CROSSING AT FOUR HILLS ROAD

DECK SLAB REINFORCING

APPROVALS	ENGINEER	DATE	APPROVALS	ENGINEER	DATE
City Engineer		6/24/86	Liquid Waste	N.A.	6/11/86
A.C.E.-Design		6/24/86	Traffic	N.A.	6/11/86
A.C.E.-Hydrology		6/24/86	Water	N.A.	6/11/86
Parks	N/A				

DRAWING NO.	MAP NO.	SHEET	OF
18 26	L-23-Z	S5	39

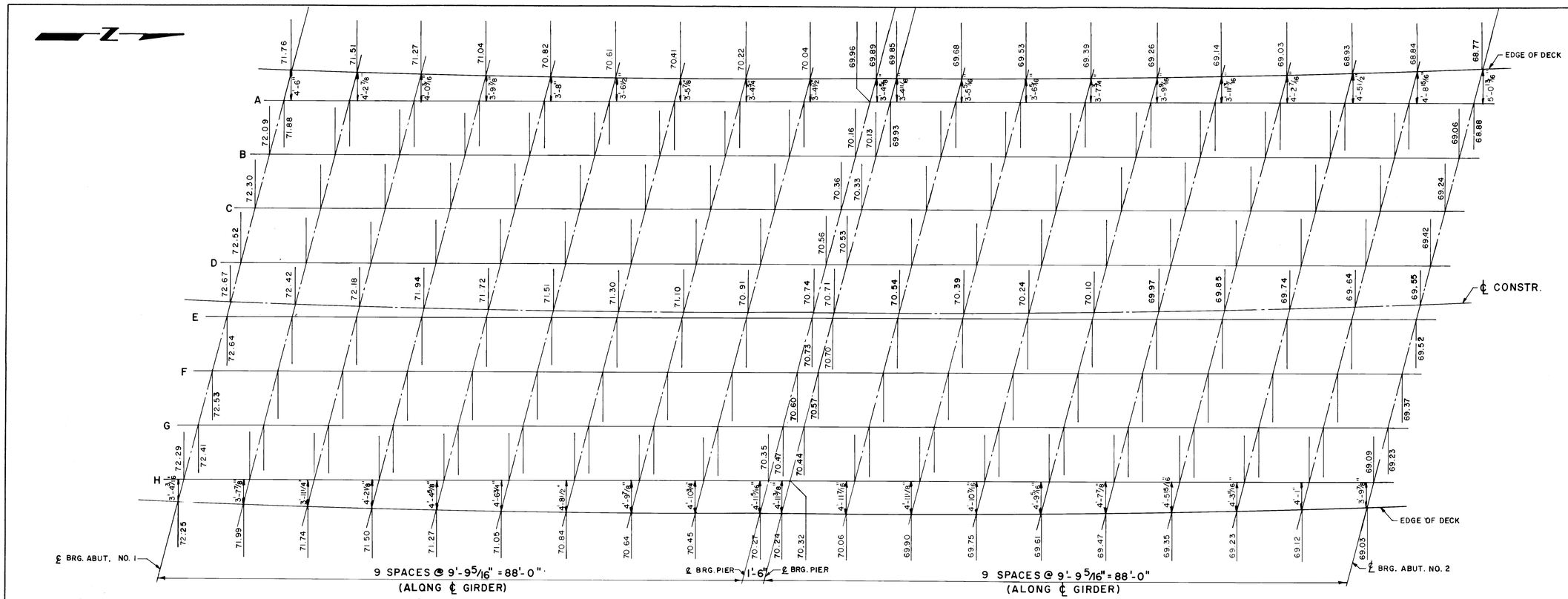

TOP OF SLAB ELEVATIONS (EL. +5500)

NO SCALE

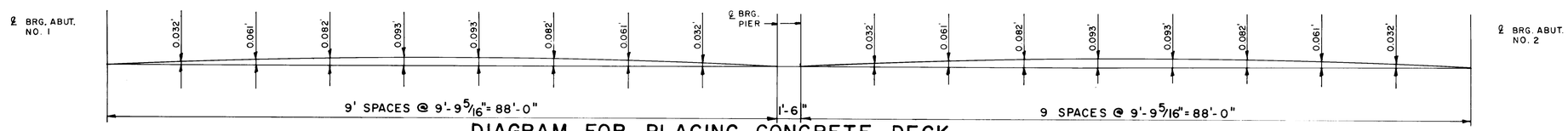

DIAGRAM FOR PLACING CONCRETE DECK

NO SCALE

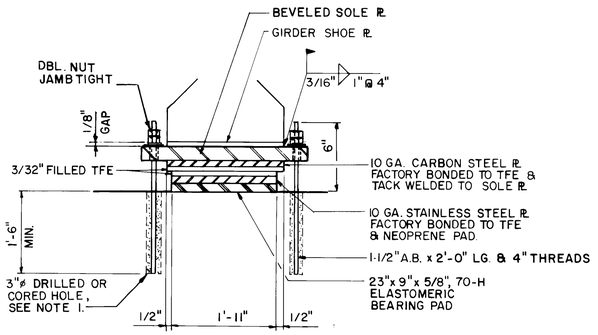

EXP. BEARING — TFE @ PIER

NO SCALE

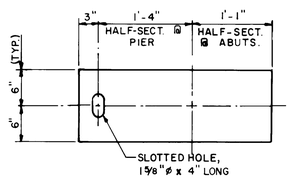

PLAN

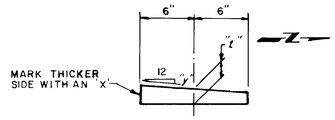

	"y"	"t"	SIZE	NO. REQD.
ABUT. NO. 1	1/4"	3/4"	1'-0" x 2'-2"	8
PIER SPAN NO. 1	1/4"	1 1/8"	1'-0" x 3'-2"	8
PIER SPAN NO. 2				
"A" THRU "E"	1/8"	3/4"	1'-0" x 3'-2"	5
"F" THRU "H"	3/16"	3/4"	1'-0" x 3'-2"	3
ABUT. NO. 2				
"A" THRU "E"	1/8"	3/4"	1'-0" x 2'-2"	5
"F" THRU "H"	3/16"	3/4"	1'-0" x 2'-2"	3

ELEVATION

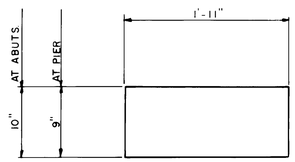

70 DUROMETER HARDNESS
16 REQD. AT ABUTS
16 REQD. AT PIER

PLAN

5/8" ELASTOMERIC BEARING PAD

NO SCALE

BEVELED SOLE PLATE

NO SCALE

26 18 26 28 89

AS BUILT INFORMATION

CONTRACTOR
WORK STAKED BY — DATE
INSPECTORS
ACCEPTANCE BY — DATE
FIELD VERIFICATION BY — DATE
DRAWINGS CORRECTED BY — DATE
MICRO-FILM INFORMATION
RECORDED BY — DATE
NO.

BENCH MARKS

SURVEY INFORMATION

FIELD NOTES

NO.	BY	DATE

ENGINEER'S SEAL

MICHAEL SHEFFIELD BOWLES — REGISTERED PROFESSIONAL ENGINEER

NO.	DATE	REMARKS
1	12/87	AS BUILT TO DATE

REVISIONS

DESIGN — MSD

DESIGNED BY BMS — DATE 7-85
DRAWN BY HMM — DATE 7-85
CHECKED BY — DATE

BOVAY ENGINEERS, INC.
ALBUQUERQUE
HOUSTON • SPOKANE • AUSTIN • BATON ROUGE

CITY OF ALBUQUERQUE
MUNICIPAL DEVELOPMENT DEPARTMENT
ENGINEERING DIVISION

TITLE: TIJERAS ARROYO CROSSING AT FOUR HILLS ROAD

TOP OF SLAB ELEVATIONS

APPROVALS	ENGINEER	DATE	APPROVALS	ENGINEER	DATE
City Engineer		6/29/86	Liquid Waste	N.A.	9/11/86
A-E-E - Design		6/29/86	Traffic	N.A.	6/24/86
A-E-E - Hydrology		6/24/86	Water	N.A.	9/11/86
Parks					

DRAWING NO.	MAP NO.	SHEET	OF
1826	L-23-Z	S6	39

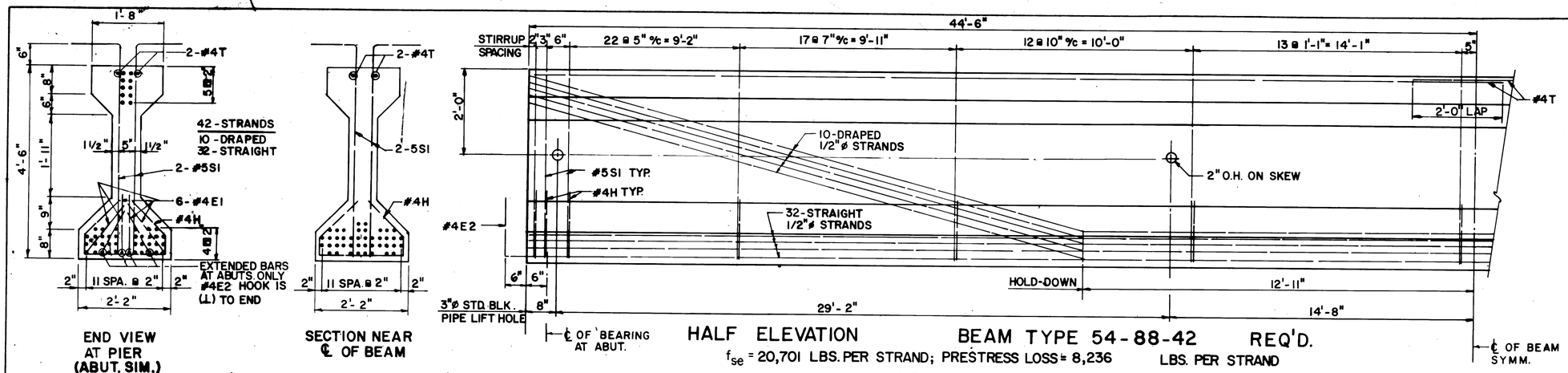

HALF ELEVATION BEAM TYPE 54-88-42 REQ'D.

f_{se} = 20,701 LBS. PER STRAND; PRESTRESS LOSS = 8,236 LBS. PER STRAND

NOTE: ALL STIRRUPS ARE #5 GRADE 40. #4 GRADE 60 (A.S.T.M. A706) MAY BE SUBSTITUTED FOR #5 GRADE 40 AT THE SPACINGS SHOWN.

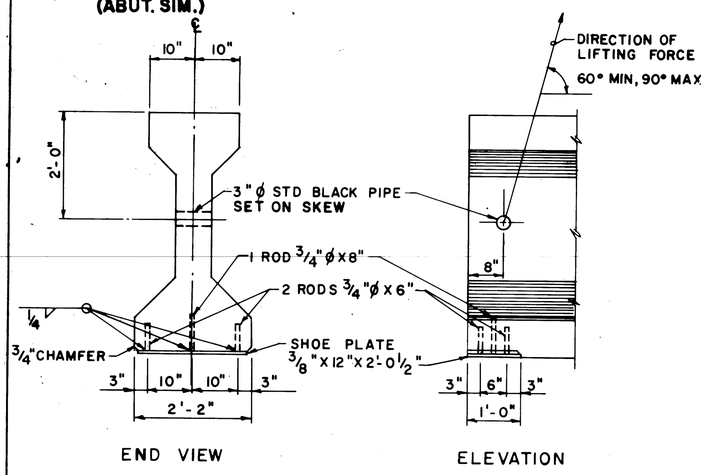

DETAILS OF END OF BEAM

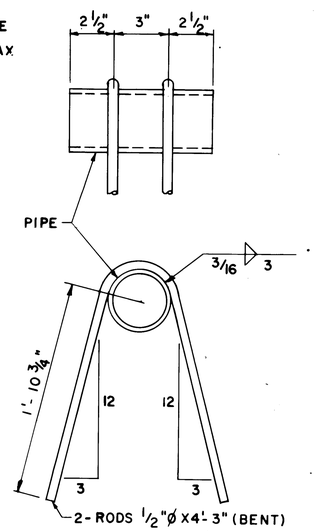

3"ø STANDARD BLACK PIPE DETAIL

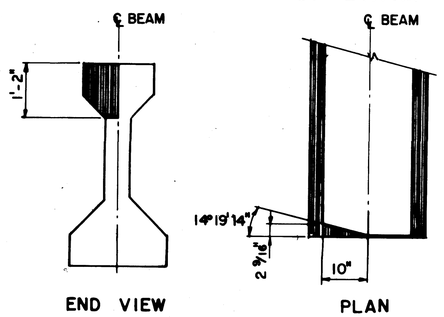

DETAILS OF END OF BEAM AT EXP. JT.

GENERAL NOTES

1. COST OF REINFORCING BARS AND STRUCTURAL STEEL EMBEDDED IN BRIDGE BEAMS IS TO BE INCLUDED IN THE UNIT PRICE BID FOR PRESTRESSED CONCRETE BRIDGE MEMBER, TYPE 54.
2. BEAMS TO BE LIFTED BY MEANS OF DEVICES SATISFACTORY TO THE ENGINEER, INSERTED THRU THE 3" DIA. PIPE AT THE ENDS. BEAMS TO BE CAST, STORED AND HAULED IN UPRIGHT POSITION. ALTERNATE LIFTING DEVICES MUST BE APPROVED BY THE ENGINEER PRIOR TO USE.
3. THE TOP SURFACE OF THE BEAM IS TO BE THOROUGHLY WIRE BRUSHED AND SCORED TRANSVERSELY AFTER INITIAL SET (MIN. DEPTH ≈ 1/4" ENTIRE FLANGE WIDTH).
4. BEAM CAMBER IS THE COMPUTED NET UPWARD DEFLECTION AT CENTER LINE OF BEAM DUE TO PRESTRESSING, WITH WEIGHT OF BEAM ACTING.
5. DEAD LOAD DEFLECTION IS THE COMPUTED DEFLECTION DUE TO WEIGHT OF SLAB, DIAPHRAGMS AND SUPERIMPOSED DEAD LOAD.
6. IF THE CONTRACTOR CHOOSES TO USE UNCOATED SEVEN-WIRE STRESS-RELIEVED STRANDS HAVING PROPERTIES OTHER THAN THOSE SHOWN IN DESIGN DATA, REVISED DETAILS SHOWING NUMBER AND ARRANGEMENT OF STRANDS SHALL BE SUBMITTED TO THE ENGINEER FOR APPROVAL.
7. STIRRUPS MAY BE WELDED INTO A "CAGE" AT THE FABRICATOR'S OPTION.
8. TYPE III CEMENT MAY BE USED AT THE FABRICATOR'S OPTION.
9. SHOE PLATES MUST BE STRAIGHTENED PRIOR TO CASTING INTO BEAM.

DESIGN DATA

DESIGN ACCORDING TO A.A.S.H.T.O. SPECIFICATIONS DATED 1983 & INTERIMS TO DATE.
DESIGN STRESSES:
BEAMS: F'CI (MIN.COMPRESSIVE STRENGTH OF CONCRETE AT TIME OF INITIAL PRESTRESS) = 4750 LBS. PER SQ. IN.; F'C = 5500 LBS. PER SQ. IN.; N=7: 1/2" ø HIGH-TENSILE-STRENGTH SEVEN-WIRE STRANDS, INITIAL PRESTRESS = 28910 LBS. PER STRAND; F'S: 41300 LBS. PER STRAND; FSY = 35100 LBS. PER STRAND.
CONVENTIONAL REINFORCING BARS: F_s = 20000 LBS. PER SQ. IN.; F_y = 40000 LBS. PER IN.. COMPOSITE SLAB: F'C = 3000 LBS. PER SQ. IN.; N=10; F_c = 20000 LBS. PER SQ. IN.. ALLOWANCE FOR FUTURE WEARING SURFACE = 30 LBS. PER SQ. FT. LL = HS 20-44.

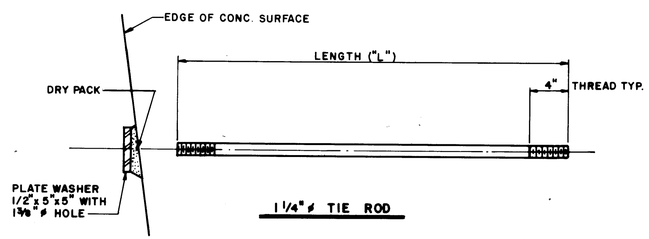

1 1/4" ø TIE ROD

	TIE ROD "L"	TIE ROD NO.	TIE ROD "L"	NO.	WASHERS & HEX NUTS	SLEEVE NUTS
ABUT. NO. 1	24'-0"	2	16'-2"	1	2	2
INTR. DIAPH. & @ PIER	20'-0"	12	19'-10"	6	12	12
ABUT. NO. 2	24'-0"	2	17'-3"	1	2	2
				TOTAL	16	16

NOTE: ROD LENGTHS ARE BASED ON 3" SEPARATION IN SLEEVE NUT.

REINFORCING BARS REQUIRED FOR ONE BEAM

BAR	TYPE	BEAM SIZE	"X"	"Y"	LENGTH	NO. REQ.
E1	2	#4	5'-0"	1 3/4"	8'-8"	8
E2	2	#4	5'-8"	1 3/4"	6'-4"	4
S1	2	#5	4'-10"	1 7/8"	5'-8"	268
T	1	#4	-	-	45'-4"	4
H	3	#4	-	-	4'-8"	134

BAR BENDING DIAGRAMS

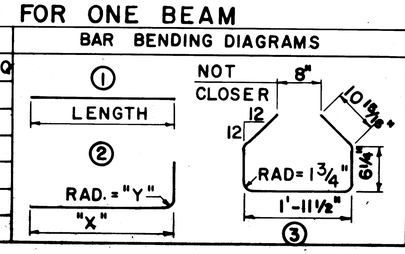

ESTIMATED QUANTITIES FOR ONE BEAM AND BEAM DATA (FOR INFORMATION OF CONTRACTOR NOT BID ITEMS)

BEAM 16 REQD.	CONCRETE	REINFORCING STEEL 1/2"ø STRANDS	REINFORCING STEEL CONVENTIONAL	STRUCTURAL STEEL (EMBEDDED IN BEAM)	WEIGHT	CAMBER	DEAD LOAD DEFLECTION
54-88-42	18.06 C.Y.	1964 lbs	2170 lbs	96 lbs	36.13 TONS	1 7/16"	11/8"

26 1826 2989

AS BUILT INFORMATION
CONTRACTOR / CONVERTED / STAKED BY / INSPECTOR'S ACCEPTANCE BY / FIELD VERIFICATION BY / VERIFICATION CORRECTED BY — DATE
MICRO-FILM INFORMATION
RECORDED BY — DATE
NO.

BENCH MARKS

SURVEY INFORMATION
FIELD NOTES
NO. | BY | DATE

ENGINEER'S SEAL
MICHAEL SHAW NEW MEXICO REGISTERED PROFESSIONAL ENGINEER 6416

NO.	DATE	REMARKS	BY

REVISIONS

DESIGNED BY BMS — DATE 7-85
DRAWN BY HMM — DATE 7-85
CHECKED BY — DATE

SOVAY ENGINEERS, INC.
ALBUQUERQUE
HOUSTON • SPOKANE • AUSTIN • BATON ROUGE

CITY OF ALBUQUERQUE
MUNICIPAL DEVELOPMENT DEPARTMENT
ENGINEERING DIVISION

TITLE: TIJERAS ARROYO CROSSING AT FOUR HILLS ROAD

PRESTRESSED BEAM

APPROVALS	ENGINEER	DATE	APPROVALS	ENGINEER	DATE
City Engineer		6/27/86	Liquid Waste	N.A.	4/8/86
A.C.E.-Design		6/26/86	Traffic	N.A.	4/8/86
A.C.E.-Hydrology		6/26/86	Water	N.A.	4/8/86
	N.A.				

DRAWING NO. 1826 — MAP NO. L-23-Z — SHEET S7 OF 39

29

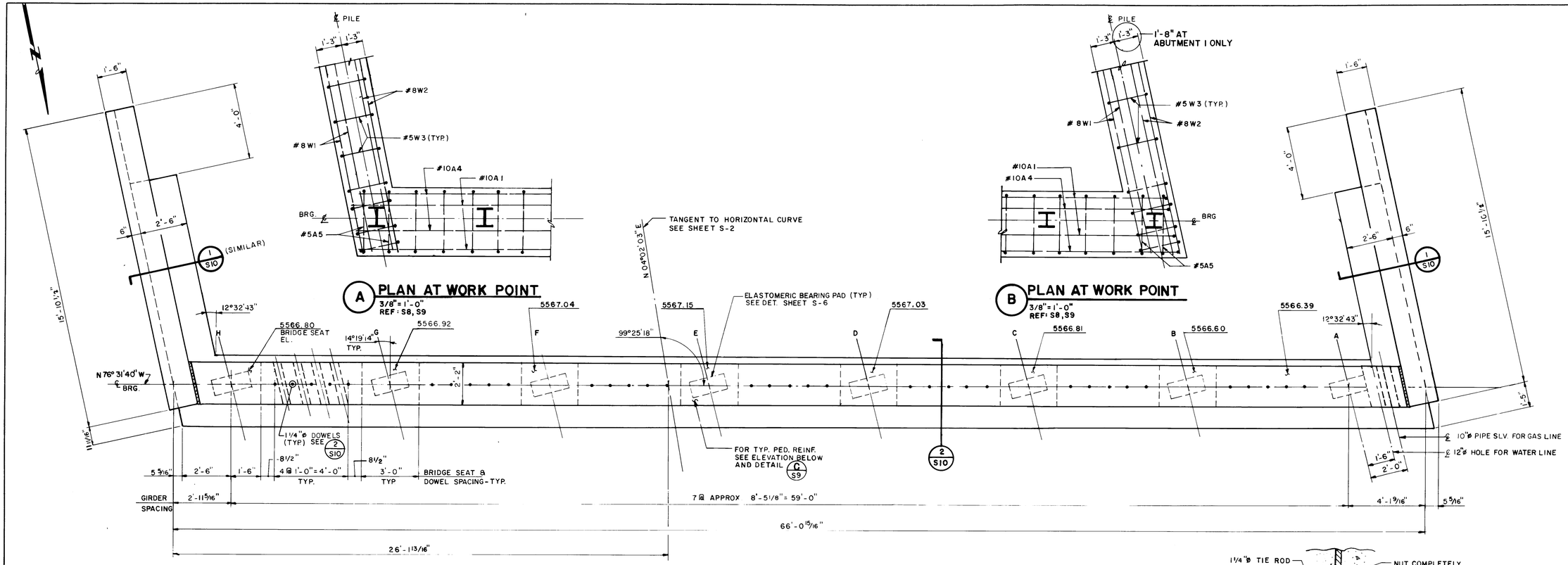

NOTES - ABUTMENT 1 & 2

1. POLYSTYRENE SHALL COMPLETELY COVER ALL ABUTMENTS AND PEDESTAL CONCRETE SURFACES IN CONTACT WITH THE BACKWALL/DIAPHRAGM. PLACE POLYSTYRENE WITH SUITABLE ADHESIVE AND CAULK ALL GAPS BETWEEN JOINTS.
2. THE PEDESTAL AT GIRDER LINE B AND LINE H, ABUT. 2 MUST BE PLACED MONOLITHICALLY WITH THE ABUTMENT. ALL OTHER PEDESTALS MAY BE PLACED SEPARATELY OR MONOLITHICALLY. THOSE PLACED SEPARATELY SHALL HAVE AN INTENTIONALLY ROUGHENED CONTACT SURFACE.
3. THE BACKWALL/DIAPHRAGM MAY BE PLACED IN ONE CONTINUOUS POUR, PRIOR TO THE DECK PLACEMENT. THE BACKWALL/DIAPHRAGM SHALL HAVE ATTAINED A MINIMUM STRENGTH OF 3000 PSI PRIOR TO THE DECK POUR, IF SEPARATE POURS ARE USED.
4. THE HORIZONTAL REINFORCING SHOWN IN THE BACKWALL/DIAPHRAGM IS IN THE FRONT FACE ONLY, UNLESS NOTED OTHERWISE.
5. ELASTOMERIC BEARING PADS SHALL BE GLUED TO THE BRIDGE SEAT & SOLE PLATE AT LEAST 2 DAYS PRIOR TO THE GIRDER PLACEMENT TO PREVENT SLIPPAGE.

26 18263089

AS BUILT INFORMATION
CONTRACTOR
WORK STAKED BY
STRUCT. DWGS ACCEPTANCE BY — DATE
FIELD VERIFICATION BY — DATE
DRAWINGS CORRECTED BY — DATE
MICRO-FILM INFORMATION
RECORDED BY — DATE
NO.

BENCH MARKS

SURVEY INFORMATION
FIELD NOTES

NO.	BY	DATE

ENGINEER'S SEAL

NO.	DATE	REMARKS	BY
1	12/87	AS BUILT TO DATE	MSD

REVISIONS

DESIGNED BY BMS — DATE 7-85
DRAWN BY HMM — DATE 7-85
CHECKED BY — DATE

CITY OF ALBUQUERQUE
MUNICIPAL DEVELOPMENT DEPARTMENT
ENGINEERING DIVISION

TITLE: TIJERAS ARROYO CROSSING AT FOUR HILLS ROAD

ABUTMENT NO. 1

APPROVALS	ENGINEER	DATE	APPROVALS	ENGINEER	DATE
City Engineer		6/24/86	Liquid Waste	N.A.	4/11/86
A.C.E.-Design		6/24/86	Traffic	N.A.	6/24/86
A.C.E.-Hydrology		6/24/86	Water	N.A.	4/11/86
	N/A				

DRAWING NO. 1826 — MAP NO. L-23-Z — SHEET S8 OF 39

BOWAY ENGINEERS, INC. ALBUQUERQUE
HOUSTON • SPOKANE • AUSTIN • BATON ROUGE

30

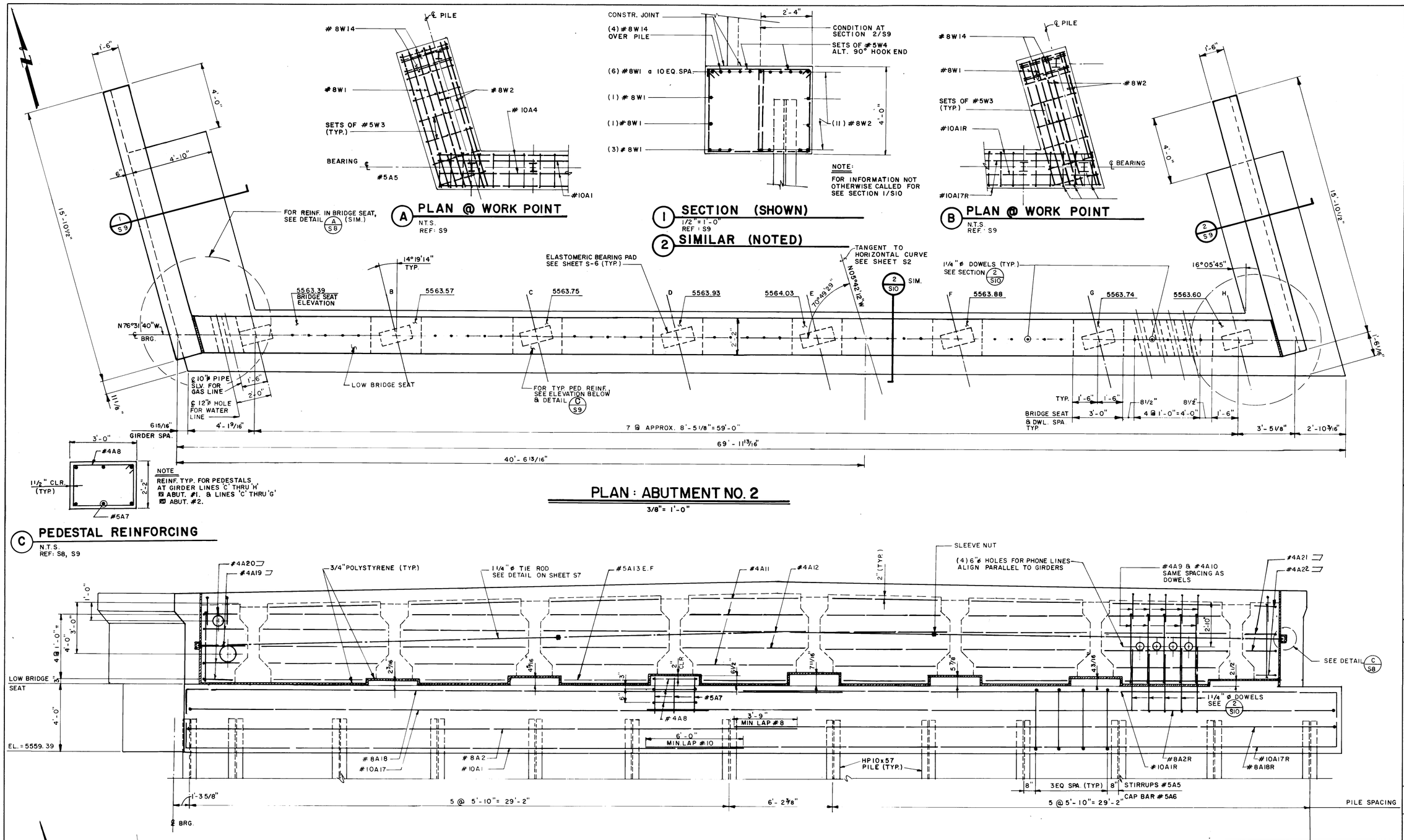

AS BUILT INFORMATION

CONTRACTOR
WORK STAKED BY — DATE
INSPECTORS ACCEPTANCE BY — DATE
FIELD VERIFICATION BY — DATE
DRAWINGS CORRECTED BY — DATE
MICRO-FILM INFORMATION
RECORDED BY — DATE
NO.

BENCH MARKS

SURVEY INFORMATION

NO.	BY	DATE
	FIELD NOTES	

ENGINEER'S SEAL

NO.	DATE	REMARKS	BY
1	2-9-87	REDESIGN ABUTMENT NO. 2	A.S.

REVISIONS

DESIGN
DESIGNED BY BMS — DATE 7-85
DRAWN BY HMM — DATE 7-85
CHECKED BY — DATE

CITY OF ALBUQUERQUE
MUNICIPAL DEVELOPMENT DEPARTMENT
ENGINEERING DIVISION

TITLE: TIJERAS ARROYO CROSSING AT FOUR HILLS ROAD

ABUTMENT NO. 2

APPROVALS	ENGINEER	DATE	APPROVALS	ENGINEER	DATE
City Engineer		6/24/86	Liquid Waste	N.A.	4/11/86
A.C.E.-Design		6/24/86	Traffic	N.A.	6/24/86
A.C.E.-Hydrology		6/24/86	Water	N.A.	4/11/86
	N/A				

26 18263189

SOVAY ENGINEERS, INC.
ALBUQUERQUE
HOUSTON • SPOKANE • AUSTIN • BATON ROUGE

DRAWING NO.	MAP NO.	SHEET	OF
1826	L-23-Z	S9	39

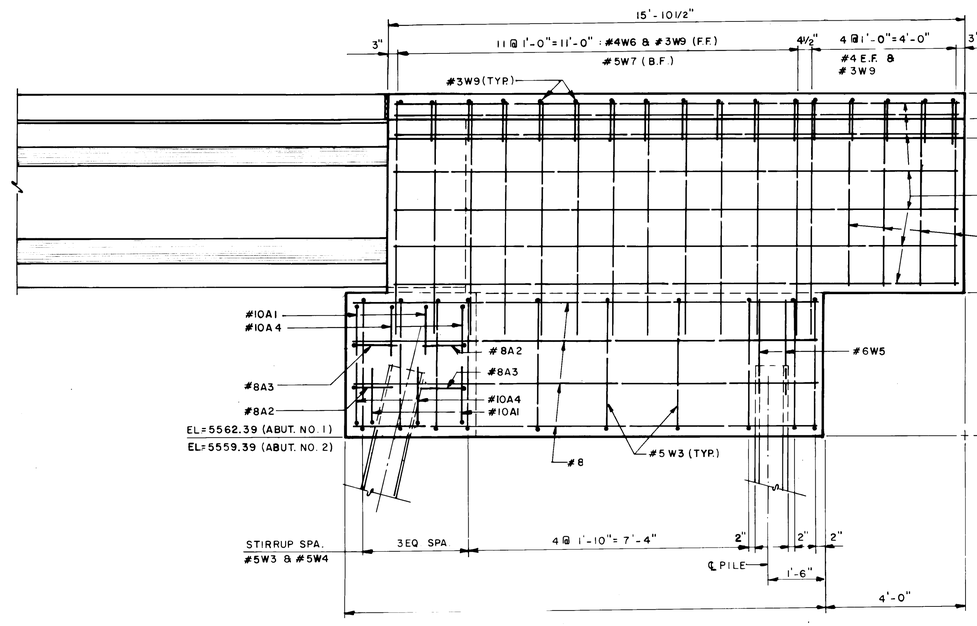

TYP. WINGWALL ELEVATION

1/2" = 1'-0"

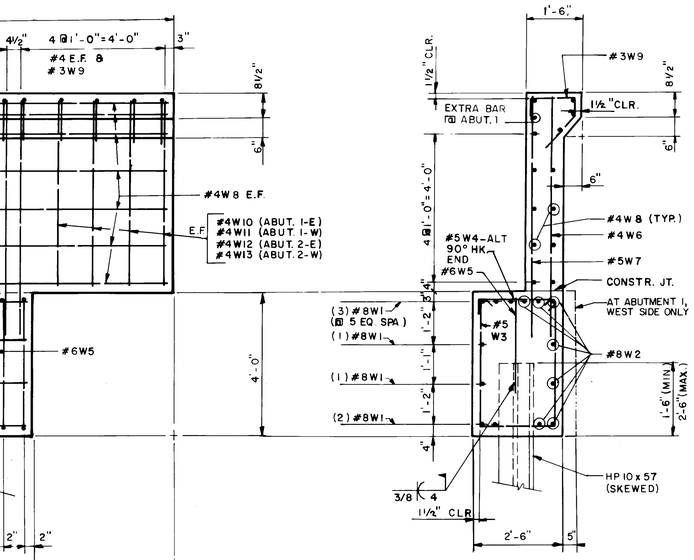

1 SECTION

1/2" = 1'-0"
REF: S8, S9

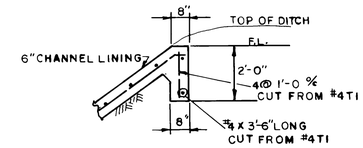

1a CUT OFF WALL @ DITCH

3/8 = 1-0
REF: S2

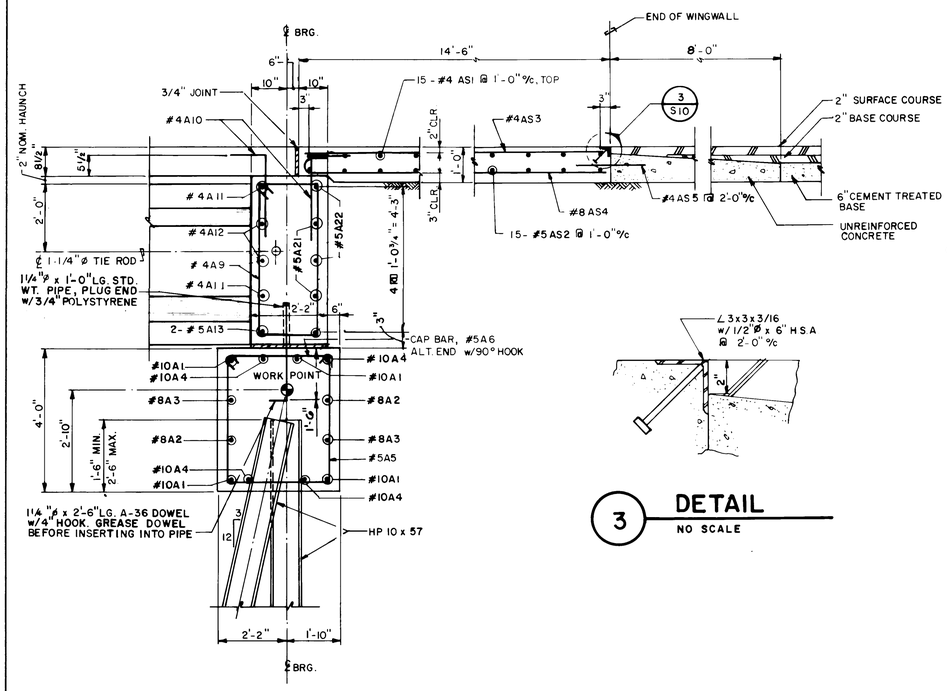

2 ABUTMENT SECTION

1/2" = 1'-0"
REF: S8, S9

3 DETAIL

NO SCALE

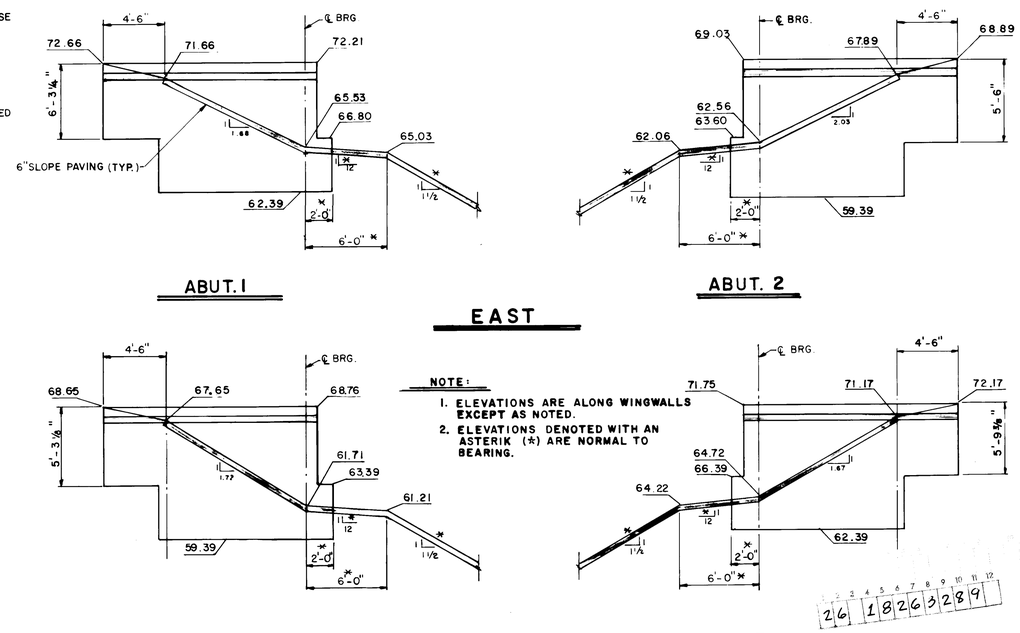

NOTE:

1. ELEVATIONS ARE ALONG WINGWALLS EXCEPT AS NOTED.
2. ELEVATIONS DENOTED WITH AN ASTERIK (*) ARE NORMAL TO BEARING.

WINGWALL ELEVATIONS

AS BUILT INFORMATION

CONTRACTOR
WORK STAKED BY
INSPECTOR'S ACCEPTANCE BY
FIELD VERIFICATION BY
DRAWINGS CORRECTED BY
MICRO-FILM INFORMATION
RECORDED BY
NO.
DATE

BENCH MARKS

SURVEY INFORMATION

FIELD NOTES

NO.	BY	DATE

ENGINEER'S SEAL

MICHAEL E. R. WIGGINS, REGISTERED PROFESSIONAL ENGINEER

NO.	DATE	REMARKS	BY
1	12/87	AS BUILT TO DATE	MSD

REVISIONS

DESIGNED BY BMS DATE 7-85
DRAWN BY HMM DATE 7-85
CHECKED BY DATE

BOVAY ENGINEERS, INC.
ALBUQUERQUE
HOUSTON • SPOKANE • AUSTIN • BATON ROUGE

CITY OF ALBUQUERQUE
MUNICIPAL DEVELOPMENT DEPARTMENT
ENGINEERING DIVISION

TITLE: TIJERAS ARROYO CROSSING AT FOUR HILLS ROAD

WINGWALLS

APPROVALS	ENGINEER	DATE	APPROVALS	ENGINEER	DATE
City Engineer		6/24/86	Liquid Waste	N.A.	4/11/86
A.C.E.-Design		6/24/86	Traffic	N.A.	6/24/86
A.C.E.-Hydrology		6/24/86	Water	N.A.	4/11/86
	N/A				

for

26 1826 3289

DRAWING NO.	MAP NO.	SHEET	OF
1826	L-23-Z	S10	39

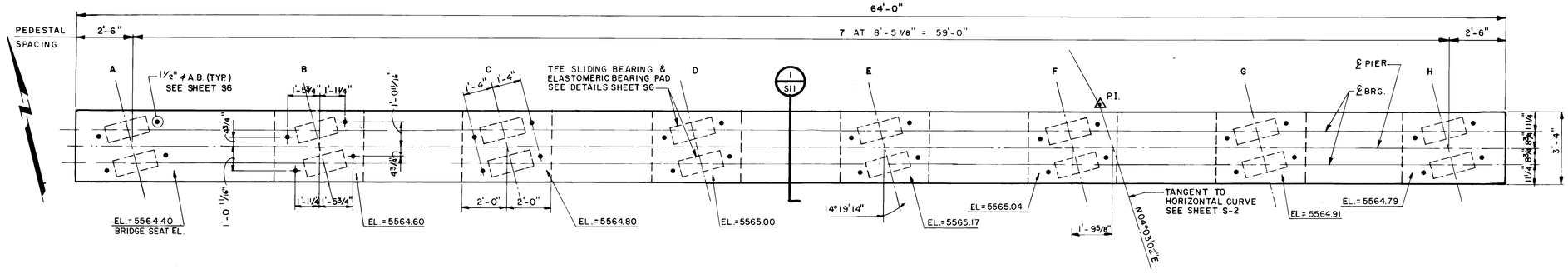

PLAN OF PIER CAP
3/8" = 1'-0"

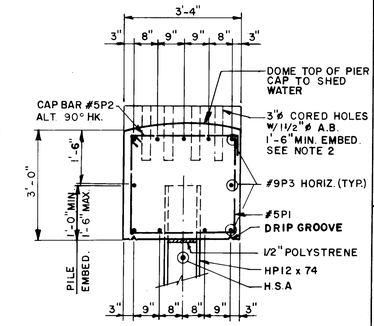

1 SECTION
1/2" = 1'-0"

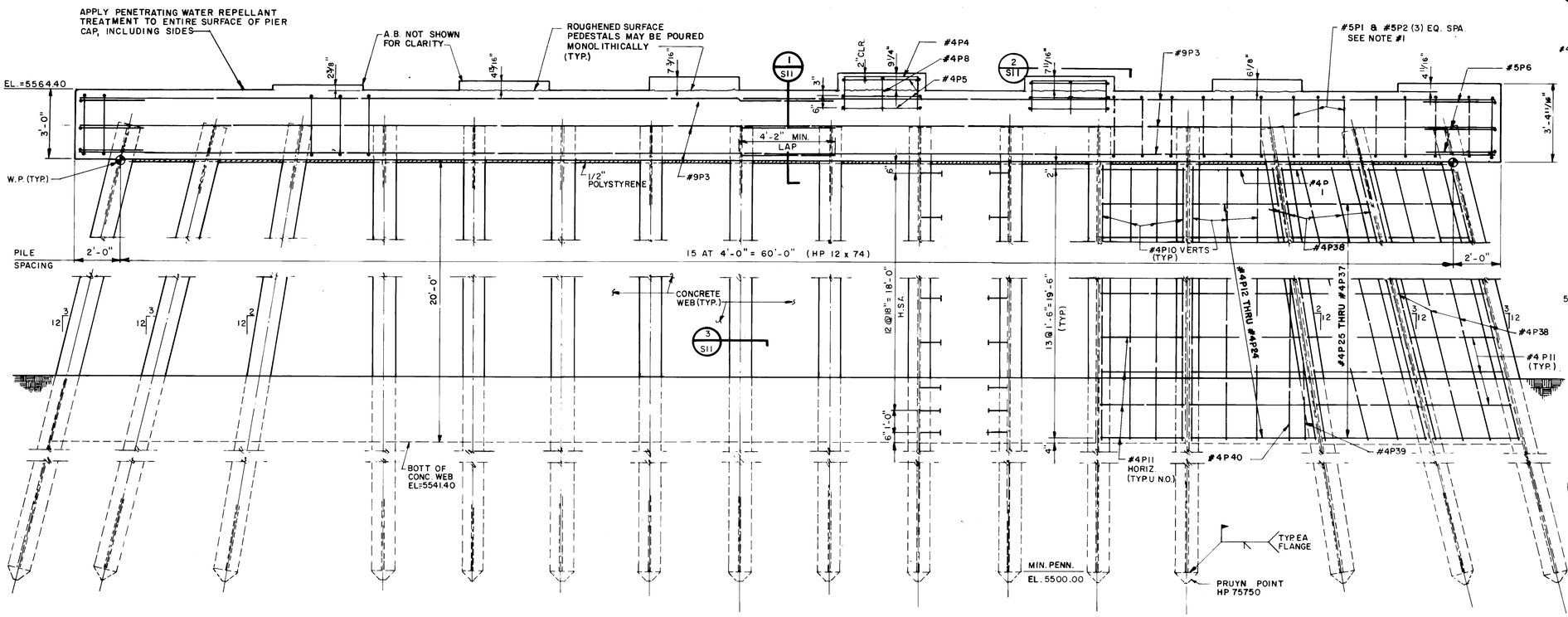

ELEVATION
3/8" = 1'-0"

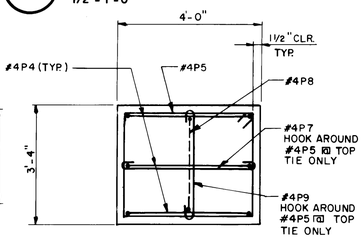

2 DETAIL
TYPICAL PEDESTAL PLAN @ LINE "C" THRU "H"
1/2" = 1'-0"

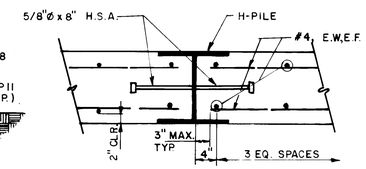

3 SECTION
TYP. CONC. WEB
1" = 1'-0"

NOTES - PIER

1. BEFORE THE PIER CAP IS POURED THE CONTRACTOR SHALL LOCATE THE POSITION OF ALL ANCHOR BOLTS. STIRRUP BARS SHALL BE RELOCATED AS REQUIRED SO AS TO PROVIDE A MINIMUM OF 2" CLEAR BETWEEN CORED HOLE & RE-BAR. DISREGARD THIS NOTE IF CAST IN PLACE ANCHORS ARE USED.

2. AT HIS OPTION, THE CONTRACTOR MAY USE CAST-IN-PLACE ANCHOR BOLTS OF THE SAME DIAMETER & LENGTH AS SHOWN ON S-6 EXCEPT THAT ALL ANCHORS SHALL HAVE A 4" HOOK. THESE ANCHORS SHALL BE SECURELY FASTENED & SET WITH A TEMPLATE IN THE EXACT LOCATION SHOWN. ADJUST STIRRUP LOCATIONS AS REQUIRED.

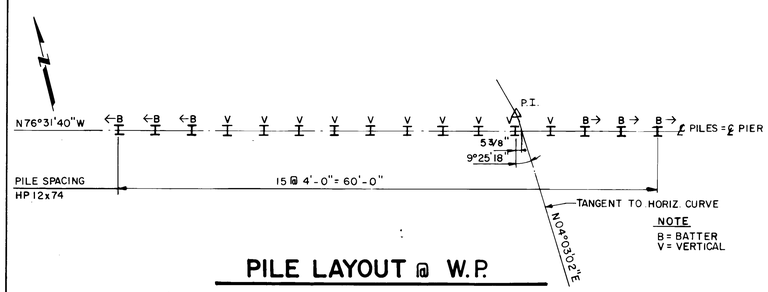

PILE LAYOUT @ W.P.

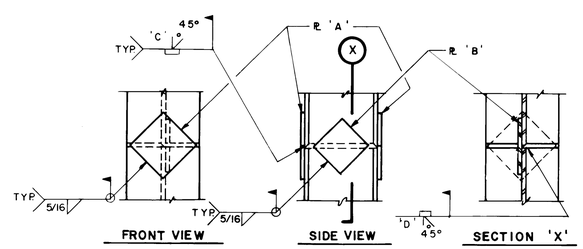

TABLE OF SPLICE ℄ DIMENSIONS & WELD SYMBOLS				
HP BEARING PILES	℄ "A"	℄ "B"	WELD "C"	WELD "D"
HP 10x57	1/2 x 6 1/2 x 6 1/2	1/2 x 5 1/2 x 5 1/2	1/2 @ 45°	1/2 @ 45°
HP 12x74	1/2 x 8 x 8	1/2 x 6 1/2 x 6 1/2	5/16 @ 45°	9/16 @ 45°

SPLICE PLATES SHALL BE A36 STEEL

FIELD SPLICE FOR STEEL BEARING PILES

AS BUILT INFORMATION

	DATE
CONTRACTOR	
WORK STAKED BY	
INSPECTORS ACCEPTANCE BY	
FIELD VERIFICATION BY	
DRAWINGS CORRECTED BY	

MICRO-FILM INFORMATION

	DATE
RECORDED BY	
NO.	

BENCH MARKS

SURVEY INFORMATION

NO.	F. BY	DATE

ENGINEER'S SEAL

MICHAEL S. MARTINEZ, REGISTERED PROFESSIONAL ENGINEER

NO.	DATE	REVISIONS	BY
1	12/87	AS BUILT TO DATE REMARKS	MSD

DESIGN

		DATE
DESIGNED BY	BMS	7-85
DRAWN BY	HMM	7-85
CHECKED BY		

BOVAY ENGINEERS, INC.
ALBUQUERQUE
HOUSTON • SPOKANE • AUSTIN • BATON ROUGE

CITY OF ALBUQUERQUE
MUNICIPAL DEVELOPMENT DEPARTMENT
ENGINEERING DIVISION

TITLE: TIJERAS ARROYO CROSSING AT FOUR HILLS ROAD

PIER

APPROVALS	ENGINEER	DATE	APPROVALS	ENGINEER	DATE
City Engineer		6/24/86	Liquid Waste	N.A.	6/11/86
~~A.C.E.~~ - Design		6/24/86	Traffic	N.A.	6/24/86
~~A.C.E.~~ - Hydrology		6/24/86	Water	N.A.	6/11/86
Parks	N/A				

DRAWING NO.	MAP NO.	SHEET	OF
1826	L-23-Z	S11	39

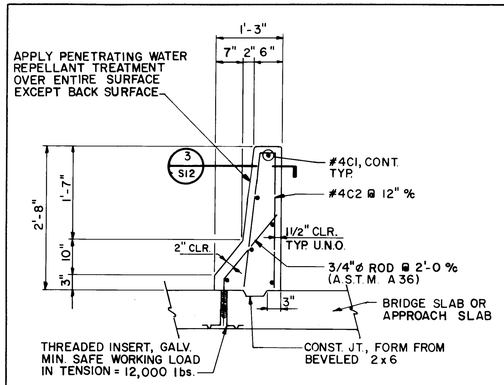

1 CONC. WALL BARRIER SECTION
3/4"= 1'-0"
REF : S5

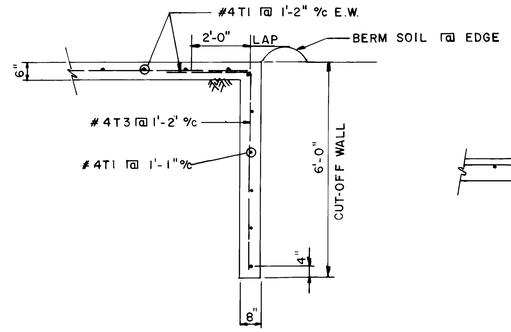

2 CUT-OFF WALL @ SLOPE PAVING
1/2"= 1'-0"
REF : S2

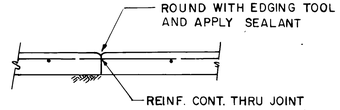

2a CONSTR. JT.- SLOPE PAVING
NO. SCALE
REF : S2

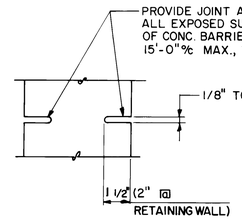

3 TRANSVERSE WEAKENED PLANE JOINT
NO SCALE

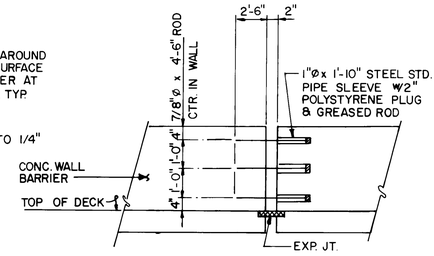

4 SLIP CONN. @ EXP. JOINT & ABUTMENTS
NO SCALE

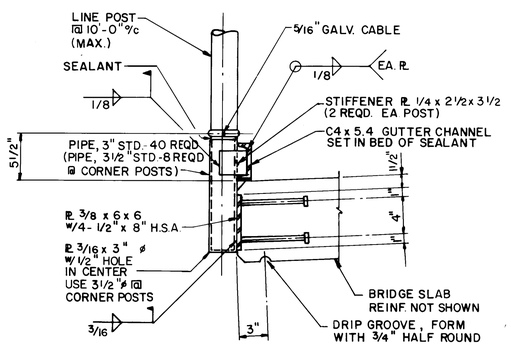

5 DETAIL
SEE STD. DWG K-21 FOR FENCE DETAILS
1-1/2"= 1'-0"
REF : S5

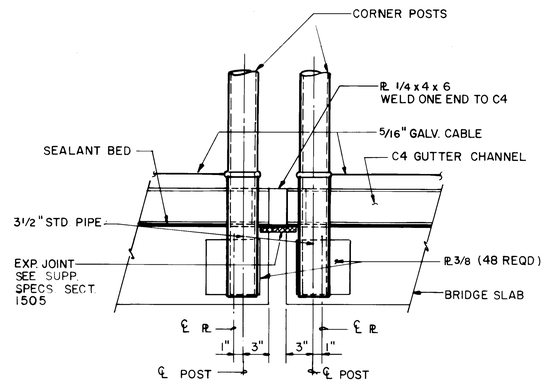

6 SECTION
1-1/2"= 1'-0"
REF : S5

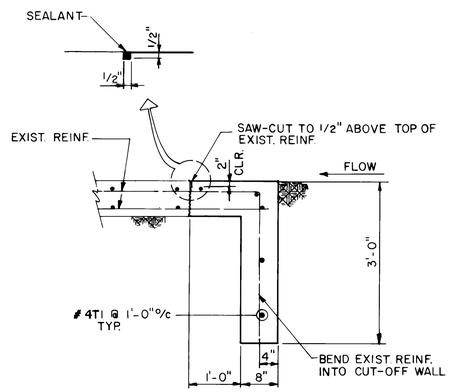

7 DETAIL
CUT-OFF WALL AT UPSTREAM END OF CONC. APRON
3/4"= 1'-0"
REF : S2

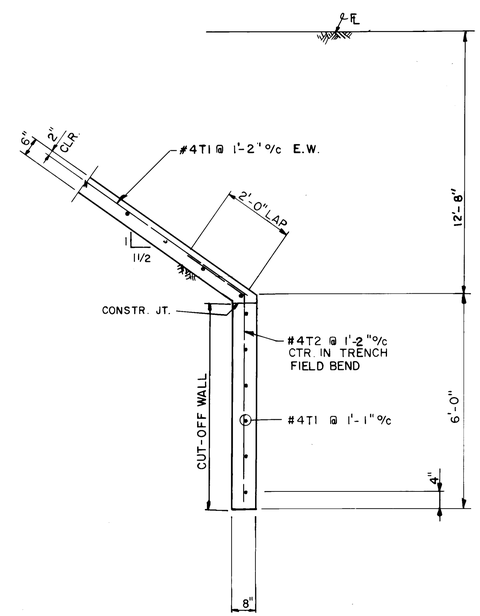

8 DETAIL
TYP. CUT-OFF WALL
1/2"= 1'-0"
REF : S2

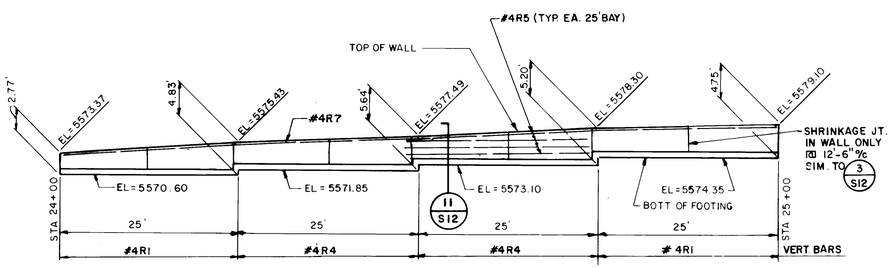

9 ELEVATION OF RETAINING WALL
1"= 10'

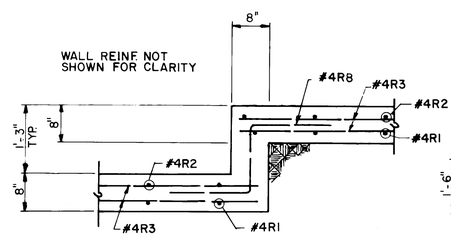

10 STEPPED FOOTING DETAIL
1/2"= 1'-0"

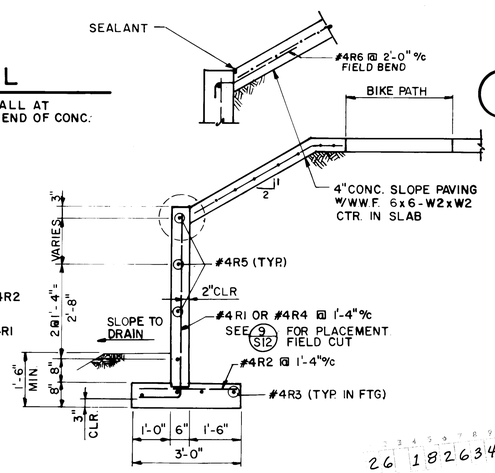

11 RETAINING WALL AT BIKE PATH
3/4"= 1'-0"

26 18263489

AS BUILT INFORMATION
CONTRACTOR
WORK STAKED BY — DATE
INSPECTOR'S ACCEPTANCE BY — DATE
FIELD VERIFICATION BY — DATE
DRAWINGS CORRECTED BY — DATE
MICRO-FILM INFORMATION
RECORDED BY — DATE
NO.

BENCH MARKS

SURVEY INFORMATION
FIELD NOTES
NO. | BY | DATE

ENGINEER'S SEAL

NO.	DATE	REMARKS	BY
		REVISIONS	
		DESIGN	

DESIGNED BY BMS — DATE 7-85
DRAWN BY HMM — DATE 7-85
CHECKED BY — DATE

BOVAY ENGINEERS, INC.
HOUSTON • SPOKANE • AUSTIN • BATON ROUGE

CITY OF ALBUQUERQUE
MUNICIPAL DEVELOPMENT DEPARTMENT
ENGINEERING DIVISION

TITLE: TIJERAS ARROYO CROSSING AT FOUR HILLS ROAD

MISCELLANEOUS DETAILS

APPROVALS	ENGINEER	DATE	APPROVALS	ENGINEER	DATE
City Engineer		6/24/86	Liquid Waste	N.A.	4/11/86
~~A.C.E.~~ - Design		6/24/86	Traffic	N.A.	6/24/86
~~A.C.E.~~ - Hydrology		6/24/86	Water	N.A.	4/11/86

DRAWING NO.	MAP NO.	SHEET	OF
1826	L-23-Z	S12	39

REINFORCING SCHEDULE FOR SUPERSTRUCTURE

DECK SLAB-SPAN 1

BAR NO.	TYPE	DIMENSIONS "A"	"B"	"C"	QUAN.	LENGTH	REMARKS
# 5S1	1				179	31'-8"	
# 5S2	1				179	37'-1"	
# 5S3 ☆	1				356	34'-5"	
# 3S7 ☆	1						DELETED
# 3S8 ☆	1				89	52'-0"	
# 3S9 ☆	1				87	38'-0"	
# 3S10 ☆	1				2	24'-0"	
# 4S11	1						DELETED
# 4S12	1				75	60'-0"	
# 4S13	1				73	30'-0"	
# 4S14	1				2	24'-0"	

DECK SLAB-SPAN 2

BAR NO.	TYPE	DIMENSIONS "A"	"B"	"C"	QUAN.	LENGTH	REMARKS
# 5S1	1				179	31'-8"	
# 5S4 ☆	1				356	34'-8"	
# 5S5	1				179	37'-7"	
# 5S6	1						DELETED
# 3S8 ☆	1				89	52'-0"	
# 3S9 ☆	1				87	38'-0"	
# 3S10 ☆	1				2	24'-0"	
# 4S12	1				75	60'-0"	
# 4S13	1				73	30'-0"	
# 4S14	1				2	24'-0"	

DIAPHRAGMS (TOTAL)

BAR NO.	TYPE	DIMENSIONS "A"	"B"	"C"	QUAN.	LENGTH	REMARKS
# 4D1	3	2'-9"	4½"	8"	210	7'-0"	
# 4D2	3	4'-2"	4½"	8"	84	9'-10"	
# 4D3	2	2'-8"	-	-	168	3'-6"	
# 4D4	1				84	6'-4"	
# 4D5	1				84	7'-5"	

APPROACH SLABS (2)

BAR NO.	TYPE	DIMENSIONS "A"	"B"	"C"	QUAN.	LENGTH	REMARKS
# 4AS1 ☆	1				60	33'-0"	
# 5AS2	1				60	33'-0"	
# 4AS3 ☆	1				126	14'-2"	
# 8AS4	5	14'-2"	11"	-	168	15'-1"	
# 4AS5	1				64	2'-0"	
# 5AS6 ☆	1				26	20'-2"	ATTENUATOR PAD
# 5AS7 ☆	1				22	4'-3"	ATTENUATOR PAD

CONCRETE WALL BARRIER

BAR NO.	TYPE	DIMENSIONS "A"	"B"	"C"	QUAN.	LENGTH	REMARKS
#4C1	1				48	45'-4"	ⓐ BRIDGE
#4C2	6	2'-4"	2½"		452	4'-9"	
#4C3	1				24	22'-2"	ⓐ APPROACHES

NOTE:

☆ = DENOTES EPOXY-COATED REBARS. REBAR FABRICATOR SHALL VERIFY REINFORCING BAR SCHEDULE.

REINFORCING SCHEDULE FOR SUBSTRUCTURE

ABUTMENT NO. 1

BAR NO.	TYPE	DIMENSIONS "A"	"B"	"C"	QUAN.	LENGTH	REMARKS
#10A1	2	40'-0"	-	-	8	41'-6"	
# 8A2	2	42'-0"	-	-	4	43'-3"	
# 8A3	2	27'-6"	-	-	4	28'-9"	
#10A4	2	31'-9"	-	-	8	33'-5"	
# 5A5	8	3'-7¾"	8"	3'-8¼"	46	12'-2"	
# 5A6	7	3'-8⅞"	8"	-	46	4'-10"	
# 5A7	1				36	1'-10"	
# 4A8	9	1'-10½"	6½"	2'-8¾"	18	10'-1 9/16"	
#4A9	9	4'-4"	6½"	1'-10¾"	37	13'-4 9/16"	
#4A10	2	2'-5"	-	-	38	3'-1"	
#4A11	1				21	5'-10"	
#4A12	1				14	7'-5"	
#5A13	1				14	5'-0"	
#4A14	10	1'-9½"	1'-8"	4¾"	3	5'-1"	
#4A15	10	1'-9½"	2'-4"	4¾"	2	6'-5"	
#4A16	10	1'-9½"	1'-2"	4¾"	2	4'-1"	

ABUTMENT NO. 2

BAR NO.	TYPE	DIMENSIONS "A"	"B"	"C"	QUAN.	LENGTH	REMARKS
# 10A1	2	40'-0"	-	-	4	41'-6"	▲
# 8A2	2	42'-0"	-	-	2	43'-3"	▲
# 5A5	8	3'-7¾"	8"	3'-8¼"	49	12'-2"	▲
# 5A6	7	3'-8⅞"	8"	-	49	4'-10"	▲
# 5A7	1				30	1'-10"	
# 4A8	9	1'-10½"	6½"	2'-8¾"	15	10'-1 9/16"	
# 4A9	9	4'-4"	6½"	1'-10¾"	37	13'-4 9/16"	
#4A10	2	2'-5"	-	-	38	3'-1"	
#4A11	1				21	5'-10"	
#4A12	1				14	7'-5"	
#5A13	1				14	5'-0"	
#10A17	2	32'-10"			4	34'-5"	▲
# 8A18	2	28'-7"			2	29'-10"	▲
# 4A19	10	1'-9½"	2'-11"	6¼"	2	7'-7"	
# 4A20	10	1'-9½"	2'-2"	6¼"	3	6'-1"	
# 4A21	10	1'-9½"	1'-8"	6¼"	2	5'-1"	
# 4A22	10	1'-9½"	10"	6¼	2	3'-5"	
#10A1R	2	42'-3"			4	43'-9"	▲
#8A2R	2	44'-3"			2	45'-6"	▲
#10A17R	2	35'-1"			4	36'-8"	▲
# 8A18R	2	30'-10"			2	32'-1"	▲

PIER

BAR NO.	TYPE	DIMENSIONS "A"	"B"	"C"	QUAN.	LENGTH	REMARKS
#5P1	8	2'-8¾"	8"	3'-0⅞"	52	9'-8"	
#5P2	7	3'-0¾"	8"	-	52	4'-2"	
#9P3	1	-	-	-	22	34'-0"	
#4P4	11	1'-7"	3'-7½"	-	18	6'-8"	
#4P5	9	3'-0½"	6½"	3'-8¾"	18	14'-6"	
#5P6	11	1'-8"	3'-0½"	-	6	6'-3"	
#4P7	12	3'-9¾"	6"	-	6	4'-11"	
#4P8	11	1'-7"	2'-10½"	-	6	5'-11"	
#4P9	12	3'-1¾"	6"	-	6	4'-3"	
#4P10	1	-	-	-	84	19'-7"	
#4P11	1	-	-	-	316	3'-6"	
#4P12 THRU #4P24	1				4EA	3'-9" BY 3" 6'-9"	LENGTHS ARE FOR ESTIMATES ONLY AND MAY HAVE TO BE FIELD CUT
#4P25 THRU #4P37	1				4EA	3'-7½" BY 11½" 5'-11½"	
#4P38	1	-	-	-	36	20'-2"	
#4P39	1	-	-	-	4	6'-8"	
#4P40	1	-	-	-	4	13'-4"	

WINGWALLS AT ABUTMENT NO. 1

BAR NO.	TYPE	DIMENSIONS "A"	"B"	"C"	QUAN.	LENGTH	REMARKS
#8W1	1				14	12'-7"	
#8W2	1				14	12'-10"	
#5W3	8	3'-7"	8"	2'-2½"	20	10'-7"	
#5W4	7	2'-2 3/16"	8"	-	20	3'-4 3/16"	
#6W5	1	-	-	-	4	1'-8"	GRADE 40
#4W6	1	-	-	-	26	7'-0"	GRADE 40
#5W7	1				26	7'-3"	GRADE 40
#4W8	1				28	15'-6"	
#3W9	4	1'-2 5/8"	6½"	4"	34	3'-0"	
#4W10	1				8	5'-11"	E. WINGWALL
#4W11	1				8	5'-5"	W. WINGWALL

WINGWALLS AT ABUTMENT NO. 2

BAR NO.	TYPE	DIMENSIONS "A"	"B"	"C"	QUAN.	LENGTH	REMARKS
#8W1	1				24	12'-7"	▲
#8W2	1				20	12'-10"	▲
#5W3	8	3'-5"	8"	2'-3"	28	10'-5"	▲
#5W4	7	2'-3"	8"	-	28	3'-4 11/16"	▲
#6W5	1	-	-	-	4	1'-8"	GRADE 40
#4W6	1	-	-	-	26	7'-0"	GRADE 40
#5W7	1	-	-	-	26	7'-3"	GRADE 40
#4W8	1				26	15'-6"	
#3W9	4	1'-2 5/8"	6½"	4	34	3'-0"	
#4W12	1				8	5'-2"	E. WINGWALL
#4W13	1				8	4'-11"	W. WINGWALL
#8W14	11	3'-7"	4'-6"	-		11'-5"	▲

RETAINING WALL

BAR NO.	TYPE	DIMENSIONS "A"	"B"	"C"	QUAN	LENGTH	REMARKS
# 4R1	2	4'-5"			40	5'-6"	
# 4R2	1				80	2'-8"	
# 4R3	1				16	25'-4"	
# 4R4	2	5'-3"			40	6'-4"	
# 4R5	1				12	26'-0"	
# 4R6	2	2'-0"			51	2'-8"	
# 4R7	1				2	50'-10"	
# 4R8	13	2'-0"			12	5'-2"	

SLOPE PAVING

BAR NO.	TYPE	DIMENSIONS "A"	"B"	"C"	QUAN	LENGTH	REMARKS
#4T1	1				825	60'-0"	FIELD CUT
#4T2	1				460	7'-6"	FIELD BEND
#4T3	2	5'-6"			170	7'-6"	

BAR NO.	TYPE	DIMENSIONS "A"	"B"	"C"	QUAN	LENGTH	REMARKS

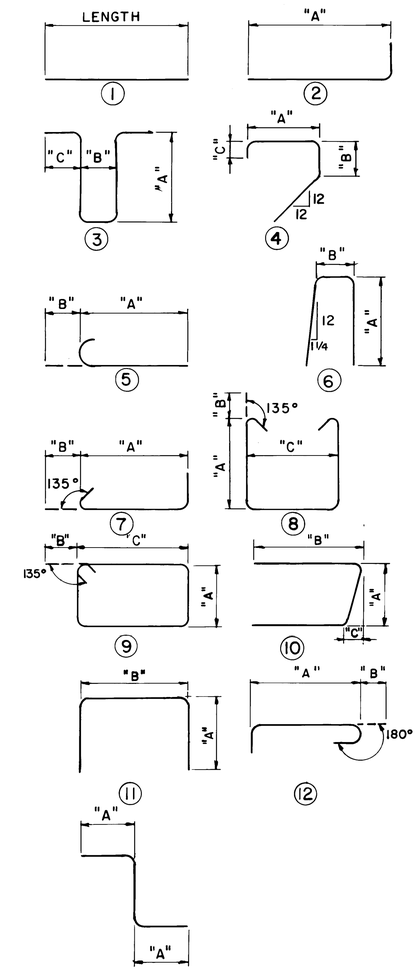

BAR TYPES

NOTE:
ALL DIMENSIONS ARE TO CENTER OF BARS EXCEPT TYPES 5, 7, 8, 9 & 12, WHERE "B" IS MEASURED TO THE OUTSIDE OF THE BAR. ALL BARS ARE GRADE 60 (U.N.O.)

MINIMUM BEND RADII **		
BAR SIZE	MAIN REINF.	STIRRUPS & TIES
3	1 5/16"	1 1/8"
4	1¾"	1½"
5	2 3/16"	1 7/8"
6	2⅝"	
7	3 1/16"	
8	3½"	
9	5 3/16"	
10	6"	

NOTE:
** = RADIUS MEASURED TO CENTER OF REBAR.

NOTE:
▲ = ITEMS CHANGED DUE TO ABUTMENT NO. 2 REDESIGN

26 18263589

SOVAY ENGINEERS, INC.
ALBUQUERQUE
HOUSTON • SPOKANE • AUSTIN • BATON ROUGE

CITY OF ALBUQUERQUE
MUNICIPAL DEVELOPMENT DEPARTMENT
ENGINEERING DIVISION

TITLE: TIJERAS ARROYO CROSSING AT FOUR HILLS ROAD

REINFORCING BAR SCHEDULE

APPROVALS	ENGINEER	DATE	APPROVALS	ENGINEER	DATE
City Engineer		6/24/86	Liquid Waste	N.A. Rivera	8/11/86
~~A.C.E.~~ - Design		6/24/86	Traffic	D.A. Duffy	6/24/86
~~A.C.E.~~ - Hydrology		6/24/86	Water	N.A. Rivera	8/11/86
Parks	N/A				

DRAWING NO.	MAP NO.	SHEET	OF
1826	L-23-Z	S13	39

AS BUILT INFORMATION
CONTRACTOR
WORK STAKED BY — DATE
WORK INSPECTED — DATE
ACCEPTANCE BY — DATE
FIELD VERIFICATION BY — DATE
DRAWINGS CORRECTED BY — DATE
MICRO-FILM INFORMATION
RECORDED BY — DATE
NO.

BENCH MARKS

SURVEY INFORMATION
FIELD NOTES

NO.	BY	DATE

ENGINEER'S SEAL
MICHAEL SHERMAN WEBB
REGISTERED PROFESSIONAL ENGINEER
NEW MEXICO
8416
7-8-85

NO.	DATE	REVISIONS	BY
1	2-9-87	REDESIGN ABUTMENT NO.2	A.S.
		REMARKS	
		DESIGN	

DESIGNED BY BMS — DATE 7-85
DRAWN BY HMM — DATE 7-85
CHECKED BY — DATE

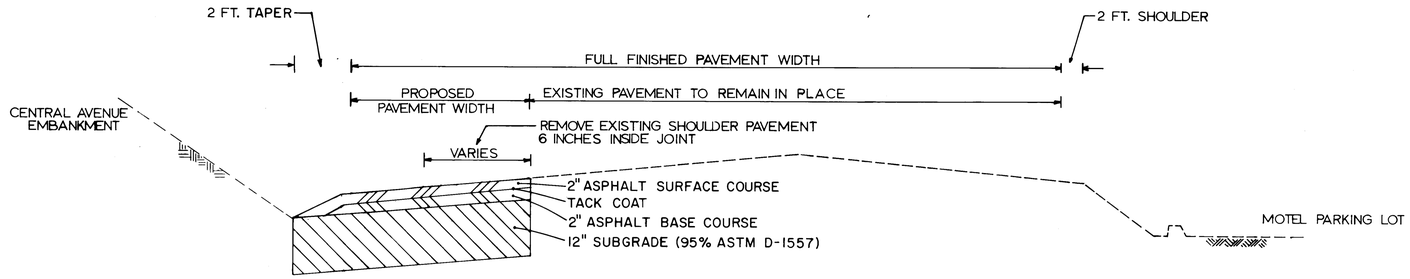

TYPICAL SECTION AT FRONTAGE ROAD

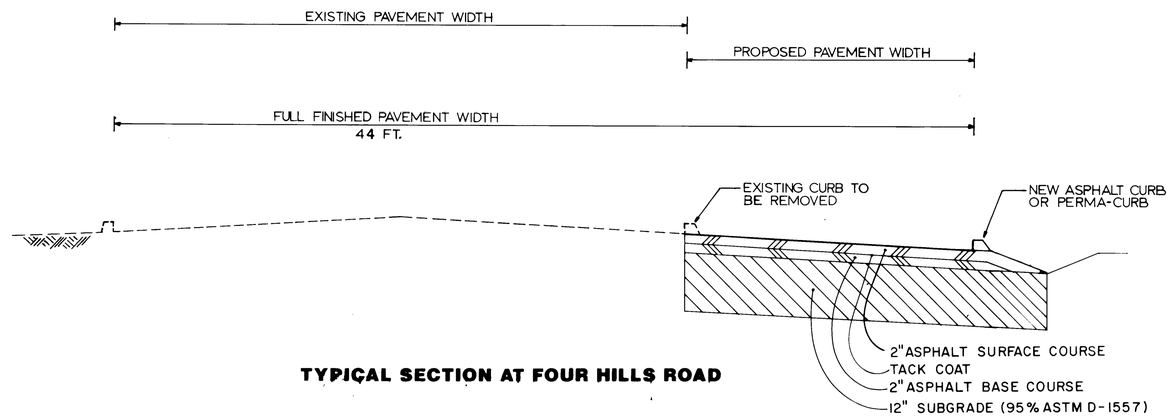

TYPICAL SECTION AT FOUR HILLS ROAD

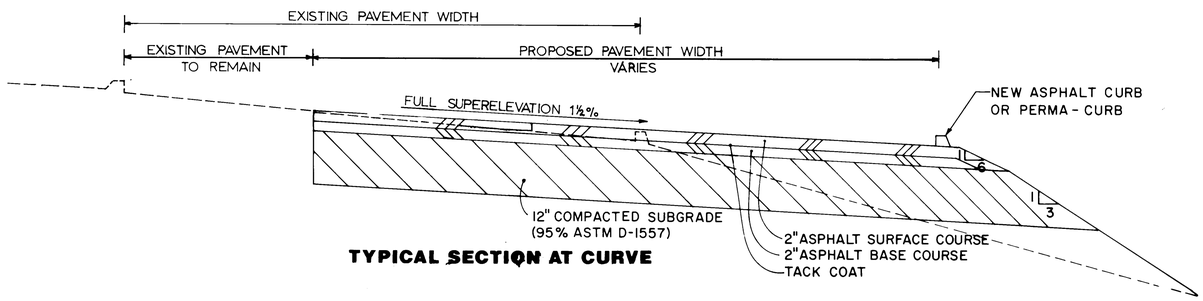

TYPICAL SECTION AT CURVE

26 1826 3689

AS BUILT INFORMATION

CONTRACTOR
WORK STAKED BY — DATE
INSPECTOR'S ACCEPTANCE BY — DATE
FIELD VERIFICATION BY — DATE
DRAWINGS CORRECTED BY — DATE
MICRO-FILM INFORMATION
RECORDED BY — DATE
NO.

BENCH MARKS

SURVEY INFORMATION

NO.	FIELD NOTES BY	DATE

ENGINEER'S SEAL

REVISIONS

NO.	DATE	REMARKS	BY

DESIGN
DESIGNED BY — DATE
DRAWN BY — DATE
CHECKED BY — DATE

BOVAY ENGINEERS, INC.
ALBUQUERQUE
HOUSTON • AUSTIN • BATON ROUGE

CITY OF ALBUQUERQUE
PUBLIC WORKS DEPARTMENT
ENGINEERING GROUP

TITLE: TIJERAS ARROYO CROSSING AT FOUR HILLS ROAD

FOUR HILLS ROAD REALIGNMENT - TYPICAL SECTIONS

APPROVALS	ENGINEER	DATE	APPROVALS	ENGINEER	DATE
D.R.C. Chair					
Trans. Dev.					
Utility Dev.					

DRAWING NO. 1826 | MAP NO. | SHEET R1 OF 10

36

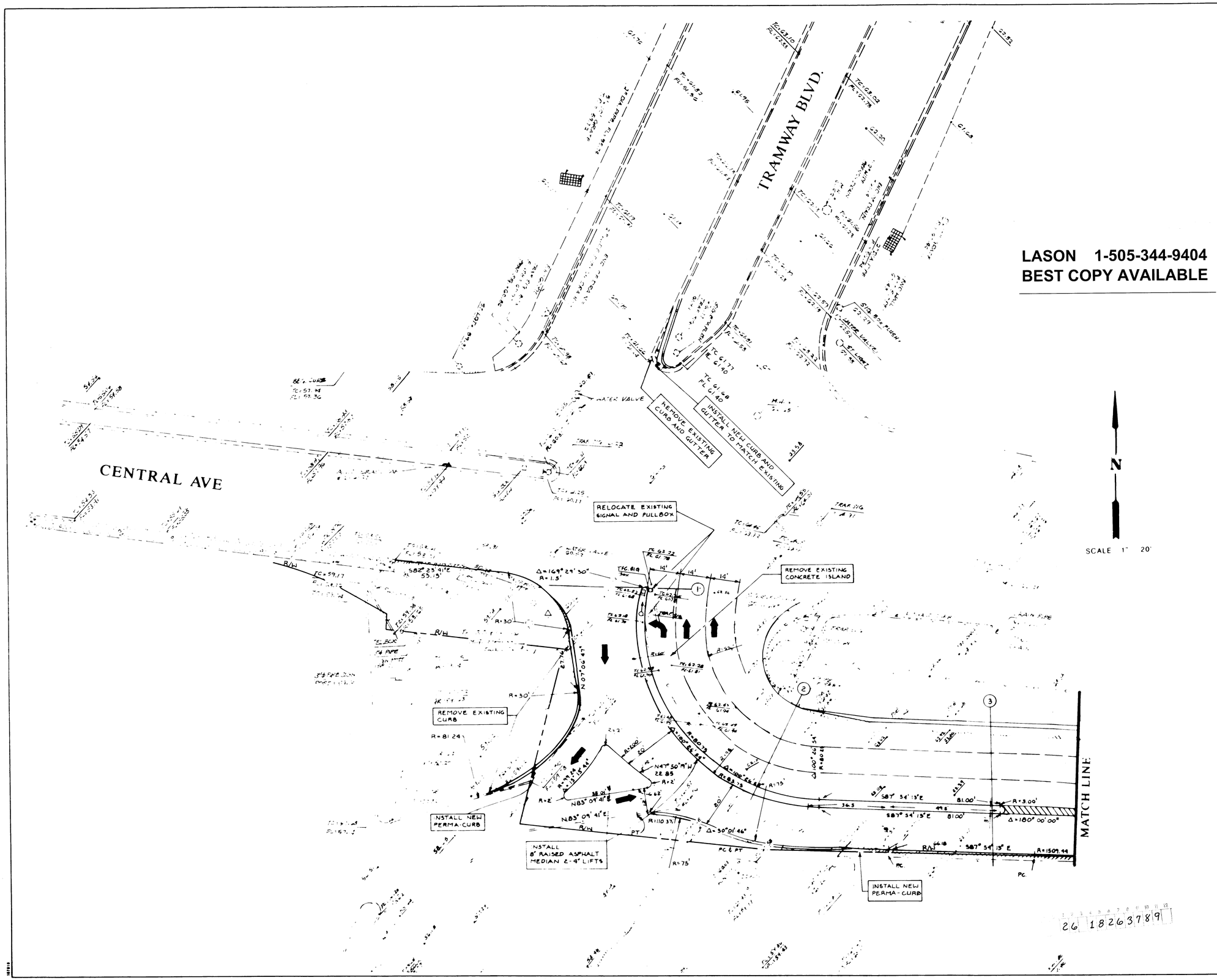

AS BUILT INFORMATION	
CONTRACTOR	
WORK STAKED BY	DATE
INSPECTOR'S ACCEPTANCE BY	DATE
FIELD CERTIFICATION BY	DATE
OFFICE CORRECTED BY	DATE
MICRO-FILM INFORMATION	
RECORDED BY	DATE
NO	

BENCH MARKS

SURVEY INFORMATION		
FIELD NOTES		
NO.	BY	DATE

ENGINEER'S SEAL

NO	DATE	REMARKS	BY
		REVISIONS	

DESIGN

DESIGNED BY ____ DATE ____
DRAWN BY ____ DATE ____
CHECKED BY ____ DATE ____

BOVAY ENGINEERS, INC.

CITY OF ALBUQUERQUE
PUBLIC WORKS DEPARTMENT
ENGINEERING GROUP

TITLE: TIJERAS ARROYO CROSSING AT FOUR HILLS ROAD

FOUR HILLS ROAD REALIGNMENT - PLAN

APPROVALS	ENGINEER	DATE	APPROVALS	ENGINEER	DATE
D.R.C. Chair					
Trans. Dev.					
Utility Dev.					

DRAWING NO. 1826 | MAP NO. | SHEET R2 OF 10

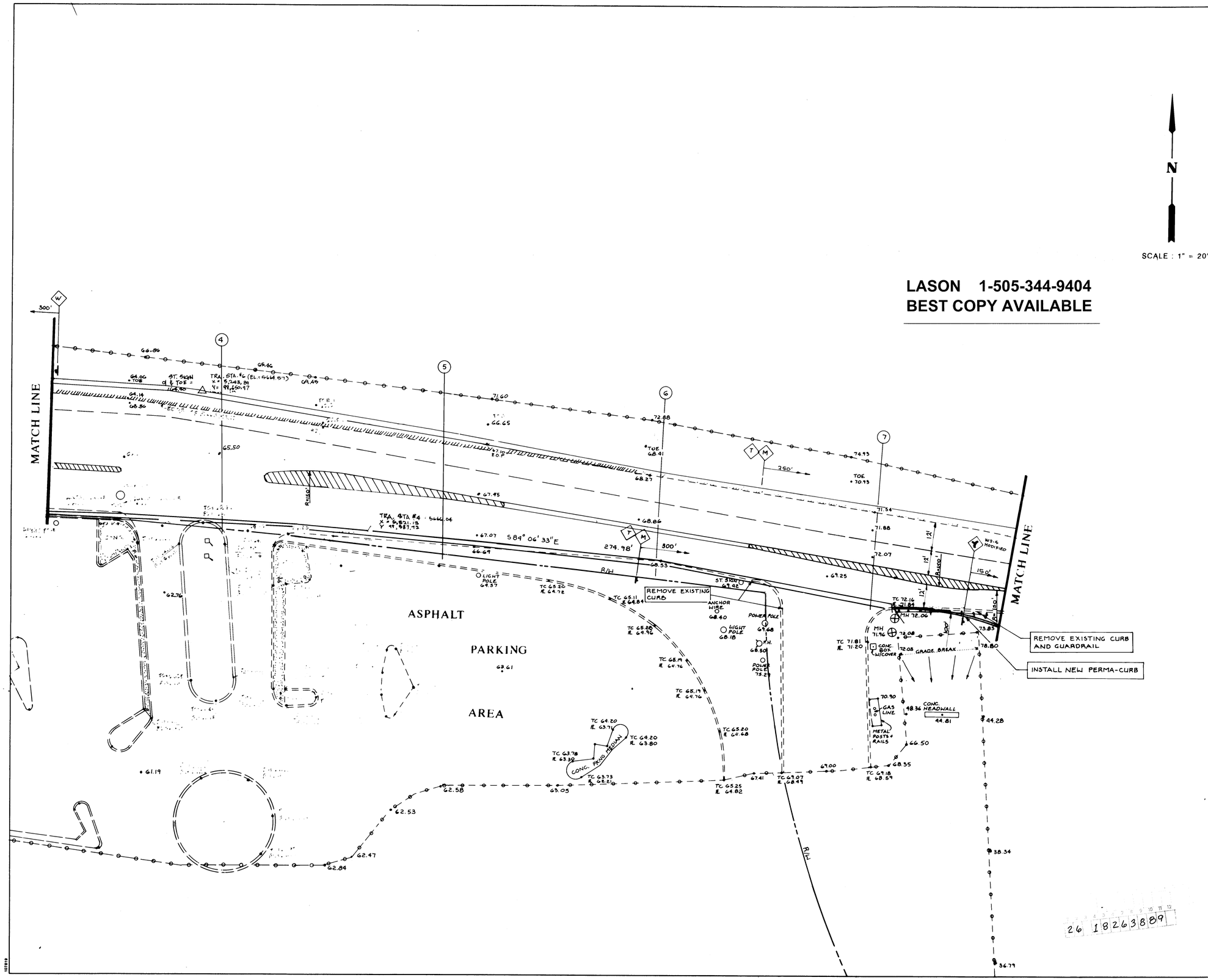

LASON 1-505-344-9404
BEST COPY AVAILABLE

AS BUILT INFORMATION	
CONTRACTOR	
WORK STAKED BY	DATE
INSPECTOR'S ACCEPTANCE BY	DATE
FIELD VERIFICATION BY	DATE
DRAWINGS CORRECTED BY	DATE
MICRO-FILM INFORMATION	
RECORDED BY	DATE
NO.	

BENCH MARKS

SURVEY INFORMATION

FIELD NOTES

NO.	BY	DATE

ENGINEER'S SEAL

NO.	DATE	REMARKS	BY
		REVISIONS	

DESIGNED BY DATE
DRAWN BY DATE
CHECKED BY DATE

BOVAY ENGINEERS, INC.
HOUSTON · AUSTIN · ALBUQUERQUE · BATON ROUGE

CITY OF ALBUQUERQUE
PUBLIC WORKS DEPARTMENT
ENGINEERING GROUP

TITLE: TIJERAS ARROYO CROSSING AT FOUR HILLS ROAD

FOUR HILLS ROAD REALIGNMENT - PLAN

APPROVALS	ENGINEER	DATE	APPROVALS	ENGINEER	DATE
D.R.C. Chair					
Trans. Dev.					
Utility Dev.					

DRAWING NO.	MAP NO.	SHEET	OF
1826		R3	10

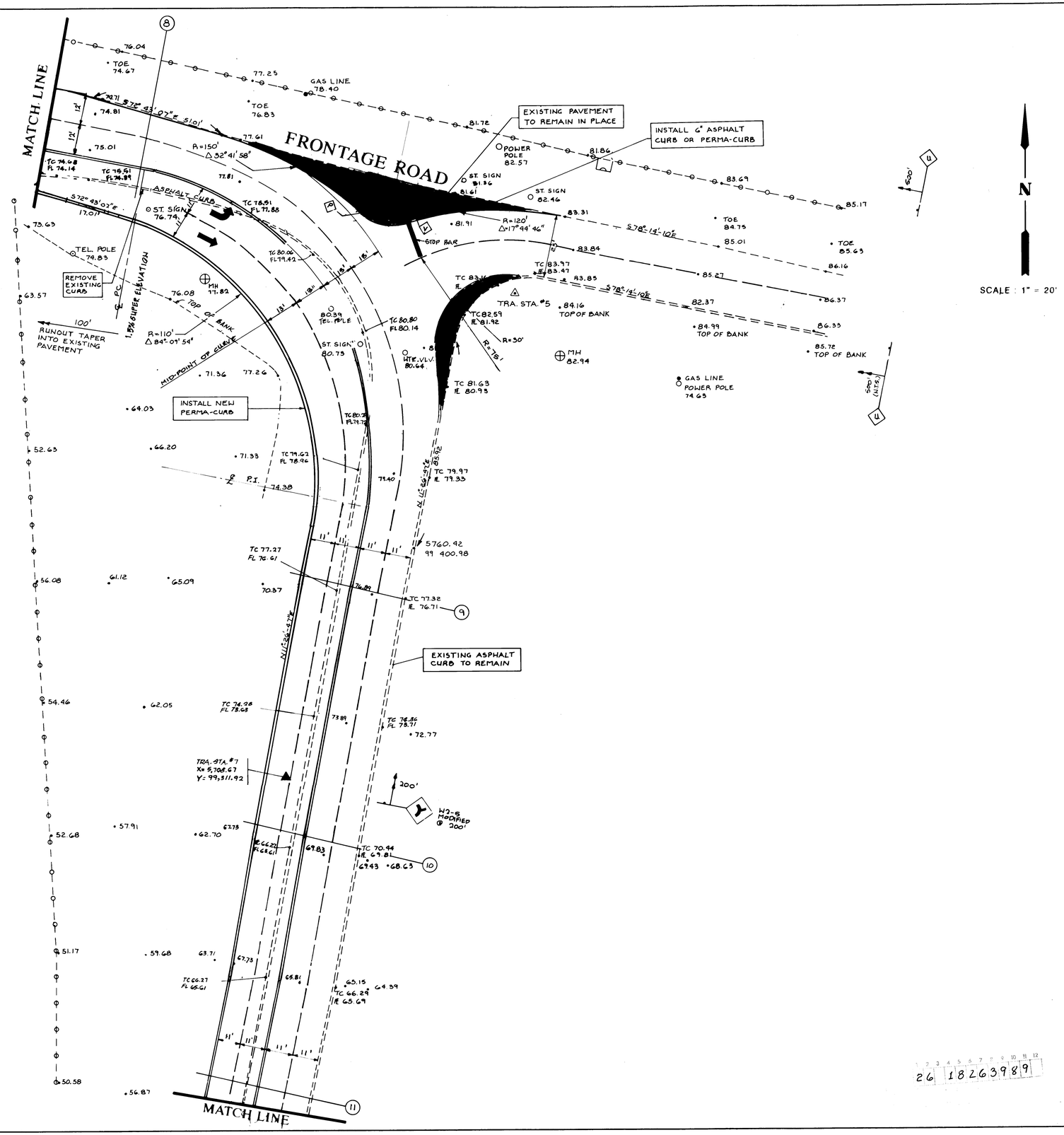

AS BUILT INFORMATION	
CONTRACTOR	
WORK STAKED BY	DATE
INSPECTOR'S CHECKS	
ACCEPTANCE BY	DATE
FIELD VERIFICATION BY	DATE
DRAWINGS CORRECTED BY	DATE
MICRO-FILM INFORMATION	
RECORDED BY	DATE
NO.	

BENCH MARKS

SURVEY INFORMATION

FIELD NOTES

NO.	BY	DATE

ENGINEER'S SEAL

NO.	DATE	REMARKS	BY

REVISIONS

DESIGN

DESIGNED BY DATE
DRAWN BY DATE
CHECKED BY DATE

SOVAY ENGINEERS, INC.
HOUSTON · AUSTIN · ALBUQUERQUE · BATON ROUGE

CITY OF ALBUQUERQUE
PUBLIC WORKS DEPARTMENT
ENGINEERING GROUP

TITLE: TIJERAS ARROYO CROSSING AT FOUR HILLS ROAD

FOUR HILLS ROAD REALIGNMENT - PLAN

APPROVALS	ENGINEER	DATE	APPROVALS	ENGINEER	DATE
D.R.C. Chair					
Trans. Dev.					
Utility Dev.					

DRAWING NO. 1826 | MAP NO. | SHEET R4 OF 10

26 18263989

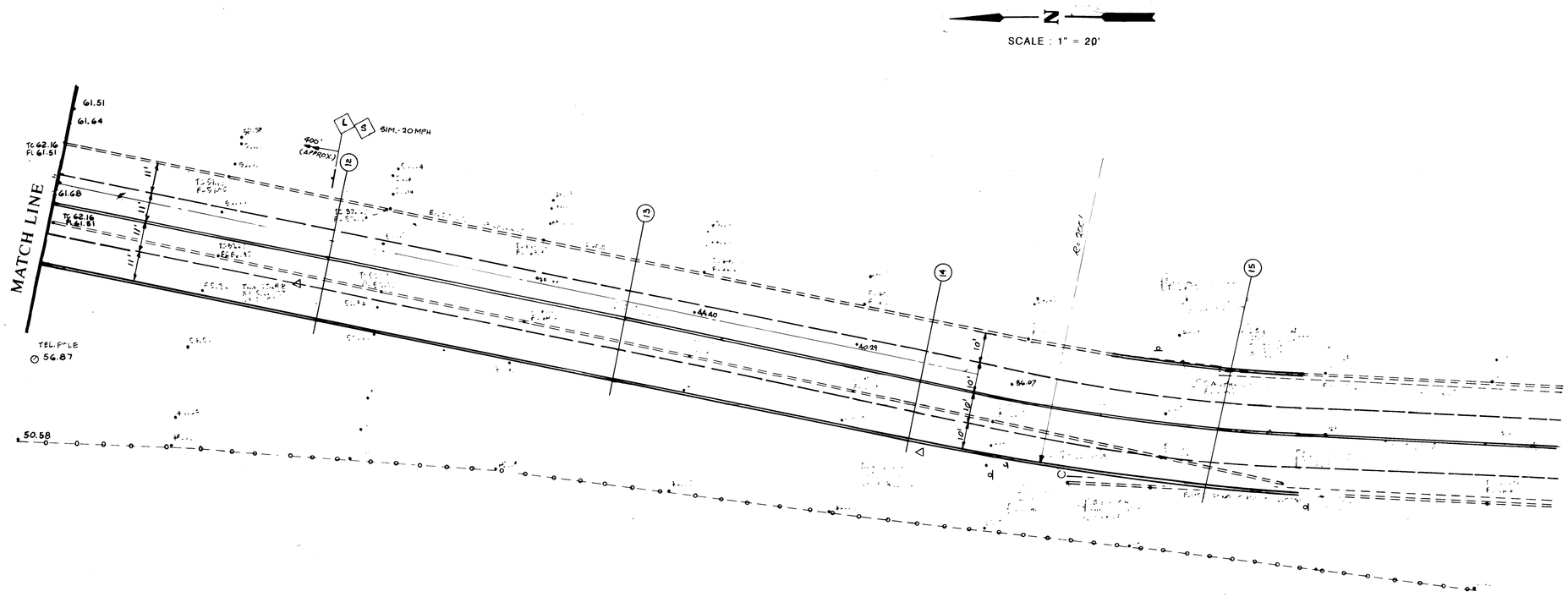

LASON 1-505-344-9404
BEST COPY AVAILABLE

26 18264089

AS BUILT INFORMATION

CONTRACTOR
WORK STAKED BY — DATE
INSPECTOR'S ACCEPTANCE BY — DATE
FIELD VERIFICATION BY — DATE
DRAWINGS CORRECTED BY — DATE
MICRO-FILM INFORMATION
RECORDED BY — DATE
NO

BENCH MARKS

SURVEY INFORMATION
FIELD NOTES

NO.	BY	DATE

ENGINEER'S SEAL

REVISIONS

NO.	DATE	REMARKS	BY

DESIGN
DESIGNED BY — DATE
DRAWN BY — DATE
CHECKED BY — DATE

BOVAY ENGINEERS, INC.
ALBUQUERQUE
HOUSTON • AUSTIN • BATON ROUGE

CITY OF ALBUQUERQUE
PUBLIC WORKS DEPARTMENT
ENGINEERING GROUP

TITLE: TIJERAS ARROYO FOUR HILLS CROSSING
FOUR HILLS ALIGNMENT - PLAN

APPROVALS	ENGINEER	DATE	APPROVALS	ENGINEER	DATE
D.R.C. Chair					
Trans. Dev.					
Utility Dev.					

DRAWING NO. 1826 | MAP NO. | SHEET R5 OF 10

40

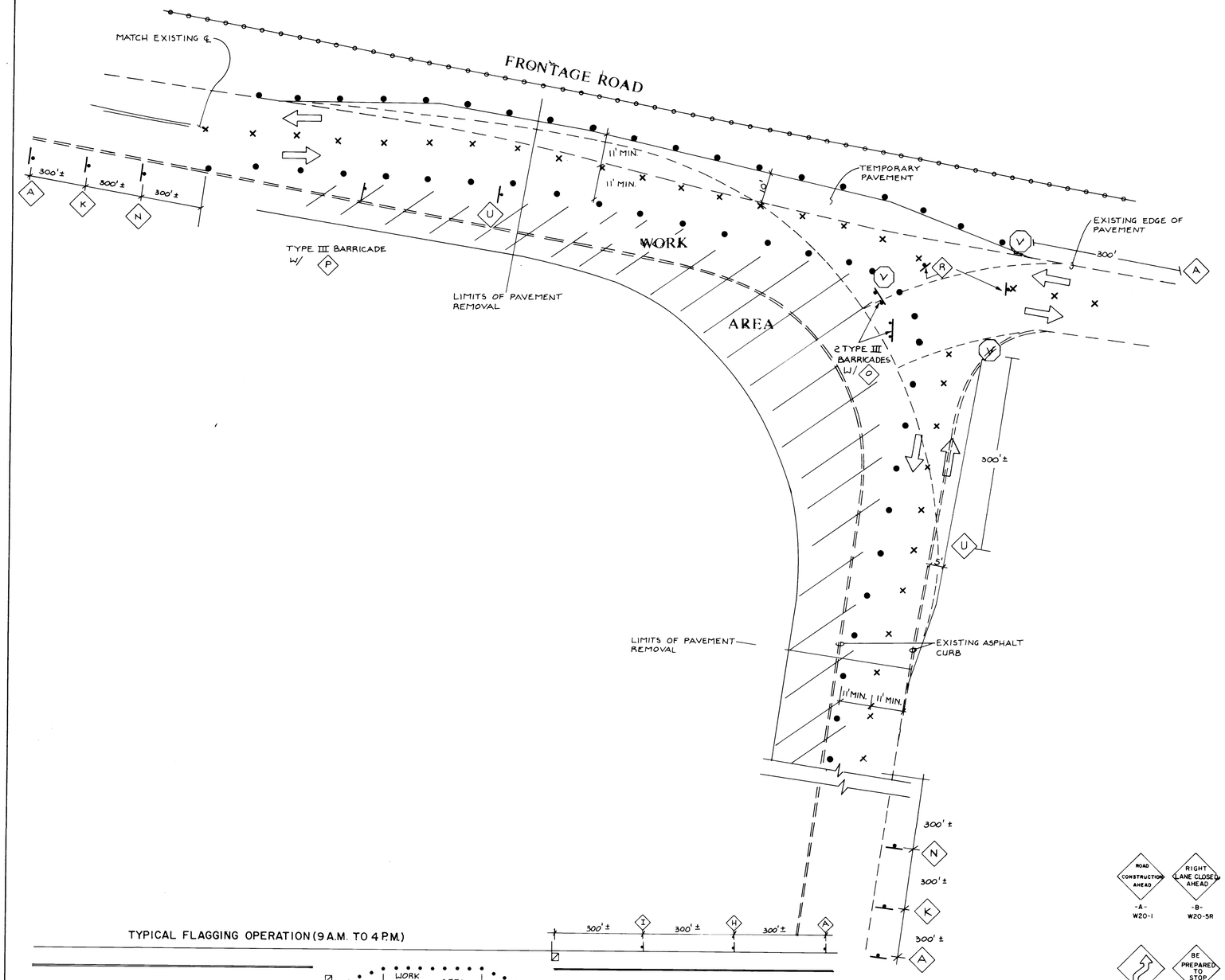

NOT TO SCALE

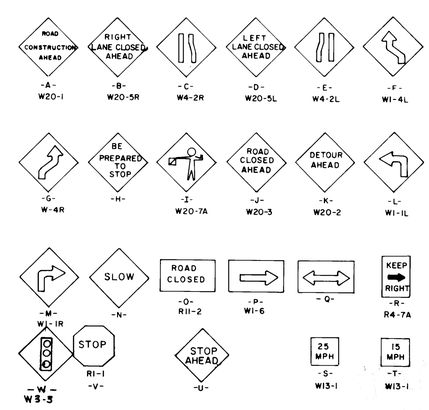

TRAFFIC CONTROL NOTES

1. Contractor must comply with Section 19 of Albuquerque Standard Specs. for Public Works Construction.

2. Contractor must maintain two 11 foot lanes on 4 Hills Road and the Frontage Road at all times. Lane closures shall be limited to 9 A.M. to 4 P.M.

3. The installation of additional pavement on the frontage road between Central and 4 Hills Road shall be accomplished without disrupting the existing traffic flow pattern.

4. Contractor must notify Traffic Engineering five working days prior to completion of project so that final striping can be coordinated. Contractor must maintain the existing traffic pattern through barricading until the final striping has been completed or five working days after notice of completion date.

5. All barricades and vertical panels must have lights as per Section 19 of the Standard Specifications.

6. Construction of the intersection of 4 Hills and the Frontage Rd. shall be accomplished in three phases so that two-way traffic can be maintained on all roads at all times.

Phase 1. Contractor shall install temporary asphalt and shift traffic as shown in the plan set. Temporary asphalt is required on 4 Hills Road in order to maintain two-way traffic in up-coming phases. Construct the southwest section of the new alignment. Install all additional pavement required on 4 Hills Road between the bridge and the Frontage Road.

Phase 2. Route traffic on the completed section of new alignment as shown. Shift the traffic from the Frontage Road east of the intersection north, creating a work are for the southeast quardant of the intersection. Construct the south quardrant of the new alignment. See phase 2. Barricades and vertical panels shall be spaced at a maximum of 10 feet when with in 100 feet of the new curve.

Phase 3. Shift traffic on the Frontage Road east of the intersection south, so that the remaining portion of the new intersection can be completed. Traffic on 4 Hills Road will remain the same as in phase 2.

AS BUILT INFORMATION

CONTRACTOR	
WORK STAKED BY	DATE
INSPECTORS ACCEPTANCE BY	DATE
FIELD VERIFICATION BY	DATE
DRAWINGS CORRECTED BY	DATE
MICRO-FILM INFORMATION	
RECORDED BY	DATE
NO.	

BENCH MARKS

SURVEY INFORMATION

FIELD NOTES

NO.	BY	DATE

ENGINEER'S SEAL

REVISIONS

NO.	DATE	REMARKS	BY

DESIGN

DESIGNED BY	DATE
DRAWN BY	DATE
CHECKED BY	DATE

BOVAY ENGINEERS, INC.
HOUSTON · AUSTIN · ALBUQUERQUE · BATON ROUGE

CITY OF ALBUQUERQUE
PUBLIC WORKS DEPARTMENT
ENGINEERING GROUP

TITLE: TIJERAS ARROYO CROSSING AT FOUR HILLS ROAD

FOUR HILLS ROAD REALIGNMENT - TRAFFIC CONTROL PLAN

APPROVALS	ENGINEER	DATE	APPROVALS	ENGINEER	DATE
D.R.C. Chair					
Trans. Dev.					
Utility Dev.					

DRAWING NO. 1826 | MAP NO. | SHEET R6 OF 10

26 1826418 9

107819

41

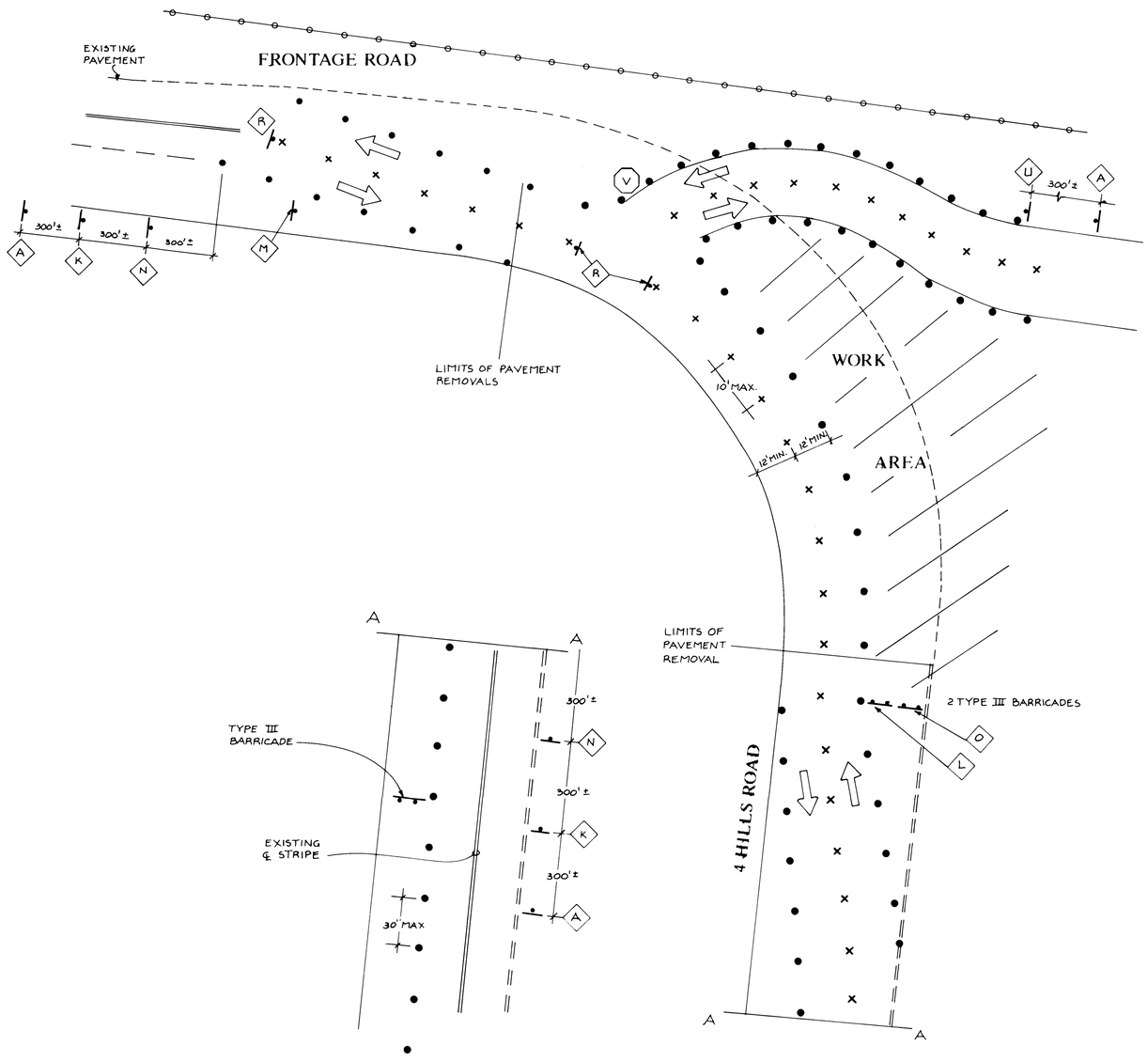

N

NOT TO SCALE

26 18264289

AS BUILT INFORMATION

CONTRACTOR
WORK STAKED BY
INSPECTORS
ACCEPTANCE BY
DATE
FIELD VERIFICATION BY
DRAWINGS CORRECTED BY
DATE
MICRO-FILM INFORMATION
RECORDED BY
DATE
NO.

BENCH MARKS

SURVEY INFORMATION

FIELD NOTES

NO.	BY	DATE

ENGINEER'S SEAL

NO.	DATE	REMARKS	BY

REVISIONS

DESIGN

DESIGNED BY DATE
DRAWN BY DATE
CHECKED BY DATE

BOVAY ENGINEERS, INC.
HOUSTON • AUSTIN • ALBUQUERQUE • BATON ROUGE

CITY OF ALBUQUERQUE
PUBLIC WORKS DEPARTMENT
ENGINEERING GROUP

TITLE: TIJERAS ARROYO CROSSING AT FOUR HILLS ROAD

FOUR HILLS ROAD REALIGNMENT - TRAFFIC CONTROL PLAN

APPROVALS	ENGINEER	DATE	APPROVALS	ENGINEER	DATE
D.R.C. Chair					
Trans. Dev.					
Utility Dev.					

DRAWING NO. 1826 | MAP NO. | SHEET R7 OF 10

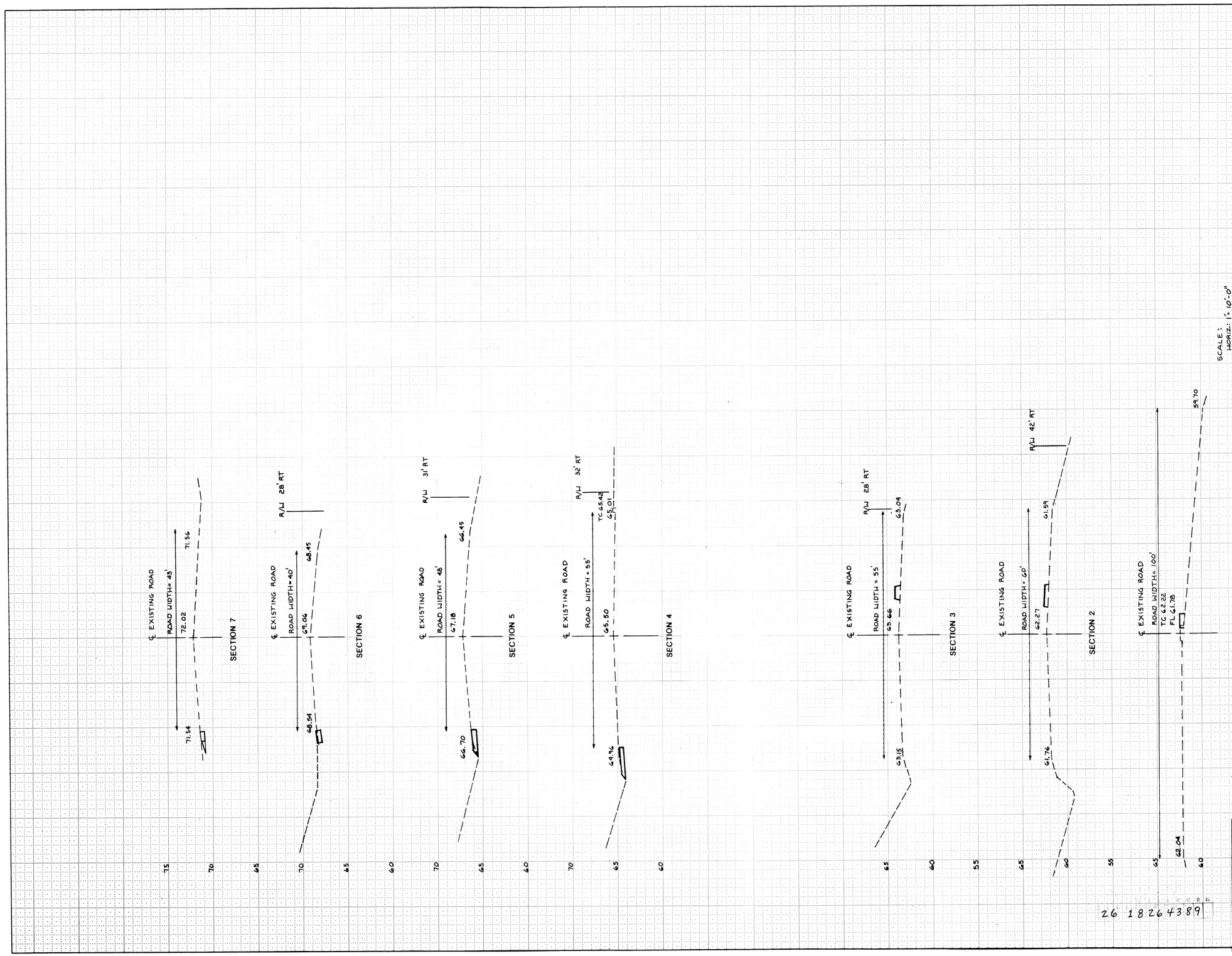

N2436

AS BUILT INFORMATION

CONTRACTOR
WORK STAKED BY — DATE
INSPECTOR'S ACCEPTANCE BY — DATE
FIELD VERIFICATION BY — DATE
DRAWINGS CORRECTED BY — DATE

MICRO-FILM INFORMATION

RECORDED BY — DATE
NO.

BENCH MARKS

SURVEY INFORMATION

FIELD NOTES

NO.	BY	DATE

ENGINEER'S SEAL

NO.	DATE	REMARKS	BY

REVISIONS

DESIGN

DESIGNED BY — DATE
DRAWN BY — DATE
CHECKED BY — DATE

CITY OF ALBUQUERQUE
MUNICIPAL DEVELOPMENT DEPARTMENT
ENGINEERING DIVISION

TITLE: TIJERAS ARROYO CROSSING AT FOUR HILLS ROAD

FOUR HILLS ROAD REALIGNMENT - CROSS SECTIONS

APPROVALS	ENGINEER	DATE	APPROVALS	ENGINEER	DATE
City Engineer			Liquid Waste		
A.C.E.-Design			Traffic		
A.C.E.-Hydrology			Water		

DRAWING NO. 1826

SHEET R8 OF 10

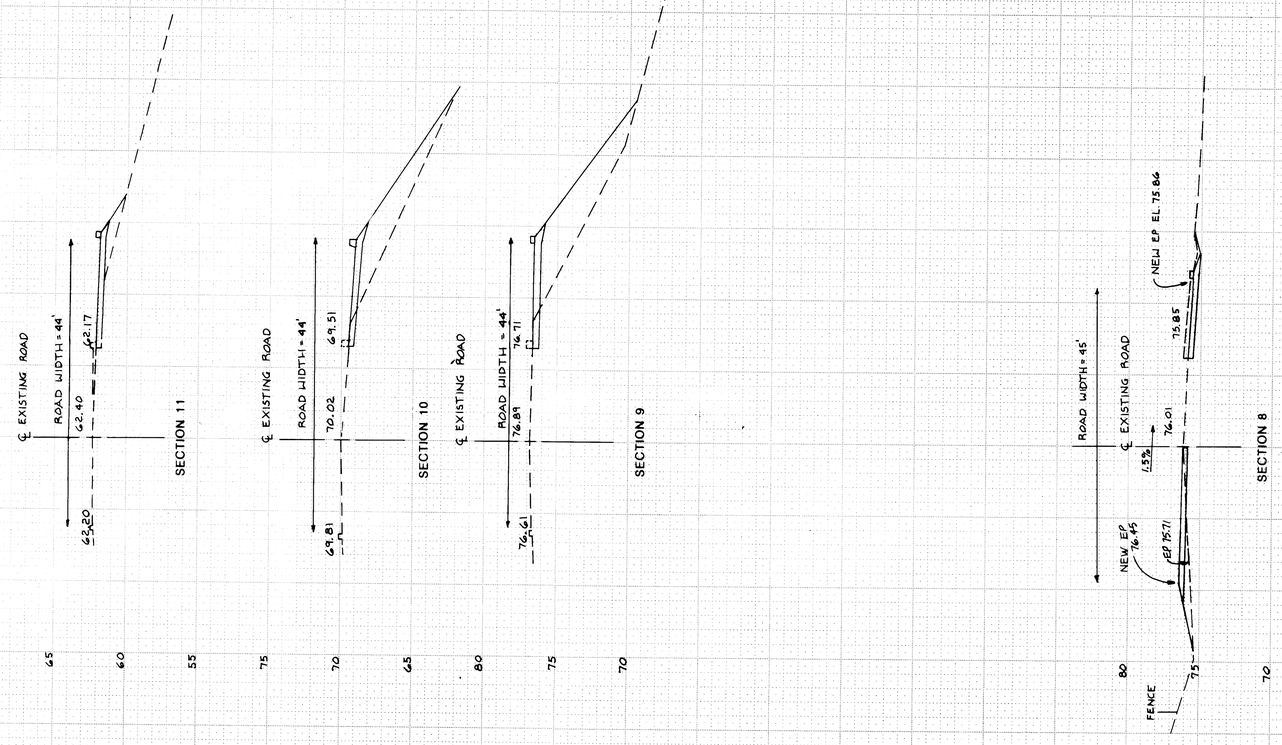

SCALE:
HORIZ: 1" = 10'-0"
VERT: 1" = 5'-0"

BOVAY ENGINEERS, INC.
HOUSTON · DALLAS · AUSTIN · ALBUQUERQUE · SANTOS VEGAS

26 18264489

NO.	DATE	REMARKS	BY
		REVISIONS	

DESIGNED BY DATE
DRAWN BY DATE
CHECKED BY DATE

ENGINEER'S SEAL

SURVEY INFORMATION
FIELD NOTES

NO.	BY	DATE

BENCH MARKS

AS BUILT INFORMATION
CONTRACTOR
WORK DONE BY
STAKED BY DATE
INSPECTORS
ACCEPTANCE BY DATE
FIELD
VERIFICATION BY DATE
DRAWINGS
CORRECTED BY DATE
MICRO-FILM INFORMATION
RECORDED BY DATE
NO.

CITY OF ALBUQUERQUE
MUNICIPAL DEVELOPMENT DEPARTMENT
ENGINEERING DIVISION

TITLE: TIJERAS ARROYO CROSSING AT FOUR HILLS ROAD

FOUR HILLS ROAD REALIGNMENT - CROSS SECTIONS

APPROVALS	ENGINEER	DATE	APPROVALS	ENGINEER	DATE
City Engineer			Liquid Waste		
A.C.E.- Design			Traffic		
A.C.E.-Hydrology			Water		

DRAWING NO. 1826

SHEET R9 OF 10

N24361

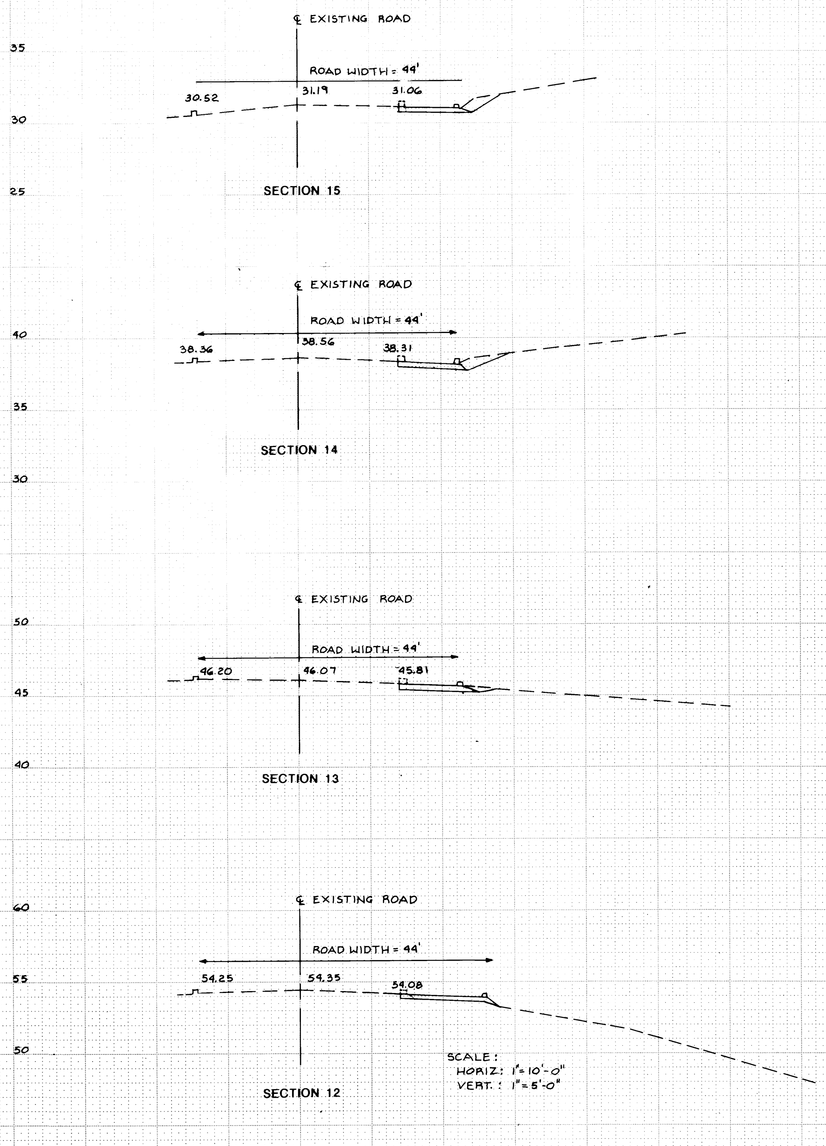

26 1826 4 5 8 9

CITY OF ALBUQUERQUE
MUNICIPAL DEVELOPMENT DEPARTMENT
ENGINEERING DIVISION

TITLE: TIJERAS ARROYO CROSSING AT FOUR HILLS ROAD

FOUR HILLS ROAD REALIGNMENT - CROSS SECTIONS

APPROVALS	ENGINEER	DATE	APPROVALS	ENGINEER	DATE
City Engineer			Liquid Waste		
A.C.E.-Design			Traffic		
A.C.E.-Hydrology			Water		

DRAWING NO. 1826

SHEET R10 OF 10

NO.	DATE	REMARKS	BY

REVISIONS

DESIGN

DESIGNED BY DATE
DRAWN BY DATE
CHECKED BY DATE

ENGINEER'S SEAL

SURVEY INFORMATION

FIELD NOTES

NO.	BY	DATE

BENCH MARKS

AS BUILT INFORMATION

CONTRACTOR
WORK STAKED BY DATE
INSPECTOR'S ACCEPTANCE BY DATE
FIELD VERIFICATION BY DATE
DRAWINGS CORRECTED BY DATE

MICRO-FILM INFORMATION

RECORDED BY DATE
NO.

45