| 1 | 2 | 3 | 4 | 5 | 6 | 7 | 8 | 9 | 10 | 11 | 12 | 13 | 14 | 15 | 16 | 17 | 18 | 19 | 20 | 21 | 22 | 23 | 24 | 25 | 26 | 27 | 28 | 29 | 30 | 31 |
|---|---|---|---|---|---|---|---|---|---|---|---|---|---|---|---|---|---|---|---|---|---|---|---|---|---|---|---|---|---|---|
| 2 | 2 | | 0 | 2 | 2 | | 0 | 1 | 7 | 6 | | | | | 0 | 2 | | | | | | | | | 6 | 0 | 2 | 3 | 2 | |

APPROVAL OF AS BUILT DRAWINGS
ASST. CITY ENGINEER - FIELD
DATE 11-26-82

APPROVED FOR CONSTRUCTION
CITY ENGINEER — DATE 4-6-77

CITY OF ALBUQUERQUE
PUBLIC WORKS DEPARTMENT
ENGINEERING DIVISION

TITLE: GLENWOOD HILLS SOUTH ARROYO

| APPROVALS | ENGINEER | DATE | APPROVALS | ENGINEER | DATE |
|---|---|---|---|---|---|
| City Engineer | | 4-6-77 | Liquid Waste | | |
| A.C.E.- Design | | 4/6/77 | Traffic | | |
| A.C.E.-Hydrology | | | Water | | |

DRAWING NO. SS-22-76 — SHEET 1 OF 11

AS-BUILT INFORMATION
CONTRACTOR
WORK STAKED BY — DATE
AS-BUILT DRAWING CORRECTED BY — DATE

MICRO-FILM INFORMATION
RECORDED BY — DATE
NO.

BENCH MARKS
RETURN EMBUDITO & MT. SHADOW 5890.64

SURVEY INFORMATION
FIELD NOTES

| NO. | BY | DATE |
|---|---|---|
| 1 | ANGEL | 9-1-76 |

REFERENCES
MAP NO. G-23
EST. NO.
W.O. NO. 72

| NO. | DATE | REMARKS | BY |
|---|---|---|---|
| 1 | 7/77 | CHANGED 1"=50' TO 1"=10' | JD |

REVISIONS

DESIGN
DESIGNED BY JCL — DATE 8-23-76
DRAWN BY JD — DATE 8-23-76
CHECKED BY — DATE

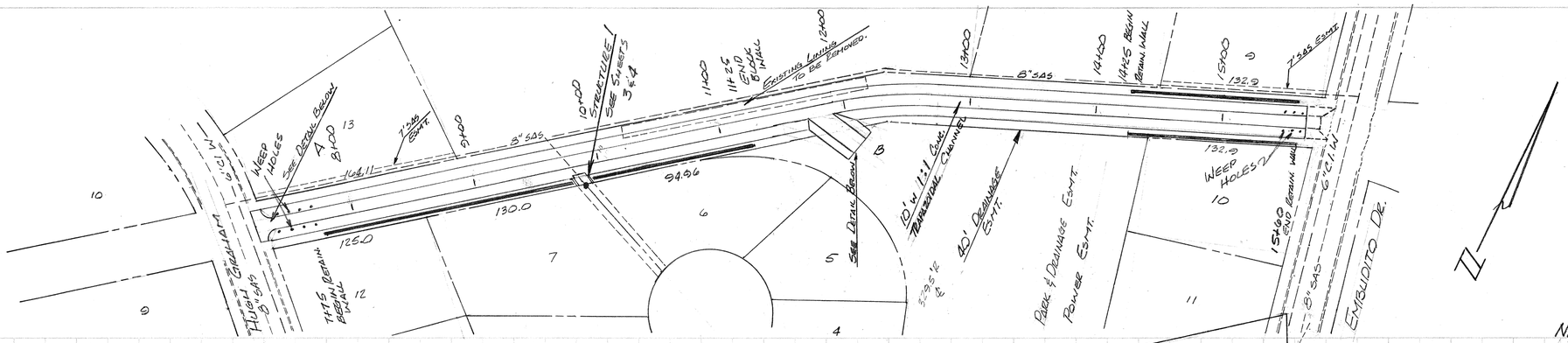


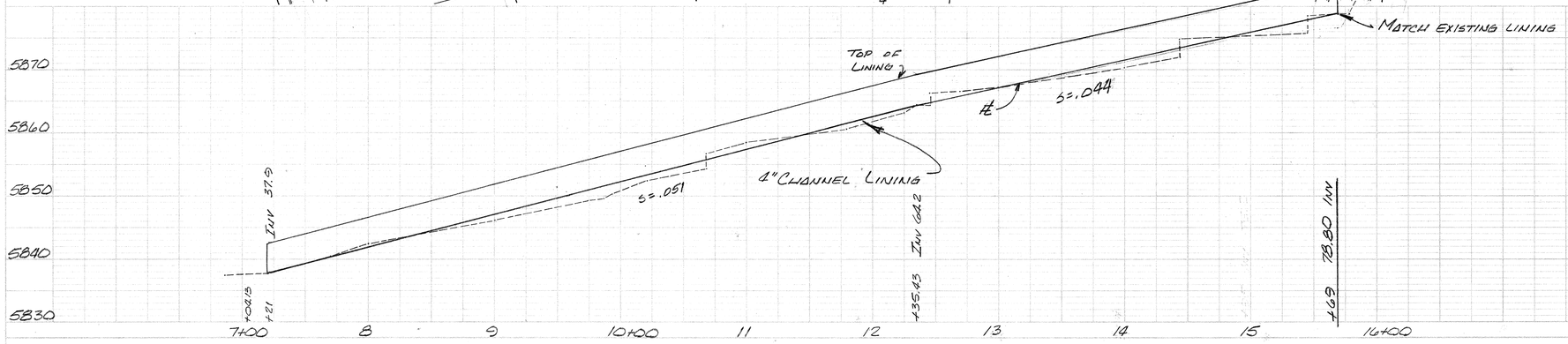


NOTE:
1. SEE SHEET 9 FOR DETAIL OF RETAIN. WALL AND SHEETS 10 AND 11 FOR STATIONING AND HEIGHTS.
2. 2" DIA WEEP HOLES TO BE SET 18" ABOVE TOE OF SLOPE AND TO BE SET WITH A 2 CU FT BASE OF 1 1/2" GRAVEL. WEEP HOLES WILL BE LOCATED 10' OC CONTINOUSLY ON EACH SIDE OF CHANNEL.

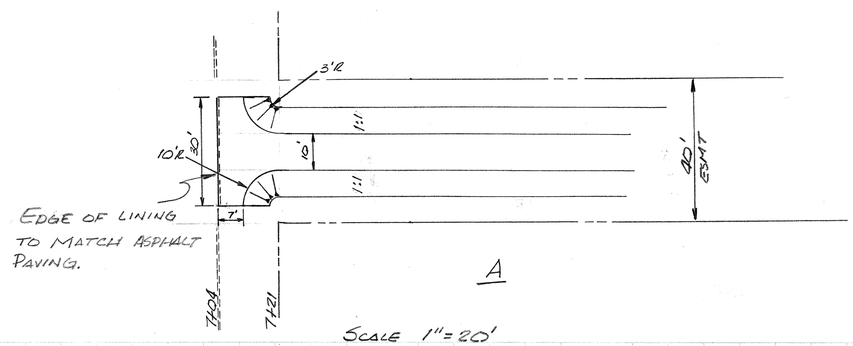


A

SCALE 1" = 20'

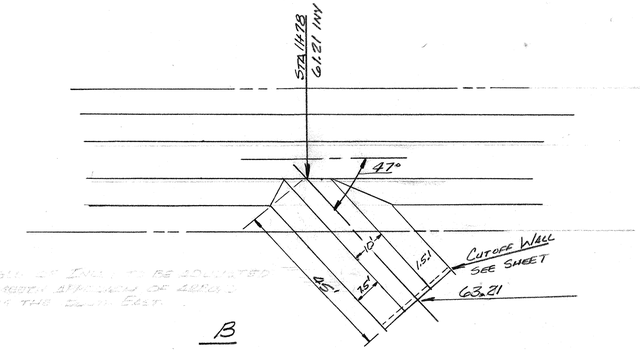


B

ANGLE OF FLOW TO BE ADJUSTED TO POINT BEARING OF ARROYO FROM THE DOWN EAST.

7+00

| 1 | 2 | 3 | 4 | 5 | 6 | 7 | 8 | 9 | 10 | 11 | 12 | 13 | 14 | 15 | 16 | 17 | 18 | 19 | 20 | 21 | 22 | 23 | 24 | 25 | 26 | 27 | 28 | 29 | 30 | 31 |
|---|---|---|---|---|---|---|---|---|---|---|---|---|---|---|---|---|---|---|---|---|---|---|---|---|---|---|---|---|---|---|
| 2 | 2 | 0 | 2 | 2 | | 0 | 2 | 7 | 6 | | | | | 0 | 2 | | | | | | | | | | 6 | 0 | 2 | 3 | 2 | |

SCALE H 1" = 50' - V 1" = 10'

| NO. | DATE | CHANGED | BY |
|---|---|---|---|
| 1 | 7/8/77 | S5, FROM 1.5:1 TO 1:1 | JD |

REVISIONS — REMARKS

DESIGNED BY LCC — DATE 8-23-76
DRAWN BY JD — DATE 8-23-76
CHECKED BY — DATE

REFERENCES
MAP NO. G-23
EST. NO.
W.O. NO. 72

AS-BUILT INFORMATION
CONTRACTOR — DATE
WORK INSPECTED BY — DATE
DRAWING CORRECTED BY — DATE

MICRO-FILM INFORMATION
RECORDED BY — DATE
NO.

BENCH MARKS
BETWEEN EMBUDITO & 14TH SHADOW SBB&CO

SURVEY INFORMATION
FIELD NOTES

| NO. | BY | DATE |
|---|---|---|
| 1 | ANGEL | 7-76 |

CITY OF ALBUQUERQUE
PUBLIC WORKS DEPARTMENT
ENGINEERING DIVISION

TITLE: GLENWOOD HILLS SOUTH ARROYO

| APPROVALS | ENGINEER | DATE | APPROVALS | ENGINEER | DATE |
|---|---|---|---|---|---|
| City Engineer | | 4-6-77 | Liquid Waste | | |
| A.C.E.-Design | | 4/6/77 | Traffic | | |
| A.C.E.-Hydrology | | | Water | | |

APPROVED FOR CONSTRUCTION
CITY ENGINEER — DATE 4-6-77

DRAWING NO. SS-22-76

SHEET 2 OF 11

PLATE 2 PLAN-PROFILE U. P. R. & R. E. STANDARD
100% RAG ASERPROOF VELLUM—MADE AND PRINTED IN U. S. A.
EUGENE DIETZGEN CO.

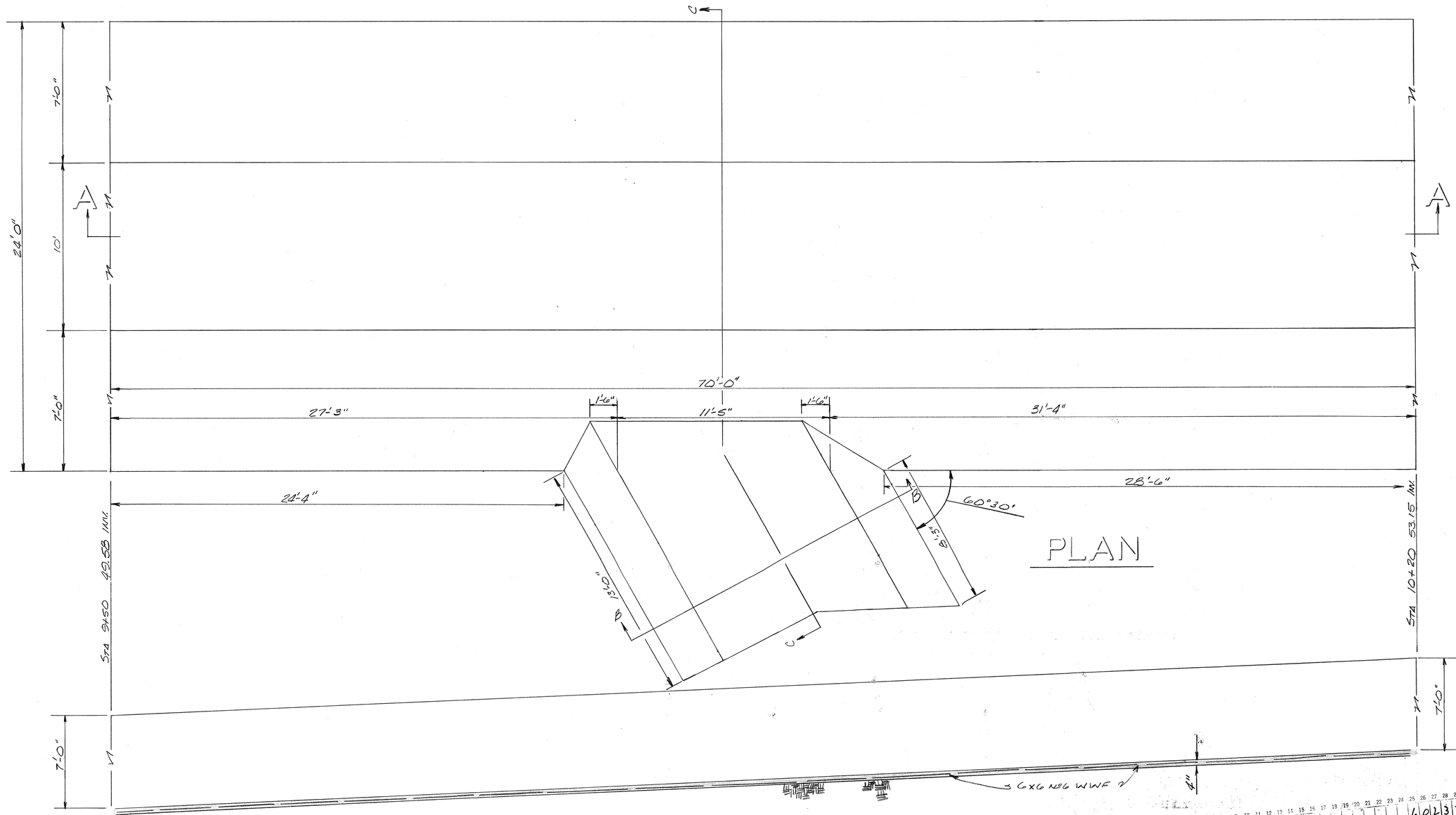


SCALE 3/8"=1'-0"

| AS-BUILT INFORMATION | |
|---|---|
| CONTRACTOR | |
| WORK INSPECTED BY | DATE |
| DRAWING CORRECTED BY | DATE |

| MICRO-FILM INFORMATION | |
|---|---|
| RECORDED BY | DATE |
| NO. | |

BENCH MARKS

Bureau Engineers & Mt Survey 5898.65

| SURVEY INFORMATION | | |
|---|---|---|
| FIELD NOTES | | |
| NO. | BY | DATE |
| 1 | AMGEZ | 9-1-76 |

REFERENCES

MAP NO. G-23
EST. NO.
W.O. NO. 72

| NO. | DATE | REMARKS | BY |
|---|---|---|---|
| 1 | 11/9/77 | CHANGED SS FROM 1.5:1 to 1:1 | JD |

REVISIONS

| DESIGN | |
|---|---|
| DESIGNED BY KCL | DATE 2-23-76 |
| DRAWN BY JD | DATE 2-23-76 |
| CHECKED BY | DATE |

CITY OF ALBUQUERQUE
PUBLIC WORKS DEPARTMENT
ENGINEERING DIVISION

TITLE: GLENWOOD HILLS SOUTH ARROYO
STRUCTURE 1

| APPROVALS | ENGINEER | DATE | APPROVALS | ENGINEER | DATE |
|---|---|---|---|---|---|
| City Engineer | [signature] | 4-6-77 | Liquid Waste | | |
| A.C.E.-Design | [signature] | 4/6/77 | Traffic | | |
| A.C.E.-Hydrology | | | Water | | |

APPROVED FOR CONSTRUCTION
[signature] 4-6-77
CITY ENGINEER DATE

DRAWING NO. SS-22-76

SHEET 3 OF 11

1

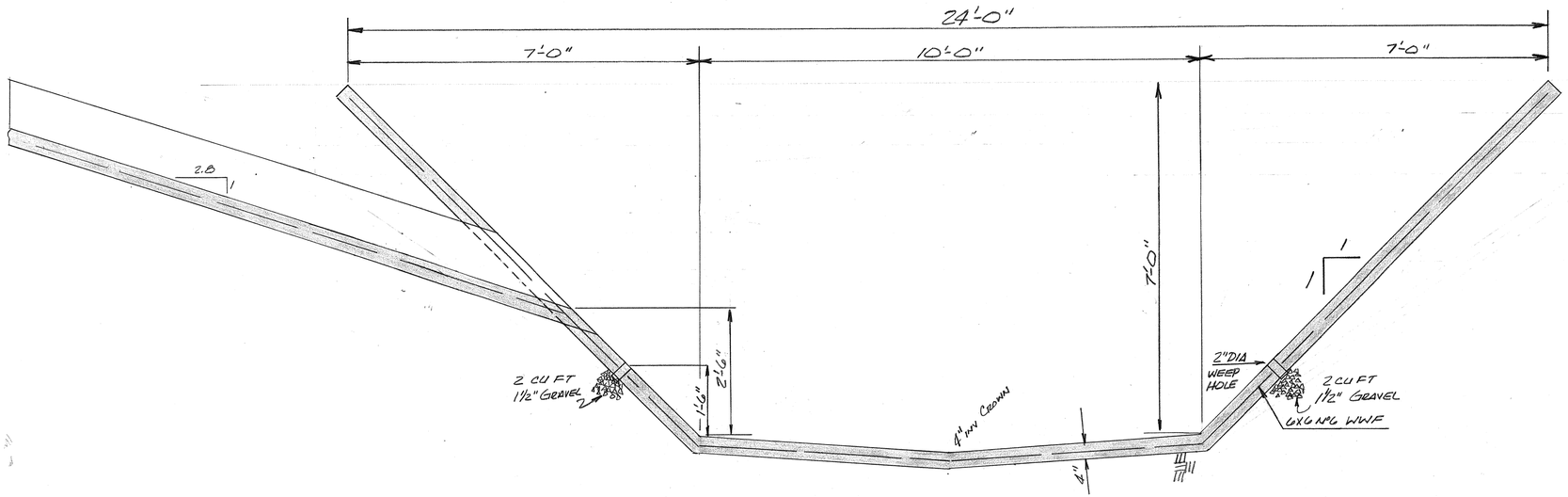


# SECTION C-C

SCALE 3/4" = 1'-0"

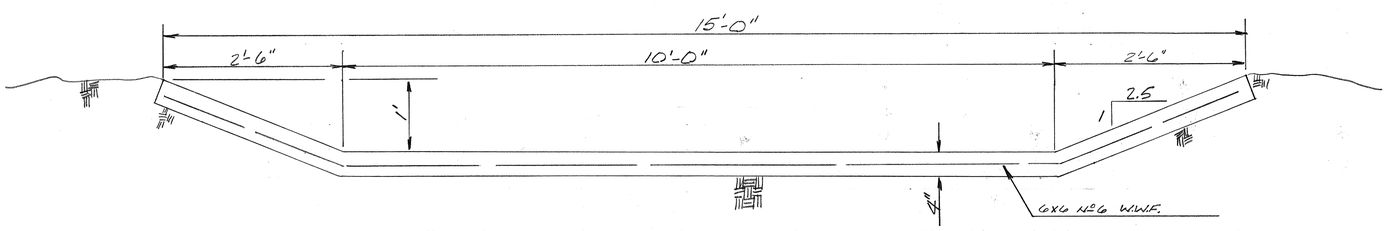


# SECTION B-B

SCALE 1" = 1'-0"

1 2 3 4 5 6 7 8 9 10 11 12 13 14 15 16 17 18 19 20 21 22 23 24 25 26 27 28 29 30 31

22 022 0476 11 6023 7

| SURVEY INFORMATION | | |
|---|---|---|
| FIELD NOTES | | |
| NO. | BY | DATE |
| 1 | ANGEL | 9-77 |

| REFERENCES | |
|---|---|
| MAP NO. | G-23 |
| EST. NO. | |
| W. O. NO. | 72 |

| REVISIONS | | | |
|---|---|---|---|
| NO. | DATE | REMARKS | BY |
| 1 | 7/6/77 | CHANGED SS FROM 1.5:1 TO 1:1 | JD |

| DESIGN | | |
|---|---|---|
| DESIGNED BY | EC | DATE 8-23-76 |
| DRAWN BY | JD | DATE 8-23-76 |
| CHECKED BY | | DATE |

| BENCH MARKS |
|---|
| RETURN ENGRAVED ℄ MT SUNDAY 5898.69 |

| AS-BUILT INFORMATION | |
|---|---|
| CONTRACTOR | |
| WORK COMPLETED BY | DATE |
| DRAWINGS CORRECTED BY | DATE |

| MICRO-FILM INFORMATION | |
|---|---|
| RECORDED BY | DATE |
| NO. | |

CITY OF ALBUQUERQUE
PUBLIC WORKS DEPARTMENT
ENGINEERING DIVISION

TITLE: GLENWOOD HILLS SOUTH ARROYO STRUCTURE 1

| APPROVALS | ENGINEER | DATE | APPROVALS | ENGINEER | DATE |
|---|---|---|---|---|---|
| City Engineer | | 9-6-77 | Liquid Waste | | |
| A.C.E.-Design | | 9/1/77 | Traffic | | |
| A.C.E.-Hydrology | | | Water | | |

APPROVED FOR CONSTRUCTION
CITY ENGINEER 9-6-77 DATE

DRAWING NO. SS-22-76

SHEET 4 OF 11

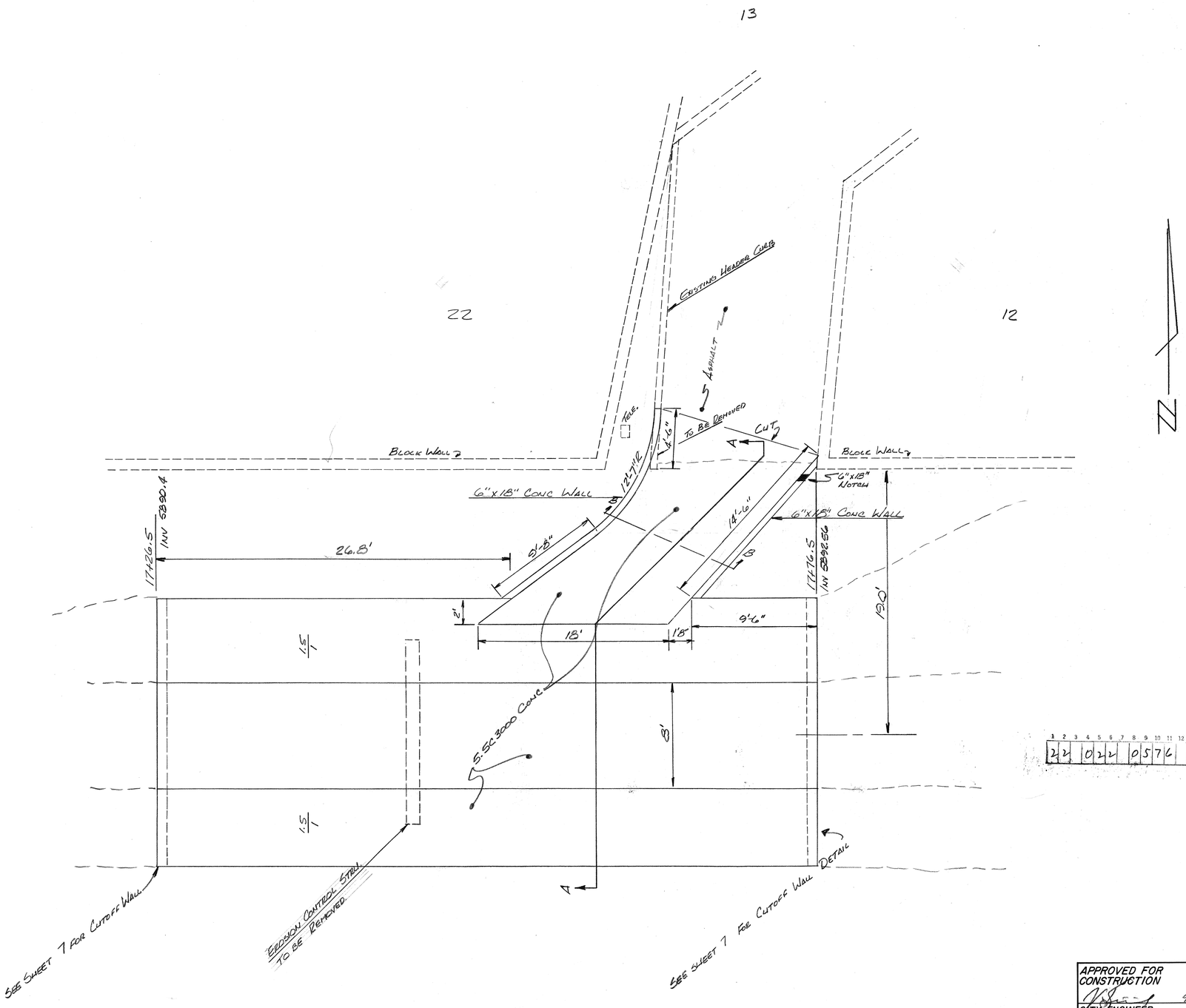


SCALE 1/4"=1'-0"

| 1 | 2 | 3 | 4 | 5 | 6 | 7 | 8 | 9 | 10 | 11 | 12 | 13 | 14 | 15 | 16 | 17 | 18 | 19 | 20 | 21 | 22 | 23 | 24 | 25 | 26 | 27 | 28 | 29 | 30 | 31 |
|---|---|---|---|---|---|---|---|---|---|---|---|---|---|---|---|---|---|---|---|---|---|---|---|---|---|---|---|---|---|---|
| 2 | 2 | 0 | 2 | 2 | 0 | 5 | 7 | 6 | | | | | 1 | 1 | 1 | | | | | | | | | 6 | 0 | 2 | 3 | 2 | | |

**AS-BUILT INFORMATION**

CONTRACTOR

| | | DATE |
|---|---|---|
| WORK COMPLETED BY | | |
| DRAWING CORRECTED BY | | DATE |

**MICRO-FILM INFORMATION**

| | |
|---|---|
| RECORDED BY | |
| DATE | |
| NO. | |

**BENCH MARKS**

CITADEL ESTABLISHED & HT SHADOW 5898.64

**SURVEY INFORMATION**

FIELD NOTES

| NO. | BY | DATE |
|---|---|---|
| 1 | ANGEL | 9-1-76 |

**REFERENCES**

| | |
|---|---|
| MAP NO. | G-23 |
| EST. NO. | |
| W. O. NO. | 72 |

**REVISIONS**

| NO. | DATE | REMARKS | BY |
|---|---|---|---|
| 1 | 7/1/77 | CHANGED SS FROM 1.5:1 TO 1:1 | |

DESIGN

| | | |
|---|---|---|
| DESIGNED BY | R.L. | DATE 8-23-76 |
| DRAWN BY | J.D. | DATE 8-23-76 |
| CHECKED BY | | DATE |

CITY OF ALBUQUERQUE
PUBLIC WORKS DEPARTMENT
ENGINEERING DIVISION

TITLE: GLENWOOD HILLS SOUTH ARROYO
STRUCTURE 2

| APPROVALS | ENGINEER | DATE | APPROVALS | ENGINEER | DATE |
|---|---|---|---|---|---|
| City Engineer | | 9-6-77 | Liquid Waste | | |
| A.C.E.-Design | | 9/6/77 | Traffic | | |
| A.C.E.-Hydrology | | | Water | | |

APPROVED FOR CONSTRUCTION
CITY ENGINEER 9-6-77 DATE

DRAWING NO. SS-22-76

SHEET 5 OF 11

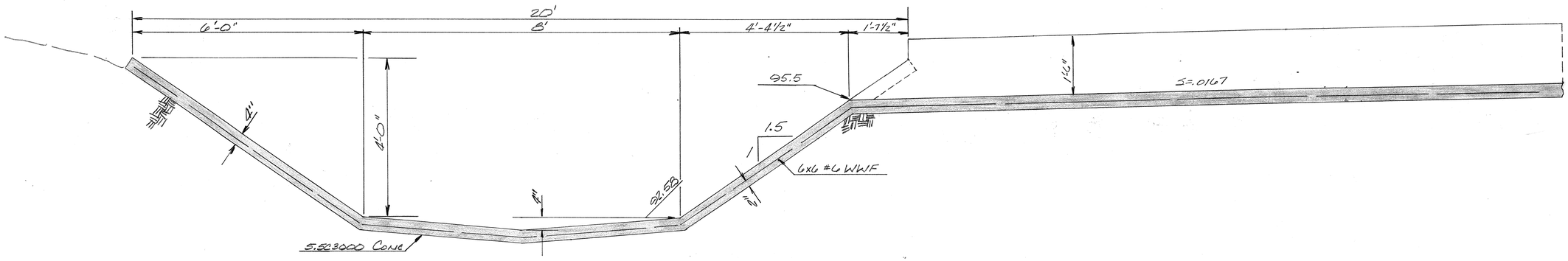


SECTION A-A

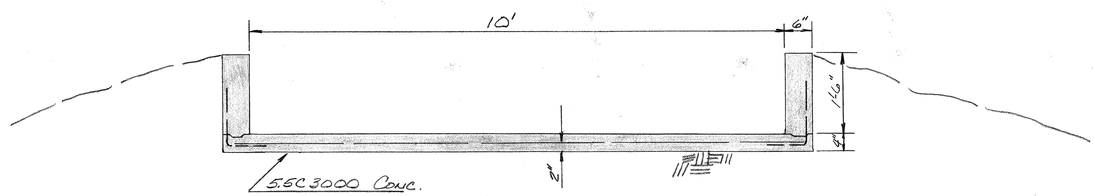


SECTION B-B

| 1 | 2 | 3 | 4 | 5 | 6 | 7 | 8 | 9 | 10 | 11 | 12 | 13 | 14 | 15 | 16 | 17 | 18 | 19 | 20 | 21 | 22 | 23 | 24 | 25 | 26 | 27 | 28 | 29 | 30 | 31 |
|---|---|---|---|---|---|---|---|---|---|---|---|---|---|---|---|---|---|---|---|---|---|---|---|---|---|---|---|---|---|---|
| 2 | 2 | | 0 | 2 | 2 | | 0 | 6 | 7 | 6 | | | | 1 | 1 | | | | | | | | | 6 | 0 | 2 | 3 | 2 | | |

SCALE 3/4"=1'-0"

**AS-BUILT INFORMATION**

CONTRACTOR

| | | |
|---|---|---|
| WORK INSPECTED BY | | DATE |
| DRAWING CORRECTED BY | | DATE |

**MICRO-FILM INFORMATION**

| | |
|---|---|
| RECORDED BY | DATE |
| NO. | |

**BENCH MARKS**

BETWEEN ESTABLISHED & PRIVATE SLIDE DRW 5B98.64

**SURVEY INFORMATION**

FIELD NOTES

| NO. | BY | DATE |
|---|---|---|
| 1 | ANGEL | 9-7-7 |

**REFERENCES**

| | |
|---|---|
| MAP NO. | G-23 |
| EST. NO. | W.O. NO. 72 |

**REVISIONS**

| NO. | DATE | REMARKS | BY |
|---|---|---|---|
| 1 | 9/9/77 | CHANGE SS FROM 1.5:1 TO 1:1 | VD |

DESIGN

| | | DATE |
|---|---|---|
| DESIGNED BY | RL | 8-23-76 |
| DRAWN BY | JD | 8-23-76 |
| CHECKED BY | | DATE |

CITY OF ALBUQUERQUE
PUBLIC WORKS DEPARTMENT
ENGINEERING DIVISION

TITLE:
GLENWOOD HILLS SOUTH ARROYO
STRUCTURE 2

| APPROVALS | ENGINEER | DATE | APPROVALS | ENGINEER | DATE |
|---|---|---|---|---|---|
| City Engineer | | 9-6-77 | Liquid Waste | | |
| A.C.E.- Design | | 9/6/77 | Traffic | | |
| A.C.E.-Hydrology | | | Water | | |

APPROVED FOR CONSTRUCTION
CITY ENGINEER 9-6-77 DATE

DRAWING NO. SS-22-76

SHEET 6 OF 11

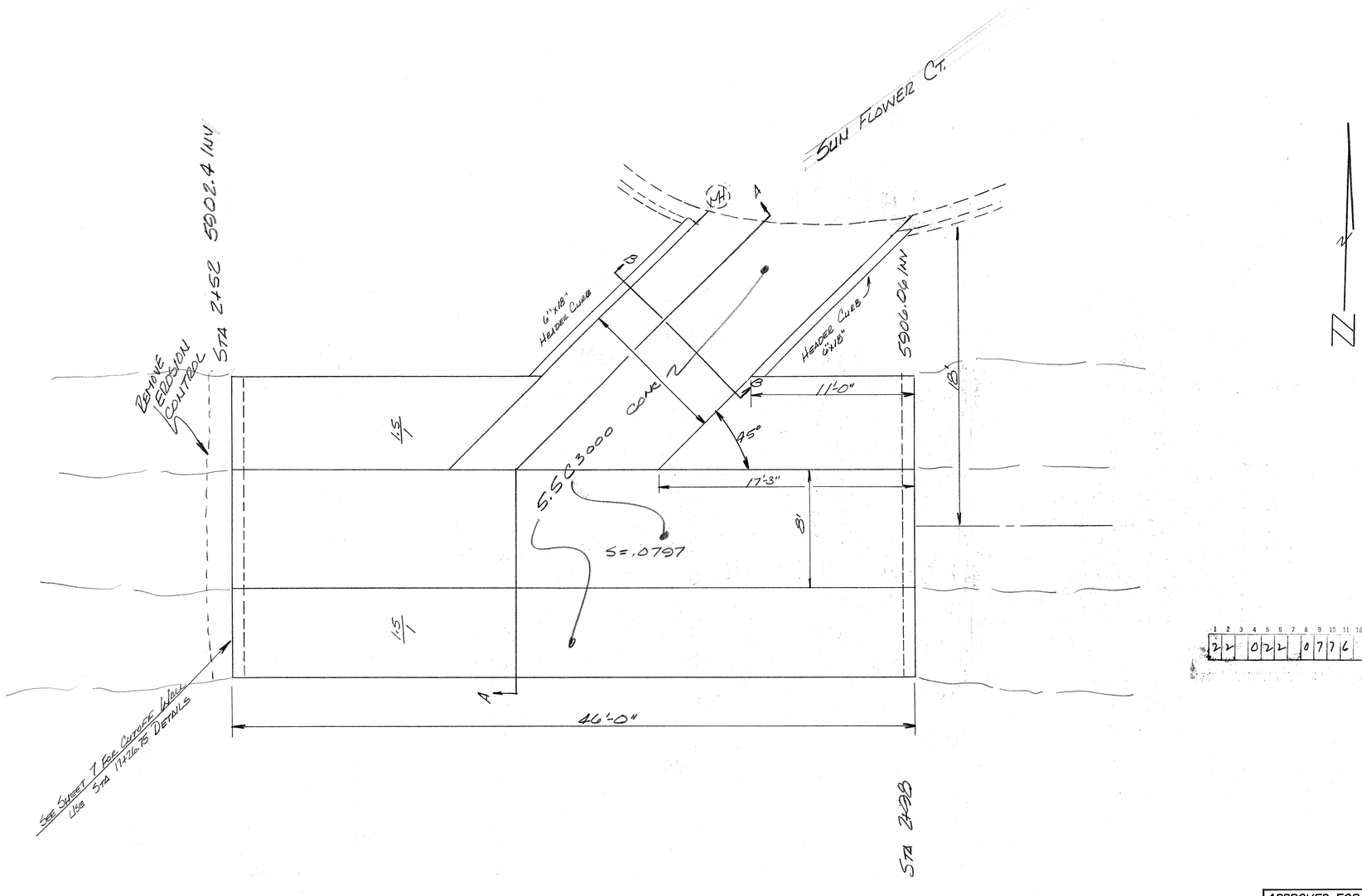


SCALE 1/4" = 1'-0"

| 1 | 2 | 3 | 4 | 5 | 6 | 7 | 8 | 9 | 10 | 11 | 12 | 13 | 14 | 15 | 16 | 17 | 18 | 19 | 20 | 21 | 22 | 23 | 24 | 25 | 26 | 27 | 28 | 29 | 30 | 31 |
|---|---|---|---|---|---|---|---|---|---|---|---|---|---|---|---|---|---|---|---|---|---|---|---|---|---|---|---|---|---|---|
| 2 | 2 | | 0 | 2 | 2 | | 0 | 7 | 7 | 6 | | | | 1 | 1 | | | | | | | | | 6 | 0 | 2 | 3 | 2 | | |

**AS-BUILT INFORMATION**

| | |
|---|---|
| CONTRACTOR | |
| WORK INSPECTED BY | DATE |
| DRAWING CORRECTED BY | DATE |

**MICRO-FILM INFORMATION**

| | |
|---|---|
| RECORDED BY | DATE |
| NO. | |

**BENCH MARKS**

KEYSTON EMBOSSED E HTH SHADOW

**SURVEY INFORMATION**

FIELD NOTES

| NO. | BY | DATE |
|---|---|---|
| 1 | AUGER | 9-7-76 |

**REFERENCES**

MAP NO. G-23

EST. NO.

W.O. NO.

**REVISIONS**

| NO. | DATE | REMARKS | BY |
|---|---|---|---|
| 1 | 9/9/77 | CHANGED 9.5 FROM 1.5:1 TO 1:1 | WD |

DESIGN

| | | |
|---|---|---|
| DESIGNED BY | LL | DATE 8-23-76 |
| DRAWN BY | WD | DATE 8-23-76 |
| CHECKED BY | | DATE |

CITY OF ALBUQUERQUE
PUBLIC WORKS DEPARTMENT
ENGINEERING DIVISION

TITLE: GLENWOOD HILLS SOUTH ARROYO
STRUCTURE 3

| APPROVALS | ENGINEER | DATE | APPROVALS | ENGINEER | DATE |
|---|---|---|---|---|---|
| City Engineer | | 9-6-77 | Liquid Waste | | |
| A.C.E.-Design | | | Traffic | | |
| A.C.E.-Hydrology | | 9/6/77 | Water | | |

APPROVED FOR CONSTRUCTION
CITY ENGINEER 4-6-77 DATE

DRAWING NO. SS-22-76

SHEET 7 OF 11

1

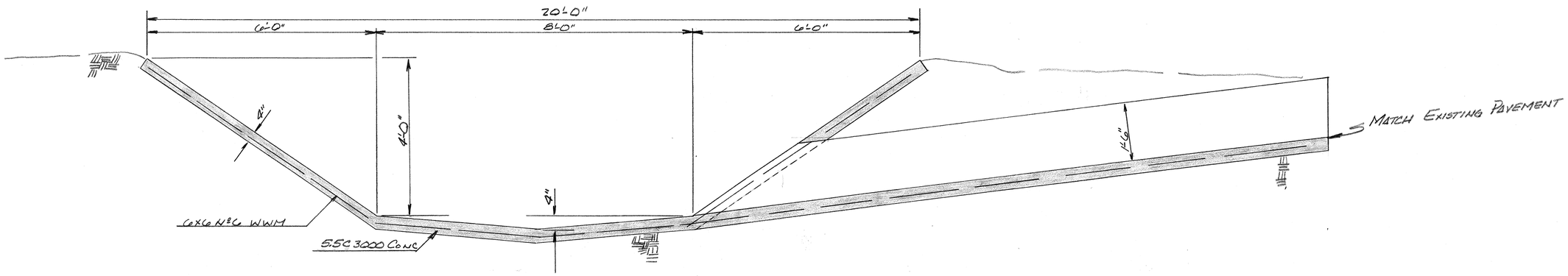


SECTION A-A

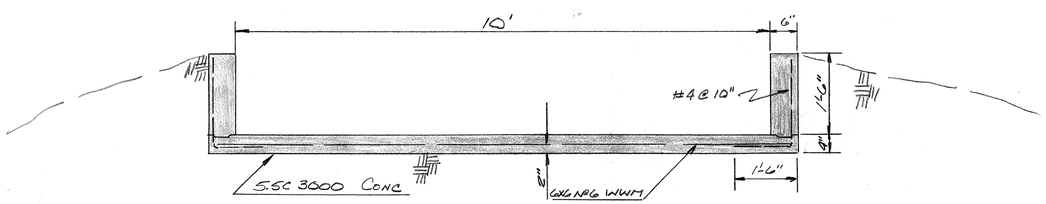


SECTION B-B

| 1 | 2 | 3 | 4 | 5 | 6 | 7 | 8 | 9 | 10 | 11 | 12 | 13 | 14 | 15 | 16 | 17 | 18 | 19 | 20 | 21 | 22 | 23 | 24 | 25 | 26 | 27 | 28 | 29 | 30 | 31 |
|---|---|---|---|---|---|---|---|---|---|---|---|---|---|---|---|---|---|---|---|---|---|---|---|---|---|---|---|---|---|---|
| 2 | 2 | | 0 | 2 | 2 | - | 0 | 8 | 7 | 6 | | | | 1 | 1 | | | | | | | | | 6 | 0 | 2 | 3 | 2 | | |

SCALE 3/4" = 1'-0"

**AS-BUILT INFORMATION**

CONTRACTOR
WORK ACCEPTED BY — DATE
DRAWING CORRECTED BY — DATE

**MICRO-FILM INFORMATION**

RECORDED BY — DATE
NO.

**BENCH MARKS**

BETWEEN EMBANKED & MTN. SLOPE

**SURVEY INFORMATION**

FIELD NOTES

| NO. | BY | DATE |
|---|---|---|
| 1 | ANGEL | 9-1-76 |

**REFERENCES**

MAP NO. G-23
EST. NO.
W. O. NO.

**REVISIONS**

| NO. | DATE | REMARKS | BY |
|---|---|---|---|
| 1 | 7-7-77 | CHANGED SS FROM 1:5:1 TO 1:1 | JD |

DESIGN

DESIGNED BY — DATE 8-23-76
DRAWN BY — DATE 8-23-76
CHECKED BY — DATE

CITY OF ALBUQUERQUE
PUBLIC WORKS DEPARTMENT
ENGINEERING DIVISION

TITLE: GLENWOOD HILLS SOUTH ARROYO STRUCTURE 3

| APPROVALS | ENGINEER | DATE | APPROVALS | ENGINEER | DATE |
|---|---|---|---|---|---|
| City Engineer | | 9-6-77 | Liquid Waste | | |
| A.C.E.-Design | | | Traffic | | |
| A.C.E.-Hydrology | | | Water | | |

APPROVED FOR CONSTRUCTION
CITY ENGINEER — DATE 9-6-77

DRAWING NO. SS-22-76

SHEET 8 OF 11

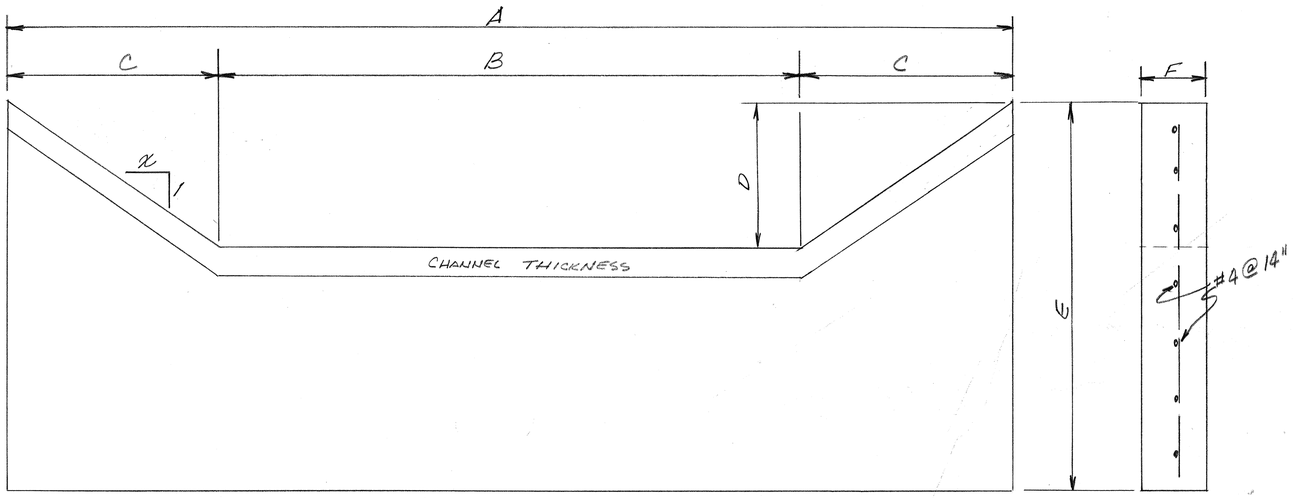


CUTOFF WALL DETAIL
NOT TO SCALE

| STA | A | B | C | D | E | F | x |
|---|---|---|---|---|---|---|---|
| ~~7+21~~ | ~~25'~~ | ~~10'~~ | ~~7.5'~~ | ~~5'~~ | ~~10'~~ | ~~8"~~ | ~~1.5~~ |
| ~~15+80~~ | ~~25'~~ | ~~10'~~ | ~~7.5'~~ | ~~5'~~ | ~~10'~~ | ~~8"~~ | ~~1.5~~ |
| 17+26.75 | 20' | 8' | 6' | 4' | 10' | 8" | 1.5 |
| 17+76.75 | 20' | 8' | 6' | 4' | 7' | 8" | 1.5 |
| APPROACH AT 11+78 | 25' | 10' | 7.5' | 5' | 10' | 8" | 1.5 |
| | | | | | | | 1.5 |

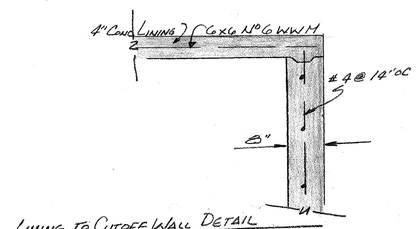


LINING TO CUTOFF WALL DETAIL
SCALE 3/4" = 1'-0"

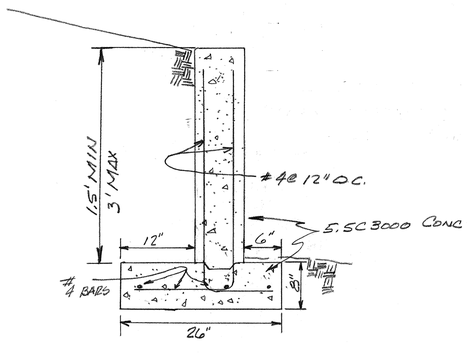


CONC BLOCK WALL
SCALE 1" = 1'-0"

| 1 | 2 | 3 | 4 | 5 | 6 | 7 | 8 | 9 | 10 | 11 | 12 | 13 | 14 | 15 | 16 | 17 | 18 | 19 | 20 | 21 | 22 | 23 | 24 | 25 | 26 | 27 | 28 | 29 | 30 | 31 |
|---|---|---|---|---|---|---|---|---|---|---|---|---|---|---|---|---|---|---|---|---|---|---|---|---|---|---|---|---|---|---|
| 2 | 2 | | 0 | 2 | 2 | | 0 | 9 | 7 | 6 | | | | 1 | 3 | | | | | | | | | 6 | 0 | 2 | 3 | 4 | | |

AS-BUILT INFORMATION
CONTRACTOR
WORK INSPECTED BY — DATE
DRAWING CORRECTED BY — DATE

MICRO-FILM INFORMATION
RECORDED BY — DATE
NO.

BENCH MARKS
BENCH ENGINEER & MAP SHEET 5208-C4

SURVEY INFORMATION
FIELD NOTES

| NO. | BY | DATE |
|---|---|---|
| 1 | ANDER | 9-1-76 |

REFERENCES
MAP NO. G-23
EST. NO.
W.O. NO. 72

| NO. | DATE | REMARKS | BY |
|---|---|---|---|
| 1 | 12/1/77 | CHANGED SS FROM 1.5:1 TO 1:1 | LD |

REVISIONS

DESIGN
DESIGNED BY EL — DATE 8-23-76
DRAWN BY LD — DATE 8-23-76
CHECKED BY — DATE

CITY OF ALBUQUERQUE
PUBLIC WORKS DEPARTMENT
ENGINEERING DIVISION

TITLE: GLENWOOD HILLS SOUTH ARROYO

| APPROVALS | ENGINEER | DATE | APPROVALS | ENGINEER | DATE |
|---|---|---|---|---|---|
| City Engineer | | 4-7-77 | Liquid Waste | | |
| A.C.E.-Design | | 4/6/77 | Traffic | | |
| A.C.E.-Hydrology | | | Water | | |

APPROVED FOR CONSTRUCTION
4-7-77
CITY ENGINEER — DATE

DRAWING NO. 55-22-76

SHEET 5 OF 11

| ORIGINAL SURVEY | | BY | DATE |
|---|---|---|---|
| NOTE BOOK | SURVEYED | | |
| | PLOTTED | | |
| | TEMPLATE | | |
| | AREAS | | |
| NO. | AREAS CHECKED | | |

| FINAL SURVEY | | BY | DATE |
|---|---|---|---|
| NOTE BOOK | SURVEYED | | |
| | PLOTTED | | |
| | TEMPLATE | | |
| | AREAS | | |
| NO. | AREAS CHECKED | | |

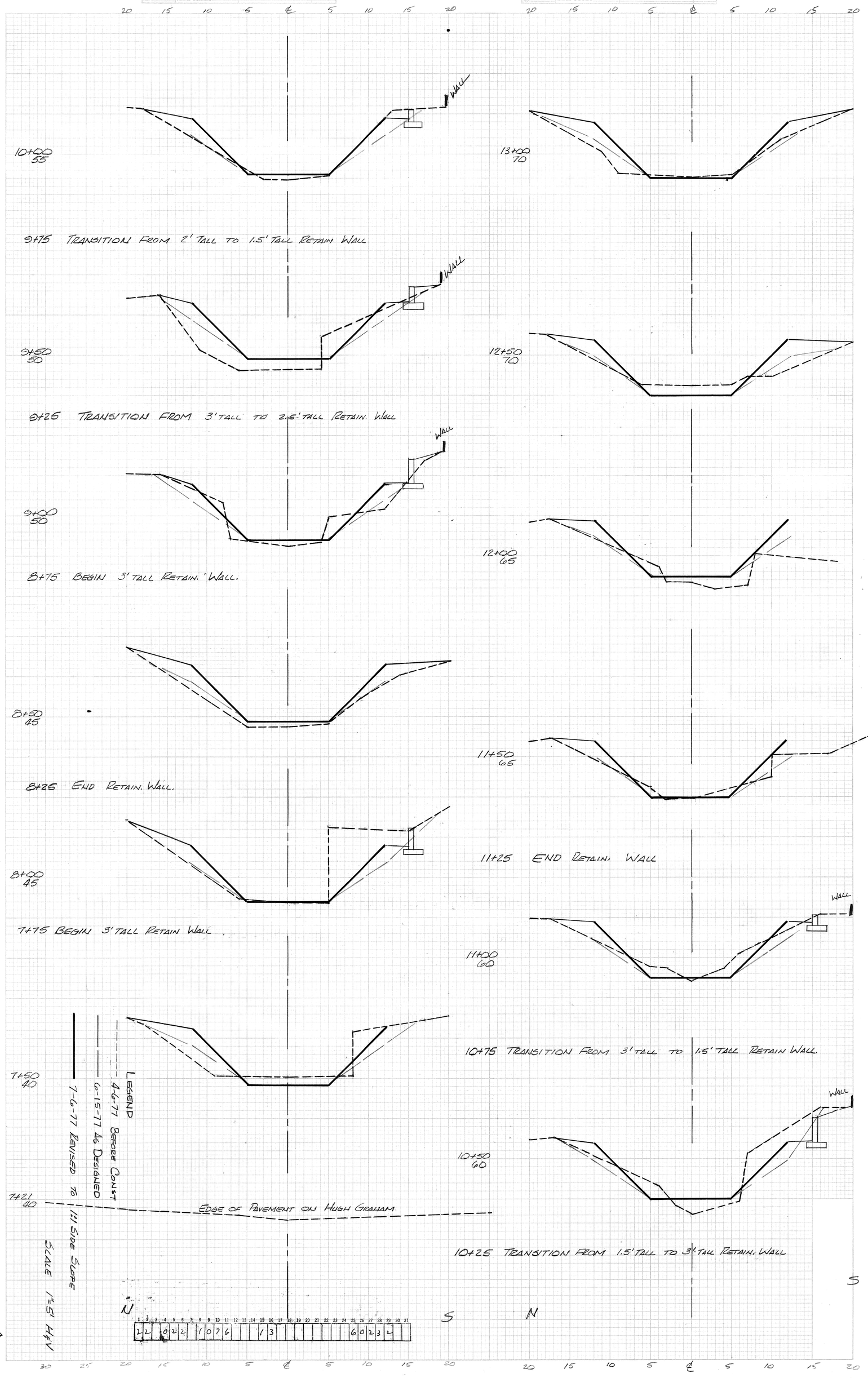


GLENNWOOD HILLS SOUTH ADDN 56-22-76

SHEET 10 OF 11

| ORIGINAL SURVEY | | BY | DATE |
|---|---|---|---|
| NOTE BOOK | SURVEYED | | |
| | PLOTTED | | |
| | TEMPLATE | | |
| | AREA | | |
| NO. | AREA CHECKED | | |

| FINAL SURVEY | | BY | DATE |
|---|---|---|---|
| NOTE BOOK | SURVEYED | | |
| | PLOTTED | | |
| | TEMPLATE | | |
| | AREA | | |
| NO. | AREAS CHECKED | | |

STA. 15+00 TO STA. 15+69.20
CHANNEL BANK PROTECTION
NORTH BANK
SEE SHEET 11-A
REVISION 3, 1-16-78

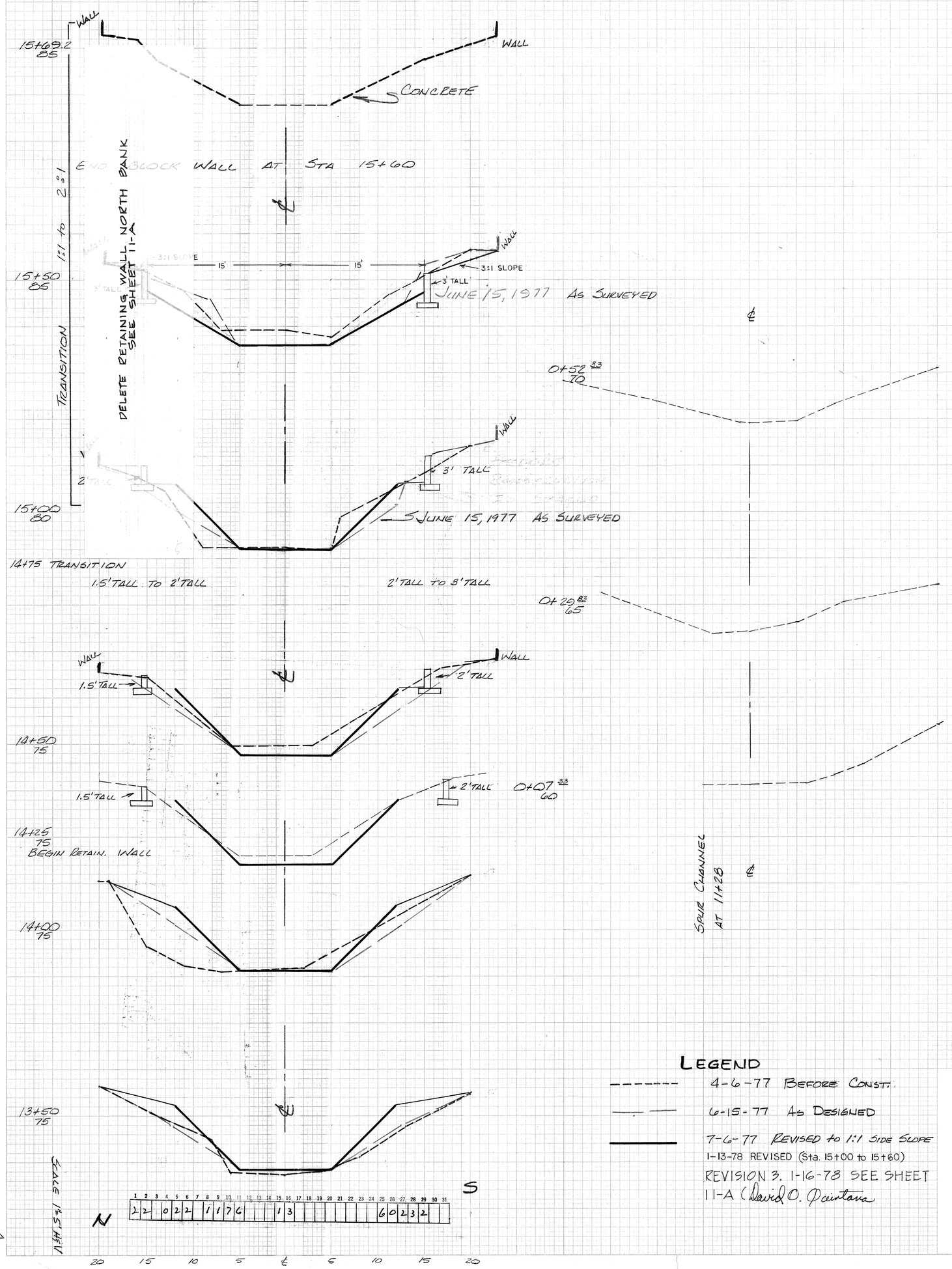


K+E PLATE 3, CROSS-SECTION
KEUFFEL & ESSER CO.
46 7050 MADE IN U.S.A.

GLENWOOD HILLS SOUTH AREOID 55-22-76

SHEET 11 OF 11

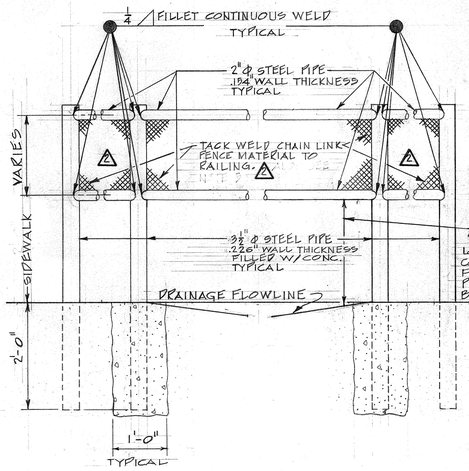


△ HAND RAIL
NOT TO SCALE

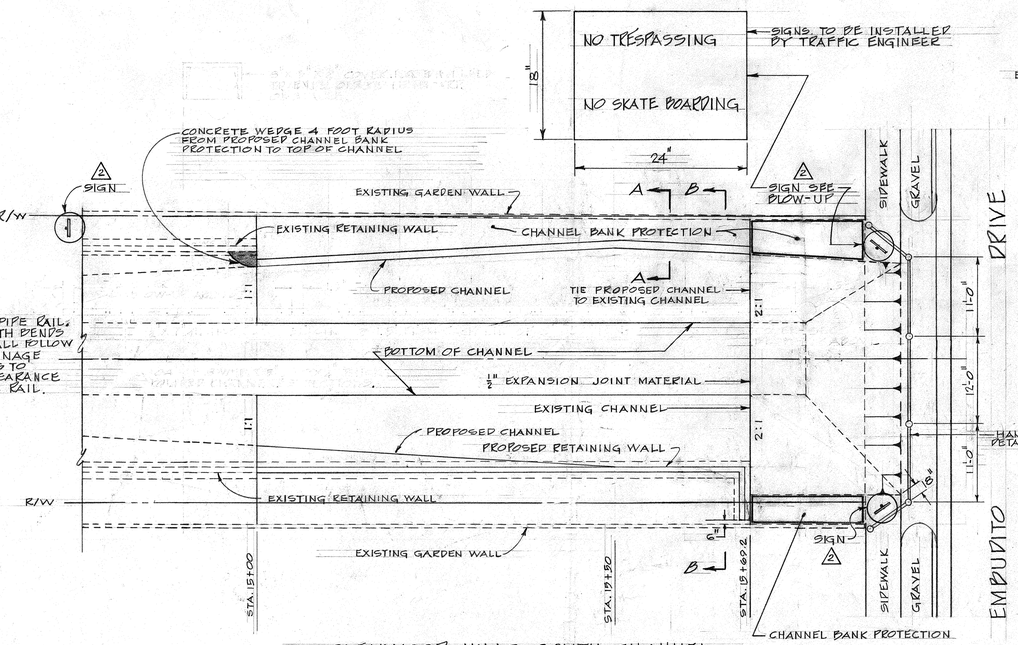


GLENWOOD HILLS SOUTH CHANNEL
PLAN VIEW
SCALE: 1" = 10'

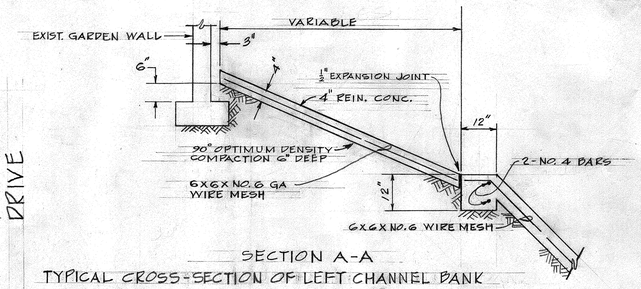


SECTION A-A
TYPICAL CROSS-SECTION OF LEFT CHANNEL BANK
NOT TO SCALE

NOTES:

1. CHANNEL SIDE SLOPE AT STA. 15+69.20 SHALL REMAIN 2:1.
2. CHANNEL SIDE SLOPE AT STA. 15+00 SHALL REMAIN 1:1.
3. CHANNEL BANK PROTECTION STRUCTURE ON NORTH SIDE SHALL HAVE A 3" SEPARATION FROM THE EXISTING GARDEN WALL.
4. RETAINING WALL ON SOUTH SIDE SHALL HAVE A SMOOTH AS POSSIBLE TRANSITION INTO THE SOUTH GARDEN WALL. THE TWO WALLS SHALL HAVE A 6" SEPARATION AS SHOWN IN PLAN VIEW.
5. ALL PROTRUDING WIRE EDGES SHALL BE FOLDED BACK 180°.

NOTES: △2
1. No trespassing signs to be made and installed by Traffic Engineer.
2. All protruding wire edges shall be bent back 180°.

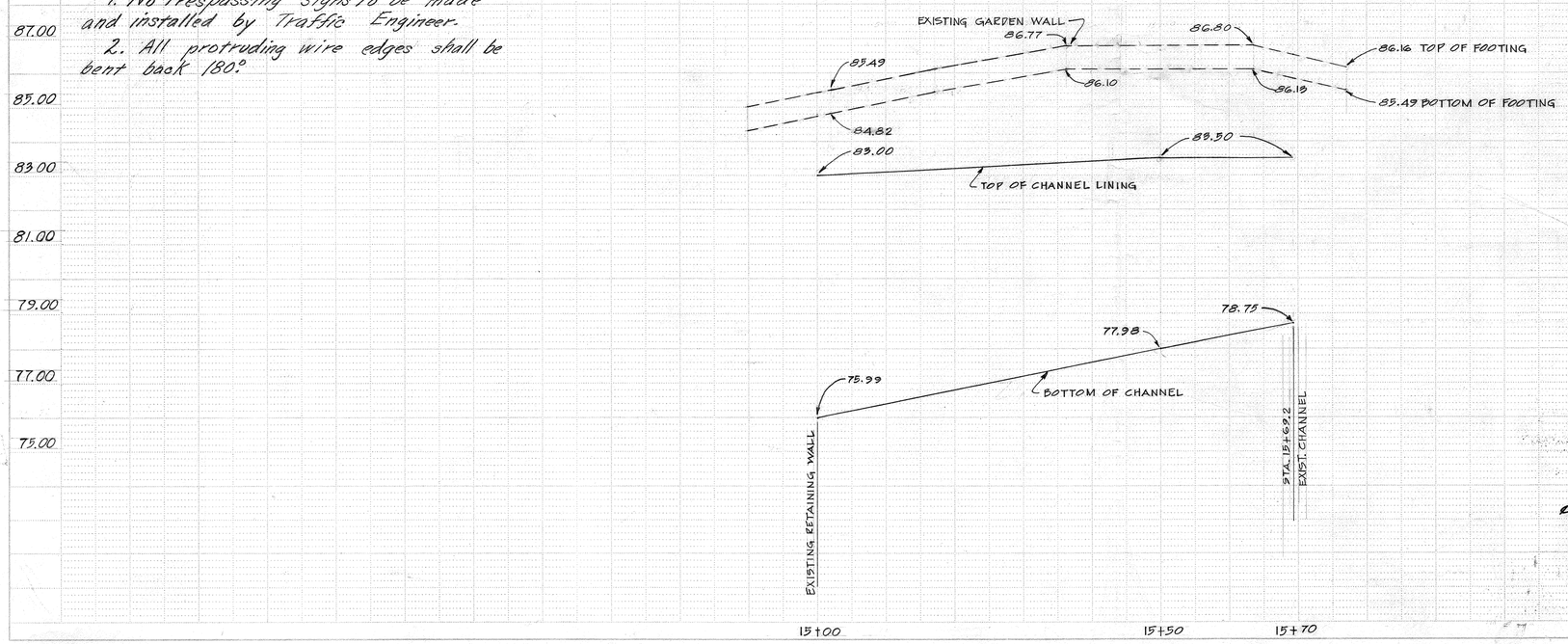


SCALE: HORIZONTAL 1" = 10'
VERTICAL 1" = 2'

**48 HOURS PRIOR TO ANY EXCAVATION, CONTRACTOR MUST CONTACT LINE AND CABLE LOCATING SERVICE, 765-1234, FOR LOCATION OF EXISTING UTILITIES.**

| 1 | 2 | 3 | 4 | 5 | 6 | 7 | 8 | 9 | 10 | 11 | 12 | 13 | 14 | 15 | 16 | 17 | 18 | 19 | 20 | 21 | 22 | 23 | 24 | 25 | 26 | 27 | 28 | 29 | 30 | 31 |
|---|---|---|---|---|---|---|---|---|---|---|---|---|---|---|---|---|---|---|---|---|---|---|---|---|---|---|---|---|---|---|
| 2 | 2 | | 0 | 2 | 2 | | 1 | 1 | 7 | 6 | 1 | | | 0 | 2 | | | | | | | | | | 6 | 0 | 2 | 3 | 2 | |

| APPROVAL OF REVISION △2 | | |
|---|---|---|
| APPROVALS | ENGINEER | DATE |
| CITY ENGINEER | C.A. Chynoweth | 9/22/78 |
| A.C.E DESIGN | [illegible] | 20 Sep 78 |
| TRAFFIC | W.A. Fromaugh | 9/21/78 |
| A.C.E. HYDROLOGY | B. Cuy | 9/22/78 |

Dofig

APPROVED FOR CONSTRUCTION
[illegible] 5-3-78
ENGINEER DATE

CITY OF ALBUQUERQUE
PUBLIC WORKS DEPARTMENT
ENGINEERING DIVISION

TITLE: GLENWOOD HILLS SOUTH ARROYO-REVISION
STA. 15+00 TO STA. 15+69.20

| APPROVALS | ENGINEER | DATE | APPROVALS | ENGINEER | DATE |
|---|---|---|---|---|---|
| City Engineer | | | Liquid Waste | | |
| A.C.E.-Design | [illegible] | 18 Jan 78 | Traffic | | |
| A.C.E.-Hydrology | B. Cuy | 3-27-78 | Water | | |

DRAWING NO. SS-22-76 SHEET 11-A OF 11-A

REFERENCES
MAP NO. G-23 C-H
EST. NO. 55-22-76
W.O. NO. 72

| NO. | DATE | REMARKS | BY |
|---|---|---|---|
| 1 | 1-16-78 | REVISION TO SHEET 11 OF 11 | [illegible] |
| △3 | 3-24-78 | ADDED HAND RAIL | [illegible] |
| △2 | 8-10-78 | ADDED 1"-2" STEEL PIPE & C.L.F. MATERIAL | [illegible] |

REVISIONS
DESIGN
DESIGNED BY David O. Quintana DATE 1-16-78
DRAWN BY T. LARGE DATE 1-16-78
CHECKED BY David O. Quintana DATE 1-17-78

AS BUILT INFORMATION
CONTRACTOR
WORK STAKED BY
INSPECTORS ACCEPTANCE BY
DATE
VERIFICATION BY
DATE
DRAWINGS CORRECTED BY
DATE
MICRO-FILM INFORMATION
RECORDED BY
DATE
NO.

BENCH MARKS
RETURN EMBUDITO & MT. SHADOW 5898.64

SURVEY INFORMATION
FIELD NOTES
NO. BY DATE