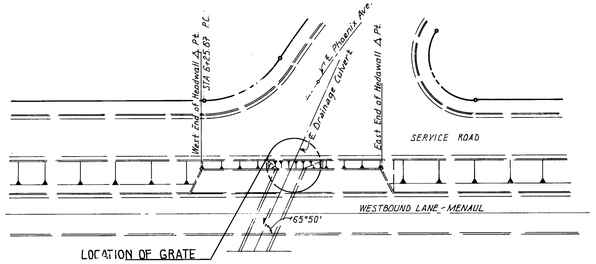

LAYOUT
SCALE - 1" = 40'

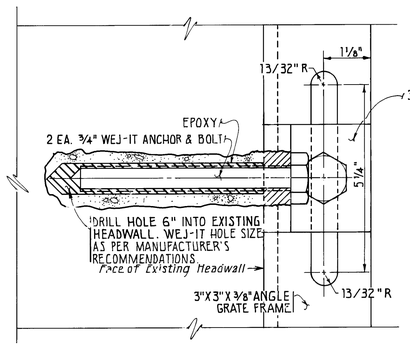

SIDE VIEW

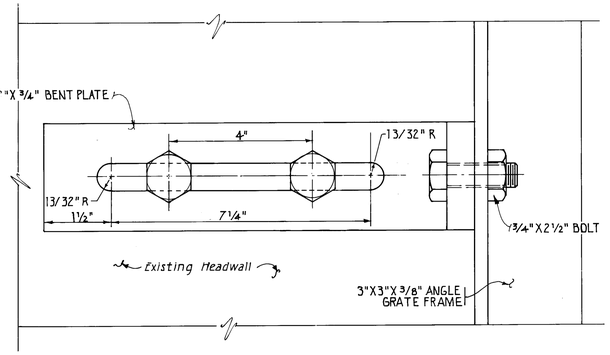

FRONT VIEW

Ⓐ TYPICAL SUPPORT BRACKET CONNECTIONS (6 PLACES)
SCALE 1/2" = 1'-0"

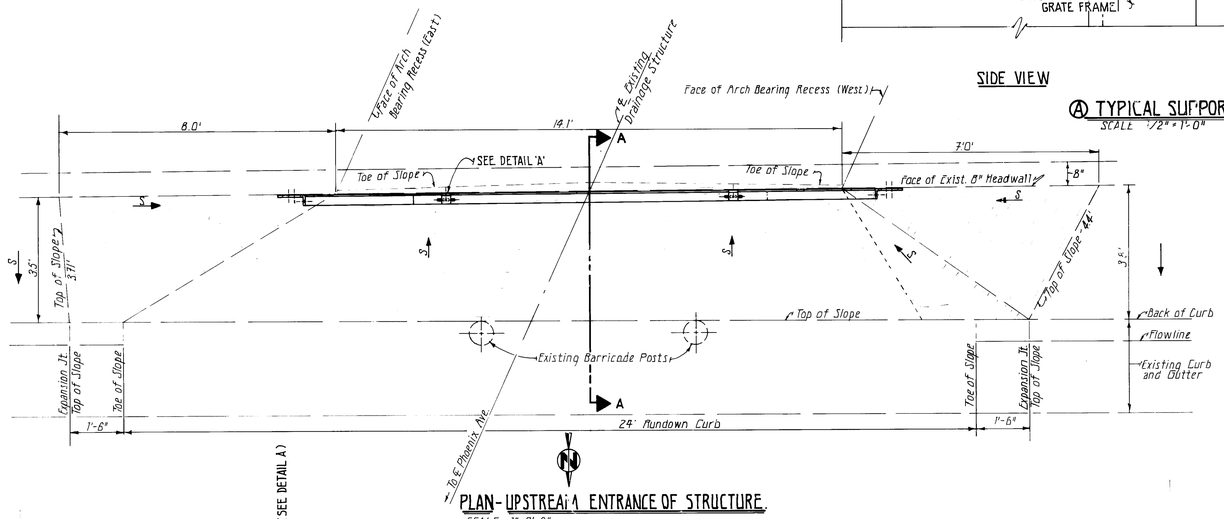

PLAN - UPSTREAM ENTRANCE OF STRUCTURE
SCALE - 1" = 2'-0"

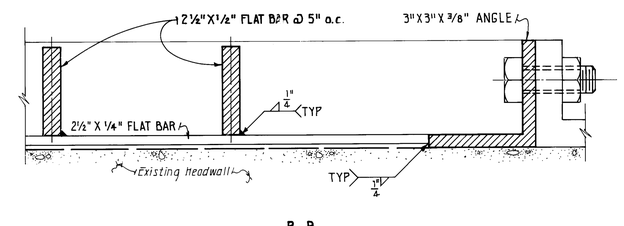

B-B
SCALE - 6" = 1'-0"

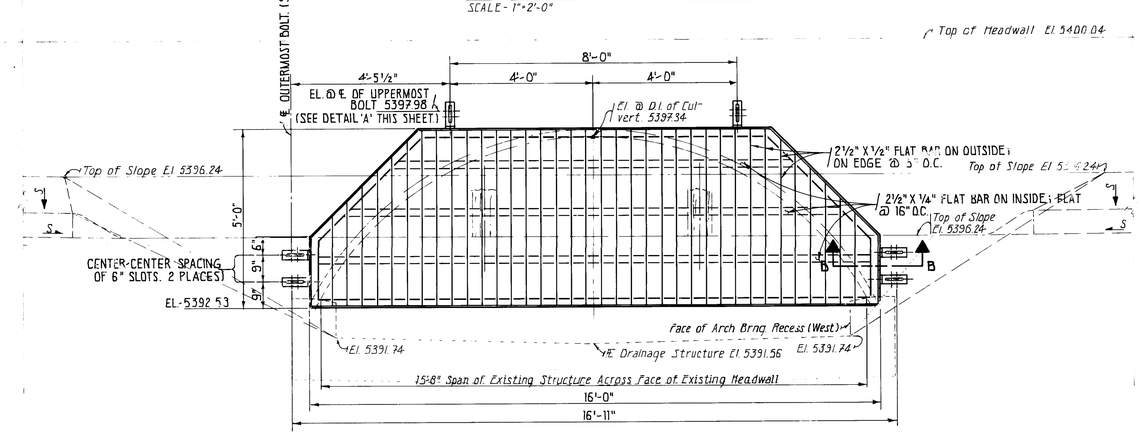

NORTH ELEVATION - UPSTREAM ENTRANCE OF STRUCTURE
SCALE - 1" = 2'-0"

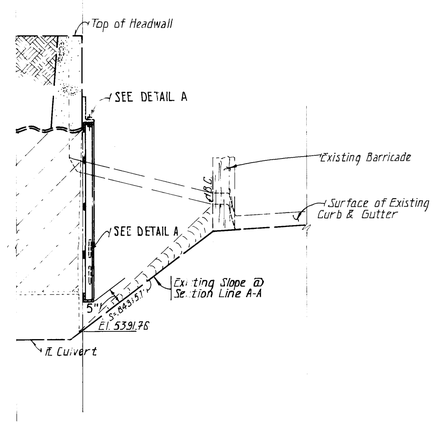

A-A
SCALE - 1" = 2'-0"

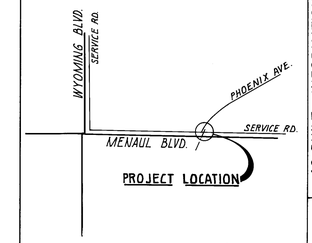

LOCATION MAP

NOTICE TO CONTRACTORS

1. All work detailed on these plans to be performed under contract shall, except as otherwise stated or provided for hereon, be constructed in accordance with the New Mexico Standard Specifications for Public Works Construction-1979 Edition (referred to herein as the Standard Specifications) and the Contract Documents for Public Works Contract 85-1.
2. Two (2) working days prior to any excavation, the contractor must contact Line Locating Service, 765-1234, for location of existing utilities.
3. Prior to construction, the contractor shall excavate and verify the horizontal and vertical locations of all obstructions. Should a conflict exist, the contractor shall notify the engineer or surveyor so that the conflict can be resolved with minimum amount of delay.

THE FOLLOWING NOTES ALSO APPLY WHEN CHECKED

- ☐ All utilities and utility service lines shall be installed prior to paving.
- ☐ Backfill compaction shall be according to specified street use.
- ☐ Tack coat requirements shall be determined by the City Engineer.
- ☐ Sidewalks and wheelchair ramps within the curb returns shall be constructed wherever a new curb return is constructed.
- ☐ If curb is depressed for a drivepad or a handicap ramp, the drivepad or ramp shall be constructed prior to acceptance of the curb and gutter.
- ☐ All storm drainage facilities shall be completed prior to final acceptance.

NOTE:

All exposed metal parts shall be painted with one shop coat Red Oxide, two finish coats Aluminum Paint (AASHO M69) before assembly. Welding, machining and drilling shall be done before painting.

2 6 2 2 5 9 0 1 8 5

APPROVED FOR CONSTRUCTION
C. D. Alexander 5/8/85
CITY ENGINEER DATE

AS BUILT INFORMATION
CONTRACTOR
WORK STAKED BY
INSPECTOR'S ACCEPTANCE BY TONY ORTIZ DATE 4-84
FIELD VERIFICATION BY DATE
DRAWINGS CORRECTED BY L.E.L. DATE 8-21-85
MICRO-FILM INFORMATION
RECORDED BY DATE
NO.

BENCH MARKS
BM-2-H20 STANDARD ACS BRASS TABLET STAMPED "2-H20", SET IN TOP OF A CONCRETE POST FLUSH WITH THE TOP OF CURB.
CITY OF ALBUQUERQUE, BERNALILLO COUNTY NEW MEXICO

SURVEY INFORMATION
FIELD NOTES

NO.	BY	DATE
	AS BUILT INFO	

ENGINEER'S SEAL

NO.	DATE	REMARKS	BY

REVISIONS

DESIGNED BY SERGIO MIRANDA DATE 10-18-84
DRAWN BY M.U. ZAMORA DATE
CHECKED BY G.R.O. DATE JAN. 85

CITY OF ALBUQUERQUE
MUNICIPAL DEVELOPMENT DEPARTMENT
ENGINEERING DIVISION

TITLE: GRATE INSTALLATION-
STRUCTURE FOR DRAINAGE
CROSSING MENAUL BLVD.

APPROVALS	ENGINEER	DATE	APPROVALS	ENGINEER	DATE
City Engineer	C.D. Alexander	1/3/85	Liquid Waste	William Baker	12/12/84
A.C.E.-Design	H.R. Olson	1/3/85	Traffic	N.A. Dwyer	12/12/84
A.C.E.-Hydrology	Jim Jones	12/11/84	Water	William Baker	12/12/84

DRAWING NO.	MAP NO.	SHEET	OF
2259	H-20	1	1