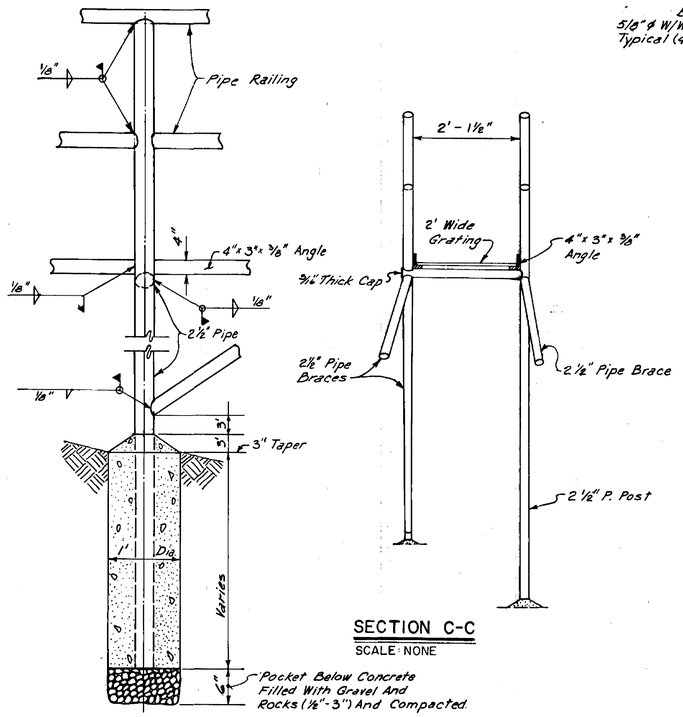

TYPICAL PIPE AND COLUMN

SCALE: NONE

SECTION C-C

SCALE: NONE

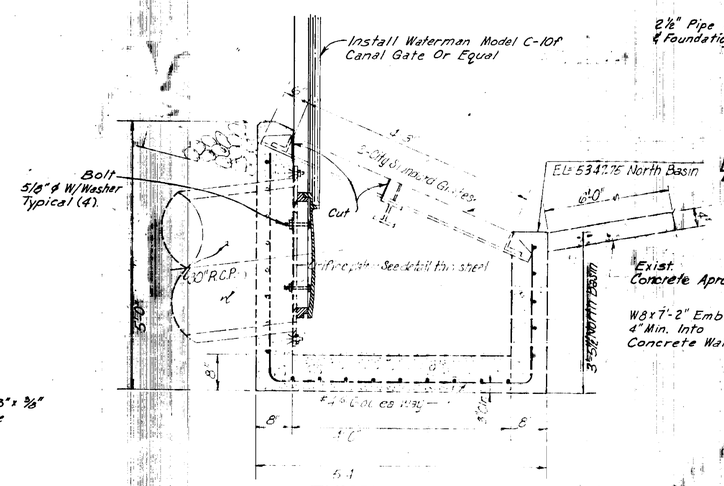

EXIST. OUTLET STRUCTURE SECTION A-A

SCALE: 3/4"=1'-0"

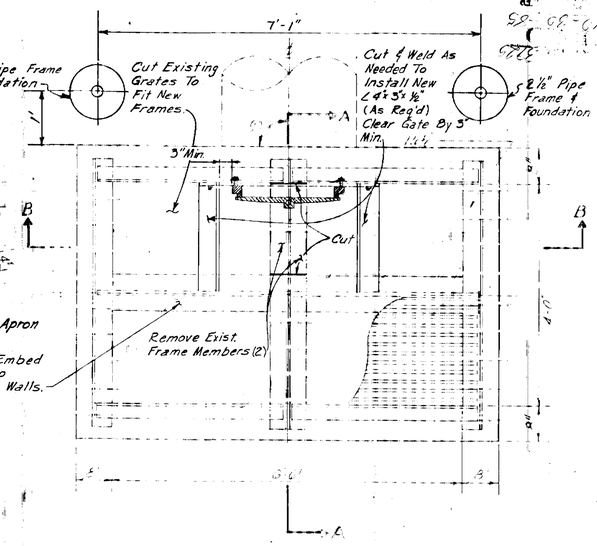

PLAN

SCALE: 3/4"=1'-0"

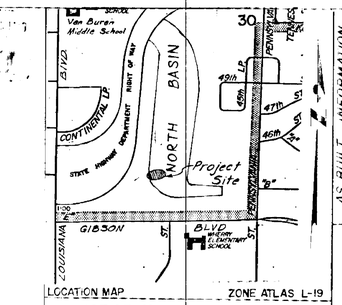

LOCATION MAP ZONE ATLAS L-19

NOTICE TO CONTRACTORS

1. All work detailed on these plans to be performed under contract shall, except as otherwise stated or provided for hereon, be constructed in accordance with the City of Albuquerque Interim Standard Specifications for Construction 1985.

2. Two (2) working days prior to any excavation, the contractor must contact Line Locating Service, 765-1234, for location of existing utilities.

3. Prior to construction, the contractor shall excavate and verify the horizontal and vertical locations of all obstructions. Should a conflict exist, the contractor shall notify the engineer or surveyor so that the conflict can be resolved with minimum amount of delay.

THE FOLLOWING NOTES ALSO APPLY WHEN CHECKED

- ☐ All utilities and utility service lines shall be installed prior to paving.
- ☐ Backfill compaction shall be according to specified street use.
- ☐ Tack coat requirements shall be determined by the City Engineer.
- ☐ Sidewalks and wheelchair ramps within the curb returns shall be constructed wherever a new curb return is constructed.
- ☐ If curb is depressed for a driveway or a handicap ramp, the driveway or ramp shall be constructed prior to acceptance of the curb and gutter.
- ☐ All storm drainage facilities shall be completed prior to final acceptance.

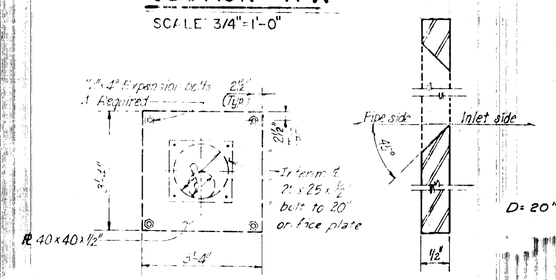

ORIFICE PLATE DETAIL

SCALE: 1/2"=1'-0"

ORIFICE BEVEL DETAIL

SCALE: 1/2"=1'-0"

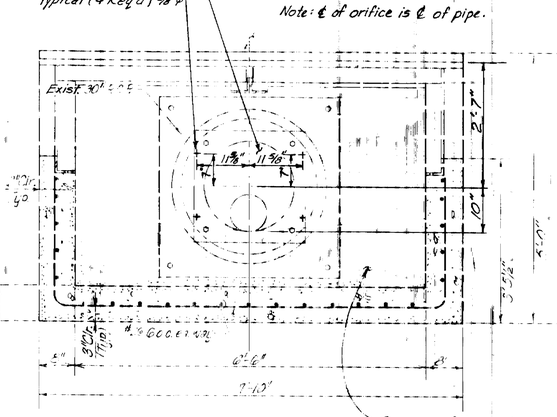

SECTION B-B

SCALE: 3/4"=1'-0"

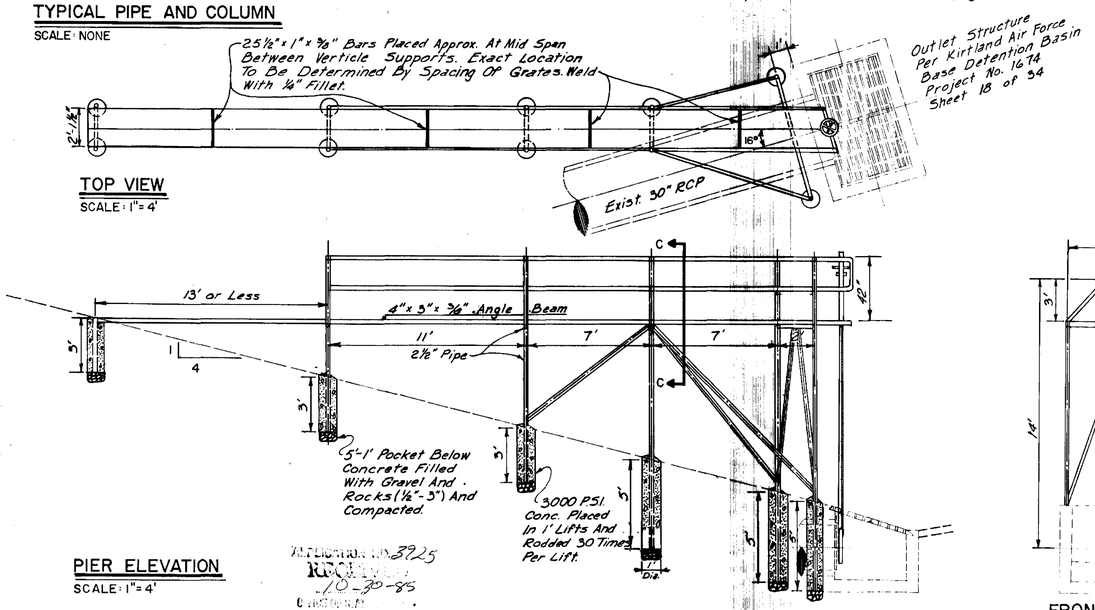

TOP VIEW

SCALE: 1"=4'

PIER ELEVATION

SCALE: 1"=4'

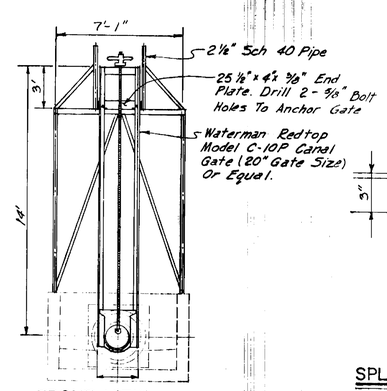

FRONT VIEW

SCALE: 1"=4'

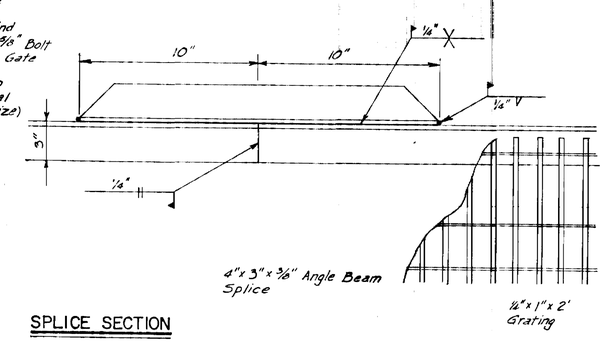

SPLICE SECTION

AS BUILT INFORMATION

CONTRACTOR	DATE
WORK STAKED BY	DATE
INSPECTORS ACCEPTANCE BY	DATE
VERIFICATION BY	DATE
DRAWINGS CORRECTED BY	DATE
MICRO-FILM INFORMATION	
REFILMED BY	DATE
NO.	

BENCH MARKS

SURVEY INFORMATION

FIELD NOTES	BY	DATE
NO.		

ENGINEER'S SEAL

NO.	DATE	REMARKS	BY
		REVISIONS	

DESIGNED BY Phil Fischer DATE , 1985
DRAWN BY A.J. Olivas Sr. DATE , 1985
CHECKED BY A.K.O. DATE 10/18/85

CITY OF ALBUQUERQUE
MUNICIPAL DEVELOPMENT DEPARTMENT
ENGINEERING DIVISION

TITLE PIER ON THE NORTH PONDING AREA AT KIRTLAND AIR FORCE BASE DETENTION BASIN

APPROVALS	ENGINEER	DATE	APPROVALS	ENGINEER	DATE
City Engineer		10/18/85	Solid Waste	NA	10/18/85
Asst. Design		10/18/85	Traffic	NA	10/18/85
Asst. Hydrology		10/18/85	Water	NA	10/18/85
N.M.S. ENGINEER		10/18/85	K.A.F.B. ENGR.		10/18/85

DRAWING NO	MAP NO	SHEET	OF
2675	L-19	1	1

APPLICATION NO. 3925
RECEIVED
10-30-85
CONDITIONS

File 3925

Rec'd 10/30/85