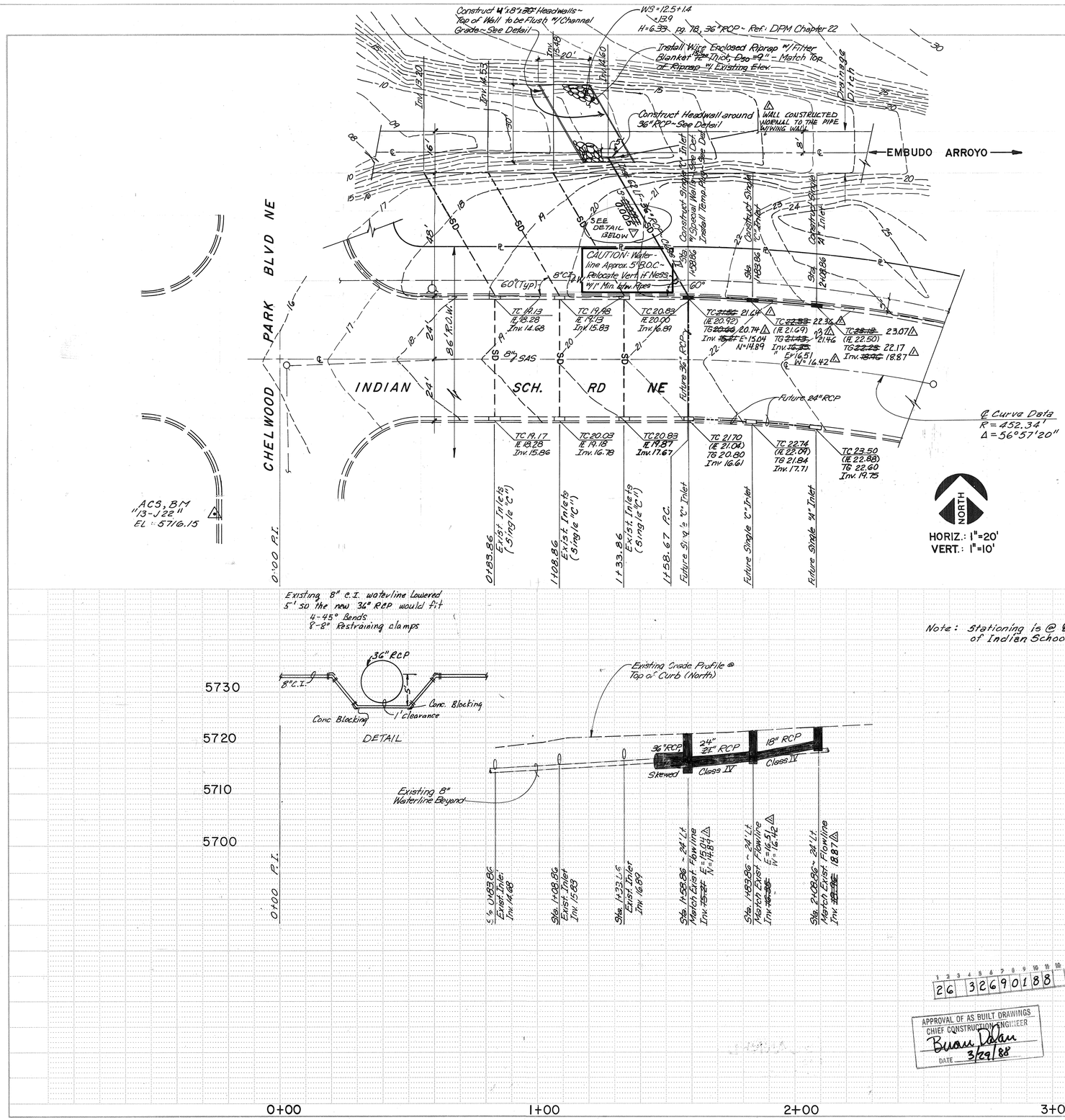

Note: Stationing is @ ℄ of Indian School Rd.

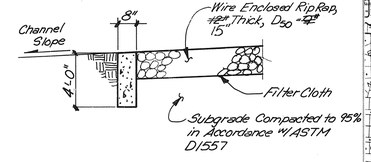

SECTION @ HEADWALL & RIPRAP

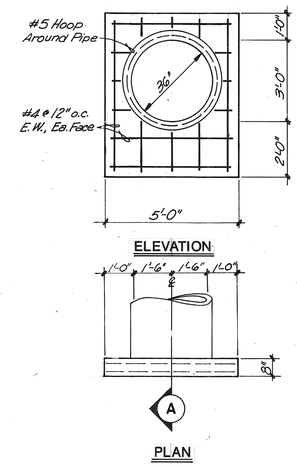

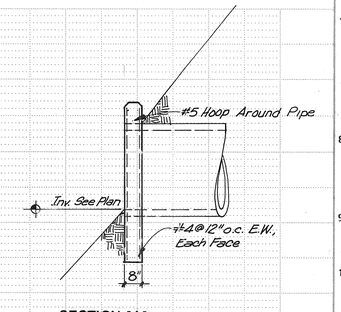

SECTION "A"

CONCRETE HEADWALL FOR CONCRETE PIPE

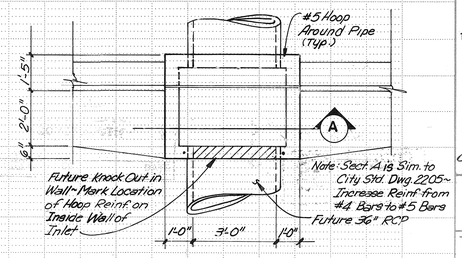

PLAN

SPECIAL STORM INLET (SIM. TO SINGLE "C") WITH TEMPORARY PLUG

VICINITY MAP J-22-Z

NOTICE TO CONTRACTOR

1. ALL WORK DETAILED ON THESE PLANS TO BE PERFORMED UNDER CONTRACT SHALL, EXCEPT AS OTHERWISE STATED OR PROVIDED FOR HEREON, BE CONSTRUCTED IN ACCORDANCE WITH THE "CITY OF ALBUQUERQUE, STANDARD SPECIFICATIONS FOR PUBLIC WORKS CONSTRUCTION, 1986" (COA STND).
2. TWO (2) WORKING DAYS PRIOR TO ANY EXCAVATION, CONTRACTOR MUST CONTACT LINE LOCATING SERVICE, 765-1234, FOR LOCATION OF EXISTING UTILITIES.
3. PRIOR TO CONSTRUCTION, THE CONTRACTOR SHALL EXCAVATE AND VERIFY THE HORIZONTAL AND VERTICAL LOCATIONS OF ALL OBSTRUCTIONS. SHOULD A CONFLICT EXIST, THE CONTRACTOR SHALL NOTIFY THE ENGINEER OR SURVEYOR SO THAT THE CONFLICT CAN BE RESOLVED WITH MINIMUM AMOUNT OF DELAY.
4. BACKFILL COMPACTION SHALL BE ACCORDING TO SPECIFIED STREET USE.
5. ALL STORM DRAINAGE FACILITIES SHALL BE COMPLETED PRIOR TO FINAL ACCEPTANCE.
6. THE CONTRACTOR SHALL PROMPTLY CLEAN UP ANY MATERIAL EXCAVATED WITHIN THE PUBLIC RIGHT-OF-WAY SO THAT THE EXCAVATED MATERIAL IS NOT SUSCEPTIBLE TO BEING WASHED DOWN THE STREET.
7. CONTRACTOR SHALL ASSIST THE ENGINEER/INSPECTOR IN THE RECORDING OF DATA ON ALL UTILITY LINES AND ACCESSORIES AS REQUIRED BY THE CITY OF ALBUQUERQUE FOR THE PREPARATION OF "AS CONSTRUCTED" DRAWINGS. CONTRACTOR SHALL NOT COVER UTILITY LINES AND ACCESSORIES UNTIL ALL DATA HAS BEEN RECORDED.
8. CURB AND GUTTER SHOWN AS EXISTING AND NOT TO BE REMOVED UNDER THE CONTRACT WHICH IS DAMAGED OR DISPLACED BY THE CONTRACTOR SHALL BE REMOVED AND REPLACED BY THE CONTRACTOR AT HIS EXPENSE.
9. WHEN CONSTRUCTION UNDER THIS PROJECT CONNECTS TO EXISTING IMPROVEMENTS, THE CONTRACTOR SHALL PROVIDE AN EASY RIDING CONNECTION.
10. ALL WORK ON THIS PROJECT SHALL BE PERFORMED IN ACCORDANCE WITH APPLICABLE FEDERAL, STATE AND LOCAL LAWS, RULES AND REGULATIONS CONCERNING CONSTRUCTION SAFETY AND HEALTH.
11. CONTRACTOR SHALL PROVIDE 12" SUBGRADE PREPARATION UNDER ALL NEW PAVEMENT, CURBS AND GUTTERS, VALLEY GUTTERS AND CONCRETE FILLETS.
12. WHEN ABUTTING NEW PAVEMENT TO EXISTING, CUT BACK EXISTING PAVEMENT TO A NEAT, STRAIGHT LINE AS REQUIRED TO REMOVE ANY BROKEN OR CRACKED PAVEMENT, AND MATCH NEW TO EXISTING.

APPROVED FOR CONSTRUCTION
CITY ENGINEER 7/24/87

APPROVAL OF AS BUILT DRAWINGS
CHIEF CONSTRUCTION ENGINEER
Bruce Dolan
DATE 3/29/88

SCANNED BY

AS BUILT INFORMATION	
CONTRACTOR	Sundance Mech
WORK STAKED BY	
INSPECTORS ACCEPTANCE BY	E. Bryant
DATE	11/13/87
FIELD VERIFICATION BY	
DATE	
DRAWINGS CORRECTED BY	E.N.
DATE	3/25/88
RECORDED BY	MICRO-FILM INFORMATION
DATE	
NO.	

BENCH MARKS

The Station is a standard A.C.S. brass cap stamped "13-J22, 1979" located in the Southwest quadrant of the of Indian School Rd & Chelwood Dr. NE. Elevation in feet = 5716.15.

SURVEY INFORMATION

FIELD NOTES		
NO.	BY	DATE
3269	City Survey	4/5/87

ENGINEER'S SEAL

VICTOR J. CHAVEZ, NEW MEXICO, 5123, REGISTERED PROFESSIONAL ENGINEER

REVISIONS			
NO.	DATE	REMARKS	BY
1	3/25/88	Revised as built information	E.N.

DESIGN		
DESIGNED BY	J.S.H.	DATE June-87
DRAWN BY	R	DATE June-87
CHECKED BY	V.J.C.	DATE June-87

CITY OF ALBUQUERQUE
PUBLIC WORKS DEPARTMENT
ENGINEERING GROUP

TITLE: NE COR. CHELWOOD PK. & INDIAN SCH. RD NE
HIGH RIDGE SHOPPING CENTER
3 - STORM INLETS

APPROVALS	ENGINEER	DATE	APPROVALS	ENGINEER	DATE
D.R.C. Chair		7/10/87			
Trans. Dev.		6/24/87			
Utility Dev.		6-24-87			

DRAWING NO.	MAP NO.	SHEET	OF
3269	J-22-Z	1	1