CITY OF ALBUQUERQUE

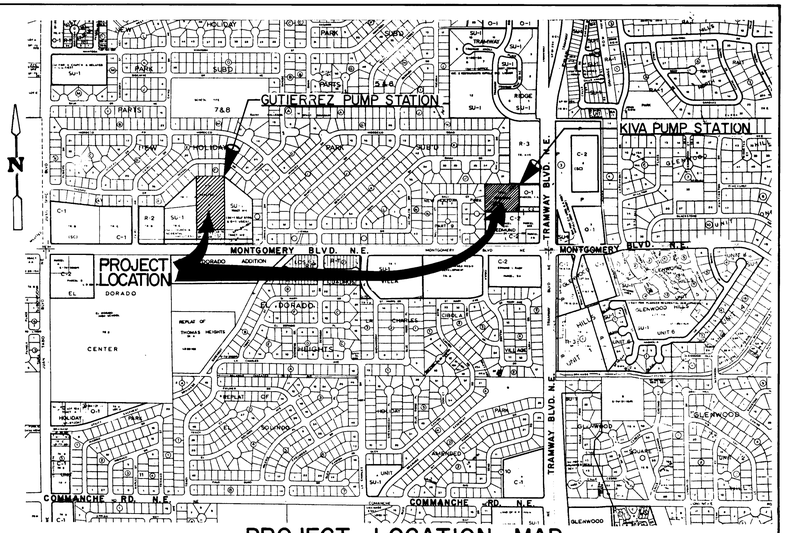

PROJECT LOCATION MAP
SCALE: 1" = 800' ±
ZONE ATLAS: F-22

GUTIERREZ PUMP STATION RECONSTRUCTION AND KIVA LANDSCAPE IMPROVEMENTS

GENERAL NOTES

1. ALL WORK DETAILED ON THESE PLANS TO BE PERFORMED UNDER CONTRACT SHALL, EXCEPT AS OTHERWISE STATED OR PROVIDED FOR HEREON, BE CONSTRUCTED IN ACCORDANCE WITH THE CITY OF ALBUQUERQUE STANDARD SPECIFICATIONS FOR PUBLIC WORKS CONSTRUCTION - 1986 EDITION (REFERRED TO HEREIN AS THE STANDARD SPECIFICATIONS).
2. FIVE (5) WORKING DAYS PRIOR TO ANY EXCAVATION, CONTRACTOR MUST CONTACT NEW MEXICO ONE CALL, 260-1990, FOR LOCATION OF EXISTING UTILITIES. THE CONTRACTOR SHALL EXERCISE DUE CARE TO AVOID DISTURBING EXISTING UNDERGROUND UTILITIES. IT SHALL BE HIS RESPONSIBILITY TO COORDINATE WITH THE UTILITY COMPANIES IN ORDER TO PREVENT ANY SERVICE DISRUPTION.
3. PRIOR TO CONSTRUCTION, THE CONTRACTOR SHALL EXCAVATE AND VERIFY THE HORIZONTAL AND VERTICAL LOCATIONS OF ALL OBSTRUCTIONS. SHOULD A CONFLICT EXIST, THE CONTRACTOR SHALL NOTIFY THE ENGINEER OR SURVEYOR SO THAT THE CONFLICT CAN BE RESOLVED WITH MINIMUM AMOUNT OF DELAY.
4. ALL UTILITIES AND UTILITY SERVICE LINES SHALL BE INSTALLED PRIOR TO PAVING.
5. BACKFILL COMPACTION SHALL BE ACCORDING TO SPECIFIED STREET USE.
6. TACK COAT REQUIREMENTS SHALL BE DETERMINED BY THE CITY ENGINEER.
7. IF CURB IS DEPRESSED FOR A DRIVEPAD OR A HANDICAP RAMP, THE DRIVEPAD OR RAMPS SHALL BE CONSTRUCTED PRIOR TO ACCEPTANCE OF THE CURB AND GUTTER.
8. ALL STORM DRAINAGE FACILITIES SHALL BE COMPLETED PRIOR TO FINAL ACCEPTANCE.
9. CONTRACTOR SHALL BE FULLY RESPONSIBLE FOR COORDINATION WITH THE WATER SYSTEMS PROJECT MANAGER (857-8200) FIVE (5) WORKING DAYS PRIOR TO ANY WORK NEEDING THE EXECUTION OF THE WATER VALVE SHUT-OFF PLAN.
10. CONTRACTOR SHALL MAINTAIN SAFE ACCESS FOR CITY CREWS TO OPERATE AND MAINTAIN FACILITIES AT ALL TIMES DURING THE CONSTRUCTION PERIOD.

INDEX OF SHEETS

SHEET NO.	TITLE
1 OF 15	COVER
2 OF 15	LEGEND
3 OF 15	INITIAL AND FINAL DEMOLITION PLAN
4 OF 15	SITE LAYOUT AND GRADING
5 OF 15	YARD PIPING
6 OF 15	BUILDING ELEVATIONS
7 OF 15	FOUNDATION PLAN
8 OF 15	FOUNDATION AND PIT DETAILS
9 OF 15	FLOOR AND PIPING PLAN
10 OF 15	PIPING SECTIONS
11 OF 15	WALL SECTIONS
12 OF 15	ROOF FRAMING AND DRAINAGE PLAN
13 OF 15	MISCELLANEOUS STRUCTURAL DETAILS
14 OF 15	MISCELLANEOUS PIPING DETAILS
15 OF 15	PIPE CRADLE, RESTRAINT AND STRAP DETAILS
	UTILITIES
U-1 OF U-2	4" SANITARY SEWER PLAN AND PROFILE
U-2 OF U-2	WATER SHUT-OFF PLAN
	MECHANICAL
M1 OF 3	MECHANICAL FLOOR PLAN
M2 OF 3	MECHANICAL DETAILS
M3 OF 3	MECHANICAL SCHEDULE AND DETAILS
	ELECTRICAL
E-1	ELECTRICAL LEGEND
E-2	ELECTRICAL SITE PLAN
E-3	ELECTRICAL ONE-LINE DIAGRAM
E-4	LIGHTING/RECEPTACLE PLAN
E-5	MECHANICAL SYSTEMS ELECTRICAL PLAN
E-6	WATER SYSTEMS ELECTRICAL PLAN
E-7	GROUNDING/LIGHTNING PROTECTION SYSTEM PLAN
E-8	SCHEDULES
E-9	CONTROL SCHEMATICS
E-10	CONTROL SCHEMATICS
E-11	CONTROL SCHEMATICS
E-12	INTERCONNECTION DIAGRAMS - PUMP NO. 1
E-13	INTERCONNECTION DIAGRAMS - PUMP NO. 2
E-14	INTERCONNECTION DIAGRAMS - PUMP NO. 3
E-15	INTERCONNECTION DIAGRAMS - PUMP NO. 4
E-16	INTERCONNECTION DIAGRAMS - MISC.
E-17	INTERCONNECTION DIAGRAMS - MISC.
E-18	DETAILS
E-19	DETAILS
	LANDSCAPING
GL-1	IRRIGATION PLAN
GL-2	PLANTING PLAN
KL-1	IRRIGATION PLAN
KL-2	PLANTING PLAN
KL-3	IRRIGATION DETAILS AND NOTES
KL-4	PLANTING DETAILS AND PLANT LIST
	CONTROLS AND INSTRUMENTATION
I-1	PIPING AND INSTRUMENT DIAGRAM
I-2	PIPING AND INSTRUMENT DIAGRAM
I-3	PIPING AND INSTRUMENT DIAGRAM

CODE DESIGN DATA

Occupancy Group: B4
Type of Construction: IV N
Area of Each Floor: 2737
Occupant Load: 8
Seismic Zone: 2B
Soil Bearing Capacity: 2,000 psf
Concrete Strength: 3000 psi
Stress Values:
Lumber: NA Steel: 36ksi
Wind Design Load: 75 mph
Roof Design Load: DL-15psf LL-20psf
Floor Design Load: LL 100psf/950# conc
Corridor Design Load: NA
Alb. Bldg. Code 301(d)

RECORD DRAWING
DATE FEB 1992
These drawings have been reviewed [illegible] field data and every reasonable effort has been made to depict construction as actually performed.

APPROVAL OF AS BUILT DRAWINGS
CHIEF CONSTRUCTION ENGINEER
DATE 1/30/92

26 3337.90 01 92

REV	SHEETS	CITY ENGINEER	DATE	USER DEPT.	DATE	USER DEPT.	DATE

APPROVAL OF REVISIONS

E. WAYNE WOLFF
NEW MEXICO
8574
REGISTERED PROFESSIONAL ENGINEER

LEEDSHILL-HERKENHOFF, INC.
Copper Square, 500 Copper Ave. N.W.
P.O. Box 1217
Albuquerque, New Mexico 87103
(505) 247-0294

APPROVED FOR CONSTRUCTION
11-16-90 C.E.

PROJECT NO. 333790

SHEET 1 OF 15

LEGEND

PROPOSED	EXISTING	DESCRIPTION
NA		SANITARY SEWER MANHOLE
NA		STORM DRAIN MANHOLE
NA	TELE MH	TELEPHONE MANHOLE
SAS 8"CP	SAS 8" CP	SANITARY SEWER LINE W/SIZE & TYPE
NA	SD 48" RCP	STORM DRAIN LINE W/SIZE & TYPE
W 6"CI	W 6" CI	WATER LINE W/SIZE & TYPE
NA	E	OVERHEAD ELECTRICAL LINES
UE	UE	UNDERGROUND ELECTRICAL / TRAFFIC CONTROL
UT	UT	UNDERGROUND TELEPHONE
G	G 2" H.P.	GAS LINES W/SIZE & TYPE
NA	CT	CABLE TELEVISION LINES
NA		ENCASEMENT
NA		STORM DRAIN INLETS (GRADE ELEVATION GIVEN IN PLANS IS EXTENDED FLOW LINE)
		GATE VALVE
		BUTTERFLY VALVE
		FIRE HYDRANTS
		REDUCERS
NA		SANITARY SEWER SERVICE CONNECTION
NA		WATER SERVICE CONNECTION
		TEES
NA		CROSSES
		BENDS
		CAPS & PLUGS
NA	WM	WATER METER
VB, VB	VB,	VALVE BOX, VALVE BOX W/CONCRETE RING
NA	PP	POWER POLE
NA	LP	LIGHT POLE
NA	TL	TRAFFIC LIGHT
NA	TC	TRAFFIC CONTROL BOX
NA	PB	PULL BOX
NA	TB	TELEPHONE BOOTH
		CURB & GUTTER
NA	4' S.W.	SIDEWALK
NA		BLOCK WALL
NA		CHAIN LINK FENCE
NA		FIELD FENCE
6543	NA	SPOT ELEVATIONS
NA		PROJECT/ PHASE BOUNDARY
NA		RIGHT OF WAY LINES
NA		PROPERTY LINES (SIDE)
NA		PUBLIC EASEMENTS
	NA	CONSTRUCTION THIS PROJECT SPECIFIED ON DIFFERENT SHEET
NA	NA	LIGHT POLE BASE

PROPOSED	EXISTING	DESCRIPTION
NA	EXISTING	RESIDENTIAL PAVING
		ARTERIAL PAVING
	EXISTING	CONCRETE PAVING
NA		TEMPORARY PAVING
NA		WHEELCHAIR RAMP
NA		TREES
5700	5700	CONTOUR

CROSS REFERENCES:

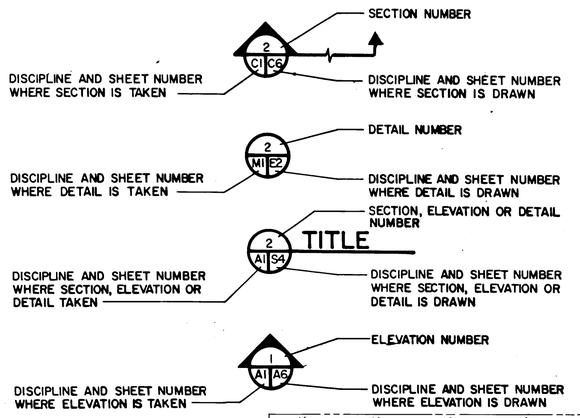

ABBREVIATIONS

A.B.	ANCHOR BOLT	PRC	POINT OF REVERSE CURVE
A.F.F.	ABOVE FINISHED FLOOR	PT	POINT OF TANGENT
BOC	BACK OF CURB	REQ'D.	REQUIRED
BRG.	BRIDGING	RT.	RIGHT
CI.	CAST IRON	RTB	REMOTE TERMINAL UNIT TERMINAL BOX
CCYL	CONCRETE CYLINDER	RTU	REMOTE TERMINAL UNIT
CLR.	CLEAR	SHT.	SHEET
C.O.A.	CITY OF ALBUQUERQUE	SIM.	SIMILAR
COMP.	COMPRESSOR	SQ.	SQUARE
CONT.	CONTINUOUS	STA.	STATION
DN	DOWN	STD.	STANDARD
DWG	DRAWINGS	SVY	SURVEY
EA.	EACH	TC	TOP OF CURB
E.F.	EACH FACE	TR	TELEPHONE RISER
EL.	ELEVATION	TRANS	TRANSFORMER
E.W.	EACH WAY	TYP.	TYPICAL
FIN. FLR.	FINISHED FLOOR	T.O.C.	TOP OF CONCRETE
FL	FLANGE	T.O.S.	TOP OF SLAB
GA.	GAGE	T&B	TOP AND BOTTOM
GALV.	GALVANIZED	VAR.	VARIES
GYP.	GYPSUM	WR	WATER RESISTANT
INST.	INSTRUMENT	W/	WITH
INV.	INVERT		
LBS.	POUNDS		
LT.	LEFT	L	ANGLE
MCC	MOTOR CONTROL CENTER	℄	CENTERLINE
MFGR.	MANUFACTURER	PL	PLATE
MIN.	MINIMUM	@	AT
NO.	NUMBER	ø	DIAMETER
NOM.	NOMINAL	&	AND
NPT	NATIONAL PIPE THREAD	#	POUNDS
NTS	NOT TO SCALE		
O.C.	ON CENTER		
OPNG.	OPENING		
OPP.	OPPOSITE		
PI	POINT OF INTERSECTION		
PC	POINT OF CURVE		
PE	PLAIN END		

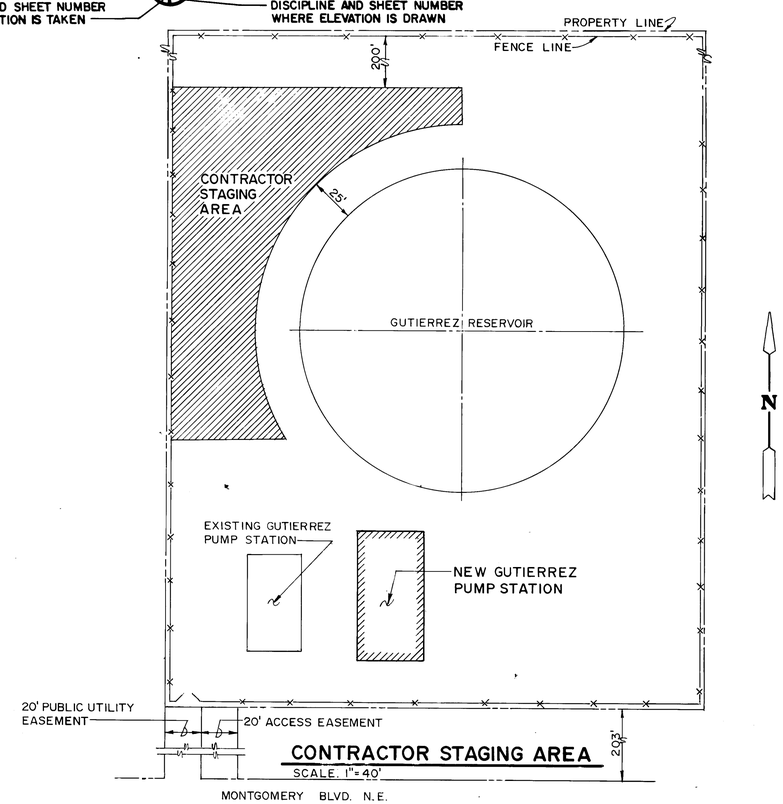

RECORD DRAWING
FEB 1992
These drawings have been revised based on field data and every reasonable effort has been made to depict construction as actually performed

26 3337.90 02 92

AS BUILT INFORMATION
CONTRACTOR: MCC Construction Co.
WORK STAKED BY: SURVEYING CO. INC. DATE 8/91
INSPECTOR: WESTERN SURVEYING DATE 12/91
ACCEPTANCE BY: WESTERN SURVEYING DATE 12/91
FIELD VERIFICATION BY: EDGE SMITH DATE 12/91
DRAWINGS CORRECTED BY: EDGE SMITH DATE 2/92
MICRO-FILM INFORMATION
RECORDED BY
DATE
NO

BENCH MARKS

SURVEY INFORMATION
FIELD NOTES
NO. BY DATE

ENGINEER'S SEAL
R. WAYNE WELTY NEW MEXICO 4576 REGISTERED PROFESSIONAL ENGINEER

NO.	DATE	REMARKS	BY
		REVISIONS	

DESIGN
DESIGNED BY K.W. WELTY DATE JUNE 1990
DRAWN BY L-H, INC. DATE JUNE 1990
CHECKED BY K.W. WELTY DATE JUNE 1990

CITY OF ALBUQUERQUE
PUBLIC WORKS DEPARTMENT
ENGINEERING GROUP

TITLE: GUTIERREZ PUMP STATION RECONSTRUCTION, LEGEND, GENERAL NOTES AND ABBREVIATIONS

APPROVALS	ENGINEER	DATE	APPROVALS	ENGINEER	DATE
DRC Chair					
Trans. Div.		11-14-90			
Utility Div.	R.W. Kane	11-13-90			
City Engr.		11-15-90			

PROJECT NO. 333790 | MAP NO F-22 | SHEET 2 OF 15

SURVEY BASELINE

EXISTING GUTIERREZ RESERVOIR

REMOVE EXISTING 30" CCYL. AND VALVE BOX AND INSTALL BLIND FLANGE ON EXISTING VALVE, BLOCKING.

REMOVE EXISTING FIRE HYDRANT

REMOVE 1/4" COPPER GAGE LINE AND CONDUIT FOR NEW GAGE LINE SEE SHEET 5

REMOVE TELEPHONE COMM. CABLE TO RISER, COORDINATE WITH U S WEST

REMOVE EXISTING SIDEWALK, ASPHALT PAVEMENT, CURB AND GUTTER (TYP.)

REMOVE UNDERGROUND PRIMARY 7200/12470 V 3ø 4W TO POLE

REMOVE LEVEL PROBE CONDUIT TO BASE OF STAIRS.

EXISTING TREES TO BE REMOVED (15 TOTAL) ALL OTHERS TO REMAIN

DECIDUOUS TREES (TYP.)

EVERGREEN TREES (TYP.)

REMOVE EXISTING GUTIERREZ PUMP STATION

GAS CO. TO REMOVE METER AND GASLINE. FOR LOCATION OF NEW GASLINE, SEE SHEET 5.

NEW GUTIERREZ PUMP STATION

(SEE FLOOR AND PIPING PLAN, SHT. 9)

ELECTRICAL EQUIPMENT PAD

REMOVE EXISTING 24"CCYL PIPE. INSTALL BLIND FLANGE ON CROSS BLOCKING.

REMOVE 2" GALV. STEEL PIPE TO STORM DRAIN

ANTENNA TOWER

REPEATER STATION

REMOVE EXISTING 6" DUCTILE IRON PIPE AND VALVE.

REMOVE 24" VALVE. REPLACE WITH NEW 30" BUTTERFLY VALVE, BLOCKING AND VALVE BOX (TYPE B).

REMOVE EXISTING 24"x24"x24"x 24" CROSS. REPLACE WITH 1-24"x24"x30"x24" CROSS.

REMOVE AND REPLACE WITH 2 NEW 24" BUTTERFLY VALVES, BLOCKING, AND VALVE BOXES (TYPE B) ℄ EL. ±5779.00

REMOVE EXISTING FENCE, TRANSFORMER, PAD AND CURB. SALVAGE TRANSFORMER TO CITY.

REMOVE UNDERGROUND SECONDARY 2300V 3ø 3W TO BUILDING. TO BUILDING

STA. 12+06 PAVEMENT REMOVAL LIMIT SAWCUT EXISTING PAVEMENT AND CURB AND GUTTER

CURB

EDGE OF EXISTING PAVEMENT

CONCRETE WALL

SURVEY BASELINE

INITIAL AND FINAL DEMOLITION PLAN

SCALE: 1" = 10'-0"

N

NOTES:

1. TREE REMOVALS AND IRRIGATION SYSTEM RELOCATIONS SHOWN ON LANDSCAPING SHEET. IRRIGATION SYSTEM NOT SHOWN ON THIS SHEET FOR CLARITY.
2. ALL EXISTING ITEMS SHOWN IN THE LEGEND ON THIS SHEET SHALL BE REMOVED IN ACCORDANCE WITH THESE DRAWINGS AND SPECIFICATIONS. ALL OTHERS TO REMAIN UNDISTURBED.
3. PHASING OF DEMOLITION ITEMS AND ITEMS TO BE SALVAGED ARE AS OUTLINED IN SPECIFICATIONS.
4. NEW GUTIERREZ PUMP STATION MUST BE OPERATIONAL PRIOR TO DEMOLITION OF EXISTING PUMP STATION. EXISTING STATION TO REMAIN COMPLETELY OPERABLE DURING CONSTRUCTION.
5. SEE GENERAL NOTES SHEET 1 FOR WATER VALVE – SHUT-OFF PLAN REQUIREMENTS.

LEGEND

STRUCTURE OR PAVEMENT TO REMOVE

UTILITY TO REMOVE

AS BUILT INFORMATION

CONTRACTOR NEC Construction Co.
STARTED BY Albuquerque DATE 2/91
COMPLETED BY Albuquerque DATE 2/91
INSPECTOR'S ACCEPTANCE BY LEGEND INC. DATE 12/91
FIELD VERIFICATION BY LEGEND INC. DATE 12/91
DRAWINGS CORRECTED BY LEGEND INC. DATE 2/92

MICRO-FILM INFORMATION

RECORDED BY DATE
NO.

BENCH MARKS

THE STATION IS AN ACS BRASS TABLET STAMPED "10-F22A" LOCATED ON THE NORTH CURB OF MONTGOMERY BLVD. NE AT THE INTERSECTION OF MONTGOMERY BLVD. AND SHENANDOAH PL. NE.
ELEVATION=5831.93 (FIRST ORDER)

SURVEY INFORMATION

FIELD NOTES

NO.	BY	DATE
1	ALBUQ. SURVEY	5/90

ENGINEER'S SEAL

E. WAYNE WELTY NEW MEXICO 6574 REGISTERED PROFESSIONAL ENGINEER

NO.	DATE	REMARKS	BY
1	2/92	Revised Note	

REVISIONS

DESIGN

DESIGNED BY E. LIVINGSTON DATE JUNE 1990
DRAWN BY LH DATE JUNE 1990
CHECKED BY K.W. WELTY DATE JUNE 1990

26 33 37.90 03 72

RECORD DRAWING
Date FEB 1992
Where drawings have been revised based on field data and every reasonable attempt has been made to depict conditions as actually performed

8026.21CD5 , 8026DEMO

CITY OF ALBUQUERQUE
PUBLIC WORKS DEPARTMENT
ENGINEERING GROUP

TITLE: GUTIERREZ PUMP STATION RECONSTRUCTION
INITAL AND FINAL DEMOLITION PLAN

APPROVALS	ENGINEER	DATE	APPROVALS	ENGINEER	DATE
DRC CHAIRMAN	[signature]	11/16/90	WATER	R.W. Kane	11-13-90
TRANSPORTATION	[signature]	11-16-90	WASTE WATER	R.W. Kane	11-13-90
HYDROLOGY	[signature]	11-15-90			

PROJECT NO.	MAP NO.	SHEET	OF
3337.90	F-22	3	15

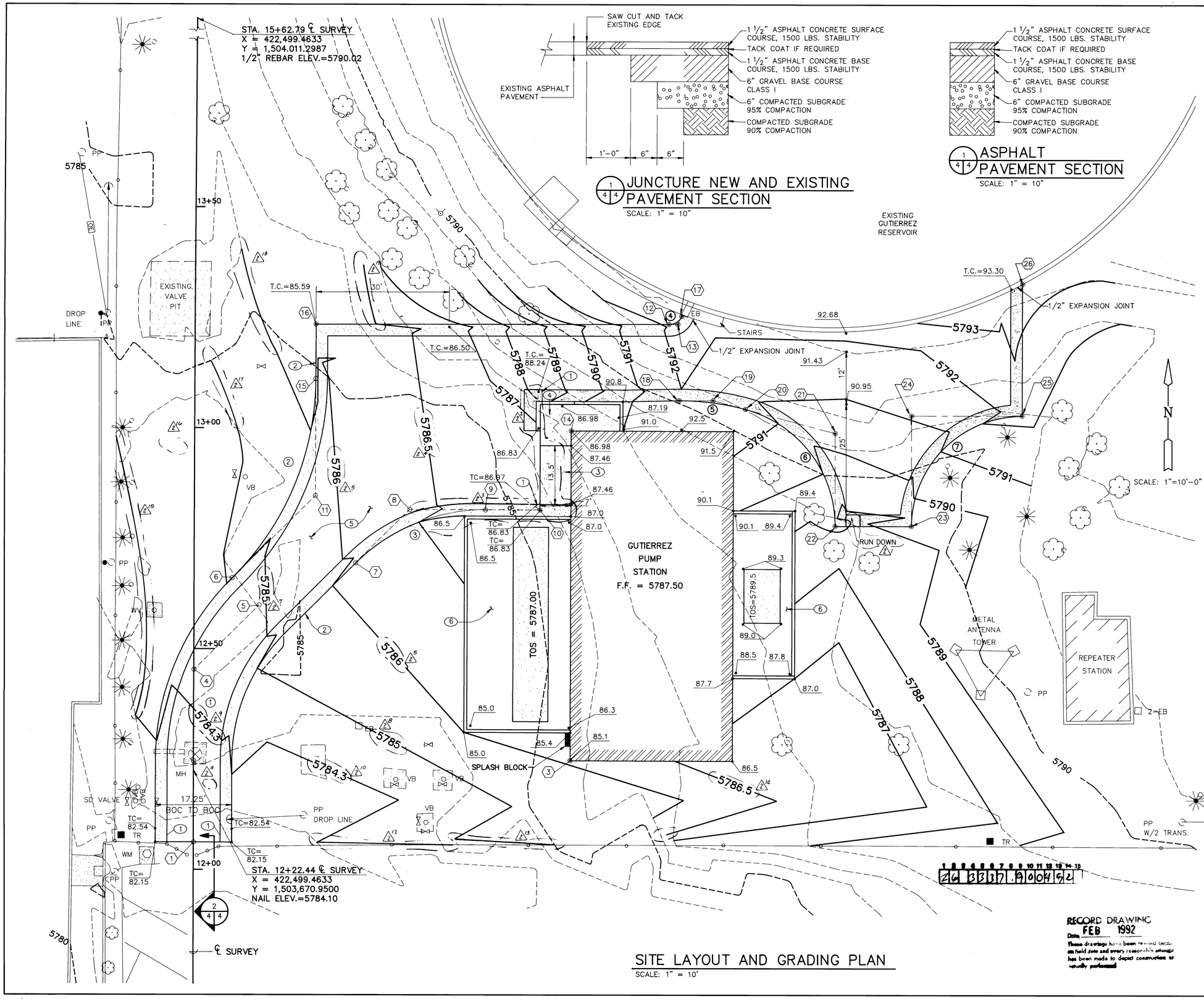

RECORD DRAWING
Date FEB 1992
These drawings have been revised based on field data and every reasonable attempt has been made to depict constructions as actually performed

NOTES:

1. IRRIGATION AND LANSCAPING REPLACEMENTS NOT SHOWN FOR CLARITY. SEE IRRIGATION AND LANDSCAPING SHEETS FOR DETAILS.

KEYED NOTES:

1. STA. 12+06.26, ℄ SVY.
2. PC STA. 12+24.62, ℄ SVY.
3. STA. 12+25.00, 85'RT. ℄ SVY.
4. PI STA. 12+45.38, ℄ SVY.
5. PT STA. 12+59.98, 14.64'RT. ℄ SVY.
6. PRC STA. 12+66.08, 8.54'RT. ℄ SVY.
7. PC STA. 12+69.59, 36.45'RT. ℄ SVY.
8. PI STA. 12+81.71, 48.57'RT. ℄ SVY.
9. PT STA. 12+81.71, 65.70'RT. ℄ SVY.
10. STA. 12+81.71, 78.00'RT. ℄ SVY.
11. PI STA. 12+84.78, 27.25'RT. ℄ SVY.
12. PT STA. 13+23.58, 107.00' RT. ℄ SVY.
13. PI STA. 13+23.58, 109.00' RT. ℄ SVY.
14. STA. 12+99.67, 85.00'RT. ℄ SVY.
15. PC STA. 13+11.22, 27.25'RT. ℄ SVY.
16. STA. 13+23.58, 27.25'RT. ℄ SVY.
17. PC STA. 13+25.39, 109.85' RT. ℄ SVY.
18. PC STA. 13+06.33, 109.39'RT. ℄ SVY.
19. PI STA. 13+06.33, 117.00'RT. ℄ SVY.
20. PCC STA. 13+04.36,124.35'RT. ℄ SVY.
21. PI STA. 12+98.93, 144.64'RT. ℄ SVY.
22. PT STA. 12+77.93, 144.64'RT. ℄ SVY.
23. PC STA. 12+77.93, 161.89'RT. ℄ SVY.
24. PI STA. 13+02.93, 161.89'RT. ℄ SVY.
25. PT STA. 13+02.93, 186.89'RT. ℄ SVY.
26. STA. 13+31±, 186.89'RT. ℄ SVY.

KEYED NOTES:

1. TRANSITION CURB HEIGHT FROM 3/4" TO 4" IN 3' OF LENGTH AT ENDS OF CURB
2. MOUNTABLE CURB ROLL TYPE PER STD. DWG. 2415
3. DRIVEPAD PER STD. DWG. 2425
4. SIDEWALK PER STD. DWG. 2430
5. PAVEMENT PER 1/4 4
6. FINISH GRADE IN GRAVEL AREAS IS TOP OF GRAVEL.

CURVE DATA – (ALL DATA AT BACK OF CURB UNLESS OTHERWISE NOTED)

○	△	R	L	T
1 ℄ ROAD	45°00'00"	50.00'	39.27'	20.71'
2	45°00'00"	63.84'	50.14'	26.44'
3	45°00'00"	41.38'	32.50'	17.14'
4	65°00'00"	3.14'	3.56'	2.00'
5	15°00'00"	57.81'	15.13'	7.61'
6	75°00'00"	27.37'	35.82'	21.00'
7	90°00'00"	25.00'	39.27'	25.00'

1 PC 2 3 4 5 PT

1/4 PT. ELEVATION – TOP OF CURB

○	1	2	3	4	5
1 WEST	5782.88	5783.17	5783.46	5783.74	5784.03
1 EAST	5783.16	5783.49	5783.81	5783.14	5784.46
2	5785.28	5784.97	5784.66	5784.34	5784.03
3	5785.35	5785.68	5786.00	5786.33	5786.65
4	5792.90	5292.79	5792.69	5792.58	5792.47
5	5792.28	5792.05	5791.83	5791.60	5791.37
6	5791.37	5790.83	5790.30	5789.76	5789.22
7	5789.70	5790.39	5791.08	5791.76	5792.45

8026.21CD5 / GUTSGRD

AS BUILT INFORMATION

CONTRACTOR MCC Construction Co.
STAKED BY SUPERVISOR COUNTS DATE 2/91
INSPECTOR'S CHANGES BY LEEDSMILL-WEBBENHORST DATE 12/91
FIELD VERIFICATION BY LEEDSMILL DATE 12/91
CORRECTED BY LEEDSMILL-WEBBENHORST INC DATE 2/92

MICRO-FILM INFORMATION

RECORDED BY DATE
NO.

BENCH MARKS

THE STATION IS AN ACS BRASS TABLET STAMPED "10-F22A" LOCATED ON THE NORTH CURB OF MONTGOMERY BLVD. NE AT THE INTERSECTION OF MONTGOMERY BLVD. AND SHENANDOAH PL. NE.
ELEVATION = 5831.93 (1ST.ORDER)

SURVEY INFORMATION

FIELD NOTES

NO.	BY	DATE
1	ALBQ. SURVEY	5/90

ENGINEER'S SEAL

NO.	DATE	REMARKS	BY
2	2/92	ADDED SIDEWALK & INV. ON BLDG. REVISED CONTOUR IN SIDE BLDG. ADDED RUN DOWN	
1	10/90	ADD'L PVMNT. NE OF BLDG., SPLASH BLKS.	

REVISIONS

DESIGN
DESIGNED BY K.BURT DATE JUNE 1990
DRAWN BY L-H, M.R.L. DATE JUNE 1990
CHECKED BY – DATE JUNE 1990

CITY OF ALBUQUERQUE
PUBLIC WORKS DEPARTMENT
ENGINEERING GROUP

TITLE:
GUTIERREZ PUMP STATION
SITE LAYOUT AND GRADING PLAN

APPROVALS	ENGINEER	DATE	APPROVALS	ENGINEER	DATE
DRC CHAIRMAN			WATER	R.W. Kane	11-13-90
TRANSPORTATION	R.Dank	11-16-90	WASTE WATER	R.W. Kane	11-13-90
HYDROLOGY	L.Dar	11-15-90			

PROJECT NO. 3337.90 | MAP NO. F-22 | SHEET 4 OF 15

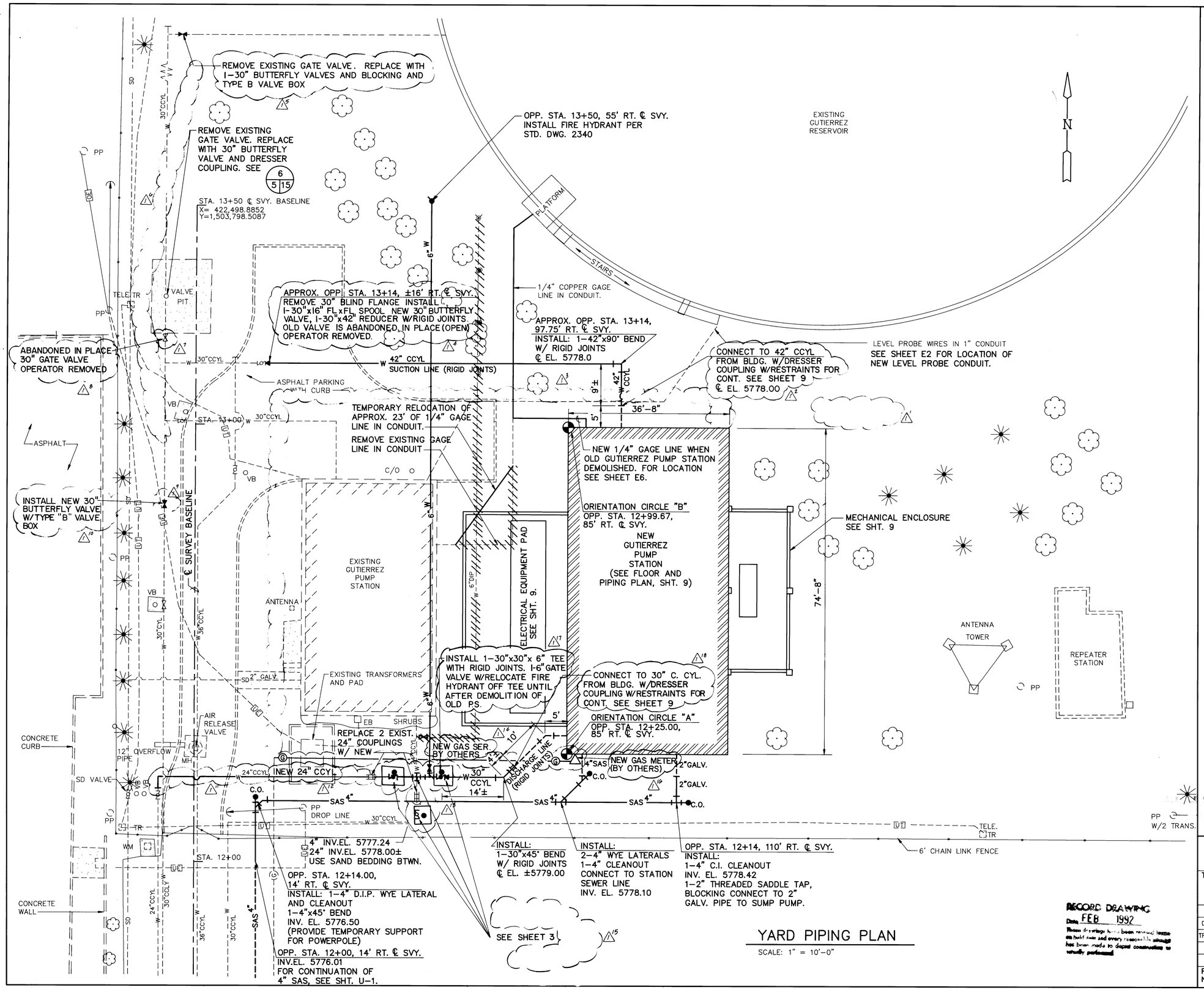

YARD PIPING PLAN

SCALE: 1" = 10'-0"

RECORD DRAWING
Date FEB 1992
Where drawings have been revised based on field data and every reasonable attempt has been made to depict construction as actually performed.

NOTES:

1. FOR LOCATIONS OF ELECTRICAL SERVICE AND TELEPHONE LINE RELOCATIONS, SEE SHEET E-1.
2. EXISTING UTILITY LOCATIONS AND ELEVATIONS SHOWN ARE APPROXIMATE. CONTRACTOR TO FIELD VERIFY PRIOR TO FABRICATION OF PIPING.
3. ALL NEW CONCRETE CYLINDER PIPING SHOWN SHALL HAVE FULL RIGID JOINTS PER C.O.A. STD. DWG. 2305.
4. LANDSCAPING IRRIGATION SYSTEM NOT SHOWN FOR CLARITY. SEE IRRIGATION AND LANDSCAPING SHEETS FOR DETAILS.
5. BUTTERFLY VALVE INSTALLATION PER CITY STD. DWG. 2351.
6. BLOCKING FOR NEW VALVES SHALL BE INSTALLED PER C.O.A. DWG. 2333.
7. VALVE BOXES SHALL BE INSTALLED PER C.O.A. STD. DWG. 2326.
8. EXISTING GUTIERREZ PUMP STATION TO REMAIN IN FULL OPERATION DURING CONSTRUCTION OF NEW PUMP STATION. TEMPORARY SHUT-DOWN OF EXISTING STATION ALLOWED FOR INSTALLATION OF NEW 24" VALVES.

AS BUILT INFORMATION
CONTRACTOR MCC Construction Co.
WORK STAKED BY Surveyors Electrical Albuquerque DATE 8/91
INSPECTED BY Electrical Albuquerque DATE 12/91
ACCEPTANCE BY Albuquerque DATE 12/91
FIELD VERIFICATION BY Leedsville-Hydrometric DATE 12/91
DRAWINGS CORRECTED BY Leedsville-Hydrometric DATE 2/92
MICRO-FILM INFORMATION
RECORDED BY DATE
NO.

BENCH MARKS
THE STATION IS AN ACS BRASS TABLET STAMPED "10-F22A" LOCATED ON THE NORTH CURB OF MONTGOMERY BLVD. NE AT THE INTERSECTION OF MONTGOMERY BLVD. AND SHENANDOAH PL. NE.
ELEVATION = 5831.93 (1ST. ORDER)

SURVEY INFORMATION
FIELD NOTES

NO.	BY	DATE
1	ALBQ. SURVEY	5/90

ENGINEER'S SEAL
R. W. WELTY NEW MEXICO REGISTERED PROFESSIONAL ENGINEER 7844

NO.	DATE	REMARKS	BY
1	2/92	Modifications to Notes and Gas Lines	

REVISIONS

DESIGN
DESIGNED BY E. LIVINGSTON DATE JUNE 1990
DRAWN BY K. H. KROHN DATE JUNE 1990
CHECKED BY K. W. WELTY DATE JUNE 1990

1 2 3 4 5 6 7 8 9 10 11 12 13 14 15
2 6 3 3 3 7 . 9 0 0 5 9 2

8026.21CD5 / 8026YPP.DWG

CITY OF ALBUQUERQUE
PUBLIC WORKS DEPARTMENT
ENGINEERING GROUP

TITLE:
GUTIERREZ PUMP STATION RECONSTRUCTION
YARD PIPING PLAN

APPROVALS	ENGINEER	DATE	APPROVALS	ENGINEER	DATE
DRC CHAIRMAN			WATER	R.W. Kane	11-13-90
TRANSPORTATION	N/ARHO	11-16-90	WASTE WATER	R.W. Kane	11-13-90
HYDROLOGY	LDM	11-15-90			

PROJECT NO.	MAP NO.	SHEET	OF
3337.90	F-22	5	15

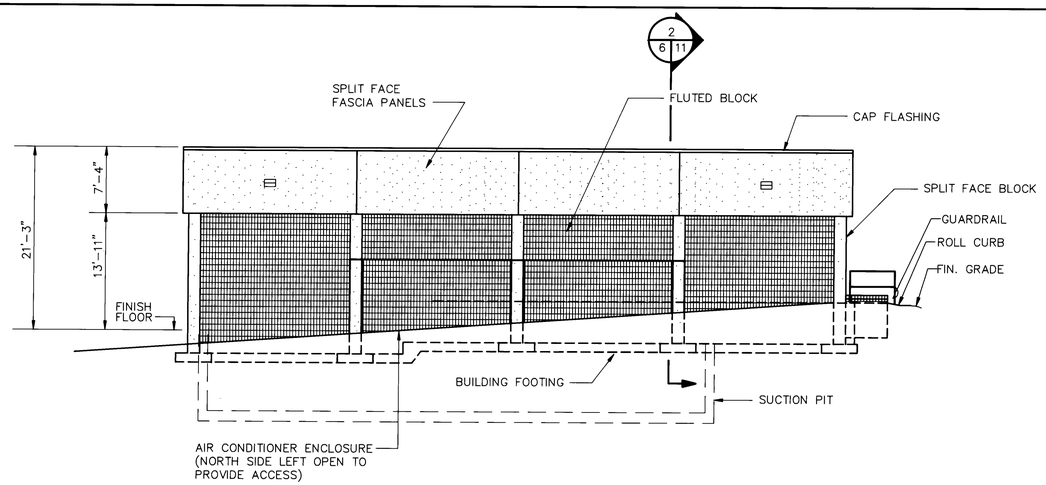

EAST ELEVATION

SCALE: 1/8" = 1'-0"

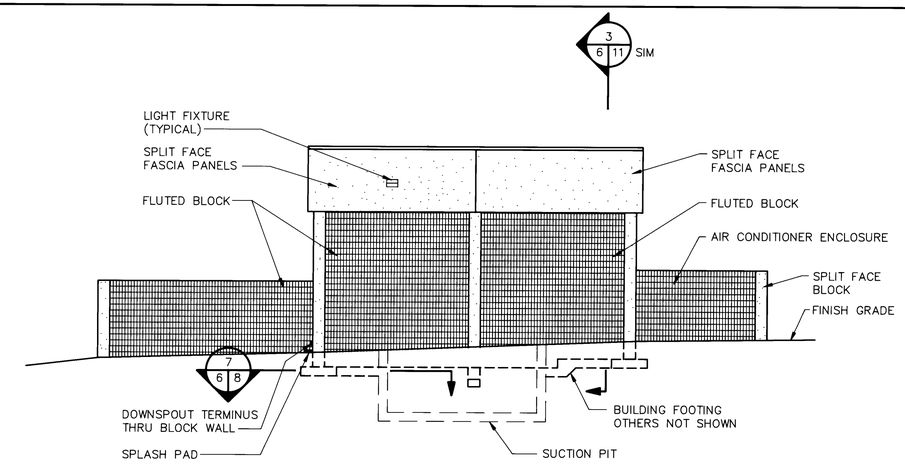

SOUTH ELEVATION

SCALE: 1/8" = 1'-0"

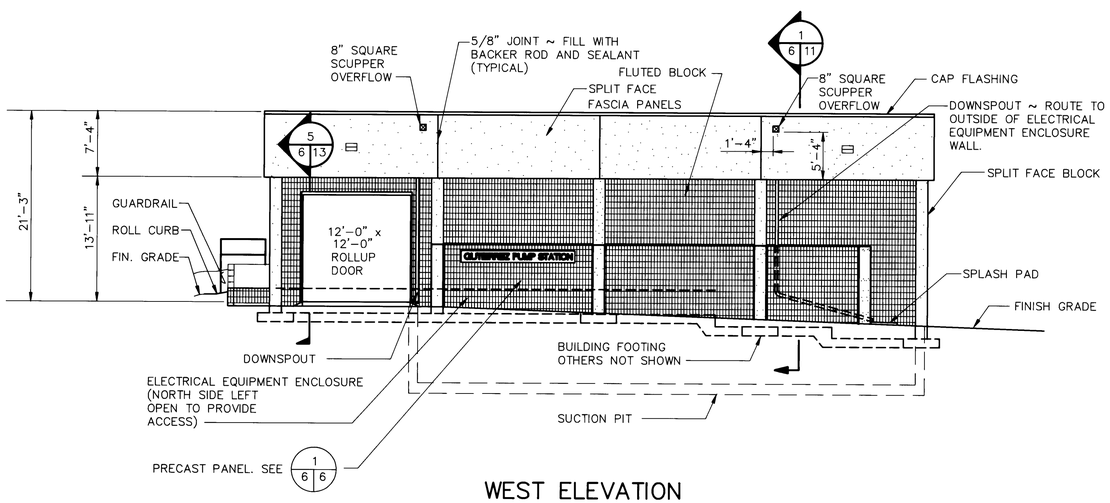

WEST ELEVATION

SCALE: 1/8" = 1'-0"

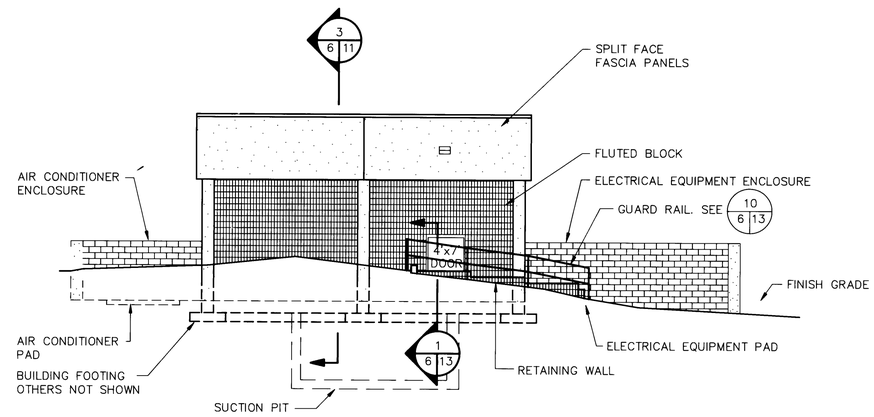

NORTH ELEVATION

SCALE: 1/8" = 1'-0"

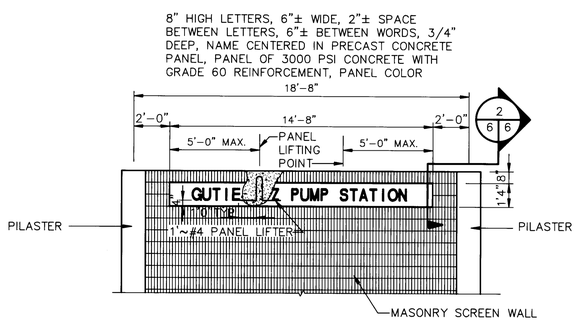

1/6 6 ELEVATION PRECAST PANEL

SCALE: 1/4" = 1'-0"

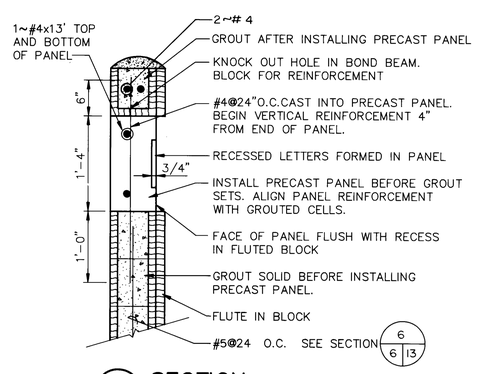

2/6 6 SECTION

SCALE: 1" = 1'-0"

NOTE: BLOCK COLOR SHALL BE COPPER COLOR AS MANUFACTURED BY CREGO BLOCK COMPANY, OR EQUAL.

2 6 3 3 3 7. 9 0 0 4 9 2

8026.21CD3 , 8026GBE

CITY OF ALBUQUERQUE
PUBLIC WORKS DEPARTMENT
ENGINEERING GROUP

TITLE: GUTIERREZ PUMP STATION RECONSTRUCTION
BUILDING ELEVATIONS

APPROVALS	ENGINEER	DATE	APPROVALS	ENGINEER	DATE
DRC CHAIRMAN	[illegible]	4/16/90	WATER	R.W. Kane	11-13-90
TRANSPORTATION	N/A RWO	11-16-90	WASTE WATER	R.W. Kane	11-13-90
HYDROLOGY	LDM	11-15-90			

PROJECT NO. 3337.90 | MAP NO. F-22 | SHEET 6 OF 15

AS BUILT DRAWING
FEB 1992
These drawings have been revised based on field data and every reasonable attempt has been made to depict construction as actually performed

SURVEY INFORMATION

FIELD NOTES

NO.	BY	DATE
1	ALBUQ. SURVEY	5/90

BENCH MARKS

THE STATION IS AN ACS BRASS TABLET STAMPED "10-F22A" LOCATED ON THE NORTH CURB OF MONTGOMERY BLVD. N.E. AT THE INTERSECTION OF MONTGOMERY BLVD. AND SHENANDOAH PL.
N.E. ELEVATION=5831.93 (1ST ORDER)

AS BUILT INFORMATION

CONTRACTOR MCC Construction Co.
WORK STAKED BY ALBUQUERQUE SURVEYING CO. DATE 2/91
INSPECTOR'S ACCEPTANCE BY LABORATORY LABORATORY DATE 12/91
FIELD VERIFICATION BY LABORATORY INC. DATE 11/91
COMPUTER CORRECTED BY LABORATORY INC. DATE 2/92

MICRO-FILM INFORMATION

RECORDED BY DATE
NO.

ENGINEER'S SEAL

NO.	DATE	REMARKS	BY
		REVISIONS	

DESIGNED BY E. LIVINGSTON DESIGN DATE JUNE 1990
DRAWN BY LH DATE JUNE 1990
CHECKED BY K.W. WELTY DATE JUNE 1990

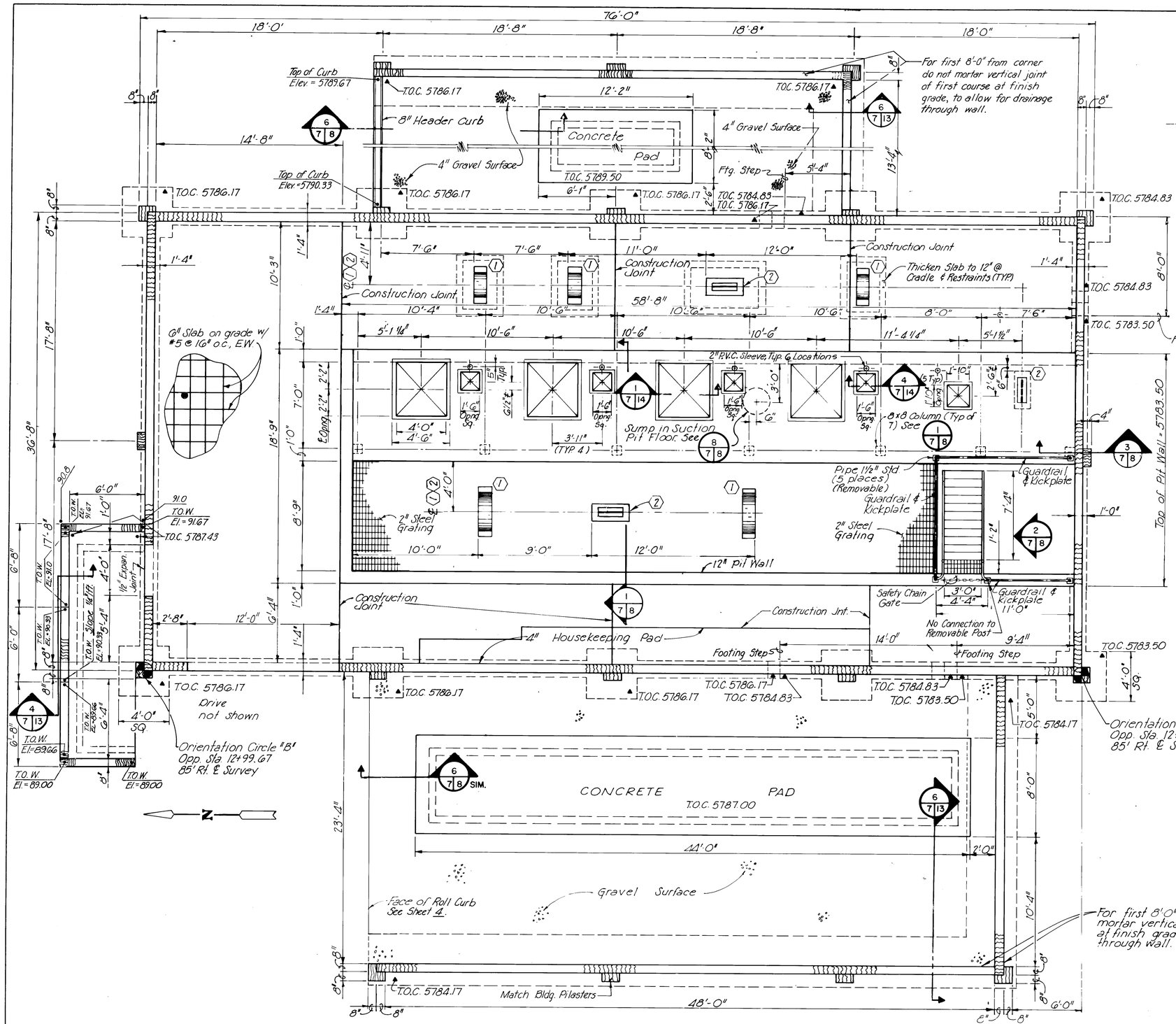

FOUNDATION PLAN

SCALE : 1/4" = 1'-0"

Station Finish Floor Elevation = 5787.50

Suction Pit Finish Floor Elev. = 5778.50

LEGEND

T.O.C.	Top of Concrete
(1)	Pipe Cradle See (1/7/15)
(2)	Longitudinal Restraints See (2/7/15)
	CMU
	Footing Outline See Sheets 11 & 13 for Details
	Floor Drain

NOTE

‡ dimensions to be coordinated with piping and equipment furnished

4" housekeeping pad to be 3" larger than equipment furnished

MASONRY SPECIAL INSPECTION NOTES:

A. Special inspection is required during preparation of masonry wall prisms, sampling and placing of all masonry units, placement of reinforcement, inspection of grout space, immediately prior to closing of clean outs, and during all grouting operations.

B. Some inspections may be made on a periodic basis and satisfy the requirements of continuous inspection, provided this periodic scheduled inspection is performed as approved by the building official.

GENERAL NOTES

A. Design Loads:

1. Gravity - Roof live = 20 psf
   Roof dead = 15 psf
   Conc Floor live = 950 lbs
   Unit Floor live = 100 psf
2. Seismic - 1988 UBC Zone 2B
3. Wind - Basic Wind Speed 75mph
   - I = 1.0
   - q_s = 15 psf

B. Allowable Soil Bearing - 2000 psf

FOUNDATION NOTES

A. Building footings and interior slab shall be founded on a minimum of 2 feet Engineered Fill. Suction Pit wall shall not require overexcavation.

B. Exterior miscellaneous slabs shall not require Engineered Fill.

CONCRETE NOTES

A. Min. 28 day compressive strength f'c = 3000 psi

B. Reinforcing shall conform to ASTM A615, A616, A617 grade 60. Stirrups and ties grade 40.

C. Reinforcing continuous around corners

D. Exposed concrete chamfer ¾".

E. Keyway: Depth 1½", Width - ⅓ of member.

F. Provide 1-#5 x 4'-0" at each corner all openings.

G. Floor slab shall be placed in a checkerboard fashion.

MASONRY NOTES

A. CMU shall be grade N-1 moisture control with f'm = 1500 psi.

B. Continue bond beam reinforcing around corners.

C. Provide 1-#5 @ jamb and head of all doors unless detailed otherwise

D. Mortar Type 'A' f'm = 2500 psi

E. Reinforcing shall conform to ASTM A615, A617, grade 40

F. Special Inspection Required, See "Masonry Special Inspection Notes," This Sheet

STEEL NOTES

A. All beams, angles and misc. shapes shall be ASTM A36.

B. All welds not shown AISC minimums.

C. All connection bolts shall be ¾"ø ASTM A325 except as noted.

D. Anchor bolts shall be ASTM A307.

LANDSCAPE GRAVEL

A. Steri lize soil prior to placing gravel

B. Gravel thickness 4" minimum.

AS BUILT INFORMATION
CONTRACTOR MCC Construction Co.
WORK STAKED BY Surveying Co. DATE 8/91
STAKE CHECKED BY Albuquerque DATE 12/91
ACCEPTANCE BY Hubbenmont Inc. DATE 12/91
FIELD VERIFICATION BY LEGEND DATE 12/91
DRAWINGS CORRECTED BY LEGEND DATE 2/92
CORRECTED BY Hubbenmont Inc. DATE 2/92
MICRO-FILM INFORMATION
RECORDED BY DATE
NO.

BENCH MARKS
AGC Brass Tablet stamped "10-F22A" at north curb Montgomery Blvd NE and Shenandoah Place NE - Elev. 5831.93 (1st order)

SURVEY INFORMATION

FIELD NOTES		
NO.	BY	DATE
1	Albuquerque Survey Inc.	5/90

ENGINEER'S SEAL

REVISIONS

NO.	DATE	REMARKS	BY

DESIGN		
DESIGNED BY	K.W. WELTY	DATE JUNE 1990
DRAWN BY	L-H, INC.	DATE JUNE 1990
CHECKED BY	K.W. WELTY	DATE JUNE 1990

CITY OF ALBUQUERQUE
PUBLIC WORKS DEPARTMENT
ENGINEERING GROUP

TITLE: GUTIERREZ PUMP STATION RECONSTRUCTION
FOUNDATION PLAN

APPROVALS	ENGINEER	DATE	APPROVALS	ENGINEER	DATE
DRC CHAIRMAN			WATER	K.W. Kane	11-13-90
TRANSPORTATION	N/A RHO	11-16-90	WASTE WATER	K.W. Kane	11-13-90
HYDROLOGY	LDM	11-15-90			

PROJECT NO. 3337 90 | MAP NO. F-22 | SHEET 7 OF 15

26 3337.90 07 02

RECORD DRAWING
FEB 1992
These drawings have been revised based on field data and every reasonable attempt has been made to depict constructions as actually performed

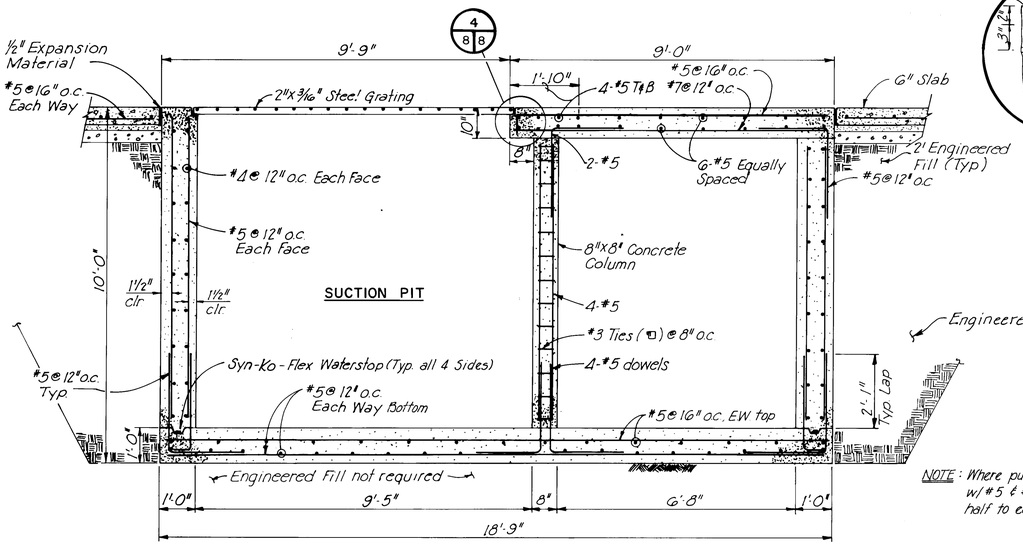

NOTE: Where pump opng. conflicts w/ #5 & #7 bar; place one-half to ea. side of opening.

1 / 7 8 SUCTION PIT TRANSVERSE SECTION
SCALE: 1/2" = 1'-0"

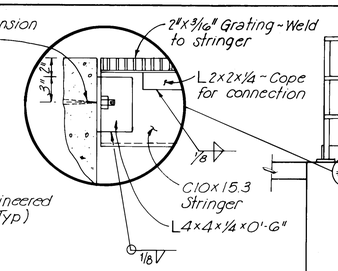

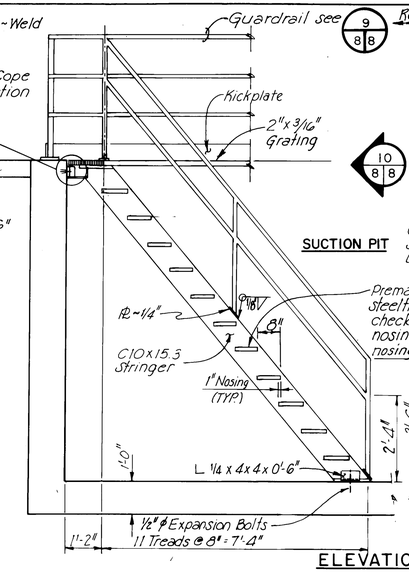

2 / 7 8 / 9 LADDER ELEVATION
SCALE: 1/2" = 1'-0"

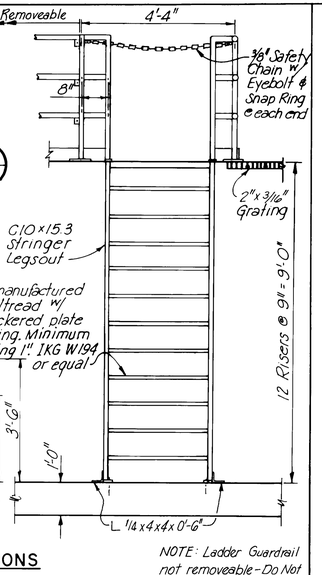

NOTE: Ladder Guardrail not removeable - Do Not Connect Returns to Removeable Posts.

10 / 8 8 ELEVATION
SCALE: 1/2" = 1'-0"

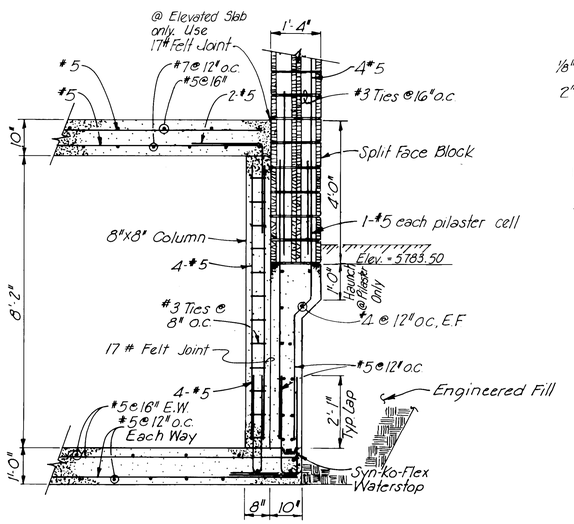

3 / 7 8 PIT WALL
SCALE: 1/2" = 1'-0"

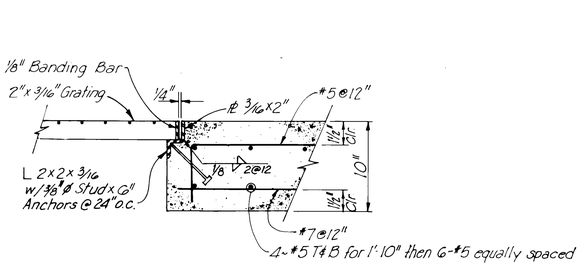

4 / 8 8 / 9 EDGE DETAIL
SCALE: 1 1/2" = 1'-0"

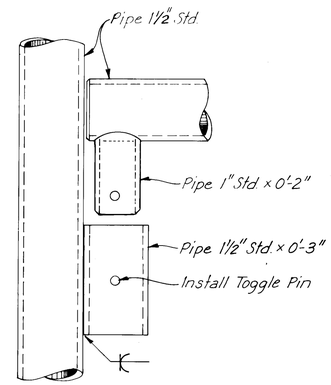

5 / 8 8 REMOVABLE GUARDRAIL CONNECTION
N.T.S.

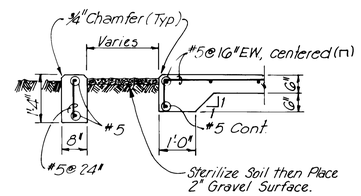

6 / 7 8 / 9 SECTION
SCALE: 1/2" = 1'-0"

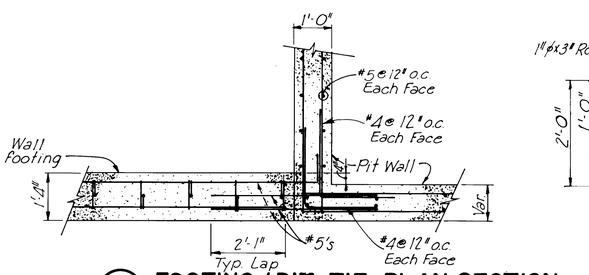

7 / 6 8 FOOTING / PIT TIE-PLAN SECTION
SCALE: 1/2" = 1'-0"

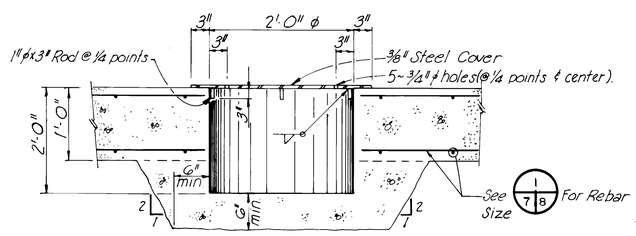

8 / 7 8 SUMP PIT DETAIL
NOT TO SCALE

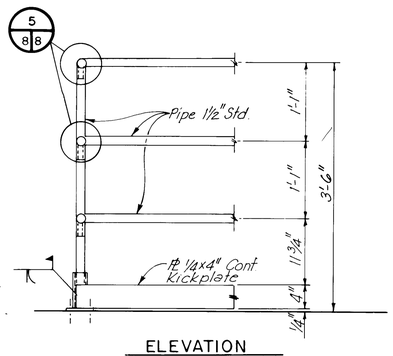

ELEVATION
1" = 1'-0"

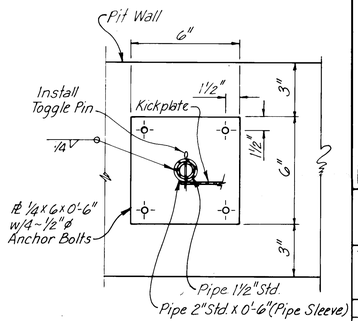

BASE PLATE
3" = 1'-0"

9 / 8 8 GUARDRAIL DETAILS
SCALE: AS SHOWN

AS BUILT INFORMATION
CONTRACTOR M.C.C. Construction Co.
WORK STAKED BY Albuquerque Engr. Inc. DATE 8/91
INSPECTORS Essential
ACCEPTANCE BY Hernandez Inc. DATE 12/91
FIELD VERIFICATION BY Hernandez Inc. DATE 12/91
CORRECTED BY Hernandez Inc. DATE 2/92
MICRO-FILM INFORMATION
RECORDED BY
DATE
NO

BENCH MARKS

SURVEY INFORMATION
FIELD NOTES

NO.	BY	DATE

ENGINEER'S SEAL

NO.	DATE	REMARKS	BY

REVISIONS

DESIGN
DESIGNED BY R. MATUNIS DATE JUNE 1990
DRAWN BY L-H, INC. DATE JUNE 1990
CHECKED BY K.W. WELTY DATE JUNE 1990

RECORD DRAWING
FEB 1995
These drawings have been revised based on field data and very reasonable as-built information. Revisions have been made to display conditions as actually performed.

CITY OF ALBUQUERQUE
PUBLIC WORKS DEPARTMENT
ENGINEERING GROUP

TITLE: GUTIERREZ PUMP STATION RECONSTRUCTION
FOUNDATION AND PIT DETAILS

APPROVALS	ENGINEER	DATE	APPROVALS	ENGINEER	DATE
DRC CHAIRMAN			WATER	R.W. Kane	11-13-90
TRANSPORTATION	N/A RWO	11-16-90	WASTE WATER	R.W. Kane	11-13-90
HYDROLOGY	LDM	11-15-90			

PROJECT NO. 3337.90 | MAP NO. F-22 | SHEET 8 OF 15

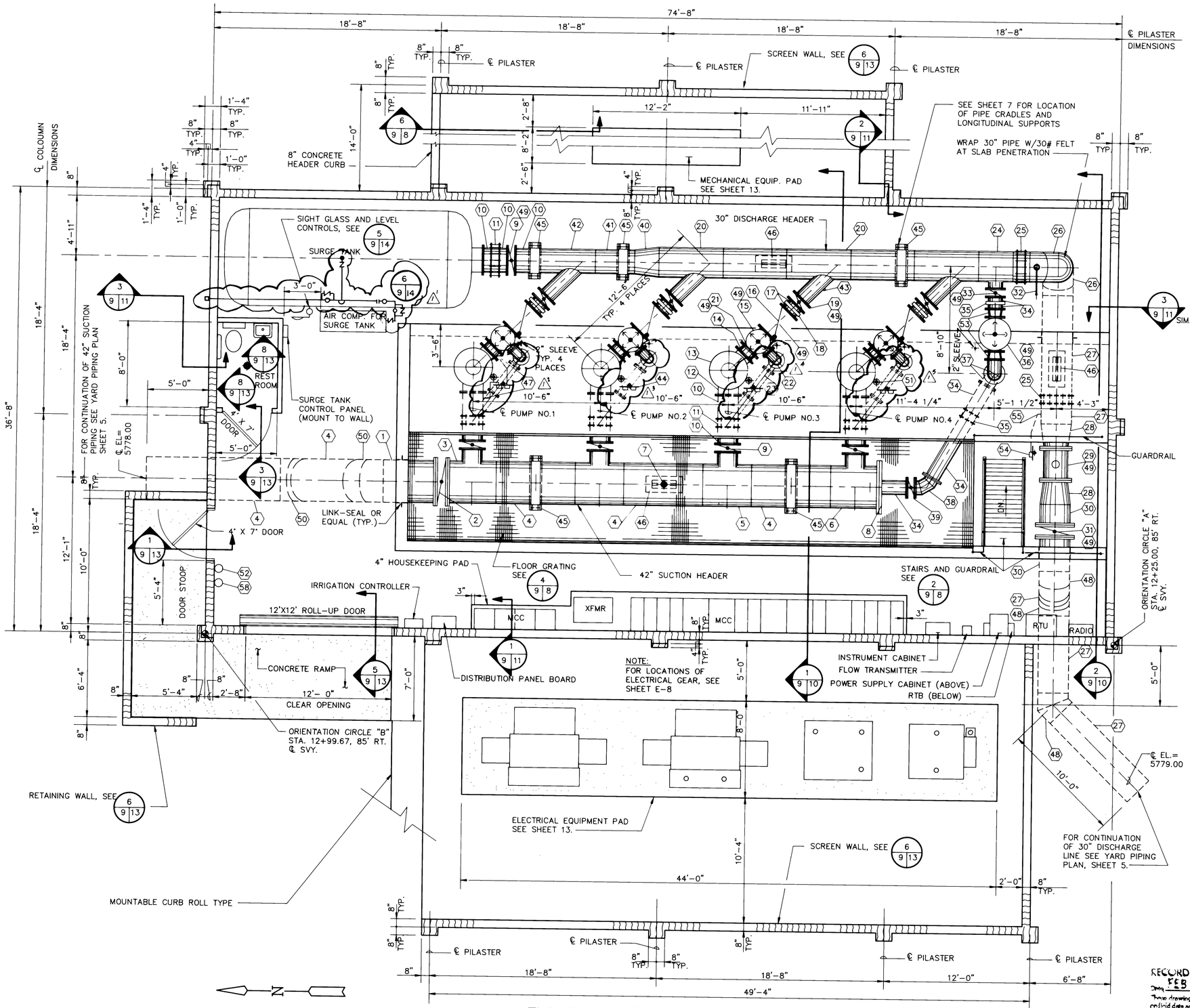

FLOOR AND PIPING PLAN

SCALE: 1/4" = 1'-0"

KEYED NOTES

1. 42" SPOOL (FL X PE)
2. 42" BUTTERFLY VALVE (FL X FL) MOTOR OPERATED
3. 42"X42"X24" TEE (FL X PE X FL)
4. 42" SPOOL (PE X PE) WITH RIGID JOINTS
5. * 42"X42"X24" TEE (PE X PE X FL)
6. 42"X42"X24" TEE (PE X FL X FL)
7. 1" COMBINATION AIR AND VACUUM VALVE, ISOLATION VALVE AND OUTLET PIPING. (VENT OUTLET OVER FLOOR)
8. 42" BLIND FLANGE
9. * 24" BUTTERFLY VALVE (FL X FL)
10. * 24" SPOOL (FL X PE)
11. * 24" RESTRAINED COUPLING
12. * SUCTION VESSEL AND PUMP BASE PLATE (SEE DETAIL SHEET 14.)
13. * PUMP, MOTOR AND DISCHARGE HEAD
14. * 16" SPOOL (FL X FL)
15. * 10" PUMP BY-PASS ANGLE VALVE (FL X FL) CONNECT PILOT PIPING TO TAP (43)
16. * 16" PUMP CHECK VALVE (FL X FL)
17. * 16" SPOOL (FL X PE)
18. * 16" RESTRAINED COUPLING
19. * 16" BUTTERFLY VALVE (FL X FL) MOTOR OPERATED
20. * 30"X30"X16" 45° WYE LATERAL (PE X PE X FL)
21. * 16"X16"X10" TEE (FL X FL X FL)
22. * 10"X90° BEND (FL X FL)
23. * 10" SPOOL (FL X FL)
24. 30"X30"X14" TEE (PE X PE X FL)
25. 30" RESTRAINED COUPLING
26. 30" 3 PIECE 90° BEND
27. 30" SPOOL (PE X PE)
28. 30"X24" REDUCER (PE X FL)
29. 24" MAG. METER (FL X FL)
30. 30" SPOOL (PE X FL)
31. 30" BUTTERFLY VALVE (FL X FL) MOTOR OPERATED
32. 2" COMBINATION AIR AND VACUUM VALVE, ISOLATION VALVE AND OUTLET PIPING (VENT OUTLET F.D.)
33. 14" BUTTERFLY VALVE (FL X FL) MOTOR OPERATED
34. 14" SPOOL (FL X PE)
35. 14" RESTRAINED COUPLING
36. 12" ZONE TRANSFER VALVE (GLOBE)
37. 14"X90° BEND (FL X FL)
38. 14" 3 PIECE 60° BEND (FL X FL)
39. 14" BUTTERFLY VALVE (FL X FL)
40. 24"X30" REDUCER (PE X PE)
41. 24" SPOOL (PE X PE)
42. 24"X24"X16" 45° WYE LATERAL (PE X PE X FL)
43. * 1/4" NPT COUPLING, TAP AND BALL VALVE FOR BY-PASS VALVE SUPPLY.
44. * SUCTION AND DISCHARGE PRESSURE GAGE STAND
45. PIPE CRADLE AND STRAP (SEE DETAIL SHEET 15).
46. LONGITUDINAL PIPE RESTRAINT (SEE DETAIL SHEET 15).
47. * 1/4" NPT COUPLING, SUCTION AND DISCHARGE PRESSURE GAGE TAP AND BALL VALVE.
48. 30" X 45° BEND (PE X PE) WITH RIGID JOINTS.
49. * ADJUSTABLE VALVE SUPPORT (TYPICAL ALL VALVES INDICATED)
50. 42" X 45° BEND (PE X PE) WITH RIGID JOINTS.
51. * 1/2" AIR RELEASE VALVE, ISOLATION VALVE AND OUTLET PIPING ON PUMP CAN. (VENT OUTLET OVER FLOOR))
52. FIRE EXTINGUISHER
53. 14" X 12" REDUCER (FL X FL)
54. "STATION DISCHARGE" GAGE STAND (SIMILAR DETAIL SHEET 14 , FOR ONE GAGE) AND PIPING TO 3/4" NPT COUPLING, TAP AND 1/4" BALL VALVE ON DISCHARGE LINE.
55. 3/4" NPT COUPLING, TAP AND BALL VALVE ON DISCHARGE LINE WITH 3/4"x3/4"x1/4" TEE AND 3/4" HOSE BIBB. CONNECT 1/4" BALL VALVE AND STATION DISCHARGE PRESSURE GAGE LINE.
56. 10" RESTRAINED COUPLING
57. 10" SPOOL (FL X PE)
58. LEVEL TRANSDUCER

KEYED NOTES

1. * DENOTES FITTINGS OR ITEMS TYPICAL TO PUMPS 1 TO 4 UNLESS OTHERWISE NOTED.
2. FOR STATION GAS PIPING, DOMESTIC WATER SUPPLY AND SANITARY SEWER PIPING, SEE SHEET M-1.
3. COUPLINGS (11), (25), (35) AND (56) SHALL BE RESTRAINED IN ACCORDANCE WITH C.O.A. STD. DETAIL 2351. ALL OTHER COUPLINGS SHALL BE RESTRAINED IN ACCORDANCE WITH MANUFACTURES' RECOMMENDATIONS.
4. SEE FOUNDATION PLAN SHEET 7 FOR LOCATIONS OF PIPING PENETRATIONS THROUGH SUSPENDED FLOOR SLAB.
5. REFER TO PIPING SECTIONS SHEET 10 FOR OTHER KEYED NOTES NOT SHOWN.

8026.21CD2 / 8026GPIP

RECORD DRAWING
FEB 1992
These drawings have been revised based on field data and every reasonable attempt has been made to depict construction as-built, preferred

AS BUILT INFORMATION
CONTRACTOR MCC Construction Co.
WORK STAKED BY Albuquerque Surveyors Inc. DATE 2/91
INSPECTORS ACCEPTANCE BY Kleinwalks, Inc DATE 12/91
FIELD VERIFICATION BY Kleinwalks, Inc DATE 12/91
DRAWINGS CORRECTED BY Kleinwalks, Inc DATE 2/92
MICRO-FILM INFORMATION
RECORDED BY DATE
NO.

BENCH MARKS
THE STATION IS AN ACS BRASS TABLET STAMPED "10-F22A" LOCATED ON THE NORTH CURB OF MONTGOMERY BLVD. N.E. AT THE INTERSECTION OF MONTGOMERY BLVD. AND SHENANDOAH PL. N.E. ELEVATION=5831.93 (1ST ORDER)

SURVEY INFORMATION
FIELD NOTES

NO.	BY	DATE
1	ALBUQ. SURVEY	5/90

ENGINEER'S SEAL
PAUL WAYNE RELLY, NEW MEXICO, 6519, PROFESSIONAL ENGINEER
10-22-90

REMARKS
REVISIONS

NO.	DATE	BY
5	2/92	Added Air System & Revised 10" Spool Loc.

DESIGN
DESIGNED BY E. LIVINGSTON DATE JUNE, 1990
DRAWN BY M. CHAVEZ DATE JUNE, 1990
CHECKED BY K.W. WELTY DATE JUNE, 1990

CITY OF ALBUQUERQUE
PUBLIC WORKS DEPARTMENT
ENGINEERING GROUP

TITLE: GUTIERREZ PUMP STATION RECONSTRUCTION
FLOOR AND PIPING PLAN

APPROVALS	ENGINEER	DATE	APPROVALS	ENGINEER	DATE
DRC CHAIRMAN	Roger Nelson	11/15/90	WATER	R.W. Kane	11-13-90
TRANSPORTATION	N.A. Rao	11-16-90	WASTE WATER	K.W. Kane	11-13-90
HYDROLOGY	CDM	11-15-90			

PROJECT NO. 3337.90 | MAP NO. F-22 | SHEET 9 OF 15

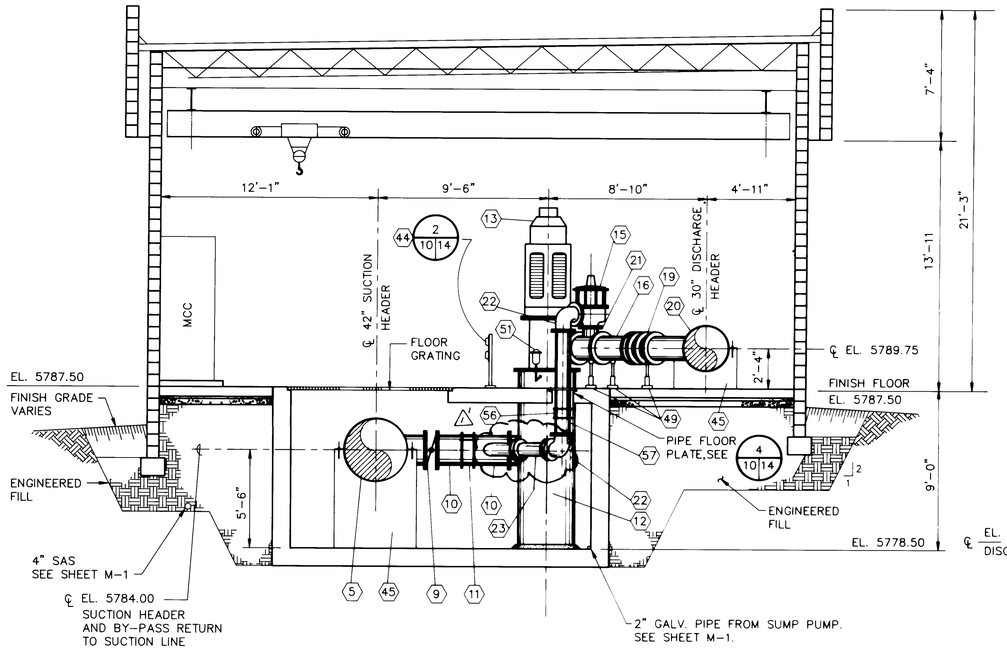

1 | 9 10 SECTION

SCALE: 1/4"= 1'-0"

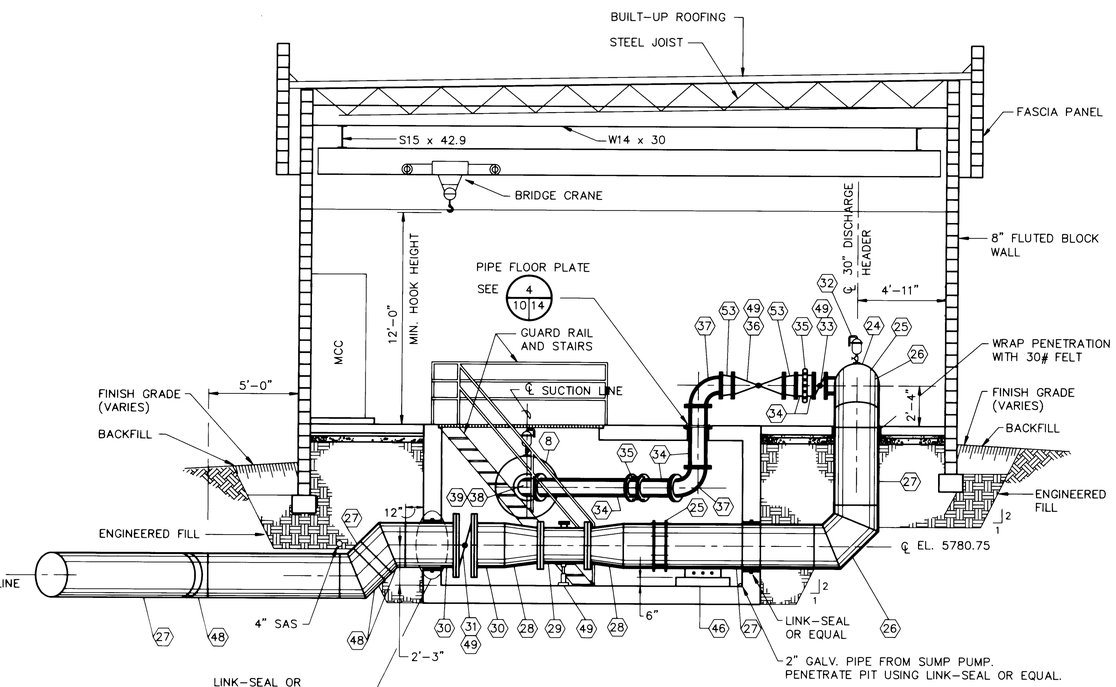

2 | 9 10 SECTION

SCALE: 1/4"= 1'-0"

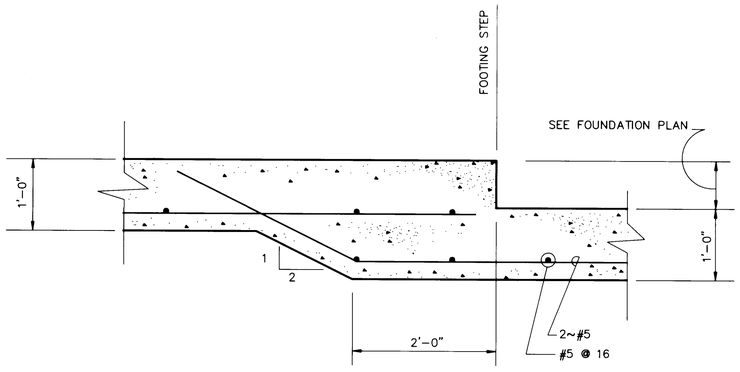

3 | 7 10 FOOTING STEP DETAIL

SCALE: 1"=1'-0"

LEGEND:

⟨26⟩ = KEY NOTE, SEE FLOOR AND PIPING PLAN SHEET.

NOTES:

1. REFER TO FLOOR AND PIPING PLAN SHEET 9 FOR OTHER KEYED NOTES NOT SHOWN.

8026.21CD2 , 8026GSEC

RECORD DRAWING
Date FEB 1992
These drawings have been revised based on final data and every reasonable attempt has been made to depict construction as actually performed

AS BUILT INFORMATION

CONTRACTOR MCC Construction Co.
WORK STAKED BY SUBCONTRACT CO. INC. DATE 2/91
INSPECTOR'S ACCEPTANCE BY LEGASPINI-MORGANTINI, INC. DATE 12/91
FIELD VERIFICATION BY LEGASPINI-MORGANTINI, INC. DATE 12/91
DRAWINGS CORRECTED BY WEBER-HOPE, INC. DATE 2/92

MICRO-FILM INFORMATION

RECORDED BY DATE
NO.

BENCH MARKS

THE STATION IS AN ACS BRASS TABLET STAMPED "10-F22A" LOCATED ON THE NORTH CURB OF MONTGOMERY BLVD. N.E. AT THE INTERSECTION OF MONTGOMERY BLVD. AND SHENANDOAH PL.
N.E. ELEVATION=5831.93 (1ST ORDER)

SURVEY INFORMATION

FIELD NOTES

NO.	BY	DATE
1	ALBUQ. SURVEY	5/90

ENGINEER'S SEAL

NO.	DATE	REMARKS	BY
1	2/92	Revised 10" Spool Location	

REVISIONS

DESIGN

DESIGNED BY	E. LIVINGSTON	DATE JUNE 1990
DRAWN BY	M. CHAVEZ	DATE JUNE 1990
CHECKED BY	K.W. WELTY	DATE JUNE 1990

CITY OF ALBUQUERQUE
PUBLIC WORKS DEPARTMENT
ENGINEERING GROUP

TITLE: GUTIERREZ PUMP STATION RECONSTRUCTION
PIPING SECTIONS

APPROVALS	ENGINEER	DATE	APPROVALS	ENGINEER	DATE
DRC CHAIRMAN	[signature]	11-16-90	WATER	R.W. Kane	11-13-90
TRANSPORTATION	N/A [signature]	11-16-90	WASTE WATER	R.W. Kane	11-13-90
HYDROLOGY	L Dac	11-15-90			

PROJECT NO. 3337.90 | MAP NO. F-22 | SHEET 10 OF 15

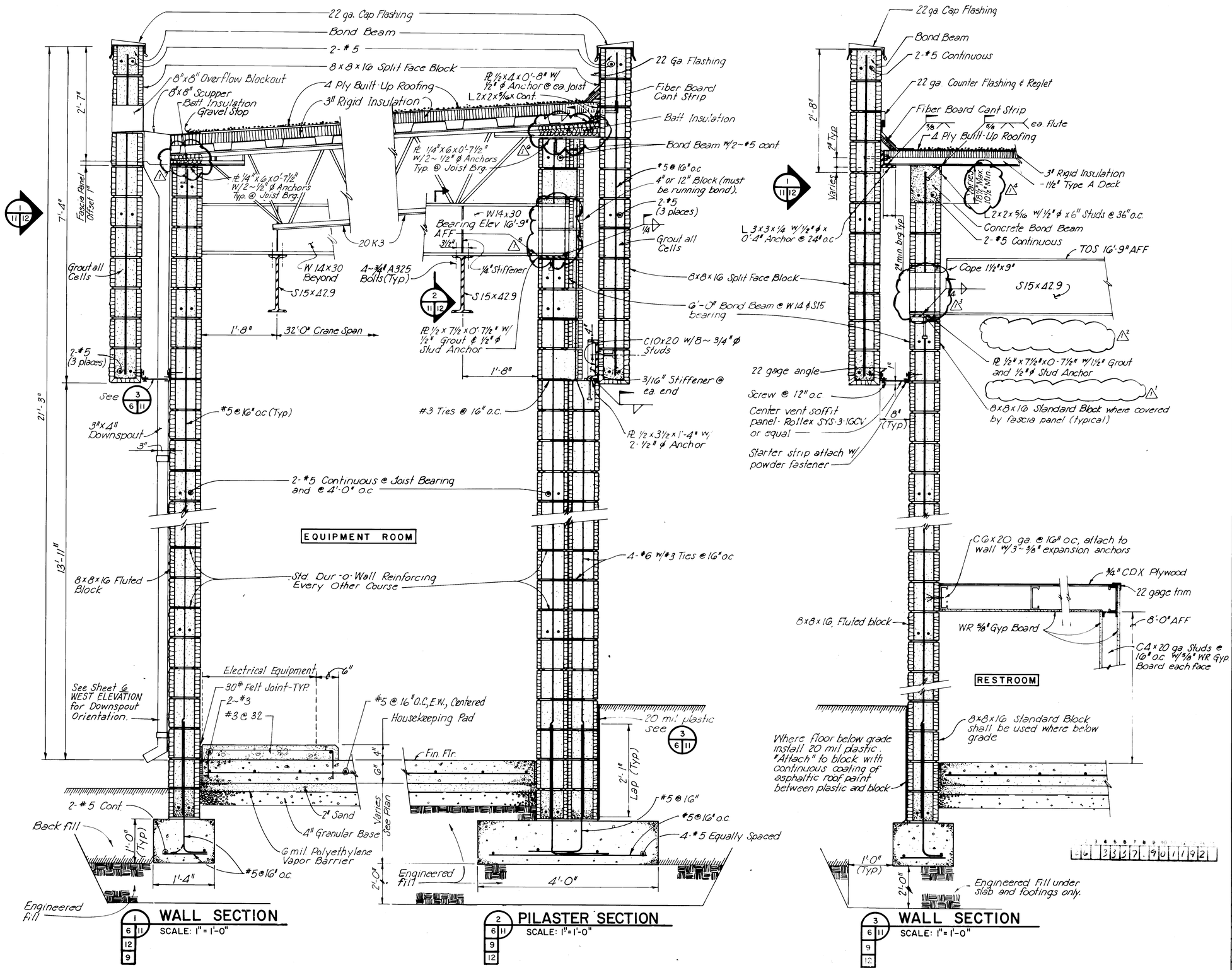
22 ga. Cap Flashing
Bond Beam
2-#5
8x8x16 Split Face Block
8"x8" Overflow Blockout
8"x8" Scupper
Batt Insulation
Gravel Stop
4 Ply Built-Up Roofing
3" Rigid Insulation
PL 1/2x4x0'-8" w/ 1/2" ø Anchor @ ea. Joist
L 2x2x5/16 x Cont.
22 Ga Flashing
Fiber Board Cant Strip
Batt Insulation
Bond Beam w/2-#5 cont.
PL 1/4"x6x0'-7 1/2" w/2~1/2" ø Anchors Typ. @ Joist Brg.
#5 @ 16" o.c
4" or 12" Block (must be running bond).
2-#5 (3 places)
W14x30 Bearing Elev 16'-9" AFF
Grout all Cells
20 K3
W 14x30 Beyond
4~3/4" A325 Bolts (Typ)
1/4" Stiffener
S15x42.9
8x8x16 Split Face Block
6'-0" Bond Beam @ W14 & S15 bearing
PL 1/2 x 7 1/2 x 0'-7 1/2" w/ 1/2" Grout & 1/2" ø Stud Anchor
C10x20 w/8~3/4" ø Studs
3/16" Stiffener @ ea. end
#3 Ties @ 16" o.c.
PL 1/2 x 3 1/2 x 1'-4" w/ 2-1/2" ø Anchor
Grout all Cells
2-#5 (3 places)
See 3/6 11
3"x4" Downspout
#5 @ 16" oc (Typ)
1'-8"
32'-0" Crane Span
2-#5 Continuous @ Joist Bearing and @ 4'-0" o.c
EQUIPMENT ROOM
8x8x16 Fluted Block
Std. Dur-o-Wall Reinforcing Every Other Course
4-#6 w/#3 Ties @ 16" oc
Electrical Equipment
30# Felt Joint-TYP.
2~#3
#3 @ 32
#5 @ 16" O.C, E.W., Centered
Housekeeping Pad
20 mil. plastic see 3/6 11
See Sheet 6 WEST ELEVATION for Downspout Orientation.
Fin. Flr.
2-#5 Cont.
Back fill
2" Sand
4" Granular Base
6 mil Polyethylene Vapor Barrier
#5 @ 16" o.c.
#5 @ 16"
#5 @ 16" o.c
4-#5 Equally Spaced
Engineered fill
Lap (Typ)
Varies See Plan
1'-4"
4'-0"
Engineered fill
22 ga. Cap Flashing
Bond Beam
2-#5 Continuous
22 ga. Counter Flashing & Reglet
Fiber Board Cant Strip
ea. flute
4 Ply Built-Up Roofing
3" Rigid Insulation
1 1/2" Type A Deck
2x2x5/16 w/1/2" ø x 6" Studs @ 36" o.c.
Concrete Bond Beam
2-#5 Continuous
TOS 16'-9" AFF
Cope 1 1/2"x9"
S15x42.9
L 3x3x1/4 w/1/2" ø x 0'-4" Anchor @ 24" o.c
PL 1/2" x 7 1/2" x 0'-7 1/2" w/1/2" Grout and 1/2" ø Stud Anchor
8x8x16 Standard Block where covered by fascia panel (typical)
22 gage angle
Screw @ 12" o.c
Center vent soffit panel - Rollex SYS-3-16CV or equal
Starter strip attach w/ powder fastener
C.G. x 20 ga @ 16" oc, attach to wall w/3~3/8" expansion anchors
3/4" CDX Plywood
22 gage trim
8'-0" AFF
8x8x16 Fluted block
WR 5/8" Gyp Board
C.G. x 20 ga Studs @ 16" o.c w/5/8" WR Gyp Board each face
RESTROOM
8x8x16 Standard Block shall be used where below grade
Where floor below grade install 20 mil plastic. "Attach" to block with continuous coating of asphaltic roof paint between plastic and block
Engineered Fill under slab and footings only.
1'-0" (Typ)
2'-0"
21'-3"
13'-11"
7'-4"
2'-7"
Fascia Panel Offset 1"
2'-8"
2" Typ
Varies
21" min. bng Typ
8" (Typ)
1/4
1/2
1/4
1/2
1/4
1/2

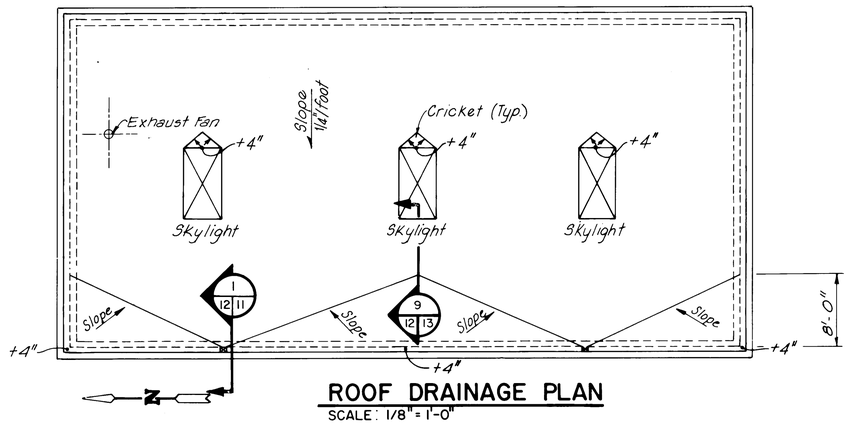

ROOF DRAINAGE PLAN
SCALE: 1/8" = 1'-0"

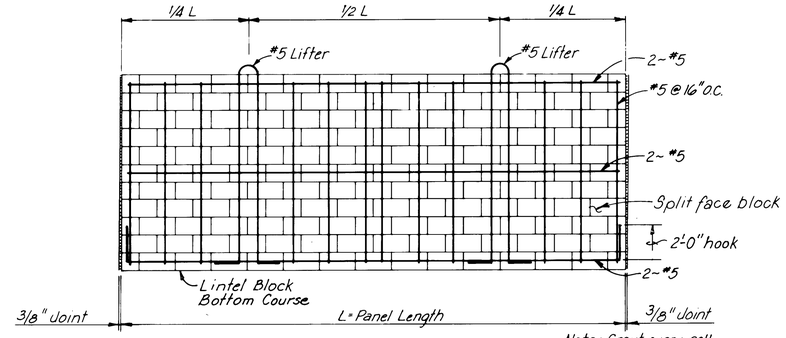

PANEL REINFORCEMENT
NTS

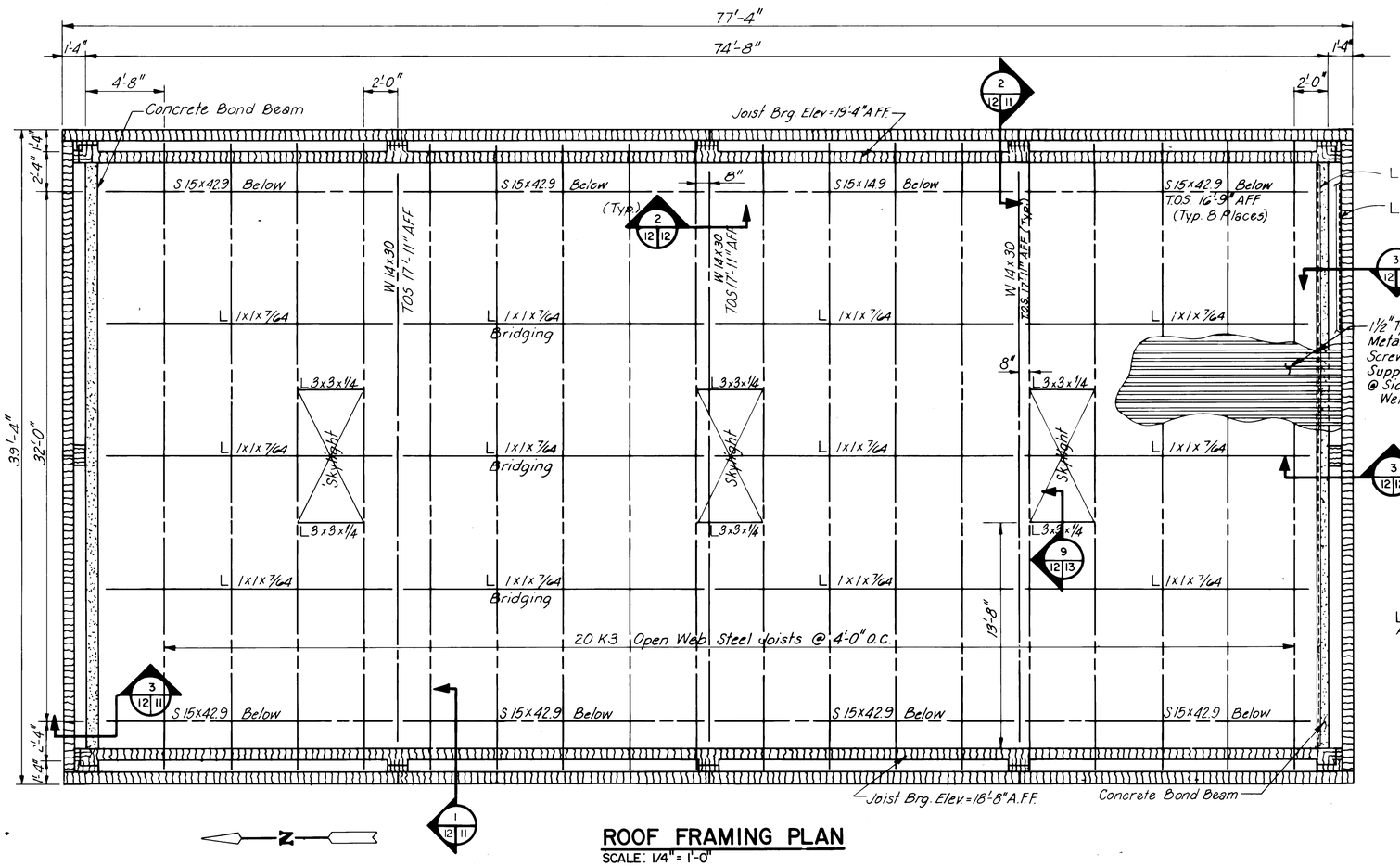

ROOF FRAMING PLAN
SCALE: 1/4" = 1'-0"

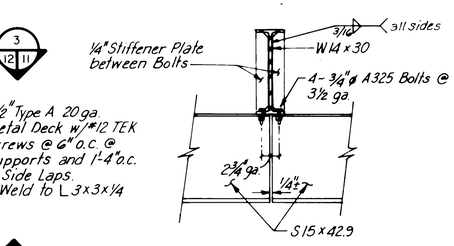

BRIDGE CRANE RUNWAY BEAM CONNECTION
SCALE: 1" = 1'-0"

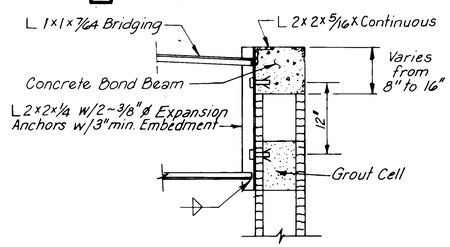

BRIDGING CONNECTION TO WALL
SCALE: 1" = 1'-0"

RECORD DRAWING
FEB 1992
These drawings have been revised based on field data and every reasonable attempt has been made to depict construction as actually performed.

AS BUILT INFORMATION	
CONTRACTOR: MRC Construction Co.	
WORK STAKED BY: ALBUQUERQUE	DATE 2/91
INSPECTORS: LEEDS/HILL	
AS-CONSTRUCTED BY: KEENEWICK, INC.	DATE 12/91
FIELD VERIFICATION BY: LEEDS/HILL	
DRAWINGS CORRECTED BY: KEENEWICK, INC.	DATE 12/91
CORRECTED BY: KEENEWICK, INC.	DATE 2/92
MICRO-FILM INFORMATION	
RECORDED BY	DATE
NO.	

BENCH MARKS

SURVEY INFORMATION		
FIELD NOTES		
NO.	BY	DATE

ENGINEER'S SEAL

NO.	DATE	REMARKS	BY
REVISIONS			

DESIGN

DESIGNED BY	L. DINE	DATE JUNE 1990
DRAWN BY	L-H, INC.	DATE JUNE 1990
CHECKED BY	K.W. WELTY	DATE JUNE 1990

1 2 3 4 5 6 7 8 9 10 11 12 13 14 15
2 6 3 3 2 7 4 9 0 1 2 7 2

CITY OF ALBUQUERQUE
PUBLIC WORKS DEPARTMENT
ENGINEERING GROUP

TITLE: GUTIERREZ PUMP STATION RECONSTRUCTION
ROOF FRAMING AND DRAINAGE PLAN

APPROVALS	ENGINEER	DATE	APPROVALS	ENGINEER	DATE
D.R.C. Chair	[illegible]	[illegible]			
Trans Dev	N/A RHO	11-16-90			
Utility Dev	R.W. Kane	11-13-90			
Hyd	LHM	11-15-90			

PROJECT NO.	MAP NO.	SHEET	OF
3337.90	F-22	12	15

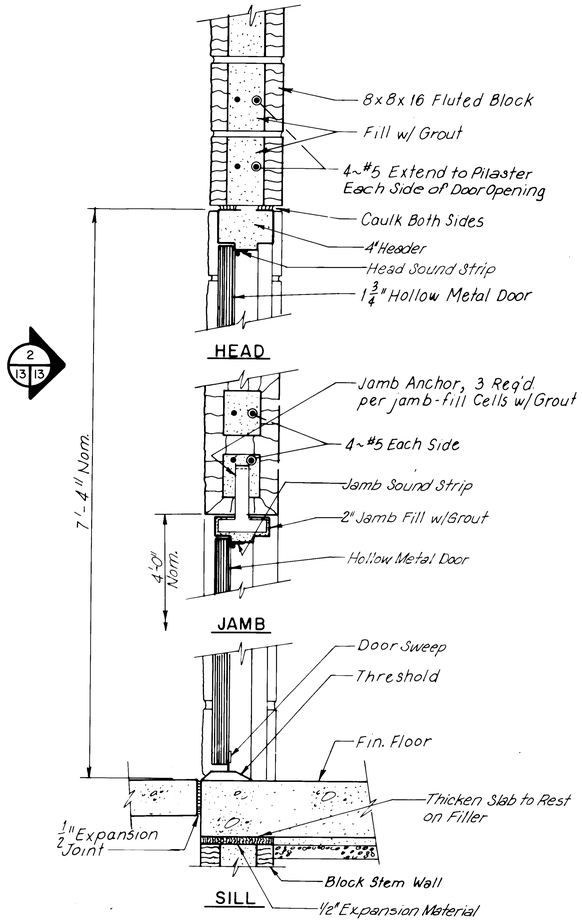

1 / 6 13 / 9 EXTERIOR DOOR SECTION
N.T.S.

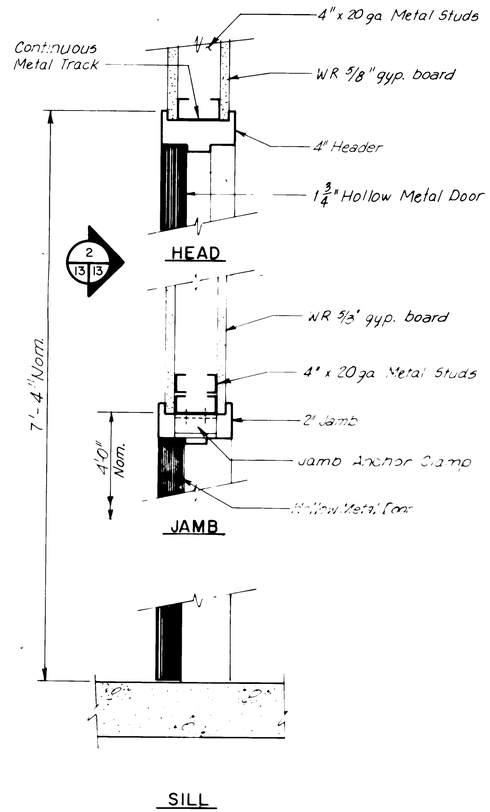

2 / 13 13 3 / 9 13 RESTROOM DOOR SECTION
N.T.S.

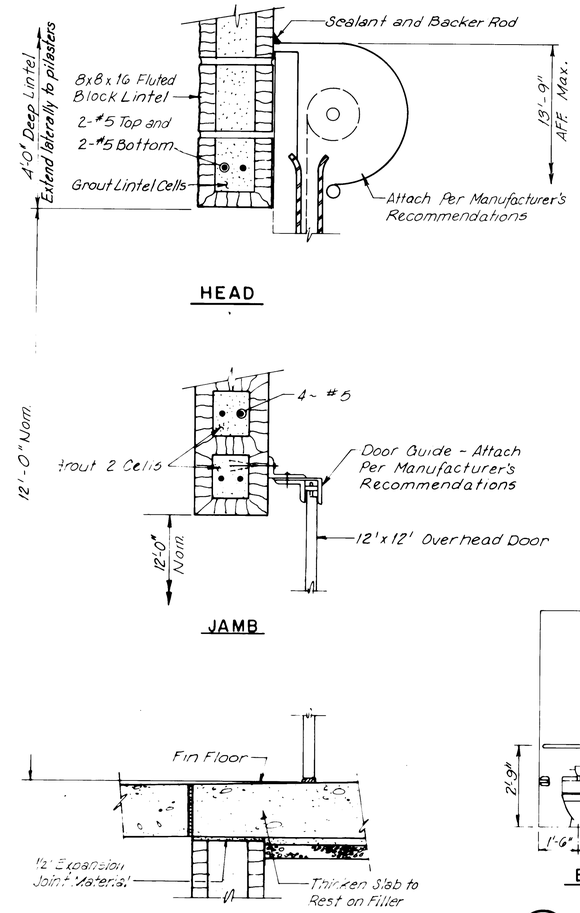

5 / 6 13 / 9 OVERHEAD DOOR SECTION
N.T.S.

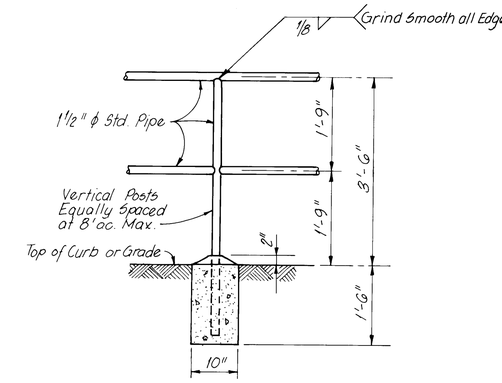

10 / 6 13 GUARDRAIL ELEVATION
SCALE: 3/4" = 1'-0"

7 / 13 13 DOOR HASP DETAIL (DELETED)

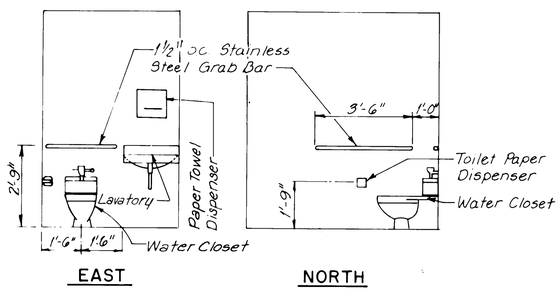

8 / 9 13 RESTROOM ELEVATIONS
N.T.S.

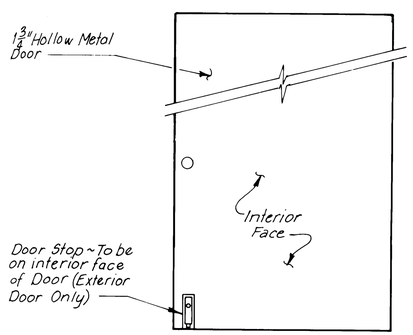

2 / 13 13 EXTERIOR DOOR ELEVATION
N.T.S.

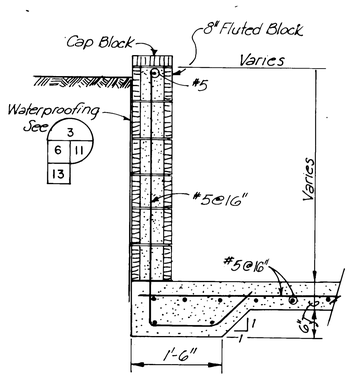

4 / 7 13 ENTRY WALL
N.T.S.

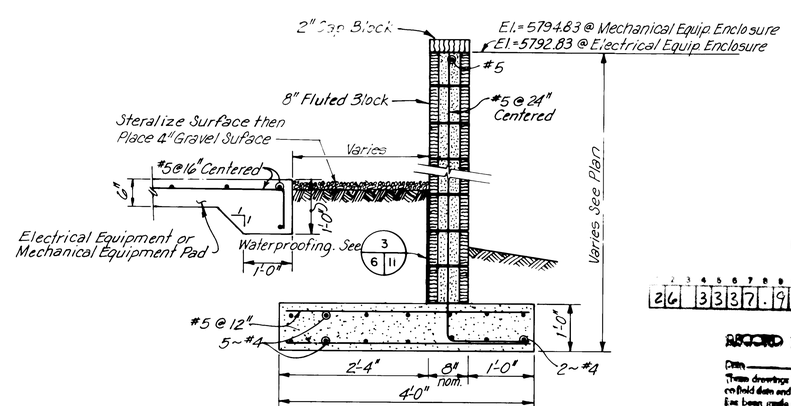

6 / 7 13 / 6 9 SCREEN WALL SECTION
N.T.S.

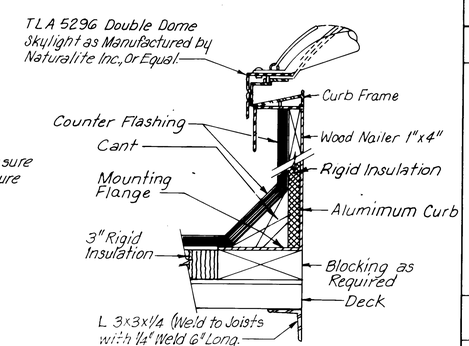

9 / 12 13 SKYLIGHT DETAIL
N.T.S.

2	3	4	5	6	7	8	9	10	11	12	13	14	15
2	6	3	3	3	7	.	9	0	1	3	9	2	

RECORD DRAWING
Date
These drawings have been revised based on field data and every reasonable attempt has been made to depict construction as actually performed

AS BUILT INFORMATION
CONTRACTOR: MDC Construction Co.
WORK STAKED BY: ALBUQUERQUE SURVEYING CO. INC. DATE 2/91
INSPECTED BY: L-H, INC. DATE 12/91
ACCEPTANCE BY: KEEGANWERX INC. DATE 12/91
FIELD VERIFICATION BY: LEEGHILL
DRAWINGS CORRECTED BY: KEEGANWERX INC. DATE 2/92
MICRO-FILM INFORMATION
RECORDED BY
DATE
NO.

BENCH MARKS

SURVEY INFORMATION
FIELD NOTES

NO.	BY	DATE

ENGINEER'S SEAL
K. W. WELTY 6574 NEW MEXICO PROFESSIONAL ENGINEER

NO.	DATE	REMARKS	BY
		REVISIONS	

DESIGN
DESIGNED BY K.W. WELTY DATE JUNE 1990
DRAWN BY L-H, INC. DATE JUNE 1990
CHECKED BY K.W. WELTY DATE JUNE 1990

CITY OF ALBUQUERQUE
PUBLIC WORKS DEPARTMENT
ENGINEERING GROUP

TITLE: GUTIERREZ PUMP STATION RECONSTRUCTION
MISCELLANEOUS STRUCTURAL DETAILS

APPROVALS	ENGINEER	DATE	APPROVALS	ENGINEER	DATE
DRC CHAIRMAN			WATER	R.W. Kane	11-13-90
TRANSPORTATION	N/A RHD	11-16-90	WASTE WATER	R.W. Kane	11-13-90
HYDROLOGY	CDM	11-15-90			

PROJECT NO. 3337.90 | MAP NO. F-22 | SHEET 13 OF 15

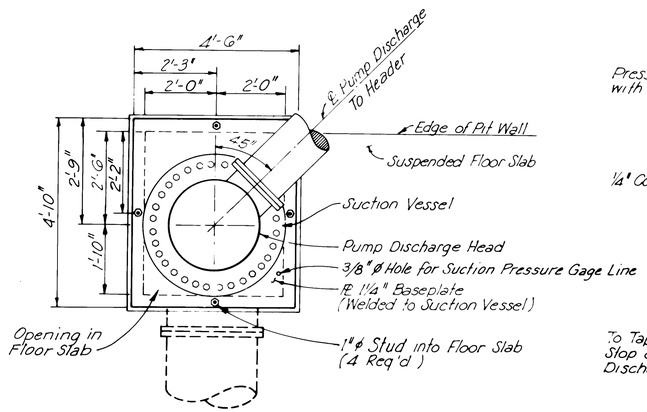

PLAN

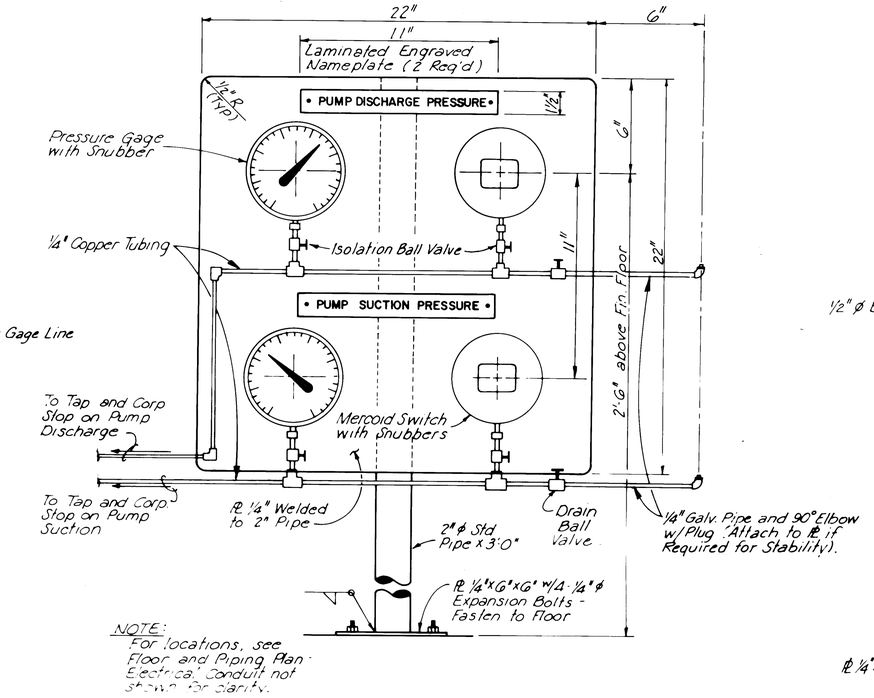

NOTE:
For locations, see Floor and Piping Plan. Electrical Conduit not shown for clarity.

2/10/14 PRESSURE GAGE STAND DETAIL
NTS

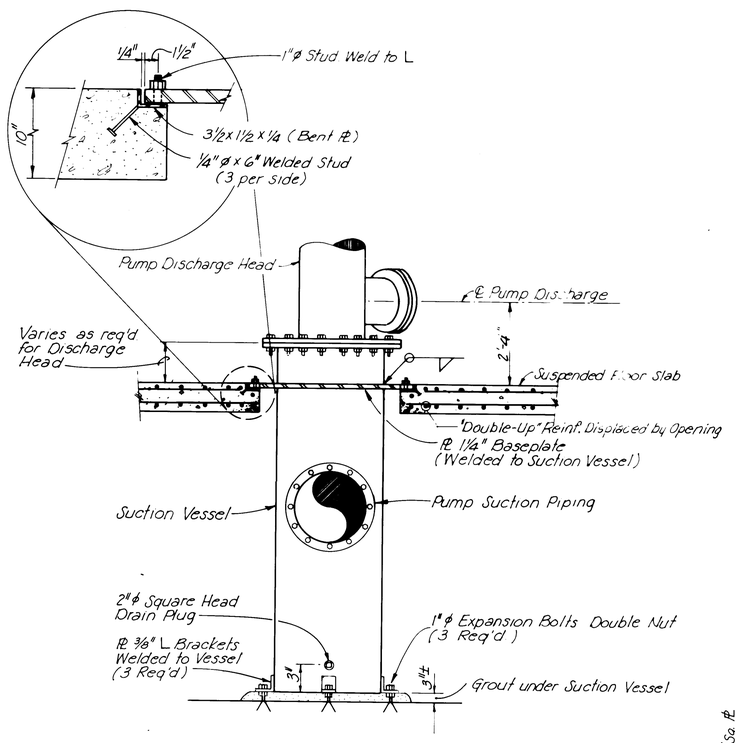

SECTION

1/7/14 SUCTION VESSEL DETAIL
NTS

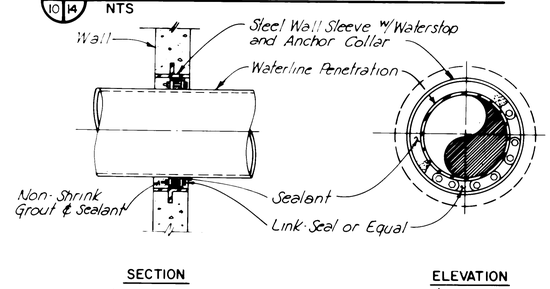

SECTION ELEVATION

3/10/14 WALL PENETRATION DETAIL
NTS

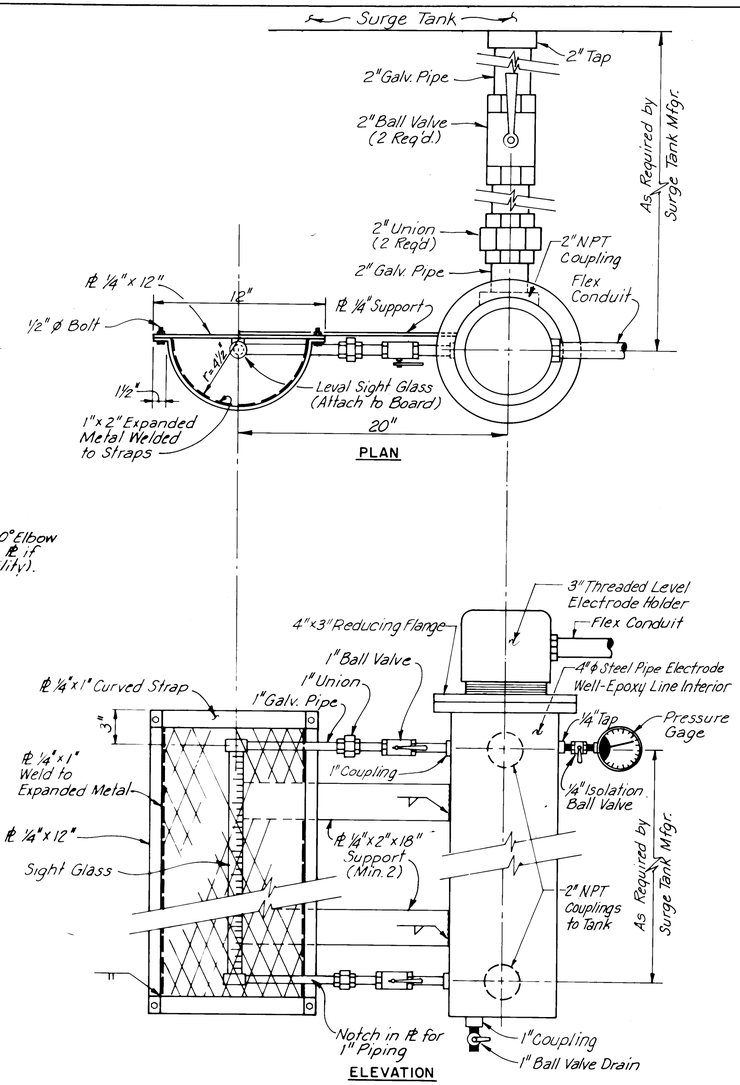

ELEVATION

5/9/14 SURGE TANK PROBE WELL DETAIL
NTS

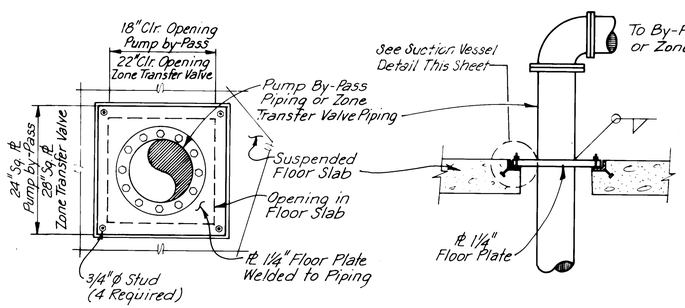

4/7/14/10 PIPE FLOOR PLATE DETAIL
NTS

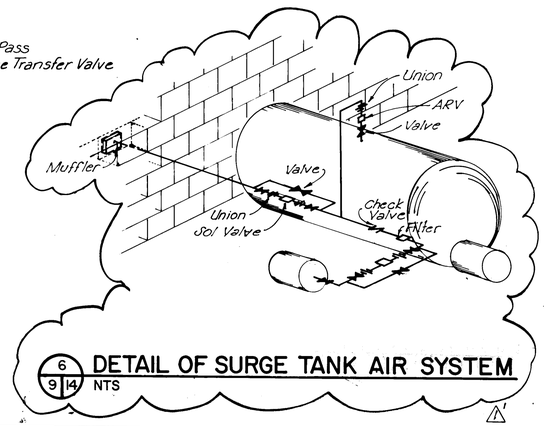

6/9/14 DETAIL OF SURGE TANK AIR SYSTEM
NTS

RECORD DRAWING
FEB 1992
These drawings have been revised based on field data and every reasonable attempt has been made to depict construction as actually performed.

2 6 3 3 3 7. 9 0 1 4 9 2

NO.	DATE	REMARKS	BY
1	2/92	Added Detail No. 6	

REVISIONS

DESIGN			
DESIGNED BY	E. LIVINGSTON	DATE	JUNE 1990
DRAWN BY	L-H, INC.	DATE	JUNE 1990
CHECKED BY	K.W. WELTY	DATE	JUNE 1990

AS BUILT INFORMATION

CONTRACTOR: MOC Construction Co.
WORK STAKED BY: SURVEYING CO. INC. DATE 2/91
INSPECTORS: ALBUQUERQUE
MATERIALS TESTING: LEECSHILL INC. DATE 12/91
FIELD TESTING: LEECSHILL
CERTIFICATION BY: LEECSHILL INC. DATE 12/91
CLEANING: LEECSHILL
CORRECTED BY: LEECSHILL INC. DATE 2/92
MICRO-FILM INFORMATION
RECORDED BY DATE
NO

BENCH MARKS

SURVEY INFORMATION

NO.	BY	DATE	FIELD NOTES

ENGINEER'S SEAL

CITY OF ALBUQUERQUE
PUBLIC WORKS DEPARTMENT
ENGINEERING GROUP

TITLE: GUTIERREZ PUMP STATION RECONSTRUCTION
MISCELLANEOUS PIPING DETAILS

APPROVALS	ENGINEER	DATE	APPROVALS	ENGINEER	DATE
DRC CHAIRMAN	[illegible]	[illegible]	WATER	R.W. Kane	11-13-90
TRANSPORTATION	N/A RHO	11-16-90	WASTE WATER	R.W. Kane	11-13-90
HYDROLOGY	LDM	11-15-90			

PROJECT NO. 3337.90 | MAP NO. F-22 | SHEET 14 OF 15

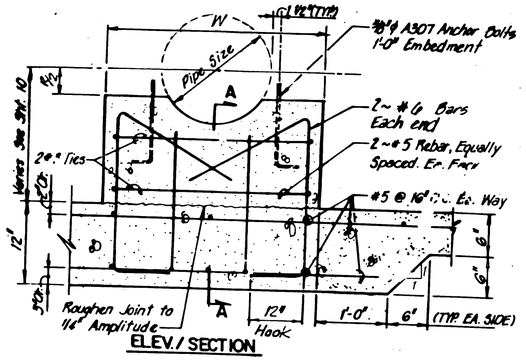

ELEV./SECTION

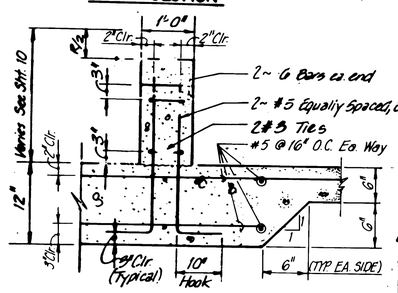

SECTION A-A

PIPE CRADLE TABLE

No.	PIPE SIZE	"W"
1	42"	54"
2	30"	42"
3	24"	36"

1 / 7 15 PIPE CRADLE DETAILS

NOT TO SCALE

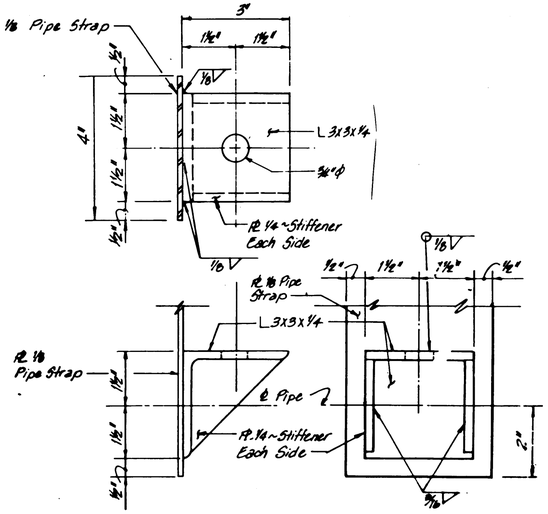

3 / 15 15 PIPE STRAP BRACKET DETAILS

SCALE: 1 1/2" = 1"

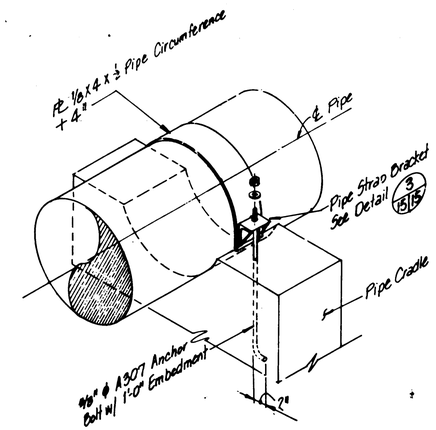

4 / 15 15 PIPE STRAP DETAILS

NOT TO SCALE

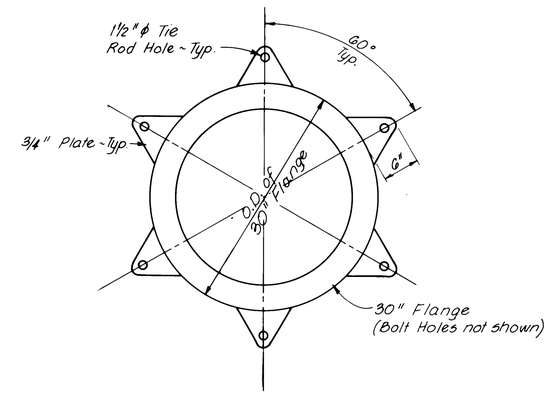

5 / 15 15 HARNESS LUG DETAIL

SCALE: 1" = 1'-0"

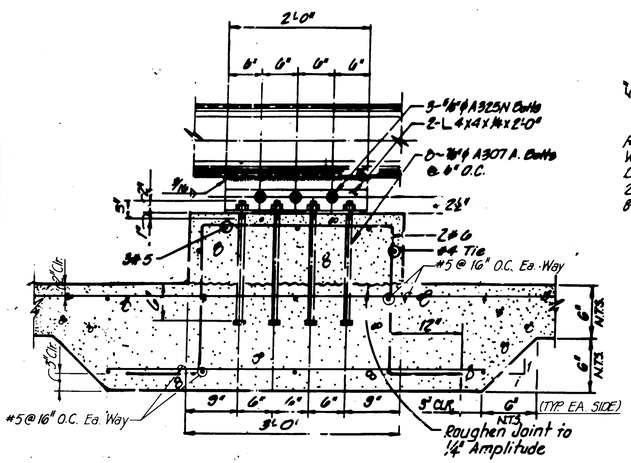

LONGITUDINAL SECTION

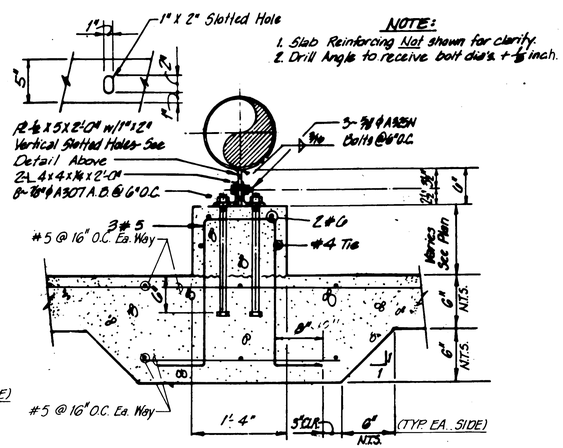

TRANSVERSE SECTION

2 / 7 15 PIPE RESTRAINT BLOCK DETAILS

SCALE: 1" = 1'-0"

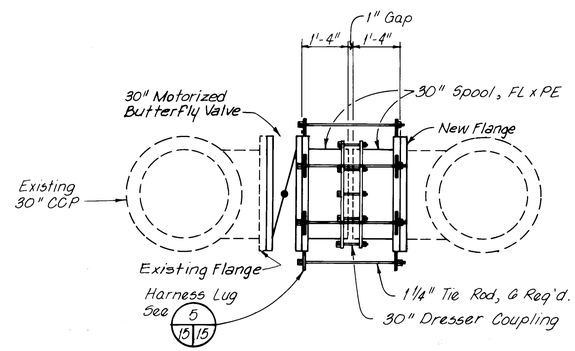

6 / 5 15 DETAIL - VALVE REPLACEMENT AT BY PASS VALVE PIT

SCALE: 1/2" = 1'-0"

1	2	3	4	5	6	7	8	9	10	11	12	13	14	15
2	6	3	3	3	7	.	9	0	1	5	9	2		

AS BUILT INFORMATION

CONTRACTOR MCC Construction Co.
WORK STAKED BY Albuquerque Geodetic Inc. DATE 2/91
INSPECTORS Geodetic
ALIGNMENT BY Hernandez Inc. DATE 12/91
FIELD CHECK BY Geodetic
VERIFICATION BY Hernandez Inc. DATE 12/91
FINAL STAKE BY Hernandez Inc. DATE 2/92
CORRECTED BY Hernandez Inc. DATE 2/92
MICRO-FILM INFORMATION
RECORDED BY DATE
NO

BENCH MARKS

SURVEY INFORMATION

FIELD NOTES

NO.	BY	DATE

ENGINEER'S SEAL

NO.	DATE	REMARKS	BY

REVISIONS

DESIGNED BY E. LIVINGSTON DATE JUNE 1990
DRAWN BY L-H, INC. DATE JUNE 1990
CHECKED BY K.W. WELTY DATE JUNE 1990

RECORD DRAWINGS
DATE FEB 1992
These drawings have been reviewed based on field data and every reasonable attempt has been made to depict construction actually performed

CITY OF ALBUQUERQUE
PUBLIC WORKS DEPARTMENT
ENGINEERING GROUP

TITLE: GUTIERREZ PUMP STATION RECONSTRUCTION
PIPE CRADLE, RESTRAINT AND STRAP DETAILS

APPROVALS	ENGINEER	DATE	APPROVALS	ENGINEER	DATE
DRC CHAIRMAN	Roger Stone	11/16/90	WATER	R.W. Kane	11-13-90
TRANSPORTATION	RHD	11-16-90	WASTE WATER	R.W. Kane	11-13-90
HYDROLOGY	L Dom	11-15-90			

PROJECT NO. 3337.90 | MAP NO. F-22 | SHEET 15 OF 15

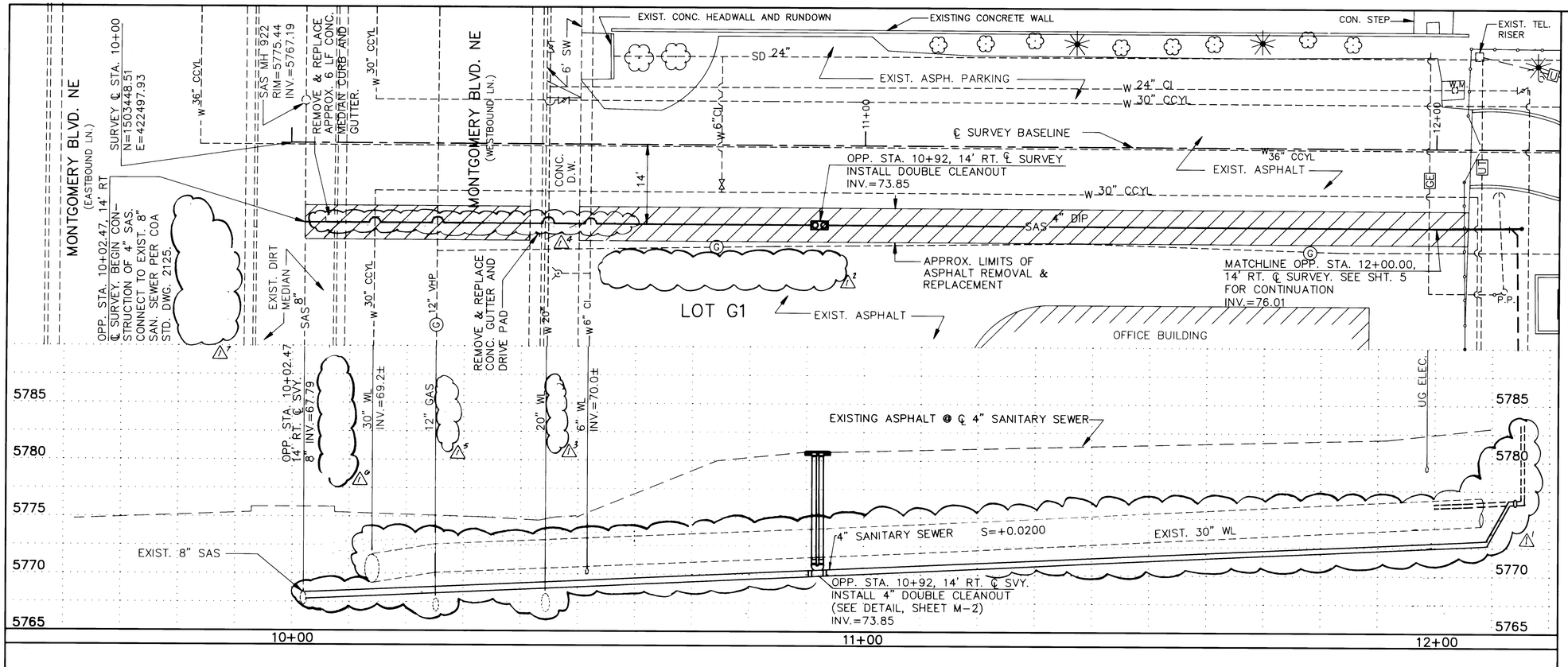

N

SCALE:
HORIZ. 1"=10'
VERT. 1"=5'

NOTES:

1. EXISTING UTILITIES SHOWN ARE APPROXIMATE. CONTRACTOR TO FIELD VERIFY PRIOR TO TRENCHING.
2. PAVEMENT REPLACEMENT SECTION IN MONTGOMERY BLVD. SHALL BE COA STD. DWG. 2465. (ARTERIAL)
3. PAVEMENT REPLACEMENT SECTION IN PARKING LOT SHALL BE COA STD. DWG. 2465. (RESIDENTIAL)
4. SUPPORT 30" CCYL WATERLINE AND/OR GAS LINE IF REQUIRED DURING CONSTRUCTION OF 4" SANITARY SEWER.

RECORD DRAWINGS
FEB 1992
These drawings have been revised based on field data and every reasonable attempt has been made to depict construction as actually performed

8026.21CD1 / GUTIEPP.DWG

AS BUILT INFORMATION
CONTRACTOR MCC Construction Co
WORK STAKED BY ALBUQUERQUE Surveying Co. INC DATE 2/91
INSPECTOR'S ACCEPTANCE BY Hakkenwerk inc DATE 12/91
VERIFICATION BY Hakkenwerk inc DATE 12/91
DRAWINGS COMPILED BY LEGGHILL Engineering Inc DATE 2/92
MICRO-FILM INFORMATION
RECORDED BY DATE
NO.

BENCH MARKS
THE STATION IS AN ACS BRASS TABLET STAMPED "10-F22A" LOCATED ON THE NORTH CURB OF MONTGOMERY BLVD. NE AT THE INTERSECTION OF MONTGOMERY BLVD. AND SHENANDOAH PL. NE.
ELEVATION=5831.93 (1ST ORDER)

SURVEY INFORMATION
FIELD NOTES

NO.	BY	DATE
1.	ALBUQ. SURVEY	5/90

ENGINEER'S SEAL
KEVIN W. KANE
REGISTERED PROFESSIONAL ENGINEER
NEW MEXICO
10-24-90

NO.	DATE	REMARKS	BY
1	2/92	Converted 4" SAS grade, Removed Concrete Encasement, Notes & Inv. Inverts	

REVISIONS

		DATE
DESIGNED BY	T. J. MARTINI	JUNE 1990
DRAWN BY	T. J. MARTINI	JUNE 1990
CHECKED BY	E. C. LIVINGSTON	JUNE 1990

CITY OF ALBUQUERQUE
PUBLIC WORKS DEPARTMENT
ENGINEERING GROUP

TITLE:
GUTIERREZ PUMP STATION RECONSTRUCTION
4" SANITARY SEWER PLAN AND PROFILE

APPROVALS	ENGINEER	DATE	APPROVALS	ENGINEER	DATE
DRC CHAIRMAN	[illegible]	11-16-90	WATER	R.W. Kane	11-13-90
TRANSPORTATION	N/A		WASTE WATER	R.W. Kane	11-13-90
HYDROLOGY	[illegible]	11-15-90			

PROJECT NO.	MAP NO.	SHEET	OF
3337	F-22	U-1	U-2

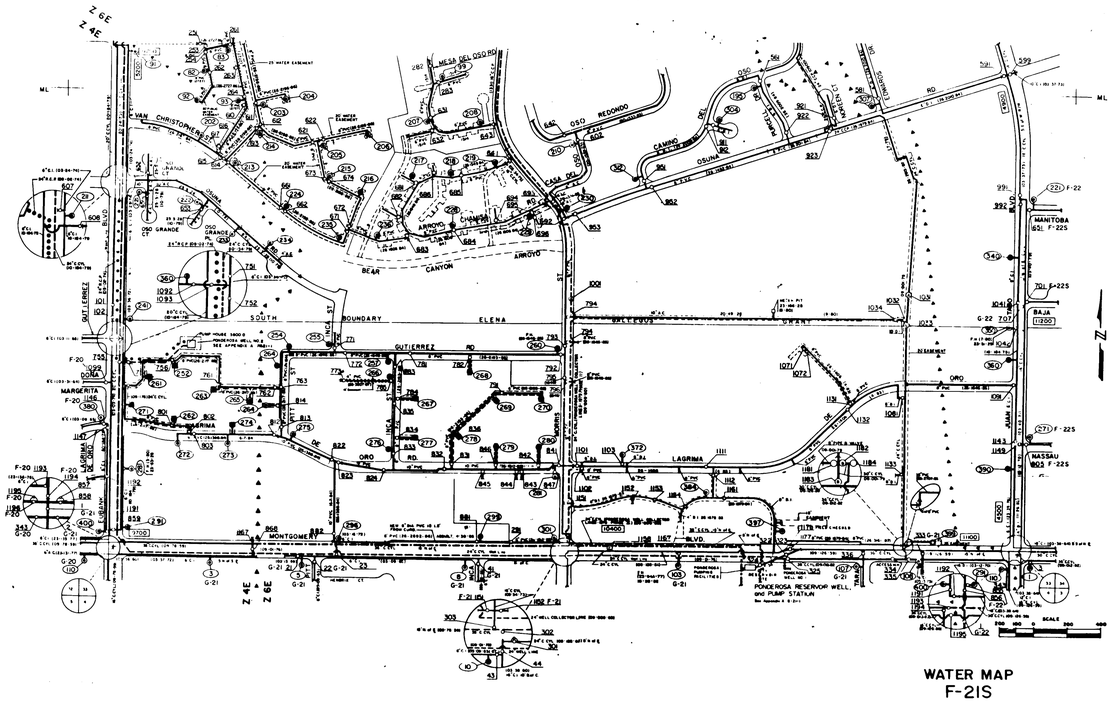

WATER MAP
F-21S

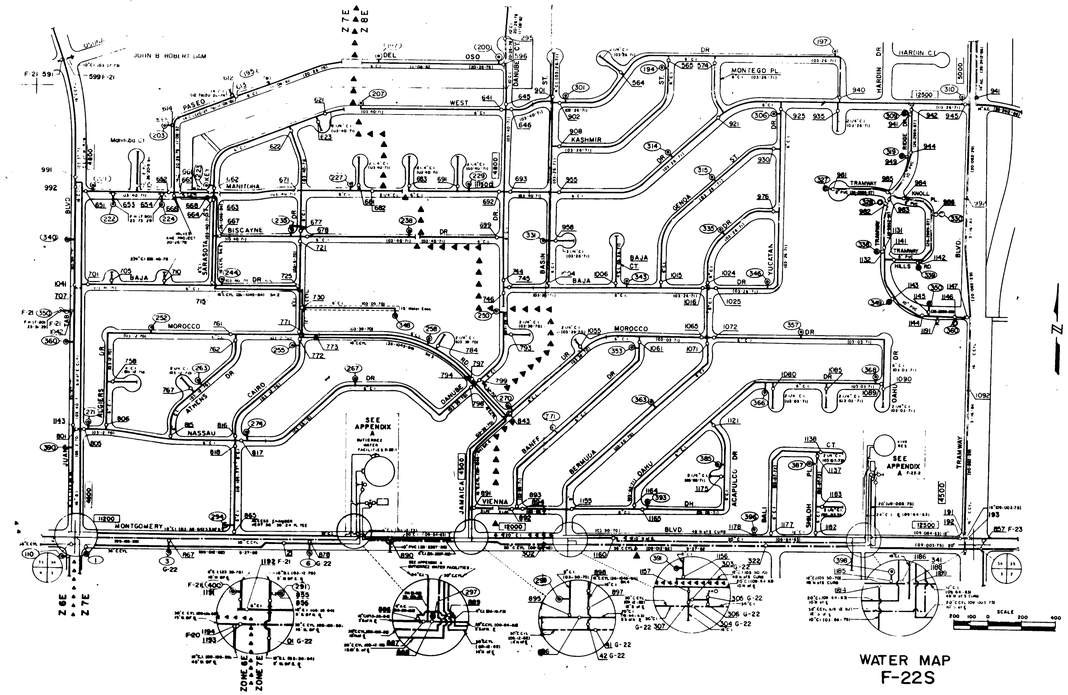

WATER MAP
F-22S

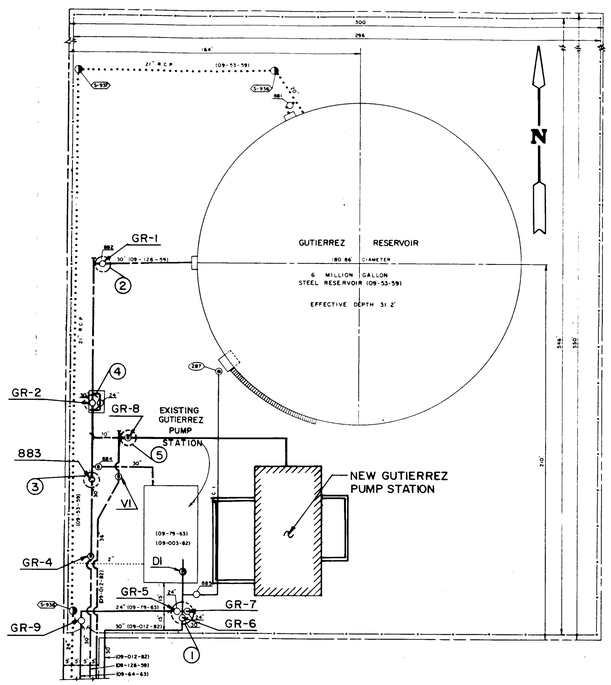

GUTIERREZ RESERVOIR AND PUMP STATION

COORDINATION OF KEY CONSTRUCTION ELEMENTS

	ELEMENT NO.	DESCRIPTION OF WORK ELEMENTS	WORK ELEMENT TIME REQUIREMENTS (HOURS)	MAX. FACILITIES DOWN TIME (HOURS)	FACILITIES OUT OF SERVICE	COMMENTS	VALVES TO BE OPERATED
	1	a. REPLACE DISCHARGE LINE CROSS.	8	16	GUTIERREZ PUMP STATION	PONDEROSA PUMP STATION TO DEADHEAD AGAINST VALVES GR-9, 41G-22 AND 42G-22	D-1, GR-9, 41G-22, 42G-22
		b. REPLACE VALVE GR-5	8				
		c. REPLACE VALVE GR-6	8				
		d. REPLACE VALVE GR-7	8				
	2	REPLACE VALVE GR-1	8	8	GUTIERREZ RESERVOIR	PONDEROSA PUMP STATION TO DEADHEAD AGAINST VALVE GR-2 FOR GUTIERREZ SUCTION. GUTIERREZ RESERVOIR SHALL NOT BE DRAINED.	GR-2 RESERVOIR SHALL NOT BE DRAINED CONTRACTOR TO "PLUG" OPENING TO SUIT HIS CONSTRUCTION PREFERENCE.
	3	REPLACE VALVE 883	8	8	GUTIERREZ RESERVOIR, GUTIERREZ PUMP STATION	PONDEROSA PUMP STATION TO DEADHEAD AGAINST VALVES GR-4 AND VI	884, GR-8, GR-1, GR-4, V-1
	4	REPLACE VALVE GR-2	16	16	GUTIERREZ RESERVOIR, GUTIERREZ PUMP STATION	PONDEROSA PUMP STATION TO DEADHEAD AGAINST VALVES 883 AND VI	VI, GR-1, 883, 884, GR-8
	5	REPLACE VALVE GR-8	8	8	GUTIERREZ RESERVOIR, GUTIERREZ PUMP STATION	PONDEROSA PUMP STATION TO DEADHEAD AGAINST VALVES 883 AND VI	VI, GR-1, 883, 884

VALVE LOCATION

VALVE NO.	SIZE	LOCATION
GR-1	30"	ON SITE, TRANSMISSION LINE INTO RESERVOIR
GR-2	30"	ON SITE, BY PASS VALVE PIT
GR-4	30"	ON SITE, TRANSMISSION LINE INTO RESERVOIR
GR-9	30"	ON SITE, PUMP STATION DISCHARGE LINE
41G-22	30"	MONTGOMERY BLVD. AND JAMAICA
42G-22	16"	MONTGOMERY BLVD. AND JAMAICA
883	30"	ON SITE, TRANSMISSION LINE INTO RESERVOIR
884	30"	ON SITE, PUMP STATION SUCTION
VI	36"	ON SITE, TRANSMISSION LINE INTO RESERVOIR
DI.	24"	BUTTERFLY VALVE INSIDE PUMP STATION ON DISCHARGE HEADER.

NOTES

1. THE CONTRACTOR MUST HAVE ALL FITTINGS, MATERIALS, AND EQUIPMENT ON SITE PRIOR TO VALVE SHUT OFF FOR REQUIRED ELEMENT. ALL EXCAVATIONS MUST BE COMPLETE EXCEPT AS NECESSARY FOR MAINTAINING THE SYSTEM SAFE OPERATION WHILE UNDER PRESSURE.
2. ALL HOURS LISTED ARE CONTINUOUS HOURS, NOT BASED ON 8 HOUR WORKING DAY. PERFORMANCE PERIOD BEGINS WHEN CITY HAS MADE ALL APPLICABLE VALVE CLOSURES.
3. THE CONTRACTOR MUST REQUEST A WATER SHUT-OFF IN WRITING WITHIN 5 (FIVE) DAYS NOTICE, PER STANDARD CITY OF ALBUQUERQUE PROCEDURE. A 24 HOUR RECOVERY PERIOD SHALL BE PROVIDED BETWEEN EACH ELEMENT.
4. WITHIN 5 DAYS AFTER RECEIPT OF CONTRACTOR'S SHUT-OFF REQUEST, TRIAL SHUT-OFFS ASSOCIATED WITH ABOVE WORK WILL BE CONDUCTED. CITY TO FURNISH LABOR AND APPURTENANCES NECESSARY TO VERIFY COMPLETENESS OF SHUTOFFS.
5. THE CONTRACTOR WILL BE ASSESSED $100/HR. (ONE HUNDRED DOLLARS PER HOUR) FOR ANY TIME TAKEN OVER THE FACILITY DOWNTIME ALLOWED FOR EACH WORK ELEMENT.
6. THE CONTRACTOR IS NOT TO OPERATE ANY VALVES THAT MAY AFFECT SYSTEM OPERATION.
7. CONTRACTOR SHALL BE RESPONSIBLE FOR ANY WATER DRAIN LINES, PUMPING, OR WATERLINE VENTING ASSOCIATED WITH VALVE REMOVALS AS AN INCIDENTAL COST TO THE VALVE REMOVAL AND REPLACEMENT.
8. ALL VALVES SHALL BE REPLACED PRIOR TO CONSTRUCTION OF NEW PUMP STATION.

RECORD DRAWING
FEB 1992
"These drawings have been revised based on field data and every reasonable attempt has been made to depict construction as actually performed"

LEGEND

- THRU TRANSMISSION LINE
- WATER DISTRIBUTION LINES
- WELL LINE
- GATE VALVE
- AIR RELIEF VALVE
- GATE VALVE W/ BYPASS
- FIRE HYDRANT
- END OF PROJECT
- (121) FIRE HYDRANT NUMBER
- 1150 VALVE NUMBER
- "A" WATERLINE RELOCATION

AS BUILT INFORMATION
CONTRACTOR MCC Construction Co
WORK STAKED BY ALBUQUERQUE DATE 2/91
INSPECTORS ACCEPTANCE BY LEGENHALL INC. DATE 12/91
FIELD VERIFICATION BY LEGENHALL INC. DATE 12/91
CORRECTED BY LEGENHALL INC. DATE 2/92
MICRO-FILM INFORMATION
RECORDED BY
DATE
NO.

BENCH MARKS

SURVEY INFORMATION
FIELD NOTES

NO.	BY	DATE

ENGINEER'S SEAL

NO.	DATE	REMARKS	BY

REVISIONS

DESIGNED BY	L-H, INC.	DATE AUG. 1990
DRAWN BY		DATE AUG. 1990
CHECKED BY		DATE AUG. 1990

CITY OF ALBUQUERQUE
PUBLIC WORKS DEPARTMENT
ENGINEERING GROUP

TITLE: GUTIERREZ PUMP STATION RECONSTRUCTION
WATER SHUT-OFF PLAN

APPROVALS	ENGINEER	DATE	APPROVALS	ENGINEER	DATE
D.R.C. Chair		11/16/90	WATER	R.W. Kane	11-13-90
Trans. Dev.	N/A	11-16-90	WASTE WATER	R.W. Kane	11-13-90
~~Utility Dev.~~					
Hyd	LDM	11-15-90			

DRAWING NO. 3337.90 | MAP NO. F-22 | SHEET U-2 OF U-2

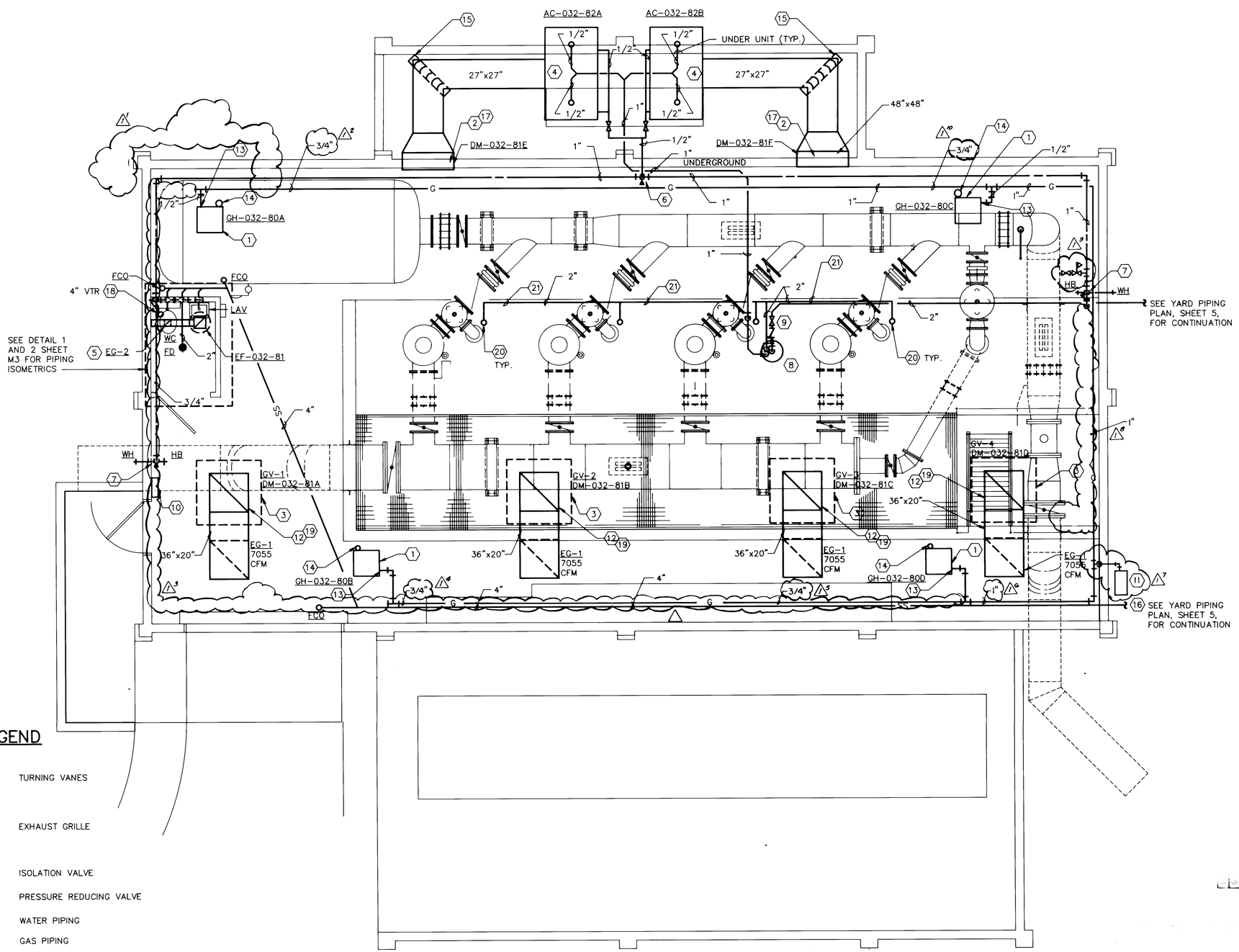

MECHANICAL FLOOR PLAN

SCALE: 1/4" = 1'-0"

LEGEND

- TURNING VANES
- EXHAUST GRILLE
- ISOLATION VALVE
- PRESSURE REDUCING VALVE
- WATER PIPING
- G — GAS PIPING
- SS — SANITARY SEWER
- VENT PIPING
- 90° ELBOW
- 90° ELBOW DOWN
- TEE

KEYED NOTES

1. INSTALL GAS FIRED UNIT HEATERS BETWEEN JOISTS. UNIT TO BE MOUNTED 16'-6" AFF. SEE DETAIL 1, SHEET M2, FOR MOUNTING.
2. 48"x48" WALL PENETRATION. INSTALL SECURITY BARS IN PENETRATION. SEE DTL. 2, SHEET M2.
3. RELIEF VENT WITH MOTORIZED DAMPER. MOUNT RELIEF VENT ON FACTORY SUPPLIED ROOF CURB. RELIEF VENT TO BE LINED WITH 1" ACOUSTICAL LINER. SEE DETAIL 4, SHEET M2.
4. PROVIDE EVAPORATIVE COOLER ON 4"x4" REDWOOD SKIDS. INSTALL FLEXIBLE CONNECTION BETWEEN EVAPORATIVE COOLER AND DUCTWORK AND INSTALL SLIDE DAMPER IN DUCT. SEE DETAIL 7, SHEET M2.
5. EG-2 LOCATED IN RESTROOM CEILING. ROUTE 6"x6" DUCT FROM EG-2 TO NORTH WALL, EXTEND DUCT UP WALL TO ABOVE CRANE HEIGHT THEN ROUTE TO EF-032-81 LOCATED 3' FROM WALL ON ROOF.
6. 1/2" CW LINE TO EVAPORATIVE COOLERS. INSTALL SHUT-OFF VALVE IN SUPPLY LINE AND IN DRAIN LINE. ROUTE DRAIN LINE TO BUILDING EXTERIOR. SLOPE THE SUPPLY LINE FROM THE EVAPORATIVE COOLERS BACK TO THE SUPPLY DROP. SEE DETAIL 8, SHEET M2.
7. 3/4" CW DROP TO ANTI-SIPHON HOSE BIBB AND FREEZE-PROOF WALL HYDRANT. MOUNT HOSE BIBB AND WALL HYDRANT 18" AFF.
8. COVERED SUMP PIT WITH SUBMERGED PUMP LOCATED ON FLOOR OF SUMP PIT. SEE DETAIL 11, SHEET M2.
9. 2" DISCHARGE PIPING TO BE ROUTED ON FLOOR OF SUMP PIT. PIPING TO PENETRATE WALL AT 5897'.
10. HEATING AND COOLING CONTROL PANEL. INSTALL TWO THERMOSTATS. BOTH ARE SINGLE STAGE COOLING AND SINGLE STAGE HEATING THERMOSTATS. THE BUILDING THERMOSTAT, TSL-032-80A/TSH-032-82A, SHALL BE PERMANENTLY SET AT 50°F FOR HEATING AND 85°F FOR COOLING. THE PERSONNEL THERMOSTAT SHALL BE ADJUSTABLE. BOTH THERMOSTATS SHALL HAVE A 3 DEGREE DEADBAND.
11. NEW GAS METER LOCATION. CONTACT GAS CO. OF NEW MEXICO FOR EXTENSION OF THE GAS LINE. REGULATOR AND METER TO BE SIZED FOR 350 CFH AND 12" W.C. SEE DETAIL 6, SHEET M2.
12. INSTALL SECURITY BARS IN ROOF PENETRATION. SEE DETAIL 2, SHEET M2.
13. FOR GAS CONNECTION TO GAS FIRED UNIT HEATER SEE DETAIL 9, SHEET M2.
14. FLUE THRU ROOF. SEE DETAIL 3, SHEET M2 FOR INSTALLATION REQUIREMENTS.
15. FOR DUCT SUPPORT SEE DETAIL 3, SHEET M3.
16. PIPE ELEVATION TO BE 5901' AT EXIT FROM BUILDING.
17. INSTALL MOTORIZED DAMPER INTERLOCKED WITH EVAPORATIVE COOLER.
18. VENT THRU ROOF. SEE DETAIL 5, SHEET M2.
19. FOR ROOF FRAMING SEE DETAIL 12, SHEET M2.
20. CONNECT 1" PVC PIPE TO SLEAVE. EXTEND 2" DRAIN LINE LOCATED 36" A.F.F.
21. ROUTE 2" PVC DRAIN LINE TO SUMP PIT.

RECORD DRAWING
FEB 1992
Date
These drawings have been revised based on field data and every reasonable attempt has been made to depict construction actually performed

AS BUILT INFORMATION
CONTRACTOR MCC Construction Co.
WORK STAKED BY ALBUQUERQUE ENGINEERING DATE 2/91
INSPECTOR'S ACCEPTANCE BY CITY OF ALBUQUERQUE DATE 12/91
FIELD VERIFICATION BY WEKSHOP INC DATE 12/91
CONTROLS VERIFICATION BY WEKSHOP INC DATE 2/92
CORRECTIONS CORRECTED BY WEKSHOP INC DATE 2/92
MICRO-FILM INFORMATION
RECORDED BY DATE
NO.

BENCH MARKS

SURVEY INFORMATION
FIELD NOTES

NO.	BY	DATE

ENGINEER'S SEAL

NO.	DATE	REMARKS	BY
1	2/92	Removed and Relocated Gas Lines, Gas Meter Changed Pipe Diameter.	

REVISIONS

DESIGN		
DESIGNED BY	CJW	DATE NOV. 9, 1990
DRAWN BY	RNF/PMC	DATE NOV. 9, 1990
CHECKED BY	-	DATE -

8026.21MD1/8026GMCH

CITY OF ALBUQUERQUE
PUBLIC WORKS DEPARTMENT
ENGINEERING GROUP

TITLE: GUTIERREZ PUMP STATION RECONSTRUCTION
MECHANICAL FLOOR PLAN

APPROVALS	ENGINEER	DATE	APPROVALS	ENGINEER	DATE
DRC CHAIRMAN	Roy Sibson	11/16/90	WATER	R.W. Kane	11-13-90
TRANSPORTATION	N A R HD	11-16-90	WASTE WATER	R.W. Kane	11-13-90
HYDROLOGY	CDM	11-15-90			

PROJECT NO. 3337.90 | MAP NO. F-22 | SHEET M1 OF 3

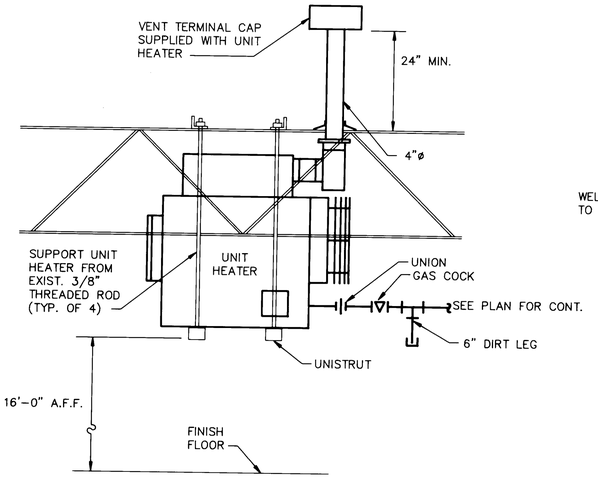

1 M1M2 UNIT HEATER DETAIL
NOT TO SCALE

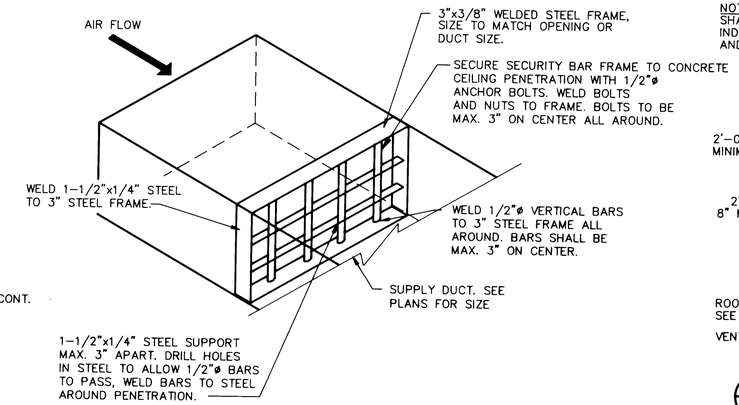

2 M1M2 SECURITY BAR DETAIL
SCALE: NONE

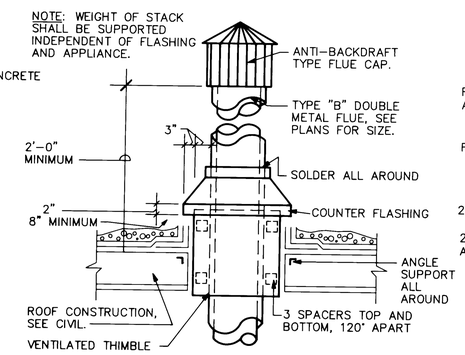

3 M1M2 FLUE THRU ROOF DETAIL
SCALE: NONE

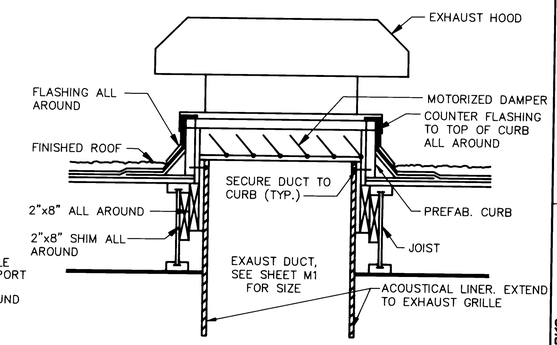

4 M1M2 EXHAUST HOOD DETAIL
SCALE: NONE

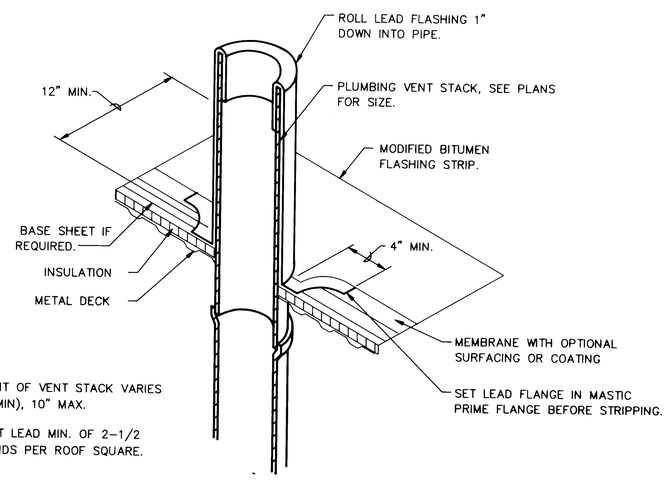

NOTE:
1. HEIGHT OF VENT STACK VARIES 8" (MIN), 10" MAX.
2. SHEET LEAD MIN. OF 2-1/2 POUNDS PER ROOF SQUARE.

5 M1M2 VENT THRU ROOF DETAIL
SCALE: NONE

NOTE:
GAS SERVICE, GAS METER, AND REGULATOR BY LOCAL GAS COMPANY. ALL COSTS WILL BE INCURRED BY THIS CONTRACTOR.

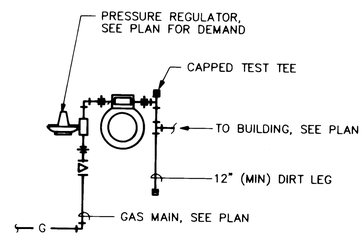

6 M1M2 GAS METER DETAIL
SCALE: NONE

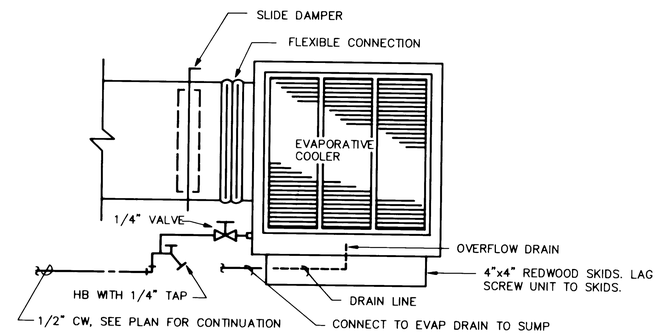

7 M1M2 EVAPORATIVE COOLER DETAIL
SCALE: NONE

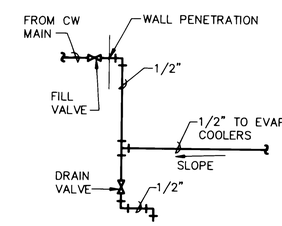

8 M1M2 EVAP. COOLER WATER PIPING DETAIL
SCALE: NONE

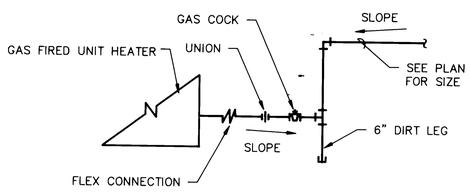

9 M1M2 GAS CONNECTION DETAIL
SCALE: NONE

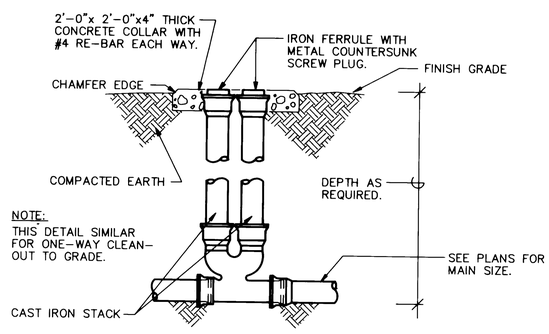

NOTE:
THIS DETAIL SIMILAR FOR ONE-WAY CLEAN-OUT TO GRADE.

10 M1M2 CLEANOUT TO GRADE
SCALE: NONE

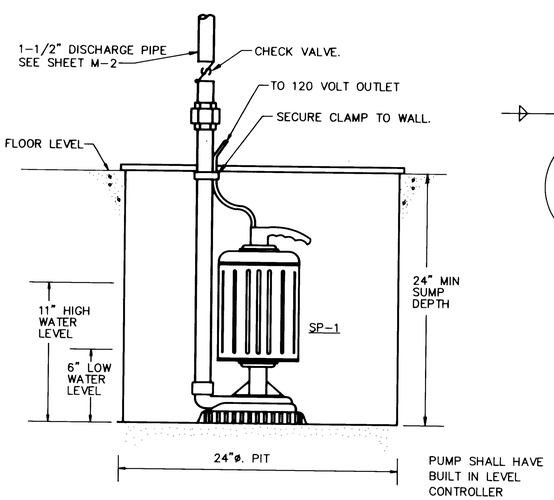

11 M1M2 SUMP PUMP
SCALE: NONE

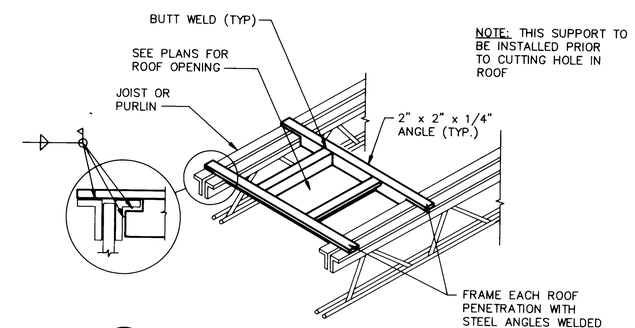

NOTE: THIS SUPPORT TO BE INSTALLED PRIOR TO CUTTING HOLE IN ROOF

12 M1M2 ROOF FRAMING DETAIL
SCALE: NONE

8026.21MD1/8026GDTL

1 2 3 4 5 6 7 8 9 10 11 12 13 14 15
2 6 3 3 3 7 . 9 0 1 9 9 2

RECORD DRAWING
Date FEB 1992
Where drawings have been revised based on field data and every reasonable attempt has been made to depict construction as actually performed

CITY OF ALBUQUERQUE
PUBLIC WORKS DEPARTMENT
ENGINEERING GROUP

TITLE: GUTIERREZ PUMP STATION RECONSTRUCTION
MECHANICAL DETAILS

APPROVALS	ENGINEER	DATE	APPROVALS	ENGINEER	DATE
DRC CHAIRMAN	Richard Dinn	11/16/90	WATER	R.W. Kane	11-13-90
TRANSPORTATION	N/A RHD	11-16-90	WASTE WATER	R.W. Kane	11-13-90
HYDROLOGY	LDM	11-15-90			

PROJECT NO. 3337.90 | MAP NO. F-22 | SHEET M2 OF 3

AS BUILT INFORMATION
CONTRACTOR M.C.C. Construction Co.
WORK STAKED BY A.C.B./J.C.V.R.W.C. SURVEYING CO. INC. DATE 2/91
ACCEPTANCE BY LEE ENGINEERING & CONSTRUCTION INC. DATE 12/91
FIELD VERIFICATION BY LEE ENGINEERING & CONSTRUCTION INC. DATE 12/91
DRAWINGS CORRECTED BY C.B.D. WILL INC. DATE 2/92
MICRO-FILM INFORMATION
RECORDED BY DATE
NO.

BENCH MARKS

SURVEY INFORMATION
FIELD NOTES

NO.	BY	DATE

ENGINEER'S SEAL

NO.	DATE	REMARKS	BY
		REVISIONS	
		DESIGN	

DESIGNED BY CJW DATE NOV. 9, 1990
DRAWN BY RNF DATE NOV. 9, 1990
CHECKED BY - DATE -

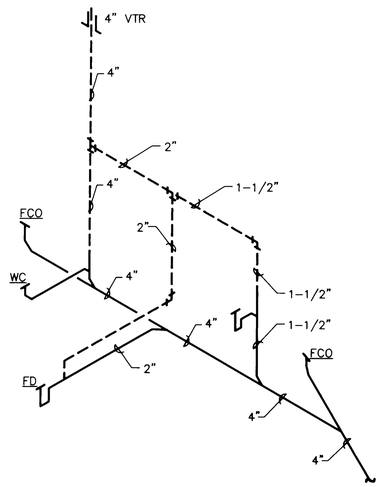

1 M1M3 WASTE AND VENT PIPING ISOMETRIC
SCALE: NONE

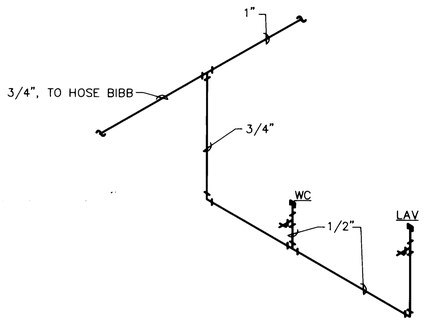

2 M1M3 WATER PIPING ISOMETRIC
SCALE: NONE

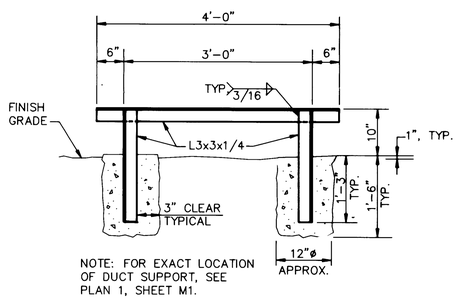

NOTE: FOR EXACT LOCATION OF DUCT SUPPORT, SEE PLAN 1, SHEET M1.

3 M1M3 TYPICAL DUCT SUPPORT
SCALE: NONE

EQUIPMENT SCHEDULE

SYMBOL	DESCRIPTION
AC-032-82A AC-032-82B	EVAPORATIVE COOLER: SINGLE SPEED EVAPORATIVE COOLER WITH SIDE DISCHARGE. BLOWER MOTOR SHALL BE SPECIFICALLY DESIGNED FOR EVAPORATIVE COOLER APPLICATION WITH SEALED FOR LIFE BEARINGS AND ADJUSTABLE SHEAVES. ARVIN MASTERCOOL OR EQUAL MODEL CFM S.P. H.P. V/P MS625 14,110 0.4 7.5 208/3
GH-032-80A GH-032-80B GH-032-80C GH-032-80D	GAS FIRED UNIT HEATER: EQUIPPED FOR NATURAL GAS, BURNER SHUTTERS, VERTICAL LOUVERS, STAINLESS STEEL BURNERS, SPARK IGNITED INTERMITTENT SAFETY PILOT WITH ELECTRONIC FLAME SUPERVISION AND TIMED LOCKOUT, AND VENT TERMINATION CAP. REZNOR OF EQUAL MODEL BTUH INPUT BTUH OUTPUT FAN H.P. SIZE VENT V/P TYPE FE-100 100,000 80,000 1/30 4" 115/1 POWER VENTED
EF-032-81	ROOF EXHAUSTER: CENTRIFUGAL ROOF EXHAUSTER. GREENHECK OR EQUAL. MODEL CFM S.P. H.P. V/P G-60 91 0.250 1/60 115/1
GV-1 THRU 4	RELIEF HOODS: HEAVY GAUGE ALUMINUM HOUSING WITH 1" OF SOUND DEADENING MATERIAL APPLIED TO THE UNDERSIDE OF THE HOOD AND THROAT. 115 VOLT MOTORIZED DAMPERS, BIRDSCREEN, AND HINGED HOOD, GREENHECK FABRA HOOD.
DM-032-81A THRU 81E	MOTORIZED DAMPER: 16 GAGE GALVANIZED STEEL CHANNEL PARALLEL WITH CORNER BRACES, 8" BLADES WITH 115 VOLT FACTORY INSTALLED MOTOR OPERATOR. RUSKIN CD358 OR EQUAL.
EG-1 EG-2	EXHAUST GRILLE: EGGCRATE EXHAUST GRILLE, SURFACE MOUNTED, WITH WHITE FINISH, AND OBD. TITUS OR EQUAL. MODEL SIZE GRID SIZE EG-1 50F 36"x36" 1" EG-2 50F 6"x6" 1/2"
FD	FLOOR DRAIN: CAST IRON BODY, FLASHING COLLAR, ADJUSTABLE, NICKEL BRONZE STRAINER, SMITH NO. 2010-A.
FCO	FLOOR CLEANOUT: CAST IRON WITH ROUND, NICKEL BRONZE ADJUSTABLE TOP. SMITH 4020.
DCO CO	CLEAN OUT: CAST IRON CLEANOUT WITH ADJUSTABLE ROUND TOP, SMITH 4231.
LAV	LAVATORY: WALL HUNG VITREOUS CHINA LAVATORY WITH FRONT OVERFLOW, FAUCET LEDGE, SELF DRAINING DECK AREA , AND PUNCHED SINGLE HOLE, ELJER 051-2231. SELF CLOSING FAUCET, ELJER 559-2890. LAVATORY DRAIN, ELJER 803-0557.
WC	WATER CLOSET: HANDICAPPED TANK TYPE WITH ELONGATED VITREOUS CHINA TOILET, SIPHON JET ACTION BOWL, CLOSE COUPLED TANK WITH BOLT CAPS. AMERICAN STANDARD NO. 2108.408. OLSONITE NO. 44 CLOSED FRONT SEAT WITH COVER.
SP-1	SUMP PUMP: AUTOMATIC SUBMERSIBLE SUMP PUMP, SPLIT PHASE MOTOR, SEALED FOR LIFE DOUBLE BALL BEARINGS AND AUTOMATIC RESET THERMAL OVERLOAD PROTECTION. BUNA N PARTS AND MECHANICAL SEALS. STEEL MOTOR HOUSING, CAST IRON END SHIELDS, NON-CLOGGING REINFORCED STYRENE IMPELLER AND RUSTPROOF AND PLASTIC BASE. TEEL OR EQUAL. MODEL H.P. GPH HEAD(FT) V/P 3P511 1/3 3900 10 115/1
WH	WALL HYDRANT: NON-FREEZING TYPE, BRONZE BOX WITH CHROME PLATED FACE, BRONZE HYDRANT, BRONZE CASING, HOSE CONNECTION, WITH UNIVERSAL INLET CONNECTION, VACUUM BREAKER, AND T HANDLE KEY. J.R. SMITH 5509.
HB	HOSE BIBB: NIBCO NO 63VB HOSE BIBB WITH VACUUM BREAKER.

AS BUILT INFORMATION
CONTRACTOR MCC Construction Co.
WORK STAKED BY Bohannan Huston, INC. DATE 2/91
INSPECTOR'S ACCEPTANCE BY Greenwood, Inc. DATE 12/91
FIELD VERIFICATION BY Greenwood, Inc. DATE 12/91
DRAWINGS CORRECTED BY Greenwood, Inc. DATE 7/92
MICRO-FILM INFORMATION
RECORDED BY DATE
NO.

BENCH MARKS

SURVEY INFORMATION
FIELD NOTES
NO. BY DATE

ENGINEER'S SEAL

NO.	DATE	REMARKS	BY
		REVISIONS	

DESIGN
DESIGNED BY CJW DATE NOV. 9, 1990
DRAWN BY RNF DATE NOV. 9, 1990
CHECKED BY – DATE –

1 2 3 4 5 6 7 8 9 10 11 12 13 14
5 6 3 6 2 7 . 9 0 . 0 9 2

8026.21M01 8

RECORD DRAWING
DATE FEB 1992
These drawings have been revised based on field data and every reasonable attempt has been made to depict construction as actually performed

CITY OF ALBUQUERQUE
PUBLIC WORKS DEPARTMENT
ENGINEERING GROUP

TITLE:
GUTIERREZ PUMP STATION RECONSTRUCTION
MECHANICAL SCHEDULE AND DETAILS

APPROVALS	ENGINEER	DATE	APPROVALS	ENGINEER	DATE
DRC CHAIRMAN	[signature]	11/16/90	WATER	R.W. Kane	11-13-90
TRANSPORTATION	N/A R.W.O	11-16-90	WASTE WATER	R.W. Kane	11-13-90
HYDROLOGY	CPA	11-15-90			

PROJECT NO. 3337.90 MAP NO. F-22 SHEET M3 OF 3

CONTROL SCHEMATICS AND INTERCONNECTION DIAGRAMS

SYMBOLS	DESCRIPTION
	FUSE
	CIRCUIT BREAKER
	DISCONNECT SWITCH
	GROUND CONNECTION
	MAINTAINED RED MUSHROOM HEAD PUSHBUTTON SWITCH
	MAINTAINED SELECTOR SWITCH
	MOMENTARY PUSHBUTTON SWITCH (NORMALLY OPEN)
	MOMENTARY PUSHBUTTON SWITCH (NORMALLY CLOSED)
	MOMENTARY PUSHBUTTON SWITCH–CONCEALED (NORMALLY OPEN)
	MOMENTARY PUSHBUTTON SWITCH–CONCEALED (NORMALLY CLOSED)
	PRESSURE SWITCH
	LEVEL SWITCH
	ROTATING POSITION SWITCH
	LIMIT SWITCH
	TEMPERATURE SWITCH
ETM	ELAPSED TIME METER
XM	VIBRATION METER
	RELAY, CONTACTOR, OR TIMER CONTACT (NORMALLY OPEN)
	RELAY, CONTACTOR, OR TIMER CONTACT (NORMALLY CLOSED)
	TIMED CONTACT (NORMALLY OPEN TIMED CLOSED)
	TIMED CONTACT (NORMALLY CLOSED TIMED OPEN)
	LEVEL PROBE
OL	OVERLOAD RELAY CONTACT (NORMALLY CLOSED)
	MOTOR STARTER OVERLOAD RELAY ELEMENT
	MOTOR INTERNAL THERMAL SWITCHES (NORMALLY CLOSED)
	SOLENOID VALVE COIL
	RELAY, CONTACTOR, OR TIMER COIL
M	MOTOR
R	INDICATOR LAMP (R = RED LENS / G = GREEN LENS / B = BLUE LENS)
	RTB TERMINATION
	FIELD DEVICE TERMINATION
C017	CONDUIT CALLOUT (P = POWER CIRCUIT. C = CONTROL CIRCUIT.) (SEE POWER AND CONTROL CONDUIT SCHEDULES.)
	CONTROL CABLE DRAIN WIRE
	CONTROL WIRE TAG IDENTIFICATION
	FIELD WIRING
	INTERNAL WIRING
M	CONTACTOR MECHANICAL INTERLOCK

ONE–LINE DIAGRAM

SYMBOLS	DESCRIPTION
	RISER POLE
	FUSE
	DISCONNECT SWITCH
	SURGE ARRESTOR
	CAPACITOR
	POTENTIAL TRANSFORMER
	CURRENT TRANSFORMER
A	AMMETER W/SELECTOR SWITCH
V	VOLTMETER W/SELECTOR SWITCH
W	WATTMETER
PF	POWER FACTOR METER
PMX	POWER MONITOR RELAY
M	MOTOR
#	FULL VOLTAGE NON–REVERSING MOTOR STARTER (W/NEMA SIZE)
#	FULL VOLTAGE REVERSING MOTOR STARTER (W/NEMA SIZE)
	KIRK–KEY INTERLOCK.

EQUIPMENT/INSTRUMENT ABBREVIATIONS

ABBREVIATION	DESCRIPTION
AC	AIR CONDITIONER
CA	AIR COMPRESSOR
DM	DAMPER MOTOR
DP	DISTRIBUTION PANELBOARD
EF	EXHAUST FAN
EH	ELECTRIC HEATER
FE	FLOW ELEMENT
FIT	FLOW INDICATING TRANSMITTER
GH	GAS HEATER
HS	HAND SWITCH
IC	INSTRUMENT CABINET
IR	IRRIGATION CONTROLLER
JC	POWER SUPPLY CABINET
JS	POWER CONSUMPTION PULSE METER
LE	LEVEL ELEMENT
LSH	LEVEL SWITCH (HIGH)
LT	LEVEL TRANSMITTER
M	MOTOR
MCC	MOTOR CONTROL CENTER
MCU	MOTOR CONTROL UNIT
MPF	MOTOR CAPACITOR/POWER FACTOR CORRECTION
MTB	MOTOR TERMINAL BLOCK
P	PUMP
PFS	PRIMARY FUSED SWITCH
PI	PRESSURE INDICATOR
PME	PRIMARY METERING ENCLOSURE
PSH	PRESSURE SWITCH (HIGH)
PSL	PRESSURE SWITCH (LOW)
PT	PRESSURE TRANSMITTER
RTB	REMOTE TERMINAL BLOCK CABINET
RTU	REMOTE TERMINAL UNIT
SP	SURGE CONTROL PANEL
SS	SAFETY SWITCH
ST	SURGE TANK
TE	TEMPERATURE ELEMENT
TSH	TEMPERATURE SWITCH (HIGH)
TSHH	TEMPERATURE SWITCH (HIGH/HIGH)
TSL	TEMPERATURE SWITCH (LOW)
VB	VALVE (HAND OPERATED–BELOW GRADE)
VCK	VALVE (CHECK)
VH	VALVE (HAND OPERATED–ABOVE GRADE)
VM	VALVE (MOTOR OPERATED)
VPC	VALVE (PUMP CONTROL)
VR	VALVE (REGULATED)
VS	VALVE (SOLENOID)
VWS	VALVE OVERTORQUE SWITCH
VZSO	VALVE LIMIT SWITCH (OPEN)
VZSC	VALVE LIMIT SWITCH (CLOSED)
XFMR/D	TRANSFORMER/DISTRIBUTION
XFMR/P	TRANSFORMER/POWER
XT	VIBRATION TRANSMITTER
ZSC	OTHER LIMIT SWITCH (CLOSED)
ZCO	OTHER LIMIT SWITCH (OPEN)

PIPING AND INSTRUMENT DIAGRAM

SYMBOLS	DESCRIPTION
	LOCAL MOUNTED INSTRUMENT
	PANEL MOUNTED INSTRUMENT
	PANEL MOUNTED INSTRUMENT (BEHIND BOARD)
	PROCESS LINE
	PROCESS LINE (EXISTING)
	INSTRUMENT SENSING LINE
	INSTRUMENT PNEUMATIC LINE
	INSTRUMENT ELECTRICAL LINE (ARROWS INDICATE SIGNAL DIRECTION)
14" 12"	CHANGE IN PIPE SIZE
	CHECK VALVE
M	BUTTERFLY VALVE (MOTOR OPERATED)
	BUTTERFLY VALVE (HAND OPERATED)
S	SOLENOID VALVE
	HAND VALVE
M	MAGNETIC FLOWMETER

INSTRUMENT LOOP IDENTIFICATION LIST

LOOP NUMBER	LOOP DESCRIPTION
	STATION PROCESS
00	RESERVOIR
01	SUCTION LINE
02	DISCHARGE LINE
06	SURGE SYSTEM
09	SUMP PUMP
10 THRU 40	**PUMP**
11 THRU 41	SUCTION LINE
12 THRU 42	DISCHARGE LINE
	STATION HVAC/LIGHTING
80	HEATING
81	VENTILATION
82	AIR CONDITIONING
85	LIGHTING
	STATION MISCELLANEOUS
79	ZONE TRANSFER VALVE
91	FLOOD
93	TEMPERATURE
94	POWER FAILURE
97	ELECTRICAL CONSUMPTION

OTHER ABBREVIATIONS

ABBREVIATION	DESCRIPTION
AFF	ABOVE FINISH FLOOR
AUX	AUXILIARY
BKR	CIRCUIT BREAKER
C	CONDUIT
CKT	CIRCUIT
FVNR	FULL VOLTAGE NON–REVERSING
FVR	FULL VOLTAGE REVERSING
GRD	GROUNDING CONDUCTOR OR GROUND
HID	HIGH INTENSITY DISCHARGE
NC OR N/C	NORMALLY CLOSED
NIC	NOT IN CONTRACT
NO OR N/O	NORMALLY OPEN
OL	MOTOR STARTER OVERLOAD ELEMENT
RTNG	RATING
TBOF	TO BOTTOM OF LIGHT FIXTURE

GENERAL NOTES

1 SEE SHEET E8 FOR SCHEDULES.

2 PUBLIC SERVICE COMPANY OF NEW MEXICO REPRESENATIVE FOR THIS PROJECT:
JIM VANN
ALVARADO SQUARE/MS–0270
ALBUQUERQUE, NEW MEXICO 87518
(505) 761–3426

PLANS

SYMBOLS	DESCRIPTION
—P—	OVERHEAD PRIMARY CONDUCTOR (NIC)
– –P– –	UNDERGROUND PRIMARY CONDUIT/CONDUCTOR (NIC)
P	PRIMARY POWER POLE (NIC)
	PRIMARY POWER POLE DOWN GUY (NIC)
	PRIMARY POWER POLE DEADEND ASSEMBLY (NIC)
	PRIMARY POWER POLE DOUBLE DEADEND ASSEMBLY (NIC)
P	PRIMARY PULLBOX (NIC)
	CONDUIT – ABOVE GROUND
	CONDUIT – BELOW GROUND
	GROUND COUNTERPOISE SYSTEM CONDUCTOR
	LIGHTNING PROTECTION SYSTEM ROOF CONDUCTORS
	LIGHTNING PROTECTION SYSTEM DOWN CONDUCTORS
	CONDUIT TURNING UP
	CONDUIT TURNING DOWN
DP–17	CONDUIT HOMERUN TO DP WITH BRANCH CIRCUIT NUMBER
MCC/2–D2	CONDUIT TO MCC/2 WITH CUBICLE NUMBER.
RTB	CONDUIT TO RTB.
IC	CONDUIT TO INSTRUMENT CABINET
	CONDUIT TO OTHER LOCATION PER KEYED NOTE.
P017	CONDUIT CALLOUT (P = POWER CIRCUIT. C = CONTROL CIRCUIT.) (SEE POWER AND CONTROL CONDUIT SCHEDULES)
A OR A	LIGHT FIXTURE, PENDANT MOUNT. (UPPERCASE LETTER INDICATES FIXTURE TYPE.) (SEE FIXTURE SCHEDULE)
B	LIGHT FIXTURE, WALL MOUNT. (UPPERCASE LETTER INDICATES FIXTURE TYPE.) (SEE FIXTURE SCHEDULE)
	DUPLEX RECEPTACLE, FLUSH MOUNT
	SPECIAL RECEPTACLE. SEE PLAN FOR DESCRIPTION.
	WALL SWITCH, FLUSH MOUNT (3=THREE–WAY, P=PILOT LAMP)
M	MANUAL MOTOR STARTER
T	MANUAL MOTOR STARTING SWITCH
	AIR TERMINAL
	GROUND ROD WITH EXOTHERMIC CONNECTION TO CONDUCTOR
	GROUND COUNTERPOISE SYSTEM CONNECTION, MECHANICAL
	GROUND COUNTERPOISE SYSTEM CONNECTION, EXOTHERMIC
	LIGHTNING PROTECTION SYSTEM CONNECTION, MECHANICAL
	CONDUIT RISER AND FLEXIBLE CONNECTION TO EQUIPMENT
	DISCONNECT SWITCH. (SEE PLANS FOR DESCRIPTION)
	JUNCTION BOX (CAST DEVICE BOX)
	CONTROL STATION (SEE PLANS FOR DESCRIPTION)
	PHOTOCONTROLLER

C8026LEG/802621GED2

1 2 3 4 5 6 7 8 9 10 11 12 13 14 15
1 0 3 2 8 7 . 9 0 2 1 9 2

RECORD DRAWING
Date FEB 1992
These drawings have been revised based on field data and every reasonable attempt has been made to depict construction as actually performed

AS BUILT INFORMATION
CONTRACTOR — DATE
WORK STAKED BY — DATE
INSPECTOR'S ACCEPTANCE BY — DATE
FIELD VERIFICATION BY — DATE
DRAWINGS CORRECTED BY — DATE
MICRO–FILM INFORMATION
RECORDED BY — DATE
NO.

BENCH MARKS

SURVEY INFORMATION
FIELD NOTES

NO.	BY	DATE

ENGINEER'S SEAL

NO.	DATE	SYMBOL REVISION	BY
1	2-92		

REMARKS
REVISIONS
DESIGN
DESIGNED BY D. DOZIER/H. LIVERMORE DATE NOV. 9, 1990
DRAWN BY P. SCHMITTLE
CHECKED BY B. GRIFFIS

CITY OF ALBUQUERQUE
PUBLIC WORKS DEPARTMENT
ENGINEERING GROUP

TITLE: GUTIERREZ PUMP STATION RECONSTRUCTION
ELECTRICAL LEGEND

APPROVALS	ENGINEER	DATE	APPROVALS	ENGINEER	DATE
DRC CHAIRMAN			WATER	R.W. Kane	11-13-90
TRANSPORTATION	N/A RWD	11-16-90	WASTE WATER	R.W. Kane	11-13-90
HYDROLOGY	LDM	11-15-90			

PROJECT NO. 3337.90 | MAP NO. F–22 | SHEET E1 OF 19

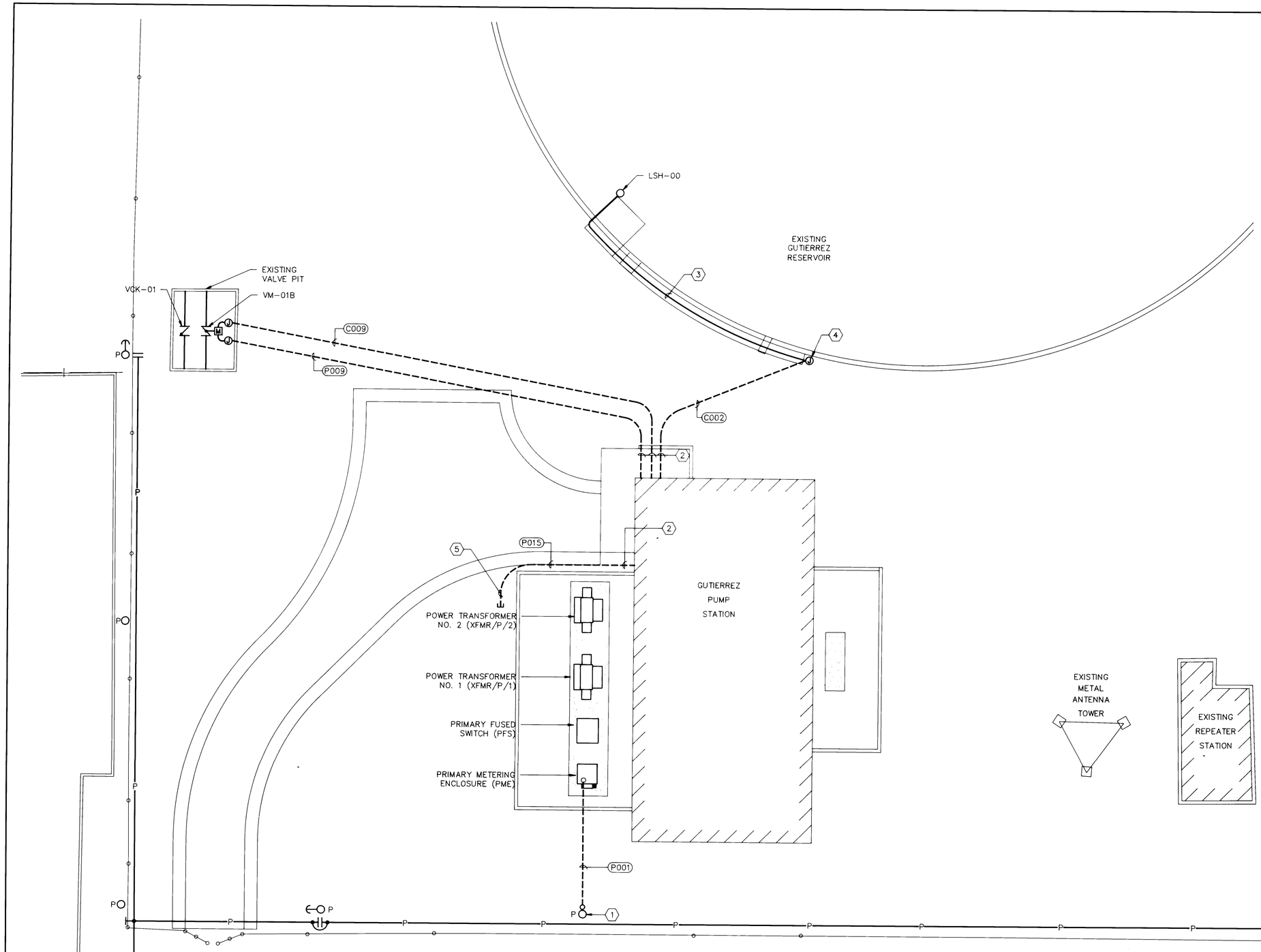

1/2 ELECTRICAL SITE PLAN (6)
SCALE: 1"=10'-0"

GENERAL NOTES

1 SEE SHEET E1 FOR SYMBOLS LEGEND AND ABBREVIATIONS LIST.

2 SEE SHEET E8 FOR SCHEDULES.

KEYED NOTES ⬡

1 INSTALL PRIMARY RISER ON NEW POLE IN ACCORDANCE WITH PUBLIC SERVICE CO. (PNM) DISTRIBUTION STANDARD DS-7-15.1. ROUTE CONDUIT TO PRIMARY METERING ENCLOSURE ON ELECTRICAL EQUIPMENT PAD. SEE ENLARGED PLAN ON SHEET E6. NEW POLE WILL BE INSTALLED BY PNM.

2 SEE SHEET E6 FOR CONTINUATION.

3 REMOVE CONDUCTOR FROM EXISTING CONDUIT. INSTALL NEW CONDUCTOR AS NOTED IN EXISTING CONDUIT.

4 INTERCEPT EXISTING CONDUIT AT THIS LOCATION AND INSTALL NEW J-BOX. ROUTE NEW CONDUIT AND CONDUCTOR FROM J-BOX TO NEW PUMP STATION AS SHOWN. REMOVE EXISTING CONDUIT AND CONDUCTOR FROM THIS LOCATION BACK TO EXISTING PUMP STATION.

5 STUB-OUT CONDUIT FOR IRRIGATION CONTROL WIRING.

6 SEE SHEET 5 FOR YARD PIPING AND OTHER UNDERGROUND UTILITIES, NEW AND EXISTING.

7 SEE SHEET 3 FOR ELECTRICAL DEMOLITION.

AS BUILT INFORMATION
CONTRACTOR
WORK STAKED BY — DATE
INSPECTOR ACCEPTANCE BY — DATE
FIELD VERIFICATION BY — DATE
DRAWINGS CORRECTED BY — DATE
MICRO-FILM INFORMATION
RECORDED BY — DATE
NO.

BENCH MARKS

SURVEY INFORMATION
FIELD NOTES

NO.	BY	DATE

ENGINEER'S SEAL

NO.	DATE	REMARKS	BY
		REVISIONS	

DESIGN
DESIGNED BY D. DOZIER
DATE NOV. 9, 1990
DRAWN BY S. HAUGLAND
CHECKED BY B. GRIFFIS

8026.21GED1/GUTSITE1

1 2 3 4 5 6 7 8 9 10 11 12
2 6 3 3 3 7 . 9 0 2 2 9 2

RECORD DRAWING
Date FEB 1992
These drawings have been prepared based on field data and every reasonable attempt has been made to display construction as actually performed

CITY OF ALBUQUERQUE
PUBLIC WORKS DEPARTMENT
ENGINEERING GROUP

TITLE: GUTIERREZ PUMP STATION RECONSTRUCTION
ELECTRICAL SITE PLAN

APPROVALS	ENGINEER	DATE	APPROVALS	ENGINEER	DATE
DRC CHAIRMAN	[illegible]	11/16/90	WATER	R.W. Kane	11-13-90
TRANSPORTATION	N/A RWD	11-16-90	WASTE WATER	R.W. Kane	11-13-90
HYDROLOGY	CDM	11-15-90			

PROJECT NO. 3337.90 | MAP NO. F-22 | SHEET E2 OF 19

GENERAL NOTES

1. SEE SHEET E1 FOR SYMBOLS LEGEND AND ABBREVIATIONS LIST
2. SEE SHEET E8 FOR SCHEDULES.

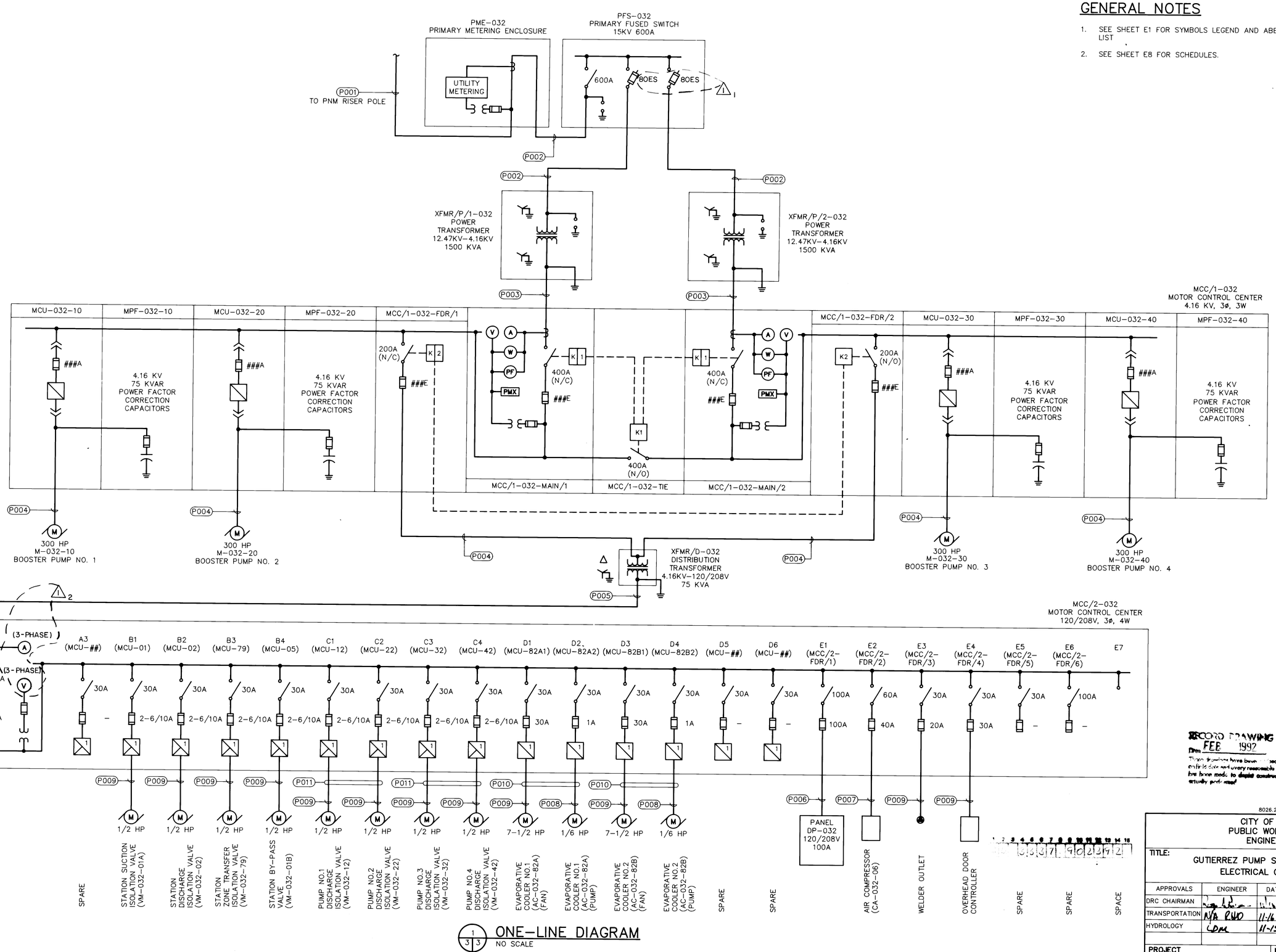

1/3 ONE-LINE DIAGRAM
NO SCALE

RECORD DRAWING
FEB 1992
These drawings have been prepared based on the best available data and every reasonable effort has been made to display construction as actually performed

8026.21GED1/G80260NE

AS BUILT INFORMATION

CONTRACTOR	
WORK STAKED BY	DATE
INSPECTOR'S ACCEPTANCE BY	DATE
FIELD VERIFICATION BY	DATE
DRAWINGS CORRECTED BY	DATE
MICRO-FILM INFORMATION	
RECORDED BY	DATE
NO.	

BENCH MARKS

SURVEY INFORMATION

FIELD NOTES

NO.	BY	DATE

ENGINEER'S SEAL

NO.	DATE	REMARKS	BY
2	2-92	REVISIONS	

DESIGN

DESIGNED BY D. DOZIER
DRAWN BY P. STRINEL
CHECKED BY B. GRIFFIS
DATE NOV. 9, 1990

CITY OF ALBUQUERQUE
PUBLIC WORKS DEPARTMENT
ENGINEERING GROUP

TITLE: GUTIERREZ PUMP STATION RECONSTRUCTIONS
ELECTRICAL ONE-LINE DIAGRAMS

APPROVALS	ENGINEER	DATE	APPROVALS	ENGINEER	DATE
DRC CHAIRMAN	[illegible]	[illegible]	WATER	R.W. Kane	11-13-90
TRANSPORTATION	N/A RWD	11-16-90	WASTE WATER	R.W. Kane	11-13-90
HYDROLOGY	LDM	11-15-90			

PROJECT NO. 3337.90 | MAP NO. F-22 | SHEET E3 OF 19

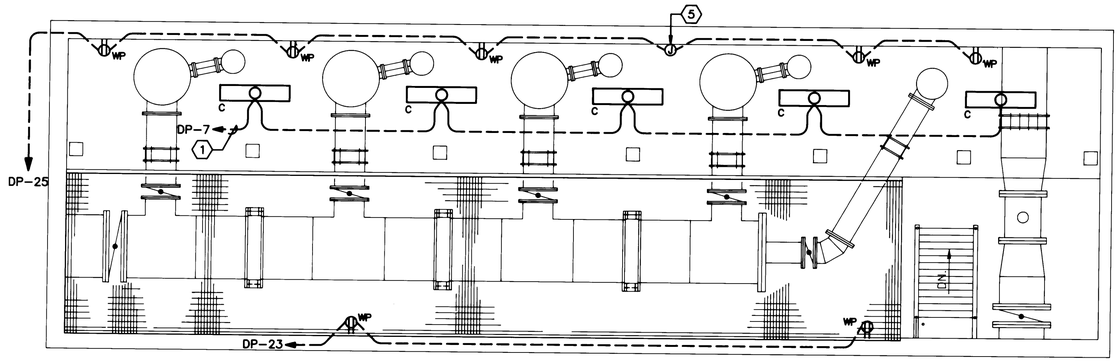

2 / 4 4 SUCTION PIT LIGHTING/RECEPTACLE PLAN
SCALE 1/4"=1'-0"

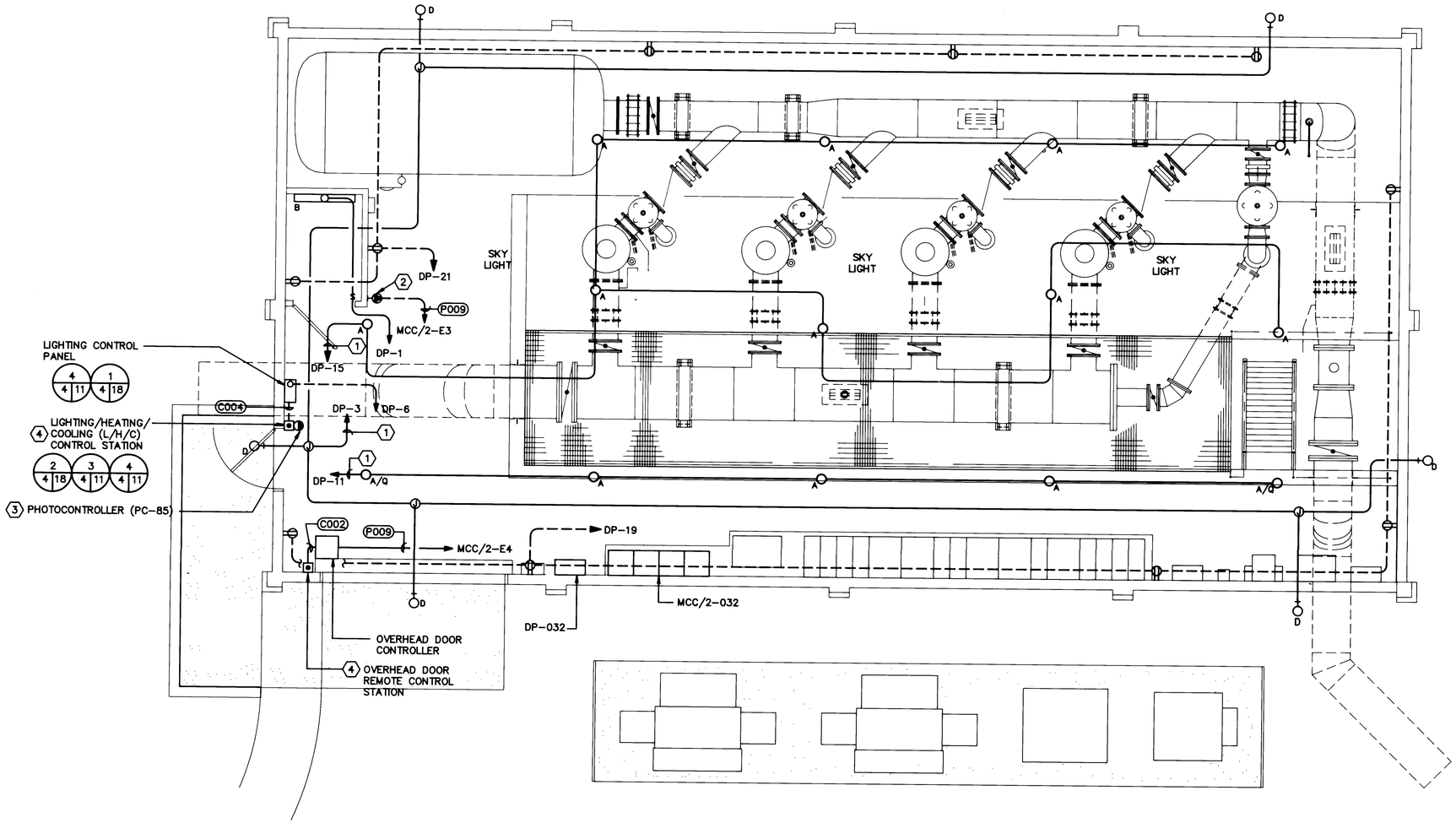

1 / 4 4 LIGHTING/RECEPTACLE PLAN
SCALE: 1/4"=1'-0"

GENERAL NOTES

1 SEE SHEET E1 FOR SYMBOLS LEGEND AND ABBREVIATIONS LIST.

2 SEE SHEET E8 FOR SCHEDULES.

3 INSTALL LIGHTING AND RECEPTACLE CIRCUIT CONDUIT CONCEALED WITHIN THE CMU BLOCK WALL, EXCEPT AT PANELBOARD DP-032, WHERE THE CONDUIT SHALL BE SURFACE MOUNTED.

4 USE FLUSH MOUNTED OUTLET BOXES FOR THE INSTALLATION OF RECEPTACLES, WALL SWITCHES, AND WALL MOUNTED LIGHT FIXTURES. ATTACH TO CONDUIT CONCEALED WITHIN THE CMU BLOCK WALL.

5 COORDINATE EXACT LOCATION OF PENDANT MOUNTED FLUORESCENT LIGHT FIXTURES TO AVOID CONFLICTS WITH MECHANICAL DUCTWORK AND EQUIPMENT.

6 PROVIDE NUMBER OF PHASE AND NEUTRAL CONDUCTORS REQUIRED TO IMPLEMENT CIRCUITING SHOWN ON PLAN.

7 BELOW GRADE CONDUIT ROUTING SHOWN PARALLEL TO BUILDING LINES FOR DRAWING CLARITY ONLY. ROUTE BELOW GRADE CONDUIT FROM POINT-TO-POINT IN A STRAIGHT LINE. PROVIDE ADDITIONAL BENDS ONLY WHEN NECESSARY TO AVOID BELOW GRADE PIPING, STRUCTURAL ELEMENTS, OR OTHER CONDUIT. ROUTE CONDUIT SHOWN INSTALLED ON UNDERSIDE OF SUCTION PIT CANTILEVERED FLOOR EXPOSED AND PARALLEL TO BUILDING LINES.

KEYED NOTES

1 ROUTE HOME RUN CIRCUIT THROUGH LIGHTING CONTACTORS IN LIGHTING CONTROL PANEL IN ACCORDANCE WITH THE SCHEMATIC SHOWN ON SHEET E11.

2 NEMA L15-20R, 20A, 3-POLE, 4-WIRE, 250V TWIST LOCK RECEPTACLE.

3 MOUNT PHOTOCONTROLLER ON TYPE "C" CONDULET FITTING 1'-0" ABOVE PARAPET WALL. FACE PHOTOSENSOR TO THE NORTH. ROUTE CONDUIT/CONDUCTOR TO CONTROL STATION BELOW.

4 MOUNT 4'-0" ABOVE FINISH FLOOR TO CENTERLINE OF CONTROL STATION.

5 SURFACE MOUNT JUNCTION BOX. PROVIDE ADDITIONAL HUB FOR CORD CONNECTOR.

AS BUILT INFORMATION
CONTRACTOR
WORK STAKED BY DATE
INSPECTOR'S ACCEPTANCE BY DATE
VERIFICATION BY DATE
DRAWINGS CORRECTED BY DATE
MICRO-FILM INFORMATION
RECORDED BY DATE
NO.

BENCH MARKS

SURVEY INFORMATION
FIELD NOTES
NO. BY DATE

ENGINEER'S SEAL
NEW MEXICO REGISTERED

NO.	DATE	REMARKS	BY
		REVISIONS	

DESIGN
DESIGNED BY D. DOZIER DATE NOV. 9, 1990
DRAWN BY P. STRINEL
CHECKED BY B. GRIFFIS

802621GED2/G8026LTG

CITY OF ALBUQUERQUE
PUBLIC WORKS DEPARTMENT
ENGINEERING GROUP

TITLE: GUTIERREZ PUMP STATION RECONSTRUCTION
LIGHTING/RECEPTACLE PLAN

APPROVALS	ENGINEER	DATE	APPROVALS	ENGINEER	DATE
DRC CHAIRMAN		11/16/90	WATER	R.W. Kane	11-13-90
TRANSPORTATION	N/A RHD	11-16-90	WASTE WATER	R.W. Kane	11-13-90
HYDROLOGY	LDM	11-15-90			

RECORD DRAWING
Date FEB 1992
These drawings have been revised based on field data and every reasonable attempt has been made to depict construction as actually performed

PROJECT NO. 3337.90 | MAP NO. F-22 | SHEET E4 OF 19

GENERAL NOTES

1. SEE SHEET E-1 FOR SYMBOLS LEGEND AND ABBREVIATIONS LIST.
2. SEE SHEET E-8 FOR SCHEDULES.
3. REPLACE "##" AND "#-#" WITH ACTUAL TERMINAL ASSIGNMENTS BASED ON MANUFACTURERS SHOP DRAWINGS (TYPICAL).

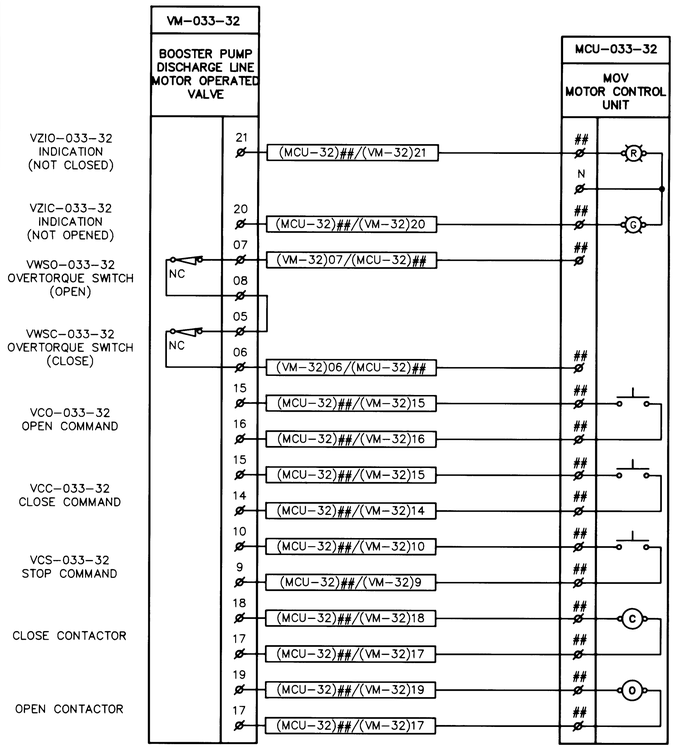

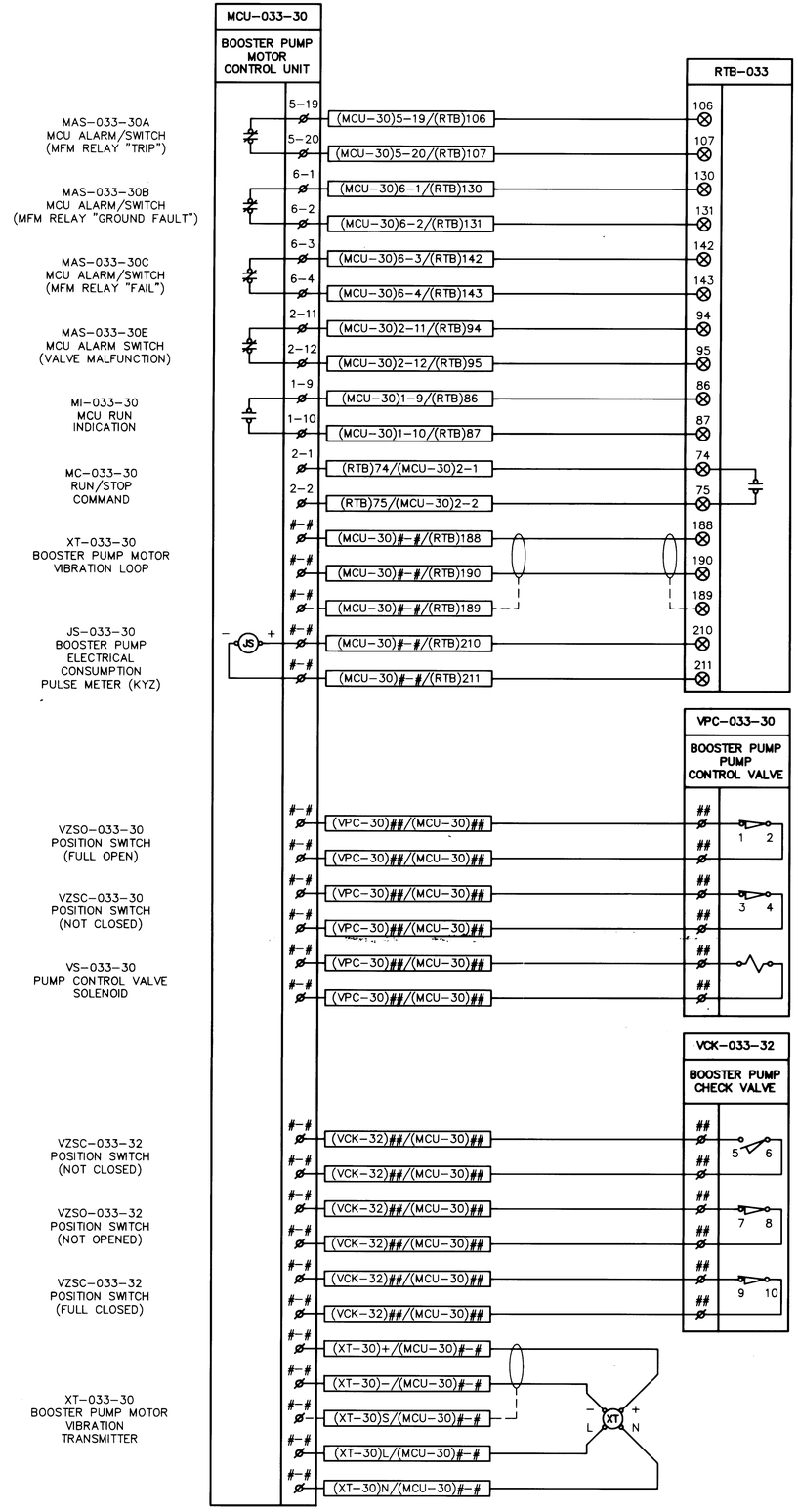

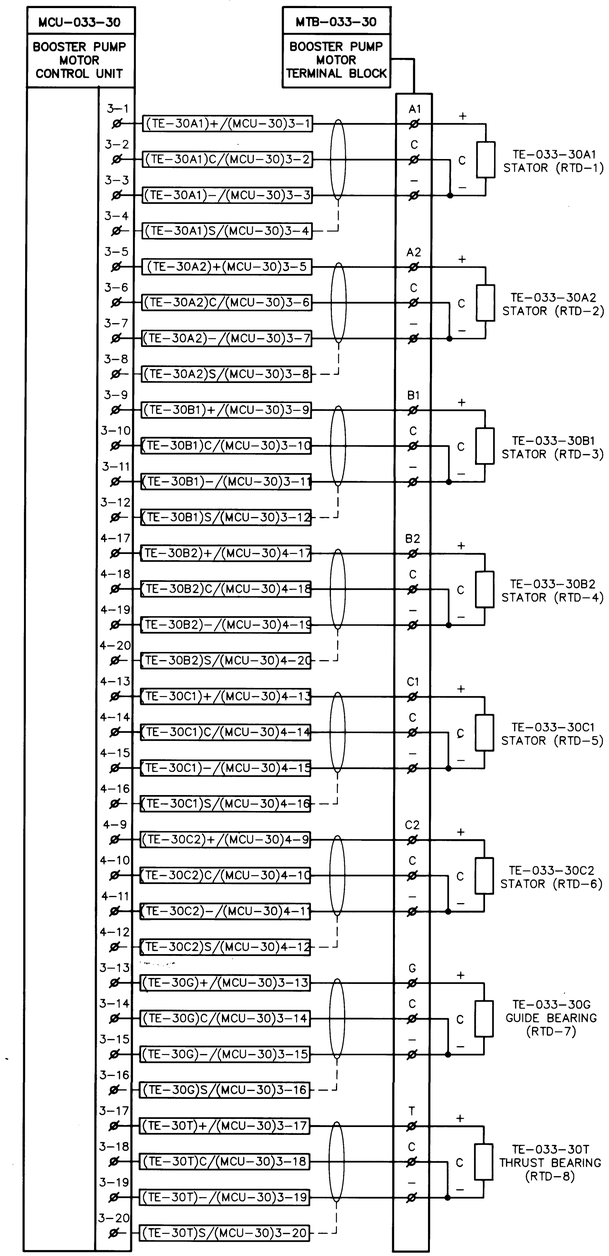

G8026E16/8026.21GED2

26 3337.904092

THIS SHEET SUPERSEDED BY SIMILAR SHEET MARKED "REDRAWN FOR RECORD PURPOSES"

AS BUILT INFORMATION

CONTRACTOR		
WORK STAKED BY	DATE	
INSPECTOR'S ACCEPTANCE BY	DATE	
FIELD VERIFICATION BY	DATE	
DRAWINGS CORRECTED BY	DATE	

MICRO-FILM INFORMATION

RECORDED BY	DATE
NO.	

BENCH MARKS

SURVEY INFORMATION

NO.	BY	DATE
FIELD NOTES		

ENGINEER'S SEAL

NEW MEXICO REGISTERED PROFESSIONAL ENGINEER 5985

11-8-90

NO.	DATE	REMARKS	BY
		REVISIONS	

DESIGNED BY D. DOZIER/H. LIVERMORE DATE NOV. 9, 1990
DRAWN BY P. STRINEL
CHECKED BY B. GRIFFIS

CITY OF ALBUQUERQUE
PUBLIC WORKS DEPARTMENT
ENGINEERING GROUP

TITLE: GUTIERREZ PUMP STATION RECONSTRUCTION
INTERCONNECTION DIAGRAMS – PUMP NO. 3

APPROVALS	ENGINEER	DATE	APPROVALS	ENGINEER	DATE
DRC CHAIRMAN	Roger Nelson	11/16/90	WATER	R.W. Kane	11-13-90
TRANSPORTATION	N/A RWD	11-16-90	WASTE WATER	R.W. Kane	11-13-90
HYDROLOGY	LDM	11-15-90			

PROJECT NO. 3337.90 | MAP NO. F-22 | SHEET E14 OF 19

GENERAL NOTES

1. SEE SHEET E-1 FOR SYMBOLS LEGEND AND ABBREVIATIONS LIST.
2. SEE SHEET E-8 FOR SCHEDULES.
3. REPLACE "##" AND "#-#" WITH ACTUAL TERMINAL ASSIGNMENTS BASED ON MANUFACTURERS SHOP DRAWINGS (TYPICAL).

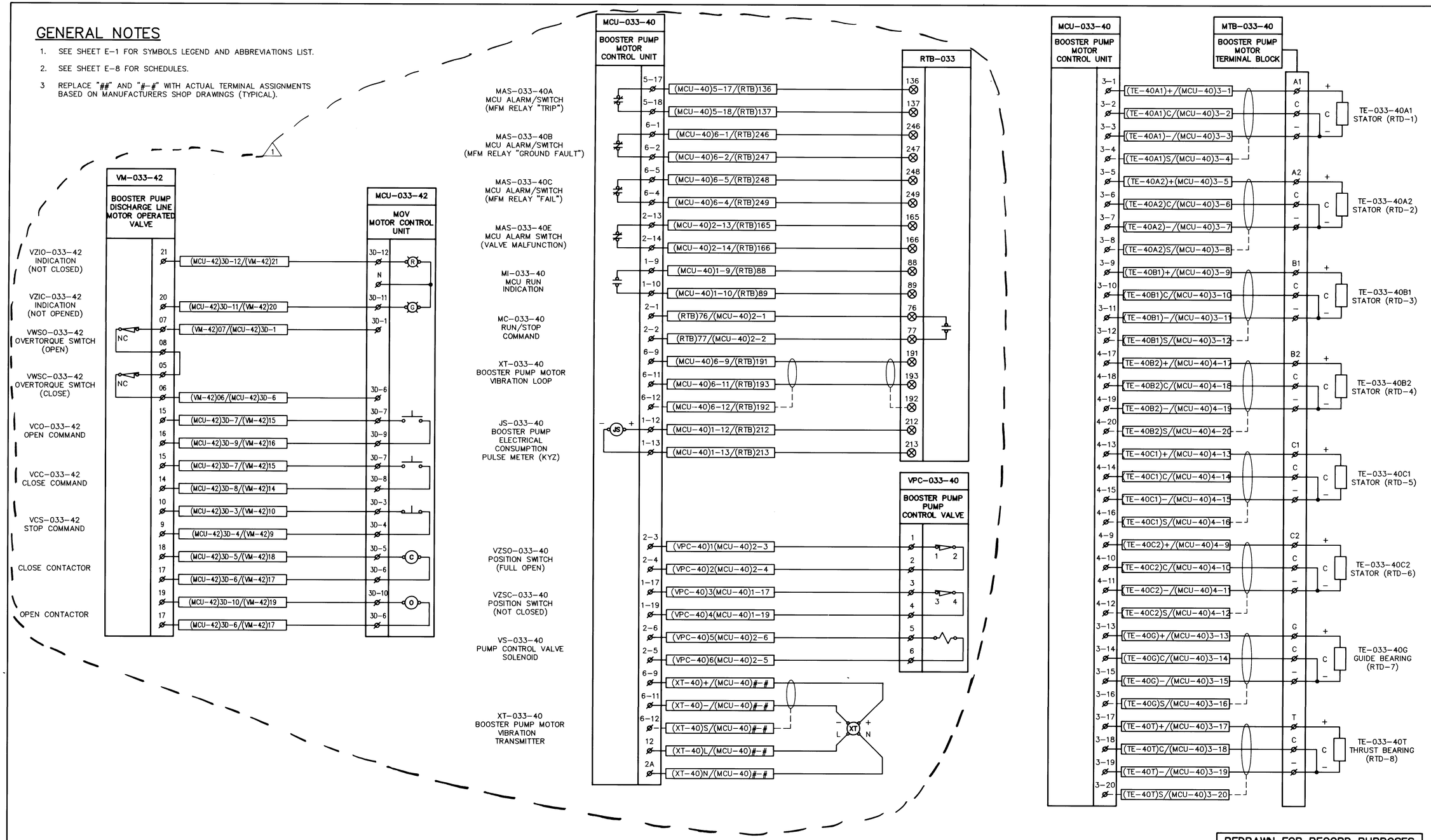

REDRAWN FOR RECORD PURPOSES

G8026E17/802621GED2

26 3337.904192

RECORD DRAWING
Date FEB 1992
These drawings have been revised based on field data and every reasonable attempt has been made to depict construction as actually performed

AS BUILT INFORMATION

CONTRACTOR	MCC		
STAKED BY	ALB. SVY.	DATE 2/92	
INSPECTOR'S ACCEPTANCE BY	LH	DATE 12/19/91	
FIELD VERIFICATION BY	LH	DATE 12/91	
DRAWING CORRECTED BY	LH	DATE 2/92	
MICRO-FILM INFORMATION			
RECORDED BY		DATE	
NO.			

BENCH MARKS

SURVEY INFORMATION

NO.	BY	DATE
FIELD NOTES		

ENGINEER'S SEAL

NO.	DATE	REMARKS	BY
1	2-92	NUMBERING REVISIONS	LH

REVISIONS

DESIGNED BY D. DOZIER/H. LIVERMORE DATE NOV. 9, 1990
DRAWN BY P. STRINEL
CHECKED BY B. GRIFFIS

CITY OF ALBUQUERQUE
PUBLIC WORKS DEPARTMENT
ENGINEERING GROUP

TITLE: GUTIERREZ PUMP STATION RECONSTRUCTION
INTERCONNECTION DIAGRAMS – PUMP NO. 4

APPROVALS	ENGINEER	DATE	APPROVALS	ENGINEER	DATE
DRC CHAIRMAN			WATER		
TRANSPORTATION			WASTE WATER		
HYDROLOGY					

PROJECT NO. 3337.90 | MAP NO. F-22 | SHEET E15 OF 19

GENERAL NOTES

1. SEE SHEET E-1 FOR SYMBOLS LEGEND AND ABBREVIATIONS LIST.
2. SEE SHEET E-8 FOR SCHEDULES.
3. REPLACE "##" AND "#-#" WITH ACTUAL TERMINAL ASSIGNMENTS BASED ON MANUFACTURERS SHOP DRAWINGS (TYPICAL).

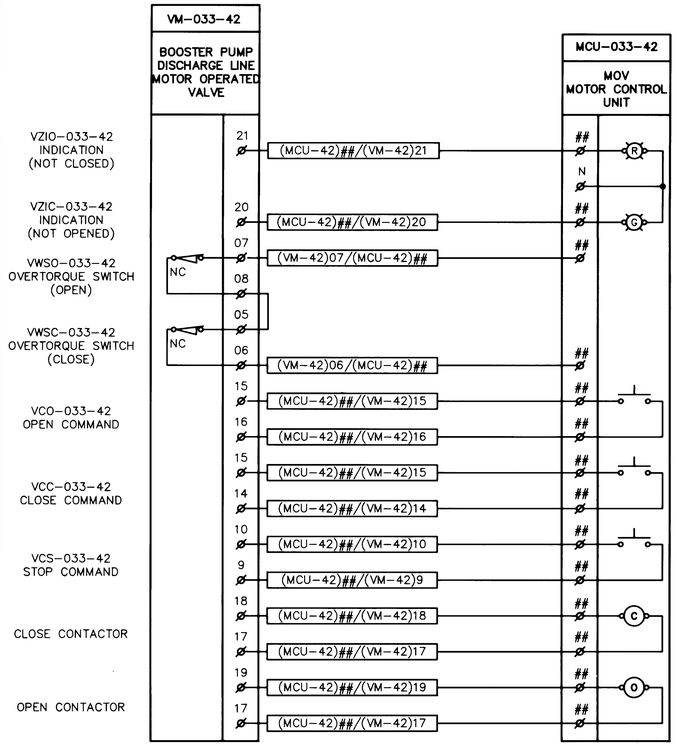

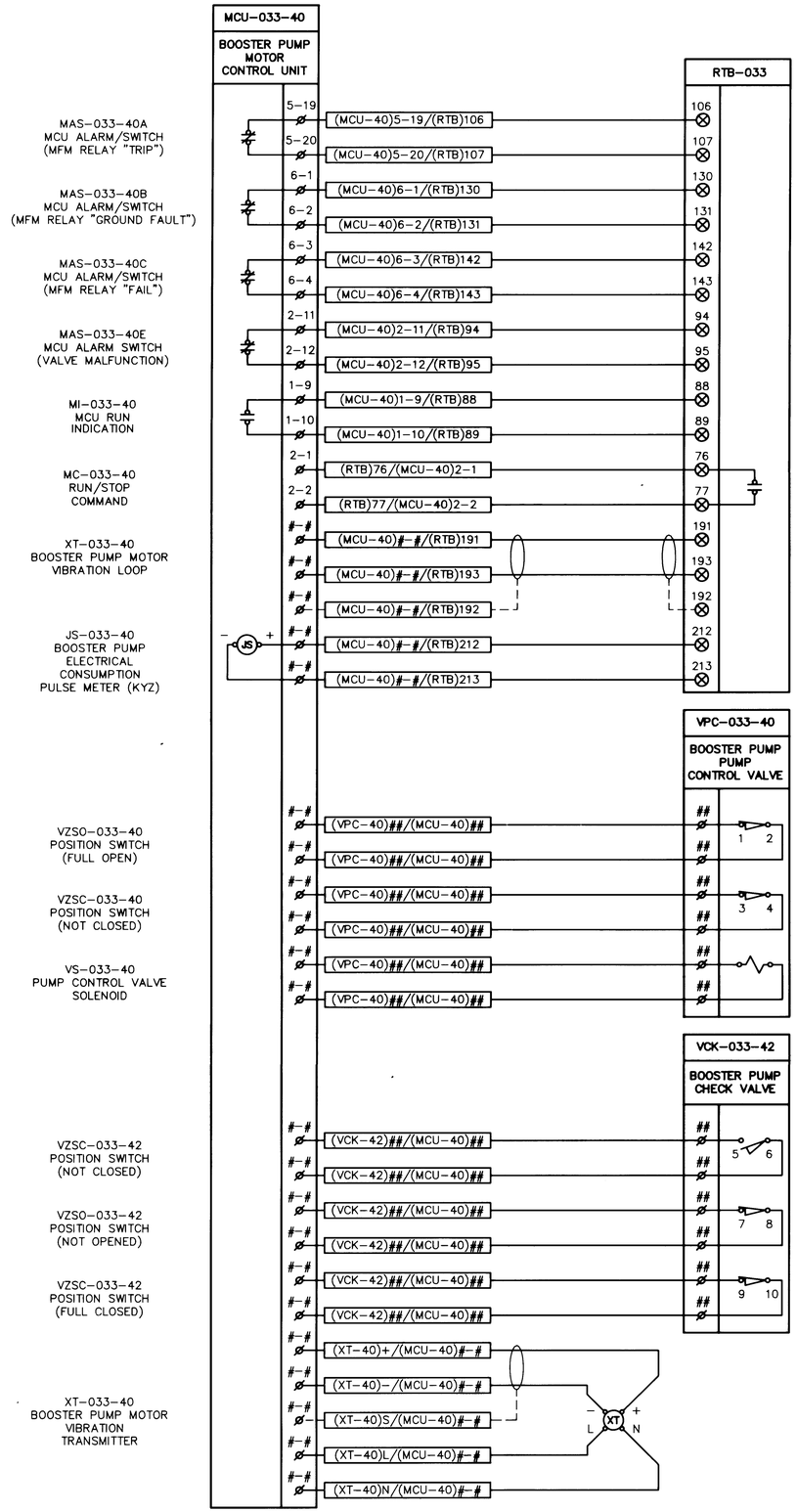

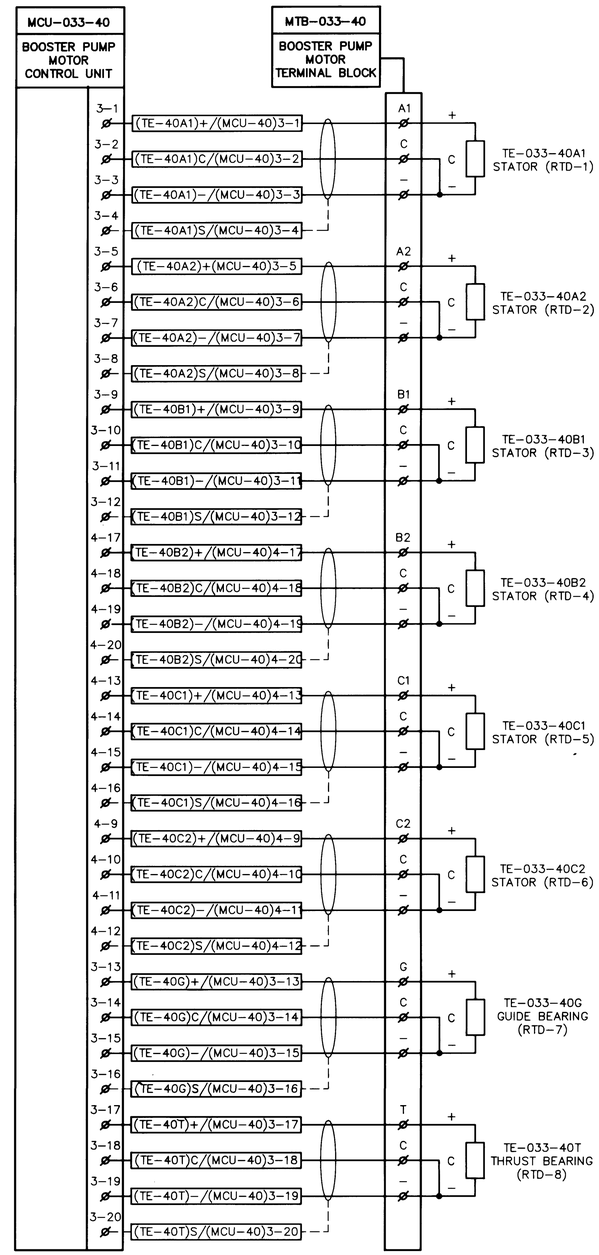

G8026E17/802621GED2

26 3337.904292

THIS SHEET SUPERSEDED BY SIMILAR SHEET MARKED "REDRAWN FOR RECORD PURPOSES"

AS BUILT INFORMATION

CONTRACTOR | DATE
WORK STAKED BY | DATE
INSPECTOR'S ACCEPTANCE BY | DATE
FIELD VERIFICATION BY | DATE
DRAWINGS CORRECTED BY | DATE
MICRO-FILM INFORMATION
RECORDED BY | DATE
NO.

BENCH MARKS

SURVEY INFORMATION
FIELD NOTES

NO.	BY	DATE

ENGINEER'S SEAL

NO.	DATE	REMARKS	BY
		REVISIONS	

DESIGN
DESIGNED BY D. DOZIER/H. LIVERMORE DATE NOV. 9, 1990
DRAWN BY P. STRINEL
CHECKED BY B. GRIFFIS

CITY OF ALBUQUERQUE
PUBLIC WORKS DEPARTMENT
ENGINEERING GROUP

TITLE: GUTIERREZ PUMP STATION RECONSTRUCTION
INTERCONNECTION DIAGRAMS – PUMP NO. 4

APPROVALS	ENGINEER	DATE	APPROVALS	ENGINEER	DATE
DRC CHAIRMAN	[illegible]	11/16/90	WATER	RW Kane	11-13-90
TRANSPORTATION	N/A RHO	11-16-90	WASTE WATER	RW Kane	11-13-90
HYDROLOGY	LDM	11-15-90			

PROJECT NO. 3337.90 | MAP NO. F-22 | SHEET E15 OF 19

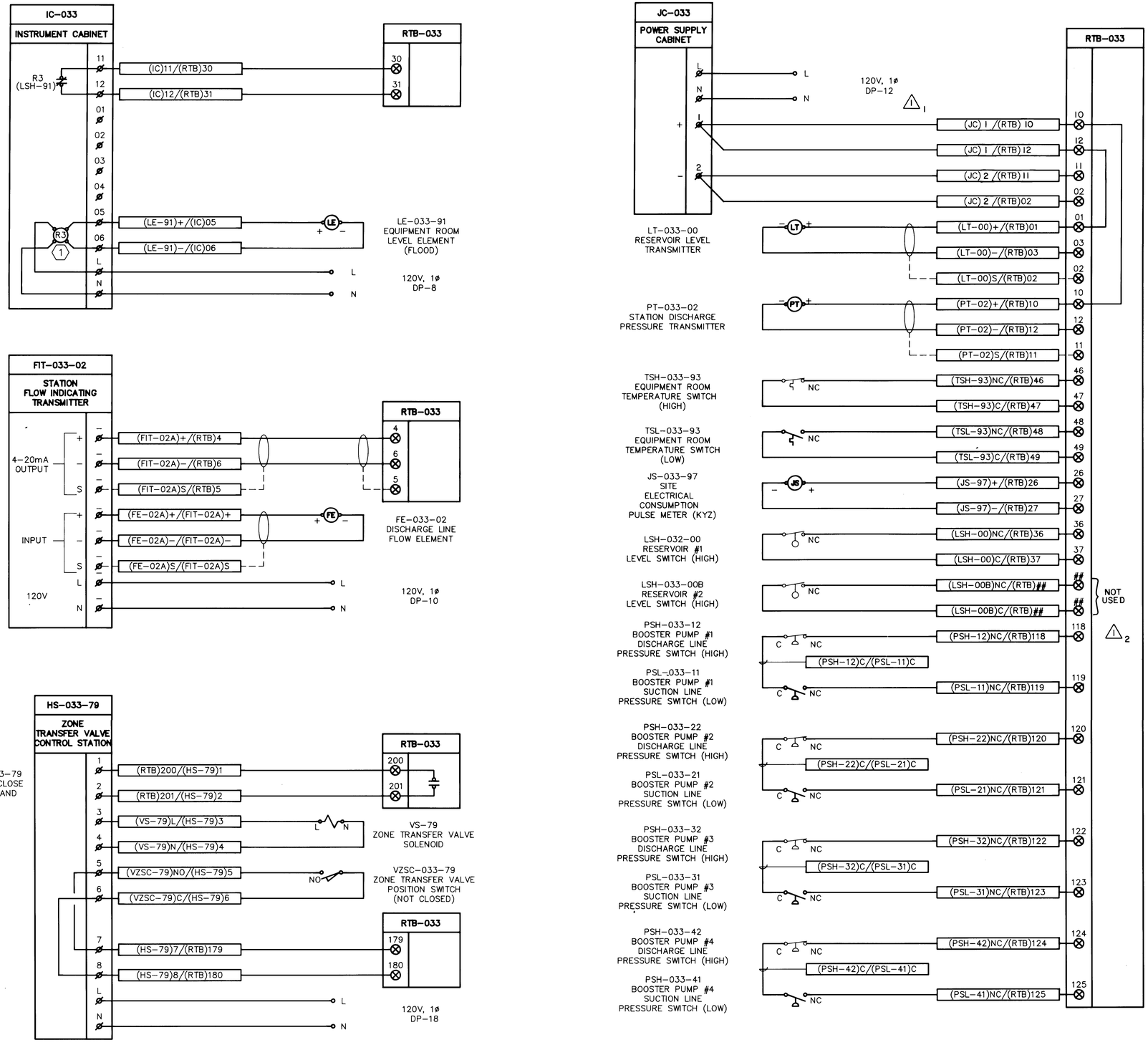

GENERAL NOTES

1. SEE SHEET E1 FOR SYMBOLS LEGEND AND ABBREVIATIONS LIST.
2. SEE SHEET E8 FOR SCHEDULES.
3. REPLACE "##" AND "#-#" WITH ACTUAL TERMINAL ASSIGNMENTS BASED ON MANUFACTURERS DRAWINGS (TYPICAL).

KEYED NOTES ⬡

1 B/W CONTROLS INC. RELAY. SEE SECTION 13311 OF THE SPECIFICATIONS.

2.6 3337.904392

RECORD DRAWING
Date FEB 1992
These drawings have been revised based on field data and every reasonable attempt has been made to depict construction as actually performed

AS BUILT INFORMATION
CONTRACTOR
WORK STAKED BY — DATE
INSPECTOR ACCEPTANCE — DATE
FIELD VERIFICATION BY — DATE
DRAWINGS CORRECTED BY — DATE
MICRO-FILM INFORMATION
RECORDED BY — DATE
NO.

BENCH MARKS

SURVEY INFORMATION
FIELD NOTES
NO. | BY | DATE

ENGINEER'S SEAL
NEW MEXICO REGISTERED 9985 ALAN L. MUTH
11-13-90

NO.	DATE	REMARKS	BY
2	2-92	REVISIONS	
		DESIGN	

DESIGNED BY D. DOZIER/H. LIVERMORE DATE NOV. 9, 1990
DRAWN BY T. LAKE
CHECKED BY G. GRIFFIS

802621GED1/G8026ID1

CITY OF ALBUQUERQUE
PUBLIC WORKS DEPARTMENT
ENGINEERING GROUP

TITLE: GUTIERREZ PUMP STATION RECONSTRUCTION
INTERCONNECTION DIAGRAMS – MISC.

APPROVALS	ENGINEER	DATE	APPROVALS	ENGINEER	DATE
DRC CHAIRMAN	[illegible]	11/16/90	WATER	R.W. Kane	11-13-90
TRANSPORTATION	N/A RHD	11-16-90	WASTE WATER	R.W. Kane	11-13-90
HYDROLOGY	LDM	11-15-90			

PROJECT NO. 3337.90 | MAP NO. F-22 | SHEET E16 OF 19

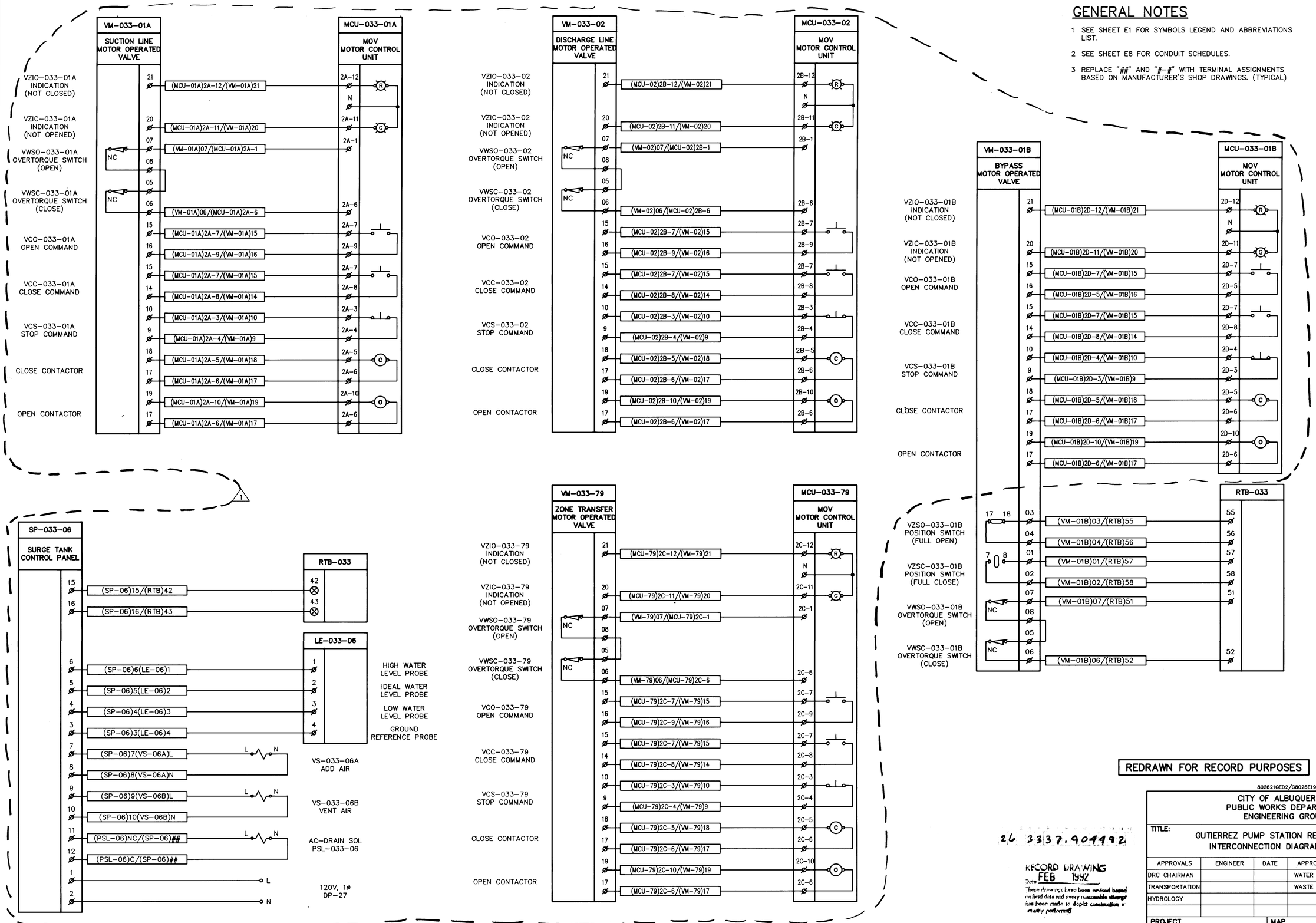

GENERAL NOTES

1 SEE SHEET E1 FOR SYMBOLS LEGEND AND ABBREVIATIONS LIST.

2 SEE SHEET E8 FOR CONDUIT SCHEDULES.

3 REPLACE "##" AND "#-#" WITH TERMINAL ASSIGNMENTS BASED ON MANUFACTURER'S SHOP DRAWINGS. (TYPICAL)

REDRAWN FOR RECORD PURPOSES

8026210ED2/G8025E19

26 3337.904992

RECORD DRAWING
Date FEB 1992
These drawings have been revised based on field data and every reasonable attempt has been made to depict construction as actually performed

AS BUILT INFORMATION

CONTRACTOR	MCC	
WORK STAKED BY	ALB. SVY.	DATE 2/92
INSPECTOR'S ACCEPTANCE BY	LH	DATE 12/19/91
FIELD VERIFICATION BY	LH	DATE 12/91
DRAWINGS CORRECTED BY	LH	DATE 2/92

MICRO-FILM INFORMATION

RECORDED BY DATE

NO.

BENCH MARKS

SURVEY INFORMATION

NO.	FIELD NOTES BY	DATE

ENGINEER'S SEAL

NO.	DATE	REMARKS	BY
1	2-92	NUMBERING REVISION	LH

REVISIONS

DESIGN

DESIGNED BY D. DOZIER/H. LIVERMORE DATE NOV. 9, 1990
DRAWN BY S. HAUGLAND
CHECKED BY B. GRIFFIS

CITY OF ALBUQUERQUE
PUBLIC WORKS DEPARTMENT
ENGINEERING GROUP

TITLE: GUTIERREZ PUMP STATION RECONSTRUCTION
INTERCONNECTION DIAGRAMS – MISC.

APPROVALS	ENGINEER	DATE	APPROVALS	ENGINEER	DATE
DRC CHAIRMAN			WATER		
TRANSPORTATION			WASTE WATER		
HYDROLOGY					

PROJECT NO. 3337.90 MAP NO. F-22 SHEET E17 OF 19

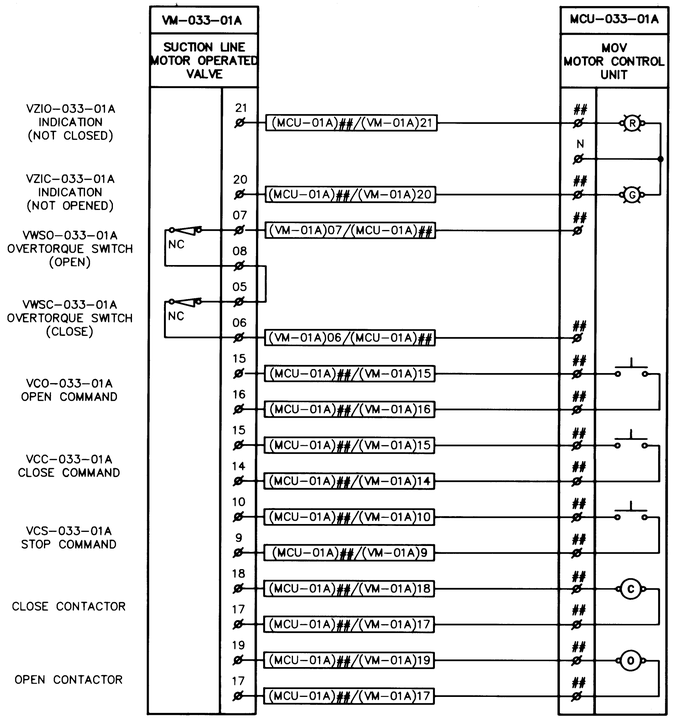

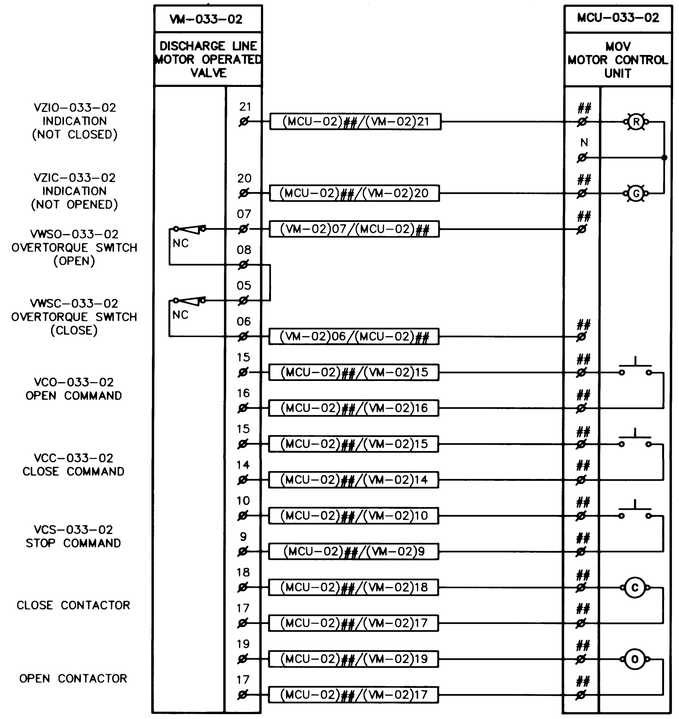

GENERAL NOTES

1 SEE SHEET E1 FOR SYMBOLS LEGEND AND ABBREVIATIONS LIST.

2 SEE SHEET E8 FOR CONDUIT SCHEDULES.

3 REPLACE "##" AND "#-#" WITH TERMINAL ASSIGNMENTS BASED ON MANUFACTURER'S SHOP DRAWINGS. (TYPICAL)

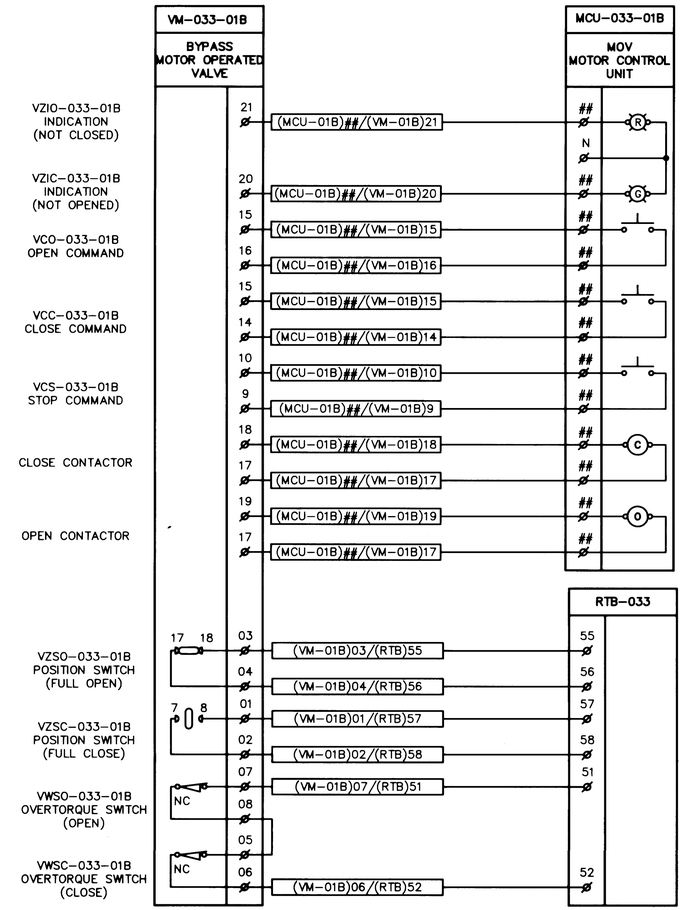

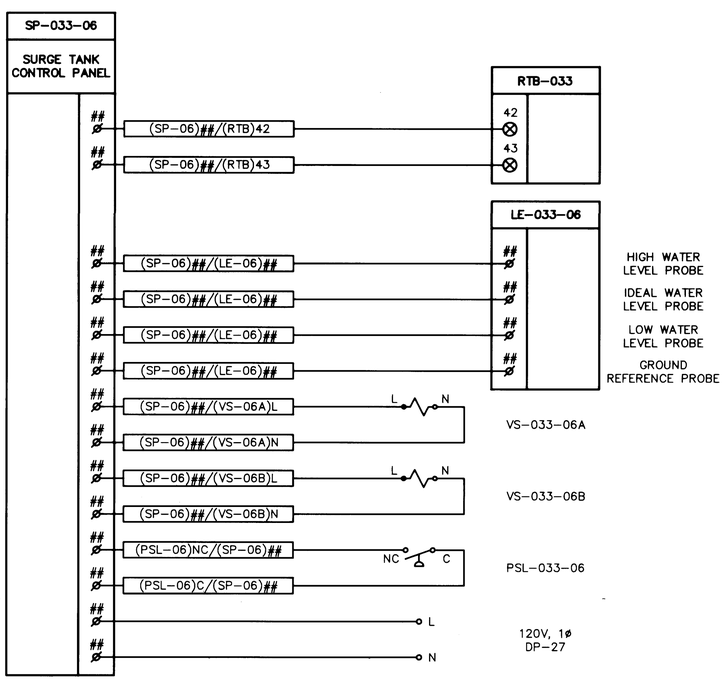

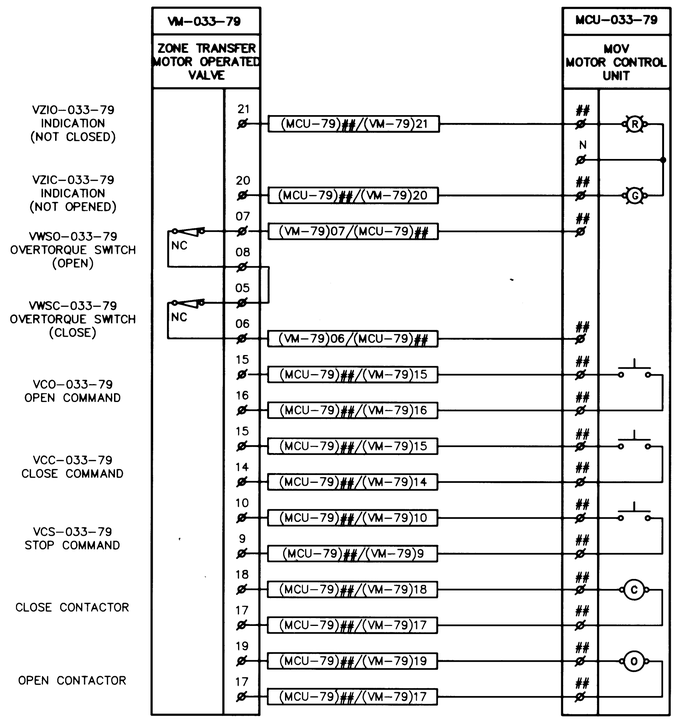

THIS SHEET SUPERSEDED BY SIMILAR SHEET MARKED "REDRAWN FOR RECORD PURPOSES"

AS BUILT INFORMATION

CONTRACTOR | DATE
SURVEY STAKED BY | DATE
INSPECTOR'S ACCEPTANCE BY | DATE
FIELD VERIFICATION BY | DATE
DRAWINGS CORRECTED BY | DATE

MICRO-FILM INFORMATION

RECORDED BY | DATE
NO.

BENCH MARKS

SURVEY INFORMATION

FIELD NOTES

NO.	BY	DATE

ENGINEER'S SEAL

NEW MEXICO REGISTERED 9983

NO.	DATE	REMARKS	BY
		REVISIONS	

DESIGN

DESIGNED BY D. DOZIER/H. LIVERMORE DATE NOV. 9, 1990
DRAWN BY S. HAUGLAND
CHECKED BY B. GRIFFIS

8026216ED2/G8026E19

CITY OF ALBUQUERQUE
PUBLIC WORKS DEPARTMENT
ENGINEERING GROUP

TITLE: GUTIERREZ PUMP STATION RECONSTRUCTION
INTERCONNECTION DIAGRAMS – MISC.

APPROVALS	ENGINEER	DATE	APPROVALS	ENGINEER	DATE
DRC CHAIRMAN	[illegible]	11/16/90	WATER	R.W. Kane	11-13-90
TRANSPORTATION	N/A [illegible]	11-16-90	WASTE WATER	R.W. Kane	11-13-90
HYDROLOGY	[illegible]	11-15-90			

PROJECT NO. 3337.90 | MAP NO. F-22 | SHEET E17 OF 19

26 3337.90 45 72

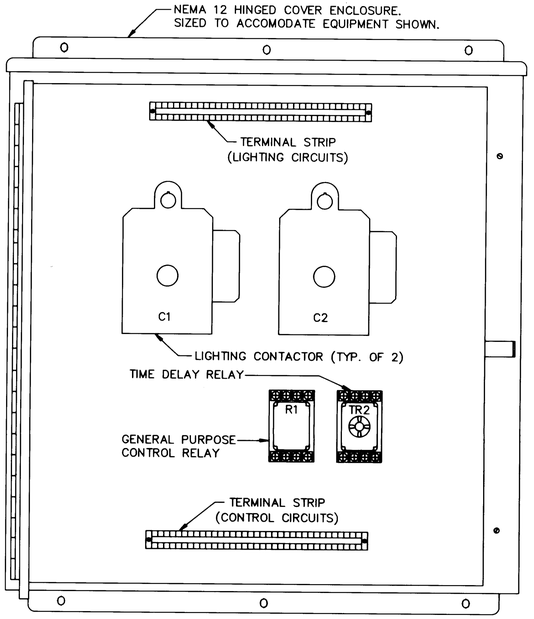

INTERIOR

1/4 18 LIGHTING CONTROL PANEL DETAIL
NOT TO SCALE

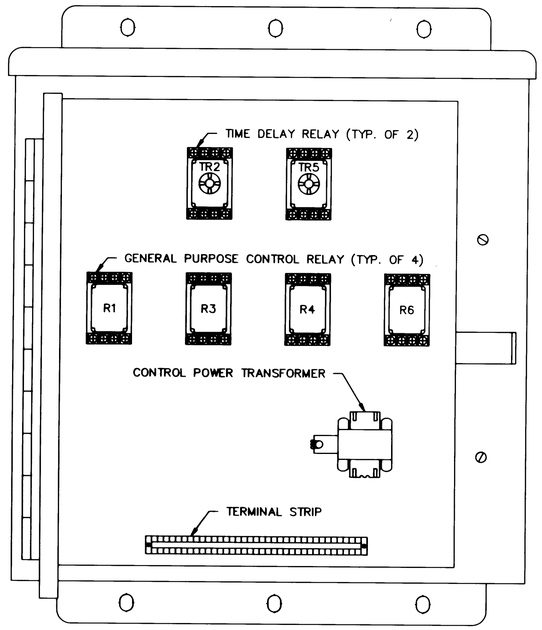

INTERIOR

GENERAL NOTES

1 SEE SHEET E1 FOR SYMBOLS LEGEND AND ABBREVIATIONS LIST.

2 SEE SHEET E8 FOR SCHEDULES.

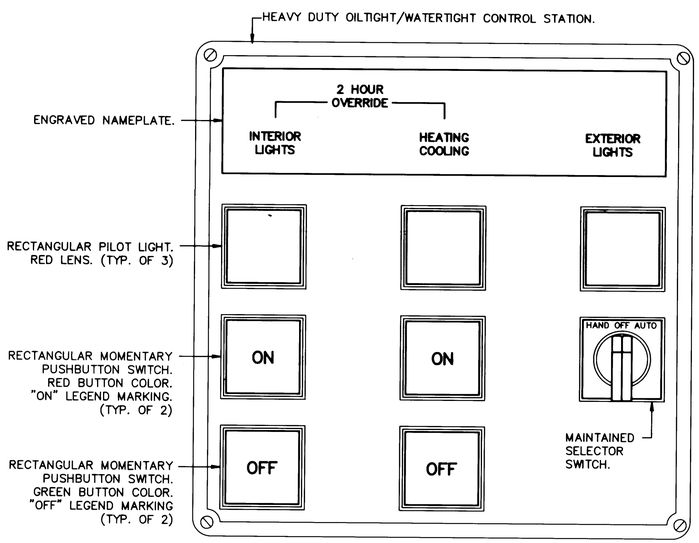

2/4 18/5 LIGHTING/HEATING/COOLING (H/C) CONTROL STATION DETAIL
NOT TO SCALE

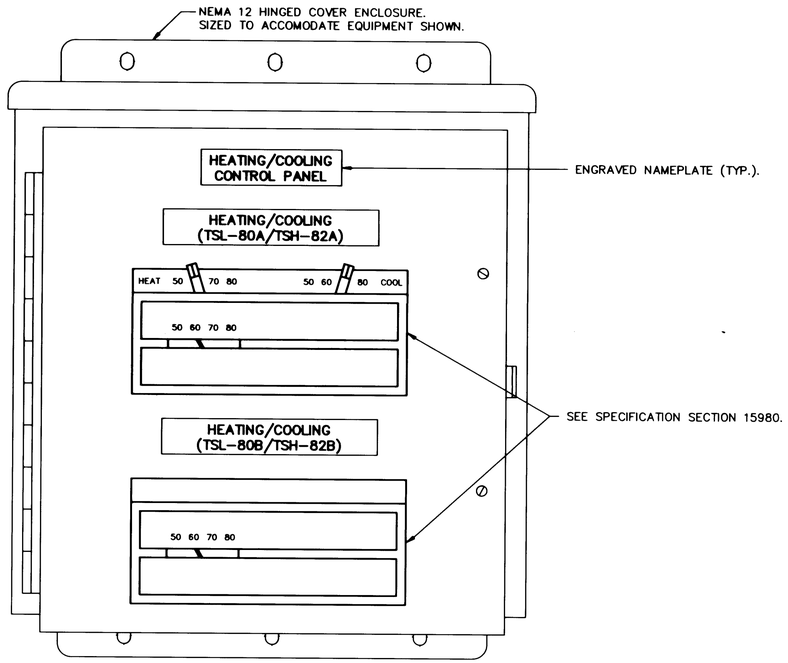

FRONT

3/5 18 HEATING/COOLING (H/C) CONTROL PANEL DETAIL
NOT TO SCALE

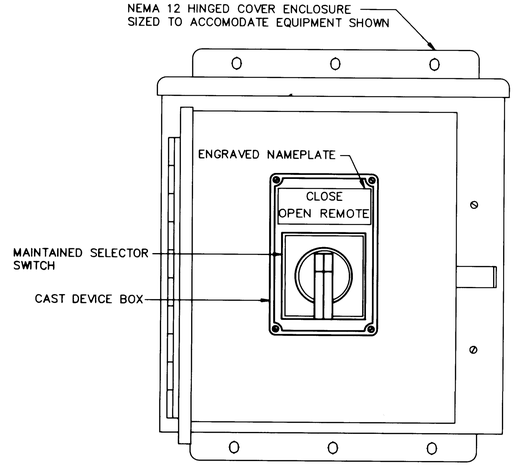

INTERIOR

4/6 18 ZONE TRANSFER VALVE CONTROL STATION DETAIL
NOT TO SCALE

2 6 3 3 3 7 . 9 0 9 6 9 2

RECORD DRAWING
Date FEB 1997
These drawings have been revised based on field data and every reasonable attempt has been made to depict construction as actually performed

AS BUILT INFORMATION
CONTRACTOR
WORK STAKED BY — DATE
INSPECTOR'S ACCEPTANCE BY — DATE
FIELD VERIFICATION BY — DATE
DRAWINGS CORRECTED BY — DATE
MICRO-FILM INFORMATION
RECORDED BY — DATE
NO.

BENCH MARKS

SURVEY INFORMATION
FIELD NOTES
NO. | BY | DATE

ENGINEER'S SEAL

NO.	DATE	REMARKS	BY
		REVISIONS	

DESIGNED BY D. DOZIER — DESIGN
DRAWN BY P. STRINEL — DATE NOV. 9, 1990
CHECKED BY B. GRIFFITS

8026210ED2/GDETE20

CITY OF ALBUQUERQUE
PUBLIC WORKS DEPARTMENT
ENGINEERING GROUP

TITLE: GUTIERREZ PUMP STATION RECONSTRUCTION DETAILS

APPROVALS	ENGINEER	DATE	APPROVALS	ENGINEER	DATE
DRC CHAIRMAN	Roger Schoen	11/16/90	WATER	R.W. Kane	11-13-90
TRANSPORTATION	N/A RHD	11-16-90	WASTE WATER	R.W. Kane	11-13-90
HYDROLOGY	Dm	11-15-90			

PROJECT NO. 3337.90 | MAP NO. F-22 | SHEET E18 OF 19

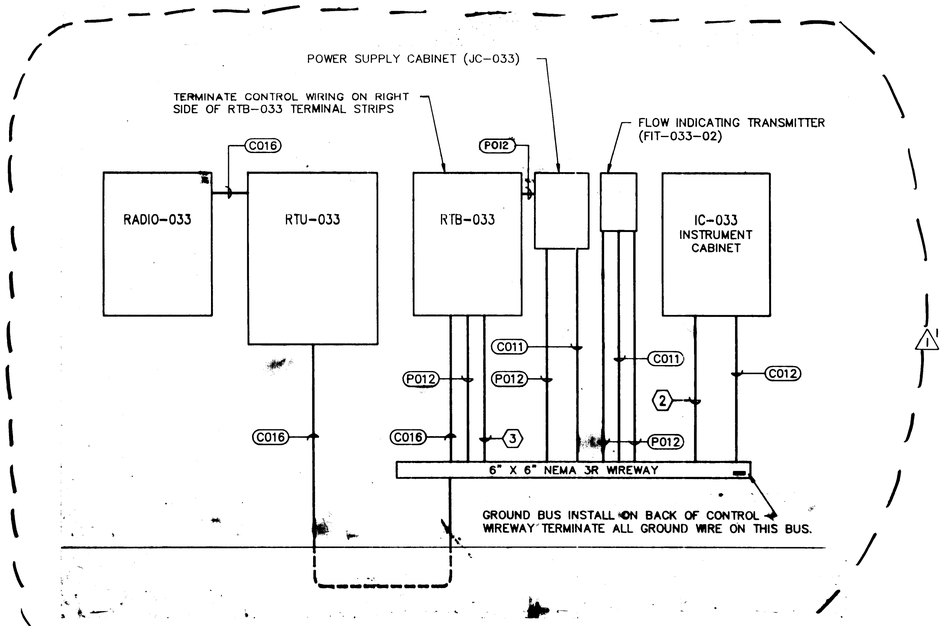

1/6|19 EQUIPMENT ROOM WEST WALL ELEVATION
NOT TO SCALE

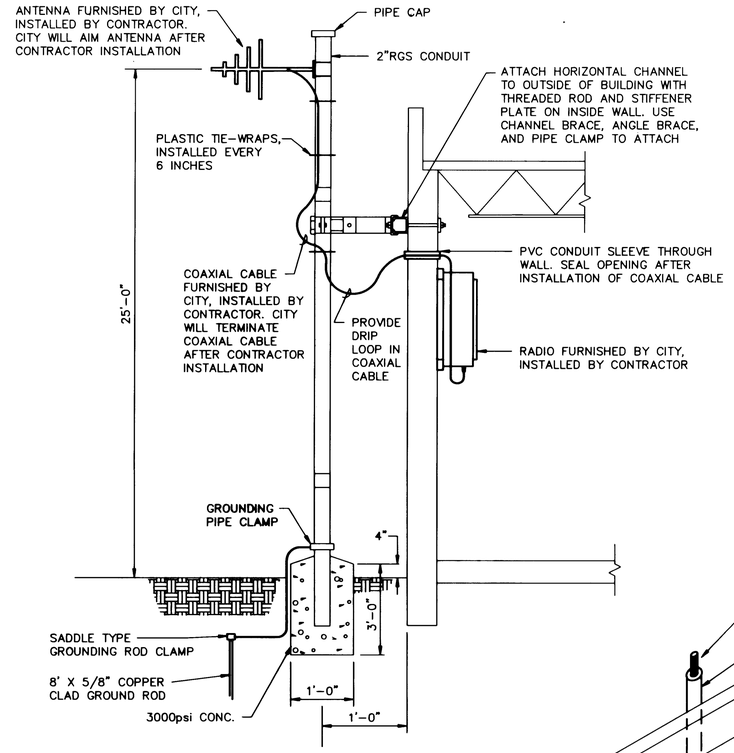

4/6|19/7 ANTENNA AND MAST DETAIL
NOT TO SCALE

GENERAL NOTES

1 SEE SHEET E1 FOR SYMBOLS LEGEND AND ABBREVIATIONS LIST.

2 SEE SHEET E8 FOR SCHEDULES.

KEYED NOTES ⬡

1 CONDUIT TO FIELD DEVICES AND PANELBOARD DP-033 NOT SHOWN FOR DRAWING CLARITY.

2 2"C. WITH CONTROL WIRING TO/FROM FIELD DEVICES AND IC/033. DETERMINE CABLE/CONDUCTOR COUNT FROM INTERCONNECTIONS DIAGRAMS.

3 2"C. WITH CONTROL WIRING TO/FROM FIELD DEVICES AND RTB/033. DETERMINE CABLE/CONDUCTOR COUNT FROM INTERCONNECTIONS DIAGRAMS.

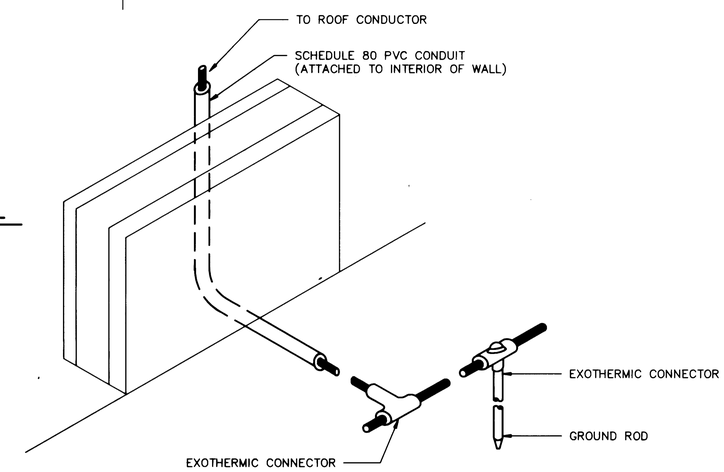

3/7|19 DOWN CONDUCTOR DETAIL
NOT TO SCALE

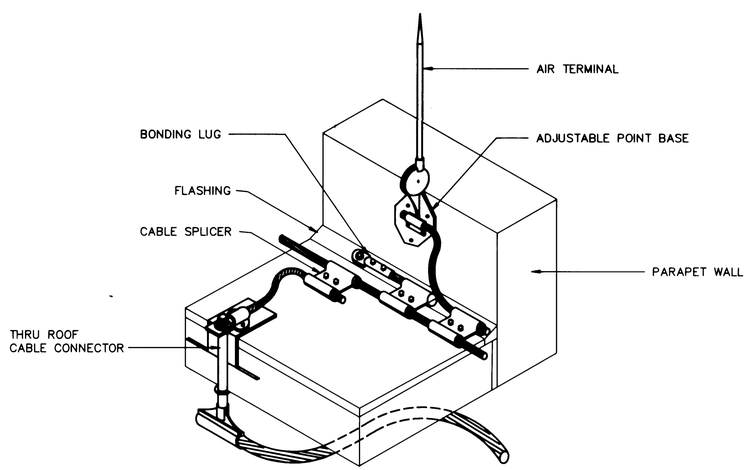

2/7|19 AIR TERMINAL/DOWN CONDUCTOR DETAIL
NOT TO SCALE

AS BUILT INFORMATION
CONTRACTOR MCC DATE 2/92
WORK STAKED BY ALB. SVY. DATE 2/92
INSPECTORS ACCEPTANCE BY LH DATE 12/19/91
FIELD VERIFICATION BY LH DATE 12/91
DRAWINGS CORRECTED BY LH DATE 2/92
MICRO-FILM INFORMATION
RECORDED BY DATE
NO.

BENCH MARKS

SURVEY INFORMATION
FIELD NOTES
NO. BY DATE

ENGINEER'S SEAL

NO.	DATE	REMARKS	BY
2-92	DETAIL REVISION		

REVISIONS

DESIGN
DESIGNED BY D. DOZIER DATE NOV. 9, 1990
DRAWN BY P. STRINEL
CHECKED BY B. GRIFFIS

802621GED2/G802DET2

1 2 3 4 5 6 7 8 9 10
2 6 3 3 3 7 . 9 0 4 7 9 2

RECORD DRAWING
Date FEB 1992
These drawings have been revised based on field data and every reasonable attempt has been made to depict construction as actually performed.

CITY OF ALBUQUERQUE
PUBLIC WORKS DEPARTMENT
ENGINEERING GROUP

TITLE: GUTIERREZ PUMP STATION RECONSTRUCTION DETAILS

APPROVALS	ENGINEER	DATE	APPROVALS	ENGINEER	DATE
DRC CHAIRMAN	Reg Wilson	11/16/90	WATER	R.W. Kane	11-13-90
TRANSPORTATION	N/A RWD	11-16-90	WASTE WATER	R.W. Kane	11-13-90
HYDROLOGY	LDM	11-15-90			

PROJECT NO. 3337.90 MAP NO. F-22 SHEET E19 OF 19

RESERVIOR

NOTES:

1. Existing controller shall be removed and relocated as shown.
2. Contractor shall locate 24 volt valve wires in existing mainline trench and splice to new wires from relocated controller. All splices shall be made using 3M Scotch-Loc water proof connectors or approved equal and shall be located in a splice box. All new station wires shall be 14 AWG single strand copper, direct burial type, and any color other than white, black or green. Common wire shall be 12 AWG single strand copper, direct burial type and white in color. Under no conditions shall wires of two different colors be spliced together.
3. All new piping shall be scheduled 40 PVC.

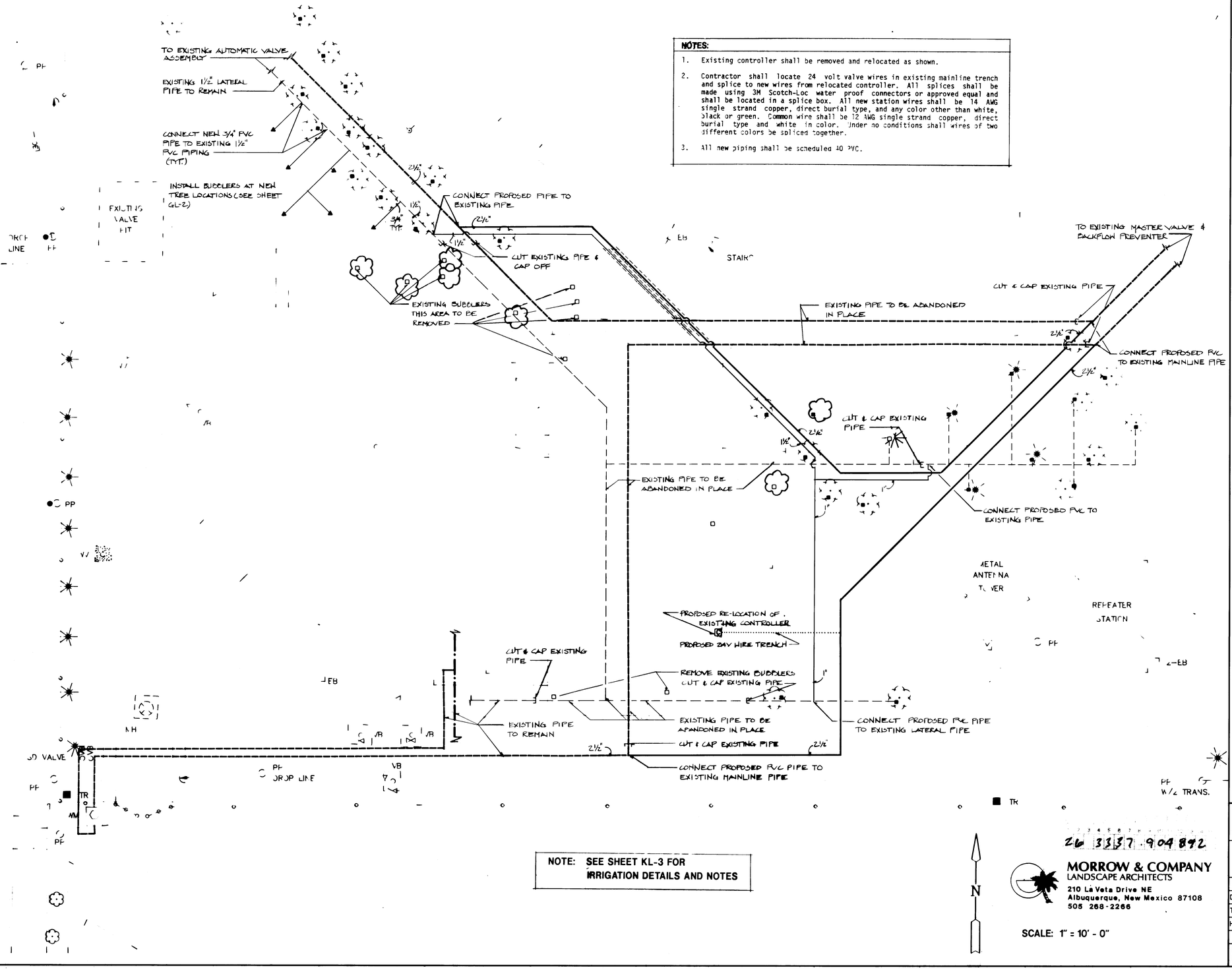

NOTE: SEE SHEET KL-3 FOR IRRIGATION DETAILS AND NOTES

26 3337 904892

MORROW & COMPANY
LANDSCAPE ARCHITECTS
210 La Veta Drive NE
Albuquerque, New Mexico 87108
505 268-2266

SCALE: 1" = 10' - 0"

AS BUILT INFORMATION

CONTRACTOR MCC Construction Co.
WORK STAKED BY ALBUQUERQUE CONTROL INC. DATE 2/91
INSPECTOR'S ACCEPTANCE BY LEESHILL DATE 12/91
FIELD VERIFICATION BY LEESHILL DATE 12/91
CORRECTIONS MADE BY LEESHILL DATE 2/92
RECORDED BY MICRO-FILM INFORMATION DATE
NO.

BENCH MARKS

SURVEY INFORMATION

FIELD NOTES

NO.	BY	DATE

ENGINEER'S SEAL

NO.	DATE	REMARKS	BY

REVISIONS

DESIGN

DESIGNED BY DJB DATE 10-26 1990
DRAWN BY DJB DATE 10-26 1990
CHECKED BY DJB DATE 10-26 1990

RECORD DRAWING
Date FEB 1992
These drawings have been revised based on field data and every reasonable attempt has been made to depict construction actually performed

8026.21CD5 / GUTSGRD

CITY OF ALBUQUERQUE
PUBLIC WORKS DEPARTMENT
ENGINEERING GROUP

TITLE: GUTIERREZ PUMP STATION IRRIGATION PLAN

APPROVALS	ENGINEER	DATE	APPROVALS	ENGINEER	DATE
DRC CHAIRMAN	Roger Wilson	11-16-90	WATER	R.W. Kane	11-13-90
TRANSPORTATION	R. Dourte	11-16-90	WASTE WATER	R.W. Kane	11-13-90
HYDROLOGY	LAM	11-15-90			

PROJECT NO. 3337.90 | MAP NO. F-22 | SHEET GL OF - 1

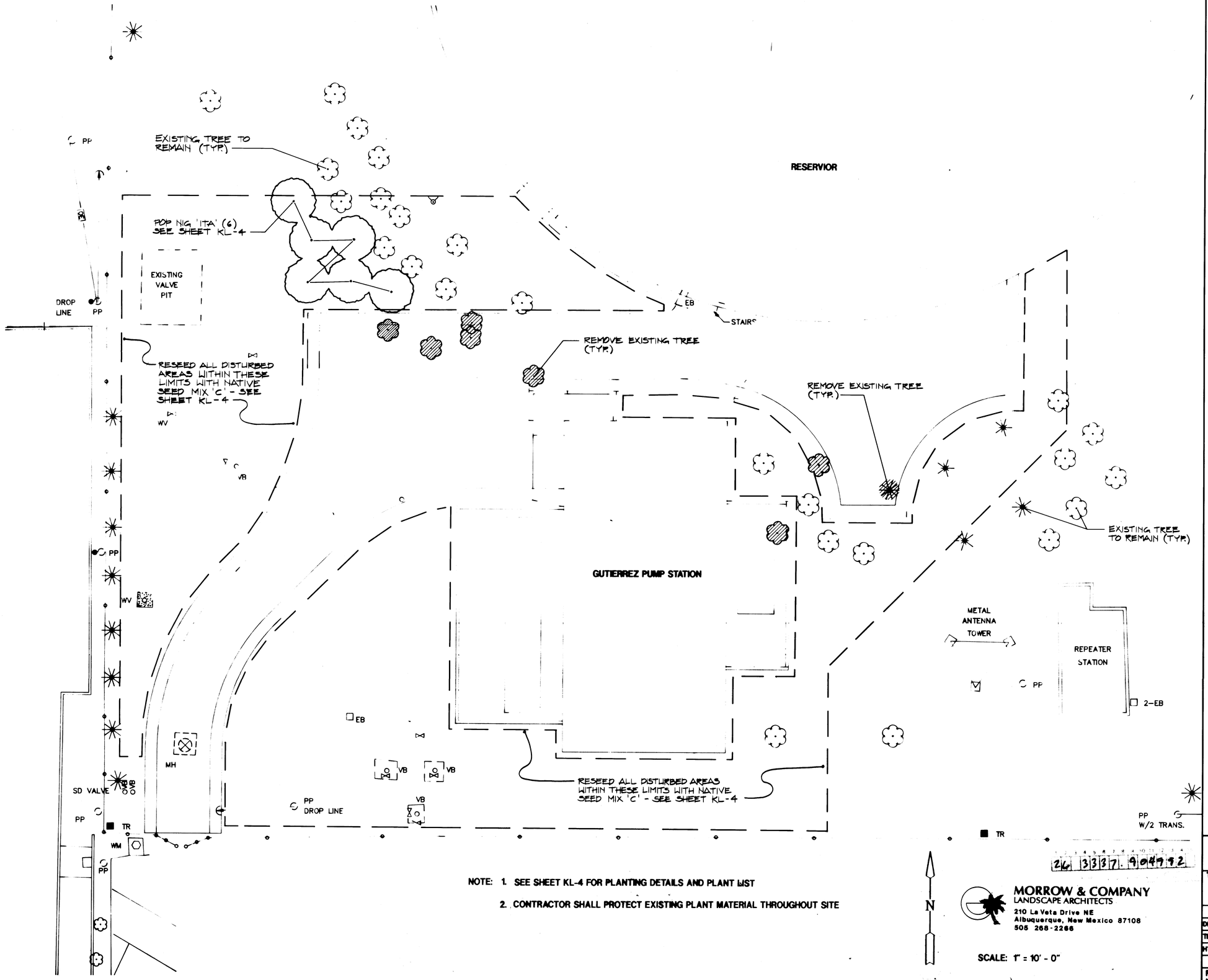

NOTE: 1. SEE SHEET KL-4 FOR PLANTING DETAILS AND PLANT LIST

2. CONTRACTOR SHALL PROTECT EXISTING PLANT MATERIAL THROUGHOUT SITE

SCALE: 1" = 10' - 0"

MORROW & COMPANY
LANDSCAPE ARCHITECTS
210 La Veta Drive NE
Albuquerque, New Mexico 87108
505 268-2266

RECORD DRAWING
FEB 1992
drawings have been revised based on as-built data and every reasonable effort has been made to depict construction as actually performed

8026.21CD5 / GUTSGRD

CITY OF ALBUQUERQUE
PUBLIC WORKS DEPARTMENT
ENGINEERING GROUP

TITLE:
GUTIERREZ PUMP STATION
PLANTING PLAN

APPROVALS	ENGINEER	DATE	APPROVALS	ENGINEER	DATE
DRC CHAIRMAN	[illegible]	11-16-90	WATER	R.W. Kane	11-13-90
TRANSPORTATION	[illegible]	11-16-90	WASTE WATER	R.W. Kane	11-13-90
HYDROLOGY	LDM	11-15-90			

PROJECT NO.	MAP NO.	SHEET
3337.90	F-22	GL - 2

AS BUILT INFORMATION
CONTRACTOR MCC Construction Co.
WORK STAKED BY Albuquerque Surveying Co. DATE 2/91
INSPECTOR'S ACCEPTANCE BY Leo Bustillos DATE 12/91
FIELD VERIFICATION BY Leo Bustillos DATE 12/91
CORRECTED BY Leo Bustillos DATE 2/92
MICRO-FILM INFORMATION
RECORDED BY DATE
NO.

BENCH MARKS

SURVEY INFORMATION
FIELD NOTES
NO. BY DATE

ENGINEER'S SEAL

NO.	DATE	REMARKS	BY
		REVISIONS	
		DESIGN	

DESIGNED BY TNG DATE 10/26/1990
DRAWN BY TNG DATE 10/26/1990
CHECKED BY BCR DATE 10/26/1990

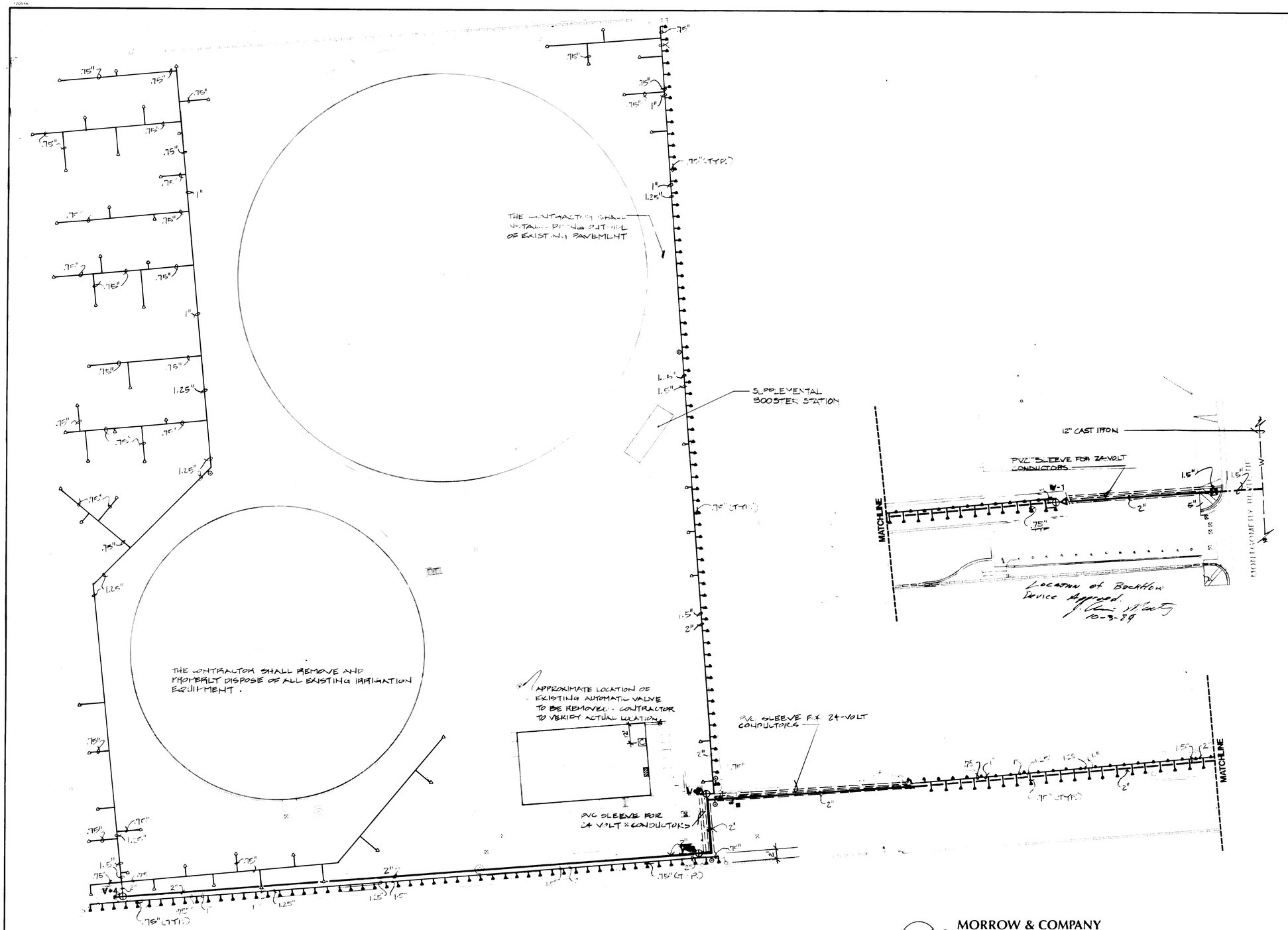

IRRIGATION PLAN

NOTE: SEE SHEET KL-3 FOR IRRIGATION DETAILS AND NOTES

MORROW & COMPANY
LANDSCAPE ARCHITECTS
210 La Veta Drive NE
Albuquerque, New Mexico 87108
505-268-2266

26 3337.90 50 92

SCALE 1"=20'-0"

0 10 20 40

AS BUILT INFORMATION
CONTRACTOR MCC Construction Co.
ALBUQUERQUE
SURVEYING CO. INC. DATE 2/91
FIELD NOTES
AS-BUILT INFORMATION BY MERRENHOFF, INC. DATE 12/91
FIELD VERIFICATION BY MERRENHOFF, INC. DATE 1/92
CONFORMED TO MERRENHOFF, INC. DATE 2/92
DRAWINGS
MICRO-FILM INFORMATION
MICROFILMED BY DATE
NO.

BENCH MARKS

SURVEY INFORMATION
FIELD NOTES
NO. BY DATE

ENGINEER'S SEAL
STATE OF NEW MEXICO
Walter H. Morrow
NO. 2
REGISTERED
LANDSCAPE ARCHITECT

NO.	DATE	REMARKS	BY
		REVISIONS	

DESIGN
DESIGNED BY DATE
DRAWN BY DATE
CHECKED BY DATE

RECORD DRAWING
DATE

These drawings have been prepared from field data and every reasonable effort has been made to display construction as actually performed.

CITY OF ALBUQUERQUE
PUBLIC WORKS DEPARTMENT
ENGINEERING GROUP

TITLE: KIVA LANDSCAPING
IRRIGATION PLAN

APPROVALS	ENGINEER	DATE	APPROVALS	ENGINEER	DATE
D.R.B. Chair					
Trans. Dev.	[illegible]	11-16-89			
Utility Dev.	N.W. Kane	11-13-89			
ARVC	[illegible]	11-15-89			

PROJECT NO. 3337.90 | MAP NO. F-22 | SHEET KL-1

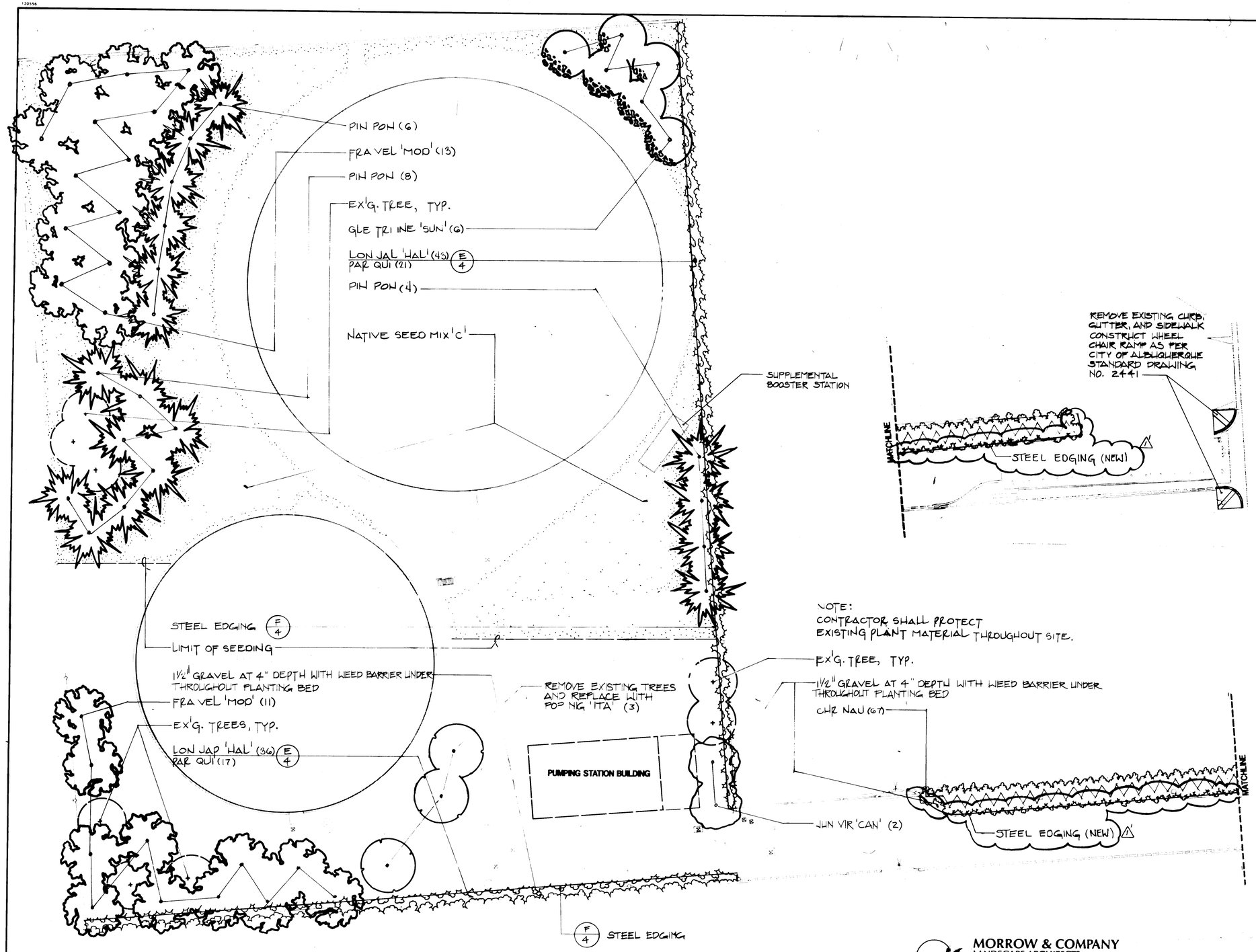

NOTE: SEE SHEET KL-4 FOR PLANTING DETAILS AND PLANT LIST

PLANTING PLAN

MORROW & COMPANY
LANDSCAPE ARCHITECTS
210 La Veta Drive NE
Albuquerque, New Mexico 87108
505-268-2266

26 3337.905192

SCALE 1"=20'-0"

0 10 20 40

AS BUILT INFORMATION

CONTRACTOR M.C.C. Construction Co.
WORK STAKED BY Surveying Co. INC. DATE 5/91
INSPECTED BY [illegible] DATE [illegible]
ACCEPTANCE BY [illegible] DATE 12/91
FIELD VERIFICATION BY [illegible] DATE 12/91
DRAWINGS CORRECTED BY [illegible] DATE 2/92
MICRO-FILM INFORMATION
RECORDED BY DATE
NO

BENCH MARKS

SURVEY INFORMATION

FIELD NOTES

NO.	BY	DATE

ENGINEER'S SEAL

STATE OF NEW MEXICO — JAMES R. MORROW — NO. 3 — REGISTERED LANDSCAPE ARCHITECT

RECORD DRAWING
DATE FEB 1992
These drawings have been reviewed based on field data and every reasonable effort has been made to depict construction as actually performed

NO.	DATE	REMARKS	BY
1	2/92	Added Steel Edging (Gravel Strip)	

REVISIONS

DESIGN

DESIGNED BY	TG	DATE 10/26/90
DRAWN BY	TG	DATE 10/26/90
CHECKED BY	ER	DATE 10/26/90

CITY OF ALBUQUERQUE
PUBLIC WORKS DEPARTMENT
ENGINEERING GROUP

TITLE: KIVA LANDSCAPING
PLANTING PLAN

APPROVALS	ENGINEER	DATE	APPROVALS	ENGINEER	DATE
DRC Chair					
Trans Dev	[illegible]	11-16-90			
Utility Dev	R.W. Lane	11-13-90			
HVD	LDM	11-15-90			

PROJECT NO. 3337.90 MAP NO. F-22 SHEET KL-2

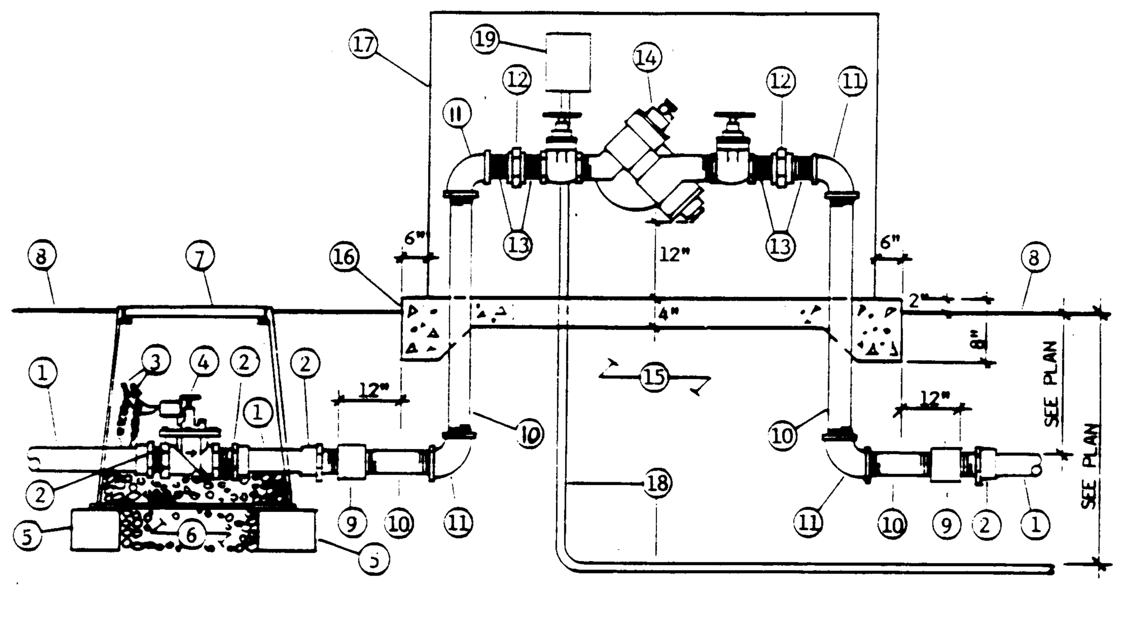

① PVC MAIN LINE PIPING
② PVC MALE ADAPTER
③ WATER PROOF CONNECTORS AND 36" EXPANSION LOOPS
④ MASTER VALVE, SEE IRRIGATION LEGEND
⑤ 8" x 8" x 16" CMU BLOCK
⑥ 2 CUBIC FEET 1" WASHED RIVER ROCK
⑦ BROOKS 1730 VALVE BOX WITH 3 6" EXTENSIONS
⑧ FINISH GRADE
⑨ GALVANIZED COUPLING
⑩ GALVANIZED NIPPLE, LENGTH AS REQUIRED
⑪ GALVANIZED 90° ELL
⑫ GALVANIZED UNION
⑬ GALVANIZED CLOSE NIPPLE
⑭ REDUCED PRESSURE PRINCIPLE BACKFLOW PREVENTOR, SEE IRRIGATION LEGEND
⑮ COMPACT SUBGRADE UNDER CONCRETE SLAB
⑯ 3000 PSI CONCRETE SLAB
⑰ HOT BOX, MODEL NO. 2, PREFABRICATED AND INSULATED BACKFLOW PREVENTOR ENCLOSURE
⑱ 1/2" CONDUIT HOUSING 240-VOLT 2# 10 W/ GROUND FROM PROPOSED PULL BOX TO NEAREST EXISTING ELECTRICAL PANEL
⑲ WATER PROOF PULL BOX FOR 240-VOLT CONDUCTORS AND CONNECTION POINT FOR THERMOLUX HEATING CABLE

A. THE CONTRACTOR SHALL INSTALL ENCLOLSURE TO MANUFACTURER'S RECOMMENDATIONS AND PROVIDE NUTS, BOLTS AND WASHERS FOR ALL LOCKING POINTS OF ENCLOSURE. CONTRACTOR SHALL APPLY TWO COATS OF PAINT TO EXTERIOR OF ENCLOSURE. PAINT SHALL BE APPROVED BY LANDSCAPE ARCHITECT PRIOR TO INSTALLATION.
B. THE HEATING CABLE FOR FREEZE PROTECTION SHALL BE WINTERGARD MODEL NO. W621. INSTALL HEATING CABLE AROUND BACKFLOW PREVENTOR AND FITTINGS TO MANUFACTURERS RECOMMENDATIONS.
C. THE CONTRACTOR SHALL INSTALL A 20 AMP BREAKER IN EXISTING ELECTRICAL PANEL, LABEL ASSOCIATED BREAKER "BACKFLOW PREVENTOR HEAT CABLE."
D. ALL ELECTRICAL WORK AND MATERIALS SHALL MEET STATE AND LOCAL CODES AND COMPLY TO THE N.E.C.

A/3 **MASTER VALVE AND BACKFLOW PREVENTOR ASSEMBLY** NTS

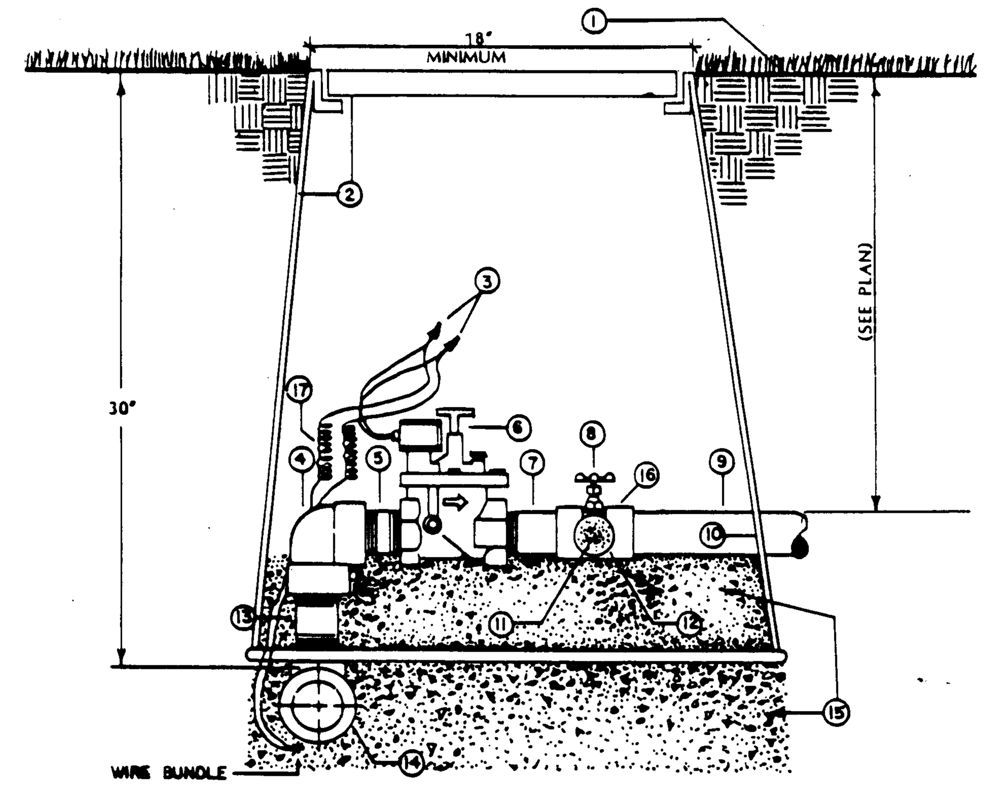

① FINISH GRADE
② 24" LOCKING VALVE BOX WITH 6" EXTENSION
③ WATERPROOF WIRE CONNECTOR
④ PVC THREADED ELL, SCH. 40
⑤ SCH. 80 PVC NIPPLE (4" LENGTH)
⑥ AUTOMATIC VALVE (SEE PLAN)
⑦ SCH. 80 PVC TOE NIPPLE (4" LENGTH)
⑧ 1/2" BRASS GATE VALVE
⑨ PVC LATERAL PIPING
⑩ CUT-OUT FOR LATERAL PIPE
⑪ 1/2" x CLOSE SCH.80 PVC NIPPLE
⑫ AUTOMATIC DRAIN VALVE
⑬ SCH. 80 PVC NIPPLE (4" LENGTH)
⑭ CLASS 200 O-RING SERVICE TEE
⑮ 3 C.F. GRAVEL SUMP
⑯ PVC LATERAL TEE SST, SCH. 40
⑰ 36" WIRE EXPANSION LOOP

B/3 **AUTOMATIC VALVE ASSEMBLY** NTS

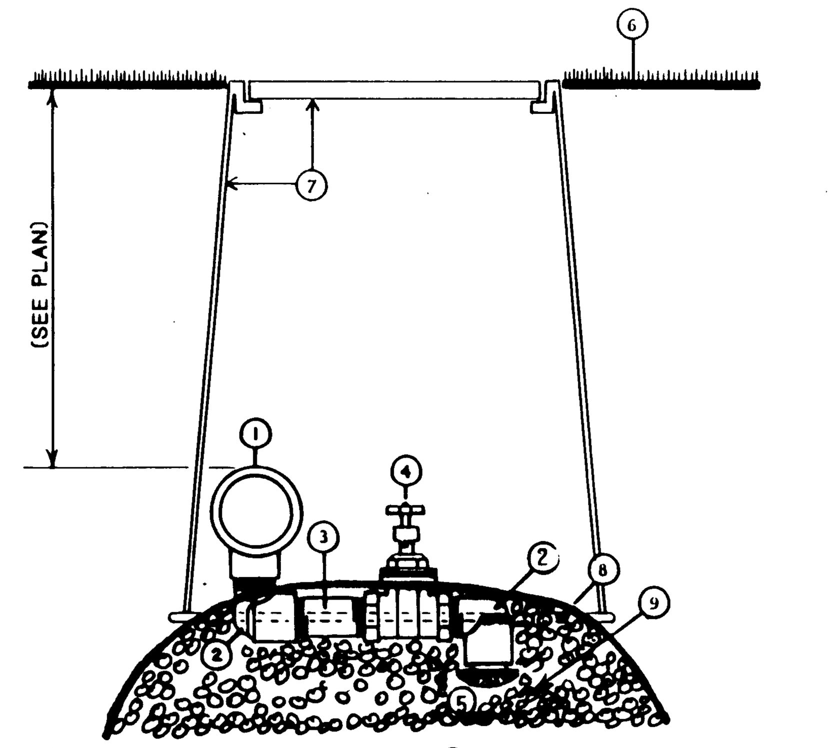

① MAINLINE OR LATERAL TEE
② PVC STREET ELL TXT
③ SCH. 80 PVC NIPPLE - 3" LONG
④ CHAMPION 100RS-075, 3/4" STRAIGHT VALVE
⑤ KING DRAIN - 3/4" MIPT
⑥ FINISH GRADE
⑦ BROOKS 1730 VALVE BOX WITH 6" EXTENSION
⑧ 6 MIL. POLY. COVER
⑨ GRAVEL SUMP (3 CUBIC FEET)

C/3 **MANUAL DRAIN ASSEMBLY (3/4")** NTS

IRRIGATION LEGEND

Symbol	Description	Detail
— —W— —	EXISTING DISTRIBUTION LINE, SIZE AND MATERIAL INDICATED ON PLAN	
—·—·—	SERVICE LINE, PLASTIC TUBING PER CITY STANDARD SPECIFICATION 802.3.3 (CONNECT TO CITY DISTRIBUTION LINE BY PRESSURE CONNECTION)	
⊠	WATER METER, SIZE AS INDICATED ON PLANS (INSTALL AS PER CITY STANDARD DETAILS 2360 THRU 2369)	
⊕	WEATHERMATIC 8024-BCR-15 1-1/2" AUTOMATIC VALVE ASSEMBLY............SEE DETAIL	B/3
△	WEATHERMATIC 8024-BCR-20-PRS 2" AUTOMATIC VALVE WITH FEBCO 825Y-2 REDUCED PRESSURE PRINCIPLE BACKFLOW PREVENTER..........SEE DETAIL	A/3
●	MANUAL DRAIN ASSEMBLY, SIZE 3/4"..................................SEE DETAIL	C/3
⊓	SOLVENT WELD CAP, (LINE SIZE)	
C	TORO 189-66-01 SIX STATION WALL MOUNT CONTROLLER....................SEE DETAIL	D/3
▨	EXISTING 120 VOLT ELECTRICAL PANEL	
= = =	SLEEVE PIPING, CLASS 200 PVC (TWO SIZES LARGER THAN PIPE TO BE SLEEVED), (SLEEVE PIPE FOR 24 VOLT WIRE SHALL BE 1-1/4" CLASS 200 PVC)	
——	LATERAL PIPING, SCH. 40 PVC - 18" BURY	
━━	MAINLINE PIPING, SCH. 40 PVC - 28 " BURY	
▲	TORO 570C-3P, 3" POP-UP BUBBLER ASSEMBLY WITH FB-25-PC NOZZLE..SEE DETAIL	E/3
△	TORO 570C-3P, 3" POP-UP BUBBLER WITH FB-50-PC NOZZLE..SEE DETAIL	E/3
□	EXISTING BUBBLER TO BE REMOVED.	
■	EXISTING BUBBLER TO REMAIN.	
- - - -	EXISTING LATERAL PIPE.	
———	EXISTING MAINLINE PIPE.	

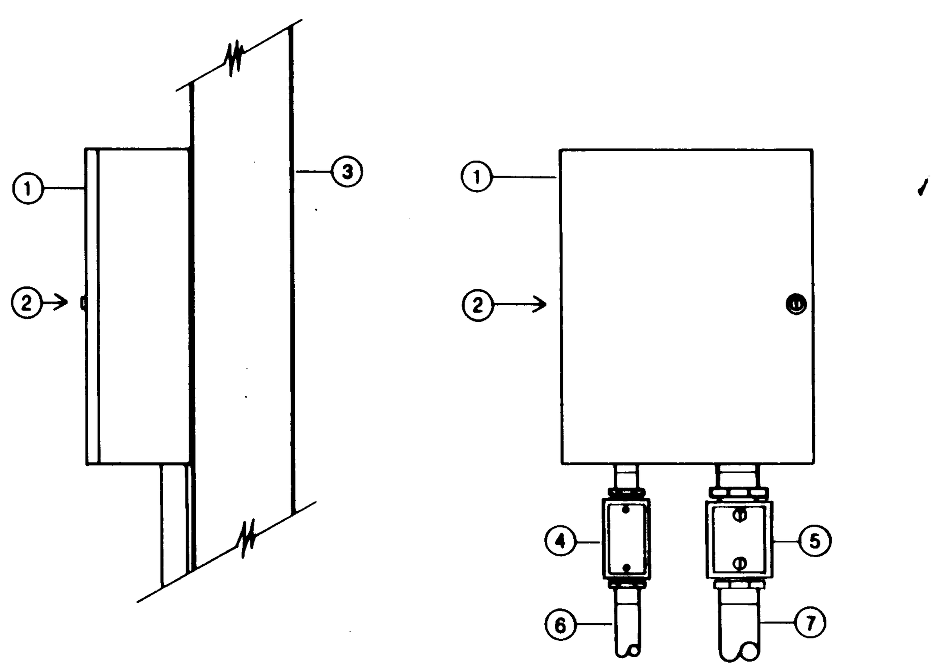

① CONTROLLER (SEE IRRIGATION LEGEND), MOUNT SECURLY TO WALL
② EYE LEVEL
③ WALL
④ 1/2" LB BOX
⑤ 1" LB BOX
⑥ 1/2" EMT CONDUIT (HOUSING 120VOLT, 14 GAUGE WIRES)
⑦ RIGID CONDUIT (HOUSING 24VOLT, 14 GAUGE CONTROL WIRES. SIZE 1")

D/3 **CONTROLLER DETAIL** NTS

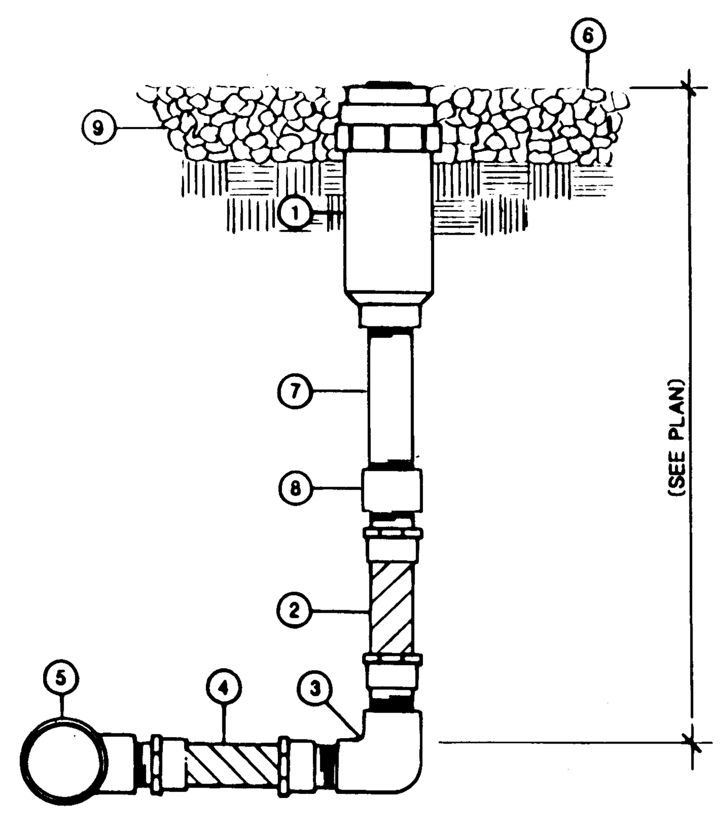

① POP-UP BUBBLER ASSEMBLY (SEE PLAN)
② 1/2"x 6" MAxMA FLEX NIPPLE PVC
③ 1/2" PVC THREADED ELL
④ 1/2"x6" MAxMA FLEX NIPPLE PVC
⑤ PVC LATERAL TEE SST
⑥ FINISH GRADE /TOP OF BARK MULCH
⑦ 1/2" PVC NIPPLE (LENGTH AS REQUIRED)
⑧ 1/2" PVC THREADED COUPLING
⑨ BARK MULCH, 2" DEPTH

E/3 **POP-UP BUBBLER ASSEMBLY** NTS

IRRIGATION NOTES

1. The proposed metered water service shall be as per Standard City Detail DWG. 2362 and 2363 and installed complete by the Contractor.
2. All water taps to existing distribution lines shall be pressure connections.
3. The proposed controller locations indicated on the plans are approximate. Actual location of the controller shall be determined by the Owner's representative in the field. Contractor shall extend electrical source from the existing electrical panel to the controller location.
4. Where crossing existing hard construction is shown on plans, the Contractor shall saw-cut existing asphalt and/or concrete prior to trenching, remove and properly dispose of debris, install sleeve piping, compact subgrade to 95%, and replace asphalt and/or concrete to match existing areas.
5. The Contractor shall adjust all valves, bubblers, and sprinklers for optimum coverage, and shall provide and install nozzles other than those specified as instructed by the Landscape Architect at no additional cost to the Owner.
6. All existing distribution line locations are schematic. It shall be the Contractor's responsibility to pot hole and field check to determine actual locations as an incidental requisite to the construction contract.
7. Exposed conduit for 24 volt conductors above grade and outside of buildings shall be rigid steel conduit.
8. The service line between the pressure connection and water meter shall be plastic tubing as per City Std. Specification 802.3.3.
9. Contractor shall install manual drains on the lateral piping at the lowest point to insure complete drainage of the lateral. Quantity shall be as required and shall be located on the "As-Built" drawings. (Location shall be determined by the Contractor and shall be approved by the Owner's representative prior to installation). (Minimum one per zone.) See C/3
10. All proposed irrigation piping shall be marked using marker tape which shall be laid horizontally 4" above piping. Piping laid in common trenches shall have marker tape for each pipe. Tape shall be 2" wide and marked "buried water line", blue in color and metallic for future location. Product is available from Pipeline Material Inc. Albuquerque, New Mexico (505) 821-2626 (or approved equal).
11. 24 volt wire shall be run from the controller to the closest irrigation trench, minimizing the amount of trenching required for the installation of the wire. The Contractor shall review the proposed routing of the 24 volt wire with the Landscape Architect and have the route approved by the Landscape Architect prior to installation.
12. The Contractor shall wire 120 volt AC needed for the irrigation controller to the closest 120 volt electrical panel. Associated breaker shall be labeled "Irrigation Control Panel". Actual location for connection shall be determined by the Owner's representative in the field.
13. All 24 volt wire shall be marked with a 6" wide yellow marker tape and marked "Warning-Electrical". Lay marker tape horizontally 4" above wire.
14. All gate valves on pressure vacuum breakers shall be equipped with resilient seat gate valves.
15. In addition to other specified tests and inspections, the irrigation systems shall be performance tested and witnessed by the Compliance Officer from the City of Albuquerque Health and Environment Department for conformance with the provisions of the Waste Water Ordinance.
16. "Remove all existing irrigation equipment", where called for on plans, shall be defined as removing and properly disposing of all existing manual valves, automatic valves, vacuum breakers, risers, sprinkler heads, bubbler heads, nipples, controllers, 120 volt conduit and conductors, manual drains and valve boxes. Existing piping shall be capped and abandoned.

RECORD DRAWING
Date FEB 1992
These drawings have been revised based on field data and every reasonable attempt has been made to depict construction as actually performed

26 3337.905292

MORROW & COMPANY
LANDSCAPE ARCHITECTS
210 La Veta Drive NE
Albuquerque, New Mexico 87108
505 268-2266

AS BUILT INFORMATION
CONTRACTOR MCC Construction Co.
WORK STAKED BY ALBUQUERQUE SURVEYING CO. INC. DATE 2/91
INSPECTOR'S ACCEPTANCE BY LEEDSHILL-HERKENHOFF, INC. DATE 12/91
FIELD VERIFICATION BY LEEDSHILL-HERKENHOFF, INC. DATE 12/91
DRAWINGS CORRECTED BY LEEDSHILL-HERKENHOFF, INC. DATE 2/92
MICRO-FILM INFORMATION
RECORDED BY / DATE
NO.

BENCH MARKS

SURVEY INFORMATION
FIELD NOTES
NO. | BY | DATE

ENGINEER'S SEAL

REVISIONS
NO. | DATE | REMARKS | BY

DESIGN
DESIGNED BY T. G. DATE 10/26/90
DRAWN BY T. G. DATE 10/26/90
CHECKED BY E.R. DATE 10/26/90

CITY OF ALBUQUERQUE
PUBLIC WORKS DEPARTMENT
ENGINEERING GROUP

TITLE: **KIVA LANDSCAPING**
IRRIGATION DETAILS AND NOTES

APPROVALS	ENGINEER	DATE	APPROVALS	ENGINEER	DATE
D.R.C. Chair	[signature]	11/16/90			
Trans. Dev.	[signature]	11-16-90			
Utility Dev.	R.W. Kane	11-13-90			
Hyd	CDM	11-15-90			

PROJECT NO. 3337.90 | MAP NO. F - 22 | SHEET KL - 3

126990

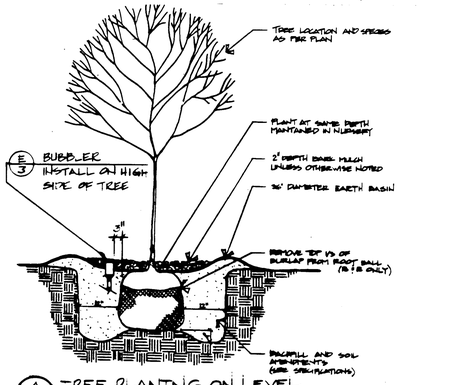

A/4 TREE PLANTING ON LEVEL

N.T.S.

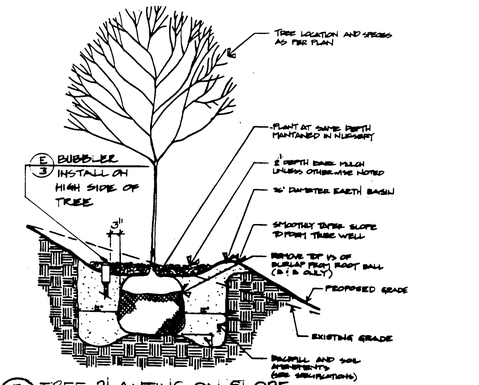

B/4 TREE PLANTING ON SLOPE

N.T.S.

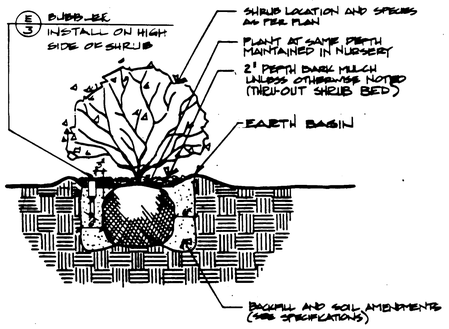

C/4 SHRUB PLANTING ON LEVEL

N.T.S.

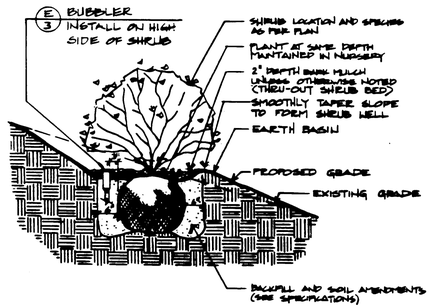

D/4 SHRUB PLANTING ON SLOPE

N.T.S.

NOTE: PLANT VINES INSIDE OF FENCE OTHERWISE INDICATED ON PLAN.

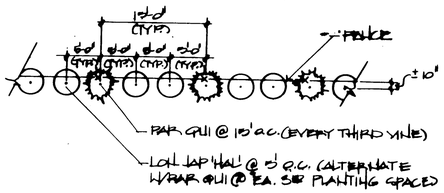

E/4 LON JAP 'HAL'/PAR QUI PLANTING

N.T.S.

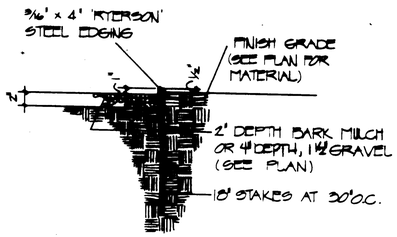

F/4 STEEL EDGING

N.T.S.

PLANT LIST

SYMBOL	BOTANICAL NAME	COMMON NAME	SIZE	QUANTITY	REMARKS
TREES					
FRA VEL 'MOD'	Fraxinus velutina	Modesto Ash	15 gallon	24	1-1/2" cal., 8'-10' ht., 3' min. spd.
GLE TRI INE 'SUN'	Gleditsia triacanthos inermis 'Sunburst'	Shademaster Honey Locust	15 gallon	6	1-1/2" cal., 8'-10' ht., 3' min. spd.
PIN PON	Pinus ponderosa	Ponderosa Pine	15 gallon	18	4'-6' ht., 3' min. spd.
POP NIG 'ITA'	Populus nigra 'Italica'	Lombardy Poplar	15 gallon	9	1-1/2" cal., 8'-10' ht.
JUN VIR 'CAN'	Juniperus virginiana 'Canaerti'	Canaerti Juniper	15 gallon	2	1-1/2" cal., 4'-6' ht., 3' min. spd.
SHRUBS					
CHR NAU	Chrysothamnus nauseosus 'Graveolens'	Green Rabbitbrush	5 gallon	67	2'-3' ht., 6'-0" o.c.
VINES					
LON JAP 'HAL'	Lonicera japonica 'Halliana'	Hall's Honeysuckle	1 gallon	79	Min. 4 stems of 12" min. length
PAR QUI	Parthenocissus quinquefolia	Virginia Creeper	1 gallon	38	Min. 4 stems of 12" min. length

SEEDING

NATIVE SEED MIX 'C' **14280 SF Kiva Landscaping, 11912 SF Gutierrez**

Bouteloua curtipendula	Sideoats Grama	5 lbs. PLS/acre at 1/2" depth
Eragrostis lehmanniana	Lehmann Lovegrass	2 lbs. PLS/acre at 1/2" depth
Oryzopsis hymenoides	Indian Ricegrass	5 lbs. PLS/acre at 4" depth
Sporobolus cryptandrus	Sand Dropseed	2 lbs. PLS/acre at 1/2" depth
Wildflowers: Plants of the Southwest #4000 Desert Mix		2 lbs/acre at 1/2" depth

PLANTING NOTES

1. Quantities shown on the Plant List are estimates only. Contractor shall verify all quantities prior to bid and installation. No additional payment will be made for any discrepancies in quantites.

2. Honeysuckle shall be planted at 5'-0" o.c. when planted along a fence.

3. Where plans call for vines to be planted next to a fence, vines shall be planted inside fence unless otherwise indicated on plans. Vines shall be planted ± 12" from fence. The Contractor shall lead vines up fence upon installation.

4. If there is a discrepancy in field or nursery trees between the container size called out under "Size" and the caliper and height called out under "Remarks", the specified tree must meet the caliper and height requirements specified "Remarks," even if a larger contrainer size is required to meet these specifications, at no additional cost to the Owner.

5. Balled and Burlapped (B & B) trees will be an acceptable substitute for container trees. B & B trees must meet size requirements specified under "Remarks". Root ball sizes must meet the following specifications:

Deciduous Trees	Caliper	Min. Root Ball Diameter
	1-1/2"	20"
	2"	24"

Evergreen Trees	Height	Min. Root Ball Diameter
	4'-6'	20"
	6'-8'	24"
	8'-10'	30"

6. The Contractor shall prune lower branches of decidious trees to 6 feet above finish grade.

7. Native seed shall be drill seeded, except in areas where the slope is too steep to be drill seeded (slopes over 3:1 gradient), in which case seed shall be broadcast.

8. Immediately after installation of seed, native grasses shall be watered for six weeks with a temporary watering system at the following rates:

Weeks 1 thru 3: 1/2" water twice per week
Weeks 3 thru 6: 1/2" water once per week

NOTE: PLANT LIST INCLUDES ALL PLANTS FROM KIVA LANDSCAPING AND GUTIERREZ PUMP STATION

26 3337.905392

MORROW & COMPANY
LANDSCAPE ARCHITECTS
210 La Veta Drive NE
Albuquerque, New Mexico 87108
505 268-2266

AS BUILT INFORMATION
CONTRACTOR Arctic Construction Co.
NO. CHANGES MADE IN FIELD
STAKED BY Surveying Co. Inc. DATE 2/91
INSPECTOR'S DISTANCE BY Leedshill-Herkenhoff Inc DATE 12/91
FIELD VERIFICATION BY Leedshill-Herkenhoff Inc DATE 2/91
DRAWINGS CORRECTED BY Leedshill-Herkenhoff Inc DATE 2/91
MICRO-FILM INFORMATION
RECORDED BY DATE
NO.

BENCH MARKS

SURVEY INFORMATION
FIELD NOTES

NO.	BY	DATE

ENGINEER'S SEAL

NO.	DATE	REMARKS	BY
		REVISIONS	

DESIGN

DESIGNED BY	T.G.	DATE 10/26/90
DRAWN BY	T.G.	DATE 10/26/90
CHECKED BY	E.R.	DATE 10/26/90

RECORD DRAWING
Date FEB 1992
These drawings have been revised based on field data and every reasonable attempt has been made to depict construction as actually performed

CITY OF ALBUQUERQUE
PUBLIC WORKS DEPARTMENT
ENGINEERING GROUP

TITLE: KIVA LANDSCAPING
PLANTING DETAILS AND PLANT LIST

APPROVALS	ENGINEER	DATE	APPROVALS	ENGINEER	DATE
D.R.C. Chair		11/16/90			
Trans. Dev.		11-16-90			
Utility Dev.	R.W. Lane	11-13-90			
HYD	LDM	11-15-90			

PROJECT NO.	MAP NO.	SHEET
3337.90	F - 22	KL - 4

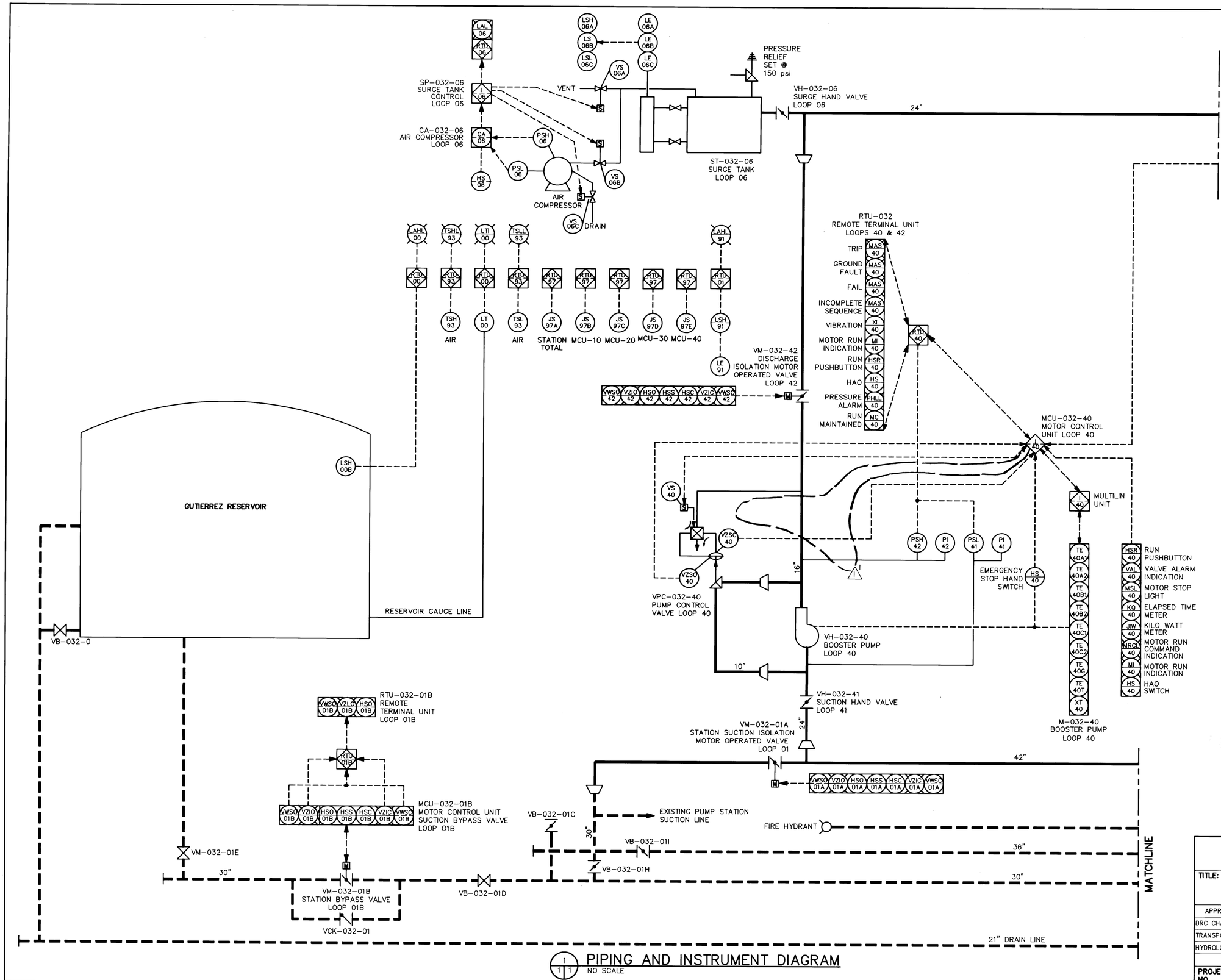

1/1 PIPING AND INSTRUMENT DIAGRAM
NO SCALE

2.6 3337.905992

RECORD DRAWING
Date FEB 1992
These drawings have been revised based on field data and every reasonable attempt has been made to depict construction as actually performed

802624ED1/GPID1

AS BUILT INFORMATION

CONTRACTOR	MCC	
STAKED BY	ALB. SVY.	DATE 2/92
INSPECTOR'S ACCEPTANCE BY	LH	DATE 12/19/91
FIELD VERIFICATION BY	LH	DATE 12/91
DRAWINGS CORRECTED BY	LH	DATE 2/92

MICRO-FILM INFORMATION

RECORDED BY	
DATE	
NO.	

BENCH MARKS

SURVEY INFORMATION

FIELD NOTES

NO.	BY	DATE

ENGINEER'S SEAL

NO.	DATE	REMARKS	BY
1	2-92	VALVE REMOVAL	LH

REVISIONS

DESIGNED BY H. LIVERMORE
DRAWN BY P. STRINEL
CHECKED BY -
DATE NOV. 9, 1990

CITY OF ALBUQUERQUE
PUBLIC WORKS DEPARTMENT
ENGINEERING GROUP

TITLE: GUTIERREZ PUMP STATION RECONSTRUCTION
PIPING AND INSTRUMENT DIAGRAM

APPROVALS	ENGINEER	DATE	APPROVALS	ENGINEER	DATE
DRC CHAIRMAN	Roger Adams	11/16/90	WATER	R.W. Kane	11-13-90
TRANSPORTATION	N/A Ritter	11-16-90	WASTE WATER	R.W. Kane	11-13-90
HYDROLOGY	LDM	11-15-90			

PROJECT NO. 3337.90 | MAP NO. F-22 | SHEET 11 OF 3

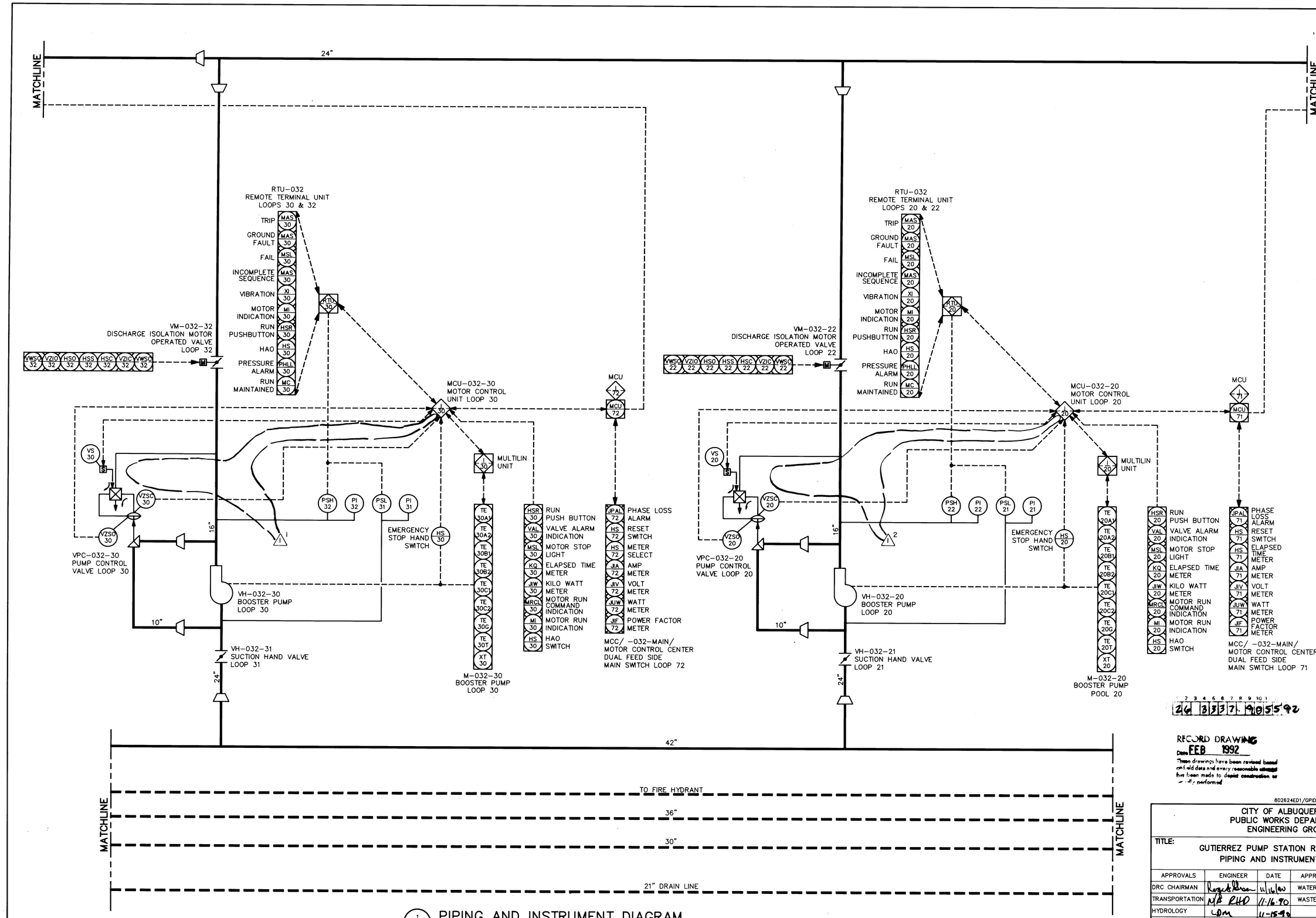

1/2 PIPING AND INSTRUMENT DIAGRAM
NO SCALE

2G 3337.90 5592

RECORD DRAWING
Date FEB 1992
These drawings have been revised based on field data and every reasonable effort has been made to depict construction as actually performed

802624ED1/GPID2

AS BUILT INFORMATION
CONTRACTOR MCC
STAKED BY ALB. SVY. DATE 2/92
INSPECTOR'S MARKS CHANGE BY LH DATE 12/19/91
FIELD VERIFICATION BY LH DATE 12/91
MARKS CORRECTED BY LH DATE 2/92
MICRO-FILM INFORMATION
RECORDED BY DATE
NO.

BENCH MARKS

SURVEY INFORMATION
FIELD NOTES
NO. BY DATE

ENGINEER'S SEAL
DON R. WALKER
NEW MEXICO
1985
REGISTERED PROFESSIONAL ENGINEER

NO.	DATE	REMARKS	BY
2	2-92	VALVE REMOVALS	LH

REVISIONS

DESIGNED BY H. LIVERMORE DATE NOV. 9, 1990
DRAWN BY P. STRINEL
CHECKED BY -

CITY OF ALBUQUERQUE
PUBLIC WORKS DEPARTMENT
ENGINEERING GROUP

TITLE:
GUTIERREZ PUMP STATION RECONSTRUCTION
PIPING AND INSTRUMENT DIAGRAM

APPROVALS	ENGINEER	DATE	APPROVALS	ENGINEER	DATE
DRC CHAIRMAN	Roger Anderson	11/16/90	WATER	R.W. Kane	11-13-90
TRANSPORTATION	M.A. RHD	11-16-90	WASTE WATER	R.W. Kane	11-13-90
HYDROLOGY	LDM	11-15-90			

PROJECT NO. 3337.90 MAP NO. F-22 SHEET 12 OF 3

GENERAL NOTES

1 SEE SHEET E1 FOR SYMBOLS LEGEND AND ABBREVIATIONS LIST.

2 SEE SHEET E8 FOR SCHEDULES.

3 BELOW GRADE CONDUIT ROUTING SHOWN PARALLEL TO BUILDING LINES FOR DRAWING CLARITY ONLY. ROUTE BELOW GRADE CONDUIT FROM POINT-TO-POINT IN A STRAIGHT LINE. PROVIDE ADDITIONAL BENDS ONLY WHEN NECESSARY TO AVOID BELOW GRADE PIPING, STRUCTURAL ELEMENTS, OR OTHER CONDUIT.

KEYED NOTES

1 TO HEATING/COOLING CONTROL PANEL.

2 DAMPER END-OF-TRAVEL LIMIT SWITCH.

3 TERMINATE CABLE WITH WATERTIGHT CORD CONNECTOR. CONNECT PUMP TO RECEPTACLE CIRCUIT. SEE PLAN 2, SHEET E4.

4 30 A, 3-PHASE, 3-WIRE, NON-FUSED DISCONNECT SWITCH (SS-82A/SS-82B).

5 EVAPORATIVE COOLER FAN MOTOR.

6 EVAPORATIVE COOLER PUMP MOTOR.

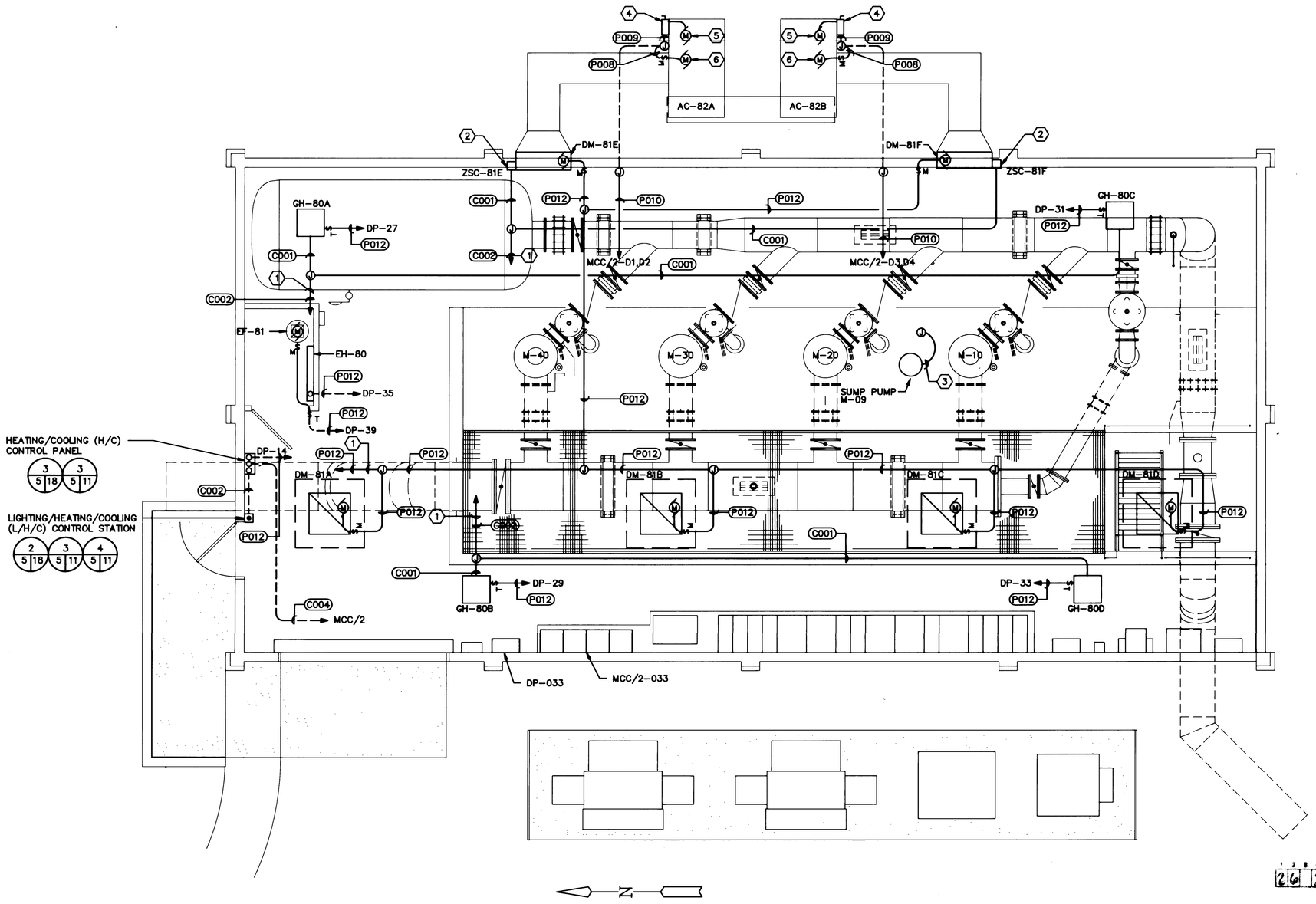

1/5 MECHANICAL SYSTEMS ELECTRICAL PLAN
SCALE: 1/4"=1'-0"

RECORD DRAWING
Date FEB 1992
These drawings have been revised based on field data and every reasonable attempt has been made to depict construction as actually performed

26 3337.902592

AS BUILT INFORMATION

CONTRACTOR		
WORK STAKED BY		DATE
INSPECTOR'S ACCEPTANCE BY		DATE
FIELD VERIFICATION BY		DATE
DRAWINGS CORRECTED BY		DATE

MICRO-FILM INFORMATION

RECORDED BY	DATE
NO.	

BENCH MARKS

SURVEY INFORMATION

FIELD NOTES

NO.	BY	DATE

ENGINEER'S SEAL

NO.	DATE	REMARKS	BY
		REVISIONS	
		DESIGN	

DESIGNED BY D. DOZIER DATE NOV. 9, 1990
DRAWN BY P. STRINEL
CHECKED BY B. GRIFFIS

8026210ED1/G8026MEC

CITY OF ALBUQUERQUE
PUBLIC WORKS DEPARTMENT
ENGINEERING GROUP

TITLE: GUTIERREZ PUMP STATION RECONSTRUCTION
MECHANICAL SYSTEMS ELECTRICAL PLAN

APPROVALS	ENGINEER	DATE	APPROVALS	ENGINEER	DATE
DRC CHAIRMAN	Roger Johnson	11/16/90	WATER	R.W. Kane	11-13-90
TRANSPORTATION	N/A RWO	11-16-90	WASTE WATER	R.W. Kane	11-13-90
HYDROLOGY	LDM	11-15-90			

PROJECT NO. 3337.90 MAP NO. F-22 SHEET E5 OF 19

GENERAL NOTES

1. SEE SHEET E1 FOR SYMBOLS LEGEND AND ABBREVIATIONS LIST.
2. SEE SHEET E8 FOR SCHEDULES.
3. BELOW GRADE CONDUIT ROUTING SHOWN PARALLEL TO BUILDING LINES FOR DRAWING CLARITY ONLY. ROUTE BELOW GRADE CONDUIT FROM POINT-TO-POINT IN A STRAIGHT LINE. PROVIDE ADDITIONAL BENDS ONLY WHEN NECESSARY TO AVOID BELOW GRADE PIPING, STRUCTURAL ELEMENTS, OR OTHER CONDUIT. ROUTE CONDUIT SHOWN INSTALLED ON UNDERSIDE OF SUCTION PIT CANTILEVERED FLOOR EXPOSED AND PARALLEL TO BUILDING LINES.

KEYED NOTES

1. SEE SHEET E2 FOR CONTINUATION.
2. 1"C PVC, 10'-0" (MINIMUM) ABOVE FINISH FLOOR. (1/5)
3. COORDINATE LOCATION OF CONDUIT STUB-UP WITH EQUIPMENT MANUFACTURER. TYPICAL FOR ALL PADMOUNTED AND BOTTOM FED EQUIPMENT.
4. SEAL CONDUIT OPENING AFTER CABLE/CONDUCTOR INSTALLATION. TYPICAL FOR ALL EXTERIOR PADMOUNTED EQUIPMENT AND ELSEWHERE AS NOTED.
5. 6" X 6" NEMA 3R HINGED COVER ENCLOSURE WITH 2 POSITION TERMINAL STRIP MOUNTED TO SIDE OF METERING ENCLOSURE. INSTALL 1/2"C NIPPLE BETWEEN NEMA 3R ENCLOSURE AND METERING ENCLOSURE. TERMINATE CONTROL WIRE FROM RTB ON TERMINAL STRIP. CONTROL WIRE FROM TERMINAL STRIP TO KWHR METER WILL BE INSTALLED BY PNM.
6. BOOSTER PUMP MOTOR TERMINAL BOX (MTB-40) AND VIBRATION TRANSMITTER (XT-40). (SIMILAR FOR M-10, M-20, AND M-30).
7. BOOSTER PUMP LOW SUCTION PRESSURE SWITCH (PSL-40) AND HIGH DISCHARGE PRESSURE SWITCH (PSH-40). (SIMILAR FOR M-10, M-20, AND M-30).
8. 60 A, 3-PHASE, 3-WIRE, NON-FUSED DISCONNECT SWITCH (SS-06).
9. SURGE TANK LEVEL ELEMENTS (LE-06).
10. SURGE TANK AIR COMPRESSOR PRESSURE SWITCH (PSL-06).
11. SURGE TANK SOLENOID VALVE (VS-06A).
12. SURGE TANK SOLENOID VALVE (VS-06B).
13. SURGE TANK SOLENIOD VALVE (VS-06C).
14. CENTERLINE OF 16" WIDE (MAXIMUM) CONDUIT TRAPEZE, SUSPENDED FROM FIXED GRATING.
15. 33'-6" TO TRAPEZE CENTERLINE (NOT DRAWN TO SCALE).
16. 17'-6" TO TRAPEZE CENTERLINE (NOT DRAWN TO SCALE).
17. INSTALL TWO CONDUIT TRAPEZES SUPPORTED FROM FIXED GRATING SPACED EQUALLY ALONG GRATING.
18. POWER FOR SURGE CONTROL PANEL, TO BE TAKEN FROM 1Φ OF AIR COMPRESSOR POWER, AT THE AIR COMPRESSOR, PULL NEUTRAL FROM MCC-2. (1/6)

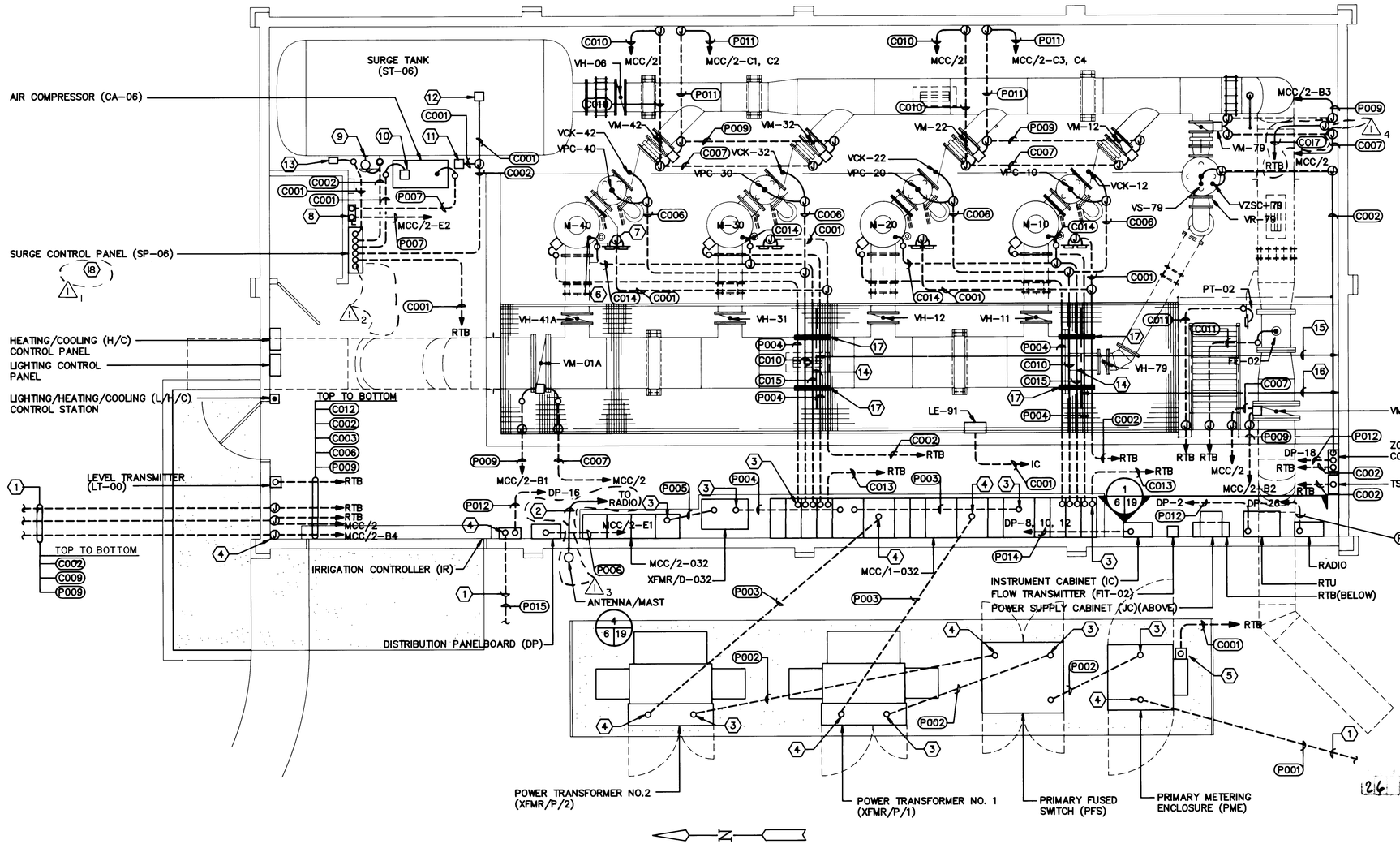

1/6 WATER SYSTEMS ELECTRICAL PLAN
SCALE: 1/4"=1'-0"

RECORD DRAWING
FEB 1992
These drawings have been revised based on field data and every reasonable attempt has been made to depict construction as actually performed

126 3337, 902692

8026.21GED1/G8026PWR

AS BUILT INFORMATION

CONTRACTOR		
WORK STAKED BY		DATE
INSPECTOR'S ACCEPTANCE BY		DATE
FIELD VERIFICATION BY		DATE
DRAWINGS CORRECTED BY		DATE

MICRO-FILM INFORMATION

RECORDED BY	DATE
NO.	

BENCH MARKS

SURVEY INFORMATION

FIELD NOTES

NO.	BY	DATE

ENGINEER'S SEAL

REVISIONS

NO.	DATE	REMARKS	BY
6	2-92	DESIGN	

DESIGNED BY D. DOZIER
DRAWN BY S. HAUGLAND
CHECKED BY B. GRIFFIS
DATE NOV. 9, 1990

CITY OF ALBUQUERQUE
PUBLIC WORKS DEPARTMENT
ENGINEERING GROUP

TITLE:
GUTIERREZ PUMP STATION RECONSTRUCTION
WATER SYSTEMS ELECTRICAL PLAN

APPROVALS	ENGINEER	DATE	APPROVALS	ENGINEER	DATE
DRC CHAIRMAN			WATER	R.W. Kane	11-13-90
TRANSPORTATION		11-16-90	WASTE WATER	R.W. Kane	11-13-90
HYDROLOGY		11-15-90			

PROJECT NO.	MAP NO.	SHEET	OF
3337.90	F-22	E6	19

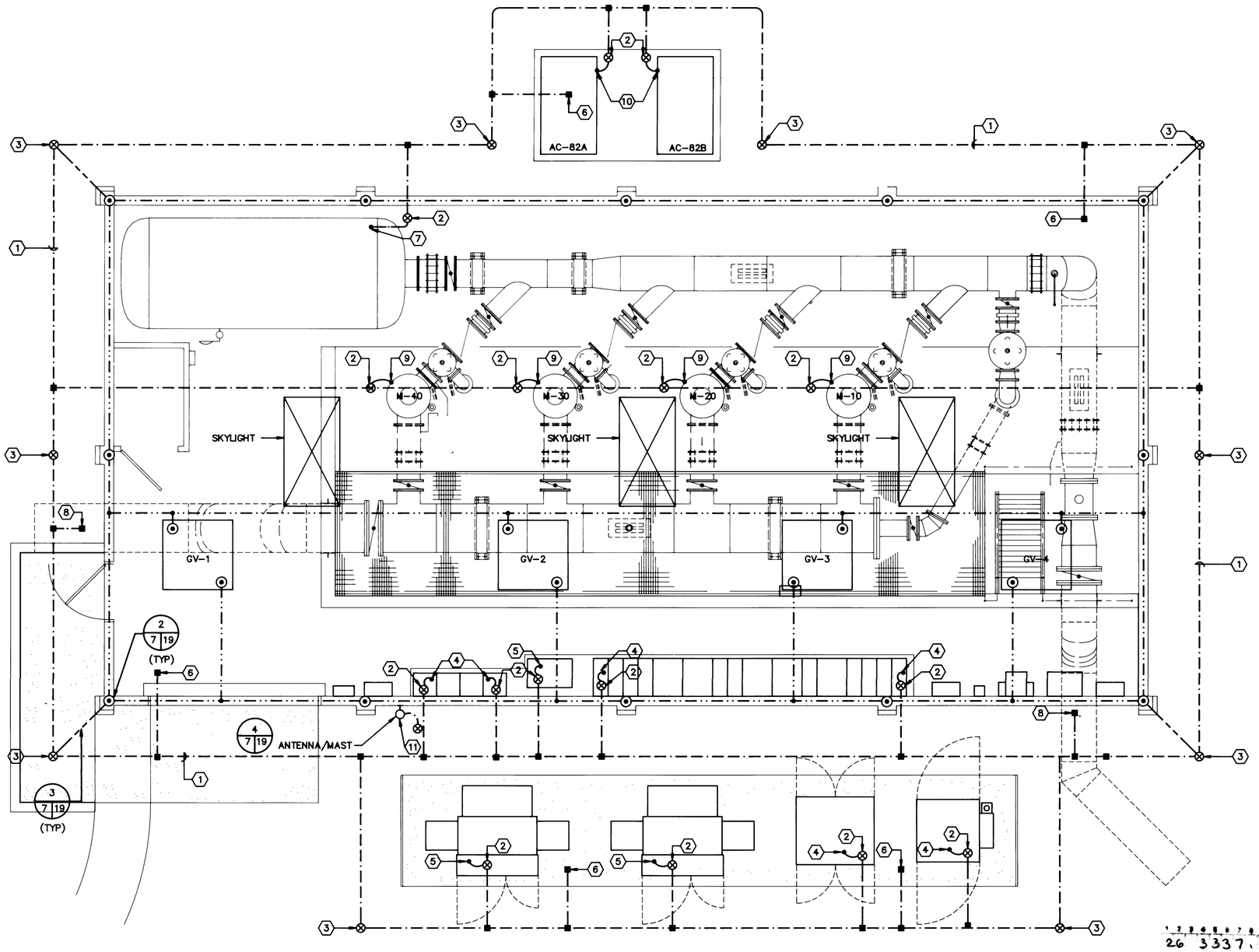

GENERAL NOTES

1 SEE SHEET E1 FOR SYMBOLS LEGEND AND ABBREVIATIONS LIST.

2 SEE SHEET E8 FOR SCHEDULES.

KEYED NOTES

1 LOCATE GROUND CONDUCTOR 2'-0" MINIMUM AND 4'-0" MAXIMUM FROM FOUNDATION (TYPICAL).

2 INSTALL GROUND ROD 0'-4" ABOVE FINISH SLAB OR HOUSEKEEPING PAD.

3 INSTALL GROUND ROD 2'-0" BELOW FINISH GRADE.

4 BOND GROUND ROD TO EQUIPMENT ENCLOSURE AND GROUND BUS (TYPICAL).

5 BOND GROUND ROD TO TRANSFORMER CASE AND SECONDARY NEUTRAL.

6 BOND TO SLAB REBAR.

7 BOND TO SURGE TANK SADDLE.

8 BOND TO STEEL WATER PIPE.

9 BOND TO BOOSTER PUMP CASING.

10 BOND TO EVAPORATIVE COOLER FRAME.

11 BOND RADIO ANTENNA TO GROUND ROD IN ACCORDANCE WITH REFERENCED DETAIL. PROVIDE LIGHTNING ARRESTOR ON RADIO COAXIAL CABLE IN ACCORDANCE WITH UL REQUIREMENTS.

1 2 3 4 5 6 7 8 9 10 11 12 13 14 15 16
26 3337.90 27 92

RECORD DRAWING
DATE FEB 1992
These drawings have been revised based on field data and every reasonable attempt has been made to depict construction as actually performed

1/7 GROUNDING/LIGHTNING PROTECTION SYSTEM PLAN
SCALE: 1/4"=1'-0"

AS BUILT INFORMATION

CONTRACTOR		
WORK STAKED BY		DATE
INSPECTOR'S ACCEPTANCE BY		DATE
FIELD VERIFICATION BY		DATE
DRAWINGS CORRECTED BY		DATE

MICRO-FILM INFORMATION

RECORDED BY	
DATE	
NO.	

BENCH MARKS

SURVEY INFORMATION

FIELD NOTES

NO.	BY	DATE

ENGINEER'S SEAL

DAVID A. DOZIER NEW MEXICO 9985 REGISTERED PROFESSIONAL ENGINEER

11-9-90

NO.	DATE	REMARKS	BY
		REVISIONS	
		DESIGN	

DESIGNED BY D. DOZIER DATE NOV. 9, 1990
DRAWN BY S. HAUGLAND
CHECKED BY B. GRIFFIS

8026210ED1/G8026GLP

CITY OF ALBUQUERQUE
PUBLIC WORKS DEPARTMENT
ENGINEERING GROUP

TITLE:
GUTIERREZ PUMP STATION RECONSTRUCTION
GROUNDING/LIGHTNING PROTECTION SYSTEM PLAN

APPROVALS	ENGINEER	DATE	APPROVALS	ENGINEER	DATE
DRC CHAIRMAN			WATER	R.W. Kane	11-13-90
TRANSPORTATION	N/A RHD	11-16-90	WASTE WATER	RW Kane	11-13-90
HYDROLOGY	LDM	11-15-90			

PROJECT NO. 3337.90 | MAP NO. F-22 | SHEET E7 OF 19

CONDUIT SCHEDULE
CONTROL CONDUIT/CONDUCTOR

CONDUIT NO.	CONDUIT SIZE	CONDUCTOR SIZE
C001	1"C	2#14, 1#14 GRD
C002	1"C	4#14, 1#14 GRD
C003	1"C	6#14, 1#14 GRD
C004	1"C	8#14, 1#14 GRD
C005	1"C	10#14, 1#14 GRD
C006	1"C	12#14, 1#14 GRD
C007	1"C	14#14, 1#14 GRD
C008	1"C	16#14, 1#14 GRD
C009	1"C	18#14, 1#14 GRD
C010	1"C	24#14, 1#14 GRD
C011	1"C	(1) FACTORY CABLE, 1#6 GRD
C012	1"C	(1) BELDEN #8719, 1#14 GRD
C013	1-1/4"C	(2) BELDEN #8719
		28#14, 1#14 GRD + 8#14 SPARE
C014	1-1/4"C	(1) BELDEN #8719
		(8) BELDEN #8770
		2#14, 1#14 GRD
C015	2"C	(2) BELDEN #8719
		(16) BELDEN #8770
		4#14, 1#14 GRD
C016	3"C	NOT IN CONTRACT
C017	1"C	14#14, 1#14 GRD

2

CONDUIT SCHEDULE
POWER CONDUIT/CONDUCTOR

CONDUIT NO.	CONDUIT SIZE	CONDUCTOR SIZE
P001	4"C	NOT IN CONTRACT
P002	4"C	3#1/0 15KV, 1#1/0 GRD
P003	4"C	3#2/0 15KV, 1#1/0 GRD
P004	2-1/2"C	3#8 5KV, 1#1/0 GRD
P005	2-1/2"C	4#4/0, 1#2 GRD
P006	1-1/4"C	4#2, 1#8 GRD
P007	1"C	3#8, 1#10 GRD
P008	1"C	2#10, 1#10 GRD
P009	1"C	3#10, 1#10 GRD
P010	1"C	5#10, 1#10 GRD
P011	1"C	6#10, 1#10 GRD
P012	1"C	2#12, 1#12 GRD
P013	1"C	3#12, 1#12 GRD
P014	1"C	4#12, 1#6 GRD
P015	1"C	SEE SPECIFICATION SECTION 02441

CONDUCTOR CALLOUT INDEX

2#14, 1#14 GRD
- QUANTITY
- EQUIPMENT GROUND
- AWG SIZE

(2) BELDEN #8719
- QUANTITY
- PART NO.
- BRAND

3#1/0, 15KV, 1#1/0 GRD
- QUANTITY
- EQUIPMENT GROUND
- VOLTAGE CLASS (600V UNLESS OTHERWISE NOTED)
- AWG SIZE

PANEL DP-033

208/120V, 3ø, 4 WIRE, 100A FRAME, MAIN LUGS ONLY, 42 CKT, SURFACE MOUNT, BOTTOM FEED, NEMA 12 ENCLOSURE, FRONT HINGED TO BOX.

CKT	BKR. RTNG.	LOAD DESCRIPTION	AMPERAGE LOAD ØA	ØB	ØC	LOAD DESCRIPTION	BKR. RTNG.	CKT
1	20A/1P	LIGHTS (RESTROOM)	0.8 / 2.0			RTU-033 (1)	20A/1P	2
3	20A/2P	LIGHTS (EXTERIOR)		1.7 / 0.0		SPARE	20A/1P	4
					1.7 / 2.0	LIGHTING CONTROL PANEL	15A/1P	6
7	20A/2P	LIGHTS (SUCTION PIT)	0.9 / 2.0			INSTRUMENT CABINET (IC-033)	20A/1P	8
				0.9 / 2.0		FLOW TRANSMITTER (FIT-033-02)	20A/1P	10
11	20A/2P	LIGHTS (HIGHBAY-WEST)			5.0 / 2.0	POWER SUPPLY CABINET (JC-033)	20A/1P	12
			5.0 / 2.0			HEATING/COOLING CONTROL PANEL	15A/1P	14
15	20A/2P	LIGHTS (HIGHBAY-MIDDLE/EAST)		9.1 / 2.0		IRRIGATION CONTROLLER (IR-033)	20A/1P	16
					9.1 / 2.0	ZONE TRANSFER VALVE (VS-033-79)	20A/1P	18
19	20A/1P (GFCI)	RECEPTACLES (SOUTH-WEST)	7.5 / 0.0			SPARE	20A/1P	20
21	20A/1P (GFCI)	RECEPTACLES (NORTH-EAST)		7.5 / 0.0		SPARE	15A/1P	22
23	20A/1P (GFCI)	RECEPTACLES (SUCTION PIT-WEST)			1.5 / 0.0	SPARE	20A/1P	24
25	20A/1P (GFCI)	RECEPTACLES (SUCTION PIT-EAST)	9.0 / 2.0			RADIO-033 (1)	20A/1P	26
27	20A/1P	GAS HEATER (GH-033-80A)		2.0 / 0.0		SPARE	20A/1P	28
29	20A/1P	GAS HEATER (GH-033-80B)			2.0 / 0.0	SPARE	20A/1P	30
31	20A/1P	GAS HEATER (GH-033-80C)	2.0 / 0.0			SPARE	20A/1P	32
33	20A/1P	GAS HEATER (GH-033-80D)		2.0 / 0.0		SPARE	20A/1P	34
35	20A/2P	ELECTRIC HEATER (EH-033-80)			4.8 / 0.0	SPARE	20A/2P	36
			0.8 / 2.0					
39	20A/1P	EXHAUST FAN (EF-033-81)		1.0 / 0.0		SPARE	20A/2P	40
41	20A/1P	SPARE			– / –			

(GFCI) = GROUND FAULT CIRCUIT INTERUPTER CIRCUIT BREAKER

1

GENERAL NOTES

1 SEE SHEET E1 FOR SYMBOLS LEGEND AND ABBREVIATIONS LIST.

KEYED NOTES

1 FEED RADIO AND RTU FROM SAME PHASE.

LIGHT FIXTURE SCHEDULE

TYPE	DESCRIPTION	LAMP	MOUNTING
A	HOLOPHANE BANT175MH-B25C-208V	(1) 175W M.H. CLEAR	PENDANT 16'-0" AFF TBOF
A/Q	SAME AS A WITH 250W QUARTZ STANDBY	(1) 175W M.H. CLEAR	PENDANT 16'-0" AFF TBOF
B	BENJAMIN CZW-2224-4-120V W/0° F BALLAST	(2) F40T12 CW	CEILING
C	BENJAMIN FA-2224-4R-208V W/0° F BALLAST, 208V	(2) F40T12 CW	CEILING
D	HID AREA LIGHT DEVICE B275-50HPS-208V	(1) 50W HPS CLEAR	WALL 17'-0" AFF TBOF

CITY FURNISHED EQUIPMENT SCHEDULE

DESCRIPTION	FURNISHED BY	INSTALLED BY	CONNECTED BY (NOTE 1)
REMOTE TERMINAL UNIT (RTU)	CITY	CONTRACTOR	CITY
RADIO	CITY	CONTRACTOR	CITY
RADIO ANTENNA	CITY	CONTRACTOR	CITY
RADIO COAXIAL CABLE	CITY	CONTRACTOR	CITY

NOTE 1: ELECTRICAL POWER AND/OR CONTROL WIRE CONNECTIONS.

A1 MCC/2-033 MOTOR CONTROL CENTER 120/208V, 3ø, 4W	B1 (MCU-01A) STATION SUCTION ISOLATION VALVE (VM-01A)	C1 (MCU-12) PUMP NO.1 DISCHARGE ISOLATION VALVE (VM-12)	D1 (MCU-82A1) EVAPORATIVE COOLER NO.1 (FAN) (AC-82A)	E1 (MCC/2-FDR/1) PANEL DP-033	
	B2 (MCU-02) STATION DISCHARGE ISOLATION VALVE (VM-02)	C2 (MCU-22) PUMP NO.2 DISCHARGE ISOLATION VALVE (VM-22)	D2 (MCU-82A2) EVAPORATIVE COOLER NO.1 (PUMP) (AC-82A)	E2 (MCC/2-FDR/2) AIR COMPRESSOR (CA-06)	
			D3 (MCU-82B1) EVAPORATIVE COOLER NO.2 (FAN) (AC-82B)	E3 (MCC/2-FDR/3) WELDER OUTLET	
MCC/2-033-MAIN MAIN CIRCUIT SWITCH	B3 (MCU-79) STATION ZONE TRANSFER ISOLATION VALVE (VM-79)	C3 (MCU-32) PUMP NO.3 DISCHARGE ISOLATION VALVE (VM-32)	D4 (MCU-82B2) EVAPORATIVE COOLER NO.2 (PUMP) (AC-82B)	E4 (MCC/2-FDR/4) OVERHEAD DOOR CONTROLLER	
A2 METERING			D5 (MCU-##) SPARE	E5 (MCC/2-FDR/5) SPARE	
A3 (MCU-##) SPARE	B4 (MCU-01B) STATION BY-PASS VALVE (VM-01B)	C4 (MCU-42) PUMP NO.4 DISCHARGE ISOLATION VALVE (VM-42)	D6 (MCU-##) SPARE	E6 (MCC/2-FDR/6) SPARE	
				E7 SPACE	

1/88 MOTOR CONTROL CENTER MCC/2-033 ELEVATION
NOT TO SCALE

RECORD DRAWING
Date FEB 1992
These drawings have been revised based on field data and every reasonable attempt has been made to depict construction as actually performed

AS BUILT INFORMATION
CONTRACTOR
WORK STAKED BY — DATE
INSPECTOR'S ACCEPTANCE BY — DATE
FIELD VERIFICATION BY — DATE
DRAWINGS CORRECTED BY — DATE
MICRO-FILM INFORMATION
RECORDED BY — DATE
NO.

BENCH MARKS

SURVEY INFORMATION
FIELD NOTES
NO. | BY | DATE

ENGINEER'S SEAL
ALBUQUERQUE, NEW MEXICO, 1985, REGISTERED, MARK A. DOZIER

NO.	DATE	REMARKS	BY
2	2-92	REVISIONS	

DESIGN
DESIGNED BY D. DOZIER — DATE NOV. 9, 1990
DRAWN BY K. TYLER
CHECKED BY B. GRIFFIS

802821GED1/GCONSCH

CITY OF ALBUQUERQUE
PUBLIC WORKS DEPARTMENT
ENGINEERING GROUP

TITLE: GUTIERREZ PUMP STATION RECONSTRUCTION SCHEDULES

APPROVALS	ENGINEER	DATE	APPROVALS	ENGINEER	DATE
DRC CHAIRMAN	Roger L. Mason	11/16/90	WATER	R.W. Kane	11-13-90
TRANSPORTATION	N/A RHD	11-16-90	WASTE WATER	R.W. Kane	11-13-90
HYDROLOGY	LDM	11-15-90			

PROJECT NO. 3337.90 | MAP NO. F-22 | SHEET E8 OF 19

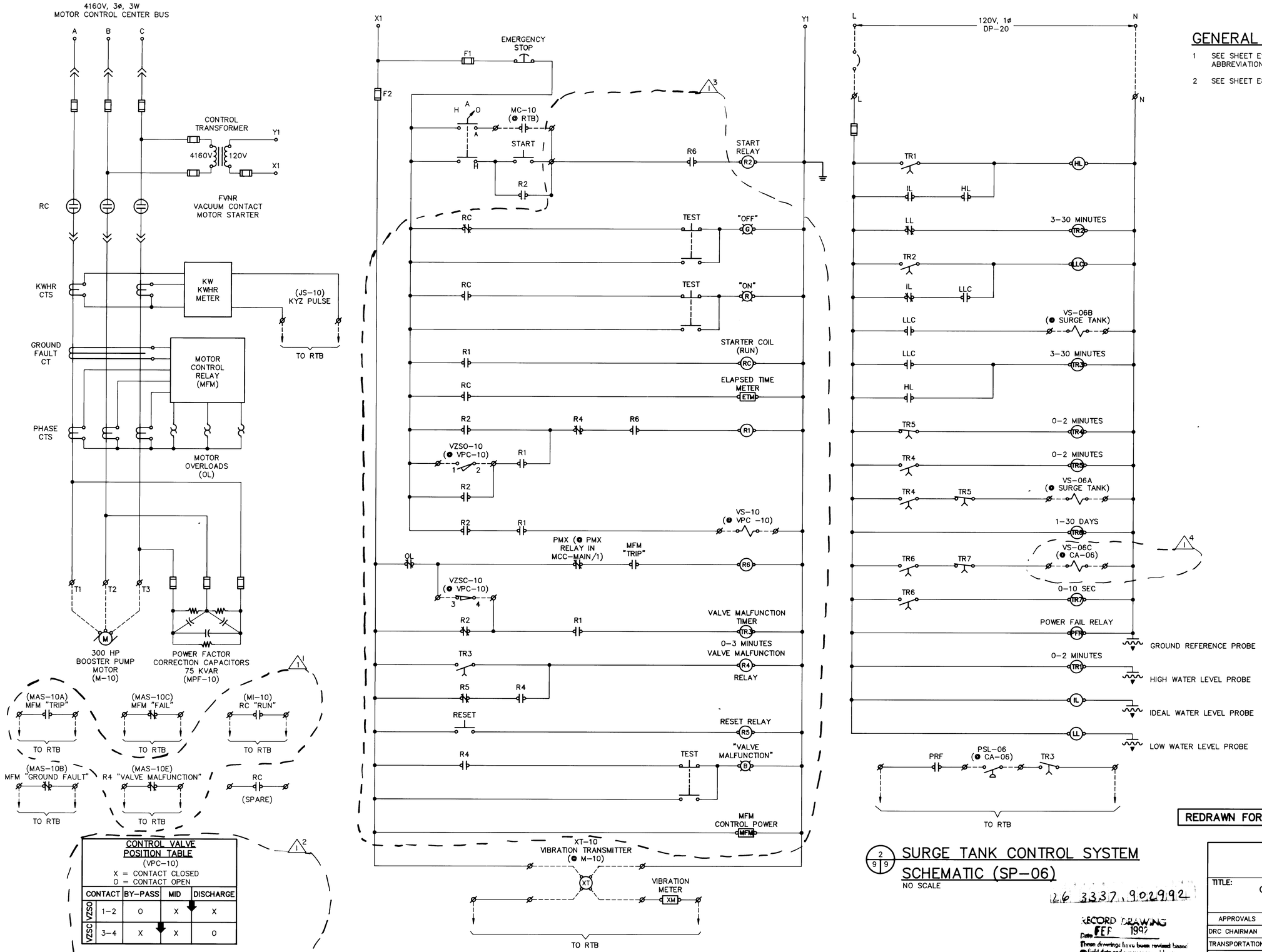

1 9 9 BOOSTER PUMP NO. 1 SCHEMATIC (MCU-10)
NO SCALE
(SIMILAR FOR MCU-20, MCU-30, MCU-40)

2 9 9 SURGE TANK CONTROL SYSTEM SCHEMATIC (SP-06)
NO SCALE

GENERAL NOTES

1 SEE SHEET E1 FOR SYMBOLS LEGEND AND ABBREVIATIONS LIST.

2 SEE SHEET E8 FOR SCHEDULES.

26 3337.902992

RECORD DRAWING
Date JEF 1997
These drawings have been revised based on field data and every reasonable attempt has been made to depict construction as actually performed

REDRAWN FOR RECORD PURPOSES

GLADDER/B02621GED1

AS BUILT INFORMATION

CONTRACTOR	MCC	
WORK STAKED BY	ALB. SVY.	DATE 2/92
INSPECTORS ACCEPTANCE BY	LH	DATE 12/19/91
FIELD VERIFICATION BY	LH	DATE 12/91
DRAWINGS CHANGED BY	LH	DATE 2/92

MICRO-FILM INFORMATION

RECORDED BY	DATE
NO.	

BENCH MARKS

SURVEY INFORMATION

NO.	BY	DATE

FIELD NOTES

ENGINEER'S SEAL

NO.	DATE	REMARKS
2	2-92	SCHEMATIC REVISION

REVISIONS

	BY
DESIGN	LH
DESIGNED BY	D. DOZIER
DRAWN BY	P. STRINEL
CHECKED BY	B. GRIFFIS

DATE NOV. 9, 1990

CITY OF ALBUQUERQUE
PUBLIC WORKS DEPARTMENT
ENGINEERING GROUP

TITLE: GUTIERREZ PUMP STATION RECONSTRUCTION
CONTROL SCHEMATICS

APPROVALS	ENGINEER	DATE	APPROVALS	ENGINEER	DATE
DRC CHAIRMAN			WATER		
TRANSPORTATION			WASTE WATER		
HYDROLOGY					

PROJECT NO. 3337.90 | MAP NO. F-22 | SHEET E9 OF 19

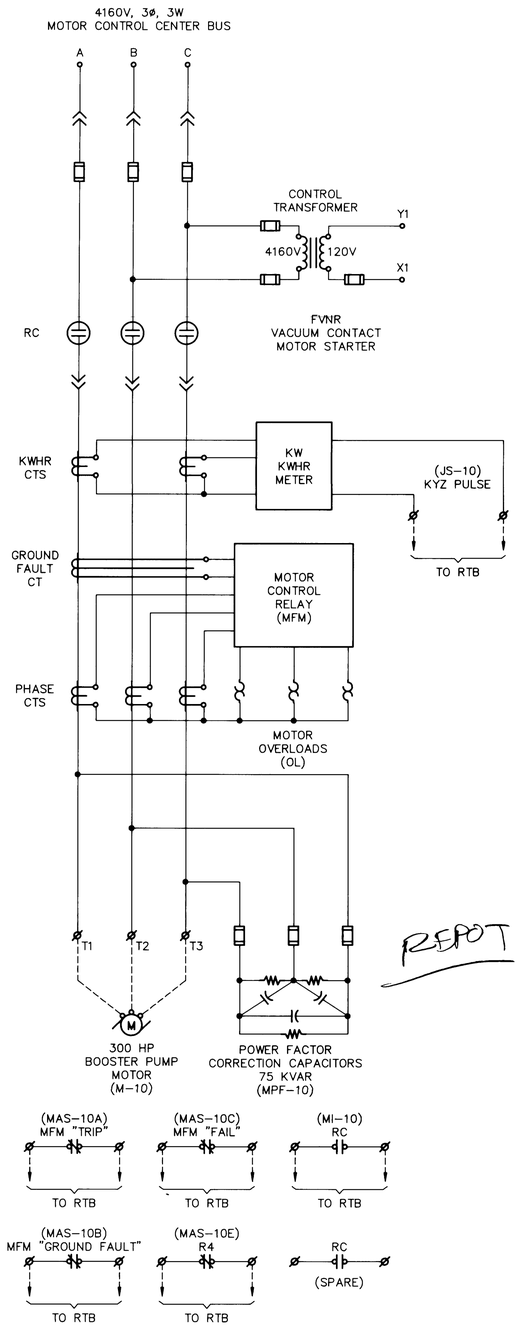

REPOT

CHECK VALVE POSITION TABLE (VCK-12) X = CONTACT CLOSED O = CONTACT OPEN				
CONTACT		CLOSE	MID	OPEN
VZSC	5-6	O	X	X
VZSO	7-8	X	X	O
VZSC	9-10	X	O	O

CONTROL VALVE POSITION TABLE (VPC-10) X = CONTACT CLOSED O = CONTACT OPEN				
CONTACT		CLOSE	MID	OPEN
VZSO	1-2	O	O	X
VZSC	3-4	O	X	X

NOTE:
PUMP CONTROL VALVE OPEN
CHECK VALVE CLOSED

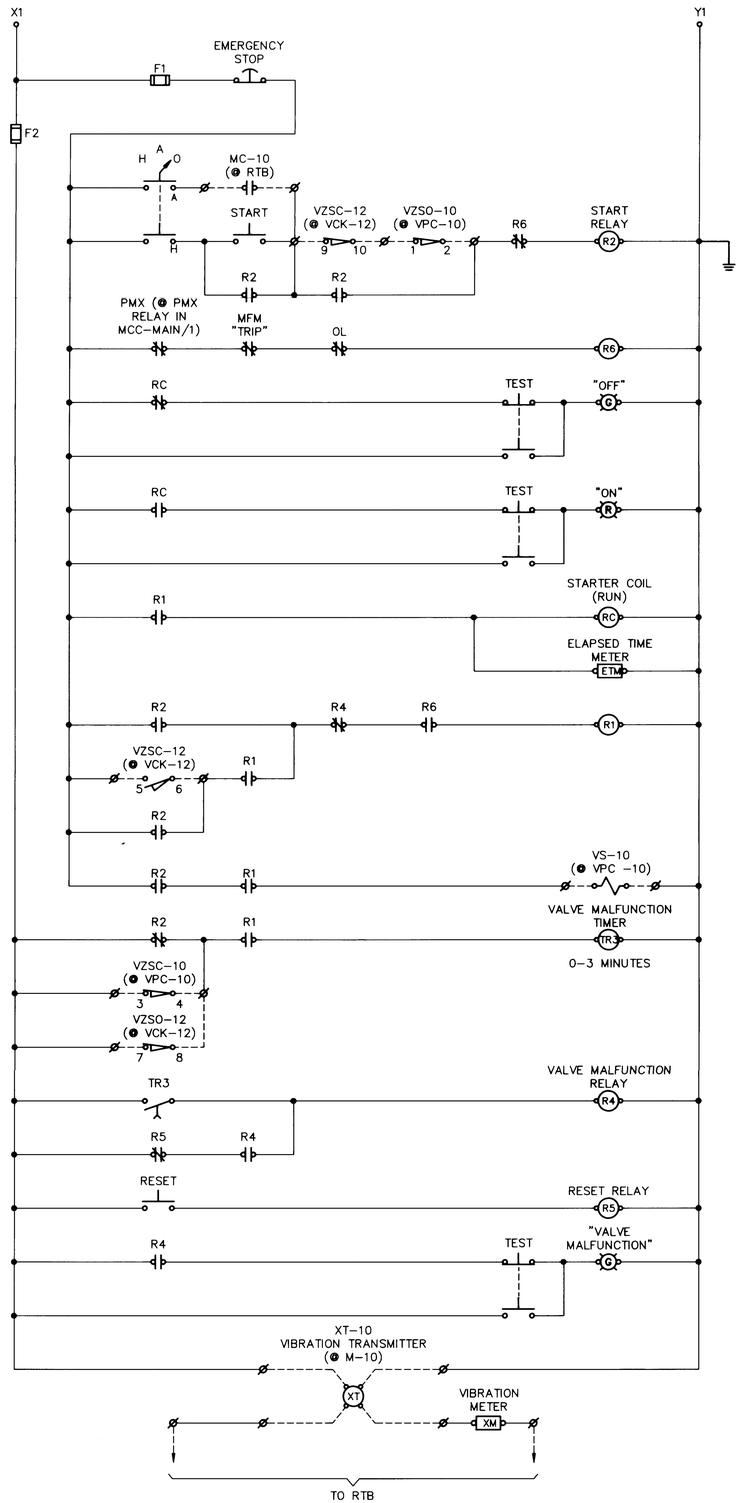

1 | 9 9 BOOSTER PUMP NO. 1 SCHEMATIC (MCU-10)
NO SCALE
(SIMILAR FOR MCU-20, MCU-30, MCU-40)

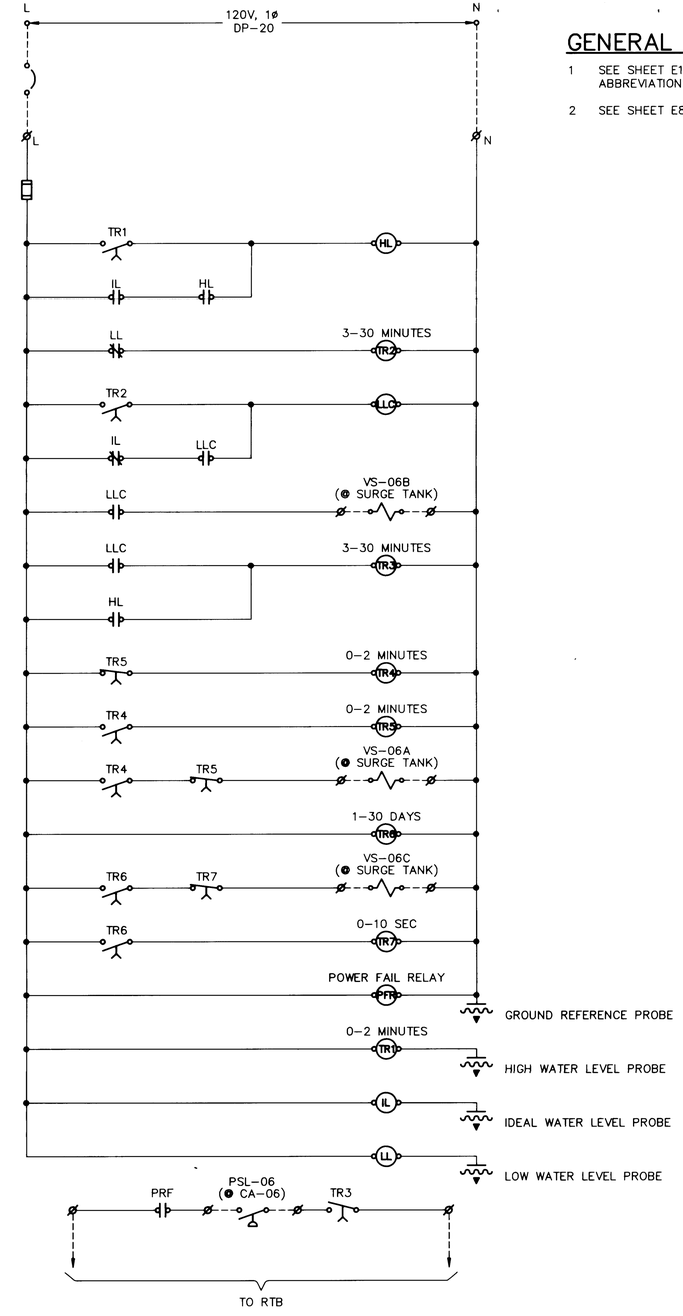

2 | 9 9 SURGE TANK CONTROL SYSTEM SCHEMATIC (SP-06)
NO SCALE

GENERAL NOTES

1 SEE SHEET E1 FOR SYMBOLS LEGEND AND ABBREVIATIONS LIST.

2 SEE SHEET E8 FOR SCHEDULES.

26 3337.903092

THIS SHEET SUPERSEDED BY SIMILAR SHEET MARKED "REDRAWN FOR RECORD PURPOSES"

AS BUILT INFORMATION

		DATE
CONTRACTOR		
WORK STAKED BY		
INSPECTOR'S ACCEPTANCE BY		DATE
FIELD VERIFICATION BY		DATE
DRAWINGS CORRECTED BY		DATE

MICRO-FILM INFORMATION

RECORDED BY	DATE
NO.	

BENCH MARKS

SURVEY INFORMATION

FIELD NOTES

NO.	BY	DATE

ENGINEER'S SEAL

NO.	DATE	REMARKS	BY

REVISIONS

DESIGN

DESIGNED BY D. DOZIER DATE NOV. 9, 1990
DRAWN BY P. STRINEL
CHECKED BY B. GRIFFIS

GLADDER/B026621GED1

CITY OF ALBUQUERQUE
PUBLIC WORKS DEPARTMENT
ENGINEERING GROUP

TITLE: GUTIERREZ PUMP STATION RECONSTRUCTION
CONTROL SCHEMATICS

APPROVALS	ENGINEER	DATE	APPROVALS	ENGINEER	DATE
DRC CHAIRMAN		11/16/90	WATER	R.W. Kane	11-13-90
TRANSPORTATION		11-16-90	WASTE WATER	R.W. Kane	11-13-90
HYDROLOGY		11-15-90			

PROJECT NO. 3337.90 MAP NO. F-22 SHEET E9 OF 19

GENERAL NOTES

1. SEE SHEET E1 FOR SYMBOLS LEGEND AND ABBREVIATIONS LIST.
2. SEE SHEET E8 FOR SCHEDULES.

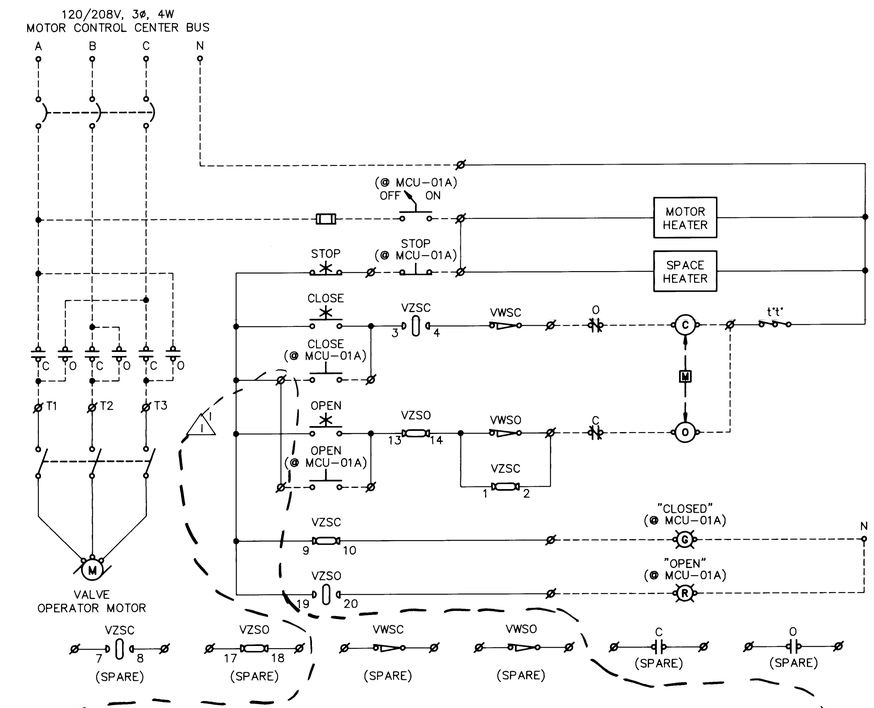

1/10|10 STATION SUCTION ISOLATION VALVE SCHEMATIC (VM-01A)
NO SCALE (SIMILAR FOR BOOSTER PUMP DISCHARGE ISOLATION VALVES VM-12, VM-22, VM-32, AND VM-42)
(SIMILAR FOR STATION DISCHARGE ISOLATION VALVE VM-02)

ISOLATION VALVES POSITION TABLE

X = CONTACT CLOSED
O = CONTACT OPEN

	CONTACT	CLOSE	MID	OPEN
VZSC	1-2	X	O	O
	3-4	O	X	X
	7-8	O	X	X
	9-10	X	X	O
VZSO	13-14	X	X	O
	17-18	X	X	O
	19-20	O	X	X

NOTE: ISOLATION VALVES SHOWN IN CLOSED POSITION

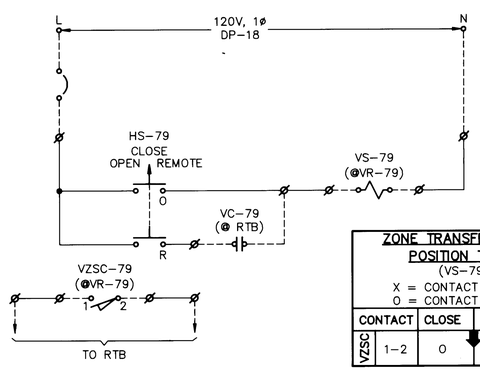

ZONE TRANSFER VALVE POSITION TABLE
(VS-79)
X = CONTACT CLOSED
O = CONTACT OPEN

	CONTACT	CLOSE	MID	OPEN
VZSC	1-2	O	X	X

3/10|10 ZONE TRANSFER VALVE SCHEMATIC (VS-79)
NO SCALE

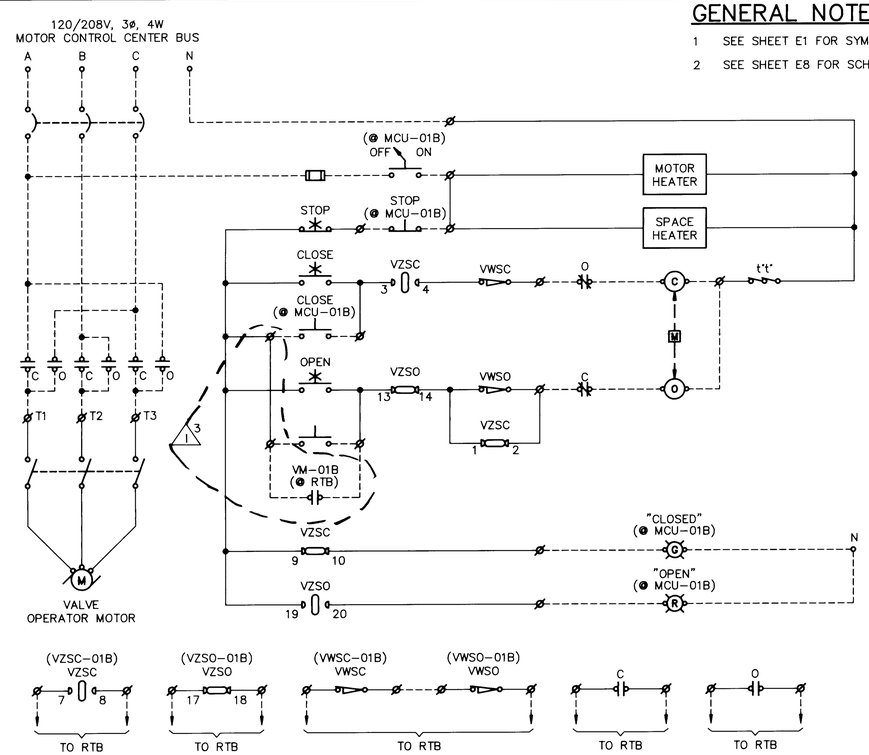

2/10|10 STATION BY-PASS VALVE SCHEMATIC (VM-01B)
NO SCALE

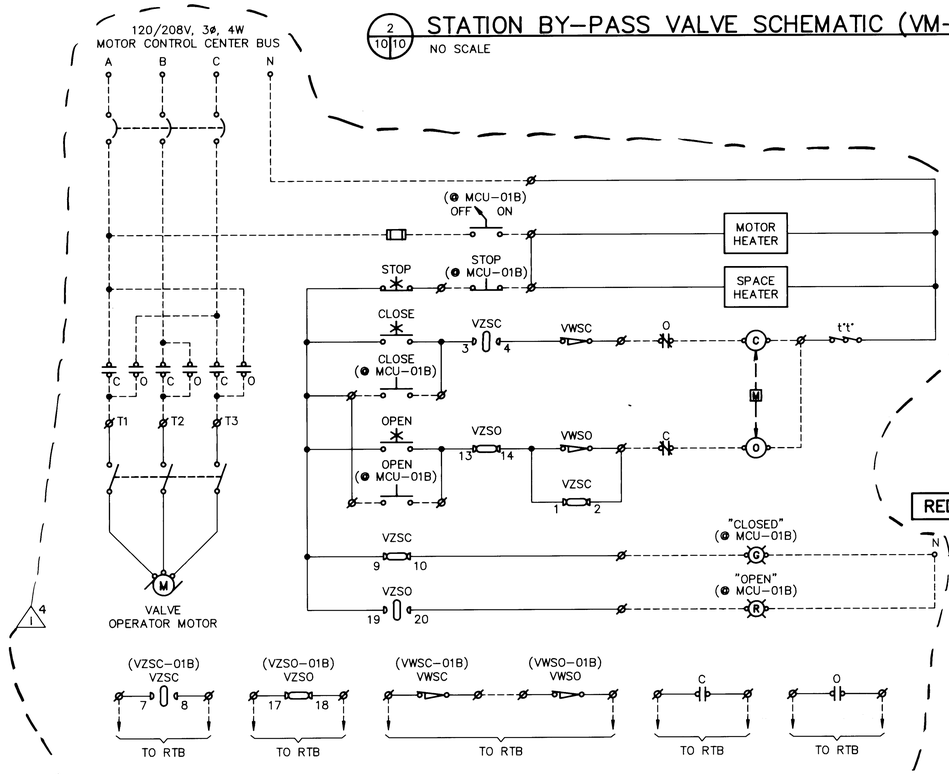

4/10|10 ZONE TRANSFER ISOLATION VALVE SCHEMATIC (VM-79)
NO SCALE

RECORD DRAWING
Date FEB 1997
These drawings have been revised based on field data and every reasonable attempt has been made to depict construction as actually performed

REDRAWN FOR RECORD PURPOSES

26 3337.903/92
802621GED1/GCNTL1

AS BUILT INFORMATION

CONTRACTOR	MCC	
WORK STAKED BY	ALB. SVY.	DATE 2/92
INSPECTOR'S ACCEPTANCE		DATE 12/19/91
FIELD VERIFICATION BY	LH	DATE 12/91
DRAWINGS CORRECTED BY	LH	DATE 2/92

MICRO-FILM INFORMATION
RECORDED BY DATE
NO.

BENCH MARKS

SURVEY INFORMATION
FIELD NOTES

NO.	BY	DATE

ENGINEER'S SEAL

NO.	DATE	REMARKS	BY
1	2-92	SCHEMATIC REVISION	LH

REVISIONS

DESIGNED BY D. DOZIER
DRAWN BY P. SCHMITTLE
CHECKED BY B. GRIFFIS
DATE NOV. 9, 1990

CITY OF ALBUQUERQUE
PUBLIC WORKS DEPARTMENT
ENGINEERING GROUP

TITLE: GUTIERREZ PUMP STATION RECONSTRUCTION
CONTROL SCHEMATICS

APPROVALS	ENGINEER	DATE	APPROVALS	ENGINEER	DATE
DRC CHAIRMAN			WATER		
TRANSPORTATION			WASTE WATER		
HYDROLOGY					

PROJECT NO. 3337.90 | MAP NO. F-22 | SHEET E10 OF 19

GENERAL NOTES

1 SEE SHEET E1 FOR SYMBOLS LEGEND AND ABBREVIATIONS LIST.

2 SEE SHEET E8 FOR SCHEDULES.

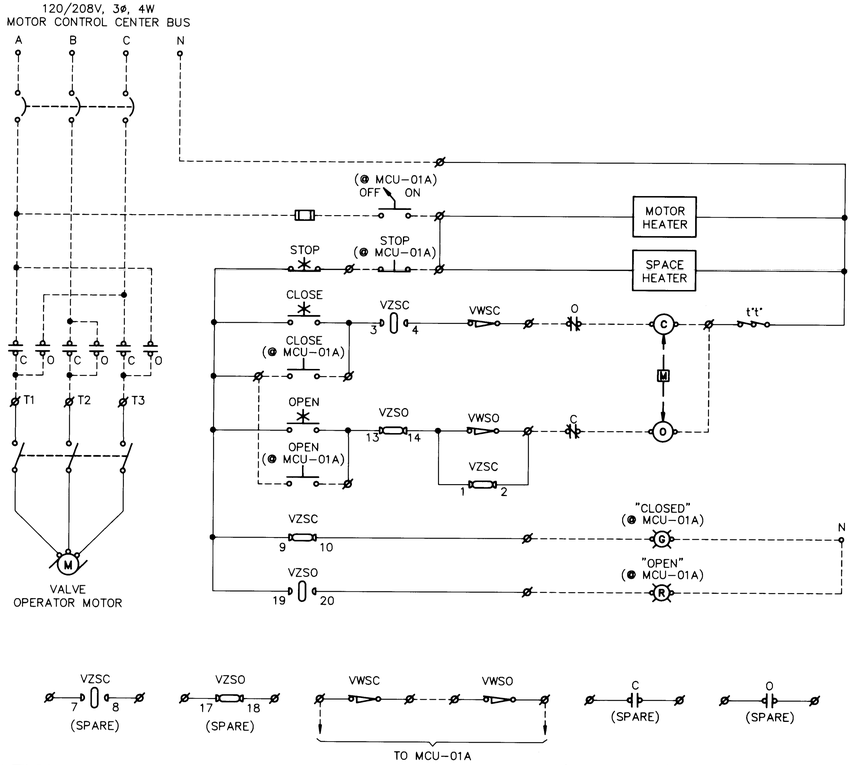

1/10 10 STATION SUCTION ISOLATION VALVE SCHEMATIC (VM-01A)

NO SCALE (SIMILAR FOR BOOSTER PUMP DISCHARGE ISOLATION VALVES VM-10, VM-20, VM-30, AND VM-40)
(SIMILAR FOR STATION DISCHARGE ISOLATION VALVE VM-02)
(SIMILAR FOR ZONE TRANSFER ISOLATION VALVE VM-79)

ISOLATION VALVES POSITION TABLE

X = CONTACT CLOSED
O = CONTACT OPEN

	CONTACT	CLOSE	MID	OPEN
VZSC	1–2	X	O	O
	3–4	O	X	X
	7–8	O	X	X
	9–10	X	X	O
VZSO	13–14	X	X	O
	17–18	X	X	O
	19–20	O	X	X

NOTE: ISOLATION VALVES SHOWN IN CLOSED POSITION

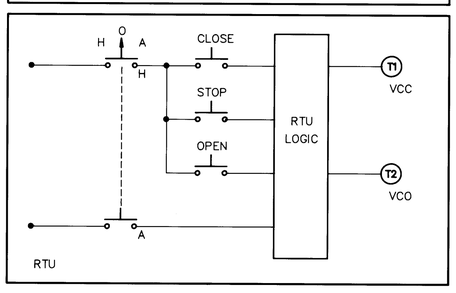

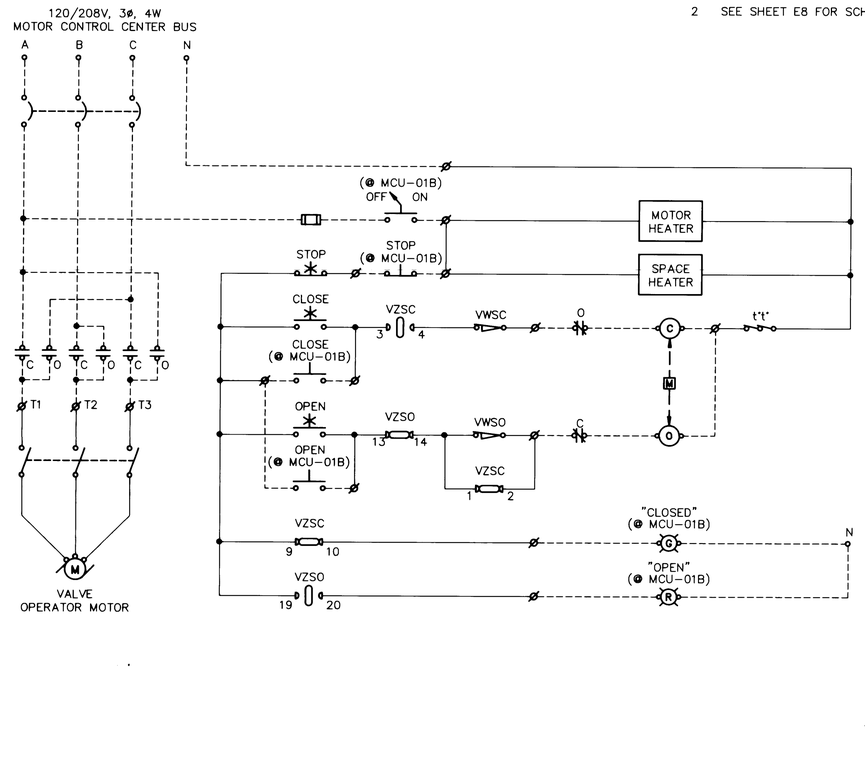

2/10 10 STATION BY-PASS VALVE SCHEMATIC (VM-01B)

NO SCALE

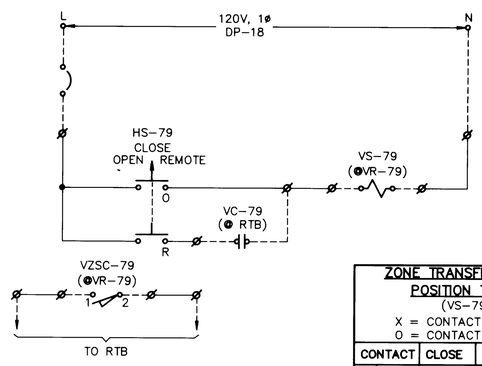

ZONE TRANSFER VALVE POSITION TABLE
(VS-79)

X = CONTACT CLOSED
O = CONTACT OPEN

	CONTACT	CLOSE	MID	OPEN
VZSC	1–2	O	X	X

3/10 10 ZONE TRANSFER VALVE SCHEMATIC (VS-79)

NO SCALE

REPLOT

26 3337-90 3292

THIS SHEET SUPERSEDED BY SIMILAR SHEET MARKED "REDRAWN FOR RECORD PURPOSES"

AS BUILT INFORMATION

CONTRACTOR DATE
WORK STAKED BY DATE
INSPECTOR'S ACCEPTANCE BY DATE
FIELD VERIFICATION BY DATE
DRAWINGS CORRECTED BY DATE

MICRO-FILM INFORMATION

RECORDED BY DATE
NO.

BENCH MARKS

SURVEY INFORMATION

FIELD NOTES

NO.	BY	DATE

ENGINEER'S SEAL

NO.	DATE	REMARKS	BY
		REVISIONS	

DESIGNED BY D. DOZIER DATE NOV. 9, 1990
DRAWN BY P. SCHMITTLE
CHECKED BY B. GRIFFIS

802621GED1/GCNTL1

CITY OF ALBUQUERQUE
PUBLIC WORKS DEPARTMENT
ENGINEERING GROUP

TITLE: GUTIERREZ PUMP STATION RECONSTRUCTION
CONTROL SCHEMATICS

APPROVALS	ENGINEER	DATE	APPROVALS	ENGINEER	DATE
DRC CHAIRMAN	[illegible]	11/16/90	WATER	R.W. Kane	11-13-90
TRANSPORTATION	N/A	11-16-90	WASTE WATER	R.W. Kane	11-13-90
HYDROLOGY	[illegible]	11-15-90			

PROJECT NO. 3337.90 MAP NO. F-22 SHEET E10 OF 19

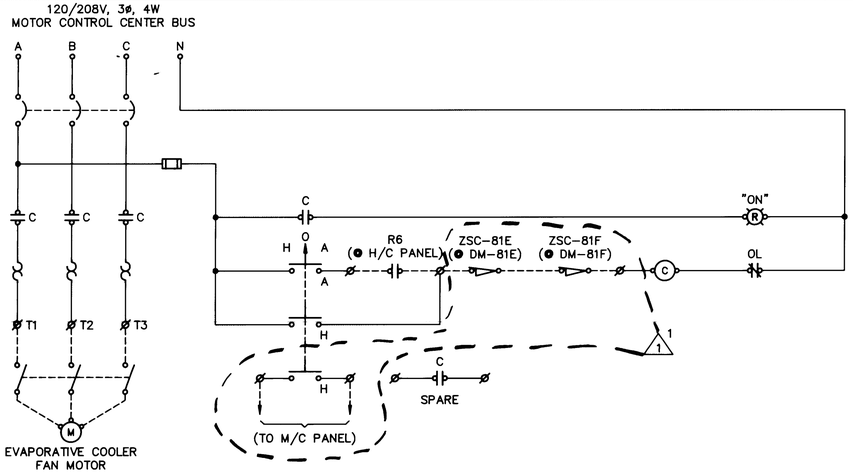

1 / 11 11 EVAPORATIVE COOLER FAN SCHEMATIC
NO SCALE (TYPICAL FOR MCU-82A1 AND MCU-82B1)

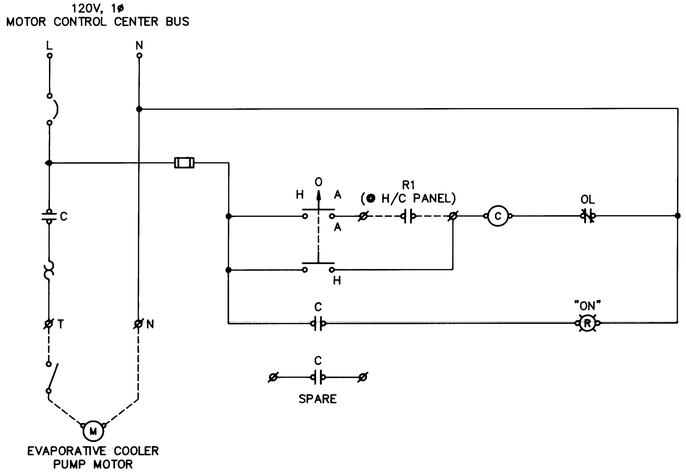

2 / 11 11 EVAPORATIVE COOLER PUMP SCHEMATIC
NO SCALE (TYPICAL FOR MCU-82A2 AND MCU-82B2)

GENERAL NOTES

1 SEE SHEET E1 FOR SYMBOLS LEGEND AND ABBREVIATIONS LIST.

2 SEE SHEET E8 FOR SCHEDULES.

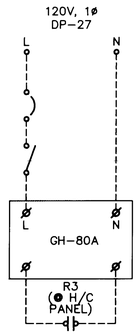

5 / 11 11 GAS HEATER NO. 1 SCHEMATIC (GH-80A)
NO SCALE (SIMILAR FOR GH-80B, GH-80C, AND GH-80D)

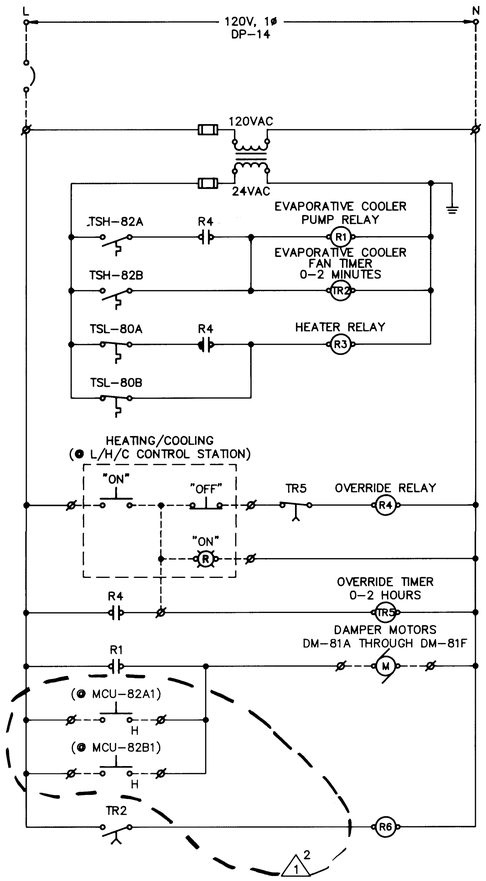

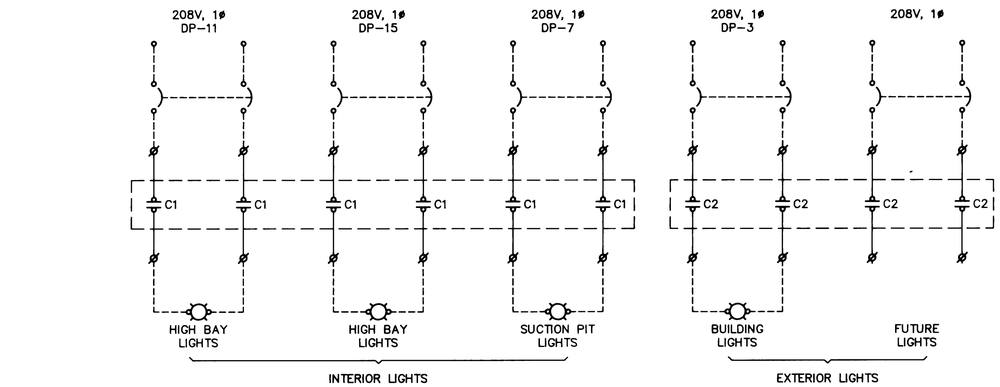

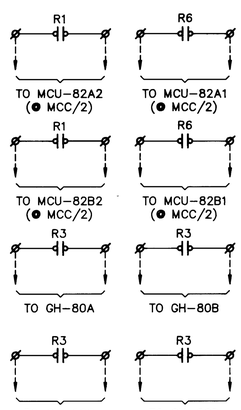

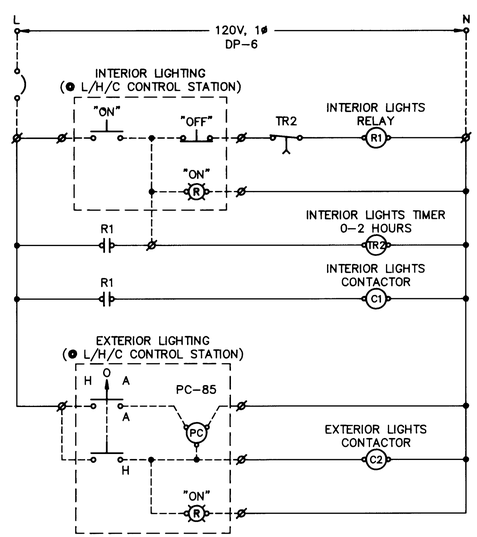

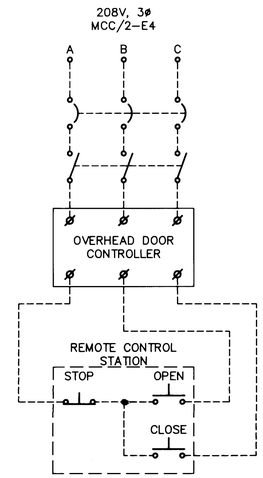

6 / 11 11 OVERHEAD DOOR CONTROLLER SCHEMATIC
NO SCALE

3 / 4 11 / 5 HEATING/COOLING (H/C) CONTROL PANEL SCHEMATIC
NO SCALE

4 / 4 11 / 5 LIGHTING CONTROL PANEL SCHEMATIC
NO SCALE

REDRAWN FOR RECORD PURPOSES

RECORD DRAWING
Date FEB 1992
These drawings have been revised based on field data and every reasonable effort has been made to depict construction as actually performed.

26 3337.903392

AS BUILT INFORMATION
CONTRACTOR MCC DATE 2/92
SURVEY STAKED BY ALB. SVY. DATE 12/19/91
INSPECTOR'S ACCEPTANCE BY LH DATE 12/91
FIELD VERIFICATION BY LH DATE 2/92
MARKS CORRECTED BY LH DATE 2/92
MICRO-FILM INFORMATION
RECORDED BY DATE
NO.

BENCH MARKS

SURVEY INFORMATION
FIELD NOTES
NO. BY DATE

ENGINEER'S SEAL

NO.	DATE	REMARKS	BY
2	1-92	DAMPER LIMIT SWITCH CHANGES	LH

REVISIONS

DESIGNED BY D. DOZIER
DRAWN BY P. STRINEL
CHECKED BY B. GRIFFIS
DESIGN DATE NOV. 9, 1990

8026216ED1/G8026E13

CITY OF ALBUQUERQUE
PUBLIC WORKS DEPARTMENT
ENGINEERING GROUP

TITLE: GUTIERREZ PUMP STATION RECONSTRUCTION
CONTROL SCHEMATICS

APPROVALS	ENGINEER	DATE	APPROVALS	ENGINEER	DATE
DRC CHAIRMAN			WATER		
TRANSPORTATION			WASTE WATER		
HYDROLOGY					

PROJECT NO. 3337.90 MAP NO. F-22 SHEET E11 OF 19

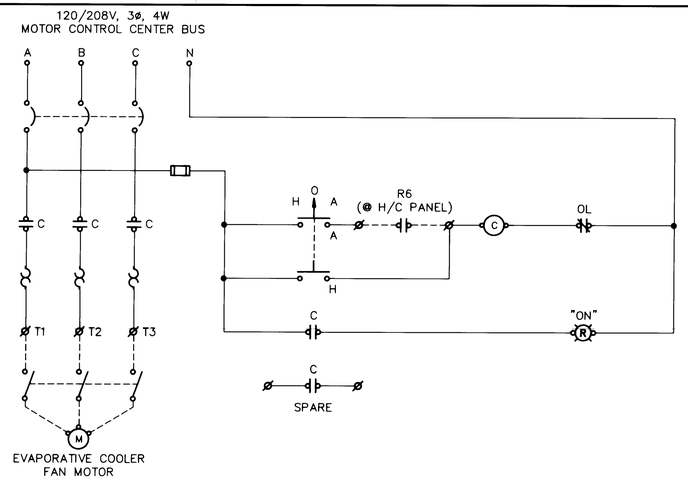

1 | 11 | 11 EVAPORATIVE COOLER FAN SCHEMATIC
NO SCALE (TYPICAL FOR MCU-82A1 AND MCU-82B1)

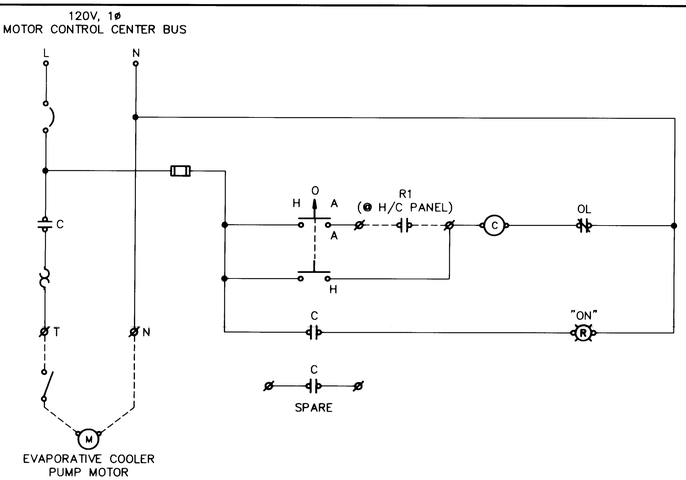

2 | 11 | 11 EVAPORATIVE COOLER PUMP SCHEMATIC
NO SCALE (TYPICAL FOR MCU-82A2 AND MCU-82B2)

GENERAL NOTES

1 SEE SHEET E1 FOR SYMBOLS LEGEND AND ABBREVIATIONS LIST.

2 SEE SHEET E8 FOR SCHEDULES.

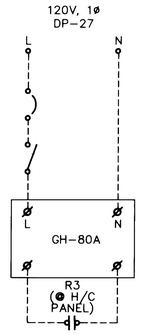

5 | 11 | 11 GAS HEATER NO. 1 SCHEMATIC (GH-80A)
NO SCALE (SIMILAR FOR GH-80B, GH-80C, AND GH-80D)

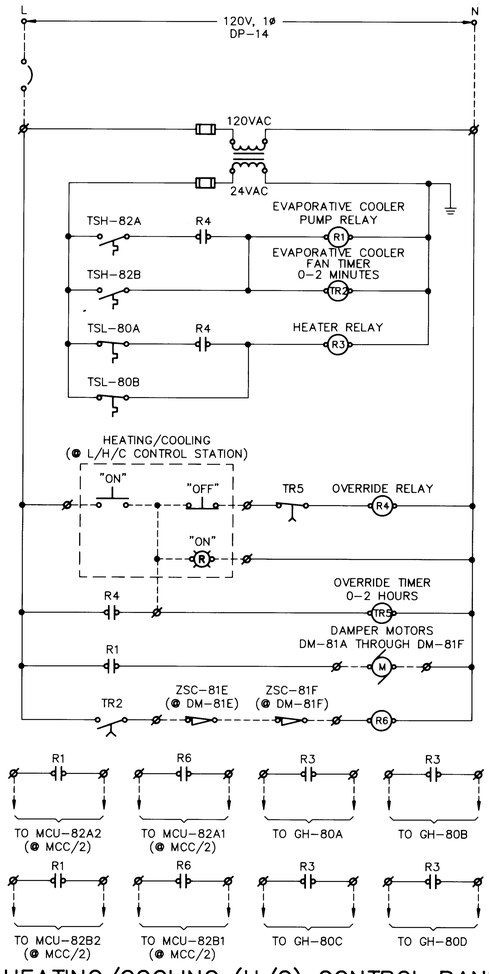

3 | 4 | 11 | 5 HEATING/COOLING (H/C) CONTROL PANEL SCHEMATIC
NO SCALE

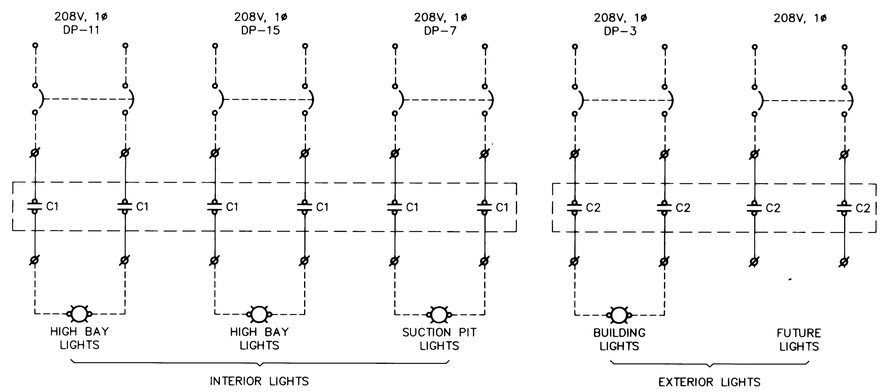

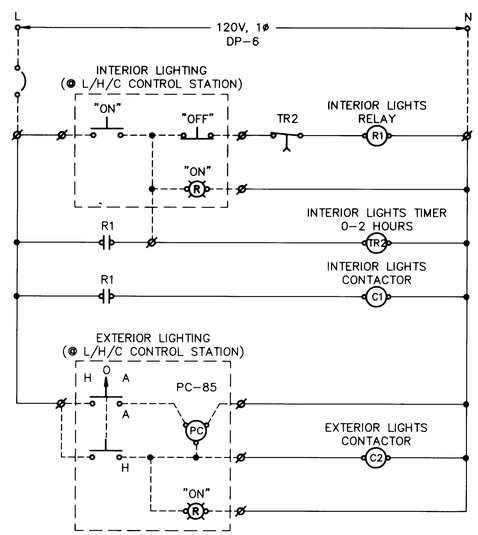

4 | 4 | 11 | 5 LIGHTING CONTROL PANEL SCHEMATIC
NO SCALE

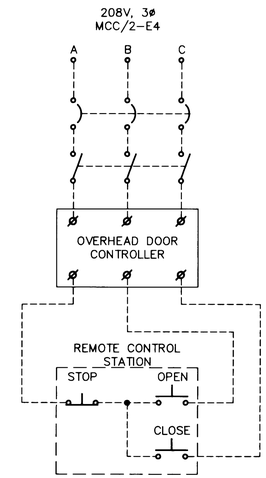

6 | 11 | 11 OVERHEAD DOOR CONTROLLER SCHEMATIC
NO SCALE

REPLOT

26 3337. 903492

THIS SHEET SUPERSEDED BY SIMILAR SHEET MARKED "REDRAWN FOR RECORD PURPOSES"

AS BUILT INFORMATION

		DATE
CONTRACTOR		
WORK STAKED BY		
INSPECTOR'S ACCEPTANCE BY		
FIELD VERIFICATION BY		
DRAWINGS CORRECTED BY		

MICRO-FILM INFORMATION

	DATE
RECORDED BY	
NO.	

BENCH MARKS

SURVEY INFORMATION

FIELD NOTES

NO.	BY	DATE

ENGINEER'S SEAL

NO.	DATE	REMARKS	BY
		REVISIONS	

DESIGN

DESIGNED BY D. DOZIER DATE NOV. 9, 1990
DRAWN BY P. STRINEL
CHECKED BY B. GRIFFIS

802621GED1/G8026E13

CITY OF ALBUQUERQUE
PUBLIC WORKS DEPARTMENT
ENGINEERING GROUP

TITLE: GUTIERREZ PUMP STATION RECONSTRUCTION
CONTROL SCHEMATICS

APPROVALS	ENGINEER	DATE	APPROVALS	ENGINEER	DATE
DRC CHAIRMAN	Roger Thoa	11/16/90	WATER	R.W. Kane	11-13-90
TRANSPORTATION	N/A RHD	11-16-90	WASTE WATER	R.W. Kane	11-13-90
HYDROLOGY	Lowe	11-15-90			

PROJECT NO. 3337.90 MAP NO. F-22 SHEET E11 OF 19

GENERAL NOTES

1. SEE SHEET E-1 FOR SYMBOLS LEGEND AND ABBREVIATIONS LIST.
2. SEE SHEET E-8 FOR SCHEDULES.
3. REPLACE "##" AND "#-#" WITH ACTUAL TERMINAL ASSIGNMENTS BASED ON MANUFACTURERS SHOP DRAWINGS (TYPICAL).

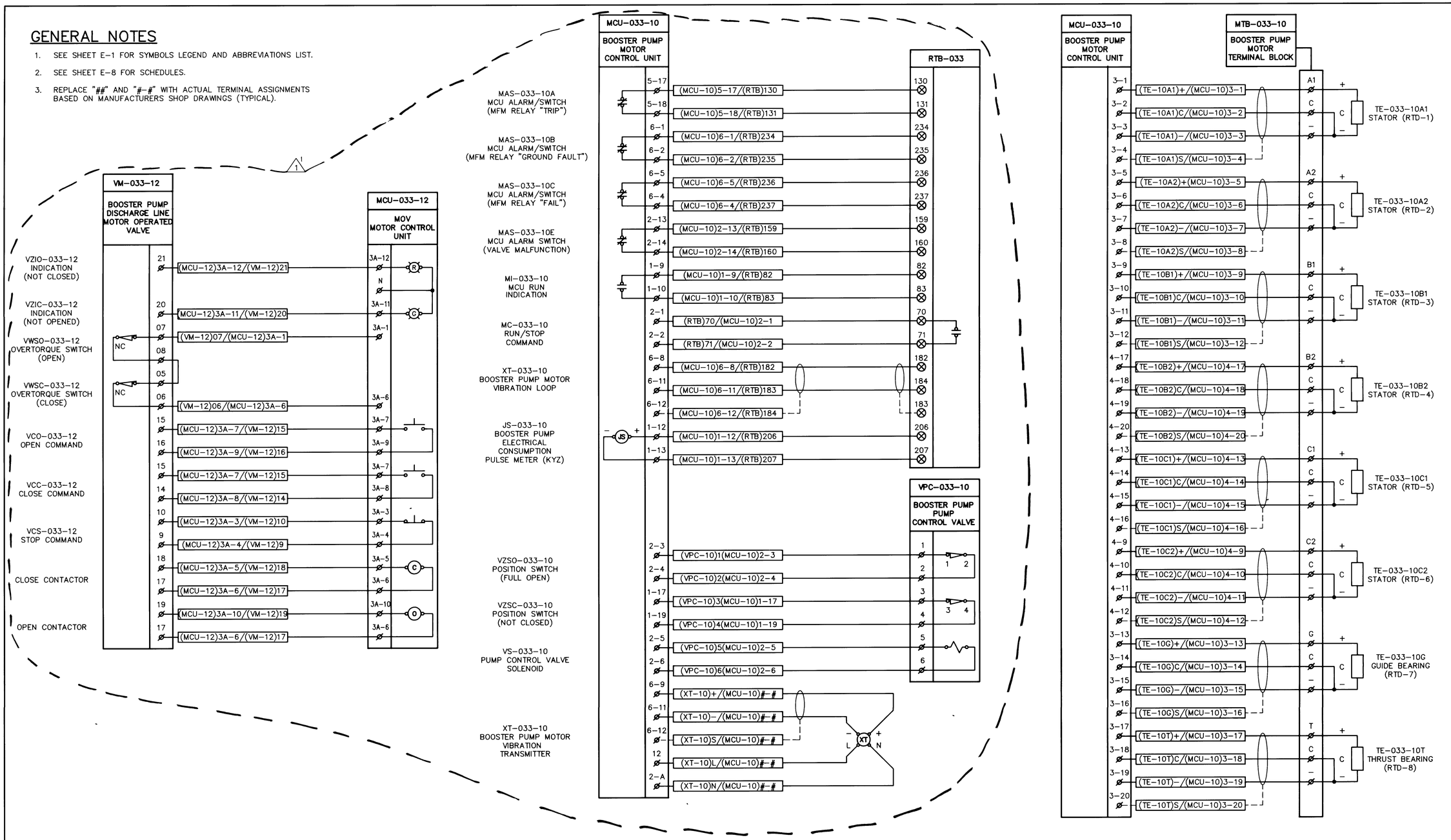

REDRAWN FOR RECORD PURPOSES

G8026E14/8026.21GED2

26 3337.903592

RECORD DRAWING
Date FEB 1992
These drawings have been revised based on field data and every reasonable effort has been made to depict construction as-built performed

AS BUILT INFORMATION	
CONTRACTOR	MCC
WORK STAKED BY	ALB. SVY. DATE 2/92
INSPECTOR ACCEPTANCE BY	LH DATE 12/19/91
FIELD VERIFICATION BY	LH DATE 12/91
DRAWINGS CORRECTED BY	LH DATE 2/92

MICRO-FILM INFORMATION
RECORDED BY DATE
NO.

BENCH MARKS

SURVEY INFORMATION
FIELD NOTES
NO. BY DATE

ENGINEER'S SEAL

NO.	DATE	REMARKS	BY
1	2-92	NUMBERING REVISION	LH

REVISIONS

DESIGN
DESIGNED BY D. DOZIER/H. LIVERMORE DATE NOV. 9, 1990
DRAWN BY P. STRINEL
CHECKED BY B. GRIFFIS

CITY OF ALBUQUERQUE
PUBLIC WORKS DEPARTMENT
ENGINEERING GROUP

TITLE: GUTIERREZ PUMP STATION RECONSTRUCTION
INTERCONNECTION DIAGRAMS – PUMP NO. 1

APPROVALS	ENGINEER	DATE	APPROVALS	ENGINEER	DATE
DRC CHAIRMAN			WATER		
TRANSPORTATION			WASTE WATER		
HYDROLOGY					

PROJECT NO. 3337.90 | MAP NO. F-22 | SHEET E12 OF 19

GENERAL NOTES

1. SEE SHEET E-1 FOR SYMBOLS LEGEND AND ABBREVIATIONS LIST.
2. SEE SHEET E-8 FOR SCHEDULES.
3. REPLACE "##" AND "#-#" WITH ACTUAL TERMINAL ASSIGNMENTS BASED ON MANUFACTURERS SHOP DRAWINGS (TYPICAL).

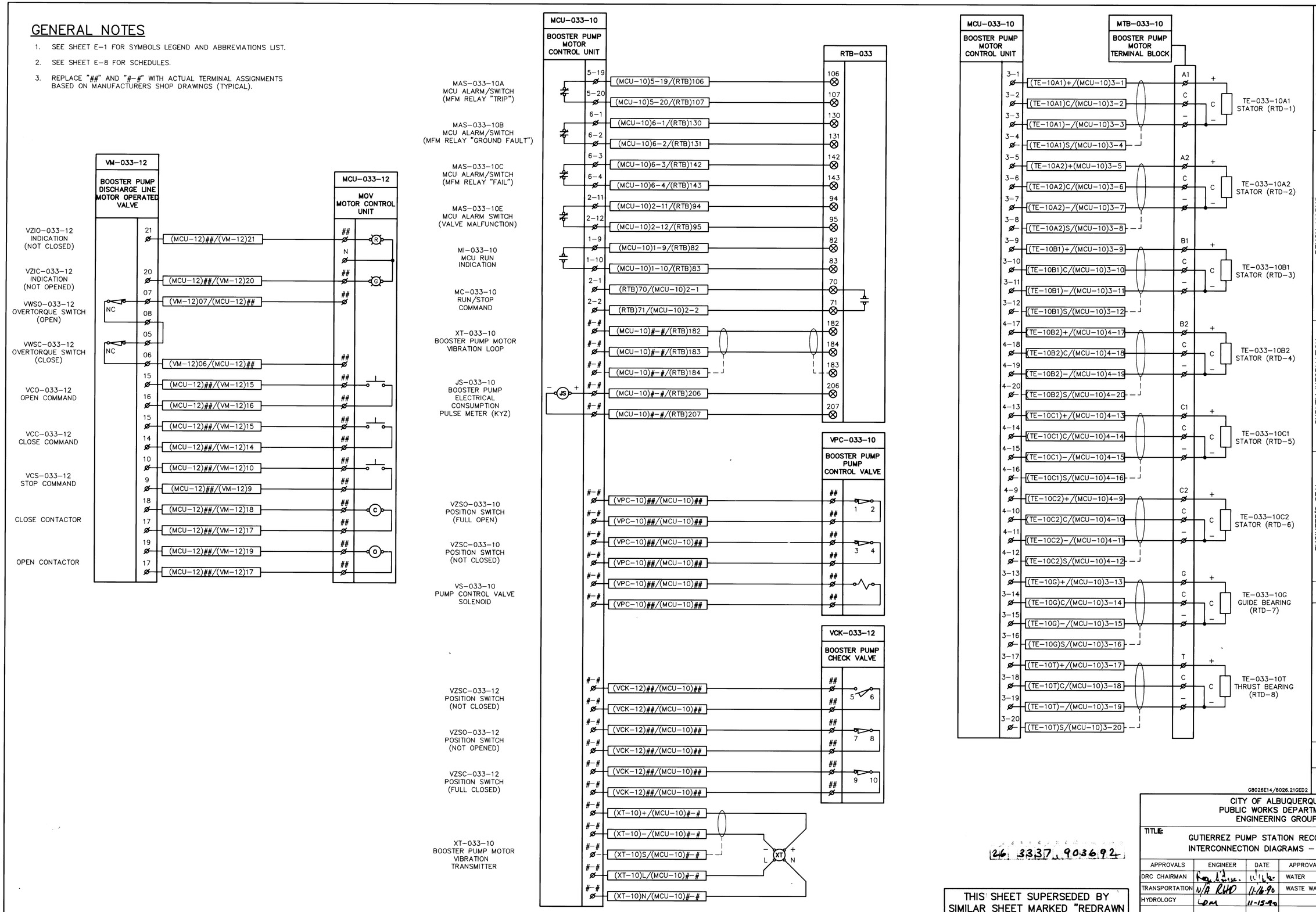

G8026E14/8026.21GED2

THIS SHEET SUPERSEDED BY SIMILAR SHEET MARKED "REDRAWN FOR RECORD PURPOSES"

AS BUILT INFORMATION

		DATE
CONTRACTOR		
WORK STAKED BY		
INSPECTOR'S ACCEPTANCE BY		
FIELD VERIFICATION BY		
DRAWINGS CORRECTED BY		

MICRO-FILM INFORMATION

RECORDED BY	
DATE	
NO.	

BENCH MARKS

SURVEY INFORMATION

NO.	FIELD NOTES BY	DATE

ENGINEER'S SEAL

REVISIONS

NO:	DATE	REMARKS	BY

DESIGN

DESIGNED BY D. DOZIER/H. LIVERMORE DATE NOV. 9, 1990
DRAWN BY P. STRINEL
CHECKED BY B. GRIFFIS

CITY OF ALBUQUERQUE
PUBLIC WORKS DEPARTMENT
ENGINEERING GROUP

TITLE: GUTIERREZ PUMP STATION RECONSTRUCTION
INTERCONNECTION DIAGRAMS – PUMP NO. 1

APPROVALS	ENGINEER	DATE	APPROVALS	ENGINEER	DATE
DRC CHAIRMAN	[illegible]	11-16-90	WATER	R.W. Kane	11-13-90
TRANSPORTATION	N/A RWD	11-16-90	WASTE WATER	R.W. Kane	11-13-90
HYDROLOGY	[illegible]	11-15-90			

PROJECT NO. 3337.90 | MAP NO. F-22 | SHEET E12 OF 19

26 3337 90 3692

GENERAL NOTES

1. SEE SHEET E-1 FOR SYMBOLS LEGEND AND ABBREVIATIONS LIST.
2. SEE SHEET E-8 FOR SCHEDULES.
3. REPLACE "##" AND "#-#" WITH ACTUAL TERMINAL ASSIGNMENTS BASED ON MANUFACTURERS SHOP DRAWINGS (TYPICAL).

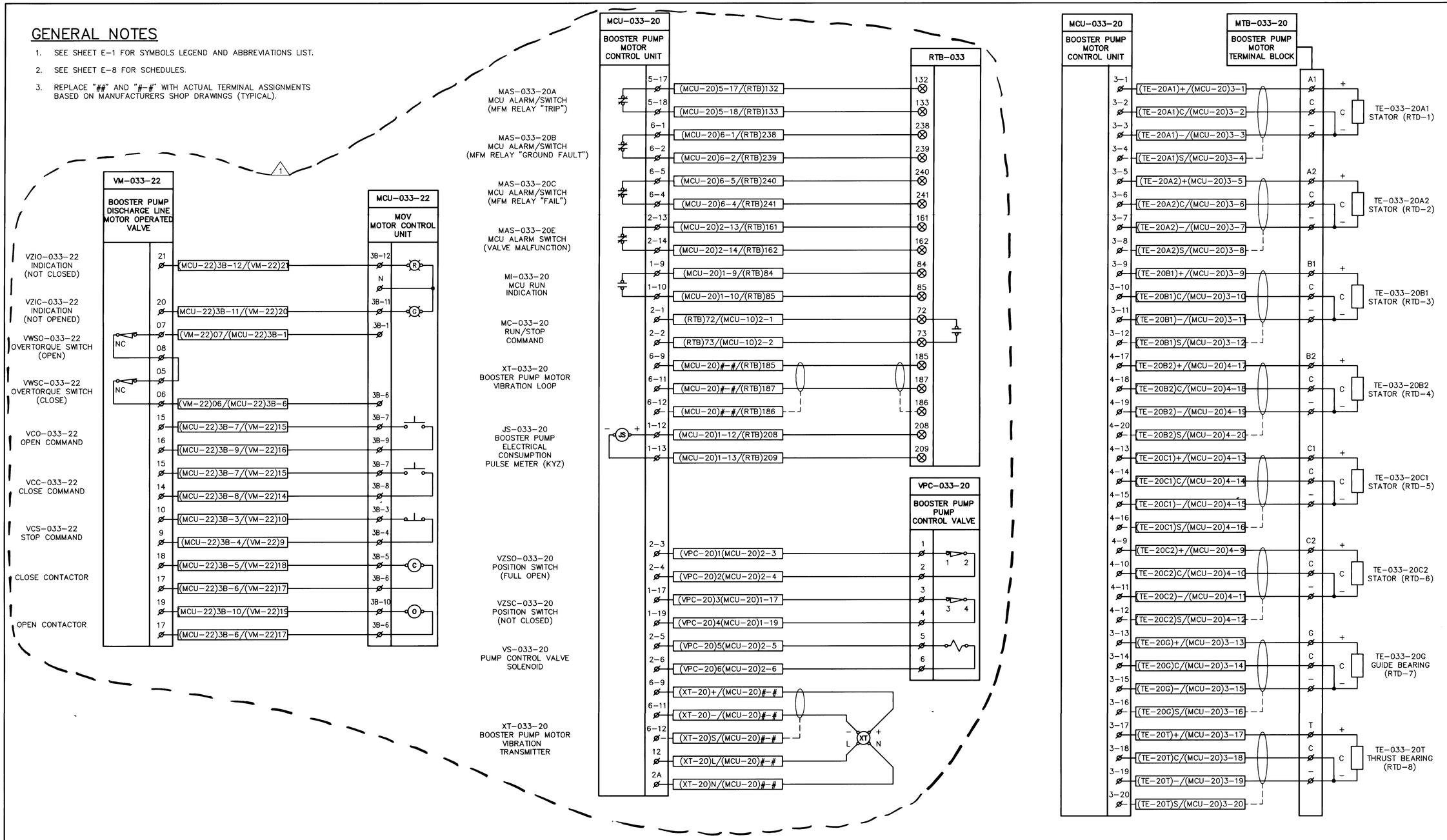

REDRAWN FOR RECORD PURPOSES

802621GED1/G8026E15

AS BUILT INFORMATION

CONTRACTOR	MCC		
WORK STAKED BY	ALB. SVY.	DATE	2/92
INSPECTOR'S ACCEPTANCE BY	LH	DATE	12/19/91
FIELD VERIFICATION BY	LH	DATE	12/91
DRAWINGS CORRECTED BY	LH	DATE	2/92

MICRO-FILM INFORMATION

RECORDED BY		DATE	
NO.			

BENCH MARKS

SURVEY INFORMATION

NO.	FIELD NOTES BY	DATE

ENGINEER'S SEAL

NO.	DATE	REMARKS	BY
1	2-92	NUMBERING REVISION	LH

REVISIONS

DESIGN

DESIGNED BY	D. DOZIER/H. LIVERMORE DATE NOV. 9, 1990
DRAWN BY	P. STRINEL
CHECKED BY	B. GRIFFIS

RECORD DRAWING
Date FEB 1992
These drawings have been revised based on field data and every reasonable attempt has been made to depict construction as actually performed.

CITY OF ALBUQUERQUE
PUBLIC WORKS DEPARTMENT
ENGINEERING GROUP

TITLE: GUTIERREZ PUMP STATION RECONSTRUCTION
INTERCONNECTION DIAGRAMS – PUMP NO. 2

APPROVALS	ENGINEER	DATE	APPROVALS	ENGINEER	DATE
DRC CHAIRMAN			WATER		
TRANSPORTATION			WASTE WATER		
HYDROLOGY					

PROJECT NO. 3337.90 | MAP NO. F-22 | SHEET E13 OF 19

GENERAL NOTES

1. SEE SHEET E-1 FOR SYMBOLS LEGEND AND ABBREVIATIONS LIST.
2. SEE SHEET E-8 FOR SCHEDULES.
3. REPLACE "##" AND "#-#" WITH ACTUAL TERMINAL ASSIGNMENTS BASED ON MANUFACTURERS SHOP DRAWINGS (TYPICAL).

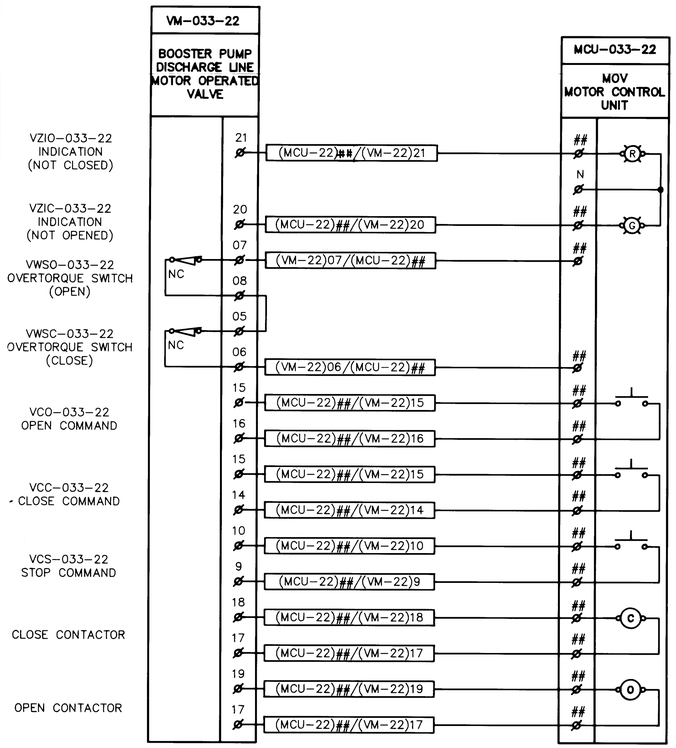

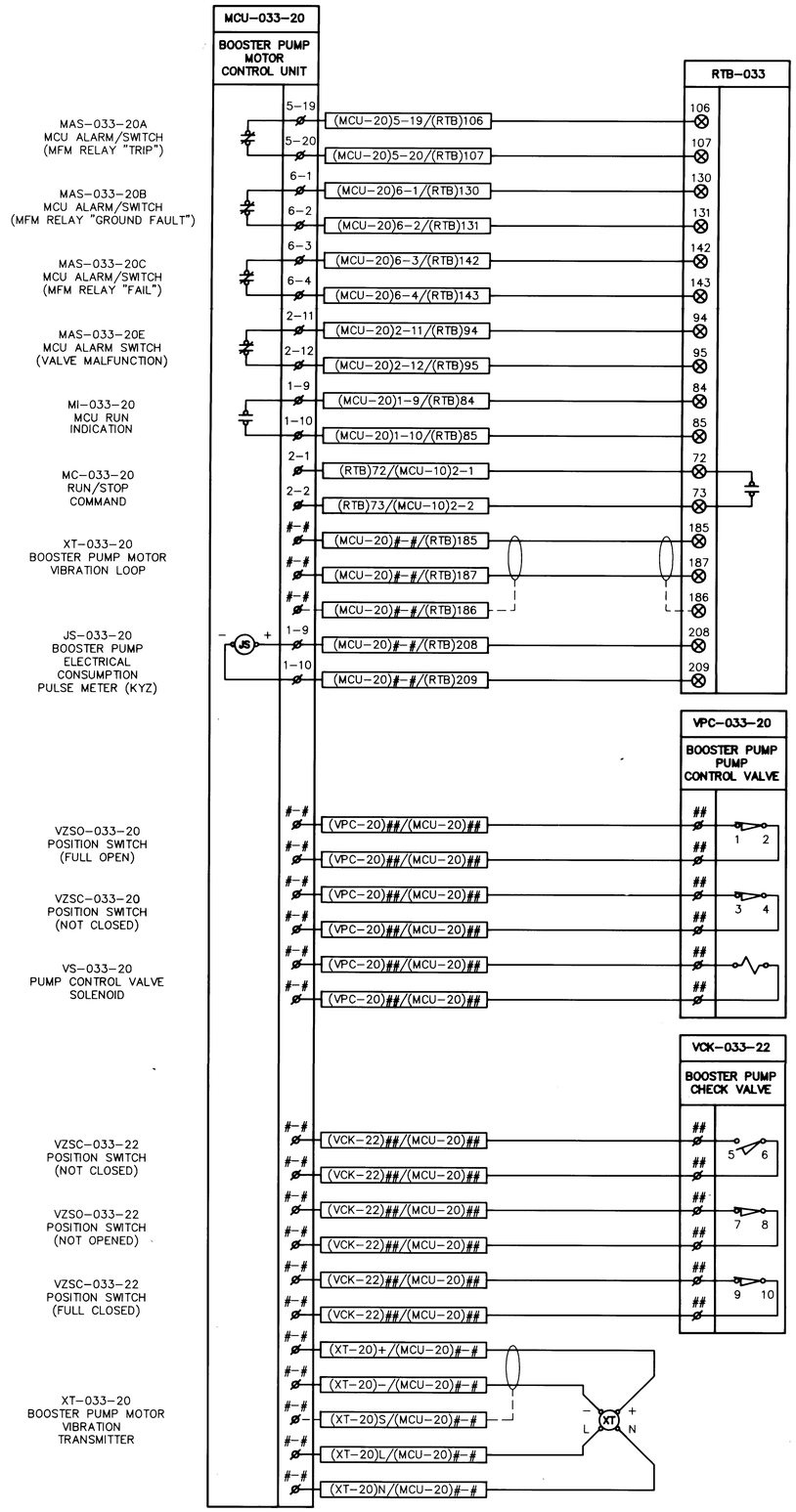

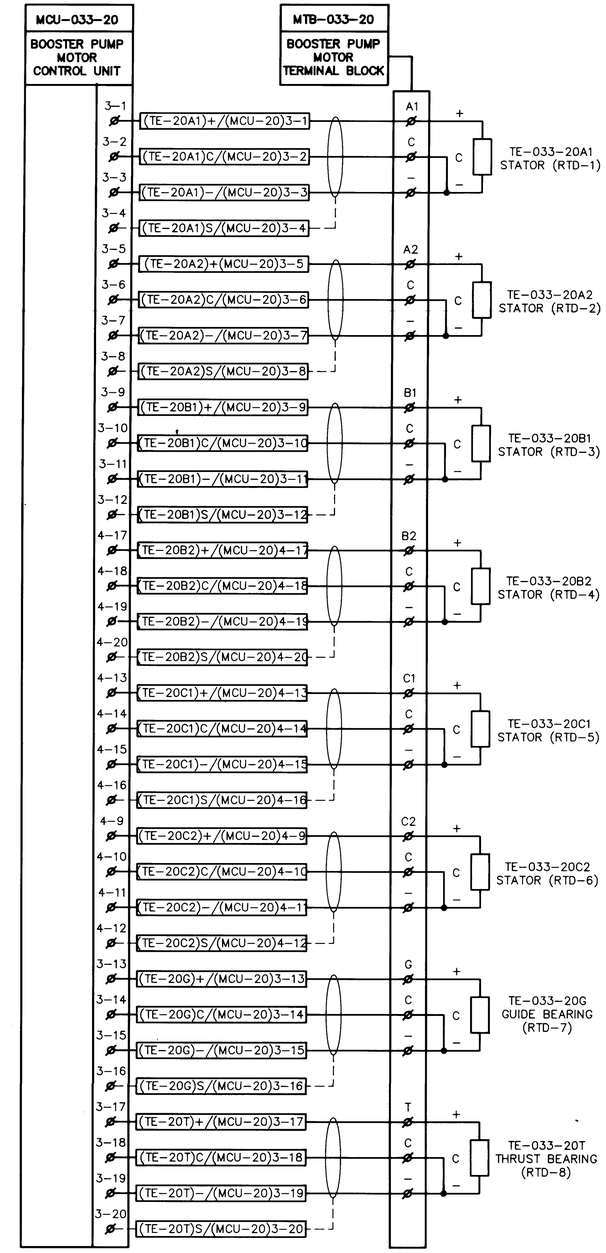

THIS SHEET SUPERSEDED BY SIMILAR SHEET MARKED "REDRAWN FOR RECORD PURPOSES"

AS BUILT INFORMATION
CONTRACTOR
WORK STAKED BY — DATE
INSPECTOR'S ACCEPTANCE — DATE
FIELD VERIFICATION BY — DATE
DRAWINGS CORRECTED BY — DATE

MICRO-FILM INFORMATION
RECORDED BY — DATE
NO.

BENCH MARKS

SURVEY INFORMATION
FIELD NOTES
NO. | BY | DATE

ENGINEER'S SEAL

NO.	DATE	REMARKS	BY
		REVISIONS	
		DESIGN	

DESIGNED BY D. DOZIER/H. LIVERMORE DATE NOV. 9, 1990
DRAWN BY P. STRINEL
CHECKED BY B. GRIFFIS

802621GED1/G8026E15

CITY OF ALBUQUERQUE
PUBLIC WORKS DEPARTMENT
ENGINEERING GROUP

TITLE: GUTIERREZ PUMP STATION RECONSTRUCTION
INTERCONNECTION DIAGRAMS – PUMP NO. 2

APPROVALS	ENGINEER	DATE	APPROVALS	ENGINEER	DATE
DRC CHAIRMAN	[illegible]	11/16/90	WATER	R.W. Kane	11-13-90
TRANSPORTATION	N/A RHO	11-16-90	WASTE WATER	R.W. Kane	11-13-90
HYDROLOGY	LDM	11-15-90			

PROJECT NO. 3337.90 | MAP NO. F-22 | SHEET E13 OF 19

GENERAL NOTES

1. SEE SHEET E-1 FOR SYMBOLS LEGEND AND ABBREVIATIONS LIST.
2. SEE SHEET E-8 FOR SCHEDULES.
3. REPLACE "##" AND "#-#" WITH ACTUAL TERMINAL ASSIGNMENTS BASED ON MANUFACTURERS SHOP DRAWINGS (TYPICAL).

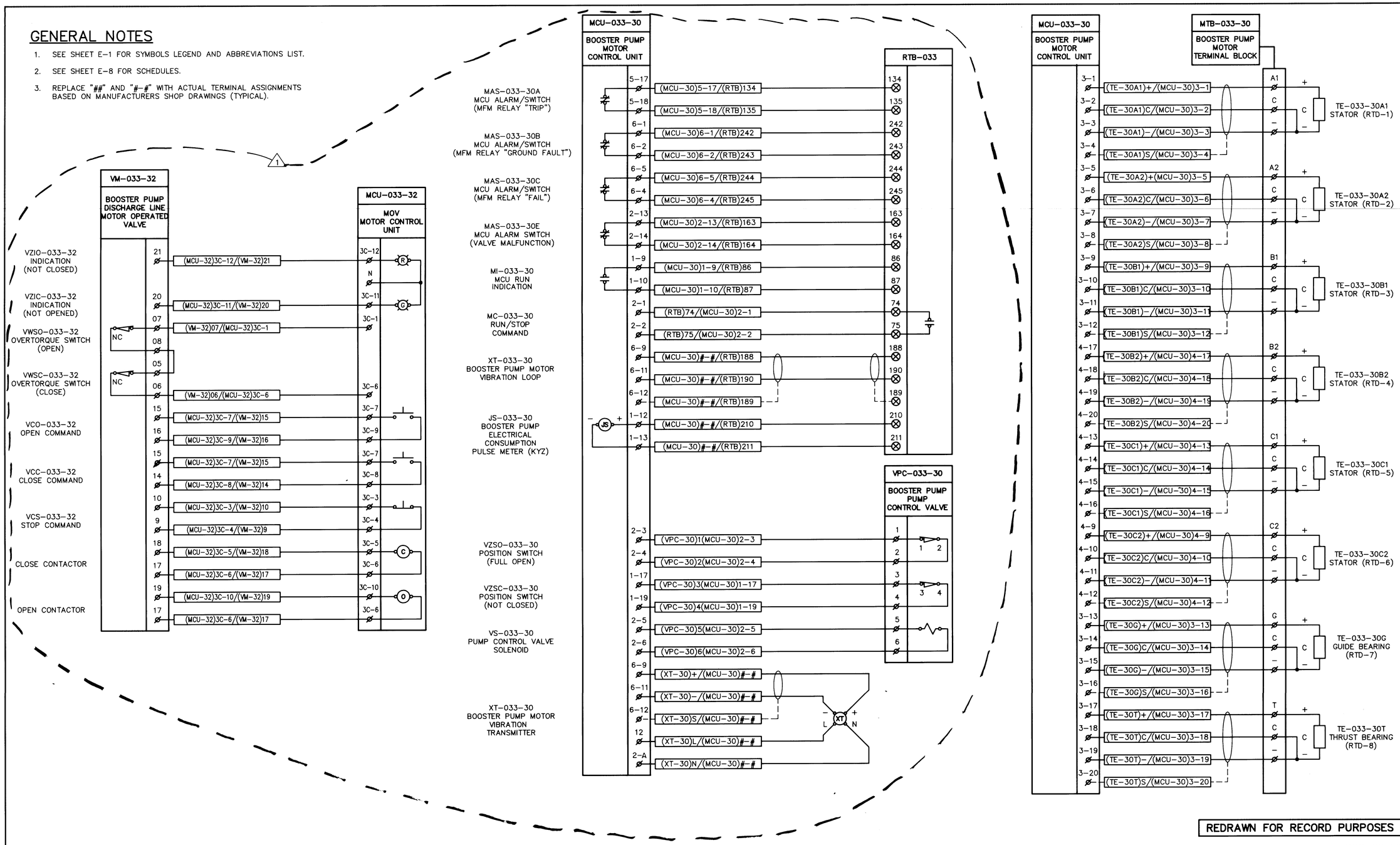

REDRAWN FOR RECORD PURPOSES

G8026E16/8026.21GED2

RECORD DRAWING
Date FEB 1992
These drawings have been revised based on field data and every reasonable effort has been made to depict construction as actually performed

NO.	DATE	NUMBERING REVISION	BY
1	2-92		LH

REMARKS

REVISIONS

DESIGN

DESIGNED BY D. DOZIER/H. LIVERMORE DATE NOV. 9, 1990
DRAWN BY P. STRINEL
CHECKED BY B. GRIFFIS

AS BUILT INFORMATION
CONTRACTOR MCC
WORK STAKED BY ALB. SVY. DATE 2/92
INSPECTOR ACCEPTANCE BY LH DATE 12/19/91
FIELD VERIFICATION BY LH DATE 12/91
DRAWINGS CORRECTED BY LH DATE 2/92
MICRO-FILM INFORMATION
RECORDED BY DATE
NO.

BENCH MARKS

SURVEY INFORMATION
FIELD NOTES
NO. BY DATE

ENGINEER'S SEAL

CITY OF ALBUQUERQUE
PUBLIC WORKS DEPARTMENT
ENGINEERING GROUP

TITLE: GUTIERREZ PUMP STATION RECONSTRUCTION
INTERCONNECTION DIAGRAMS – PUMP NO. 3

APPROVALS	ENGINEER	DATE	APPROVALS	ENGINEER	DATE
DRC CHAIRMAN			WATER		
TRANSPORTATION			WASTE WATER		
HYDROLOGY					

PROJECT NO. 3337.90 | MAP NO. F-22 | SHEET E14 OF 19