# WALKER NO. 2
# WELL EQUIPMENT

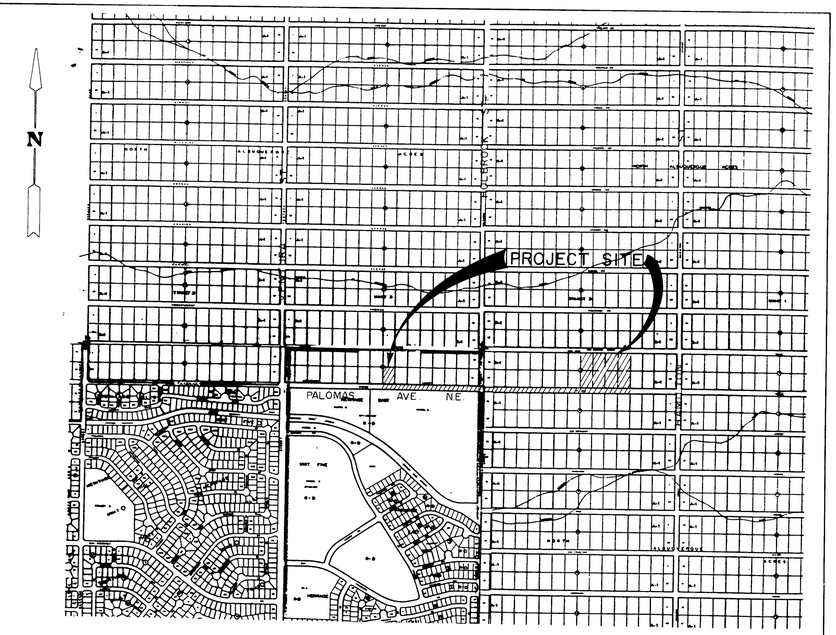


LOCATION MAP
SCALE: 1" = 800'±
ZONE ATLAS D-20 & D-21

## INDEX OF DRAWINGS


| SHEET NO. | TITLE |
|---|---|
| 1 OF 15 | COVER |
| 2 OF 15 | LEGEND |
| 3 OF 15 | LAYOUT AND GRADING PLAN |
| 4 OF 15 | ELEVATIONS |
| 5 OF 15 | FOUNDATION PLAN AND DETAILS |
| 6 OF 15 | FLOOR AND PIPING PLAN |
| 7 OF 15 | PIPING SCHEMATIC |
| 8 OF 15 | WALL SECTIONS |
| 9 OF 15 | ROOF FRAMING AND ROOF DRAINAGE PLAN |
| 10 OF 15 | ENCLOSURE DETAILS |
| 11 OF 15 | MISCELLANEOUS DETAILS |
| 12 OF 15 | PUMP FOUNDATION AND MISCELLANEOUS DETAILS |
| 13 OF 15 | PLAN AND PROFILE - WELL COLLECTOR LINE |
| 14 OF 15 | PLAN AND PROFILE - WELL COLLECTOR LINE |
| 15 OF 15 | PLAN AND PROFILE - WASH LINE |

### MECHANICAL

| | |
|---|---|
| M-1 OF M-2 | MECHANICAL FLOOR PLAN |
| M-2 OF M-2 | MECHANICAL DETAILS |

### ELECTRICAL

| | |
|---|---|
| E-1 OF E-9 | ELECTRICAL LEGEND |
| E-2 OF E-9 | ELECTRICAL SITE PLAN, CONDUIT SCHEDULES AND PANELBOARD SCHEDULE |
| E-3 OF E-9 | ONE LINE DIAGRAM/PIPING AND INSTRUMENT DIAGRAM |
| E-4 OF E-9 | LIGHTING AND RECEPTACLE PLAN |
| E-5 OF E-9 | POWER AND SPECIAL SYSTEMS PLAN |
| E-6 OF E-9 | CONTROL SCHEMATICS |
| E-7 OF E-9 | INTERCONNECTION DIAGRAMS |
| E-8 OF E-9 | INTERCONNECTION DIAGRAMS |
| E-9 OF E-9 | DETAILS |

### LANDSCAPING

| | |
|---|---|
| L-1 OF L-3 | IRRIGATION PLAN |
| L-2 OF L-3 | PLANTING PLAN |
| L-3 OF L-3 | IRRIGATION AND PLANTING DETAILS |


RECORD DRAWING
AUG 10 1989
Date
These drawings have been revised based on field [illegible] and every reasonable attempt has been made to depict construction as actually performed

1 2 3 4 5 6 7 8 9 10 11 12
2 6 3 3 3 8 0 1 8 9

| REV | SHEETS | CITY ENGINEER | DATE | USER DEPT. | DATE | USER DEPT. | DATE |
|---|---|---|---|---|---|---|---|
| | | | | | | | |

APPROVAL OF REVISIONS


LEEDSHILL-HERKENHOFF, INC.
Copper Square, 500 Copper Ave. N.W.
P.O. Box 1217
Albuquerque, New Mexico 87103
(505) 247-0294


APPROVED FOR CONSTRUCTION
10/19/88 C.E.

PROJECT NO. 3338

SHEET 1 OF 15

AF 22440A

83596

# LEGEND

| PROPOSED | EXISTING | DESCRIPTION |
|---|---|---|
| | | SANITARY SEWER MANHOLE |
| | | STORM DRAIN MANHOLE |
| NA | TELE MH | TELEPHONE MANHOLE |
| SAS 8" CP | SAS 8" CP | SANITARY SEWER LINE W/SIZE & TYPE |
| SD 48" RCP | SD 48" RCP | STORM DRAIN LINE W/SIZE & TYPE |
| W 6" CI | W 6" CI | WATER LINE W/SIZE & TYPE |
| NA | E | OVERHEAD ELECTRICAL LINES |
| UE | UE | UNDERGROUND ELECTRICAL / TRAFFIC CONTROL |
| NA | UT | UNDERGROUND TELEPHONE |
| NA | G 2" HP | GAS LINES W/SIZE & TYPE |
| NA | CT | CABLE TELEVISION LINES |
| | | ENCASEMENT |
| | | STORM DRAIN INLETS (GRADE ELEVATION GIVEN IN PLANS IS EXTENDED FLOW LINE) |
| | | GATE VALVE |
| | | BUTTERFLY VALVE |
| | | FIRE HYDRANTS |
| | | REDUCERS |
| | | SAS SERVICE CONNECTION |
| | | WATER SERVICE CONNECTION |
| | | TEES |
| | | CROSSES |
| | | BENDS |
| | | CAPS & PLUGS |
| NA | WM | WATER METER |
| VB | VB | VALVE BOX |
| NA | PP | POWER POLE |
| NA | LP | LIGHT POLE |
| TL | TL | TRAFFIC LIGHT |
| TC | TC | TRAFFIC CONTROL BOX |
| PB | PB | PULL BOX |
| NA | TB | TELEPHONE BOOTH |
| | | CURB & GUTTER |
| 4' S.W. | 4' S.W. | SIDEWALK |
| | | BLOCK WALL |
| | | CHAIN LINK FENCE |
| | | FIELD FENCE |
| 6533 | NA | SPOT ELEVATIONS |
| NA | | PROJECT / PHASE BOUNDARY |
| NA | | RIGHT OF WAY LINES |
| NA | | PROPERTY LINES (SIDE) |
| NA | | PUBLIC EASEMENTS |

#16

PROJECT Walker Well No. 2, Palomas Ave. NE, Albuquerque, NM — Page 1 of 1
JOB NO. E88-1148 DATE 8/30/88

## LOG OF TEST BORING NO. 2

RIG TYPE CME-55
BORING TYPE 6-1/2"Hollow stem auger
SURFACE ELEV.
DATUM

| Depth in Feet | Sample Type | Blows/foot 140 lb. 30" free-fall drop hammer | Dry Density lbs. per cubic foot | Moisture Content Percent of Dry Weight | Unified Soil Classification | Remarks | Visual Classification |
|---|---|---|---|---|---|---|---|
| 0 | S | 28 | | 5 | SC-SM | firm | SAND, fine to coarse, considerable clay, some silt, low plasticity, dark brown |
| | S | 14 | | 4 | ML | | |
| 5 | U | 69 | 109 | 6 | | moderately firm | SANDY SILT, low plasticity to nonplastic, brown |
| 10 | S | 18 | | 5 | SM | firm | SILTY SAND, fine to medium, some coarse, calcareous cementation, nonplastic to low plasticity, light brown<br>note: some seams very silty, occasional gravel |
| 15 | S | 25 | | 3 | | | |
| 20 | S | 33 | | 4 | SC | very firm | CLAYEY SAND, fine to medium, some coarse, some silt, low plasticity brown to light brown<br>note: seams variable in plasticity and grain size 24' to 29' |
| 25 | S | 40 | | 5 | | | |
| 30 | S | 31 | | 2 | SW | dense | SAND, fine to coarse, trace silt, some gravel, nonplastic, brown to light brown<br>note: thin seams of clayey sand |
| 35 | S | 16 | | 3 | SM | firm | SILTY SAND, predominantly fine, some medium to coarse, some gravel, nonplastic, brown to light brown |
| 40 | S | 33 | | 4 | SM | very firm | SILTY SAND, fine, nonplastic, brown |
| 45 | | | | | | | Stopped auger @ 39' 6"<br>Stopped sampler @ 41' |
| 50 | | | | | | | |

GROUNDWATER

| DEPTH | HOUR | DATE |
|---|---|---|
| | none | |

SAMPLE TYPE
A - Auger cuttings. B - Block sample.
S - 2" O.D. 1.38" I.D. tube sample.
U - 3" O.D. 2.42" I.D. tube sample.
T - 3" O.D. thin-walled Shelby tube.

SERGENT, HAUSKINS & BECKWITH
CONSULTING GEOTECHNICAL ENGINEERS
PHOENIX · ALBUQUERQUE · SANTA FE
SALT LAKE CITY · EL PASO · TUCSON

PROJECT Walker Well No. 2, Palomas Ave. NE, Albuquerque, NM — Page 1 of 1
JOB NO. E88-1148 DATE 8/30/88

## LOG OF TEST BORING NO. 1

RIG TYPE CME-55
BORING TYPE 6-1/2"Hollow stem auger
SURFACE ELEV.
DATUM

| Depth in Feet | Sample Type | Blows/foot 140 lb. 30" free-fall drop hammer | Dry Density lbs. per cubic foot | Moisture Content Percent of Dry Weight | Unified Soil Classification | Remarks | Visual Classification |
|---|---|---|---|---|---|---|---|
| 0 | S | 16 | | 6 | | firm | SAND, fine to coarse, considerable silt, some clay, low plasticity, brown |
| | U | 19 | 109 | 5 | SM | | |
| 5 | S | 28 | | 10 | | | |
| 10 | S | 13 | | 4 | SM | moderately firm | SAND, predominantly fine, trace medium and coarse, considerable silt, trace gravel, nonplastic, brown |
| 15 | S | 21 | | | SW | medium dense | SAND, fine to coarse, trace silt, trace gravel, nonplastic, brown |
| 20 | S | 19 | | 4 | | | |
| 25 | S | 31 | | 9 | SC | very firm | CLAYEY SAND, fine to coarse, trace gravel, low medium plasticity, brown |
| 30 | S | 43 no rec | | | SW | | |
| 35 | S | 34 | | 2 | | dense | SAND, fine to coarse, trace silt, some gravel, nonplastic, brown |
| 40 | S | 68 | | 7 | SC | hard | CLAYEY SAND, fine to medium, trace coarse, some silt, calcareous cementation nodules, low plasticity brown to light brown |
| 45 | | | | | | | Stopped auger @ 39' 6"<br>Stopped sampler @ 41' |
| 50 | | | | | | | |

GROUNDWATER

| DEPTH | HOUR | DATE |
|---|---|---|
| | none | |

SAMPLE TYPE
A - Auger cuttings. B - Block sample.
S - 2" O.D. 1.38" I.D. tube sample.
U - 3" O.D. 2.42" I.D. tube sample.
T - 3" O.D. thin-walled Shelby tube.

SERGENT, HAUSKINS & BECKWITH
CONSULTING GEOTECHNICAL ENGINEERS
PHOENIX · ALBUQUERQUE · SANTA FE
SALT LAKE CITY · EL PASO · TUCSON

## UNIFIED SOIL CLASSIFICATION SYSTEM

Soils are visually classified by the Unified Soil Classification system on the boring logs presented in this report. Grain-size analysis and Atterberg Limits Tests are often performed on selected samples to aid in classification. The classification system is briefly outlined on this chart. For a more detailed description of the system, see "The Unified Soil Classification System" Corp of Engineers, US Army Technical Memorandum No. 3-357 (Revised April 1960) or ASTM Designation: D2487-66T.

| MAJOR DIVISIONS | | | | GROUP SYMBOL | TYPICAL NAMES |
|---|---|---|---|---|---|
| COARSE-GRAINED SOILS (Less than 50% passes No. 200 sieve) | GRAVELS (50% or less of coarse fraction passes No. 4 sieve) | CLEAN GRAVELS (Less than 5% passes No. 200 sieve) | | GW | Well graded gravels, gravel-sand mixtures, or sand-gravel-cobble mixtures. |
| | | | | GP | Poorly graded gravels, gravel-sand mixtures, or sand-gravel-cobble mixtures. |
| | | GRAVELS WITH FINES (More than 12% passes No. 200 sieve) | Limits plot below "A" line & hatched zone on plasticity chart | GM | Silty gravels, gravel-sand-silt mixtures. |
| | | | Limits plot above "A" line & hatched zone on plasticity chart | GC | Clayey gravels, gravel-sand-clay mixtures. |
| | SANDS (More than 50% of coarse fraction passes No. 4 sieve) | CLEAN SANDS (Less than 5% passes No. 200 seive) | | SW | Well graded sands, gravelly sands. |
| | | | | SP | Poorly graded sands, gravelly sands. |
| | | SANDS WITH FINES (More than 12% passes No. 200 sieve) | Limits plot below "A" line & hatched zone on plasticity chart | SM | Silty sands, sand-silt mixtures. |
| | | | Limits plot above "A" line & hatched zone on plasticity chart | SC | Clayey sands, sand-clay mixtures. |
| FINE-GRAINED SOILS (50% or more passes No. 200 sieve) | SILTS (Limits plot below "A" line & hatched zone on plasticity chart) | SILTS OF LOW PLASTICITY (Liquid Limit Less Than 50) | | ML | Inorganic silts, clayey silts with slight plasticity. |
| | | SILTS OF HIGH PLASTICITY (Liquid Limit More Than 50) | | MH | Inorganic silts, micaceous or diatomaceous silty soils, elastic silts. |
| | CLAYS (Limits plot above "A" line & hatched zone on plasticity chart) | CLAYS OF LOW PLASTICITY (Liquid Limit Less Than 50) | | CL | Inorganic clays of low to medium plasticity, gravelly clays, sandy clays, silty clays, lean clays. |
| | | CLAYS OF HIGH PLASTICITY (Liquid Limit More Than 50) | | CH | Inorganic clays of high plasticity, fat clays, sandy clays of high plasticity. |

NOTE: Coarse grained soils with between 5% & 12% passing the No. 200 sieve and fine grained soils with limits plotting in the hatched zone on the plasticity chart to have double symbol.

PLASTICITY CHART

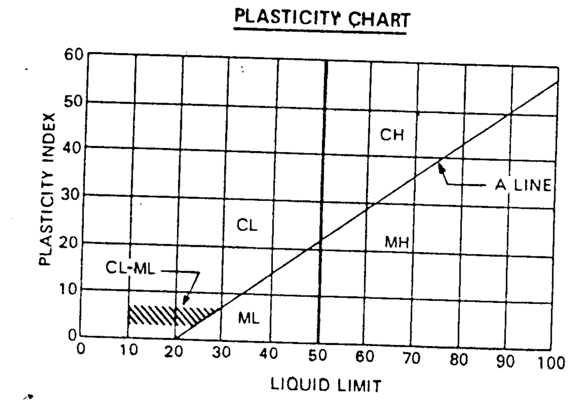


DEFINITIONS OF SOIL FRACTIONS

| SOIL COMPONENT | PARTICLE SIZE RANGE |
|---|---|
| Cobbles | Above 3 in. |
| Gravel | 3 in. to No. 4 sieve |
| Coarse gravel | 3 in. to ¾ in. |
| Fine gravel | ¾ in. to No. 4 sieve |
| Sand | No. 4 to No. 200 |
| Coarse | No. 4 to No. 10 |
| Medium | No. 10 to No. 40 |
| Fine | No. 40 to No. 200 |
| Fines (silt or clay) | Below No. 200 sieve |

## GENERAL NOTES

1. ALL WORK DETAILED ON THESE PLANS TO BE PERFORMED UNDER THIS CONTRACT SHALL, EXCEPT AS OTHERWISE STATED OR PROVIDED FOR HEREON, BE CONSTRUCTED IN ACCORDANCE WITH THE CITY OF ALBUQUERQUE STANDARD SPECIFICATIONS FOR PUBLIC WORKS CONSTRUCTION - 1986 EDITION (REFERRED TO HEREAFTER AS THE STANDARD SPECIFICATIONS).
2. TWO (2) WORKING DAYS PRIOR TO ANY EXCAVATION, CONTRACTOR MUST CONTACT LINE LOCATING SERVICE, 765-1234, FOR LOCATION OF EXISTING UTILITIES.
3. PRIOR TO CONSTRUCTION, THE CONTRACTOR SHALL EXCAVATE AND VERIFY THE HORIZONTAL AND VERTICAL LOCATIONS OF ALL OBSTRUCTIONS. SHOULD A CONFLICT EXIST, THE CONTRACTOR SHALL NOTIFY THE ENGINEER SO THAT THE CONFLICT CAN BE RESOLVED WITH MINIMUM AMOUNT OF DELAY.
4. EXCAVATED MATERIALS WILL ONLY BE PLACED AS APPROVED BY THE PROJECT ENGINEER.
5. THE CONTRACTOR SHALL COORDINATE HIS CONSTRUCTION ACTIVITIES WITH OTHER CONTRACTORS AND UTILITY COMPANIES WORKING IN THE SAME AREA.
6. ALL PERMANENT R.O.W. AND CONSTRUCTION EASEMENTS ON PRIVATE PROPERTY WILL BE OBTAINED BY THE CITY OF ALBUQUERQUE PRIOR TO THE BEGINNING OF CONSTRUCTION.
7. WHEN ABUTTING NEW PAVEMENT TO EXISTING, CONTRACTOR SHALL SAW CUT EXISTING PAVEMENT TO A STRAIGHT LINE, AS REQUIRED, TO REMOVE ANY BROKEN OR CRACKED PAVEMENT AND MATCH NEW TO EXISTING.
8. THE CONTRACTOR SHALL EXERCISE DUE CARE TO AVOID DISTURBING EXISTING UNDERGROUND UTILITIES. IT SHALL BE HIS RESPONSIBILITY TO COORDINATE WITH THE UTILITY COMPANIES IN ORDER TO PREVENT ANY SERVICE DISRUPTION.
9. ALL REFERENCES TO CITY STANDARD DRAWINGS WILL BE PER CITY OF ALBUQUERQUE STANDARD SPECIFICATION FOR PUBLIC WORKS CONSTRUCTION, 1986.
10. THE REMOVAL AND REPLACEMENT OF PRIVATE SIGNS AND OBSTRUCTIONS SHALL BE PERFORMED BY THE RESPECTIVE PROPERTY OWNERS UNLESS OTHERWISE NOTED. COORDINATION SHALL BE THE RESPONSIBILITY OF THE PROJECT ENGINEER.
11. CONTRACTOR SHALL BE FULLY RESPONSIBLE FOR COORDINATION WITH THE WATER SYSTEMS DIVISION MANAGER (823-4200) TWO (2) WORKING DAYS PRIOR TO ANY WORK NEEDING THE EXECUTION OF THE WATER VALVE SHUT-OFF PLAN.
12. STORM DRAIN INLET/OUTLET LINES SHALL NOT ENTER OR EXIT THE STORM DRAIN INLETS IN SUCH A MANNER THAT REDUCES OR IN ANY WAY DIMINISHES THE WALL THICKNESS INTEGRITY. (SEE THE C.O.A. STD. DWG DETAILS). FURTHER, PIPES SHALL ENTER ONLY THROUGH THE FRONT, BACK OR SIDES AS SHOWN ON THE PLANS.

RECORD DRAWING
Date AUG 1990
These drawings have been revised based on field data and every reasonable effort has been made to depict construction as actually performed.

AS BUILT INFORMATION: CONTRACTOR; WORK STARTED; INSPECTOR; ACCEPTANCE BY / DATE; FIELD VERIFICATION BY / DATE; DRAWINGS CORRECTED BY / DATE

MICRO-FILM INFORMATION: RECORDED BY / DATE; NO

BENCH MARKS

SURVEY INFORMATION — FIELD NOTES: NO. / BY / DATE

ENGINEER'S SEAL

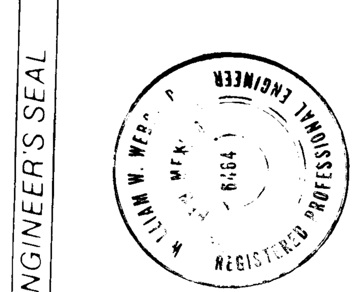


REVISIONS: NO. / DATE / REMARKS / BY

DESIGN: DESIGNED BY WW DATE 9-25-88; DRAWN BY D.C. DATE 9-25-88; CHECKED BY W.W. DATE 9-29-88

| 1 | 2 | 3 | 4 | 5 | 6 | 7 | 8 | 9 | 10 | 11 | 12 |
|---|---|---|---|---|---|---|---|---|---|---|---|
| 2 | 6 | | 3 | 3 | 3 | 8 | 0 | 2 | 8 | 9 | |

CITY OF ALBUQUERQUE
MUNICIPAL DEVELOPMENT DEPARTMENT
ENGINEERING DIVISION

TITLE: WALKER NO. 2 WELL EQUIPMENT
LEGEND AND TEST BORING LOG

| APPROVALS | ENGINEER | DATE | APPROVALS | ENGINEER | DATE |
|---|---|---|---|---|---|
| City Engineer | [signature] | 10.19.88 | Liquid Waste | PEGO | 10·19·88 |
| A.C.E - Design | " | " " | Traffic | [signature] | 10·19·88 |
| A.C.E - Hydrology | — | | Water | PEGO | 10·19·88 |

DRAWING NO. 3338 | MAP NO. D-21 | SHEET 2 OF 15

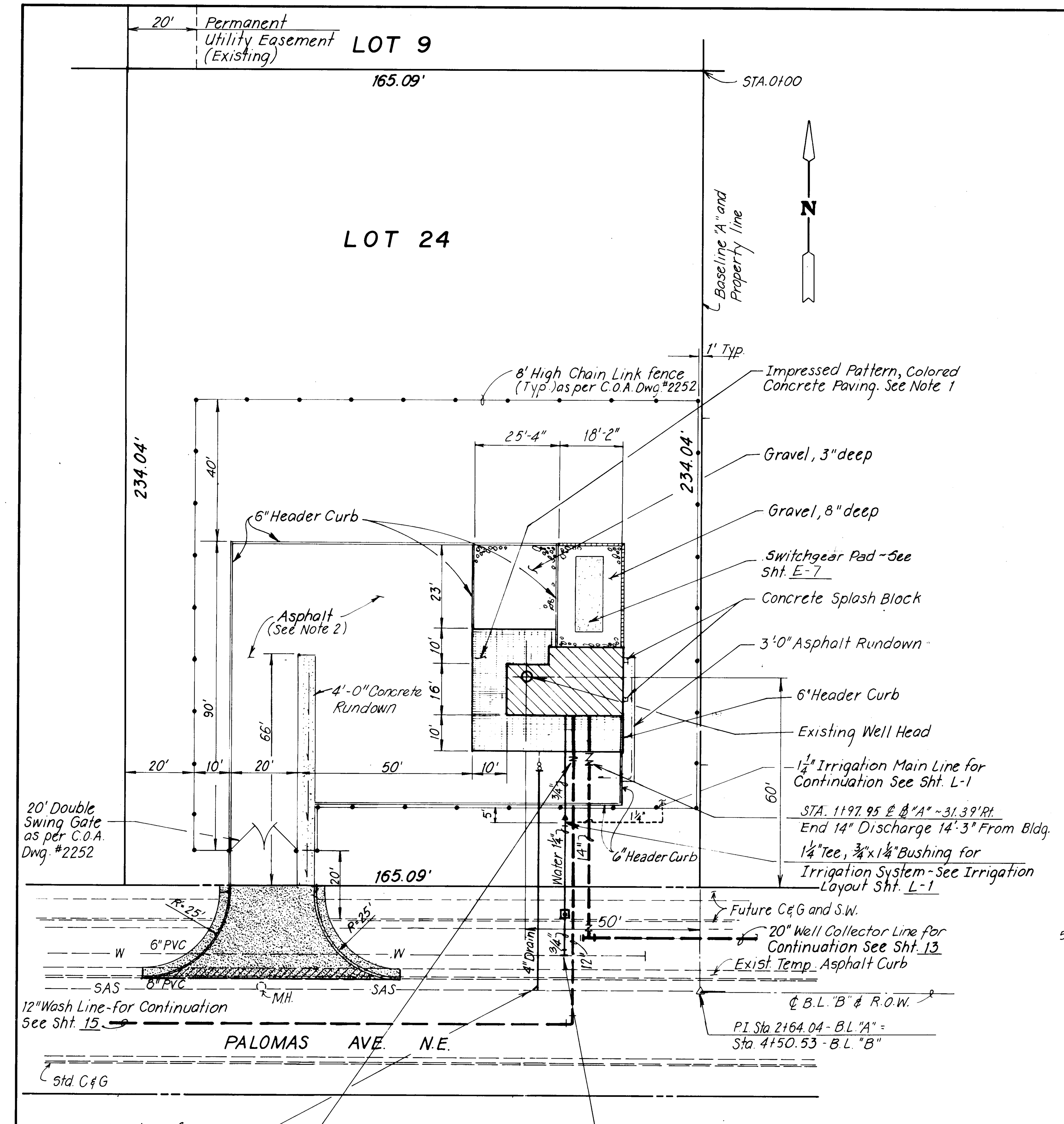


Begin Construction of 4" Drain line (Approx. 64' long) Connect to 8" Existing SAS as per C.O.A Dwg. #2125

Provide 3/4" Water Service Line Including Tap, Corp Stop, Curb Stop and Meter all as per C.O.A. Dwg # 2362

## LAYOUT PLAN

Scale: 1" = 20'

STA. 1+96.37 ℄ B "A" ~ 35.39' Rt.
End 12" Wash Line 12'-8" from Bldg.

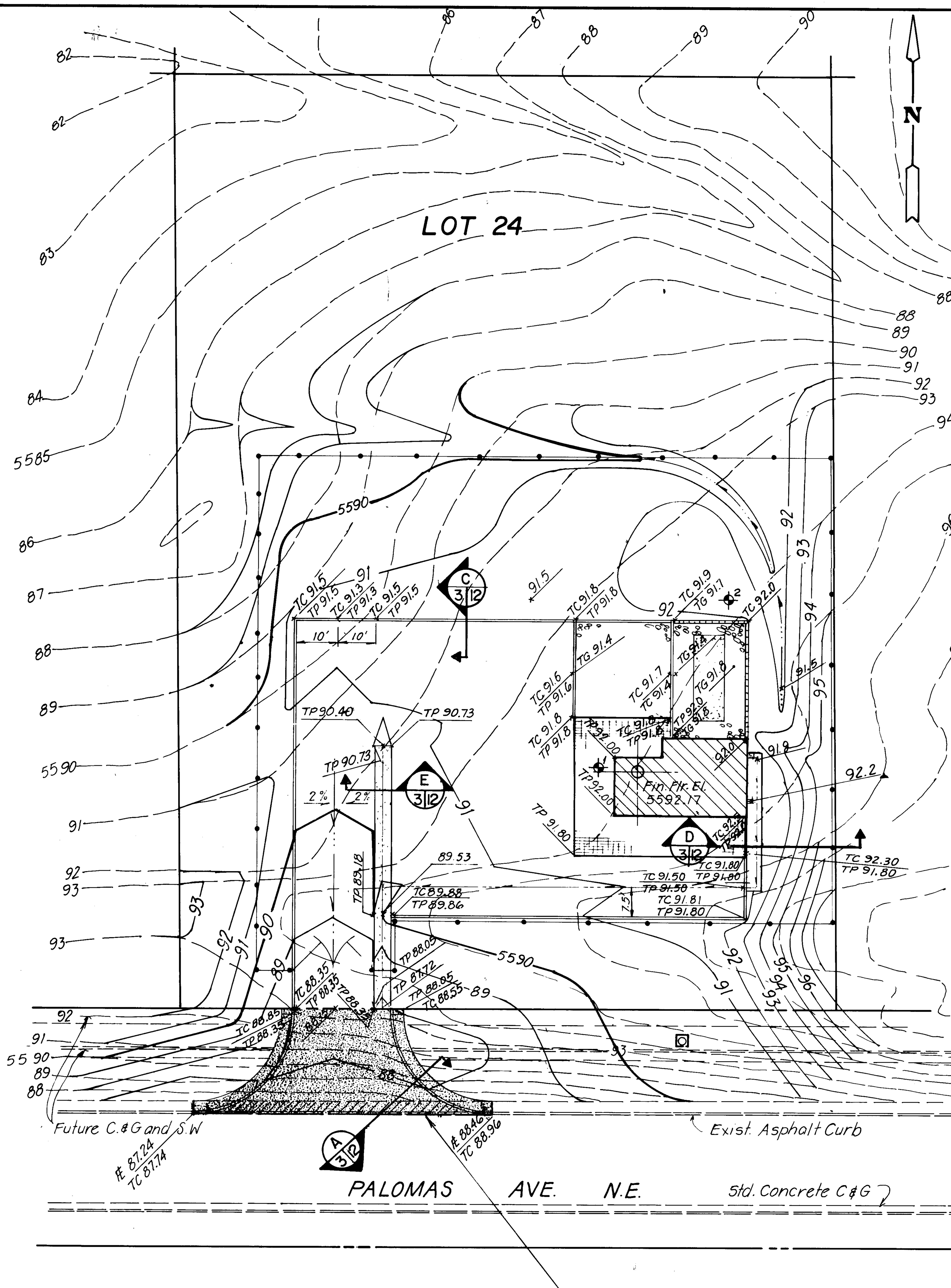


Saw Cut existing Pavement and Remove exist Asphalt Curb - Match New Pavement and New Asphalt Curb Returns

## GRADING PLAN

Scale: 1" = 20'

## LEGEND

- (shaded) Indicates Temporary Asphalt To be removed and replaced as req'd, when Palomas Ave is widened to 40' Face to Face
- TC – Top of Curb Elevation
- TP – Top of Asphalt or Concrete Paving Elevation
- TG – Top of Gravel Elevation
- ℄ – Flow Line Elevation
- x – Ground Elevation
- ⊕ – Test Hole

## CONSTRUCTION NOTES:

1. Materials for Impressed Pattern Colored Concrete Paving shall Comply with the requirements of N.M. Std. Specification for Public Works Construction, Section 101, for 3000 PSI Concrete Air Entrained Coloring Agent shall match Building Block color Integrally added at a rate of 3 pounds per bag of Cement, or approved equal. The Impressed Pattern shall be 5 1/2" x 8" running bond, flat finish. Placement, Finishing and Curing shall be performed in accordance with the Coloring Manufacturers Recommendations.
2. See Sht. 12 for Typ. Pavement Section

RECORD DRAWING
AUG 10 1989
Drawings have been revised based ... and every reasonable attempt ... made to depict construction as ...

| AS BUILT INFORMATION | |
|---|---|
| CONTRACTOR | DATE |
| WORK STAKED BY | DATE |
| INSPECTOR'S ACCEPTANCE BY | DATE |
| FIELD VERIFICATION BY | DATE |
| DRAWINGS CORRECTED BY | DATE |

| MICRO-FILM INFORMATION | |
|---|---|
| RECORDED BY | DATE |
| NO. | |

BENCH MARKS
Bench Mark: "C21A-1978" Brass Tablet Set in top of concrete post flush w/ ground @ the corner of Paseo Del Norte and Holbrook St. N.E., El = 5634.65

SURVEY INFORMATION

| NO. | BY | DATE |
|---|---|---|

ENGINEER'S SEAL

| NO. | DATE | REMARKS | BY |
|---|---|---|---|
| | | REVISIONS | |
| | | DESIGN | |
| | | DESIGNED BY D.D. | DATE 9-25-88 |
| | | DRAWN BY D.C. | DATE 9-25-88 |
| | | CHECKED BY K.W. | DATE 9-29-88 |

26 33380389

CITY OF ALBUQUERQUE
MUNICIPAL DEVELOPMENT DEPARTMENT
ENGINEERING DIVISION

TITLE: WALKER NO. 2 WELL EQUIPMENT
LAYOUT AND GRADING PLAN

| APPROVALS | ENGINEER | DATE | APPROVALS | ENGINEER | DATE |
|---|---|---|---|---|---|
| City Engineer | [signature] | 10-19-88 | Liquid Waste | [signature] | 10/19/88 |
| A.C.E. Design | [signature] | " " | Traffic | [signature] | 10-19-88 |
| A.C. E.-Hydrology | — | — | Water | [signature] | 10/19/88 |

| DRAWING NO. | MAP NO. | SHEET | |
|---|---|---|---|
| 3338 | D-21 | 3 OF 15 | |

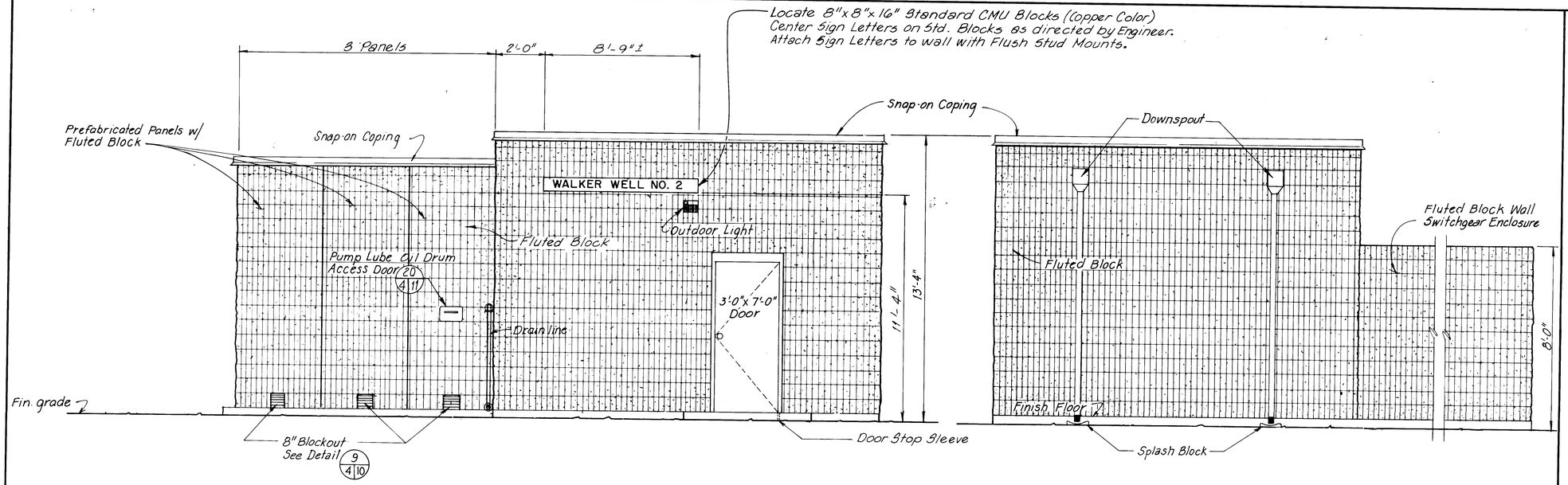


## SOUTH ELEVATION
N.T.S.




## EAST ELEVATION
N.T.S.

NOTE:
Sign Letters shall be heavy gauge aluminum, 4" high, baked white enamel in color. Sign letters shall be Eurostile # 128 as manufactured by Mills Manufacturing Company or approved equal.

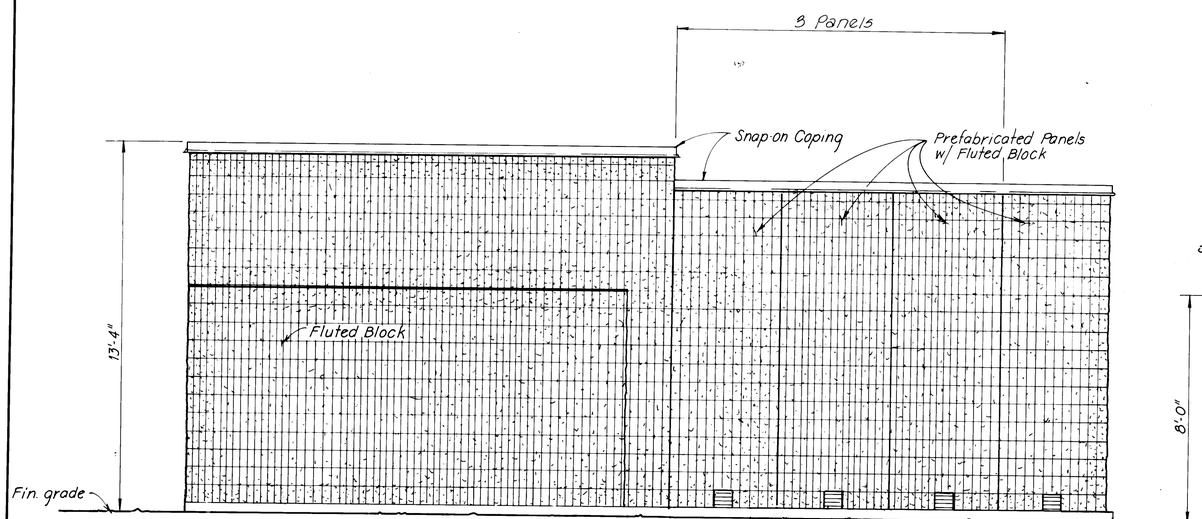


## NORTH ELEVATION
N.T.S.

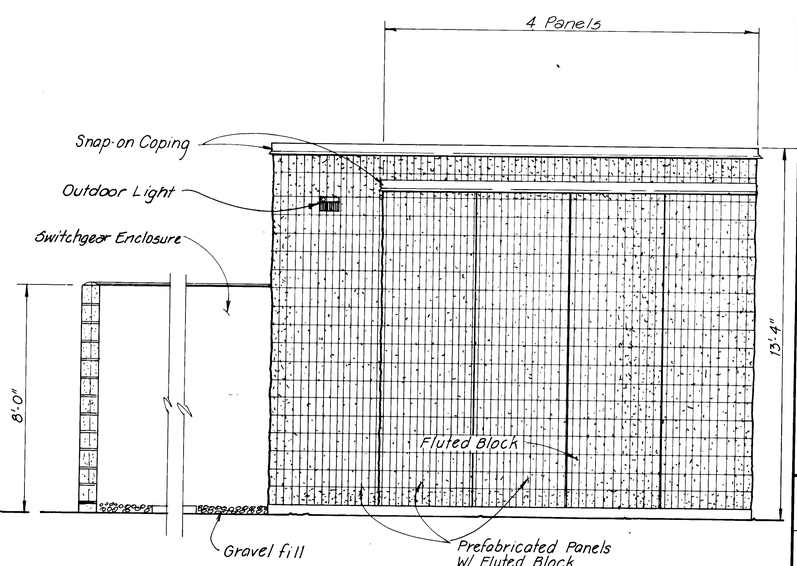


## WEST ELEVATION
N.T.S.

RECORD DRAWINGS
AUG 10 1989
Date

These drawings have been revised based on field data and every reasonable attempt has been made to depict construction as actually performed

AS BUILT INFORMATION
CONTRACTOR
WORK STAKED BY — DATE
INSPECTOR — DATE
FIELD VERIFICATION BY — DATE
DRAWINGS CORRECTED BY — DATE
MICRO-FILM INFORMATION
RECORDED BY — DATE
NO.

BENCH MARKS

SURVEY INFORMATION
FIELD NOTES
NO. | BY | DATE

ENGINEER'S SEAL

| NO. | DATE | REMARKS | BY |
|---|---|---|---|
| | | REVISIONS | |
| | | DESIGN | |

DESIGNED BY D.D. DATE 9/29/88
DRAWN BY D.C. DATE 9/29/88
CHECKED BY W.W. DATE 9/29/88

1 2 3 4 5 6 7 8 9 10 11 12
2 6 3 3 3 8 0 4 8 9

CITY OF ALBUQUERQUE
MUNICIPAL DEVELOPMENT DEPARTMENT
ENGINEERING DIVISION

TITLE: WALKER NO. 2 WELL EQUIPMENT
ELEVATIONS

| APPROVALS | ENGINEER | DATE | APPROVALS | ENGINEER | DATE |
|---|---|---|---|---|---|
| City Engineer | | 10.19.88 | Liquid Waste | | 10/19/88 |
| A.C.E. Design | | " " | Traffic | | 10.19.88 |
| A.C.E.-Hydrology | — | — | Water | | 10/19/88 |

DRAWING NO. 3338 | MAP NO. D-21 | SHEET 4 OF 15

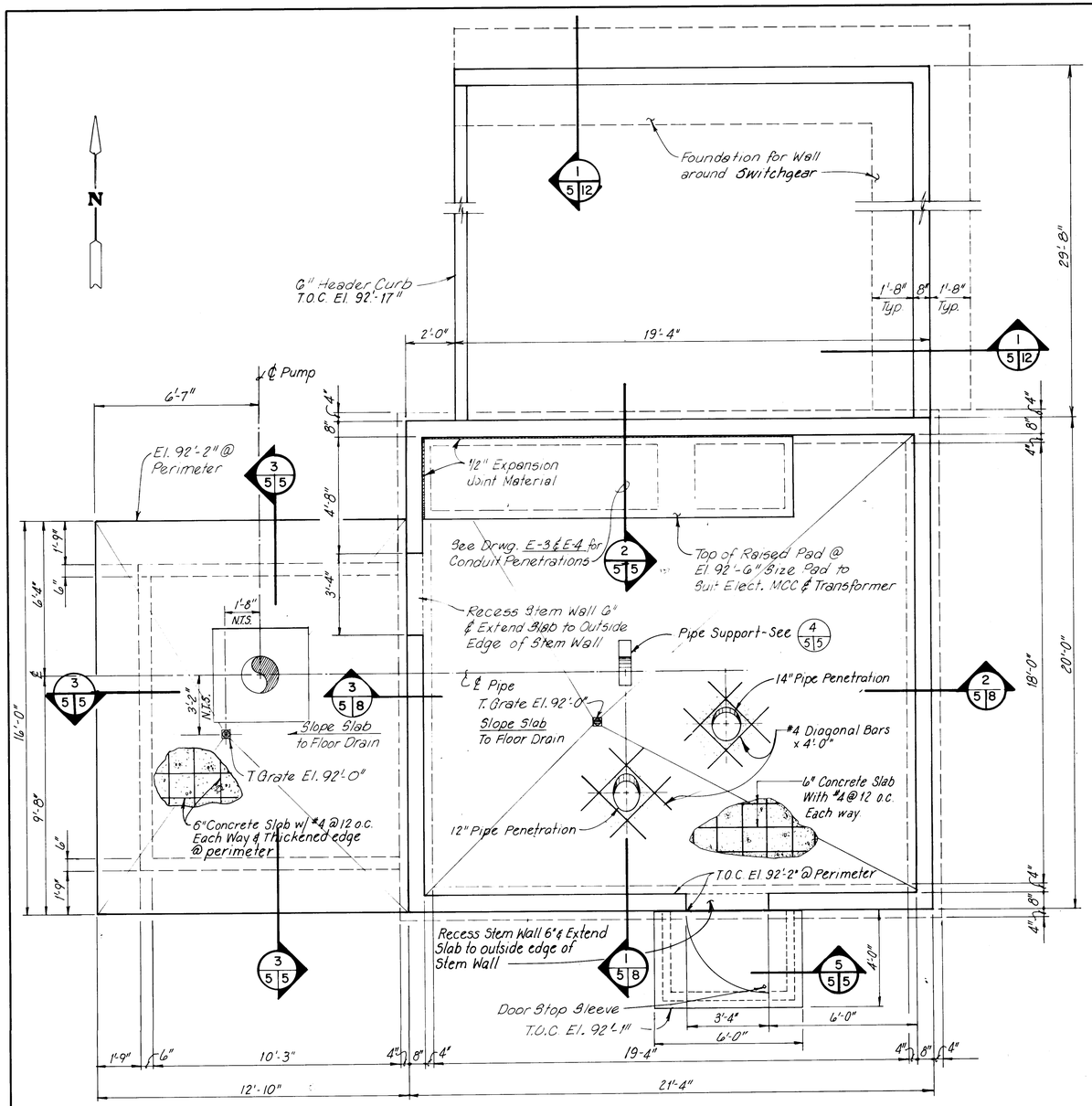


## FOUNDATION PLAN
SCALE: 3/8" = 1'-0"

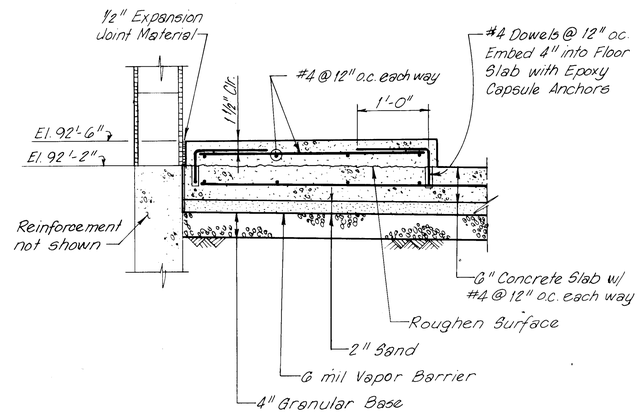


## SECTION
SCALE: 1" = 1'-0"

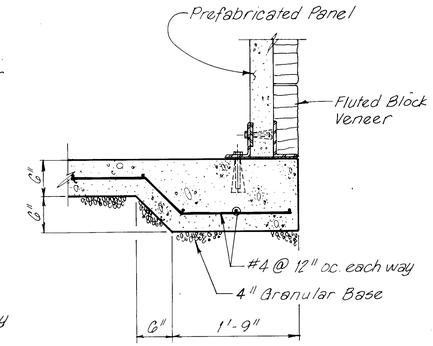


## SECTION
SCALE: 1" = 1'-0"

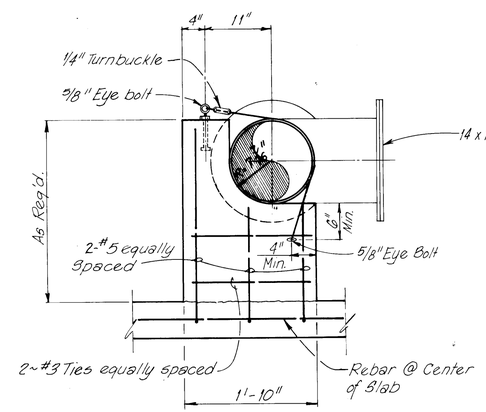


SECTION

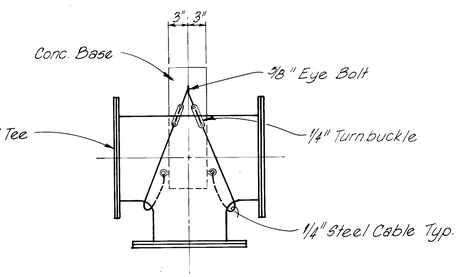


PLAN

## PIPE SUPPORT DETAIL
SCALE: 1" = 1'-0"

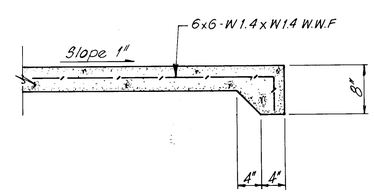


## SECTION
SCALE: 1" = 1'-0"

RECORD DRAWING
AUG 10 1989
Date

These drawings have been revised based on field data and every reasonable attempt has been made to depict construction as actually performed

AS BUILT INFORMATION

| | | |
|---|---|---|
| CONTRACTOR | | |
| WORK STAKED BY | DATE | |
| STAKING ACCEPTANCE BY | DATE | |
| FIELD VERIFICATION BY | DATE | |
| DRAWINGS CORRECTED BY | DATE | |
| MICRO-FILM INFORMATION | | |
| RECORDED BY | DATE | |
| NO. | | |

BENCH MARKS

SURVEY INFORMATION

FIELD NOTES

| NO. | BY | DATE |
|---|---|---|
| | | |

ENGINEER'S SEAL

| NO. | DATE | REMARKS | BY |
|---|---|---|---|
| | | REVISIONS | |

| | | DATE |
|---|---|---|
| DESIGNED BY | M.Z. & D.D. | 9-29-88 |
| DRAWN BY | D.C. & M.U. | 9-29-88 |
| CHECKED BY | R.W. | 9-29-88 |

| 1 | 2 | 3 | 4 | 5 | 6 | 7 | 8 | 9 | 10 | 11 | 12 |
|---|---|---|---|---|---|---|---|---|---|---|---|
| 2 | 6 | | 3 | 3 | 3 | 8 | 0 | 5 | 8 | 9 | |

CITY OF ALBUQUERQUE
MUNICIPAL DEVELOPMENT DEPARTMENT
ENGINEERING DIVISION

TITLE: WALKER NO. 2 WELL EQUIPMENT

FOUNDATION PLAN AND DETAILS

| APPROVALS | ENGINEER | DATE | APPROVALS | ENGINEER | DATE |
|---|---|---|---|---|---|
| City Engineer | | 10-19-88 | Liquid Waste | | 10/19/88 |
| A.C.E. Design | | " " | Traffic | | 10-19-88 |
| A.C.E.–Hydrology | — | - | Water | | 10/19/88 |

| DRAWING NO. | MAP NO. | SHEET | OF |
|---|---|---|---|
| 3338 | D-21 | 5 | 15 |

D70,6003E

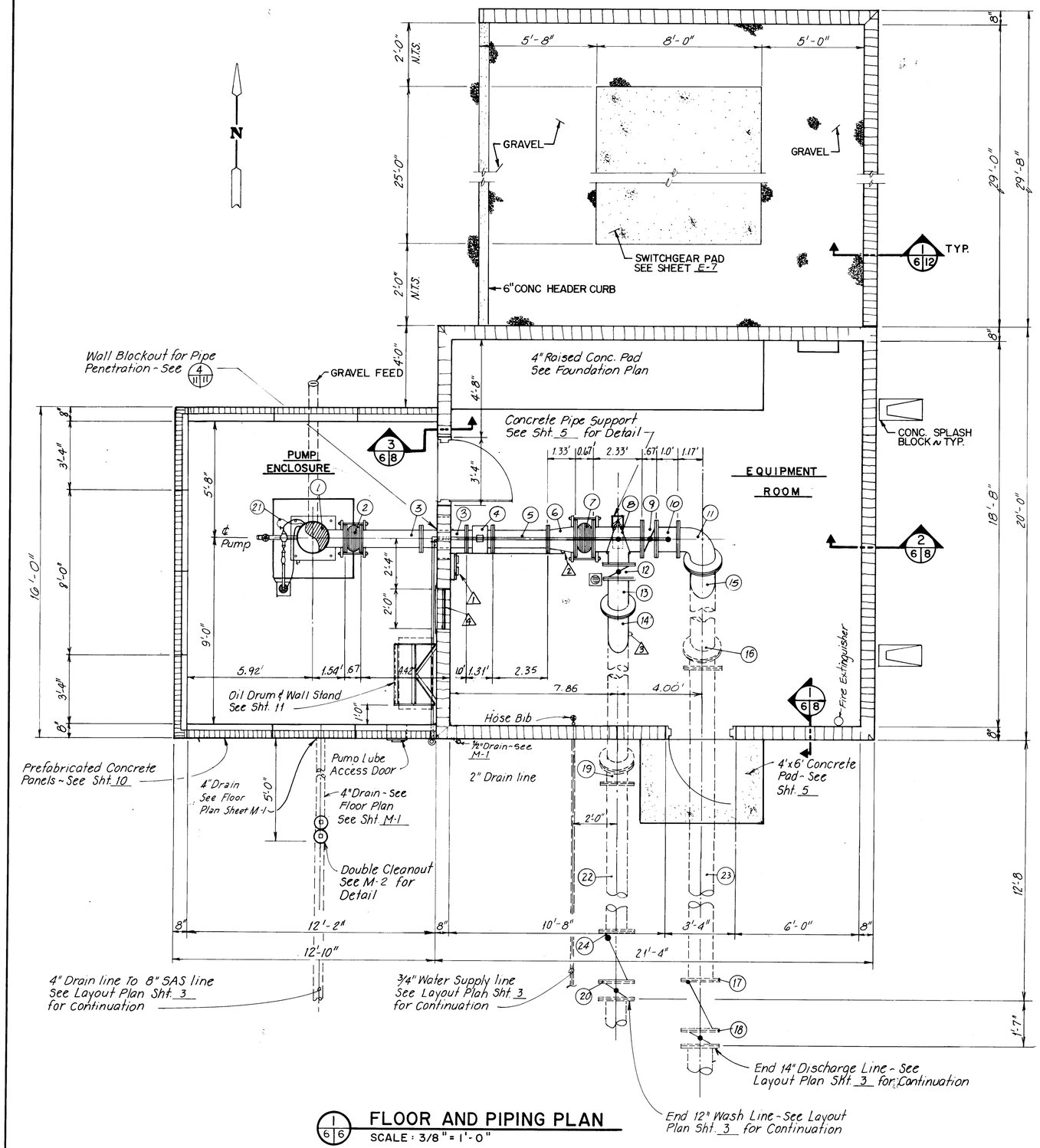


1/6 **FLOOR AND PIPING PLAN**
SCALE: 3/8" = 1'-0"

## PIPE FITTING SCHEDULE

| NO. | DESCRIPTION |
|---|---|
| 1 | PUMP MOTOR AND DISCHARGE HEAD – PUMP MOTOR CITY FURNISH CONTRACTOR INSTALLED |
| 2 | 10" FLEXIBLE COUPLING WITH RESTRAINTS (FL x FL) |
| 3 | 10" SPOOL (FL x FL) |
| 4 | 10" FLOW METER (FL x FL) – CITY FURNISHED CONTRACTOR INSTALLED |
| 5 | 10" SPOOL (FL x FL) W/HOSE BIB PLACED AT SPRINGLINE OF PIPE |
| 6 | 10"x14 REDUCER (FL x FL) BOSS ROTATE DOWN 30° FROM HORIZ. |
| 7 | 14" FLEXIBLE COUPLING WITH RESTRAINTS (FL x FL) |
| 8 | 14" x 14" x 12" TEE (FL x FL x FL) W/2" TAP ON TOP FOR AIR RELEASE LINE |
| 9 | 14" MOTORIZED BUTTERFLY VALVE-CITY FURNISHED CONTRACTOR INSTALLED |
| 10 | 14" SPOOL (FL x FL) W/ 1" TAP ON TOP FOR AIR RELEASE LINE |
| 11 | 14" 90° BEND-ROLL 60° - 2 BOLT HOLES |
| 12 | 12" MOTORIZED BUTTERFLY VALVE-CITY FURNISHED CONTRACTOR INSTALLED |
| 13 | 12" 45° BEND (FL x FL) |
| 14 | 12" SPOOL (FL x FL) W/ TAP LOCATION 20° FROM HORIZ. |
| 15 | 14" SPOOL (FL x FL) |
| 16 | 14" - 45° BEND AND 11 1/4° BEND |
| 17 | 14" CHECK VALVE (FL x FL) |
| 18 | 14" BUTTERFLY VALVE W/ VALVE BOX TYPE "B" |
| 19 | 12" - 45° BEND (FL x FL) |
| 20 | 12" BUTTERFLY VALVE W/ VALVE BOX TYPE "B" |
| 21 | PIPE AS NECESSARY FOR LUBE OIL DIPPER TEMP. COMPENSATOR AND MOTOR THRUST BEARING COOLING |
| 22 | 12" SPOOL (FLX FL) |
| 23 | 14" SPOOL (FLXFL) |
| 24 | 12" CHECK VALVE (FL x FL) |

## EQUIPMENT SCHEDULE

| | |
|---|---|
| 1 | PRESSURE SWITCH AND GAUGE SEE SHT. 11 |
| 2 | FLOW ELECTRODE - TAP LOCATION 30° FROM HORIZ. |
| 3 | WASH LINE LEAK DETECTOR - TAP LOCATION 20° FROM HORIZ. |
| 4 | WALL LOUVER - SEE M-1 FOR DETAIL |

AS BUILT INFORMATION
CONTRACTOR
WORK STAKED BY
INSPECTOR'S ACCEPTANCE BY
FIELD VERIFICATION BY
DRAWINGS CORRECTED BY
MICRO-FILM INFORMATION
RECORDED BY
DATE
NO.

BENCH MARKS

SURVEY INFORMATION
FIELD NOTES
NO. BY DATE

ENGINEER'S SEAL

| NO. | DATE | REMARKS | BY |
|---|---|---|---|
| | | REVISIONS | |

DESIGN
DESIGNED BY M.Z. & D.D. DATE 9-29-88
DRAWN BY D.C., B.C. & M.U. DATE 9-29-88
CHECKED BY M.M. DATE 9-29-88

1 2 3 4 5 6 7 8 9 10 11 12
26 3338068 9

CITY OF ALBUQUERQUE
MUNICIPAL DEVELOPMENT DEPARTMENT
ENGINEERING DIVISION

TITLE: WALKER NO. 2 WELL EQUIPMENT
FLOOR AND PIPING PLAN

| APPROVALS | ENGINEER | DATE | APPROVALS | ENGINEER | DATE |
|---|---|---|---|---|---|
| City Engineer | | | Liquid Waste | | 10/19/88 |
| A.C.E. Design | | 10-19-88 | Traffic | | 10-19-88 |
| A.C.E.-Hydrology | — | — | Water | | 10/19/88 |

DRAWING NO. 3338 MAP NO. D-21 SHEET 6 OF 15

RECORD DRAWING
Date AUG 0 1989
These drawings have been revised based on field data and every reasonable attempt has been made to depict construction as actually performed

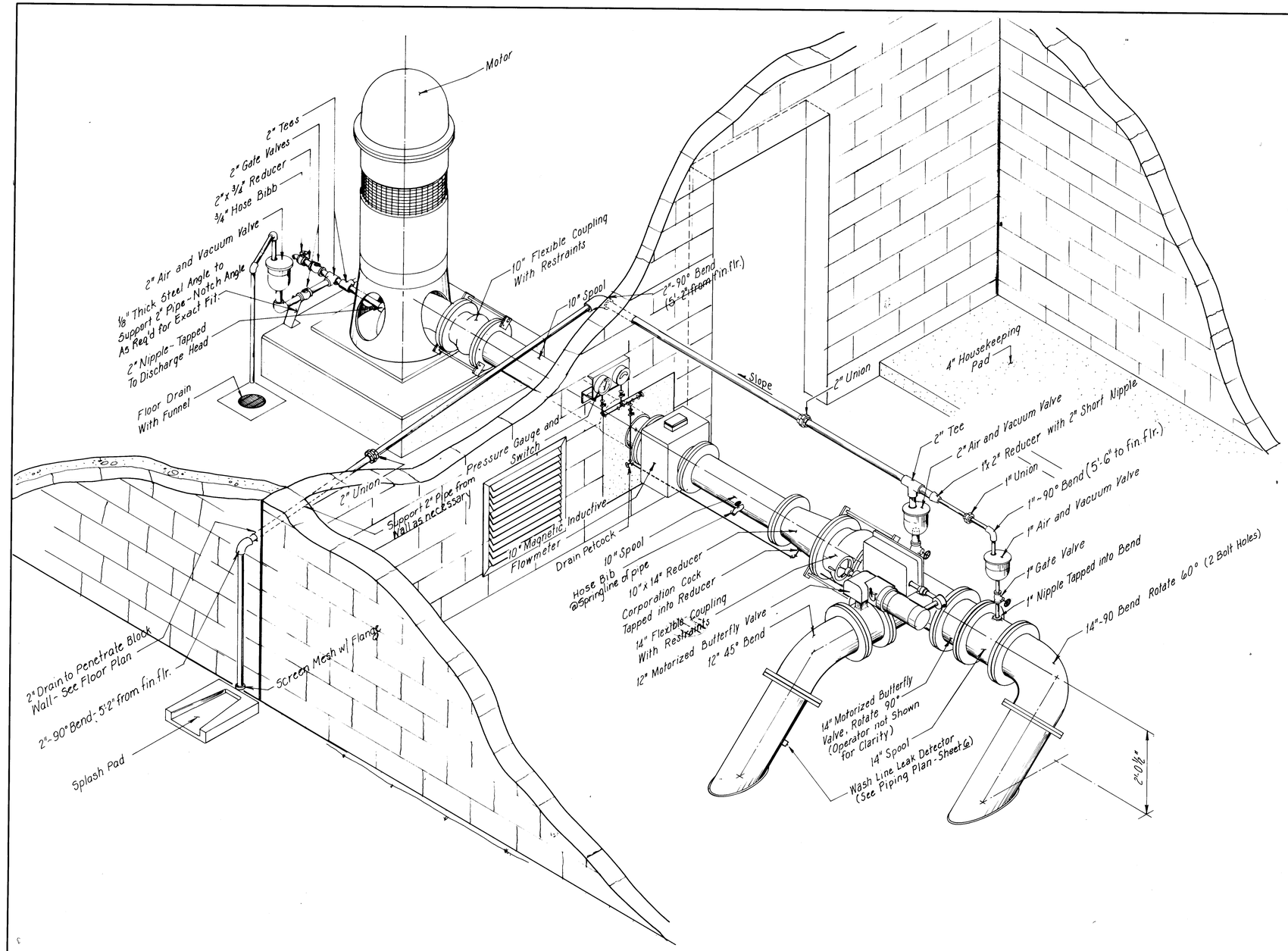


## PIPING SCHEMATIC

N.T.S.

AS BUILT INFORMATION

| | | |
|---|---|---|
| CONTRACTOR | | |
| WORK STAKED BY | | DATE |
| INSPECTOR'S ACCEPTANCE BY | | DATE |
| FIELD VERIFICATION BY | | DATE |
| DRAWINGS CORRECTED BY | | DATE |

MICRO-FILM INFORMATION

| | |
|---|---|
| RECORDED BY | DATE |
| NO. | |

BENCH MARKS

SURVEY INFORMATION

FIELD NOTES

| NO. | BY | DATE |
|---|---|---|
| | | |

ENGINEER'S SEAL

WILLIAM W. WEBSTER NEW MEXICO REGISTERED PROFESSIONAL ENGINEER

| NO. | DATE | REMARKS | BY |
|---|---|---|---|
| | | REVISIONS | |

| | | | |
|---|---|---|---|
| DESIGN | | | |
| DESIGNED BY | M.Z. & O.D. | DATE | 9-29-88 |
| DRAWN BY | U.D. | DATE | 9-29-88 |
| CHECKED BY | W.W. | DATE | 9-29-88 |

| 1 | 2 | 3 | 4 | 5 | 6 | 7 | 8 | 9 | 10 | 11 | 12 |
|---|---|---|---|---|---|---|---|---|---|---|---|
| 2 | 6 | | 3 | 3 | 3 | 8 | 0 | 7 | 8 | 9 | |

CITY OF ALBUQUERQUE
MUNICIPAL DEVELOPMENT DEPARTMENT
ENGINEERING DIVISION

TITLE: WALKER NO. 2 WELL EQUIPMENT
PIPING SCHEMATIC

| APPROVALS | ENGINEER | DATE | APPROVALS | ENGINEER | DATE |
|---|---|---|---|---|---|
| City Engineer | | 10.19.88 | Liquid Waste | PESO | 10/19/88 |
| A.C.E. Design | | " " | Traffic | | 10.19.88 |
| A.C.E.–Hydrology | — | — | Water | PESO | 10/19/88 |
| | | | | | |

| DRAWING NO. | MAP NO. | SHEET | OF |
|---|---|---|---|
| 3338 | D-21 | 7 | 15 |

RECORD DRAWING
Date AUG 10 1989
These drawings have been revised based on field data and every reasonable attempt has been made to depict construction as actually performed.

070,6003E18

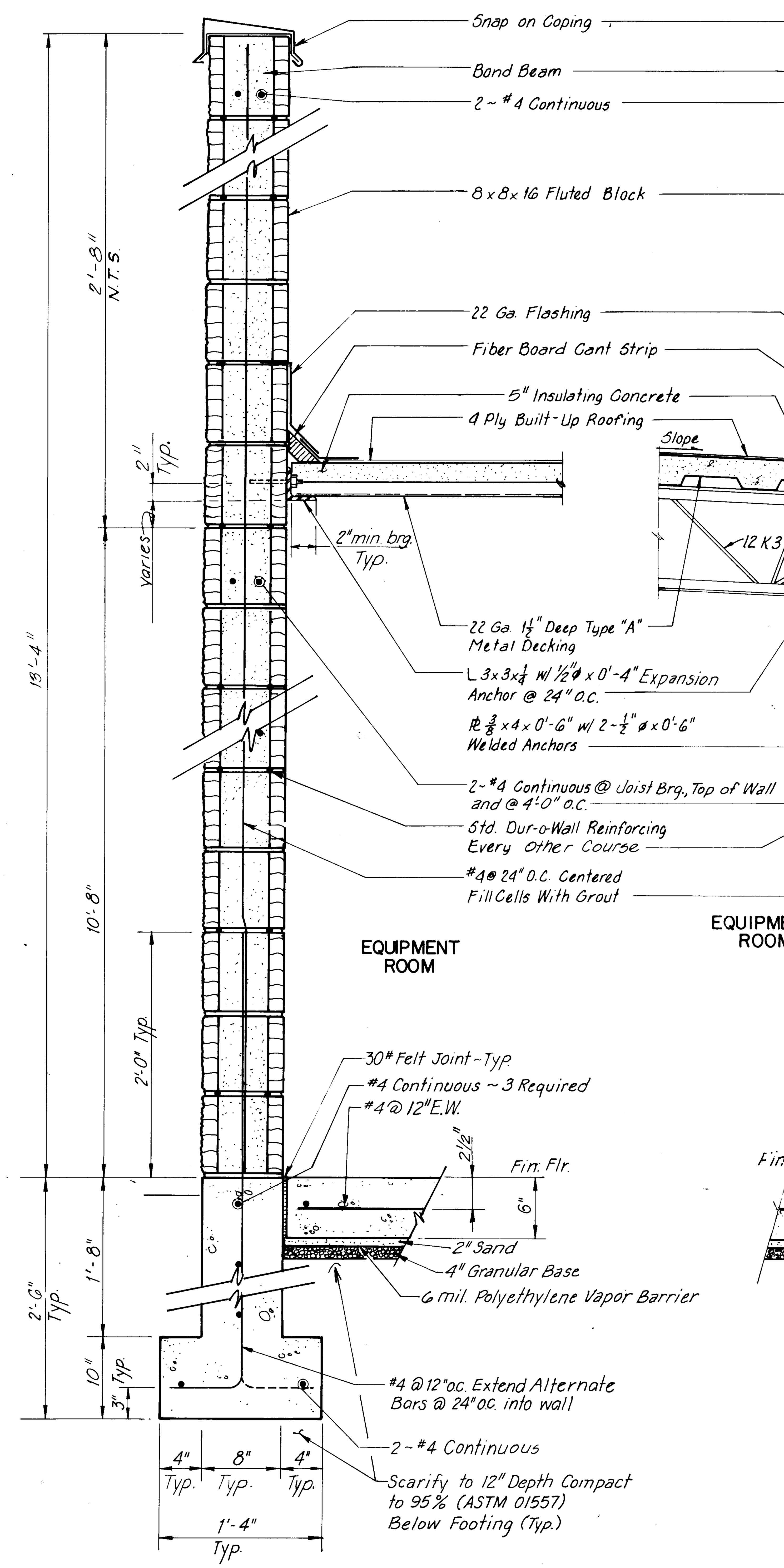


1 5 8 6 **WALL SECTION**
N.T.S.

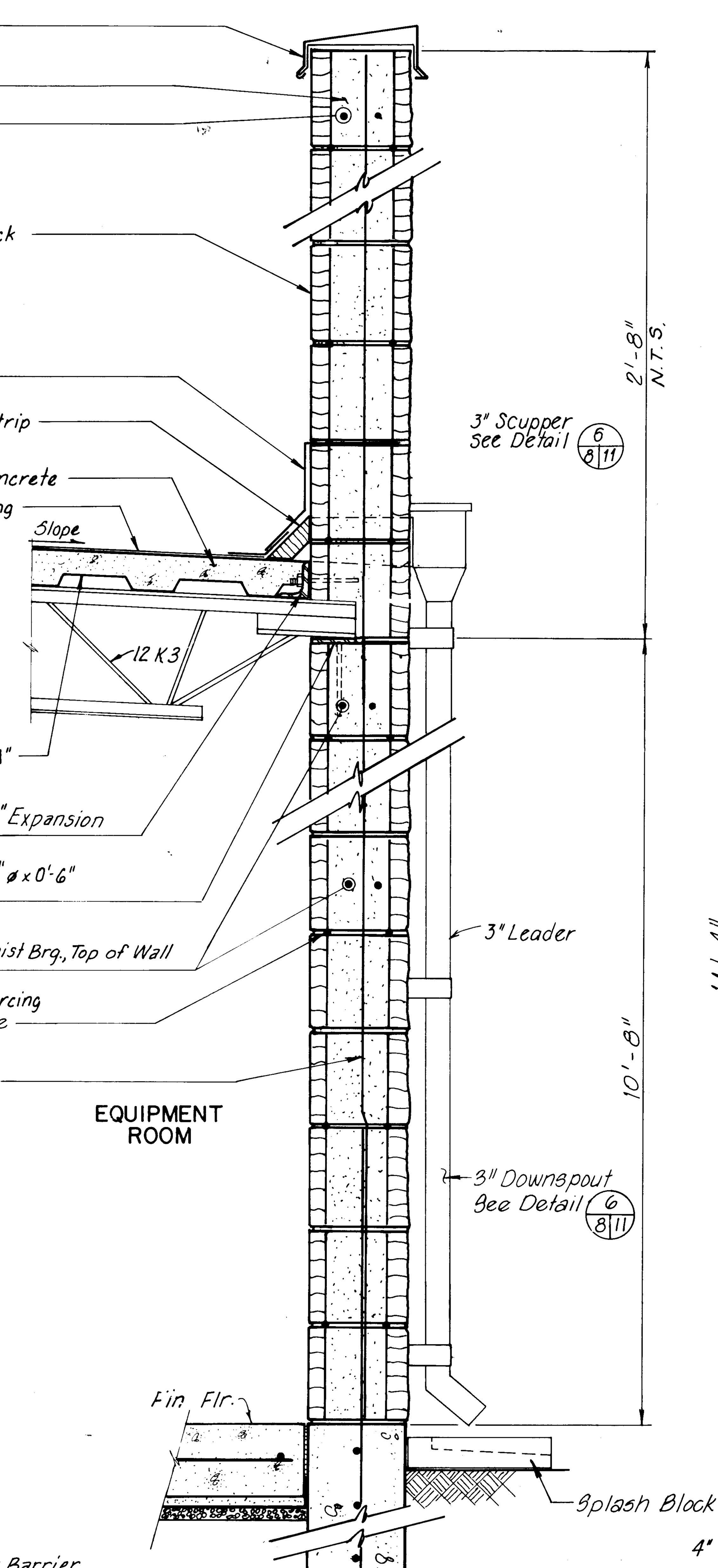


2 5 8 6 9 **WALL SECTION**
N.T.S.

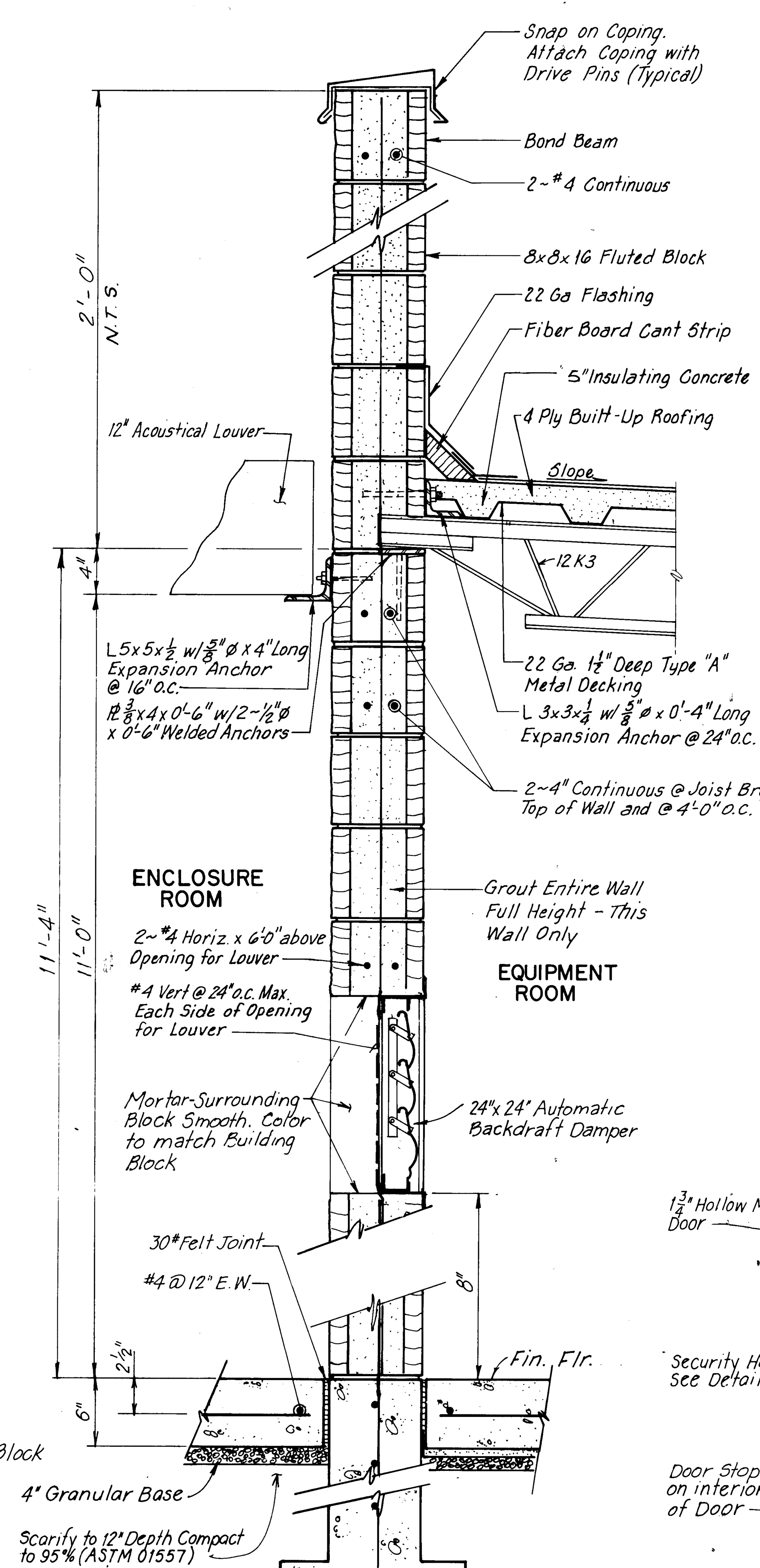


3 5 8 6 9 **WALL SECTION**
N.T.S.

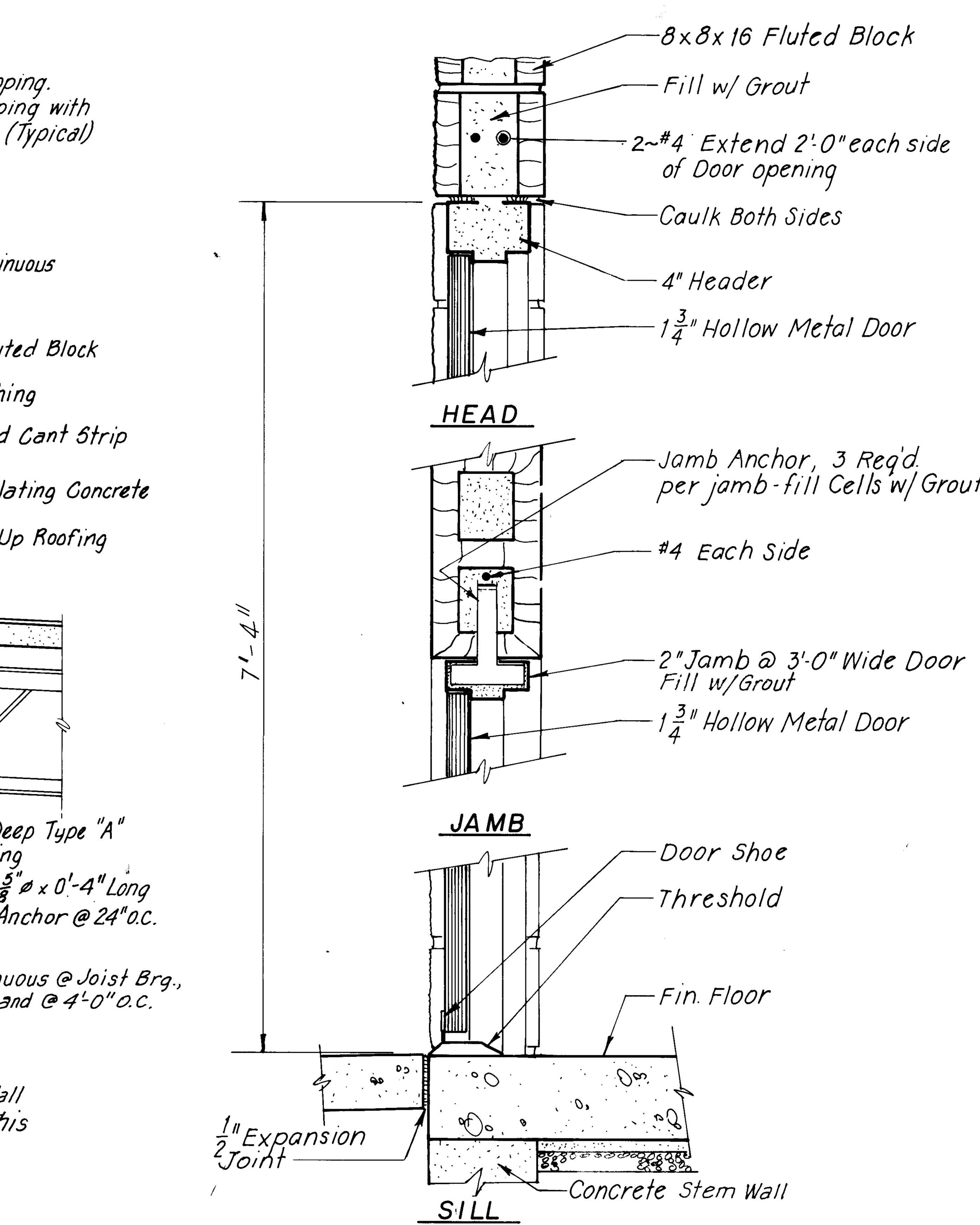


**TYPICAL DOOR SECTION**
N.T.S.

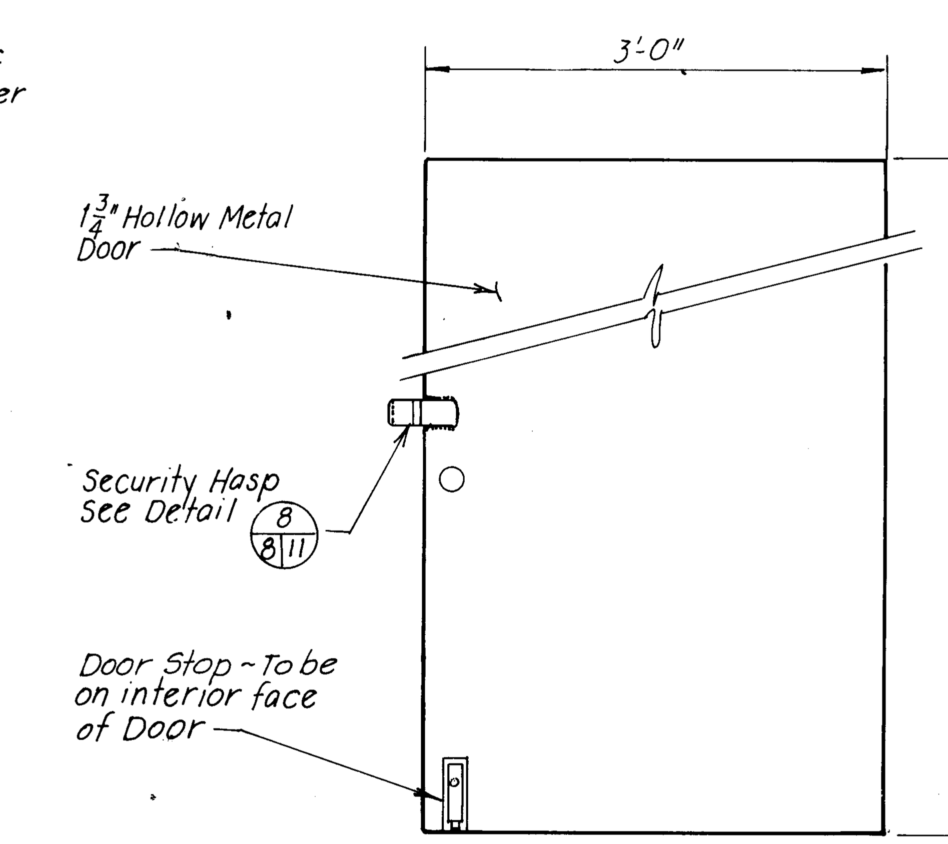


**DOOR ELEVATION**
N.T.S.

| 1 | 2 | 3 | 4 | 5 | 6 | 7 | 8 | 9 | 10 | 11 | 12 |
|---|---|---|---|---|---|---|---|---|---|---|---|
| 2 | 6 | 3 | 3 | 3 | 8 | 0 | 8 | 8 | 9 | | |

**AS BUILT INFORMATION**

CONTRACTOR / WORK STAKED BY / INSPECTOR'S ACCEPTANCE BY / FIELD VERIFICATION BY / DRAWINGS CORRECTED BY — DATE

MICRO-FILM INFORMATION — RECORDED BY — DATE — NO.

**BENCH MARKS**

**SURVEY INFORMATION**

| FIELD NOTES | | |
|---|---|---|
| NO. | BY | DATE |

**ENGINEER'S SEAL**

| NO. | DATE | REMARKS | BY |
|---|---|---|---|
| | | REVISIONS | |
| | | DESIGN | |

DESIGNED BY M.E.G.W.W. DATE 7-21-88
DRAWN BY W.C. DATE 7-21-88
CHECKED BY W.W. DATE 7-21-88

**RECORD DRAWING**
Date 4.618 [illegible]

These drawings have been revised based on field data and every reasonable attempt has been made to depict construction as actually performed

CITY OF ALBUQUERQUE
MUNICIPAL DEVELOPMENT DEPARTMENT
ENGINEERING DIVISION

TITLE: WALKER NO. 2 WELL EQUIPMENT

WALL SECTIONS

| APPROVALS | ENGINEER | DATE | APPROVALS | ENGINEER | DATE |
|---|---|---|---|---|---|
| City Engineer | [signature] | 10-19-88 | Liquid Waste | [signature] | 10/19/88 |
| A.C.E. Design | [signature] | 10-19-88 | Traffic | [signature] | 10-19-88 |
| A.C. E.-Hydrology | — | — | Water | [signature] | 10/19/88 |

DRAWING NO. 3338 | MAP NO. D-21 | SHEET 8 OF 15

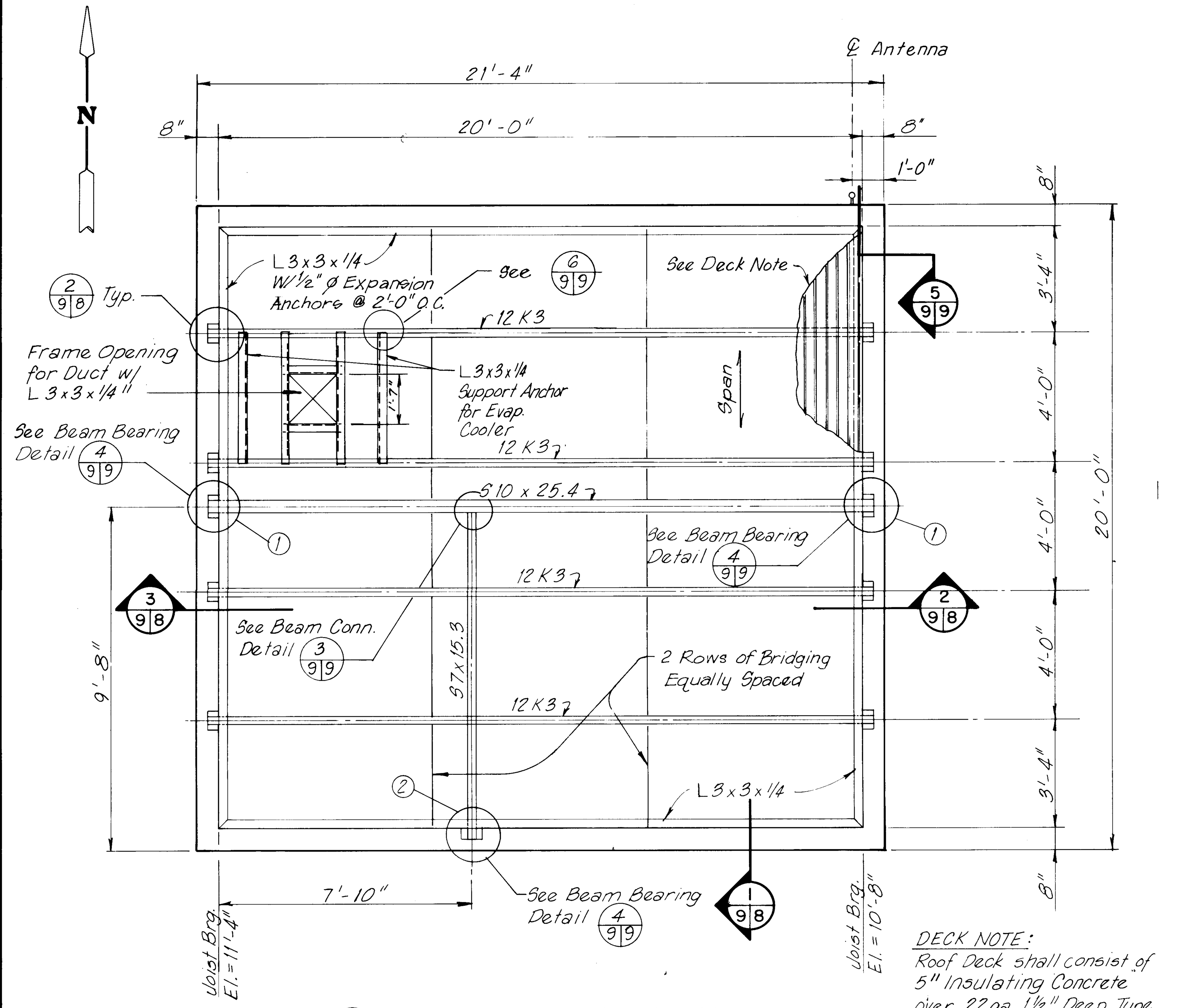


## ROOF FRAMING PLAN

1/9|9 SCALE: 3/8" = 1'-0"

DECK NOTE:
Roof Deck shall consist of 5" Insulating Concrete over 22ga. 1 1/2" Deep Type "A" Galv. Steel Decking. Fasten Deck to supports w/ No. 12 TEK Screws @ 12" o.c.

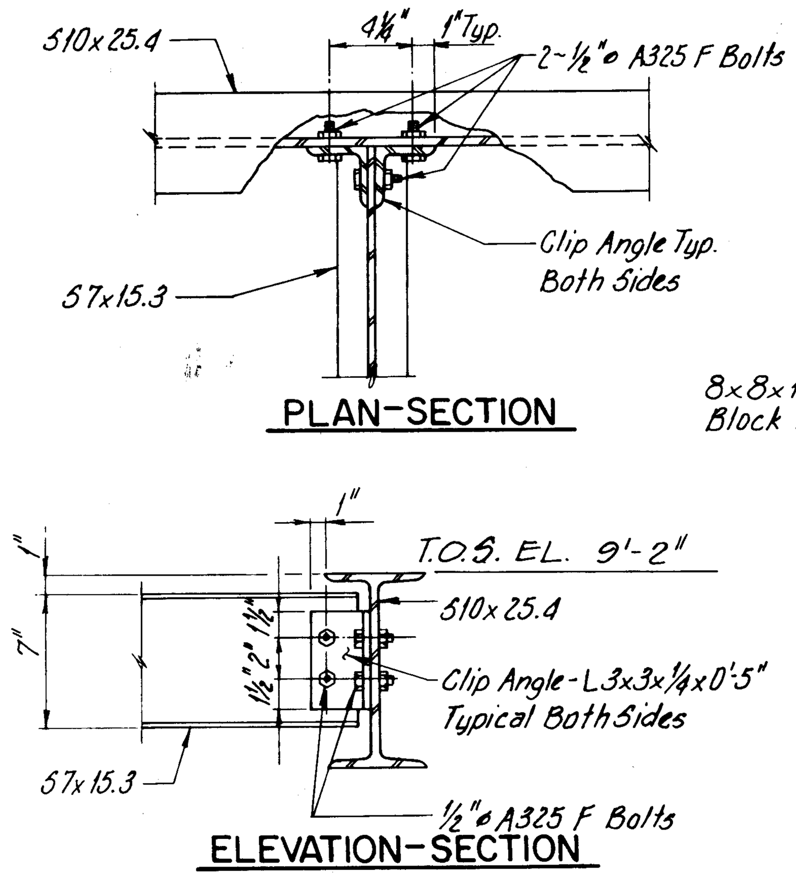


## CONNECTION DETAIL

3/9|9 SCALE: 1-1/2" = 1'-0"

**BEAM BEARING DETAIL SCHEDULE**

| Location | A | B | C | D | E | G | H | W |
|---|---|---|---|---|---|---|---|---|
| ① | S10x25.4 | 12" | 10" | 2" | 24" | 2 5/8" | 8" | 2'-0" |
| ② | S7x15.3 | 6" | 7" | 3" | 16" | 2 1/8" | 8" | 2'-0" |

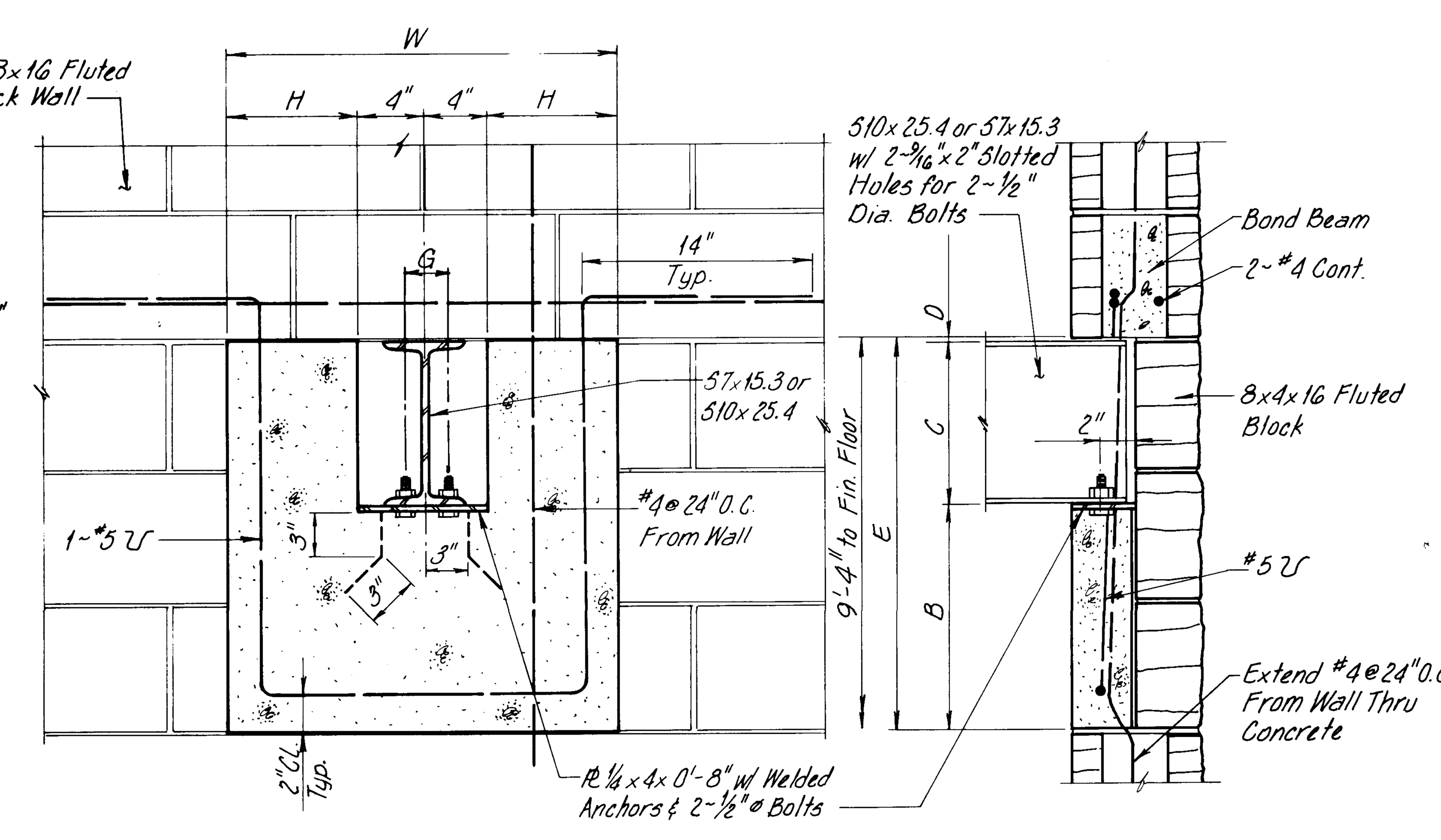


## BEAM BEARING DETAIL

4/9|9 SCALE: 1-1/2" = 1'-0"

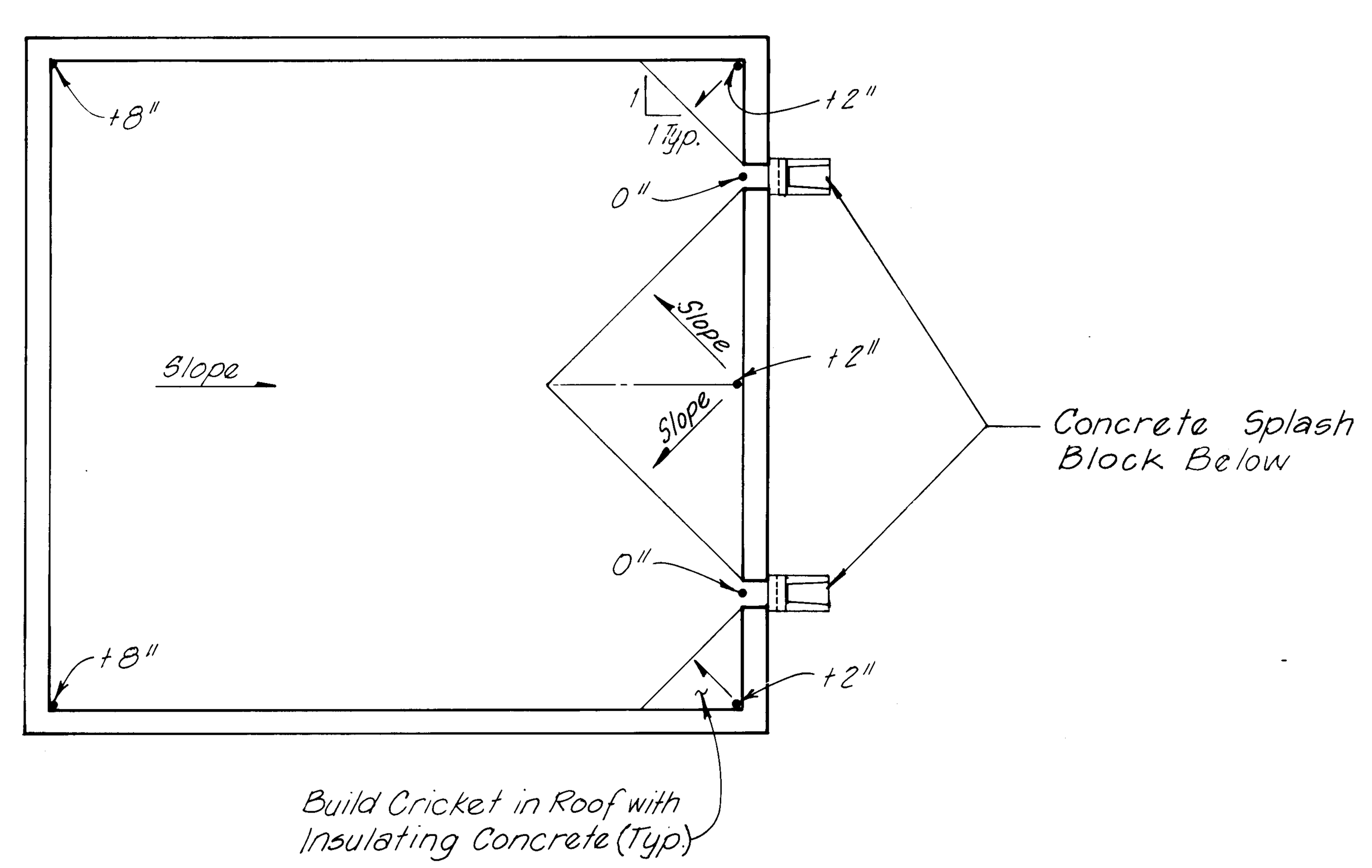


## ROOF DRAINAGE PLAN

2/9|9 SCALE: 1/4" = 1'-0"

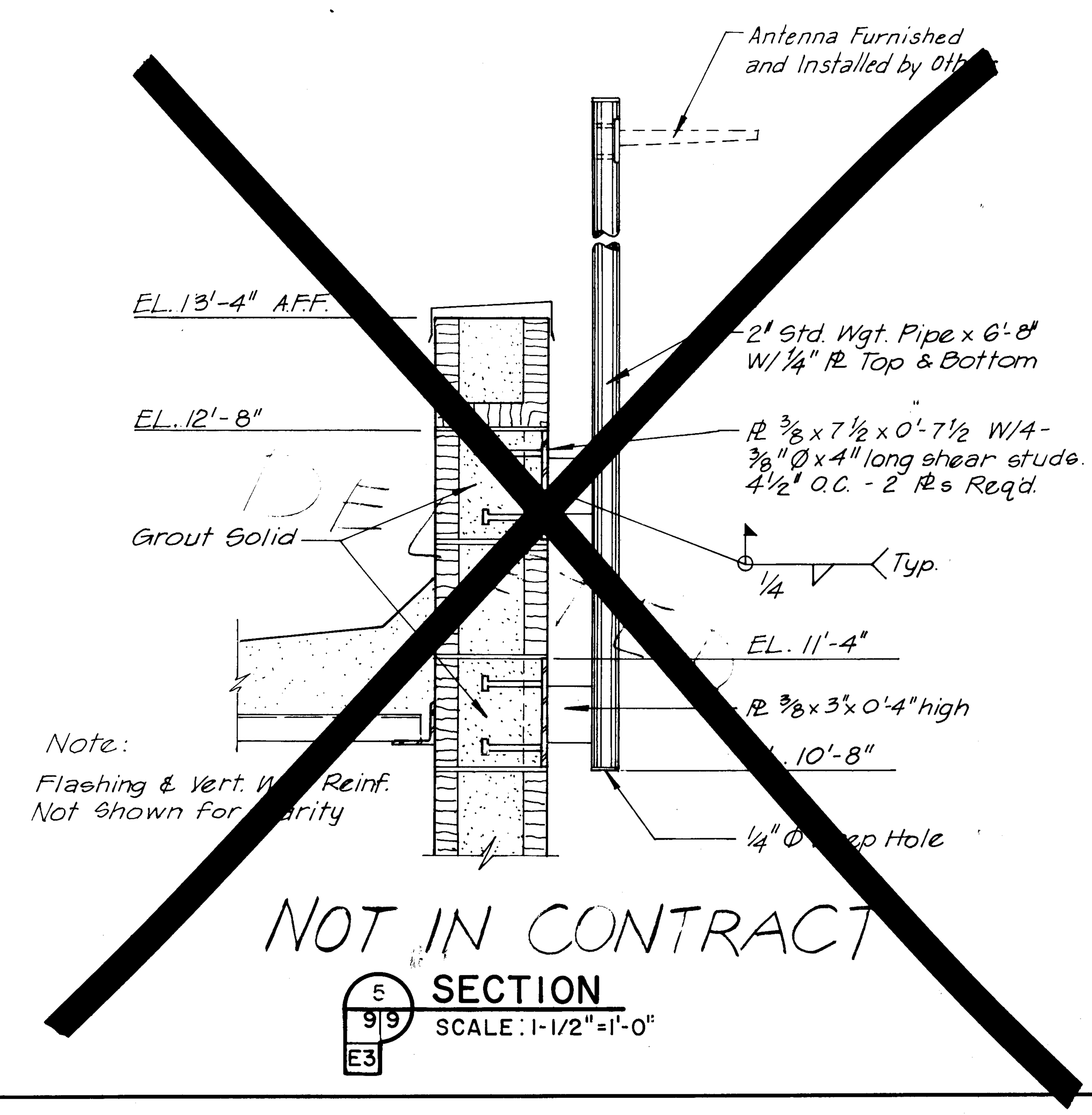


## SECTION

5/9|9 E3 SCALE: 1-1/2" = 1'-0"

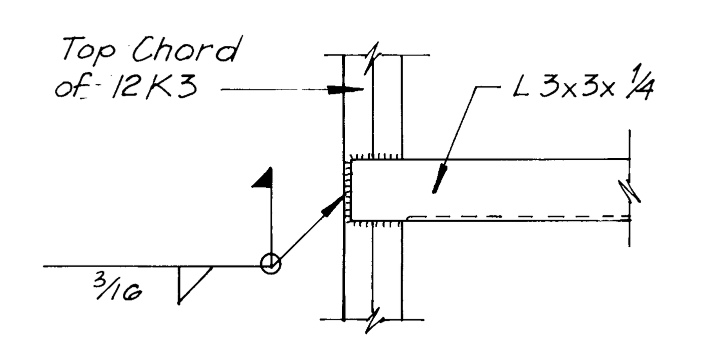


## SUPPORT AND CONNECTION DETAIL

6/9|9 SCALE: NONE

| 1 | 2 | 3 | 4 | 5 | 6 | 7 | 8 | 9 | 10 | 11 | 12 |
|---|---|---|---|---|---|---|---|---|---|---|---|
| 2 | 6 | | 3 | 3 | 3 | 8 | 0 | 9 | 8 | 9 | |

RECORD DRAWING
AUG 10 19__
Date

These drawings have been revised based on field data and every reasonable attempt has been made to depict construction as actually performed

AS BUILT INFORMATION
CONTRACTOR / WORK STAKED BY / INSPECTOR'S ACCEPTANCE BY / FIELD VERIFICATION BY / DRAWINGS CORRECTED BY — DATE

MICRO-FILM INFORMATION
RECORDED BY — DATE
NO.

BENCH MARKS

SURVEY INFORMATION
FIELD NOTES — NO. — BY — DATE

ENGINEER'S SEAL

| NO. | DATE | REMARKS | BY |
|---|---|---|---|
| | | REVISIONS | |

| DESIGN | | |
|---|---|---|
| DESIGNED BY | M.Z. & D.D. | DATE 9-29-88 |
| DRAWN BY | D.C. M.U. & K.K. | DATE 9-29-88 |
| CHECKED BY | W.W. | DATE 9-29-88 |

CITY OF ALBUQUERQUE
MUNICIPAL DEVELOPMENT DEPARTMENT
ENGINEERING DIVISION

TITLE: WALKER NO. 2 WELL EQUIPMENT

ROOF FRAMING AND ROOF DRAINAGE PLAN

| APPROVALS | ENGINEER | DATE | APPROVALS | ENGINEER | DATE |
|---|---|---|---|---|---|
| City Engineer | [signature] | 10.14.88 | Liquid Waste | [signature] | 10/19/88 |
| A.C.E. Design | [signature] | " | Traffic | [signature] | 10.19.88 |
| A.C. E.-Hydrology | — | — | Water | [signature] | 10/19/88 |

DRAWING NO. 3338 | MAP NO. D-21 | SHEET 9 OF 15

3 Equal Panels = 12'-2" (N.T.S.)
Removable Wall Panels - Typical
(℄ Angles @ Bottom of Precast Wall)
Pipe Column
Angles @ Bottom of Precast Wall
3'-0" Wide Nominal Acoustical Louver - Typ.
℄ Support Bm.
See Section 4/10
TS 6x4x.1875
℄ Ⓟs @ Bot. of T.S. for Support of Acoustical Louver - Typ.
3 Inserts B-Line Type for Wall Tie for Block Equal Distance All Panels (Typ.)
L 5x5x ½ @ Perimeter - Typ.
4" Equal Panels = 16'-0"
See Detail 8/10 OPP.
See Detail 5/10 OPP.
℄ 8" SQ Louvers - Centered ℄ bottom of panels - TYP. each end
See Detail 9/10
FRAMING PLAN AT ACOUSTICAL LOUVERS
1/10 SCALE: 1/2" = 1'-0"
12" Thick Acoustical Louvers
3 Inserts B-Line Type for Wall Tie for Block Equal Distance All Panels (Typ.)
8 x 4 x 16 Solid Fluted Block
Precast Concrete Panels
3" Std. Wgt. Pipe Column - Typ.
12'-0"
(℄ Spacing for Base Connections and Top Framing Connections)
4" Granular Base
Scarify Soil to 12" Depth and Compact to 95% (ASTM 01557)
2/10 SECTION SCALE: 1/2" = 1'-0"
Snap on Coping
Anchor Ⓟ ¼ x 4 x 0'-4" w/ ½" x 3" Long Sleeve Anchor Typical @ Top and Bottom
L5x5x½ Continuous
Fluted CMU Veneer
2" Wide x ⅛" Deep Recess in Conc. @ 20" O.C. Max.
Precast Concrete Panel
L 6x4x⅜ x Length of Panel - except at Louvers - W/ ½" ø x 3" Long Sleeve anchor at 12" O.C. & Offset 6" From Support Angle Connection.
L 6x4x½ x 0'-4" 2 Req'd Per Panel
¾" ø x 4" Sleeve Anchor
¾" x 4" x 7" Neoprene Pad 50 Durometer, 2 Req'd Per Panel
3/10 SECTION SCALE: 1" = 1'-0"
Ⓟ ¼ x 6 x 0'-4"
Symmetrical About ℄
½" Bent Ⓟ
TS 6x4x.1875
1 1/16" x 1½" Long Slotted Holes Typical - Orient as Shown
PLAN
Ⓟ ¼ x 6 x 0'-4"
L 5 x 5 x ½
TS 6 x 4 x .1875
Precast Panel
½" Clear
Cap Ⓟ ⅜ x 9 x 1'-11" w/ 4 - ¾" ø Holes for ⅝" ø A325 Bolts
3" Std. Wgt. Pipe
ELEVATION-SECTION
4/10 SECTION SCALE: 1-1/2" = 1'-0"
2-Part Epoxy Bonding Material
Ⓟ ⅜ x 11 x 0'-11" W/ 4 - ¾" ø Holes
1 1/16" x 1½" Long Slotted Holes for ⅝" ø A325 Bolts
L5x5x½
PLAN
8x8x16 Fluted Block
L5x5x½
½" ø Hole for ⅜" Bolts
Ⓟ ⅜ x 11 x 0'-11" at Corner
Precast Panel
⅝" ø x 4" Long Sleeve Anchors @ 16" O.C.
SECTION-ELEVATION
5/10 DETAIL SCALE: 1-1/2" = 1'-0"
4 - ¾" ø Holes for ⅝" ø x 6" Long Sleeve Anch.
Ⓟ ½ x 10 x 1'-0"
TS 6x4x.1875
ELEVATION
6/10 SECTION SCALE: 1-1/2" = 1'-0"
TS 6x4x.1875
Ⓟ ¼ x 3 x 1'-0"
Acoustical Louver
12 ga. Metal Screw (As Req'd By Manuf.)
ELEVATION-SECTION
7/10 SECTION SCALE: 1-1/2" = 1'-0"
℄ Bolts & Col.
Fluted CMU Veneer
Precast Panel
L5x5x½
1 1/16" x 1½" Long Slotted Holes
1 - .145 Power Driven Fasteners Per Frame Anch. (Typ.)
Cap Ⓟ ⅜ x 11 x 0'-11" w/ 4 - ¾" ø Holes for ⅝" ø A325 Bolts
3" Std. Wgt. Pipe Col.
Precast Conc. Panel
PLAN
Cap Ⓟ ⅜ x 11 x 0'-11" w/ 4 - ¾" ø Holes for ⅝" ø A325 Bolts
3" Std. Wgt. Pipe Column
1" Grout
PIPE COLUMN-ELEVATION
4 - ⅝" ø Holes for ½" ø x 4" Long Expansion Anch.
3" Std Wgt. Pipe Col.
Ⓟ ⅜ x 6 x 0'-6"
PIPE COLUMN BASE PLATE-PLAN
8/10 DETAIL SCALE: 1-1/2" = 1'-0"
Extruded Louver w/ Insect Screen. 20 ga. Galv. Steel or Aluminum. Center @ Bottom of 6 Precast Panels.
¼" Sleeve Typ. Exp. Anchor (3 Req'd)
ELEVATION
Seal
SECTION
PREFABRICATED CONCRETE PANEL BLOCKOUT DETAIL
9/10 SCALE: 1-1/2" = 1'-0"
AS BUILT INFORMATION
BENCH MARKS
SURVEY INFORMATION
FIELD NOTES
ENGINEER'S SEAL
REVISIONS
DESIGN
DESIGNED BY M.Z. & D.D. DATE 9-29-88
DRAWN BY D.C. DATE 9-29-88
CHECKED BY W.W. DATE 9-29-88
CITY OF ALBUQUERQUE
MUNICIPAL DEVELOPMENT DEPARTMENT
ENGINEERING DIVISION
TITLE: WALKER NO 2 WELL EQUIPMENT
ENCLOSURE DETAILS
City Engineer
A.C.E. Design
A.C.E.-Hydrology
Liquid Waste
Traffic
Water
RECORD DRAWING
These drawings have been revised based on field data ... reasonable attempt has been made to depict construction as actually performed
26 3338 1089
DRAWING NO. 3338
MAP NO. D-21
SHEET 10 OF 15

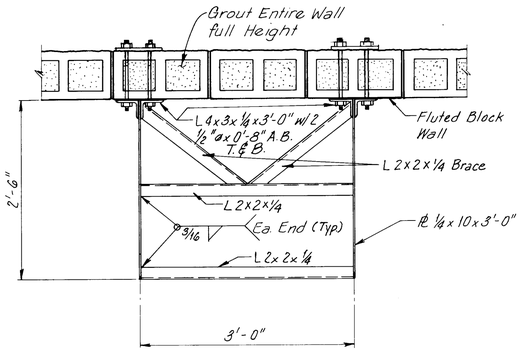


PLAN

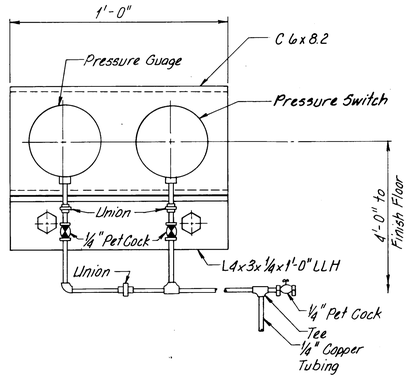


ELEVATION

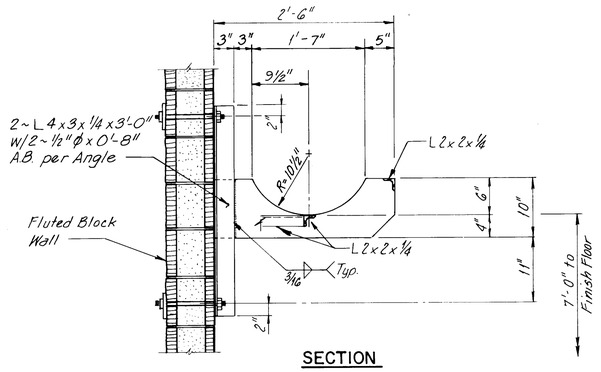


SECTION

## 1/6/11 OIL DRUM SUPPORT DETAIL

SCALE 1"= 1'-0"

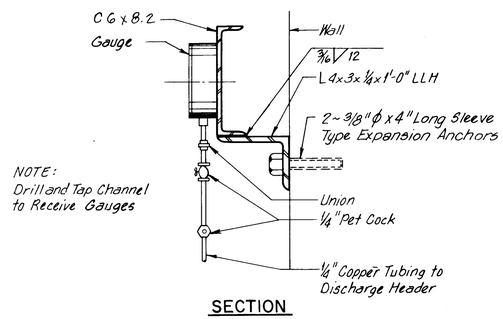


SECTION

## 3/6/11 GAUGE DETAIL

NOT TO SCALE

E3

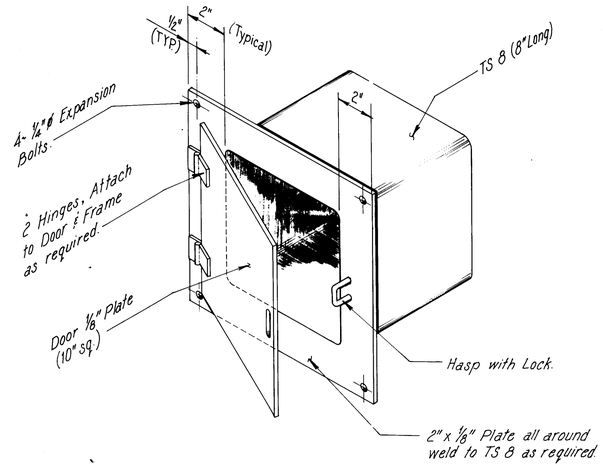


## 20/4/11 PUMP LUBE OIL ACCESS DOOR

SCALE: 3"= 1'-0"

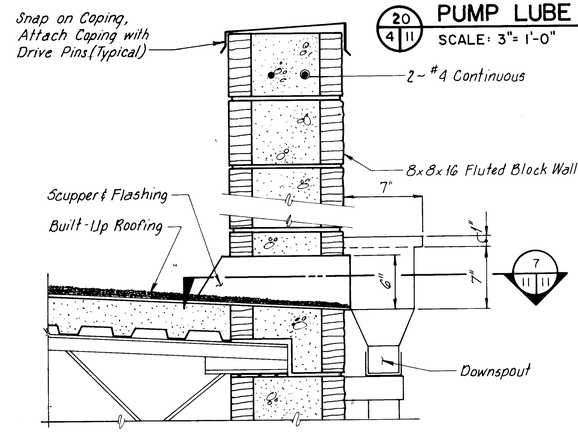


## 6/8/11 SCUPPER DOWNSPOUT SECTION

SCALE: 1-1/2"= 1'-0"

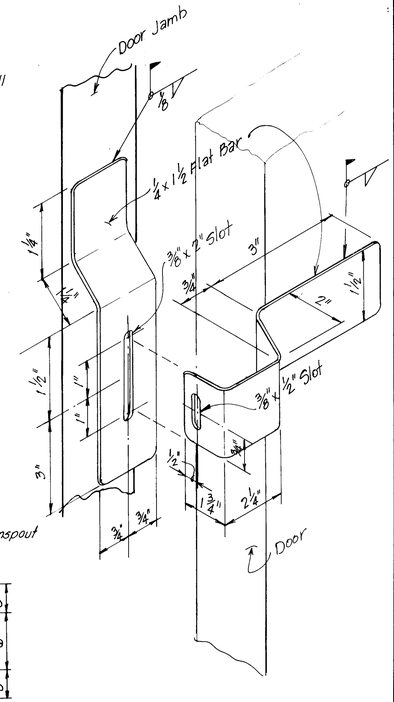


## 8/8/11 DOOR HASP DETAIL

N.T.S.

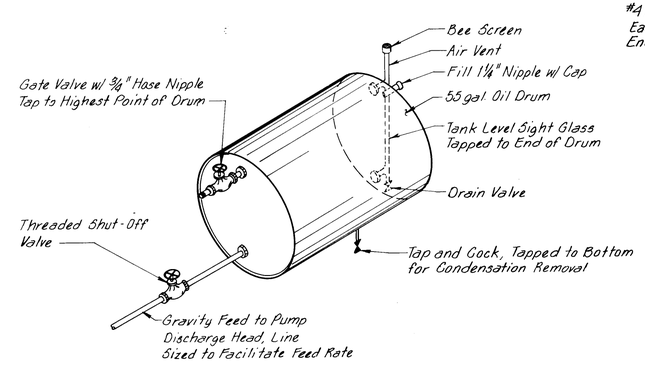


## 2/6/11 OIL DRUM DETAIL

NOT TO SCALE

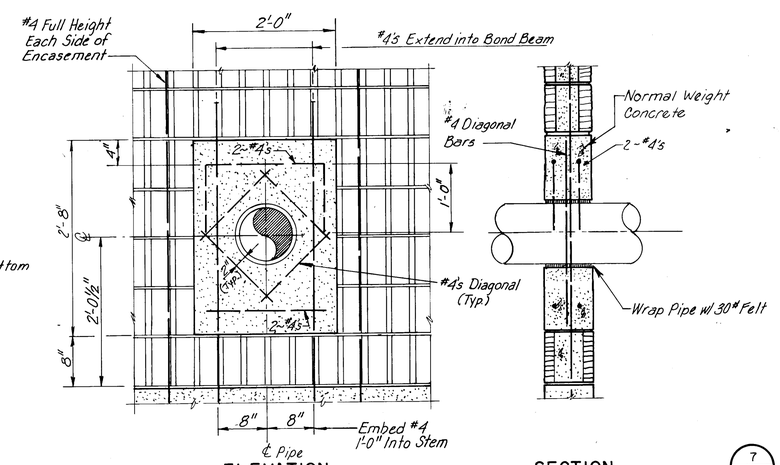


## 4/6/11 PIPE WALL OPENING DETAIL

SCALE: 1"= 1'-0"

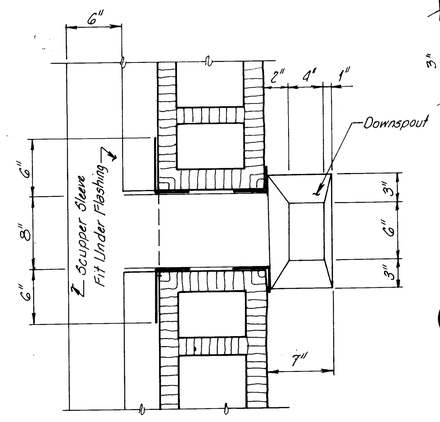


## 7/11/11 SCUPPER DOWNSPOUT PLAN

SCALE: 1-1/2"= 1'-0"

RECORD DRAWINGS
Date AUG 10 1989
These drawings have been revised based on field ... reasonable attempt has been made to depict construction as actually performed

| 1 | 2 | 3 | 4 | 5 | 6 | 7 | 8 | 9 | 10 | 11 | 12 |
|---|---|---|---|---|---|---|---|---|---|---|---|
| 2 | 6 | | 3 | 3 | 3 | 8 | 1 | 1 | 8 | 9 | |

AS BUILT INFORMATION
CONTRACTOR
WORK STAKED BY — DATE
WORK INSPECTED — DATE
ACCEPTANCE BY — DATE
FIELD VERIFICATION BY — DATE
DRAWINGS CORRECTED BY — DATE
MICRO-FILM INFORMATION
RECORDED BY — DATE
NO.

BENCH MARKS

SURVEY INFORMATION
FIELD NOTES

| NO. | BY | DATE |
|---|---|---|
| | | |

ENGINEER'S SEAL

| NO. | DATE | REMARKS | BY |
|---|---|---|---|
| | | REVISIONS | |

DESIGNED BY M.Z. & D.D. — DATE 9-29-88
DRAWN BY W.D. — DATE 9-29-88
CHECKED BY W.W. — DATE 9-29-88

CITY OF ALBUQUERQUE
MUNICIPAL DEVELOPMENT DEPARTMENT
ENGINEERING DIVISION

TITLE: WALKER NO. 2 WELL EQUIPMENT

MISCELLANEOUS DETAILS

| APPROVALS | ENGINEER | DATE | APPROVALS | ENGINEER | DATE |
|---|---|---|---|---|---|
| City Engineer | | 10-19-88 | Liquid Waste | | 10/19/88 |
| A.C.E. Design | | " " | Traffic | | 10-19-88 |
| A.C.E.-Hydrology | — | — | Water | | 10/19/88 |

DRAWING NO. 3338 — MAP NO. D-21 — SHEET 11 OF 15

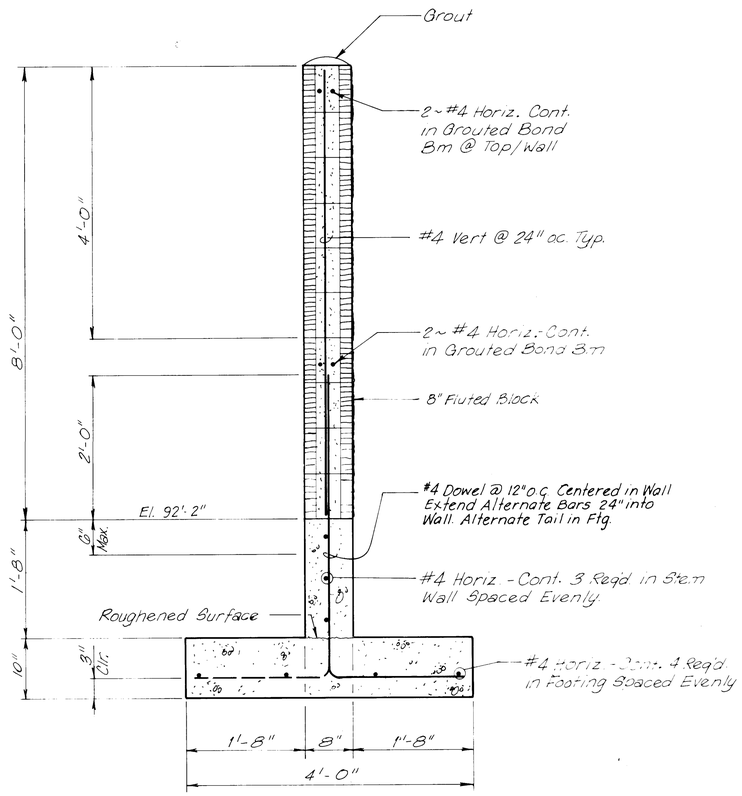


## SCREEN WALL AROUND SWITCHGEAR

1 / 5 12 / 6

SCALE: 1" = 1'-0"

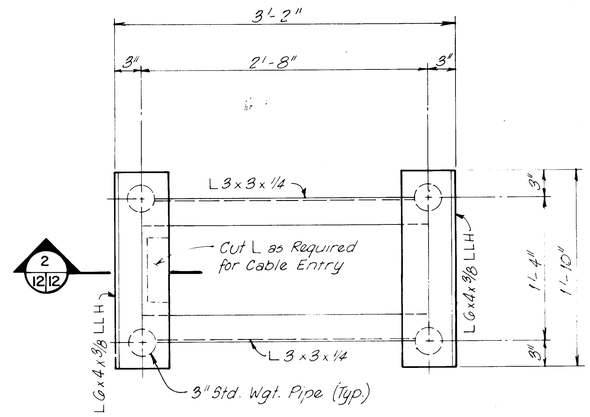


PLAN

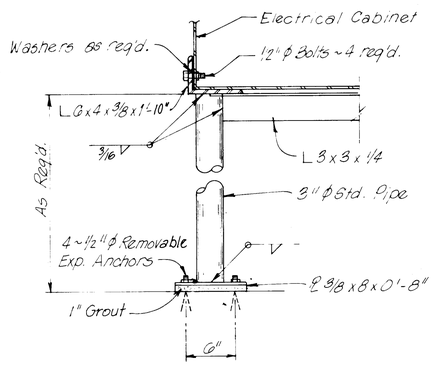


SECTION

## MOTOR SURGE CAPACITOR STAND DETAIL

2 / 12 12 / E-3

SCALE: 1 1/2" = 1'-0"

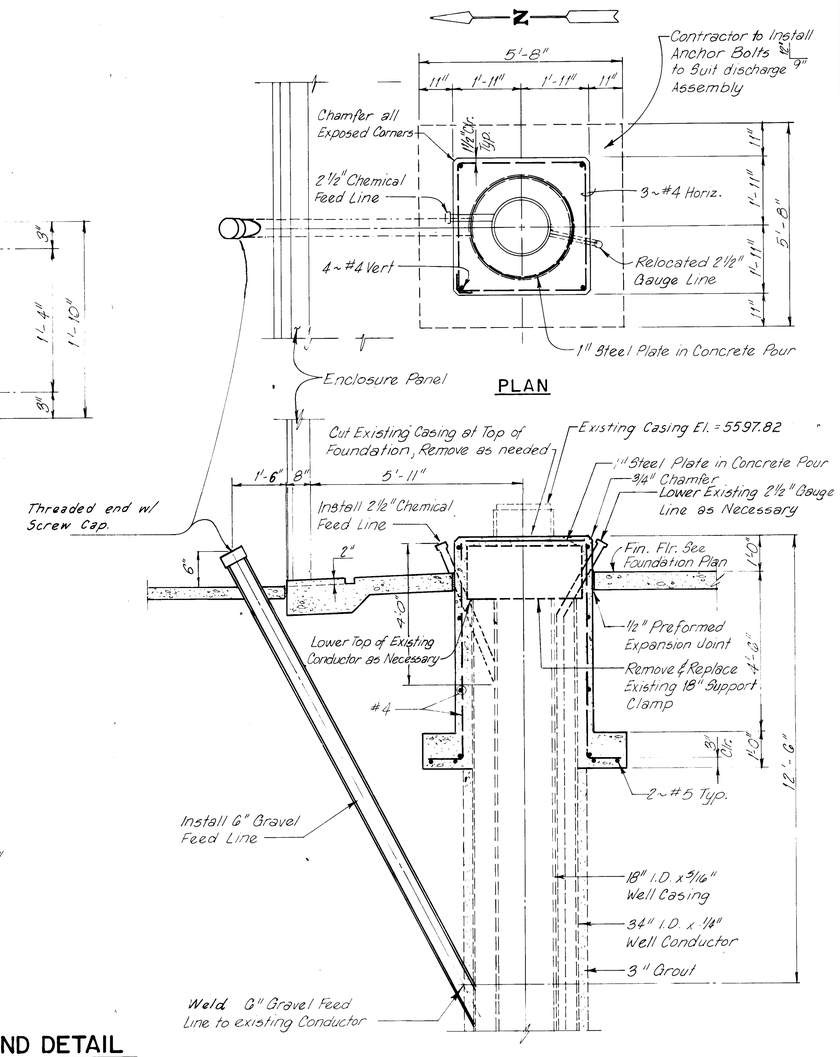


PLAN

SECTION

## PUMP FOUNDATION DETAIL

3 / 5 12

SCALE: 1/2" = 1'-0"

NOTE:
Contractor shall be responsible for maintaining the position of the existing well casing during construction and rebuilding well head and pump foundation to the new elevations as shown on the drawings. The estimated weight that is to be supported during Construction is 109,474 LBS. Contractor will submit details for casing support to the Engineer for approval prior to any Construction

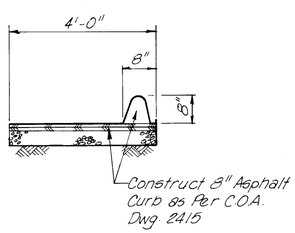


## SECTION

A / 3 12

N.T.S.

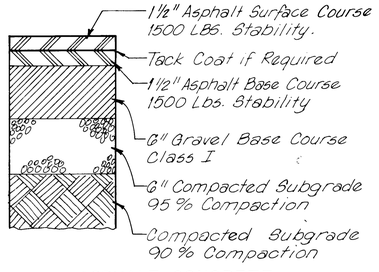


ASPHALT CONCRETE

## PAVEMENT SECTION

B / 12 12

N.T.S.

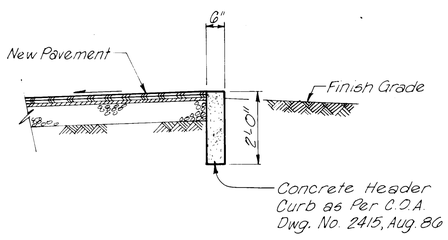


## SECTION

C / 3 12

N.T.S.

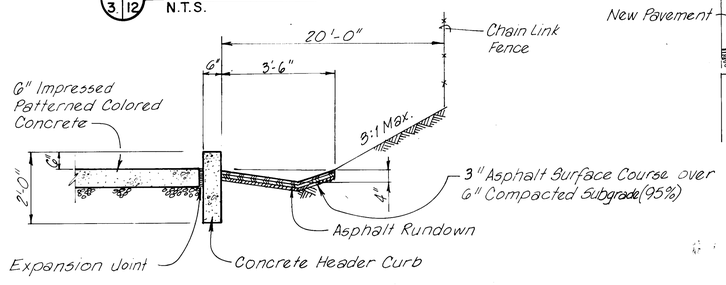


## SECTION

D / 3 12

N.T.S.

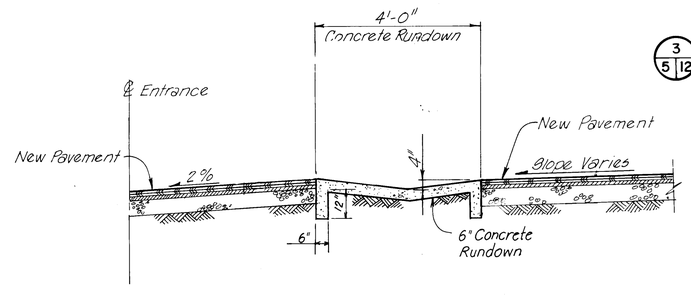


## SECTION

E / 3 12

N.T.S.

1 2 3 4 5 6 7 8 9 10 11 12
2 6 3 3 3 8 1 2 8 9

RECORD DRAWING
AUG 10 1989
Date
These drawings have been revised based on field data [illegible] reasonable attempt has been made to depict construction as actually performed.

AS BUILT INFORMATION

| CONTRACTOR | DATE |
|---|---|
| WORK STAKED BY | |
| INSPECTOR'S ACCEPTANCE BY | DATE |
| FIELD VERIFICATION BY | DATE |
| DRAWINGS CORRECTED BY | DATE |

MICRO-FILM INFORMATION

| RECORDED BY | DATE |
|---|---|
| NO. | |

BENCH MARKS

SURVEY INFORMATION

FIELD NOTES

| NO. | BY | DATE |
|---|---|---|
| | | |

ENGINEER'S SEAL

| NO. | DATE | REMARKS | BY |
|---|---|---|---|
| | | REVISIONS | |

| | | |
|---|---|---|
| DESIGN | DATE 9-29-88 | |
| DESIGNED BY M.Z. & D.D. | DATE 9-29-88 | |
| DRAWN BY M.J. | DATE 9-29-88 | |
| CHECKED BY N.W. | | |

CITY OF ALBUQUERQUE
MUNICIPAL DEVELOPMENT DEPARTMENT
ENGINEERING DIVISION

TITLE: WALKER NO. 2 WELL EQUIPMENT
PUMP FOUNDATION AND
MISCELLANEOUS DETAILS

| APPROVALS | ENGINEER | DATE | APPROVALS | ENGINEER | DATE |
|---|---|---|---|---|---|
| City Engineer | | 10-19-88 | Liquid Waste | | 10/19/88 |
| A.C.E. Design | | 10-19-88 | Traffic | | 10-19-88 |
| A.C.E.-Hydrology | — | — | Water | | 10/19/88 |

| DRAWING NO. | MAP NO. | SHEET | OF |
|---|---|---|---|
| 3338 | D-21 | 12 | 15 |

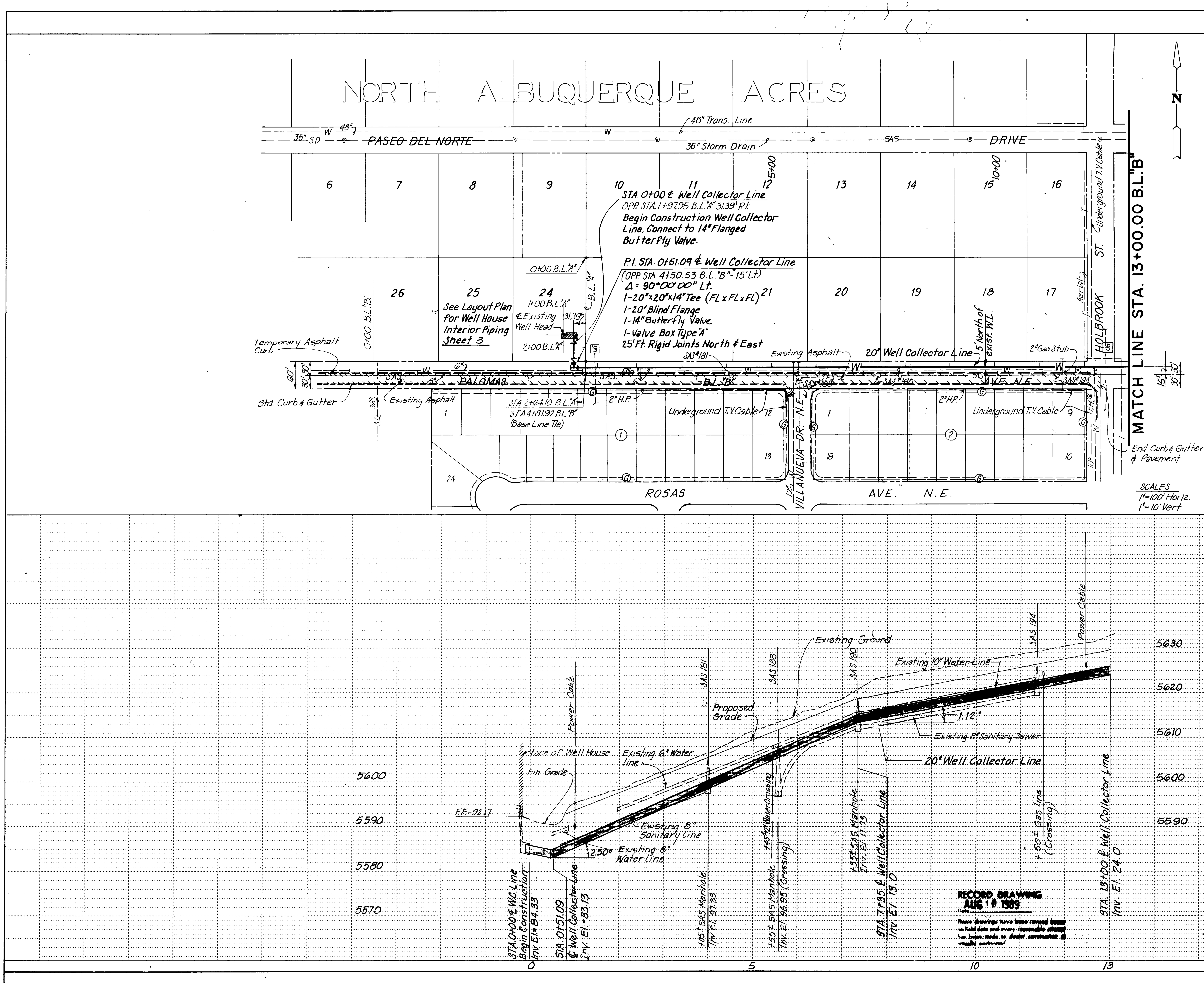


CONSTRUCTION NOTES:

1. A minimum clearance of 12" is req'd. between any utility Line and an underground power cable. Approximate locations of crossings are shown on the drawings. The Blue Stake Program shall be contacted to locate cables. Contractor shall locate cable crossing-elevations prior to installation of Wash or Well Collector lines. Forty Eight (48) hours, prior to excavation in the area of the crossings, notice must be given to PNM to allow PNM personnel to be on-site during excavation and backfill at the crossings. Notice may be given by calling Jim Vann, Ph. 761-3426 or PNM's Dispatcher at 344-9779

2. A minimum of five (5) feet of undisturbed soil must be maintained between the base of PNM's structures (located at northeast and Northwest corners of Holbrook St. and Palomas Ave) and the lip of the Pipe Trench. If this separation is unattainable, Contractor shall notify PNM forty-eight (48) hours in advance of excavation to arrange for structures to be supported

AS BUILT INFORMATION: CONTRACTOR / WORK STAKED BY / INSPECTOR'S ACCEPTANCE BY / FIELD VERIFICATION BY / DRAWINGS CORRECTED BY — DATE

MICRO-FILM INFORMATION: RECORDED BY — DATE; NO.

BENCH MARKS: "C21A-1978" Brass Tablet Set in Top of Concrete Post Flush with ground @ Corner of Paseo Del Norte and Holbrook St. N.E. El. = 5634.65

SURVEY INFORMATION — FIELD NOTES: NO. / BY / DATE

ENGINEER'S SEAL

REVISIONS: NO. / DATE / REMARKS / BY

DESIGN: DESIGNED BY W.W.W. DATE 9-88; DRAWN BY Geo C. DATE 9-88; CHECKED BY Jim T. DATE 9-88

26 3338 1389

CITY OF ALBUQUERQUE
MUNICIPAL DEVELOPMENT DEPARTMENT
ENGINEERING DIVISION

TITLE: WALKER NO. 2 WELL EQUIPMENT

PLAN AND PROFILE WELL COLLECTOR LINE

| APPROVALS | ENGINEER | DATE | APPROVALS | ENGINEER | DATE |
|---|---|---|---|---|---|
| City Engineer | [signature] | 11-1-88 | Liquid Waste | [signature] | 10/19/88 |
| A.C.E.-Design | [signature] | " | Traffic | [signature] | 10-19-88 |
| A.C.E.-Hydrology | — | — | Water | [signature] | 10/19/88 |

DRAWING NO. 3338 | MAP NO. D-21 | SHEET 13 OF 15

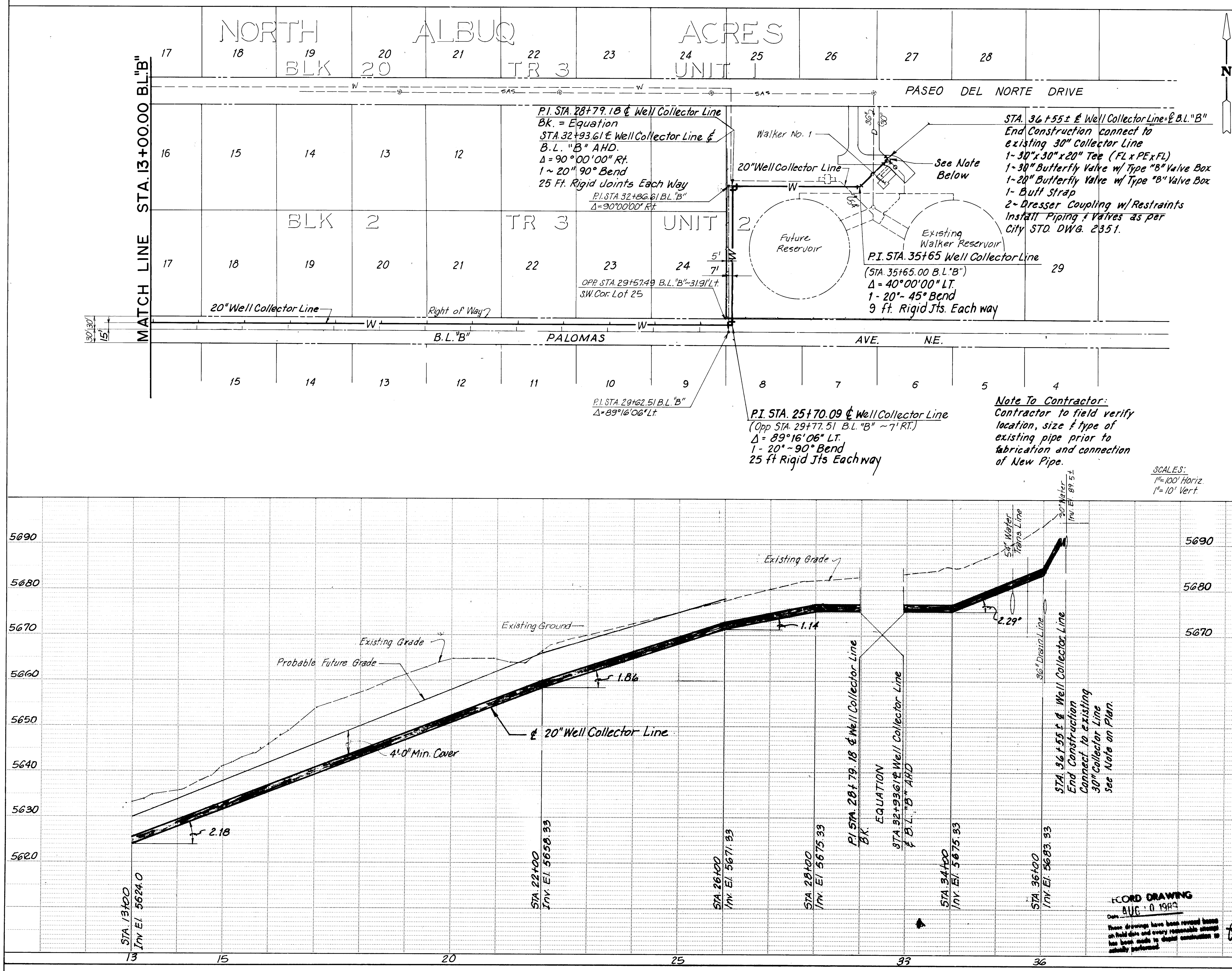


## CONSTRUCTION NOTES:

1. A minimum clearance of 12" is req'd between any utility line and an underground power cable. Approximate locations of crossing are shown on the drawings. The Blue Stake Program shall be contacted to locate cables. Contractor shall locate cable crossing elevations prior to installation of Wash or Well Collector lines. Forty-Eight (48) hours prior to excavation in the area of the crossings, notice must be given to PNM to allow PNM personnel to be on-Site during excavation and backfill at the crossings. Notice may be given by calling Jim Vann, Ph. 761-3426 or PNM's Dispatcher at 344-9779.

**AS BUILT INFORMATION**: Contractor / Work Staked By / Inspector's Acceptance By / Field Verification By / Drawings Corrected By — Date

**MICRO-FILM INFORMATION**: Recorded By — Date — No.

**BENCH MARKS**: "C21A-1978" Brass Tablet Set in Top of Concrete Post Flush with Ground @ Corner of Paseo Del Norte and Holbrook St. N.E. El=5634.65

**SURVEY INFORMATION**

| NO. | FIELD NOTES BY | DATE |
|---|---|---|
| | | |

**ENGINEER'S SEAL**

| NO. | DATE | REMARKS | BY |
|---|---|---|---|
| | | | |

REVISIONS

| DESIGN | | |
|---|---|---|
| DESIGNED BY | W W W | DATE 9-88 |
| DRAWN BY | G.C. | DATE 9-88 |
| CHECKED BY | J.T. | DATE 9-88 |

26 | 3338 | 1489

RECORD DRAWING
Date AUG 10 1989
These drawings have been revised based on field data and every reasonable attempt has been made to depict construction as actually performed.

CITY OF ALBUQUERQUE
MUNICIPAL DEVELOPMENT DEPARTMENT
ENGINEERING DIVISION

TITLE: WALKER NO. 2 WELL EQUIPMENT
# PLAN AND PROFILE WELL COLLECTOR LINE

| APPROVALS | ENGINEER | DATE | APPROVALS | ENGINEER | DATE |
|---|---|---|---|---|---|
| City Engineer | | 10.19.88 | Liquid Waste | PE10 | 10/19/88 |
| A.C.E.-Design | | " " | Traffic | | 10-19-88 |
| A.C.E.-Hydrology | — | — | Water | | 10/19/88 |

DRAWING NO. 3338 | MAP NO. D-21 | SHEET 14 OF 15

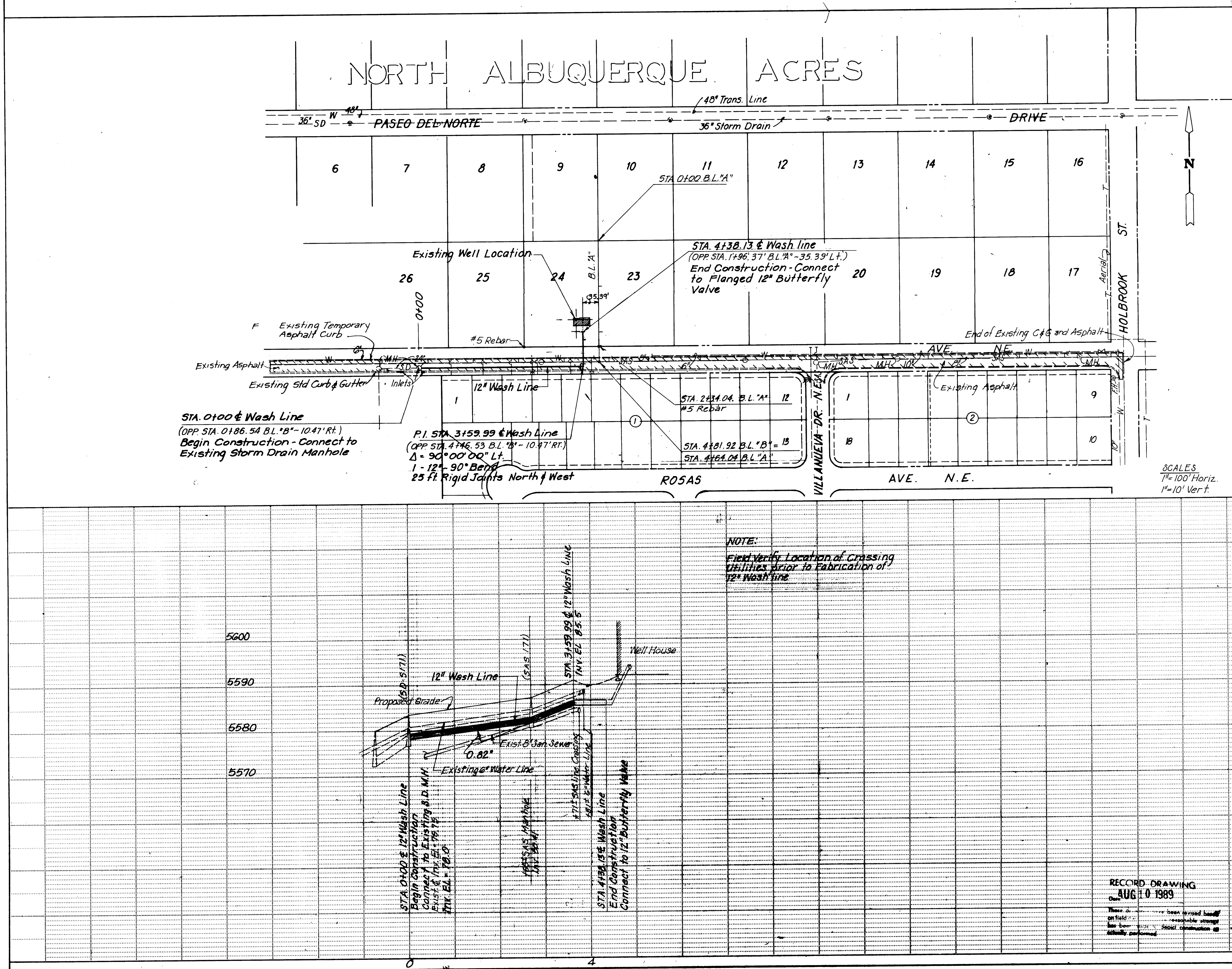


## CONSTRUCTION NOTES:

1. Pavement Removal & Replacement for Wash Line, Construction shall be accordance with Std. Spec's Dwg. #2465 (Aug. 1986)

2. A minimum clearance of 12" is req'd. between any utility line and on underground power cable. Approximate locations of crossings are shown on the drawings. The Blue Stake Program shall be contacted to locate cables. Contractor shall locate cable crossing elevations prior to installation of Wash or Well Collector lines. Forty Eight (48) hours, prior to excavation in the area of the crossings, notice must be given to PNM to allow PNM personnel to be on site during excavation and backfill at the crossings. Notice may be given by calling Jim Vann, Ph. 761-3426 or PNM's Dispatcher at 344-9779.

**AS BUILT INFORMATION**

| | |
|---|---|
| CONTRACTOR | DATE |
| WORK STAKED BY | DATE |
| INSPECTOR'S ACCEPTANCE BY | DATE |
| FIELD VERIFICATION BY | DATE |
| DRAWINGS CORRECTED BY | DATE |

**MICRO-FILM INFORMATION**

| | |
|---|---|
| RECORDED BY | DATE |
| NO. | |

**BENCH MARKS**

"C21A-1978" Brass Tablet Set in Top of Concrete Post Flush with Ground at Corner of Paseo Del Norte and Holbrook St. N.E. El=5634.65

**SURVEY INFORMATION**

| FIELD NOTES | | |
|---|---|---|
| NO. | BY | DATE |

ENGINEER'S SEAL

**REVISIONS**

| NO. | DATE | REMARKS | BY |
|---|---|---|---|

**DESIGN**

| | |
|---|---|
| DESIGNED BY W.W.W. | DATE 9-88 |
| DRAWN BY Geo C. | DATE 9-88 |
| CHECKED BY Jim T. | DATE 9-88 |

| 1 | 2 | 3 | 4 | 5 | 6 | 7 | 8 | 9 | 10 | 11 | 12 |
|---|---|---|---|---|---|---|---|---|---|---|---|
| 2 | 6 | | 3 | 3 | 3 | 8 | / | 5 | 8 | 9 | |

RECORD DRAWING
AUG 10 1989

These drawings have been revised based on field information and reasonable attempt has been made to record construction as actually performed.

**CITY OF ALBUQUERQUE**
**MUNICIPAL DEVELOPMENT DEPARTMENT**
**ENGINEERING DIVISION**

TITLE: WALKER NO. 2 WELL EQUIPMENT

PLAN AND PROFILE WASH LINE

| APPROVALS | ENGINEER | DATE | APPROVALS | ENGINEER | DATE |
|---|---|---|---|---|---|
| City Engineer | [signature] | 10-19-88 | Liquid Waste | [signature] | 10/19/88 |
| A.C.E.-Design | | | Traffic | [signature] | 10-19-88 |
| A.C.E.-Hydrology | — | — | Water | [signature] | 10/19/88 |

| DRAWING NO. | MAP NO. | SHEET |
|---|---|---|
| 3338 | D-21 | 15 OF 15 |

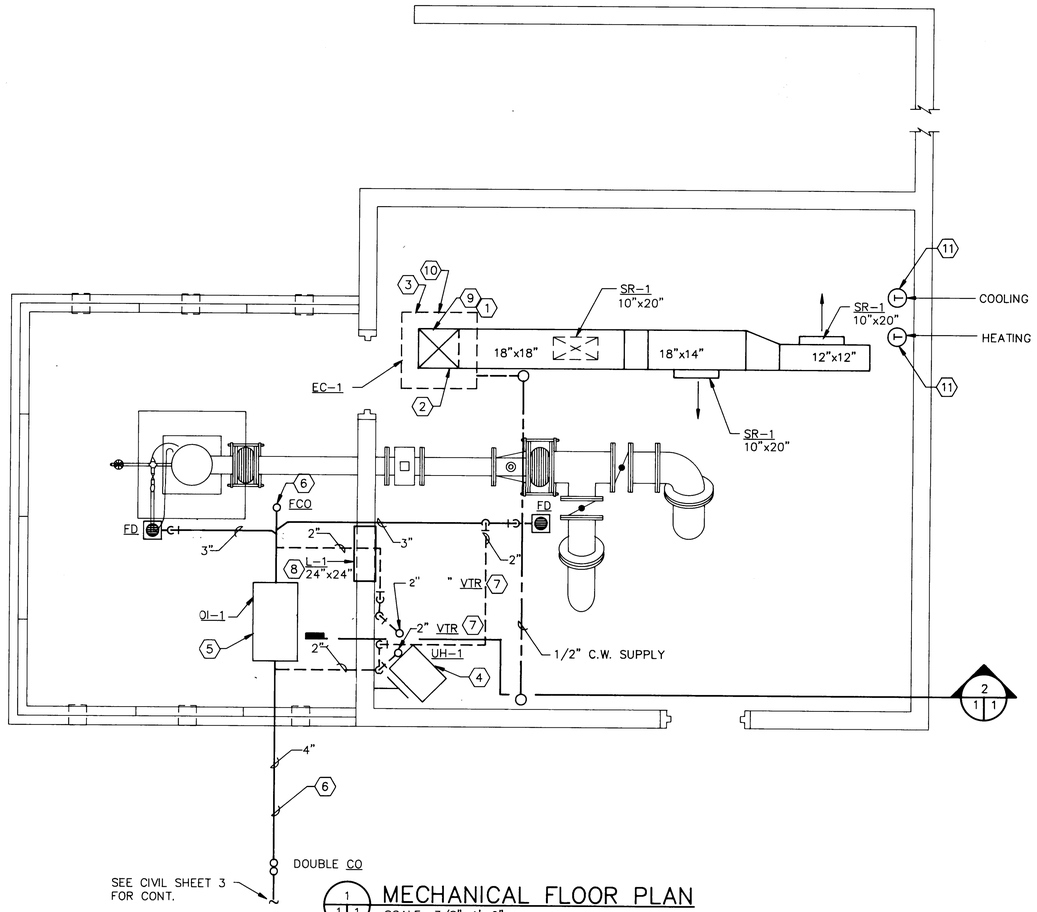


1/1 MECHANICAL FLOOR PLAN
SCALE: 3/8"=1'-0"

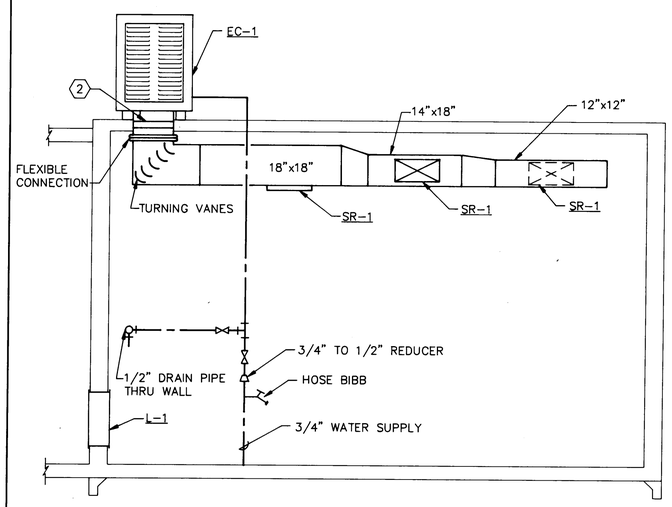


2/1 EQUIPMENT ROOM SECTION
SCALE: 3/8"=1'-0"

## KEYED NOTES:

1. SEE DETAIL 1, ON SHEET M2 FOR ROOF FRAMING FOR DUCT PENETRATION.
2. SEE DETAIL 8, ON SHEET M2 FOR SECURITY BAR INSTALLATION.
3. INSTALL ON 4"x4"x4'-4" LONG REDWOOD SKIDS MOPPED INTO ROOF. SEE DETAIL 9, ON SHEET M2.
4. UNIT HEATER TO BE WALL MOUNTED. SEE DETAIL 6, ON SHEET M2 FOR MOUNTING BRACKET.
5. SEE DETAIL 3, ON SHEET M2 FOR OIL INTERCEPTOR DETAIL.
6. SEE DETAIL 5, ON SHEET M2 FOR CLEANOUT.
7. SEE DETAIL 4, ON SHEET M2 FOR VENT THRU ROOF DETAIL.
8. ATTACH TO MASONRY WITH 1/4" DIA. EXPANSION ANCHOR.
9. SEE DETAIL 2 ON SHEET M2, FOR REQUIRED FLASHING AT ROOF PENETRATION.
10. SEE DETAIL 7, SHEET M2 FOR EVAPORATIVE COOLER INSTALLATION REQUIRMENTS.
11. LABEL THERMOSTAT AS TO TYPE OF AIR CONDITIONING CONTROLLED.

## LEGEND

- (T) THERMOSTAT
- DRAIN PIPING
- WATER PIPING
- VENT PIPING

## EQUIPMENT SCHEDULE

| SYMBOL | DESCRIPTION |
|---|---|
| EC-1 | EVAPORATIVE COOLER: TWO SPEED, DRIP TYPE EVAPORATIVE COOLER WITH DOWN DISCHARGE. BLOWER MOTOR SHALL BE TWO WINDING TYPE, SPECIFICALLY DESIGNED FOR USE IN EVAPORATIVE COOLER APPLICATION WITH SEALED FOR LIFE BEARING AND ADJUSTABLE SHEAVE. FURNISH COMPLETE WITH WALL MOUNTED DUAL SETPOINT THERMOSTAT. FOR THERMOSTAT SEE SPECIFICATION 15980. ESSICK OR EQUAL<br>SYMBOL MODEL CFM S.P. H.P V/P SPEED<br>EC-1 5615D-2 3200/1600 0.4" 1/2 120/1 2 |
| UH-1 | UNIT HEATER: SHALL BE ELECTRIC RESISTANCE WALL MOUNTED, HORIZONTAL UNIT HEATER. THE CABINET SHALL BE 18 GAUGE STEEL WITH FACTORY BAKED ENAMEL FINISH. INDIVIDUAL ADJUSTABLE LOUVERS FOR DIRECTIONAL AIR FLOW. THE ELECTRICAL HEATING BANK SHALL HAVE AUTOMATIC RESET THERMAL OVERLOADS PROTECTION. FURNISH COMPLETE WITH WALL MOUNTING BRACKET AND WALL MOUNTED THERMOSTAT. FOR THERMOSTAT SEE SPECIFICATION 15980. CHROMALOX OR EQUAL.<br>SYMBOL MODEL WATTS BTUH CFM V/P<br>UH-1 MUH-10-8 10 KW 34.1 650 208/3 |
| SR-1 | SUPPLY REGISTERS: KRUEGER SERIES 5800V. UNIT SHALL BE ALL ALUMINUM CONSTRUCTION WITH FACTORY APPLIED FINISH AND OPPOSED BLADE DAMPERS. SEE PLAN FOR SIZES. |
| L-1 | LOUVERS: ALL ALUMINUM CONSTRUCTION BACKDRAFT DAMPER WITH COUNTERBALANCING AND INNERFLANGED MOUNTING FRAME WITH A FACTORY APPLIED BAKED ENAMEL. AIR BALANCE INC. MODEL 1001 H. SEE PLANS FOR SIZE. |
| OI-1 | OIL INTERCEPTOR: FABRICATED STEEL OIL INTERCEPTOR WITH ADJUSTABLE BRASS DRAW-OFF TUBE, WHITE DUCO COATING INSIDE AND OUT, REMOVEABLE SEDIMENT BASKET, FLOW CONTROL FITTINGS CLEANOUT, STEEL EXTENSION TO FINISHED FLOOR IN ACCORDANCE WITH ACTUAL FIELD MEASUREMENT. 4" INLET AND OUTLET SIZES AND 50 GPM CAPACITY WITH VENT CAPS. SMITH NO. 8550. |
| FD | FLOOR DRAIN: ZURN-415 FLOOR AND SHOWER DRAIN WITH TYPE B STRAINER, CAST IRON DRAIN BODY CONTRUCTION WITH COMBINATION MEMBRANE FLASHING CAPE AND ANCHORING FLANGE. ADJUSTABLE TYPE NICKEL BRONZE STRAINER AND VANDEL PROOF SCREWS. |
| FCO | FLOOR CLEAN OUT: ZURN-1400-Z CAST IRON WITH MEMBRANE AND CLAMPING COLLAR AND ROUND NICKEL BRONZE TAP. |
| CO | CLEAN OUT: CAST IRON CLEANOUT WITH ADJUSTABLE ROUND TOP, SMITH NO. 4231. |

AS BUILT INFORMATION
CONTRACTOR
WORK STAKED BY DATE
INSPECTOR ACCEPTANCE BY DATE
FIELD VERIFICATION BY DATE
DRAWINGS CORRECTED BY DATE
MICRO-FILM INFORMATION
RECORDED BY DATE
NO.

BENCH MARKS

SURVEY INFORMATION
FIELD NOTES
NO. BY DATE

ENGINEER'S SEAL

| NO. | DATE | REMARKS | BY |
|---|---|---|---|
| | | REVISIONS | |

DESIGN
DESIGNED BY CHARLOTTE WELTY DATE 9-29-88
DRAWN BY DIANA CASIAS DATE 9-29-88
CHECKED BY RON MALONE DATE 9-29-88

8 2 3 4 5 6 7 8 9 10 11 12
2 6 3 3 3 8 1 6 8 9

8056.11MD1/8056WW1

RECORD DRAWING
Date AUG 10 1989
These drawings have been revised based on field data and every reasonable attempt has been made to depict construction as actually performed

CITY OF ALBUQUERQUE
MUNICIPAL DEVELOPMENT DEPARTMENT
ENGINEERING DIVISION

TITLE: WALKER NO.2 WELL EQUIPMENT
MECHANICAL FLOOR PLAN

| APPROVALS | ENGINEER | DATE | APPROVALS | ENGINEER | DATE |
|---|---|---|---|---|---|
| City Engineer | | | Liquid Waste | | |
| A.C.E. Design | | | Traffic | | |
| A.C.E.-Hydrology | | | Water | | |

DRAWING NO. 3338 | MAP NO. D-21 | SHEET M-1 OF M-2

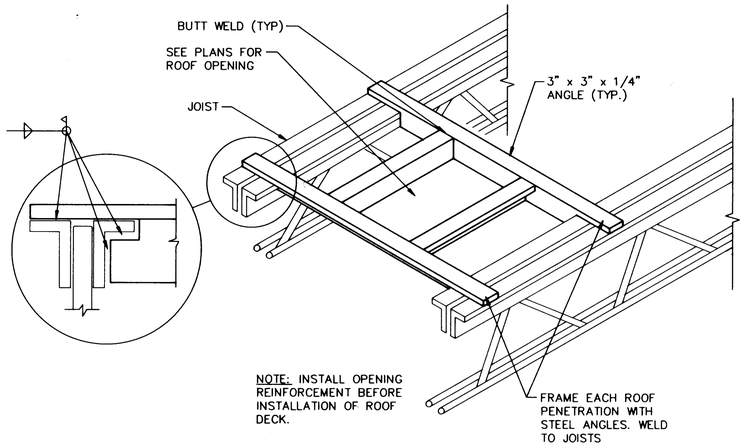


## 1/1|2 ROOF FRAMING DETAIL
SCALE: NONE

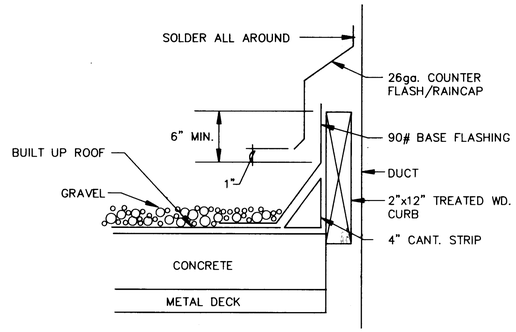


## 2/1|2 DUCT THRU ROOF
SCALE: NONE

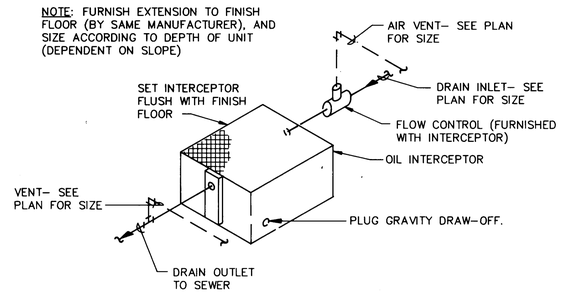


## 3/1|2 OIL INTERCEPTOR INSTALLATION DETAILS
SCALE: NONE

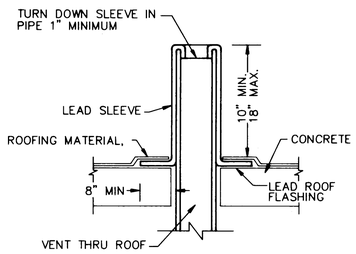


## 4/1|2 VENT THRU ROOF DETAIL
SCALE: NONE

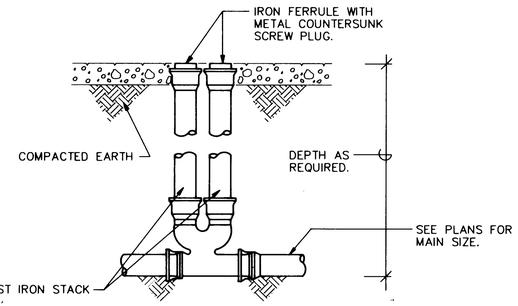


## 5/1|2 CLEANOUT TO GRADE
SCALE: NONE

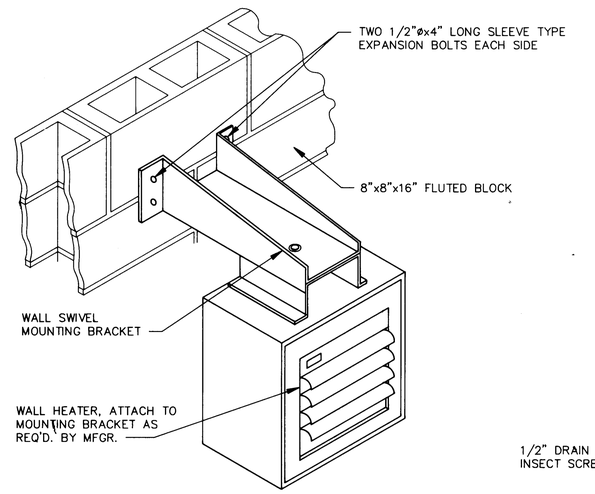


## 6/1|2 WALL HEATER DETAIL
SCALE: NONE

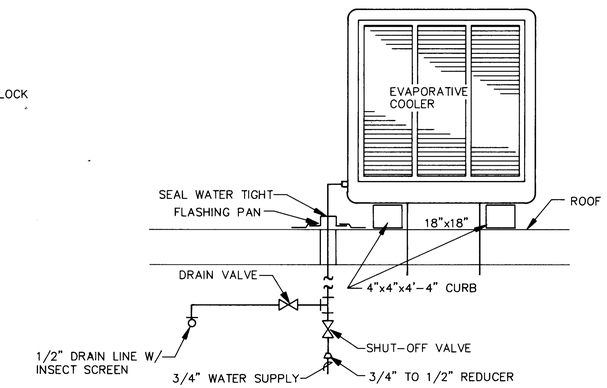


## 7/1|2 EVAPORATIVE COOLER DETAIL
SCALE: NONE

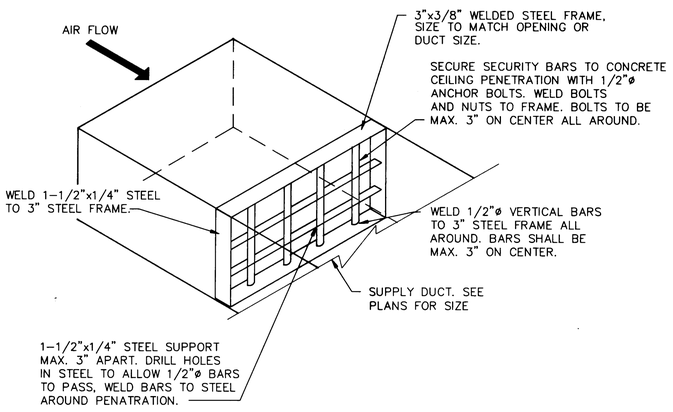


## 8/1|2 SECURITY BAR DETAIL
SCALE: NONE

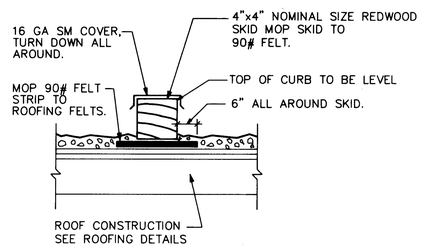


## 9/1|2 CURB SKID DETAIL
SCALE: NONE

RECORD DRAWING
AUG 10 1989
Date
These drawings have been revised based on data and every reasonable attempt has been made to depict construction as performed

AS BUILT INFORMATION

| | |
|---|---|
| CONTRACTOR | |
| WORK STAKED BY | DATE |
| INSPECTOR ACCEPTANCE BY | DATE |
| FIELD VERIFICATION BY | DATE |
| DRAWINGS CORRECTED BY | DATE |

MICRO–FILM INFORMATION

| | |
|---|---|
| RECORDED BY | DATE |
| NO. | |

BENCH MARKS

SURVEY INFORMATION

FIELD NOTES

| NO. | BY | DATE |
|---|---|---|
| | | |

ENGINEER'S SEAL

CHARLOTTE WELTY NEW MEXICO REGISTERED PROFESSIONAL ENGINEER

| NO. | DATE | REMARKS | BY |
|---|---|---|---|
| | | REVISIONS | |

| | | |
|---|---|---|
| DESIGN | | |
| DESIGNED BY | CHARLOTTE WELTY | DATE 9–29–88 |
| DRAWN BY | DIANA CASIAS | DATE 9–29–88 |
| CHECKED BY | RON MALONE | DATE 9–29–88 |

1 2 3 4 5 6 7 8 9 10 11 12
2 6 3 3 3 8 1 7 8 9

8056.11MD1/8056WW2

CITY OF ALBUQUERQUE
MUNICIPAL DEVELOPMENT DEPARTMENT
ENGINEERING DIVISION

TITLE: WALKER NO.2 WELL EQUIPMENT
MECHANICAL DETAILS

| APPROVALS | ENGINEER | DATE | APPROVALS | ENGINEER | DATE |
|---|---|---|---|---|---|
| City Engineer | | | Liquid Waste | | |
| A.C.E. Design | | | Traffic | | |
| A.C.E.–Hydrology | | | Water | | |

| DRAWING NO. | MAP NO. | SHEET |
|---|---|---|
| 3338 | D-21 | M-2 OF M-2 |

## CONTROL SCHEMATICS AND INTERCONNECTION DIAGRAMS

| SYMBOLS | DESCRIPTION |
|---|---|
| | FUSE |
| | CIRCUIT BREAKER |
| | DISCONNECT SWITCH |
| | GROUND CONNECTION |
| | MAINTAINED MUSHROOM HEAD PUSHBUTTON SWITCH |
| | HAO SELECTOR SWITCH |
| | MOMENTARY PUSHBUTTON SWITCH, (NORMALLY OPEN) |
| | MOMENTARY PUSHBUTTOM SWITCH, (NORMALLY CLOSED) |
| | PRESSURE SWITCH |
| | POSITION SWITCH |
| | LIMIT SWITCH |
| | TEMPERATURE SWITCH |
| FT | FLOW TRANSMITTER |
| FE | FLOW ELEMENT |
| LT | LEVEL TRANSMITTER |
| LE | LEVEL ELEMENT |
| XE | VIBRATION ELEMENT |
| JS | POWER CONSUMPTION PULSE METER |
| ETM | ELAPSED TIME METER |
| | RELAY, CONTACTOR, OR TIMER CONTACT (NORMALLY OPEN) |
| | RELAY, CONTACTOR, OR TIMER CONTACT (NORMALLY CLOSED) |
| | TIMED CONTACT (NORMALLY OPEN TIMED CLOSED) |
| | TIMED CONTACT (NORMALLY CLOSED TIMED OPEN) |
| | TIMED CONTACT (NORMALLY OPEN TIMED OPEN) |
| | TIMED CONTACT (NORMALLY CLOSED TIMED CLOSED) |
| OL | OVERLOAD RELAY CONTACT (NORMALLY CLOSED) |
| | MOTOR STARTER OVERLOAD ELEMENT |
| | SOLENOID VALVE COIL |
| | RELAY, CONTACTOR, OR TIMER COIL |
| | RTB TERMINATION |
| | FIELD DEVICE TERMINATION |
| | FIELD DEVICE TERMINATION (FUSED/DISCONNECT TYPE) |
| C006 | CONDUIT CALLOUT (P = POWER CONDUCTOR. C = CONTROL CONDUCTOR.) (SEE POWER AND CONTROL CONDUIT SCHEDULES SHEET E-2.) |
| | CONTROL CABLE DRAIN WIRE |
| | CONTROL WIRE TAG IDENTIFICATION |
| | INDICATOR LAMP (R=RED LENS, G=GREEN LENS, B=BLUE LENS). |
| M | MOTOR |

## ONE-LINE DIAGRAM

| SYMBOLS | DESCRIPTION |
|---|---|
| | FUSE |
| | DISCONNECT SWITCH |
| M | MOTOR |
| | CURRENT TRANSFORMER |
| | POTENTIAL TRANSFORMER |
| A | AMMETER |
| V | VOLTMETER |
| | SURGE ARRESTOR |
| | CAPACITOR |
| | RISER POLE |

## PLANS

| SYMBOLS | DESCRIPTION |
|---|---|
| | OVERHEAD PRIMARY CONDUCTOR |
| P | PRIMARY PULLBOX |
| G | GROUND COUNTERPOISE SYSTEM CONDUCTOR |
| | CONDUIT – ABOVE GROUND |
| | CONDUIT – BELOW GROUND |
| | CONDUIT TURNING UP |
| | CONDUIT TURNING DOWN |
| DP-17 | CONDUIT WITH PANELBOARD BRANCH CIRCUIT NUMBER |
| P006 | CONDUIT CALLOUT (P = POWER CONDUCTOR. C = CONTROL CONDUCTOR.) (SEE POWER AND CONTROL CONDUIT SCHEDULES SHEET E-2.) |
| A | LIGHT FIXTURE, PENDANT MOUNT, FLUORESCENT. (UPPERCASE LETTER INDICATES FIXTURE TYPE.) |
| B | LIGHT FIXTURE, WALL MOUNT. (UPPERCASE LETTER INDICATES FIXTURE TYPE.) |
| D | EMERGENCY LIGHT FIXTURE, WALL MOUNT. (UPPERCASE LETTER INDICATES FIXTURE TYPE.) |
| | DUPLEX RECEPTACLE, FLUSH MOUNT |
| WP | DUPLEX RECEPTACLE, FLUSH MOUNT, WEATHERPROOF COVER |
| | WALL SWITCH, FLUSH MOUNT |
| T | THERMOSTAT |
| | GROUND ROD WITH EXOTHERMIC CONNECTION TO CONDUCTOR |
| | GROUND COUNTERPOISE SYSTEM CONNECTION, MECHANICAL |
| | GROUND COUNTERPOISE SYSTEM CONNECTION, EXOTHERMIC |
| | CONDUIT RISER AND FLEXIBLE CONNECTION TO EQUIPMENT |
| | DISCONNECT SWITCH, TYPE AS NOTED |
| J | JUNCTION BOX (CAST DEVICE BOX) |

## PIPING AND INSTRUMENT DIAGRAM

| SYMBOLS | DESCRIPTION |
|---|---|
| | LOCAL MOUNTED INSTRUMENT |
| | PANEL MOUNTED INSTRUMENT |
| | PANEL MOUNTED INSTRUMENT (BEHIND BOARD) |
| | PROCESS LINE |
| | INSTRUMENT ELECTRICAL LINE (ARROWS INDICATE SIGNAL DIRECTION) |
| 14" 12" | CHANGE IN PIPE SIZE |
| | CHECK VALVE |
| M | BUTTERFLY VALVE (MOTOR OPERATED) |
| | BUTTERFLY VALVE (HAND OPERATED) |
| FE | FLOW ELEMENT |
| FSL | FLOW SWITCH (LOW) |
| FTI | FLOW INDICATING TRANSMITTER |
| HS | HAND SWITCH |
| JS | POWER CONSUMPTION PULSE METER |
| LE | LEVEL ELEMENT |
| LSH | LEVEL SWITCH (HIGH) |
| LTI | LEVEL INDICATING TRANSMITTER |
| PI | PRESSURE INDICATOR |
| PSH | PRESSURE SWITCH (HIGH) |
| TE | TEMPERATURE ELEMENT |
| TSH | TEMPERATURE SWITCH (HIGH) |
| TSHH | TEMPERATURE SWITCH (HIGH/HIGH) |
| TSL | TEMPERATURE SWITCH (LOW) |
| XE | VIBRATION ELEMENT |

## INSTRUMENT LOOP IDENTIFICATION SCHEDULE

| LOOP NUMBER | LOOP DESCRIPTION |
|---|---|
| | **STATION PROCESS** |
| 02 | DISCHARGE LINE |
| 03 | WASH LINE |
| | **STATION HVAC** |
| 80 | HEATING |
| 82 | AIR CONDITIONING |
| | **STATION MISCELLANEOUS** |
| 91 | FLOOD |
| 93 | TEMPERATURE |
| 97 | ELECTRICAL CONSUMPTION |

## ABBREVIATIONS

| ABBREVIATION | DESCRIPTION |
|---|---|
| AFF | ABOVE FINISHED FLOOR |
| AUX | AUXILIARY |
| C | CONDUIT |
| CB | CIRCUIT BREAKER |
| GRD | GROUNDING CONDUCTOR OR GROUND |
| H-A-O | HAND-AUTO-OFF |
| HID | HIGH INTENSITY DISCHARGE |
| MCB | MAIN CIRCUIT BREAKER |
| NIC | NOT IN CONTRACT |
| NC OR N/C | NORMALLY CLOSED |
| NO OR N/O | NORMALLY OPEN |
| OL | MOTOR STARTER OVERLOAD ELEMENT |
| RTB | REMOTE TERMINAL UNIT TERMINAL BOX |
| RTU | REMOTE TERMINAL UNIT |
| RVNR | REDUCED VOLTAGE NON-REVERSING |
| TBOF | TO BOTTOM OF LIGHT FIXTURE |
| WP | WEATHERPROOF |
| XFMR | TRANSFORMER |

## LIGHT FIXTURE SCHEDULE

| TYPE | DESCRIPTION/MANUFACTURER | VOLTAGE | LAMPS | MOUNTING | NOTES |
|---|---|---|---|---|---|
| A | INDUSTRIAL FLUORESCENT BENJAMIN FLB-1125-4U-FL173(2) | 120V | (2) 8 FT. 96 WATT HO FLUORESCENT | PENDANT 8'-6" AFF TBOF | 1 |
| B | H.I.D. AREA LIGHT DEVINE AWP160-50HPS-120V-C43-PC1 | 120V | (1) 50 WATT HIGH PRESSURE SODIUM | SURFACE 10'-0" AFF TBOF | 2 |
| C | INCANDESCENT AREA LIGHT DEVINE AWP160-INC-120V-C43 | 120V | (1) 150 WATT INCANDESCENT | SURFACE 7'-0" AFF TBOF | |
| D | DELETED | | | | |

NOTES:
1 WITH OPTIONAL FACTORY WIRE GUARD
2 WITH INTEGRAL PHOTOCONTROL

## GENERAL NOTES

1 SEE SHEET E-2 FOR CONDUIT SCHEDULES.

2 THE FOLLOWING PRODUCTS SHALL BE FURNISHED BY THE CITY, INSTALLED AND CONNECTED UNDER THE REFERENCED SECTION:

16150 WELL PUMP MOTOR
16321 PADMOUNTED DISTRIBUTION TRANSFORMER
16361 PADMOUNTED PRIMARY FUSED SWITCH
16381 MOTOR SURGE CAPACITOR
16480 MOTOR CONTROL CENTER

3 THE FOLLOWING PRODUCTS SHALL BE FURNISHED BY THE CITY, INSTALLED UNDER THE REFERENCED SECTION, CONNECTED UNDER SECTION 16180:

02641 MOTOR OPERATED VALVES
13315 WELL DISCHARGE LINE FLOW INDICATING TRANSMITTER

4 THE FOLLOWING PRODUCTS SHALL BE FURNISHED AND INSTALLED UNDER THE REFERENCED SECTION, CONNECTED UNDER SECTION 16180:

02441 IRRIGATION CONTROLLER
13315 WELL LEVEL INDICATING (DRAWDOWN) TRANSMITTER
15750 ELECTRIC HEATER
15881 EVAPORATIVE COOLER

5 THE FOLLOWING PRODUCTS SHALL BE FURNISHED UNDER THE REFERENCED SECTION, INSTALLED AND CONNECTED UNDER SECTION 16180:

13315 INSTRUMENTATION (EXCEPT TRANSMITTERS)
13315 REMOTE TERMINAL UNIT TERMINAL BOX (RTB)
13315 INSTRUMENT CABINET
15980 ELECTRIC HEATER THERMOSTAT
15980 EVAPORATIVE COOLER THERMOSTAT

6 THE FOLLOWING PRODUCTS HAVE BEEN SHOWN ON THE DRAWINGS FOR REFERENCE ONLY AND ARE NOT A PART OF THIS CONTRACT:

REMOTE TERMINAL UNIT (RTU)
RADIO
RADIO ANTENNA

7 PUBLIC SERVICE COMPANY OF NEW MEXICO REPRESENATIVE FOR THIS PROJECT:
JIM VANN
ALVARADO SQUARE/MS-0270
ALBUQUERQUE, NEW MEXICO 87518
(505) 761-3426

AS BUILT INFORMATION
CONTRACTOR
WORK STARTED BY DATE
ACCEPTANCE INSPECTION BY DATE
FIELD VERIFICATION BY DATE
DRAWINGS CORRECTED BY DATE
MICRO-FILM INFORMATION
RECORDED BY DATE
NO.

BENCH MARKS

SURVEY INFORMATION
FIELD NOTES
NO. BY DATE

ENGINEER'S SEAL
DAVID A. DOZIER NEW MEXICO 998 REGISTERED PROFESSIONAL ENGINEER

| NO. | DATE | REMARKS | BY |
|---|---|---|---|
| 1 | 2/13/89 | FIELD REV. NO. 1 | LH |

REVISIONS

DESIGN
DESIGNED BY D. DOZIER DATE 9-29-88
DRAWN BY P. SCHMITTLE DATE 9-29-88
CHECKED BY J. KEALY DATE 9-29-88

1 2 3 4 5 6 7 8 9 10 11 12
2 6 3 3 3 8 1 8 8 9

805611ED2/8056LEG

RECORD DRAWING
AUG 11 1989
Date
These drawings have been revised based on field data and every reasonable attempt has been made to depict construction as actually performed

CITY OF ALBUQUERQUE
MUNICIPAL DEVELOPMENT DEPARTMENT
ENGINEERING DIVISION

TITLE: WALKER NO.2 WELL EQUIPMENT
ELECTRICAL LEGEND

| APPROVALS | ENGINEER | DATE | APPROVALS | ENGINEER | DATE |
|---|---|---|---|---|---|
| City Engineer | | | Liquid Waste | | |
| A.C.E. Design | | | Traffic | | |
| A.C.E.-Hydrology | | | Water | | |

DRAWING NO. 3338 | MAP NO. | SHEET E-1 OF E-9

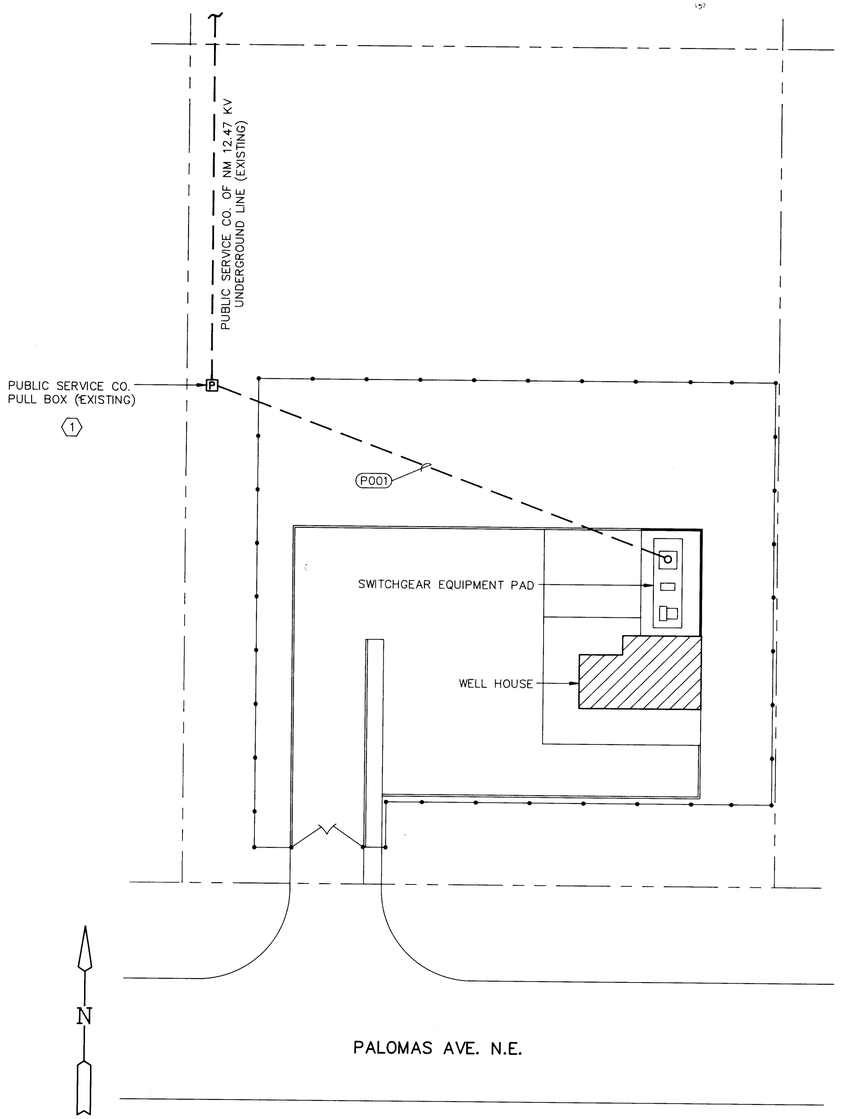


1/2 ELECTRICAL SITE PLAN
SCALE 1"=20'-0"

## GENERAL NOTES

1. SEE SHEET E-1 FOR SYMBOLS LEGEND.
2. SEE SHEET E-2 FOR CONDUIT SCHEDULES.

## KEYED NOTES⬡

1 INSTALL CONDUIT FROM PUBLIC SERVICE CO. PULL BOX TO PRIMARY METERING ENCLOSURE ON SWITCHGEAR EQUIPMENT PAD. SEE ENLARGED ELECTRICAL PLAN ON SHEET E-3.

## CONDUIT SCHEDULE — CONTROL CONDUIT/CONDUCTOR

| CONDUIT NO. | CONDUIT SIZE | CONDUCTOR SIZE | FROM | TO |
|---|---|---|---|---|
| C-001 | 3/4"C | 2#14, 1#14 GRD | UTILITY METERING ENCLOSURE (KYZ) | "RTB-006" (VIA CONTROL WIREWAY) |
| C-002 | 3/4"C | (1) 1-PAIR #16 BELDEN #8719, 12#14, 1#14 GRD. 5/1 | MOTOR CONTROL CENTER | "RTB-006" (VIA CONTROL WIREWAY) |
| C-003 | 3/4"C | 10#14, 1#14 GRD | DISCHARGE LINE VALVE OPERATOR | "RTB-006" (VIA CONTROL WIREWAY) |
| C-004 | 3/4"C | 10#14, 1#14 GRD | WASH LINE VALVE OPERATOR | "RTB-006" (VIA CONTROL WIREWAY) |
| C-005 | 3/4"C | 2#14, 1#14 GRD | DISCHARGE LINE PRESSURE SWITCH | "RTB-006" (VIA CONTROL WIREWAY) |
| C-006 | 3/4"C | 4#14, 1#14 GRD | EQUIPMENT ROOM TEMPERATURE SWITCHES | "RTB-006" (VIA CONTROL WIREWAY) |
| C-007 | 1"C | (1) FACTORY SUPPLIED CABLE, 1#6 GRD | WELL LEVEL ELEMENT | INSTRUMENT CABINET (VIA CONTROL WIREWAY) |
| C-008 | 3/4"C | 2#14, 1#14 GRD | WELL WASH LINE FLOW ELEMENT | INSTRUMENT CABINET (VIA CONTROL WIREWAY) |
| C-009 | 3/4"C | 2#14, 1#14 GRD | WELL DISCHARGE LINE FLOW ELEMENT | INSTRUMENT CABINET (VIA CONTROL WIREWAY) |
| C-010 | 1"C | (1) FACTORY SUPPLIED CABLE " | WELL DISCHARGE LINE FLOW ELEMENT | INSTRUMENT CABINET (VIA CONTROL WIREWAY) |
| C-011 | 3/4"C | 2#14, 1#14 GRD | EMERGENCY STOP PUSHBUTTON | MOTOR CONTROL CENTER |
| C-012 | 3/4"C | 2#14, 1#14 GRD | OIL DRIPPER SOLENOID VALVE | MOTOR CONTROL CENTER |
| C-013 | 3/4"C | 2#14, 1#14 GRD | ELECTRIC HEATER THERMOSTAT | ELECTRIC HEATER |
| C-014 | 2"C | (2) 1-PAIR #16 BELDEN #8719 46#14, 1#14 GRD | "RTB-006" | CONTROL WIREWAY |
| C-015 | (3) 1/2"C | (1) FACTORY SUPPLIED CABLE (1)1-PAIR #16 BELDEN #8719, 2#12, 1#12 GRD | WELL DISCHARGE LINE FLOW TRANSMITTER | CONTROL WIREWAY |
| C-016 | (3) 1/2"C | (1) FACTORY SUPPLIED CABLE (1)1-PAIR #16 BELDEN #8719, 2#12, 1#12 GRD | WELL LEVEL TRANSMITTER | CONTROL WIREWAY |
| C-017 | 2"C | 12#14, 6#12, 1#12 GRD | INSTRUMENT CABINET | CONTROL WIREWAY |
| C-018 | 1-1/4"C | (8)3#18 BELDEN #8770, (1)1-PAIR #16 BELDEN #8719 1#14 GRD 2/1 | MOTOR TERMINATION BOX | MOTOR CONTROL CENTER |
| C-019 | 3/4"C | 4#14, 1#14 GRD. | EVAPORATIVE COOLER THERMOSTAT | EVAPORATIVE COOLER CONTROLLER |
| C-020 | 1"C | UNDER SECTION 02441 | IRRIGATION CONTROLLER | 6'-0" BEYOND BUILDING |

## CONDUIT SCHEDULE — POWER CONDUIT/CONDUCTOR

| CONDUIT NO. | CONDUIT SIZE | FEEDER SIZE | FROM | TO |
|---|---|---|---|---|
| P-001 | 4"C | NOT IN CONTRACT | PNM PULL BOX | PRIMARY METERING ENCLOSURE |
| P-002 | 4"C | 3#1/0, 15KV, 1#8 GRD | PRIMARY METERING ENCLOSURE | PRIMARY FUSED SWITCH |
| P-003 | 4"C | 3#1/0, 15KV, 1#8 GRD | PRIMARY FUSED SWITCH | TRANSFORMER "XFMR/P-006" |
| P-004 | 4"C | 3#1/0, 15KV, 1#8 GRD | TRANSFORMER "XFMR/P-006" | MOTOR CONTROL CENTER |
| P-005 | 3"C | 3#1/0, 5KV, 1#8 GRD | MOTOR CONTROL CENTER | MOTOR SURGE CAPACITOR |
| P-006 | 3"C | 3#1/0, 5KV, 1#8 GRD | MOTOR SURGE CAPACITOR | WELL MOTOR |
| P-007 | 3"C | 3#6, 5KV, 1#8 GRD | MOTOR CONTROL CENTER | TRANSFORMER "XFMR/D-006" |
| P-008 | 1-1/2"C | 4#2, 1#2 GRD | TRANSFORMER "XFMR/D-006" | PANEL "DP-006" |
| P-009 | 3/4"C | 4#12, 1#12 GRD | PANEL "DP-006-16" | WASH LINE VALVE OPERATOR |
| P-010 | 1"C | 3#8, 1#10 GRD | PANEL "DP-006-4" | ELECTRIC HEATER DISCONNECT SWITCH |
| P-011 | 3/4"C | 4#12, 1#12 GRD | PANEL "DP-006-10" | DISCHARGE LINE VALVE OPERATOR |
| P-012 | 3/4"C | NOT IN CONTRACT | PANEL "DP-006-13" | RADIO |
| P-013 | 3/4"C | 2#12, 1#12 GRD | PANEL "DP-006-15" | INSTRUMENT CABINET (VIA CONTROL WIREWAY) |
| P-014 | 3/4"C | NOT IN CONTRACT | PANEL "DP-006-11" | "RTU-006" |
| P-015 | 3/4"C | 2#12 1#12 GRD | PANEL "DP-006-17" | EVAPORATIVE COOLER CONTROLLER |
| P-016 | 1"C | 3#8 1#10 GRD | ELECTRIC HEATER DISCONNECT SWITCH | ELECTRIC HEATER |
| P-017 | 3/4"C | 4#12 1#12 GRD | EVAPORATIVE COOLER CONTROLLER | EVAPORATIVE COOLER |
| P-018 | 3/4"C | 2#12, 1#12 GRD | PANEL "DP-006-19" | IRRIGATION CONTROLLER |

## PANEL "DP-006"

120/208V, 3ø, 4 WIRE, 100A FRAME, 100A M.C.B., 27 CKT., SURFACE MOUNT, BOTTOM FEED, NEMA 1 ENCLOSURE, FRONT HINGED TO BOX.

| CKT | BKR. RTNG. | LOAD DESCRIPTION | AMPERAGE LOAD ØA | ØB | ØC | LOAD DESCRIPTION | BKR. RTNG. | CKT |
|---|---|---|---|---|---|---|---|---|
| 1 | 20A/1P #12 | LIGHTS (EQUIPMENT ROOM) | 6.3 28.0 | | | ELECTRIC HEATER | 40A/3P #8 | 4 |
| 3 | 20A/1P #12 | LIGHTS (PUMP ENCLOSURE ROOM) | | 0.5 28.0 | | | | |
| 5 | 20A/1P #12 | LIGHTS (EXTERIOR) | | | 0.5 28.0 | | | |
| 7 | 20A/1P #12(GFI) | RECEPTACLES | 4.5 1.7 | | | DISCHARGE LINE VALVE OPERATOR | 20A/3P #12 | 10 |
| 9 | 20A/1P #12(GFI) | RECEPTACLES | | 3.0 1.7 | | | | |
| 11 | 20A/1P — | "RTB-006" | | | 2.0 1.7 | | | |
| 13 | 20A/1P — | RADIO | 2.0 1.7 | | | WASH LINE VALVE OPERATOR | 20A/3P #12 | 16 |
| 15 | 20A/1P #12 | INSTRUMENT CABINET, FLOW TRANSMITTER WELL LEVEL TRANSMITTER | | 2.0 1.7 | | | | |
| 17 | 20A/1P #12 | EVAPORATIVE COOLER | | | 11.3 1.7 | | | |
| 19 | 15A/1P #12 | IRRIGATION CONTROLLER | 1.0 — | | | 4/1 SPARE | 20A/3P — | 22 |
| 21 | 20A/1P — | SPARE | | — — | | | | |
| 23 | 20A/1P — | SPARE | | | — — | | | |
| 25 | 20A/1P — | SPARE | — — | | | PANELBOARD MAIN CIRCUIT BREAKER | 100A/3P — | |
| 27 | 15A/1P — | 3/1 SPARE | | — — | | | | |
| 29 | 20A/1P — | SPARE | | | — — | | | |

(GFI)= GROUND FAULT INTERUPTER CIRCUIT BREAKER

RECORD DRAWING
Date AUG 10 1989
These drawings have been revised based on field data and every reasonable attempt has been made to depict construction as actually performed

8 2 3 4 5 6 7 8 9 10 11 12
2 6 3 3 3 8 1 9 8 9

8056111ED2/8056SITE

AS BUILT INFORMATION
CONTRACTOR
WORK STAKED BY
INSPECTOR'S ACCEPTANCE BY
FIELD VERIFICATION BY
DRAWINGS CORRECTED BY
MICRO-FILM INFORMATION
RECORDED BY
NO. DATE

BENCH MARKS

SURVEY INFORMATION
FIELD NOTES
NO. BY DATE

ENGINEER'S SEAL
DAVID A. DOZIER NEW MEXICO 9985 REGISTERED PROFESSIONAL ENGINEER

| NO. | DATE | REMARKS | BY |
|---|---|---|---|
| 5/1 | 2/13/88 | FIELD REV. NO. 1 | LH |

REVISIONS

DESIGN
DESIGNED BY D. DOZIER DATE 9-29-88
DRAWN BY P. SCHMITTLE DATE 9-29-88
CHECKED BY J. KEALY DATE 9-29-88

CITY OF ALBUQUERQUE
MUNICIPAL DEVELOPMENT DEPARTMENT
ENGINEERING DIVISION

TITLE: WALKER NO.2 WELL EQUIPMENT
ELECTRICAL SITE PLAN
CONDUIT SCHEDULES & PANELBOARD SCHEDULE

| APPROVALS | ENGINEER | DATE | APPROVALS | ENGINEER | DATE |
|---|---|---|---|---|---|
| City Engineer | | | Liquid Waste | | |
| A.C.E. Design | | | Traffic | | |
| A.C.E.-Hydrology | | | Water | | |

DRAWING NO. 3338 MAP NO. SHEET E-2 OF E-9

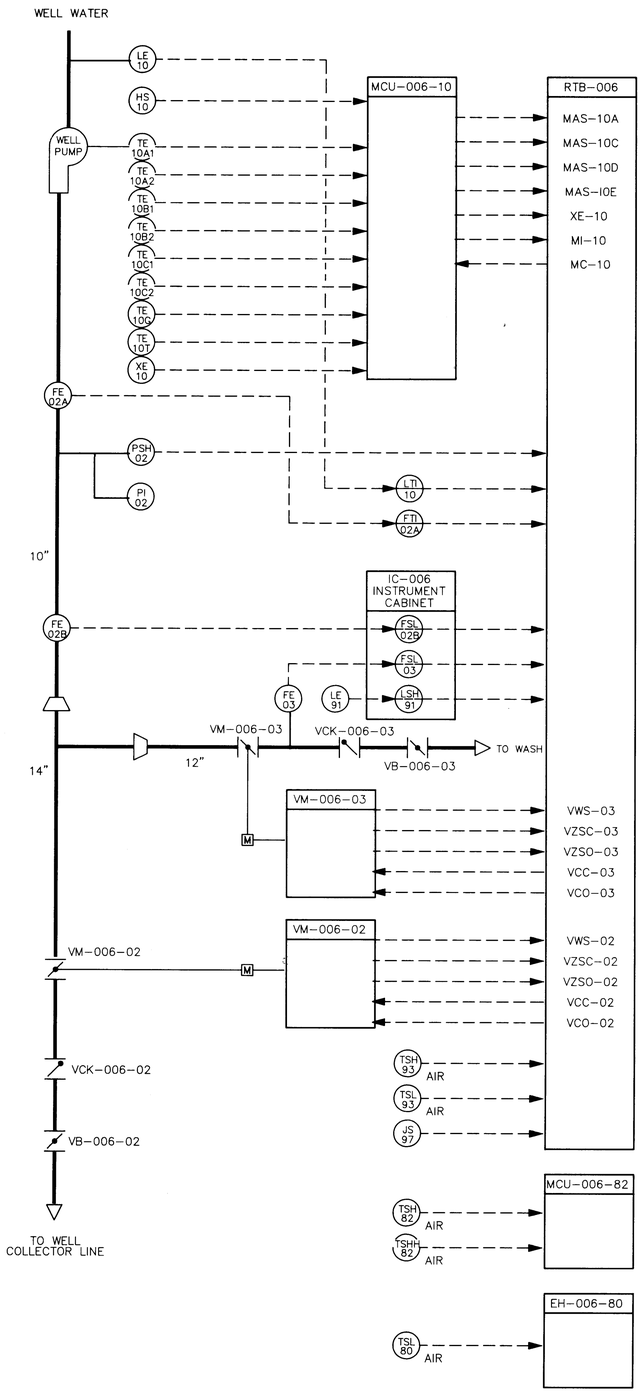


1 / 3 3 PIPING AND INSTRUMENT DIAGRAM
NO SCALE

## GENERAL NOTES

1 SEE SHEET E-1 FOR SYMBOLS LEGEND.

2 SEE SHEET E-2 FOR CONDUIT SCHEDULES.

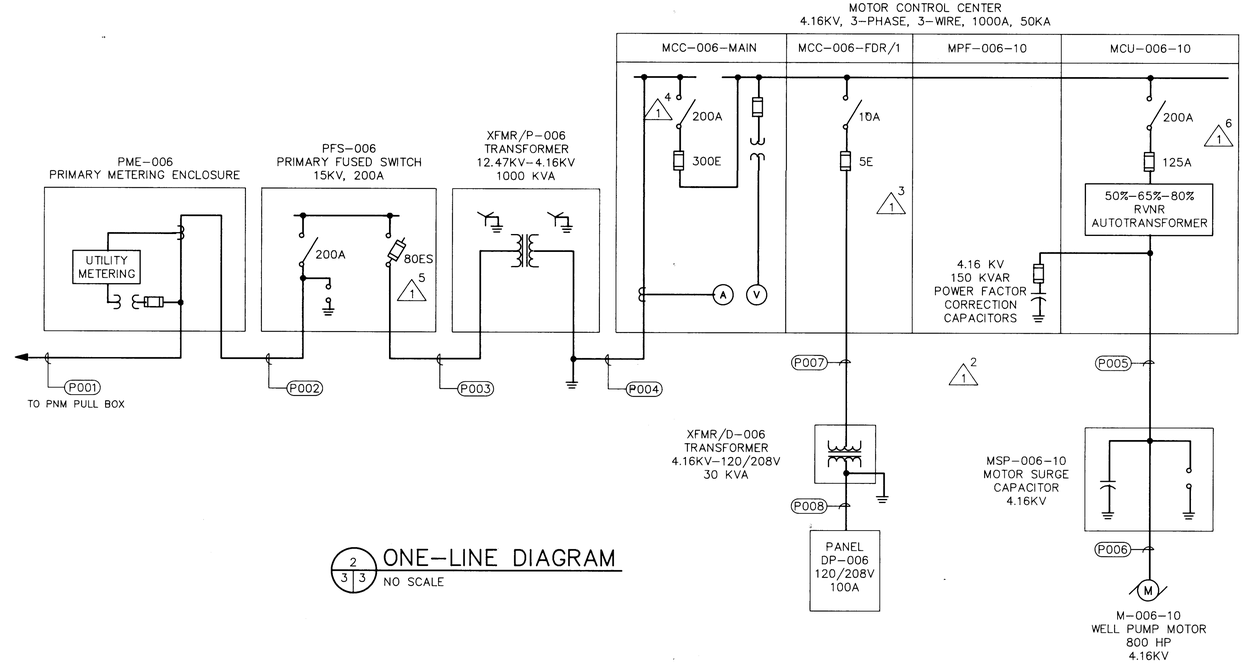


2 / 3 3 ONE-LINE DIAGRAM
NO SCALE

RECORD DRAWING
AUG 10 1989
Date_____
These drawings have been revised based on field data and every reasonable attempt has been made to depict construction as actually performed

| NO. | DATE | REMARKS | BY |
|---|---|---|---|
| 1 | 2/13/89 | FIELD REV. NO. 1 | LH |

REVISIONS

DESIGNED BY D. DOZIER DATE 9-29-88
DRAWN BY T. LAKE DATE 9-29-88
CHECKED BY J. KEALY DATE 9-29-88

AS BUILT INFORMATION
CONTRACTOR
WORK STAKED BY DATE
INSPECTOR'S ACCEPTANCE BY DATE
VERIFICATION BY DATE
DRAWINGS CORRECTED BY DATE
MICRO-FILM INFORMATION
RECORDED BY DATE
NO.

BENCH MARKS

SURVEY INFORMATION
FIELD NOTES
NO. BY DATE

ENGINEER'S SEAL
DAVID A. DOZIER NEW MEXICO (9985) PROFESSIONAL ENGINEER REGISTERED

1 2 3 4 5 6 7 8 9 10 11 12
2 6 3 3 3 8 2 0 8 9

805611ED2/8056E5

CITY OF ALBUQUERQUE
MUNICIPAL DEVELOPMENT DEPARTMENT
ENGINEERING DIVISION

TITLE: WALKER NO.2 WELL EQUIPMENT
ONE-LINE DIAGRAM
PIPING AND INSTRUMENT DIAGRAM

| APPROVALS | ENGINEER | DATE | APPROVALS | ENGINEER | DATE |
|---|---|---|---|---|---|
| City Engineer | | | Liquid Waste | | |
| A.C.E. Design | | | Traffic | | |
| A.C.E.-Hydrology | | | Water | | |
| | | | | | |

DRAWING NO. 3338 MAP NO. SHEET E-3 OF E-9

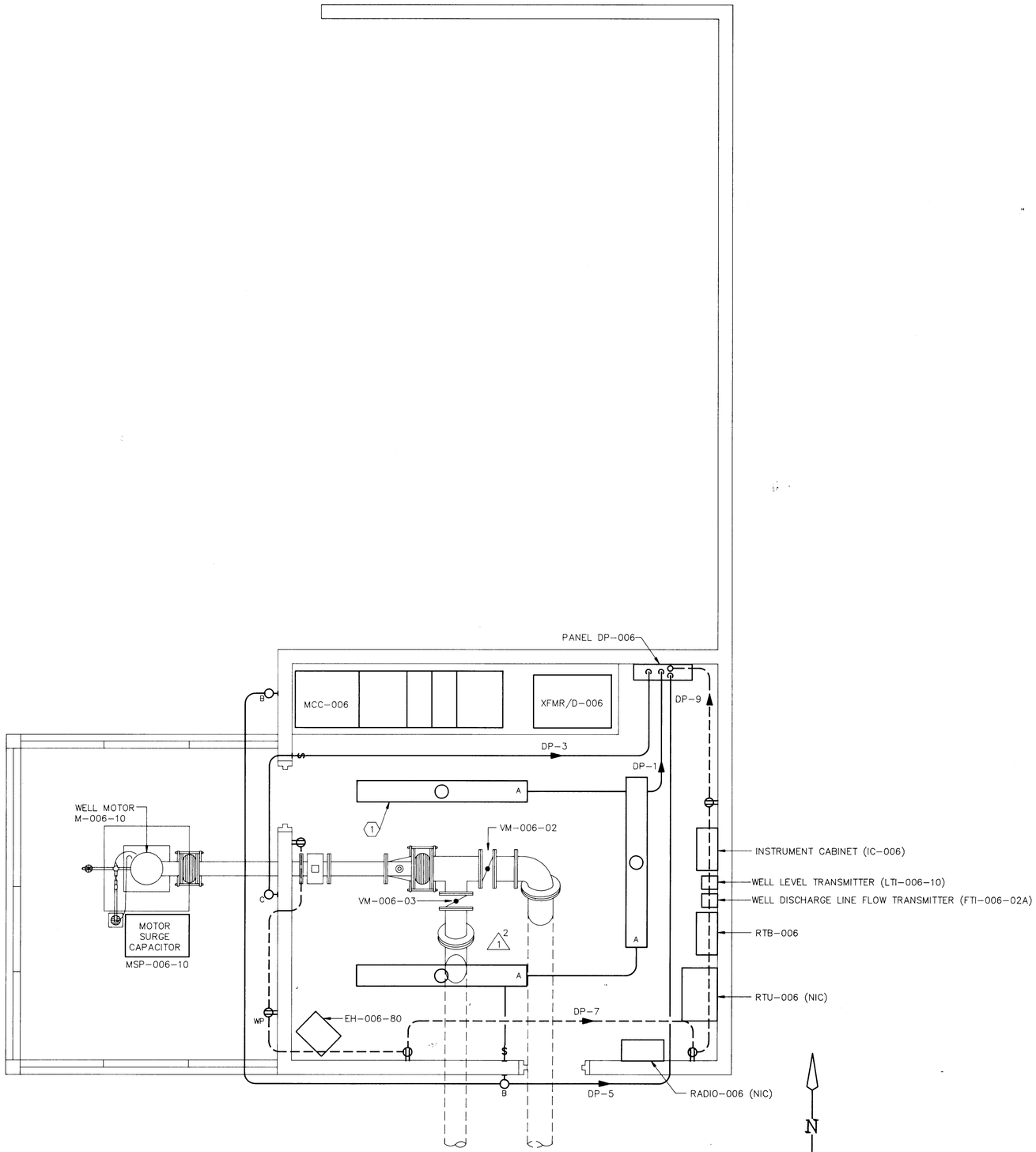


1/4 4 LIGHTING AND RECEPTACLE PLAN
SCALE: 3/8"=1'-0"

## GENERAL NOTES

1. SEE SHEET E-1 FOR SYMBOLS LEGEND.
2. INSTALL LIGHTING AND RECEPTACLE CIRCUIT CONDUIT CONCEALED WITHIN THE CMU BLOCK WALL, EXCEPT AT PANELBOARD "DP-006", WHERE THE CONDUIT SHALL BE SURFACE MOUNTED.
3. USE FLUSH MOUNTED OUTLET BOXES FOR THE INSTALLATION OF RECEPTACLES, WALL SWITCHES, AND WALL MOUNTED LIGHT FIXTURES. ATTACH TO CONDUIT CONCEALED WITHIN THE CMU BLOCK WALL.
4. COORDINATE EXACT LOCATION OF PENDANT MOUNTED FLUORESCENT LIGHT FIXTURES TO AVOID CONFLICTS WITH MECHANICAL DUCTWORK AND EQUIPMENT.
5. PROVIDE NUMBER OF PHASE AND NEUTRAL CONDUCTORS REQUIRED TO IMPLEMENT LIGHTING AND RECEPTACLE CIRCUITING SHOWN ON PLAN.

## KEYED NOTES ⬡

1 PENDANT MOUNT FLUORESCENT LIGHT FIXTURES USING ONE RGS CONDUIT AT EACH END OF FIXTURE. ATTACH PENDANT CONDUIT TO BRANCH CIRCUIT CONDUIT USING FLEXIBLE FIXTURE HANGER CONDULET BOX COVER ON ONE CONDUIT AND CONDUIT EYE HOOK ON OTHER CONDUIT. TYPICAL OF THREE FIXTURES.

RECORD DRAWING
Date AUG 10 1989
These drawings have been revised based on field data and every reasonable attempt has been made to depict construction as actually performed

AS BUILT INFORMATION
CONTRACTOR
WORK STAKED BY — DATE
INSPECTOR'S ACCEPTANCE BY — DATE
FIELD VERIFICATION BY — DATE
DRAWINGS CORRECTED BY — DATE
MICRO-FILM INFORMATION
RECORDED BY — DATE
NO.

BENCH MARKS

SURVEY INFORMATION
FIELD NOTES

| NO. | BY | DATE |
|---|---|---|
| | | |

ENGINEER'S SEAL
DAVID A. DOZIER NEW MEXICO 9985 REGISTERED PROFESSIONAL ENGINEER

| NO. | DATE | REMARKS | BY |
|---|---|---|---|
| 2 | 2/13/89 | FIELD REV. NO. 1 | LH |

REVISIONS

| | | |
|---|---|---|
| DESIGN | | |
| DESIGNED BY | D. DOZIER | DATE 9-29-88 |
| DRAWN BY | P. SCHMITTLE | DATE 9-29-88 |
| CHECKED BY | J. KEALY | DATE 9-29-88 |

2 6 3 3 3 8 2 1 8 9
805611ED1, 8056LGT

CITY OF ALBUQUERQUE
MUNICIPAL DEVELOPMENT DEPARTMENT
ENGINEERING DIVISION

TITLE: WALKER NO.2 WELL EQUIPMENT
LIGHTING AND RECEPTACLE PLAN

| APPROVALS | ENGINEER | DATE | APPROVALS | ENGINEER | DATE |
|---|---|---|---|---|---|
| City Engineer | | | Liquid Waste | | |
| A.C.E. Design | | | Traffic | | |
| A.C.E.-Hydrology | | | Water | | |

DRAWING NO. 3338 | MAP NO. | SHEET E-4 OF E-9

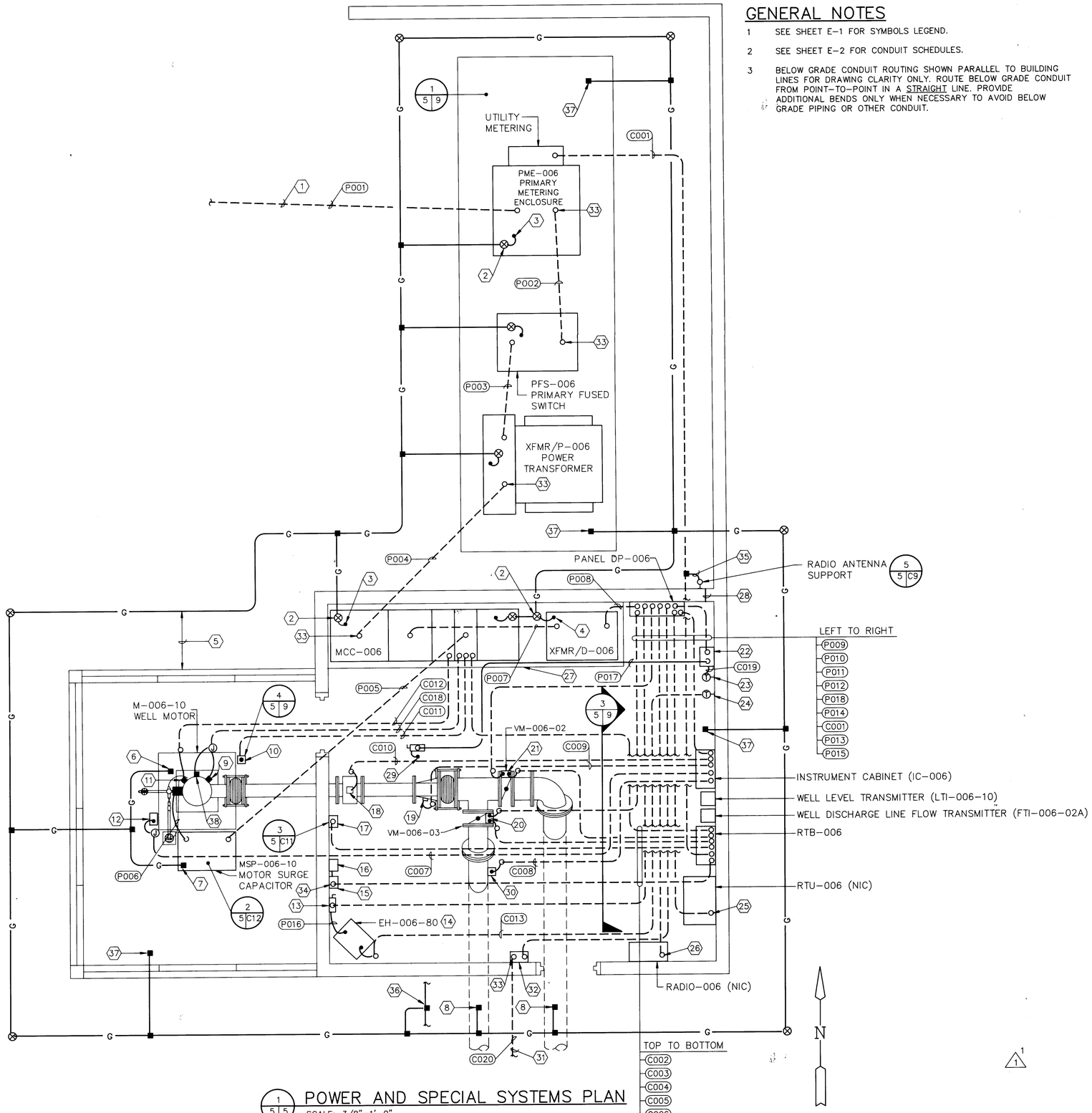


1 5 5 POWER AND SPECIAL SYSTEMS PLAN
SCALE: 3/8"=1'-0"

## GENERAL NOTES

1. SEE SHEET E-1 FOR SYMBOLS LEGEND.
2. SEE SHEET E-2 FOR CONDUIT SCHEDULES.
3. BELOW GRADE CONDUIT ROUTING SHOWN PARALLEL TO BUILDING LINES FOR DRAWING CLARITY ONLY. ROUTE BELOW GRADE CONDUIT FROM POINT-TO-POINT IN A STRAIGHT LINE. PROVIDE ADDITIONAL BENDS ONLY WHEN NECESSARY TO AVOID BELOW GRADE PIPING OR OTHER CONDUIT.

## KEYED NOTES

1. FOR CONTINUATION SEE ELECTRICAL SITE PLAN, SHEET E-2.
2. INSTALL GROUND ROD 4 INCHES ABOVE FINISHED SLAB. (TYPICAL).
3. BOND GROUND ROD TO EQUIPMENT ENCLOSURE AND GROUND BUS. (TYPICAL)
4. BOND GROUND ROD TO TRANSFORMER CASE AND SECONDARY NEUTRAL.
5. LOCATE MINIMUM 2'-0" DISTANCE FROM BUILDING. (TYPICAL)
6. BOND GROUND COUNTERPOISE SYSTEM TO WELL CASING.
7. BOND GROUND COUNTERPOISE SYSTEM TO SURGE CAPACITOR CASE.
8. BOND GROUND COUNTERPOISE SYSTEM TO WELL WASH AND DISCHARGE LINES.
9. WELL PUMP MOTOR R.T.D. TERMINAL BOX.
10. WELL PUMP MOTOR EMERGENCY STOP PUSHBUTTON (HS-006-10).
11. WELL PUMP MOTOR OIL DRIP SOLENOID VALVE (VS-006-10).
12. WELL LEVEL ELEMENT (DRAWDOWN) (LE-006-10).
13. 60A, 3-PHASE, 3-POLE, NON-FUSED. INSTALL ADJACENT TO UNIT.
14. ELECTRIC HEATER (EH-006-80).
15. EQUIPMENT ROOM TEMPERATURE SWITCH (LOW) (TSL-006-93).
16. EQUIPMENT ROOM TEMPERATURE SWITCH (HIGH) (TSH-006-93)
17. WELL DISCHARGE LINE PRESSURE SWITCH (HIGH) (PSH-006-02)
18. WELL DISCHARGE LINE FLOW ELEMENT (FE-006-02A).
19. WELL DISCHARGE LINE FLOW ELEMENT (FE-006-02B).
20. WASH LINE MOTOR OPERATED VALVE (VM-006-03) SEE CONTROL DIAGRAM ON SHEET E-6.
21. DISCHARGE LINE MOTOR OPERATED VALVE (VM-006-02) SEE CONTROL DIAGRAM ON SHEET E-6.
22. EVAPORATIVE COOLER CONTROLLER (MCU-006-82) CONSISTING OF A CONTROL TRANSFORMER AND TWO GENERAL PURPOSE POWER RELAYS IN A NEMA TYPE 1 ENCLOSURE. SEE CONTROL DIAGRAM AND EQUIPMENT DESCRIPTIONS ON SHEET E-6.
23. EVAPORATIVE COOLER THERMOSTAT (TSH-006-82/TSHH-006-82) SEE CONTROL DIAGRAM ON SHEET E-6.
24. ELECTRIC HEATER THERMOSTAT (TSL-006-80) SEE CONTROL DIAGRAM ON SHEET E-6.
25. STUB-UP CONDUIT IN LOCATION SHOWN. CONNECTION TO "RTU" NOT IN CONTRACT.
26. STUB-UP CONDUIT IN LOCATION SHOWN. CONNECTION TO RADIO NOT IN CONTRACT.
27. 4" RAISED EQUIPMENT SLAB.
28. 1"C SLEEVE 7'-0" ABOVE FINISHED FLOOR.
29. TO EVAPORATIVE COOLER DISCONNECT SWITCH LOCATED ON ROOF. SEE SHEET E-6 FOR DESCRIPTION OF COOLER DISCONNECT SWITCH.
30. WELL WASH LINE FLOW ELEMENT (FE-006-03).
31. STUB-OUT 6'-0" BEYOND EDGE OF BUILDING.
32. IRRIGATION CONTROLLER. SEE ELEVATION DETAIL ON SHEET L-3.
33. SEAL CONDUIT OPENING AFTER CONDUCTOR INSTALLATION. TYPICAL FOR ALL PADMOUNTED EQUIPMENT AND ELSEWHERE AS NOTED.
34. STUB-UP CONDUIT TO AVOID RETURN AIR GRILL. SEE SHEET M-1 FOR GRILL LOCATION.
35. BOND RADIO ANTENNA TO GROUND COUNTERPOISE SYSTEM IN ACCORDANCE WITH NEC 810. ROUTE BONDING CONDUCTOR CONCEALED IN CMU WALL. PROVIDE PVC SLEEVE WHERE CONDUCTOR PENETRATES CMU BLOCK WALL. SEAL SLEEVE OPENING AFTER INSTALLATION OF BONDING CONDUCTOR.
36. BOND GROUND COUNTERPOISE SYSTEM TO COLD WATER PIPE.
37. BOND TO SLAB REBAR.
38. WELL PUMP MOTOR VIBRATION ELEMENT (XE-006-10).

AS BUILT INFORMATION
CONTRACTOR — DATE
SURVEYED STAKED BY — DATE
INSPECTOR'S ACCEPTANCE BY — DATE
FIELD VERIFICATION BY — DATE
DRAWINGS CORRECTED BY — DATE
MICRO-FILM INFORMATION
RECORDED BY — DATE
NO.

BENCH MARKS

SURVEY INFORMATION
FIELD NOTES
NO. | BY | DATE

ENGINEER'S SEAL
DAVID A. DOZIER NEW MEXICO 9985 REGISTERED PROFESSIONAL ENGINEER

| NO. | DATE | REMARKS | BY |
|---|---|---|---|
| 1 | 2/13/89 | FIELD REV. NO. 1 | LH |

REVISIONS

DESIGN
DESIGNED BY D. DOZIER DATE 9-29-88
DRAWN BY P. SCHMITTLE DATE 9-29-88
CHECKED BY J. KEALY DATE 9-29-88

2 6 3 3 3 8 2 2 8 9
805611ED1/8056GND

RECORD DRAWING
AUG 10 1989
Date
These drawings have been revised based on field data and every reasonable attempt has been made to depict construction as actually performed

CITY OF ALBUQUERQUE
MUNICIPAL DEVELOPMENT DEPARTMENT
ENGINEERING DIVISION

TITLE: WALKER NO.2 WELL EQUIPMENT
POWER AND SPECIAL SYSTEMS PLAN

| APPROVALS | ENGINEER | DATE | APPROVALS | ENGINEER | DATE |
|---|---|---|---|---|---|
| City Engineer | | | Liquid Waste | | |
| A.C.E. Design | | | Traffic | | |
| A.C.E.-Hydrology | | | Water | | |

DRAWING NO. 3338 | MAP NO. | SHEET E-5 OF E-9

## GENERAL NOTES

1. SEE SHEET E-1 FOR SYMBOLS LEGEND.

## KEYED NOTES

1. GENERAL PURPOSE POWER RELAY, 2 N/O AND 2 N/C CONTACTS, 300V, 30A, 120V COIL IN NEMA TYPE 1 ENCLOSURE. SQUARE D CLASS 8501 TYPE CO-16. PROVIDE COMMON ENCLOSURE FOR BOTH HIGH AND LOW SPEED AUXILIARY RELAYS AND CONTROL TRANSFORMER PER NOTE 6.
2. TWO-STAGE EVAPORATIVE COOLER THERMOSTAT.
3. EVAPORATIVE COOLER FUSED DISCONNECT SWITCH CONSISTING OF (1) DPST FUSED SWITCH AND (1) SPST NON-FUSED SWITCH, 300V, 30A, IN NEMA TYPE 3R ENCLOSURE. MIDWEST MODEL U220H.
4. EVAPORATIVE COOLER.
5. SINGLE-STAGE ELECTRIC HEATER THERMOSTAT. INSTALLED AND CONNECTED UNDER DIVISION 16.
6. 120V/24VAC, 40VA, CLASS 2 CONTROL TRANSFORMER WITH INTEGRAL PRIMARY FUSE PROTECTION.

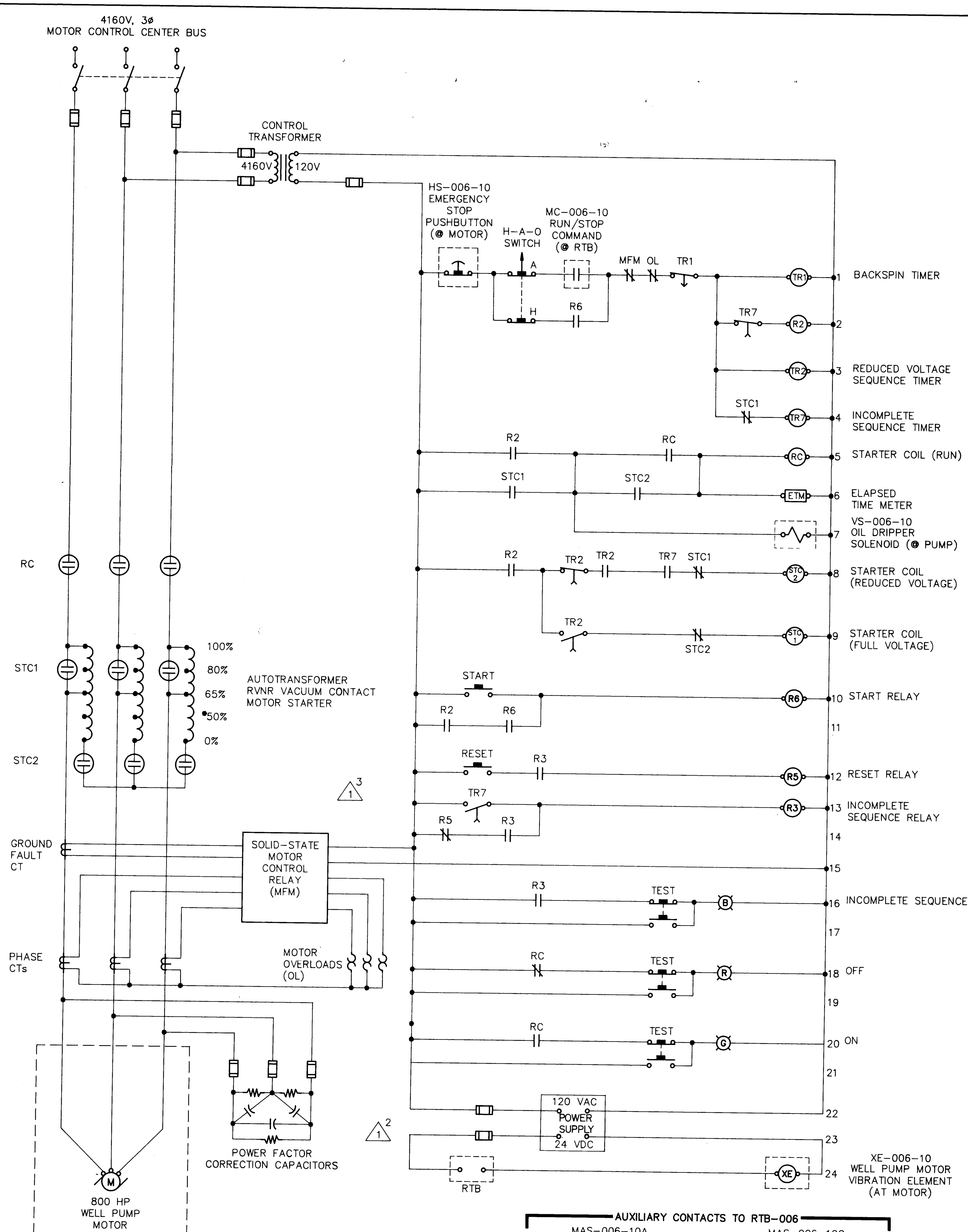


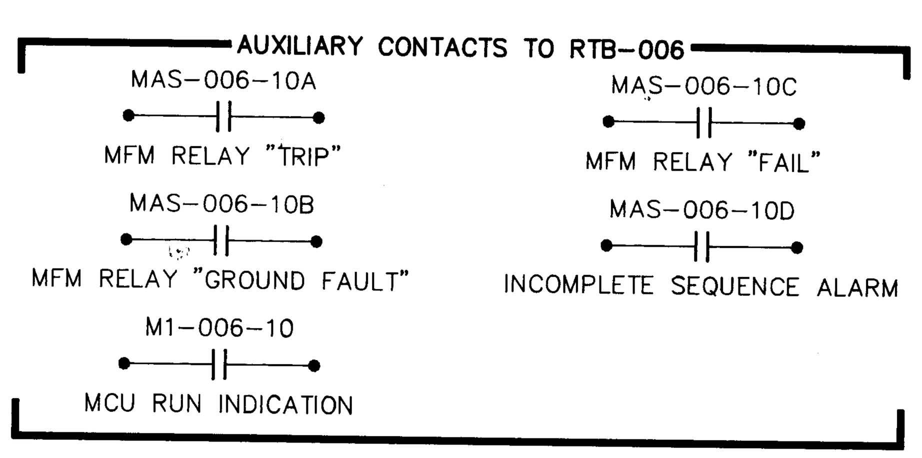


1/6 WELL PUMP MOTOR CONTROL SCHEMATIC

NO SCALE

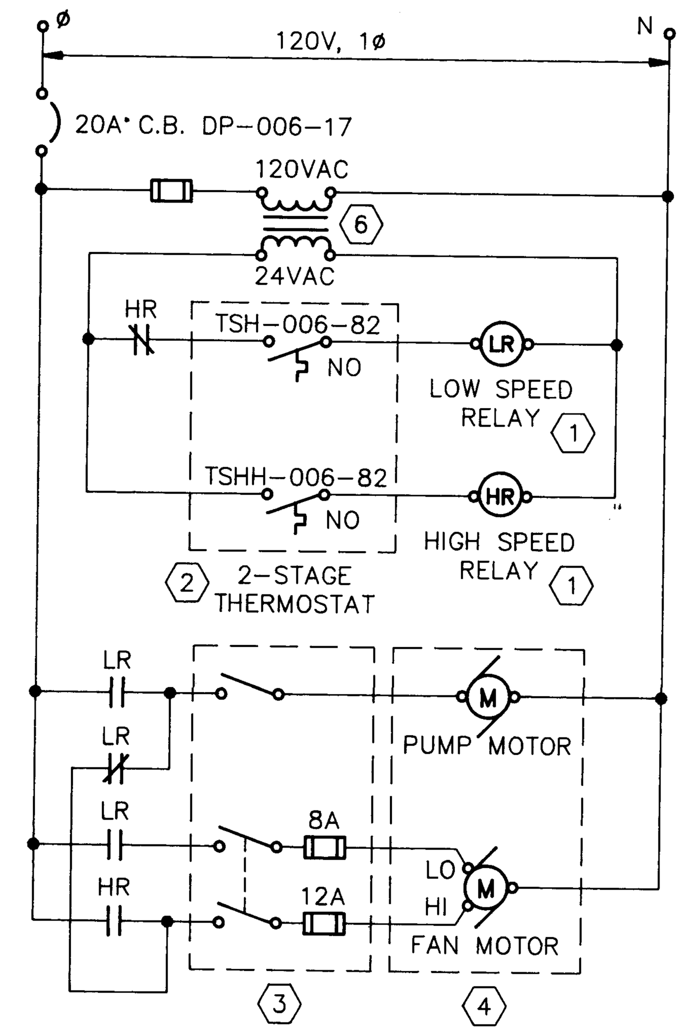


3/6 EVAPORATIVE COOLER SCHEMATIC

NO SCALE

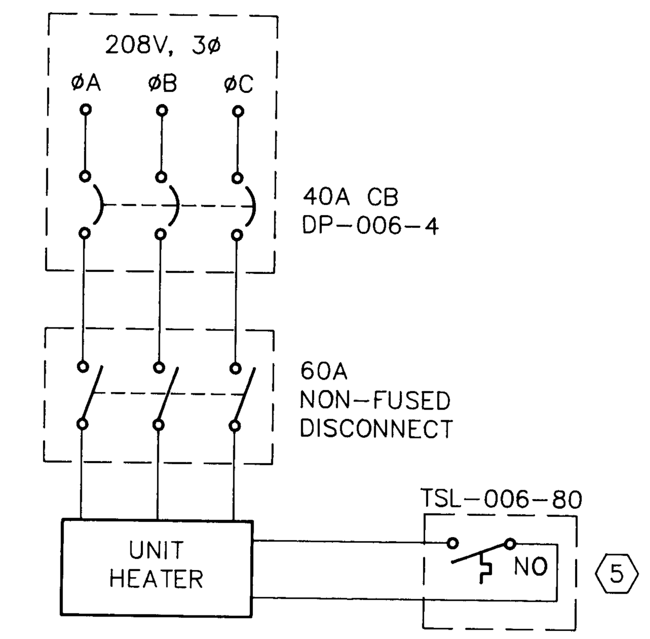


4/6 UNIT HEATER SCHEMATIC

NO SCALE

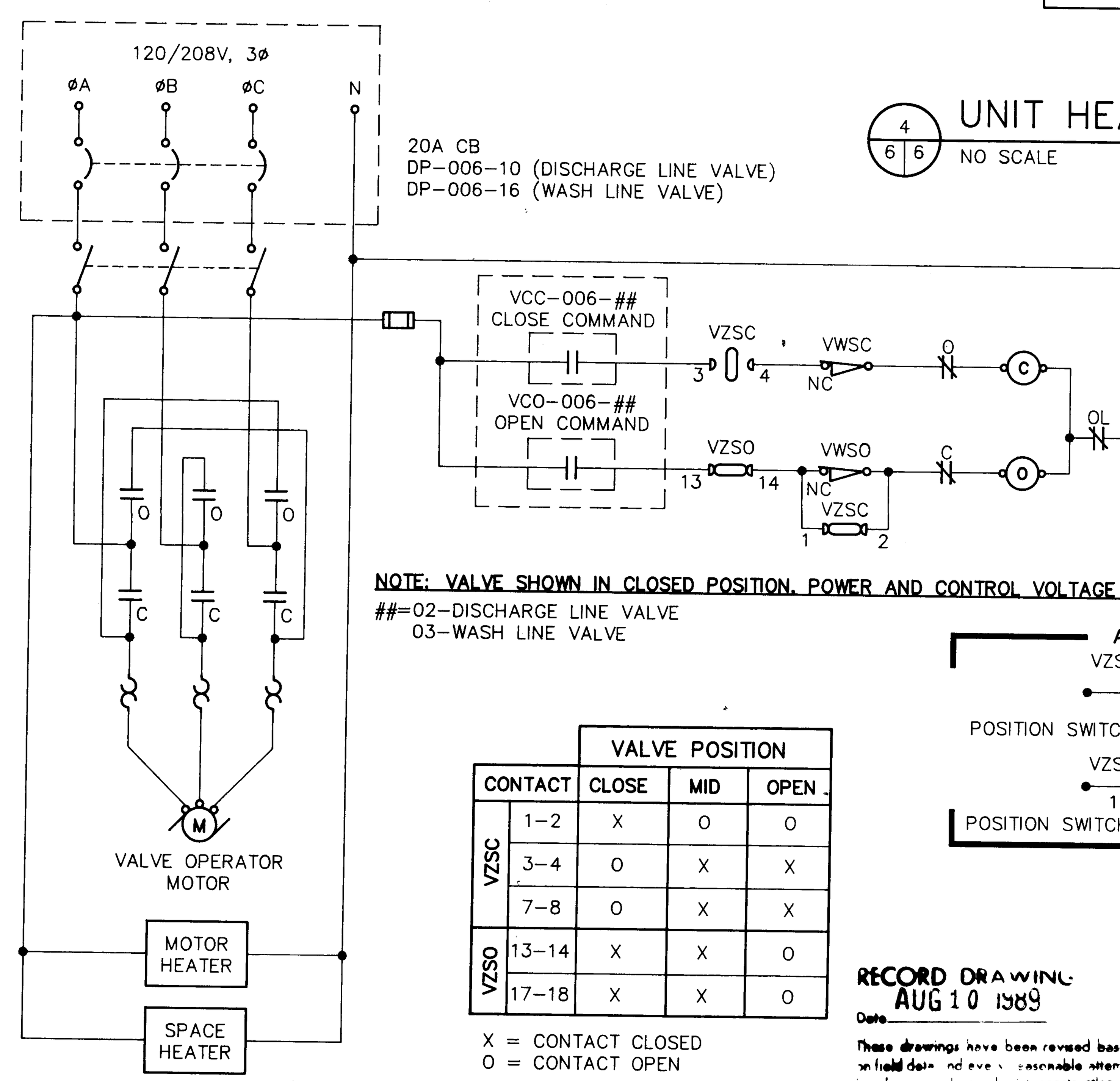


NOTE: VALVE SHOWN IN CLOSED POSITION, POWER AND CONTROL VOLTAGE OFF

##=02-DISCHARGE LINE VALVE
03-WASH LINE VALVE

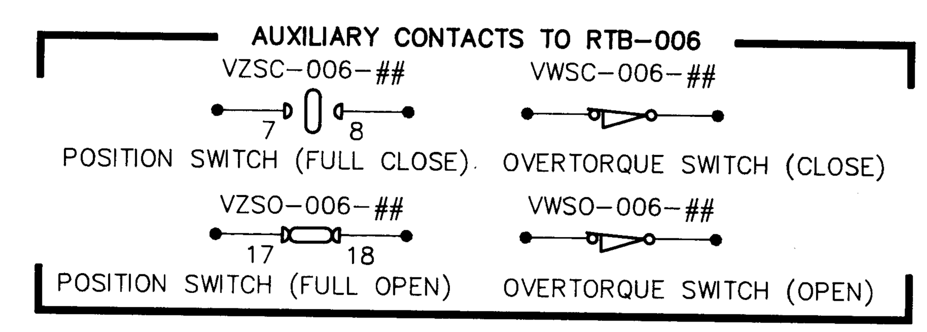


| | CONTACT | VALVE POSITION CLOSE | MID | OPEN |
|---|---|---|---|---|
| VZSC | 1-2 | X | O | O |
| | 3-4 | O | X | X |
| | 7-8 | O | X | X |
| VZSO | 13-14 | X | X | O |
| | 17-18 | X | X | O |

X = CONTACT CLOSED
O = CONTACT OPEN

2/6 VALVE OPERATOR CONTROL SCHEMATIC

NO SCALE (TYPICAL FOR WASH LINE AND DISCHARGE VALVES.)

RECORD DRAWING
AUG 10 1989

These drawings have been revised based on field data and every reasonable attempt has been made to depict construction actually performed.

26 3338 2389

AS BUILT INFORMATION

| CONTRACTOR | |
|---|---|
| WORK STAKED BY | DATE |
| INSPECTOR'S ACCEPTANCE BY | DATE |
| FIELD VERIFICATION BY | DATE |
| DRAWINGS CORRECTED BY | DATE |

MICRO-FILM INFORMATION

RECORDED BY — DATE — NO.

BENCH MARKS

SURVEY INFORMATION — FIELD NOTES — NO. — BY — DATE

ENGINEER'S SEAL: DAVID A. DOZIER, NEW MEXICO 9985, REGISTERED PROFESSIONAL ENGINEER

| NO. | DATE | REMARKS | BY |
|---|---|---|---|
| 1 | 2/13/89 | FIELD REV. NO. 1 | LH |

| REVISIONS | | |
|---|---|---|
| DESIGN | | |
| DESIGNED BY | D. DOZIER | DATE 9-29-88 |
| DRAWN BY | T. LAKE | DATE 9-29-88 |
| CHECKED BY | J. KEALY | DATE 9-29-88 |

805611E02,8056CTL

CITY OF ALBUQUERQUE
MUNICIPAL DEVELOPMENT DEPARTMENT
ENGINEERING DIVISION

TITLE: WALKER NO.2 WELL EQUIPMENT CONTROL SCHEMATICS

| APPROVALS | ENGINEER | DATE | APPROVALS | ENGINEER | DATE |
|---|---|---|---|---|---|
| City Engineer | | | Liquid Waste | | |
| A.C.E. Design | | | Traffic | | |
| A.C.E.-Hydrology | | | Water | | |

DRAWING NO. 3338 — MAP NO. — SHEET E-6 OF E-9

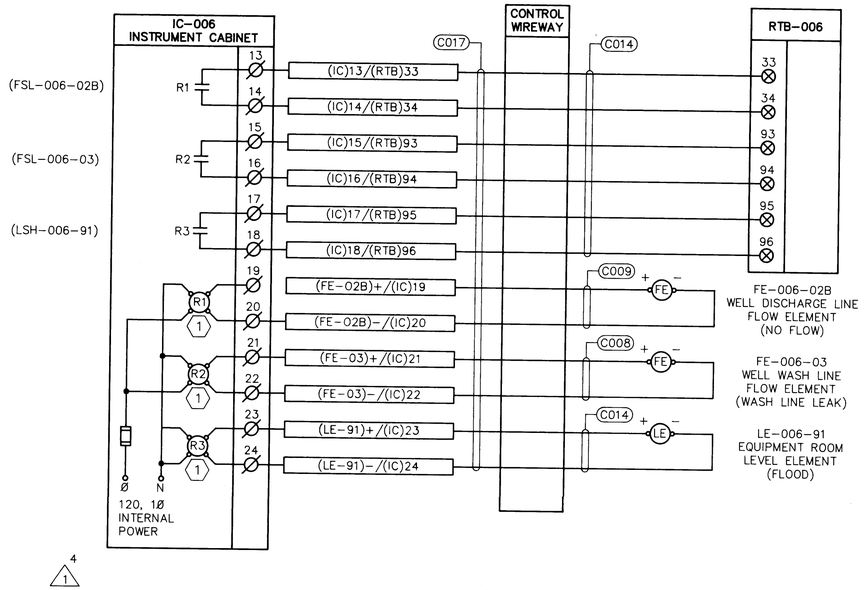


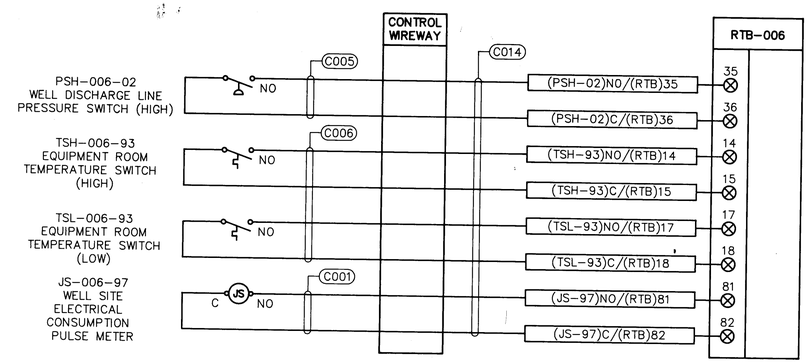


## GENERAL NOTES

1. SEE SHEET E-1 FOR SYMBOLS LEGEND.
2. SEE SHEET E-2 FOR CONDUIT SCHEDULES.

## KEYED NOTES

1 B/W CONTROLS INC. RELAY. SEE SECTION 13315 OF THE SPECIFICATIONS.

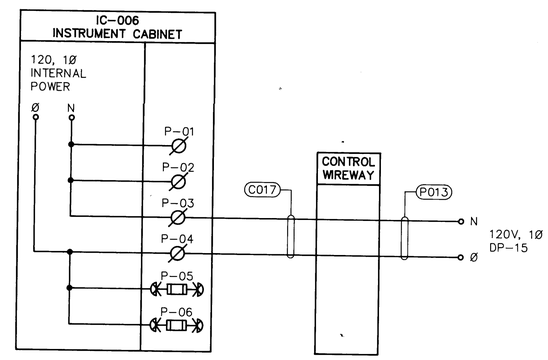


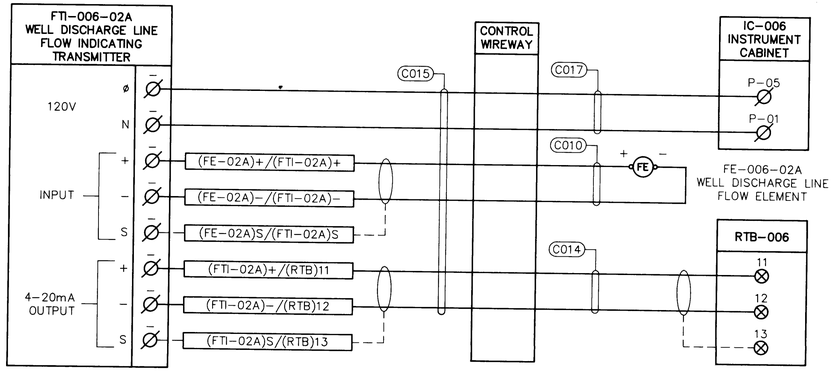


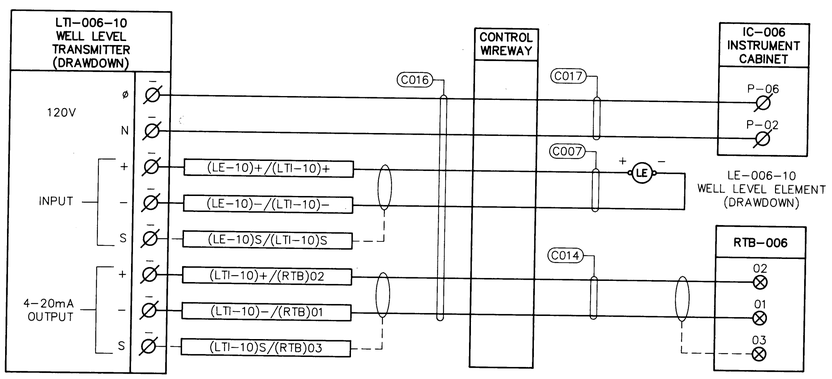


RECORD DRAWING
AUG 10 1989
Date
These drawings have been revised on field data and are reasonable has been made to depict conditions actually performed

AS BUILT INFORMATION
CONTRACTOR
WORK STAKED BY
INSPECTOR'S ACCEPTANCE BY
FIELD VERIFICATION BY
DRAWINGS CORRECTED BY
DATE
MICRO-FILM INFORMATION
RECORDED BY
DATE
NO.

BENCH MARKS

SURVEY INFORMATION
FIELD NOTES
NO. | BY | DATE

ENGINEER'S SEAL
DAVID A. DOZIER
NEW MEXICO
9985
REGISTERED PROFESSIONAL ENGINEER

| NO. | DATE | REMARKS |
|---|---|---|
| 1 | 2-13-89 | FIELD REVISION NO.1 |

REVISIONS

| | BY | DATE |
|---|---|---|
| DESIGN | LH | |
| DESIGNED BY D. DOZIER | | DATE 9-29-88 |
| DRAWN BY T. LAKE | | DATE 9-29-88 |
| CHECKED BY J. KEALY | | DATE 9-29-88 |

8 2 3 4 5 6 7 8 9 10 11 12
2 6 3 3 3 8 2 4 8 9

8056E11ED1,8056E7

CITY OF ALBUQUERQUE
MUNICIPAL DEVELOPMENT DEPARTMENT
ENGINEERING DIVISION

TITLE: WALKER NO.2 WELL EQUIPMENT
INTERCONNECTION DIAGRAMS

| APPROVALS | ENGINEER | DATE | APPROVALS | ENGINEER | DATE |
|---|---|---|---|---|---|
| City Engineer | | | Liquid Waste | | |
| A.C.E. Design | | | Traffic | | |
| A.C.E.-Hydrology | | | Water | | |

DRAWING NO. 3338 | MAP NO. | SHEET E-7 OF E-9

## GENERAL NOTES

1. SEE SHEET E-1 FOR SYMBOLS LEGEND.
2. SEE SHEET E-2 FOR CONDUIT SCHEDULES.

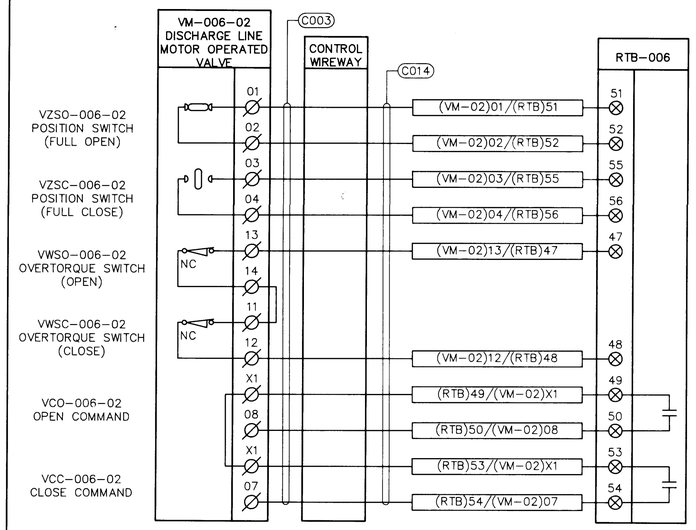


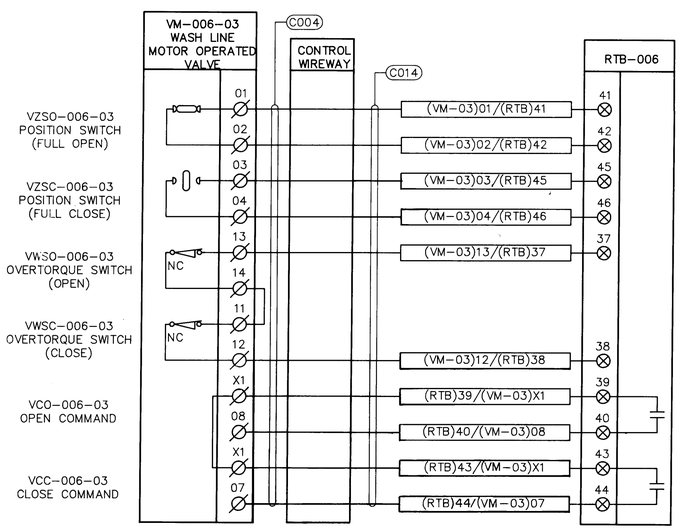


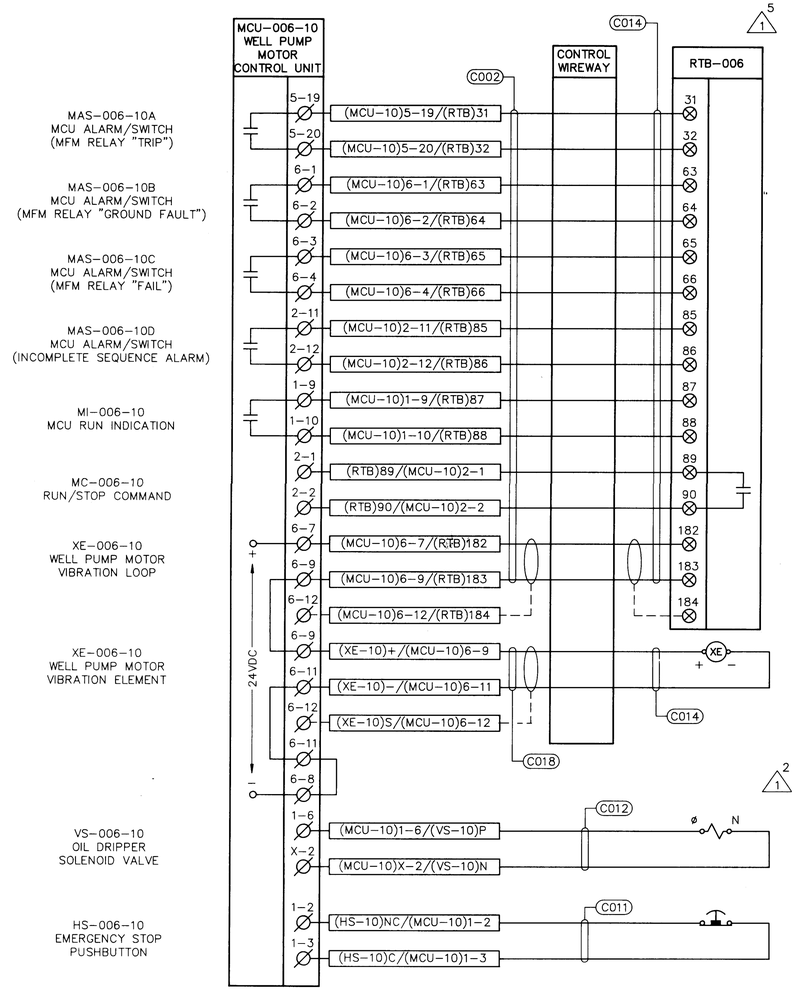


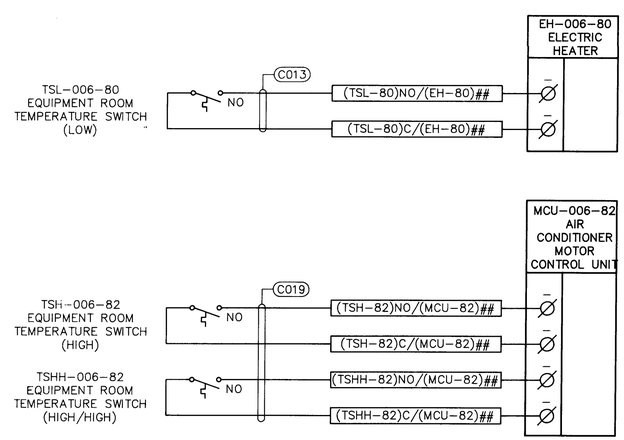


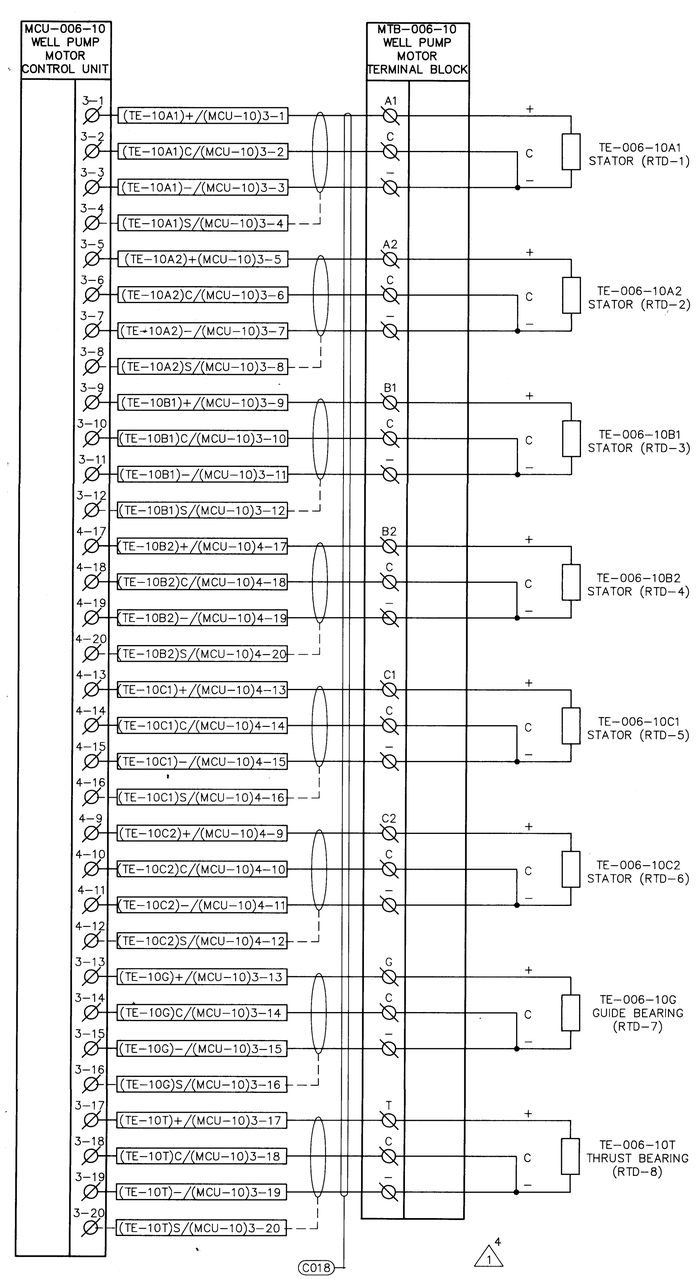


805611ED1,8056E7A

RECORD DRAWING
AUG 10 1989
Date
These drawings have been revised based on field data and every reasonable attempt has been made to depict construction actually performed

AS BUILT INFORMATION
CONTRACTOR
WORK STAKED BY — DATE
WORK INSPECTED BY — DATE
ACCEPTANCE BY — DATE
FIELD VERIFICATION BY — DATE
DRAWINGS CORRECTED BY — DATE
MICRO-FILM INFORMATION
RECORDED BY — DATE
NO.

BENCH MARKS

SURVEY INFORMATION
FIELD NOTES
NO. | BY | DATE

ENGINEER'S SEAL
DAVID A. DOZIER
NEW MEXICO
9985
REGISTERED PROFESSIONAL ENGINEER

| NO. | DATE | REMARKS | BY |
|---|---|---|---|
| 4 | | FIELD REVISION NO.1 | LH |
| 5 | | REVISIONS | |

DESIGN
DESIGNED BY D. DOZIER DATE 9-29-88
DRAWN BY T. LAKE DATE 9-29-88
CHECKED BY J. KEALY DATE 9-29-88

CITY OF ALBUQUERQUE
MUNICIPAL DEVELOPMENT DEPARTMENT
ENGINEERING DIVISION

TITLE: WALKER NO.2 WELL EQUIPMENT
INTERCONNECTION DIAGRAMS

| APPROVALS | ENGINEER | DATE | APPROVALS | ENGINEER | DATE |
|---|---|---|---|---|---|
| City Engineer | | | Liquid Waste | | |
| A.C.E. Design | | | Traffic | | |
| A.C.E.–Hydrology | | | Water | | |

DRAWING NO. 3338 | MAP NO. | SHEET E-8 OF E-9

## GENERAL NOTES

1. SEE SHEET E-1 FOR SYMBOLS LEGEND.
2. SEE SHEET E-2 FOR CONDUIT SCHEDULES.

## KEYED NOTES

1. PRIMARY METERING ENCLOSURE.
2. PRIMARY FUSED SWITCH.
3. POWER TRANSFORMER.
4. 1 INCH CHAMFER.
5. 8 INCH DEEP GRAVEL BETWEEN SLAB AND WALLS.
6. FINISH GRADE, 4" BELOW TOP OF SLAB.
7. 4 INCH SAND FILL.
8. INSULATED TYPE GROUNDING BUSHING. TOP OF BUSHING SHALL BE 3 INCHES ABOVE CONCRETE SLAB.
9. #4 AT 12" CENTERS EACH WAY, 3 INCHES FROM BOTTOM OF SLAB. BOND TO GROUND COUNTERPOISE SYSTEMS AS SHOWN ON SHEET E-5.
10. EXTEND #1/0 AWG BARE STRANDED COPPER TO ENCLOSURE GROUND LUG OR BUS.
11. COORDINATE EXACT LOCATION OF CONDUIT WITH EQUIPMENT MANUFACTURERS. SEAL CONDUIT OPENING AFTER INSTALLATION OF CONDUCTOR.
12. CONDUIT TO FIELD DEVICES AND PANELBOARD "DP-006" NOT SHOWN FOR DRAWING CLARITY.
13. 6" X 6" WIREWAY.

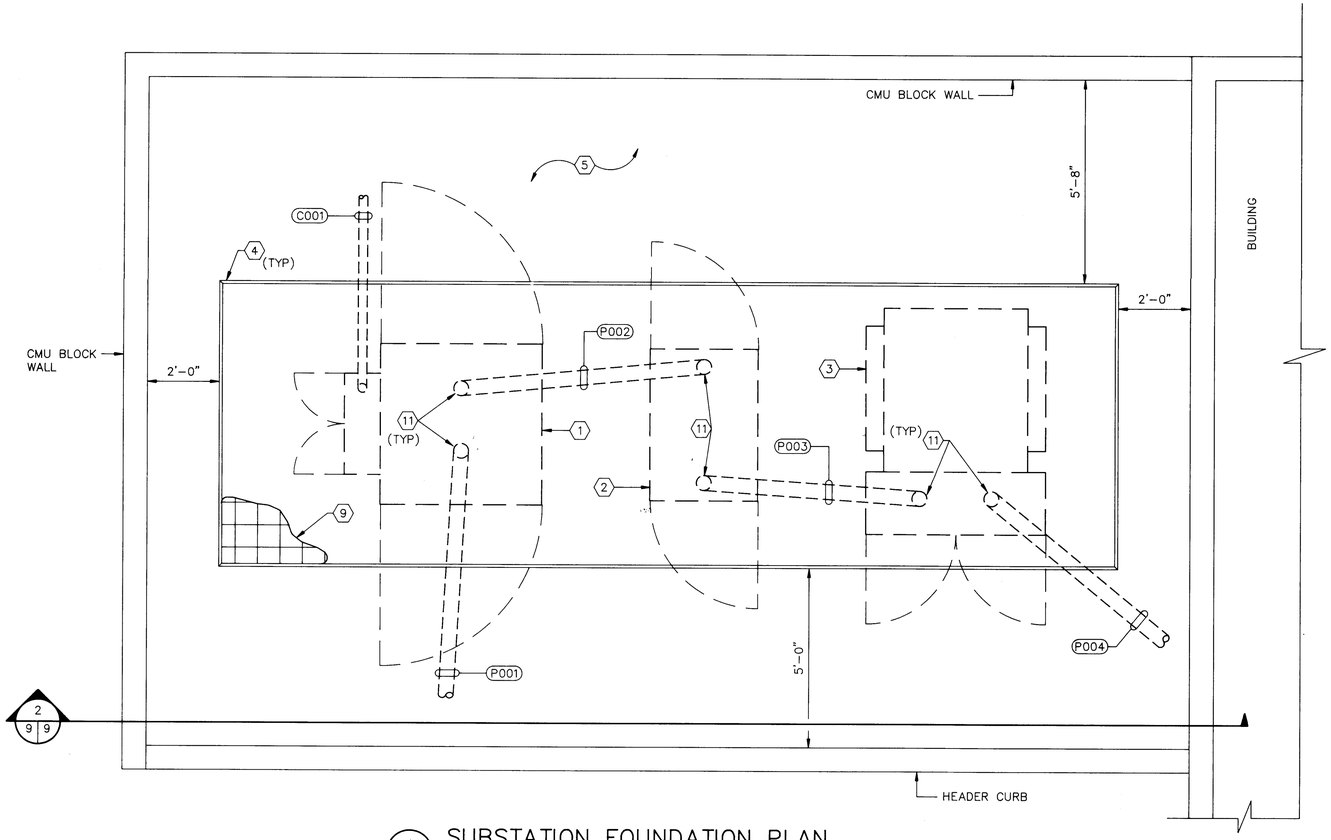


1/5|9 SUBSTATION FOUNDATION PLAN
SCALE: 1/2"=1'-0"

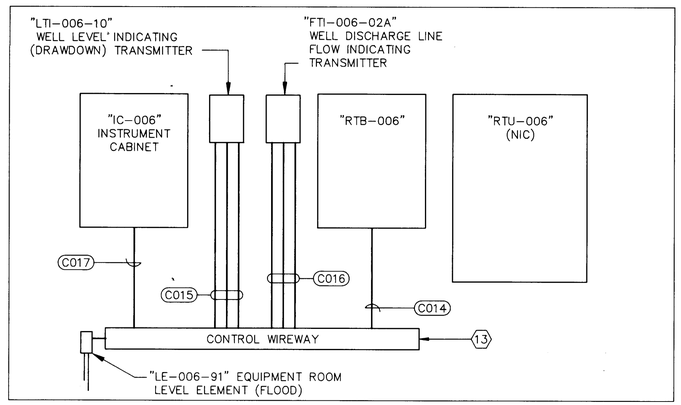


3/5|9 EQUIPMENT ROOM EAST WALL ELEVATION (12)
NOT TO SCALE

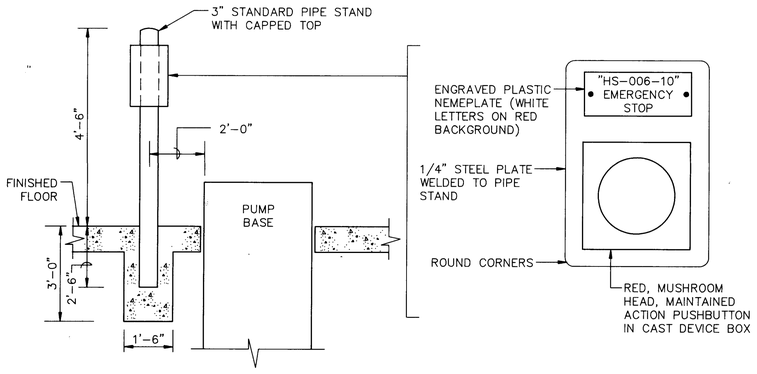


4/5|9 EMERGENCY STOP AND PUSHBUTTON DETAIL
NOT TO SCALE

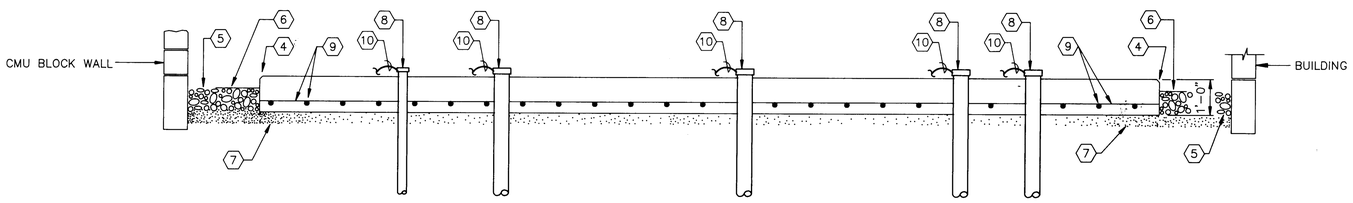


2/9|9 SUBSTATION FOUNDATION ELEVATION
SCALE: 1/2"=1'-0"

805611ED1,80560DET

RECORD DRAWING
Date AUG 10 1989
These drawings have been revised based on field data and every reasonable attempt has been made to depict construction actually performed

2 6 3 3 3 8 2 6 8 9

AS BUILT INFORMATION
CONTRACTOR
WORK STAKED BY — DATE
INSPECTOR ACCEPTANCE BY — DATE
FIELD VERIFICATION BY — DATE
DRAWINGS CORRECTED BY — DATE
MICRO-FILM INFORMATION
RECORDED BY — DATE
NO.

BENCH MARKS

SURVEY INFORMATION
FIELD NOTES
NO. | BY | DATE

ENGINEER'S SEAL
DAVID A. DOZIER NEW MEXICO 9985 REGISTERED PROFESSIONAL ENGINEER

| NO. | DATE | REMARKS | BY |
|---|---|---|---|
| 1 | 2-13-89 | FIELD REVISION NO.1 | LH |

REVISIONS

DESIGN
DESIGNED BY D. DOZIER DATE 9-29-88
DRAWN BY T. LAKE DATE 9-29-88
CHECKED BY J. KEALY DATE 9-29-88

CITY OF ALBUQUERQUE
MUNICIPAL DEVELOPMENT DEPARTMENT
ENGINEERING DIVISION

TITLE: WALKER NO.2 WELL EQUIPMENT
DETAILS

| APPROVALS | ENGINEER | DATE | APPROVALS | ENGINEER | DATE |
|---|---|---|---|---|---|
| City Engineer | | | Liquid Waste | | |
| A.C.E. Design | | | Traffic | | |
| A.C.E.-Hydrology | | | Water | | |

DRAWING NO. 3338 | MAP NO. | SHEET E-9 OF E-9

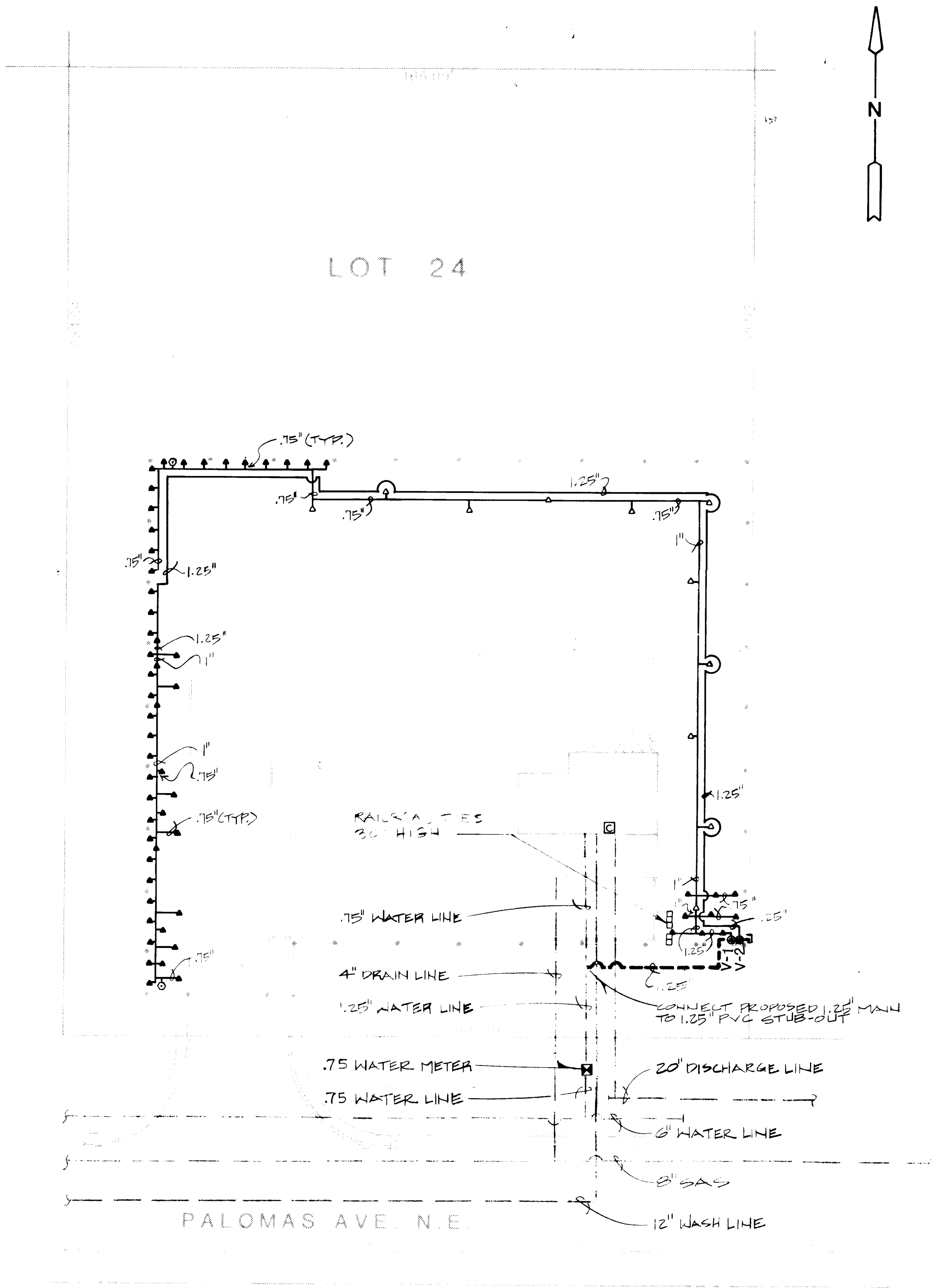


## IRRIGATION PLAN

SCALE: 1" = 20'

## IRRIGATION LEGEND

| Symbol | Description |
|---|---|
| ▪ | Water Meter, Size .75 |
| — — — | Main Line Piping, Sch. 40 PVC, 30" bury, size shown on plan. |
| ⊛ | Automatic Valve and Vacuum Breaker Assembly WEATHERMATIC 8024 BCR with CHAMPION 262, size 1"....................SEE DETAIL A/L-3 |
| ⊙ | Manual Drain Assembly, size .75"..................................SEE DETAIL B/L-3 |
| ⊓ | Solvent Weld Cap for future expansion, line size. |
| ——— | Lateral Piping, Sch. 40 PVC, 18" bury. |
| ▣ | Irrigation Controller, TORO 171-06-01 eight station, wall mount..........................................................SEE DETAIL C/L-3 |
| ▲ | Pop-Up Bubbler Assembly TORO 570C-3P with FB-25-PC nozzle and CKVL check valve.............................................SEE DETAIL D/L-3 |
| △ | Pop-Up Bubbler Assembly TORO 570C-3P with FB-50-PC nozzle and CKVL check valve.............................................SEE DETAIL D/L-3 |

## IRRIGATION NOTES

1. The Contractor shall adjust all valves, bubblers, sprinklers and controller for optimum coverage.
2. Contractor shall install manual drains on the lateral and main line piping at the lowest point to insure complete drainage of the laterals. Quantity shall be as required and shall be located on the "As-Built" drawings. Location shall be determined by the Contractor at time of installaton. See B/L3 minimum one per zone. Do not install main line manual drains between vacuum breaker and water meter.
3. All proposed irrigation piping shall be marked using marker tape and shall be laid horizontally 4" above piping. Piping laid in common trenches shall have marker tape for each pipe. Tape shall be 2" wide and marked "buried water line", blue in color and metallic for future location. Product is available from Pipeline Material Inc., Albuquerque, New Mexico (505) 821-2626 (or approved equal).
4. 24 volt wire shall be run from the controller to the closest irrigation trench, minimizing the amount of trenching required for the installation of the wire. The Contractor shall review the proposed routing of the 24 volt wire with the Architect for approval prior to installation.
5. All 24 volt wire shall be marked with a 6" wide yellow marker tape and marked "Warning-Electrical". Lay marker tape horizontally 4" above wire.
6. In addition to other specified tests and inspections, the irrigation systems shall be performance tested and witnessed by the Compliance Officer from the City of Albuquerque Health and Environment Department for conformance with the provisions of the Waste Water Ordinance.
7. Mark all 24 volt wire ends with 3M STD-09 wire marker tape at the valve box and controller locations.
8. The Contractor shall sequentially wire valves to controller as indicated on plan (V-1 to Station One, V-2 to Station Two)
9. All valve boxes shall be supported by cinder blocks, minimum 2 per valve box. Install blocks in a manner which will prevent contact with piping, wires, valves, etc.
10. Upon Architect's request, the Contractor shall substitute and install nozzles other than those specified on plan at no additional cost to the Owner.

AS BUILT INFORMATION

MICRO-FILM INFORMATION

BENCH MARKS

SURVEY INFORMATION — FIELD NOTES | NO | BY | DATE

ENGINEER'S SEAL

REVISIONS — NO. | DATE | REMARKS | BY

DESIGN — DESIGNED BY ARJ DATE 9-28-89; DRAWN BY ARJ DATE 9-28-89; CHECKED BY ECR DATE 9-28-89

MORROW & COMPANY
LANDSCAPE ARCHITECTS
210 La Veta Drive NE
Albuquerque, New Mexico 87108
505-268-2266

CITY OF ALBUQUERQUE
PUBLIC WORKS DEPARTMENT
ENGINEERING GROUP

TITLE: WALKER NO. 2 WELL EQUIPMENT

IRRIGATION PLAN

| APPROVALS | ENGINEER | DATE | APPROVALS | ENGINEER | DATE |
|---|---|---|---|---|---|
| DRC Chair | | | | | |
| Trans Dev | | | | | |
| Utility Dev | | | | | |

DRAWING NO. 3338 | MAP NO. D-21 | SHEET L-1 OF

26 3338 2789

RECORD DRAWING
August 1989
Drawings have been revised based ... and every reasonable attempt made to depict construction as performed

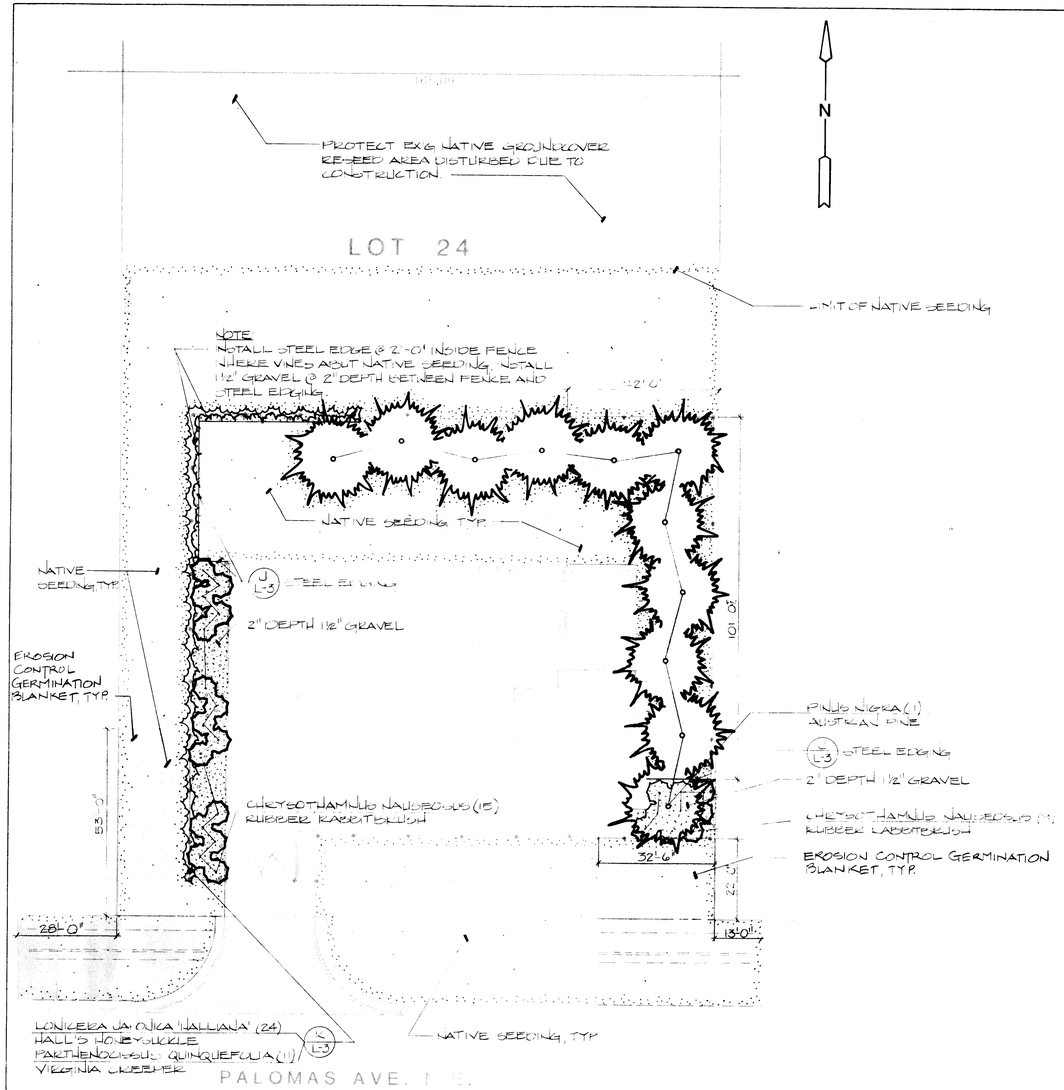


## PLANTING PLAN

SCALE: 1" = 20'

## PLANT LIST

| BOTANICAL NAME | COMMON NAME | QUANTITY | SIZE | COMMENTS |
|---|---|---|---|---|
| TREES | | | | |
| Pinus nigra | Austrian Pine | 11 | 4'-6' height | 15 gallon |
| SHRUBS | | | | |
| Chrysothamnus nauseosus | Rubber Rabbitbrush | 24 | 2'-3' height | 5 gallon |
| VINES | | | | |
| Lonicera japonica 'Halliana' | Hall's Honeysuckle | 24 | min. 4 runners of 12" length | 1 gallon |
| Parthenocissus quinquefolia | Virginia Creeper | 11 | min. 4 runners of 12' length | 1 gallon |
| GROUND COVER | | | | |
| | | 25,100 SF | | |
| Native Seed: | | | | |
| Bouteloua curtipendula | Sideoats Grama | | | 5 lbs. PLS/acre at 1/2" depth |
| Eragrostis lehmanniana | Lehmann Lovegrass | | | 2 lbs. PLS/acre at 1/2" depth |
| Oryzopsis hymenoides | Indian Ricegrass | | | 5 lbs. PLS/acre at 4" depth |
| Sporobolus cryptandrus | Sand Dropseed | | | 2 lbs./acre at 1/2" depth |
| Plants of the Southwest #4000, Desert Mix | Wildflowers | | | |

## PLANTING NOTES

1. Where plans call for vines to be planted next to a fence, vines shall be planted inside fence 10" from fence. The Contractor shall lead vines up fence upon installation.
2. For tree planting details, see Sheet L-3.
3. For shrub planting details, see Sheet L-3.
4. In case of discrepancy in plant quantities shown on the Plant List and those shown on the Planting Plan, the quantities shown on the plan shall govern.
5. Native seed shall be drill seeded and mulched in accordance with 'Class A' seeding operations.
6. Native seed shall be watered by a temporary water source for 6 weeks at the following rates:
   Weeks 1 thru 3: 1/2" water twice per week.
   Weeks 3 thru 6: 1/2" water once per week.
7. If there is a discrepancy in field or nursery trees between the container size called out under "Comments" and the caliper and height called out under "Size", the specified tree must meet the caliper and height requirements specified under "Size" even if a larger container size is required to meet these specifications, at no additional cost to the Owner.

RECORD DRAWING
AUG 10 1989

2 6 3 3 3 8 2 8 8 9

AS BUILT INFORMATION
BENCH MARKS
SURVEY INFORMATION
FIELD NOTES
NO. BY DATE
ENGINEER'S SEAL

REVISIONS
NO. DATE REMARKS BY

DESIGN
DESIGNED BY ECR DATE 9-28-88
DRAWN BY RPP DATE 9-28-88
CHECKED BY ECR DATE 9-28-88

MORROW & COMPANY
LANDSCAPE ARCHITECTS
210 La Veta Drive NE
Albuquerque, New Mexico 87108
505-268-2266

CITY OF ALBUQUERQUE
PUBLIC WORKS DEPARTMENT
ENGINEERING GROUP

TITLE: WALKER NO. 2 WELL EQUIPMENT

PLANTING PLAN

| APPROVALS | ENGINEER | DATE | APPROVALS | ENGINEER | DATE |
|---|---|---|---|---|---|
| D.R.C. Chair | | | | | |
| Trans. Dev. | | | | | |
| Utility Dev. | | | | | |

| DRAWING NO. | MAP NO | SHEET | OF |
|---|---|---|---|
| 3338 | D-21 | L-2 | |

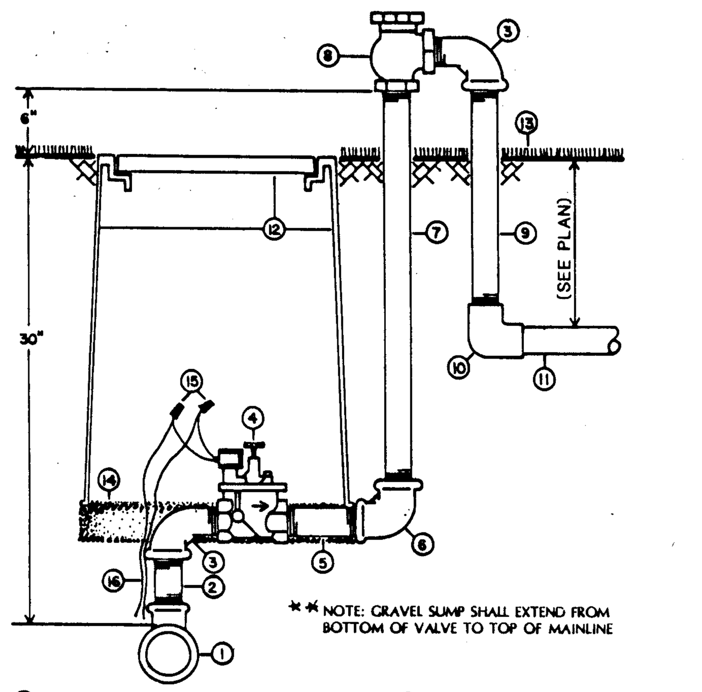


1. GALVANIZED TEE - 1.25"x1.25"x1"
2. GALVANIZED NIPPLE - 4" LONG
3. GALVANIZED STREET ELL
4. AUTOMATIC VALVE (See Plan)
5. GALVANIZED NIPPLE - 6" LONG
6. GALVANIZED ELL
7. GALVANIZED NIPPLE - 30" LONG
8. CHAMPION 262 SERIES VACUUM BREAKER
9. GALVANIZED NIPPLE
10. SCH. 40 PVC ELL - SXT
11. LATERAL PIPING
12. CARLON 24" LOCKING VALVE BOX W/ 6" EXTENSIONS*
13. FINISH GRADE
14. GRAVEL SUMP**
15. SCOTCH-LOK 3576 CONNECTOR
16. WIRE TO CONTROLLER SEE SPECS.

*NOTE: VALVE BOX SHALL EXTEND TO THE TOP OF MAINLINE

A / L-3 AUTOMATIC VALVE ASSEMBLY — NTS

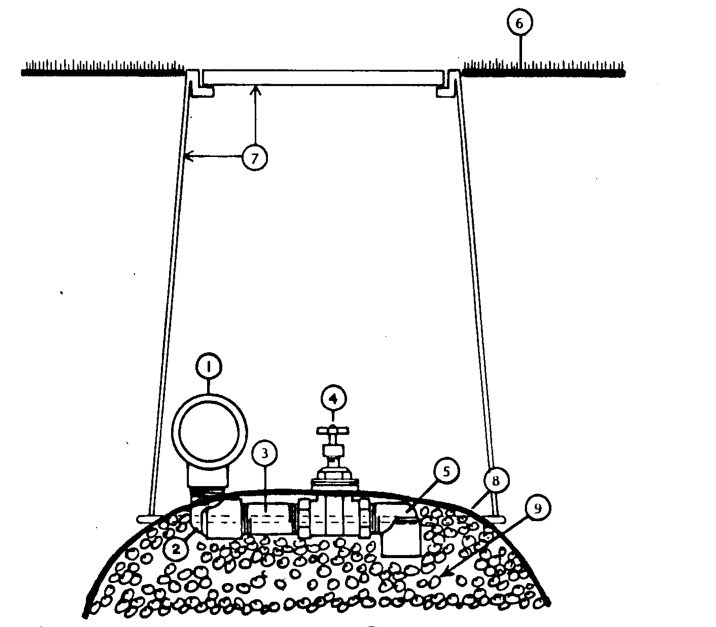

1. MAINLINE OR LATERAL TEE
2. PVC STREET ELL TXT
3. SCH. 80 PVC NIPPLE - 3" LONG
4. CHAMPION 100RS-075, 3/4" STRAIGHT VALVE
5. PVC STREET ELL TXS
6. FINISH GRADE
7. INTERCONTINENTAL PLASTICS 24" LOCKING VALVE BOX W/ 6" EXTENSIONS.
8. 6 MIL. POLY. COVER
9. GRAVEL SUMP (6 CUBIC FEET)

B / L-3 MANUAL DRAIN ASSEMBLY — NTS

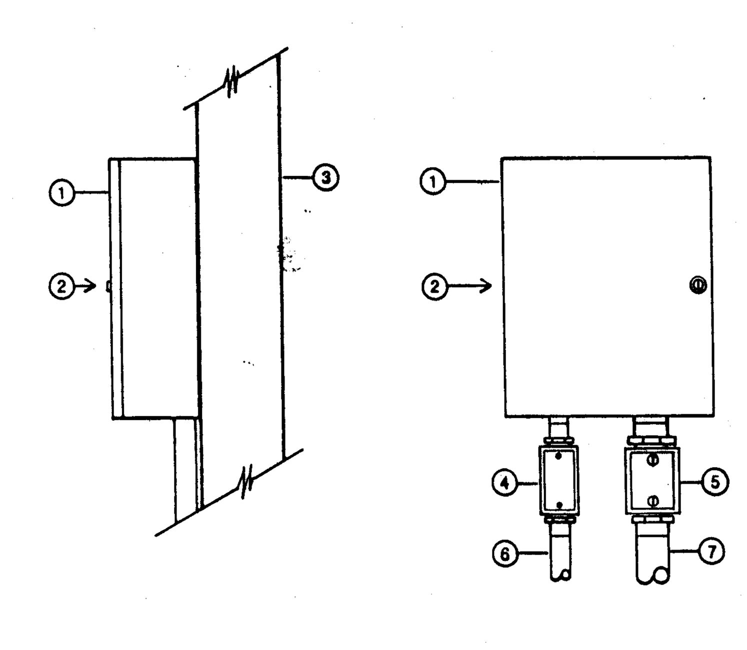

1. CONTROLLER (SEE IRRIGATION LEGEND), MOUNT SECURLY TO WALL
2. EYE LEVEL
3. WALL
4. 3/4" LB BOX
5. 1" LB BOX
6. 3/4" RIGID CONDUIT (HOUSING 120VOLT, 12 GAUGE WIRES)
7. EMT CONDUIT (HOUSING 24VOLT, 14 GAUGE CONTROL WIRES. SIZE 1")

C / L-3 CONTROLLER DETAIL — NTS

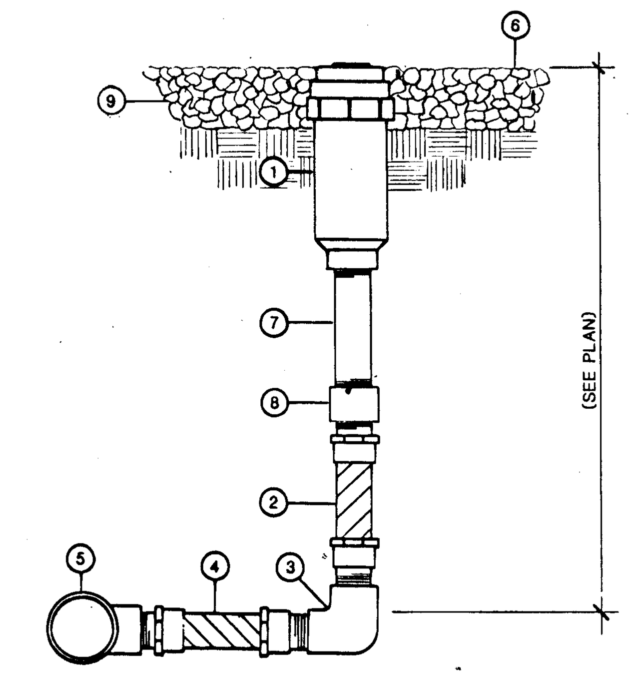


1. POP-UP BUBBLER ASSEMBLY (SEE PLAN)
2. 1/2"x 6" MAxMA FLEX NIPPLE PVC
3. 1/2" PVC THREADED ELL
4. 1/2"x6" MAxMA FLEX NIPPLE PVC
5. PVC LATERAL TEE SST
6. FINISH GRADE/TOP OF BARK MULCH
7. 1/2" PVC NIPPLE (LENGTH AS REQUIRED)
8. 1/2" PVC THREADED COUPLING
9. BARK MULCH, 2" DEPTH

D / L-3 POP-UP BUBBLER ASSEMBLY — NTS

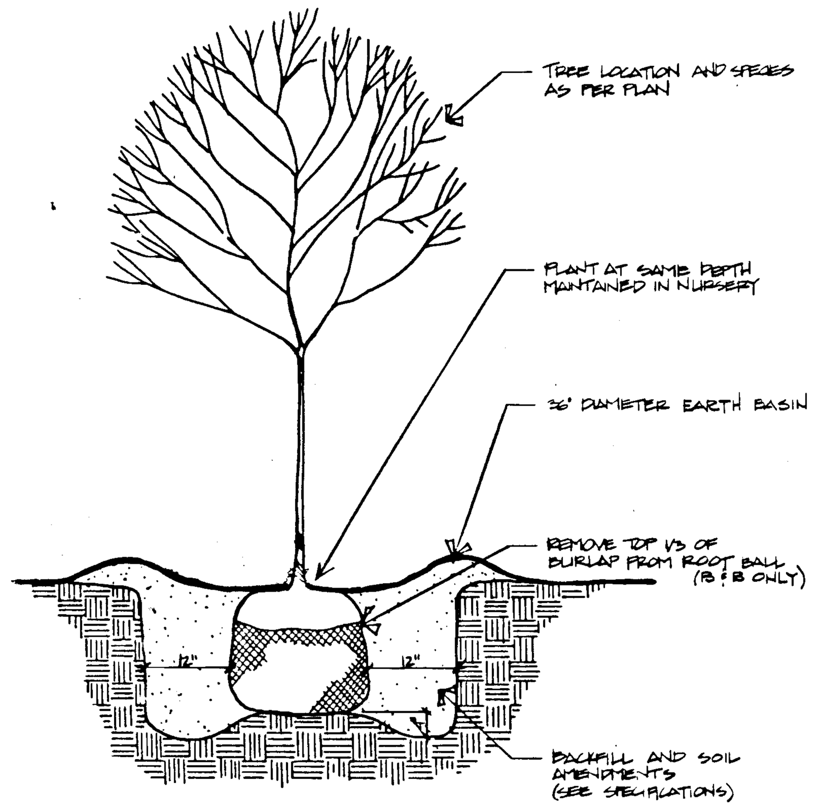


E / L-3 TREE PLANTING DETAIL — NTS

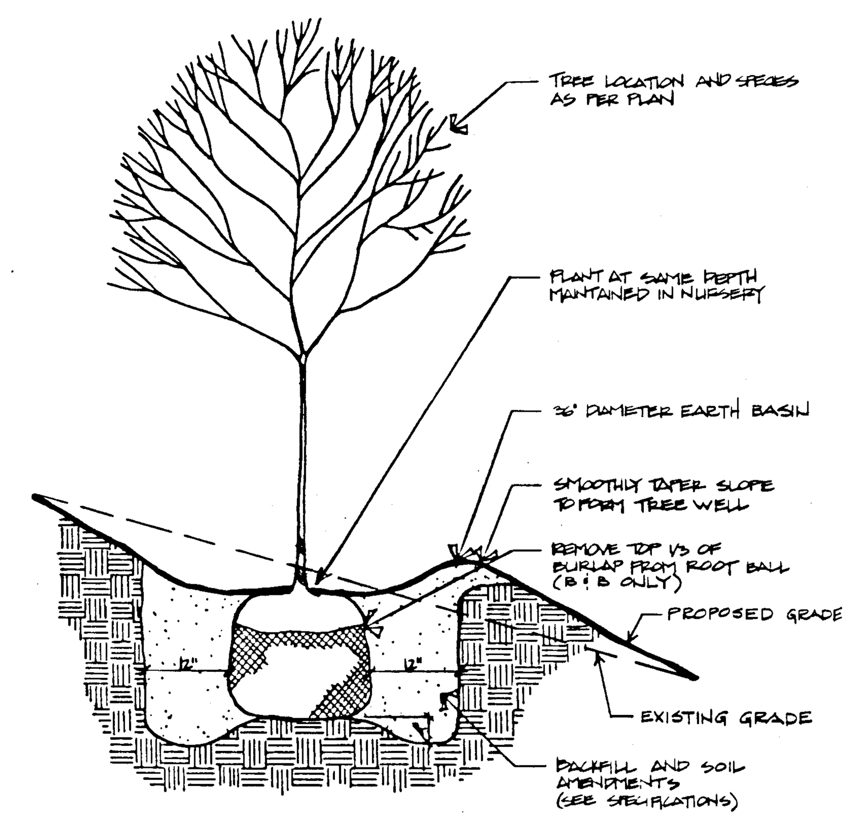


F / L-3 TREE PLANTING DETAIL - ON SLOPE — NTS

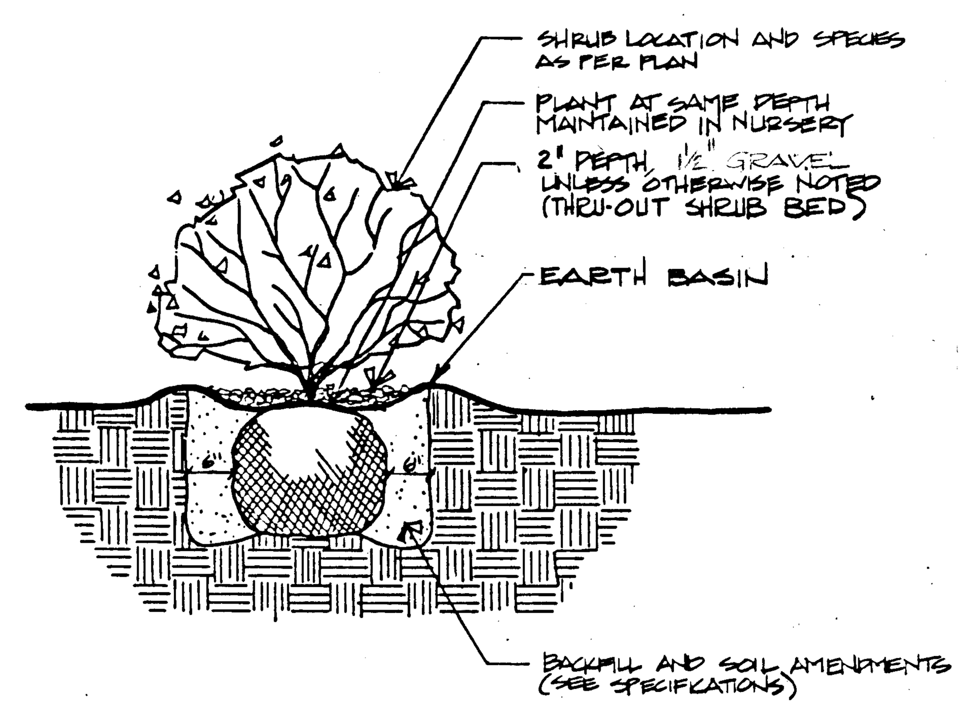


G / L-3 SHRUB PLANTING DETAIL — NTS

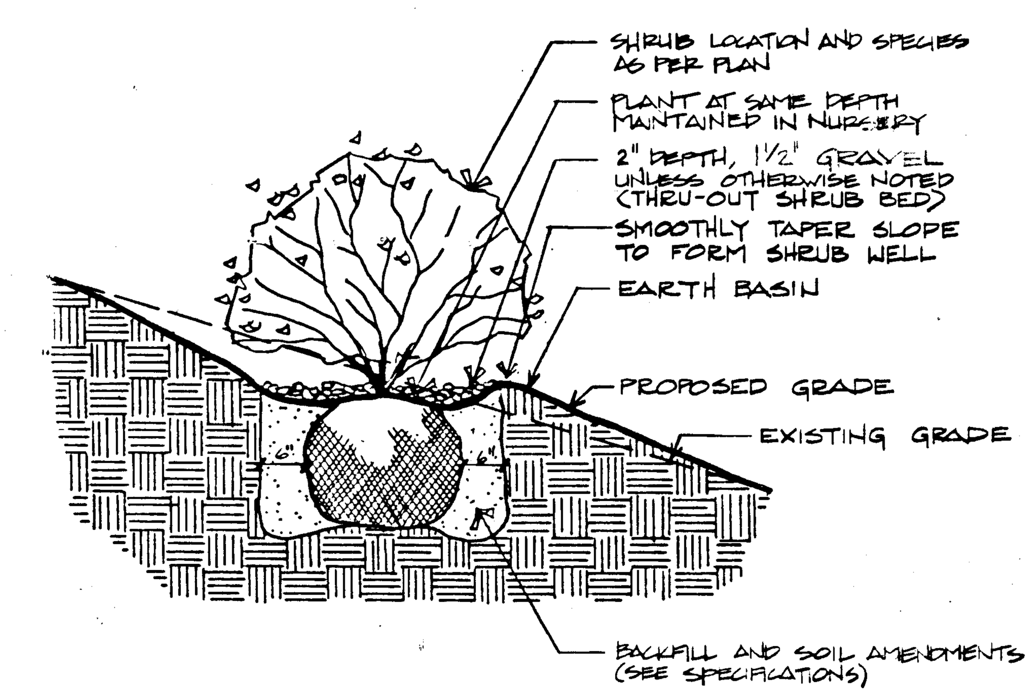


H / L-3 SHRUB PLANTING DETAIL - ON SLOPE — NTS

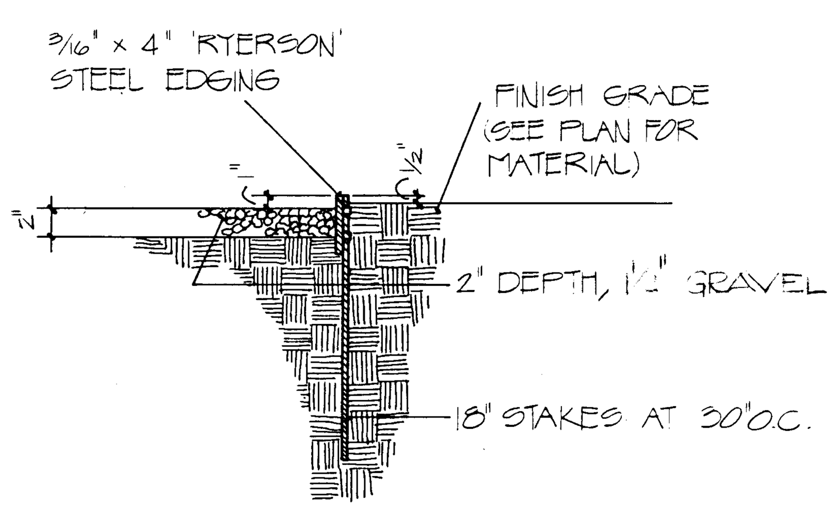


J / L-3 STEEL EDGING DETAIL — NTS

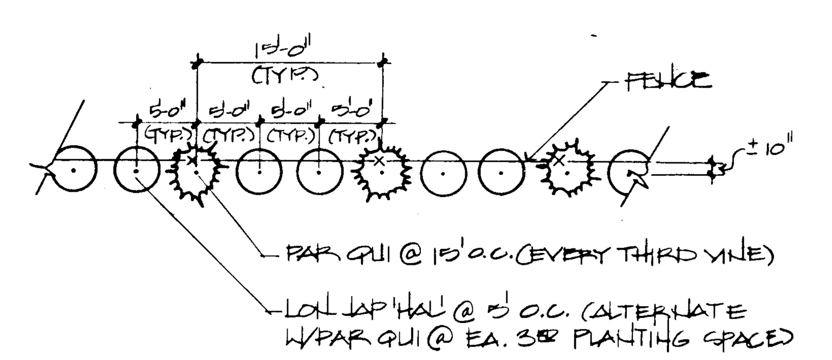


K / L-3 VINE PLANTING DETAIL — NTS

RECORD DRAWING
Date AUG 1989
These drawings have been revised ... field data and every reasonable ... been made to depict construc... ...ally performed

26 | 3338 | 2989

AS BUILT INFORMATION — CONTRACTOR / WORK STAKED BY / INSPECTOR'S ACCEPTANCE BY / FIELD VERIFICATION BY / DRAWINGS CORRECTED BY — DATE

MICRO-FILM INFORMATION — RECORDED BY — DATE — NO.

BENCH MARKS

SURVEY INFORMATION — FIELD NOTES — NO. — BY — DATE

ENGINEER'S SEAL

REVISIONS — NO. — DATE — REMARKS — BY

DESIGN — DESIGNED BY ECR — DATE 9-28-88; DRAWN BY RPP — DATE 9-28-88; CHECKED BY ECR — DATE 9-28-88

MORROW & COMPANY
LANDSCAPE ARCHITECTS
210 La Veta Drive NE
Albuquerque, New Mexico 87108
505-268-2266

CITY OF ALBUQUERQUE
PUBLIC WORKS DEPARTMENT
ENGINEERING GROUP

TITLE: WALKER NO. 2 WELL EQUIPMENT
LANDSCAPE DETAILS

| APPROVALS | ENGINEER | DATE | APPROVALS | ENGINEER | DATE |
|---|---|---|---|---|---|
| D.R.C. Chair | | | | | |
| Trans. Dev | | | | | |
| Utility Dev | | | | | |
| | | | | | |

DRAWING NO. 3338 | MAP NO. D-21 | SHEET L-3 OF