ACADEMY ROAD WATER, SAS & DRAINAGE REHABILITATION

CONCORDIA ROAD N.E. TO DENALI ROAD N.E.

-LEGEND-

MATERIALS

- CONCRETE
- RIP-RAP

LINES

- RIGHT-OF-WAY
- PROPERTY LINE (PLAN)
- RIGHT-OF-WAY (SECTION)
- CENTERLINE
- EASEMENT LINE
- MATCH LINE
- SECTION CUT LINE

EARTHWORK

	EXISTING	NEW
CONTOUR LINE	25	25
SPOT ELEVATION		
PROJECT/ PHASE BOUNDARY		
SWALE		
DIRECTION OF FLOW		

MISCELLANEOUS UTILITIES

- GAS LINE
- UNDERGROUND TELEPHONE
- UNDERGROUND ELECTRICAL
- STORM DRAIN
- STORM DRAIN MANHOLE
- STORM DRAIN INLET

SANITARY SEWER

- SANITARY SEWER LINE
- SANITARY SEWER MANHOLE
- SAS SERVICE CONNECTIONS
- SAS CAP OR PLUG
- ENCASEMENT

WATER

- WATER LINE WITH CAP
- WATER SERVICE CONNECTIONS
- GATE VALVE
- FIRE HYDRANT
- BUTTERFLY VALVE
- REDUCER
- WATER PRESSURE ZONE BOUNDARY

WATER FITTINGS

- CAPS AND PLUGS
- ELBOW
- CROSS
- TEE

MISCELLANEOUS

- EDGE OF ASPHALT
- FIELD FENCE/CHAINLINK FENCE
- COMMON YARD WALL/BLOCK WALL
- RETAINING WALL
- POWER OR TELEPHONE POLE
- TREE

INDEX TO SHEETS

SHEET TITLE	SHEET NO.
TITLE, LEGEND, VICINITY MAP, INDEX OF DRAWINGS	1
GENERAL NOTES, SPECIAL NOTES, SUGGESTED CONSTRUCTION SEQUENCE AND UTILITY COMPOSITE PLAN	2
WATERLINE LEAKAGE DRAIN SYSTEM & CONSTRUCTION DRAINAGE	3
PLAN AND PROFILE - STORM DRAINAGE STATION 1+00 TO STA. 2+61.08	4
PLAN AND PROFILE - WATERLINE STATION 9+40 TO 14+70	5
PLAN AND PROFILE - SAS LINE STATION 10+00 TO 14+55	6
PLAN AND PROFILE - PAVING & IRRIGATION DRAIN SYSTEM STATION 9+54 TO 14+75	7
SECTIONS AND DETAILS - WATER AND SAS	8
SECTIONS AND DETAILS - PAVING	9
CONSTRUCTION TRAFFIC CONTROL PHASE - I	10
CONSTRUCTION TRAFFIC CONTROL PHASE - II	11
IRRIGATION REMOVAL PLAN	12
IRRIGATION IMPROVEMENTS	13
IRRIGATION DETAILS	14
PLANTING IMPROVEMENTS	15
WATER SHUT-OFF PLAN	16

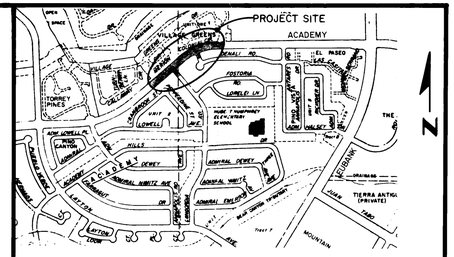

SCALE 1" = 100'

LOCATION MAP (E-21)

ABBREVIATIONS (APPLY TO ALL SHEETS)

AC - ASBESTOS CEMENT
CCYL - CONCRETE CYLINDER LINE
CI - CAST IRON
CL - CENTERLINE
DIP - DUCTILE IRON PIPE
EX - EXISTING
ELEV - ELEVATION
F-F - FACE TO FACE
F/F - FEET/FOOT
FH - FIRE HYDRANT
FO - FIBER OPTIC CABLE
G - GAS
HP - HIGH PRESSURE
MH - MANHOLE
REL - RELOCATE
ROW - RIGHT-OF-WAY
SAS - SANITARY SEWER
SD - STORM DRAIN
TP - TOP OF PIPE
UE - UNDERGROUND ELECTRIC
UT - UNDERGROUND TELEPHONE CABLE
UTV - UNDERGROUND CABLE TELEVISION
VCP - VITRIFIED CLAY PIPE
W OR WL - WATERLINE
F.E.J. - FLEXIBLE EXPANSION JOINT

APPROVAL OF AS BUILT DRAWINGS
CHIEF CONSTRUCTION ENGINEER
DATE

C of A PWD Maps & Records
2 3 5 6 7 8 9 10 11 12
2 6 3 3 4 4 0 1 9 0

FRED R. DENNEY PROFESSIONAL ENGINEER AND LAND SURVEYOR NO. 1962 NEW MEXICO

Record Drawings Were Done By Fred Denney & Assoc.

RECORD DRAWING
Date: 9-26-89

REV.	SHEETS	CITY ENGINEER	DATE	USER DEPT.	DATE	USER DEPT.	DATE
1	1,3,4,7						

APPROVAL OF REVISIONS

RAYMOND PANG NEW MEXICO 9889 REGISTERED PROFESSIONAL ENGINEER
11-10-88

CITY OF ALBUQUERQUE

APPROVED FOR CONSTRUCTION
CITY ENGINEER 11/30/88

DRAWING NO. 3344

SHEET 1 OF 16

GENERAL NOTES

1. ALL WORK DETAILED ON THESE PLANS TO BE PERFORMED UNDER CONTRACT SHALL, EXCEPT AS OTHERWISE NOTED OR PROVIDED FOR HEREON, BE CONSTRUCTED IN ACCORDANCE WITH THE CITY OF ALBUQUERQUE STANDARD SPECIFICATIONS - PUBLIC WORKS CONSTRUCTION - 1986.

2. TWO (2) WORKING DAYS PRIOR TO ANY EXCAVATION, CONTRACTOR MUST CONTACT LINE LOCATING SERVICE, 765-1234, FOR LOCATION OF EXISTING UTILITIES.

3. UTILITIES LOCATIONS AS SHOWN ON THESE DRAWINGS ARE APPROXIMATE. IT IS POSSIBLE THAT THE EXACT LOCATION OF LINES AND UTILITY CONNECTION POINTS IN THE IMMEDIATE VICINITY OF THE PROPOSED SITE MAY BE SLIGHTLY DIFFERENT FROM THE LOCATION SHOWN ON THIS DRAWINGS. PRIOR TO CONSTRUCTION, THE CONTRACTOR SHALL EXCAVATE AND VERIFY THE HORIZONTAL AND VERTICAL LOCATIONS OF ALL EXISTING UTILITIES. SHOULD A CONFLICT EXIST, THE CONTRACTOR SHALL NOTIFY THE ENGINEER SO THAT THE CONFLICT CAN BE RESOLVED WITH A MINIMUM AMOUNT OF DELAY.

4. THE CONTRACTOR SHALL MAINTAIN ACCESS TO ADJACENT PROPERTIES DURING CONSTRUCTION.

5. ALL WORK ON THIS PROJECT SHALL BE PERFORMED IN ACCORDANCE WITH APPLICABLE FEDERAL, STATE AND LOCAL LAWS, RULES AND REGULATIONS CONCERNING CONSTRUCTION SAFETY AND HEALTH.

6. THE CONTRACTOR MUST SUBMIT A CONSTRUCTION SIGNING AND BARRICADING PLAN TO TRAFFIC ENGINEERING FOR A BARRICADING PERMIT 48 HOURS PRIOR TO COMMENCEMENT OF CONSTRUCTION.

7. ALL PROPOSED UTILITIES LINES SHALL BE INSTALLED PRIOR TO PAVING EXCEPT TEMPORARY PAVING AND ASPHALT BERMS FOR TRAFFIC DETOURING AND CONSTRUCTION DRAINAGE AS SHOWN ON SHEET NO.'S 3, 10 AND 11.

8. BACKFILL & COMPACTION SHALL BE ACCORDING TO BACKFILL AND BEDDING DETAILS AS SHOWN ON SHEET NO. 8.

9. TACK COAT REQUIREMENTS SHALL BE DETERMINED BY THE CITY ENGINEER.

10. IF CURB IS DEPRESSED FOR A DRIVEPAD OR A HANDICAP RAMP, THE DRIVEPAD OR RAMP SHALL BE CONSTRUCTED PRIOR TO ACCEPTANCE OF THE CURB AND GUTTER.

11. SIDEWALKS AND WHEELCHAIR RAMPS SHALL BE CONSTRUCTED WHEREVER AND A NEW CURB RETURN IS CONSTRUCTED.

12. ALL STATIONING SHALL BE BASED ON CONSTRUCTION CENTERLINE EXCEPT AS NOTED OTHERWISE HEREON.

13. PAINTING FOR TRAFFIC STRIPING SHALL BE CONDUCTED BY OWNER.

14. THE CONTRACTOR SHALL BE RESPONSIBLE FOR PROTECTING, SUPPORTING AND MAINTAINING IN SERVICE ALL EXISTING UTILITIES. ANY DAMAGE TO UTILITIES OR SERVICES LINES THAT DO NOT REQUIRE RELOCATION BY THE CONTRACTOR SHALL BE REMOVED AND REPLACED AT THE CONTRACTOR'S EXPENSE. THIS EXPENSE SHALL BE CONSIDERED INCIDENTAL TO THE PROJECT AND NO SEPARATE PAYMENT WILL BE MADE. GRANTING OF ADDITIONAL WORK DAYS UNDER THIS SITUATION MIGHT NOT BE ALLOWED AND SHALL BE AT THE DISCRETION OF THE ENGINEER.

15. CHANGES IN PIPELINE LAY-OUT DETERMINED NECESSARY TO CONFORM TO FIELD CONDITIONS MAY REQUIRE ADDITIONAL MATERIALS NOT INDICATED ON THIS PLAN. ALL CHANGES SHALL BE APPROVED BY THE ENGINEER.

16. ONLY WATER SYSTEMS DIVISION PERSONNEL ARE AUTHORIZED TO OPERATE EXISTING VALVES, FIRE HYDRANTS, ETC. THREE (3) FULL WORKING DAYS PRIOR TO PROPOSED WORK SHUT OFFS, CONTRACTOR SHALL CONTACT AND COORDINATE WITH THE DIVISION PERSONNEL AT 823-4200.

17. STATIONING SHOWN ON THE DRAWINGS IS TO PROVIDE GENERAL GUIDANCE AS TO OVERALL INTENT OF HORIZONTAL/VERTICAL ALIGNMENT OF WATERLINES. ADJUSTMENTS TO INDICATED LAYOUT MAY BE REQUIRED TO SUIT FIELD CONDITIONS. CONTRACTOR SHALL PROVIDE PROVISION IN UNIT PRICES BID FOR FIELD ADJUSTMENTS. NO SEPARATE PAYMENT SHALL BE MADE IN THIS REGARD.

18. CONTRACTOR SHALL SCHEDULE SUBMITTAL OF FIVE (5) COPIES OF SHOP DRAWINGS TO ALLOW A THREE WEEK REVIEW TIME BY THE ENGINEER.

19. INSTALLATION AND REMOVAL OF TEMPORARY ASPHALT PAVING, ASPHALT BERMS AND 6 FEET TEMPORARY CHAINLINK FENCE AS DEPICTED ON SHEET NO.'S 11 AND 12-CONSTRUCTION TRAFFIC CONTROL, SHALL BE CONSIDERED INCIDENTAL TO CONSTRUCTION TRAFFIC CONTROL AND NO SEPARATE PAYMENT SHALL BE MADE THEREOF.

20. THE FOLLOWING LAYING CONDITION AND SOIL (SANDY SILT) PARAMETERS WERE USED IN THE COMPUTATION OF PIPE RESTRAINING FOR THE PROPOSED DIP WATERLINES:

RATIO OF PIPE FRICTION ANGLE TO SOIL FRICTION ANGLE	= 0.50
RATIO OF PIPE COHESION TO SOIL COHESION	= 0.00
INTERNAL PRESSURE 18" WATERLINE	= 50 PSI
INTERNAL PRESSURE 10" WATERLINE	= 100 PSI
SOIL INTERNAL FRICTION ANGLE	= 30 DEGREES
BACKFILL SOIL DENSITY	= 90 PCF
SOIL COHESION	= 0 PSF
SAFETY FACTOR	= 1.5

IF HIGH GROUND WATER OR POOR SOIL CONDITIONS ARE ENCOUNTERED, CONTRACTOR SHALL NOTIFY THE ENGINEER TO DETERMINE MODIFICATIONS TO PIPE RESTRAINING.

21. THE CONTRACTOR SHALL COORDINATE REQUIRED UTILITY RELOCATIONS VIA THE FOLLOWING INDIVIDUALS:
PUBLIC SERVICE COMPANY OF NEW MEXICO - JIM VANN 761-3426
TELEPHONE - JOYCE ELLIOTT 765-8787
CABLE T.V. - YVETTE SUAZO-TUCKER 761-6200
GAS COMPANY OF NEW MEXICO - ANITA RATHER 889-2533

22. CONTRACTOR SHALL ADVISE THE TELEPHONE COMPANY PER NOTE 21 ABOVE AFTER EXPOSING EXISTING TELEPHONE CONDUIT AT CONCORDA FOR THEIR INSPECTION. CONTRACTOR SHALL ALSO ADVICE THE TELEPHONE COMPANY OF CONSTRUCTION SCHEDULE IN ORDER TO ALLOW THEIR ENCASEMENT OF SAID CABLE.

COMPOSITE UTILITY PLAN

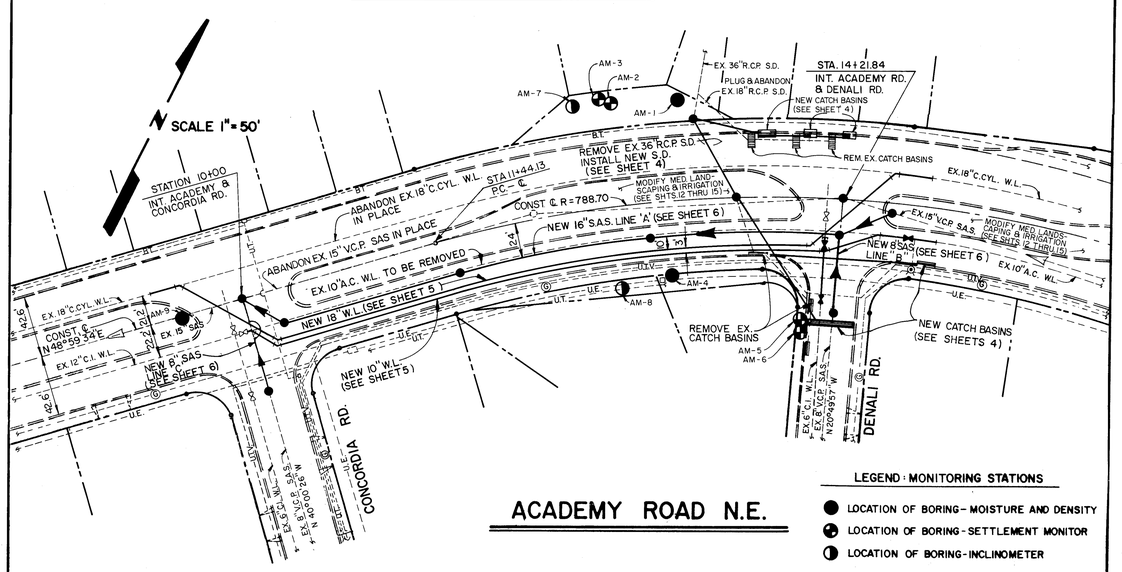

LEGEND: MONITORING STATIONS

- LOCATION OF BORING - MOISTURE AND DENSITY
- LOCATION OF BORING - SETTLEMENT MONITOR
- LOCATION OF BORING - INCLINOMETER

SURVEY SERVICES

1. The Contractor's attention is directed to Section 9 of the Special Provisions in regards to Construction Survey and Emergency Survey.

2. Record data including stations, offsets and elevations for all proposed pipe settlement gauges shall be submitted to the owner within two weeks of substantial completion of each utility line detailed for this contract. This work shall be incidental to construction surveying and flo separate payment shall be made thereof.

3. All elevations shown on these plans should be adjusted by a value of negative 0.035.

4. For the Contractor's information, design survey was performed by:
Santiago Romero Jr. & Associates
6139 Edith Blvd. N.E.
Albuquerque, New Mexico 87107
(505) 345-2733

SPECIAL SITE CONDITIONS AND PRECAUTIONS

1. Soil borings of the project site indicates the presence of collapsible soils. Due to the sensitive nature of collapsible soils to water, it is critical that the migration of water from the project site to adjacent residential areas be eliminated. The following precautions must be observed by the Contractor:

   A. Proposed construction drainage concept and construction sequence as depicted on Sheets 3 and 4 shall be adhered to by the Contractor. No commencement of waterline and sanitary sewer excavation will be allowed unless all required drainage items as shown on Sheet 4 have been constructed and accepted for proper functioning by the Engineer.

   B. The Contractor shall be responsible to ensure and maintain the proper functioning of the storm drainage system at all times throughout this contract including weekends and holidays. The owner shall not be held liable for any damage caused directly or indirectly resulting from the malfunctioning and/or failure of the storm drain system. This work shall be considered incidental to the various storm drainage items.

   C. The Contractor shall follow closely the proposed sequence of construction as detailed on these plans. Proposed deviations in this regard must be submitted to the Engineer for approval.

   D. A detailed construction schedule for each phase of work shall be submitted to the Engineer for review two (2) working days prior to the scheduled pre-construction meeting.

   E. Open trenches longer then fifty (50) feet along pipe centerline shall not be allowed at any time. It shall be the Contractor's responsibility to maintain that no open trenches be subjected to water ponding at all times. The Contractor's attention is directed to Section 701.17.7 of the Supplemental Technical Specifications in regards to Trench Dewatering.

STORM DRAIN NOTES

1. All proposed storm drain lines shall be PVC ribbed drain pipes manufactured in conformance with AASHTO 18.4.3.2.1. Refer to Supplemental Technical Specifications for specific requirements.

2. Storm drain system shall be protected and maintained throughout Phase I and Phase II of utility installations.

3. Due to soil settlement in the project site area, it is a concern for the integrity of the existing 18 inch concrete cylinder well collector line especially where the existing 36 inch RCP storm drain crosses over. This location is approximately 21.1 feet left of Construction Centerline Station 13+38 as shown on Sheet No. 4. During construction of the proposed storm drain, the Contractor shall pothole at this location to expose the existing 18" concrete cylinder line for the Engineer's inspection.

4. Prior to acceptance of all proposed storm drain lines detailed on these drawings, a satisfactory air test shall be conducted in accordance with Section 901.7.4.2 of the Standard Specifications using a test pressure of 10 psig.

WATER LINE AND SANITARY SEWER NOTES

1. All new waterline and sanitary sewer lines detailed on these drawings shall be constructed of "TR FLEX" Restrained Joint, Class 50, Ductile Iron Pipe and Fittings manufactured by U.S. Pipe and Foundary Company, Birmingham, Alabama or approved equal.

2. All field cuts made to TR-FLEX type D.I.P. shall be done in accordance to manufacturer's recommendations and shall be restrained with the TR-FLEX gripper rings or approved equal.

3. All TR-FLEX type D.I.P. sockets shall be fully extended after installation of each segment prior to initial backfill. This shall be accomplished by pulling the pipe through the casing.

4. Polyethylene encasement shall be used for all proposed waterlines and sanitary sewers in accordance with AWWA C-105.

5. Interior of all pipe shall be blasted, primed, and cement mortar lined according to AWWA C-104.

6. Complete shop drawings and notes shall be submitted to the Engineer for review prior to fabrication. As a minimum, shop drawings for the following item shall be provided:

   Transition for 18" inch concrete cylinder to D.I.P. water line:

   A. Station 9+40 - 21.1 feet Lt.
   B. Station 14+85 - 21.1 feet Lt.

7. Flexible Expansion Joints (F.E.J.) detailed on these plans shall be as manufactured by EBAA Iron or approved equal. The contractor's attention is directed to the Supplemental Technical Specifications for specific requirements.

8. The Contractor's attention is directed to the Supplemental Technical Specifications for leakage test requirements on D.I.P. water lines.

9. Polyvinylchloride (PVC) trench liners as depicted on these plans shall be as manufactured by Palco or approved equal and shall conform to all requirements as stipulated in the Supplemental Technical Specifications.

10. When construction should disrupt sewage flows in existing sewer facilities, sewage shall be conveyed in closed by-pass conduits and disposed of in a sanitary sewer system. Sewage shall not be permitted to flow in trenches or be covered by backfill.

PROTECTION OF MONITORING STATIONS

All monitoring stations as shown on the Composite Utility Plan and as described below shall be protected by the Contractor throughout the duration of this contract. All costs in the replacement and data re-establishment for any damaged monitoring station shall be borne by the Contractor. In such an event, the owner shall secure the services of the geotechnical firm performing the monitoring services and cause the proper replacement and re-establishment of data for each damaged monitoring station. All costs thus incurred by the owner shall be deducted from the monthly progress payment due Contractor. Protection of monitoring stations shall be incidental to various bid items in this contract.

MONITORING STATION	TYPE DESCRIPTION	CENTERING STATION	OFFSET (FEET)	ELEVATION
AM-1	Moisture & Density	13+13.51	65.20'LT.	5606.08
AM-2	Settlement	12+70.33	71.32'LT.	5604.99
AM-3	Settlement	12+67.14	72.44'LT.	5605.01
AM-4	Moisture & Density	13+14.67	53.58'RT.	5605.98
AM-5	Settlement	14+01.07	81.85'RT.	5609.64
AM-6	Settlement	14+01.05	85.67'RT.	5609.76
AM-7	Inclinometer	12+49.16	70.18'LT.	5604.21
AM-8	Inclinometer	12+71.39	55.49'RT.	5605.45
AM-9	Moisture & Density	9+62.96	02.97'RT.	5598.55

Contract Work Hours
26 3344 0290

RECORD DRAWING
Date: 9-26-89

AS BUILT INFORMATION
CONTRACTOR Aztec Underground
WORK STAKED BY
INSPECTOR'S ACCEPTANCE BY S. Moya DATE n/a
VERIFICATION BY DATE
DRAWINGS CORRECTED BY DATE
MICRO-FILM INFORMATION
RECORDED BY DATE
NO

BENCH MARKS
ACS 8-E21 ELEV. 5702.26
Bench mark station is marked on a 3 1/4" aluminum cap and is located at the north top of curb of Academy Rd. N.E. approximately 375' feet west of Eubank Blvd.
Note:
All elevations shown on plan & profile shall be adjusted by a value of -0.035.

SURVEY INFORMATION
FIELD NOTES

NO.	BY	DATE
PS-52	D. Kramer	Nov. 1987

ENGINEER'S SEAL

NO.	DATE	REMARKS	BY
		REVISIONS	

DESIGN
DESIGNED BY Ray Fang DATE June 1988
DRAWN BY A. Gallegos DATE June 1988
CHECKED BY Ray Fang DATE June 1988

CITY OF ALBUQUERQUE
PUBLIC WORKS DEPARTMENT
ENGINEERING GROUP

TITLE: ACADEMY RD. WATER, SAS & DRAINAGE REHABILITATION
CONCORDIA RD. TO DENALI RD.
GENERAL NOTES, SPECIAL NOTES, SUGGESTED CONSTRUCTION SEQUENCE AND UTILITY COMPOSITE PLAN

APPROVALS	ENGINEER	DATE	APPROVALS	ENGINEER	DATE
D.R.C. Chair		11/18/88			
Trans. Dev.		" " "			
Utility Dev.		11/16/88			
Hydrology		11/21/88			

DRAWING NO. 3344 | MAP NO. E-21 | SHEET 2 OF 16

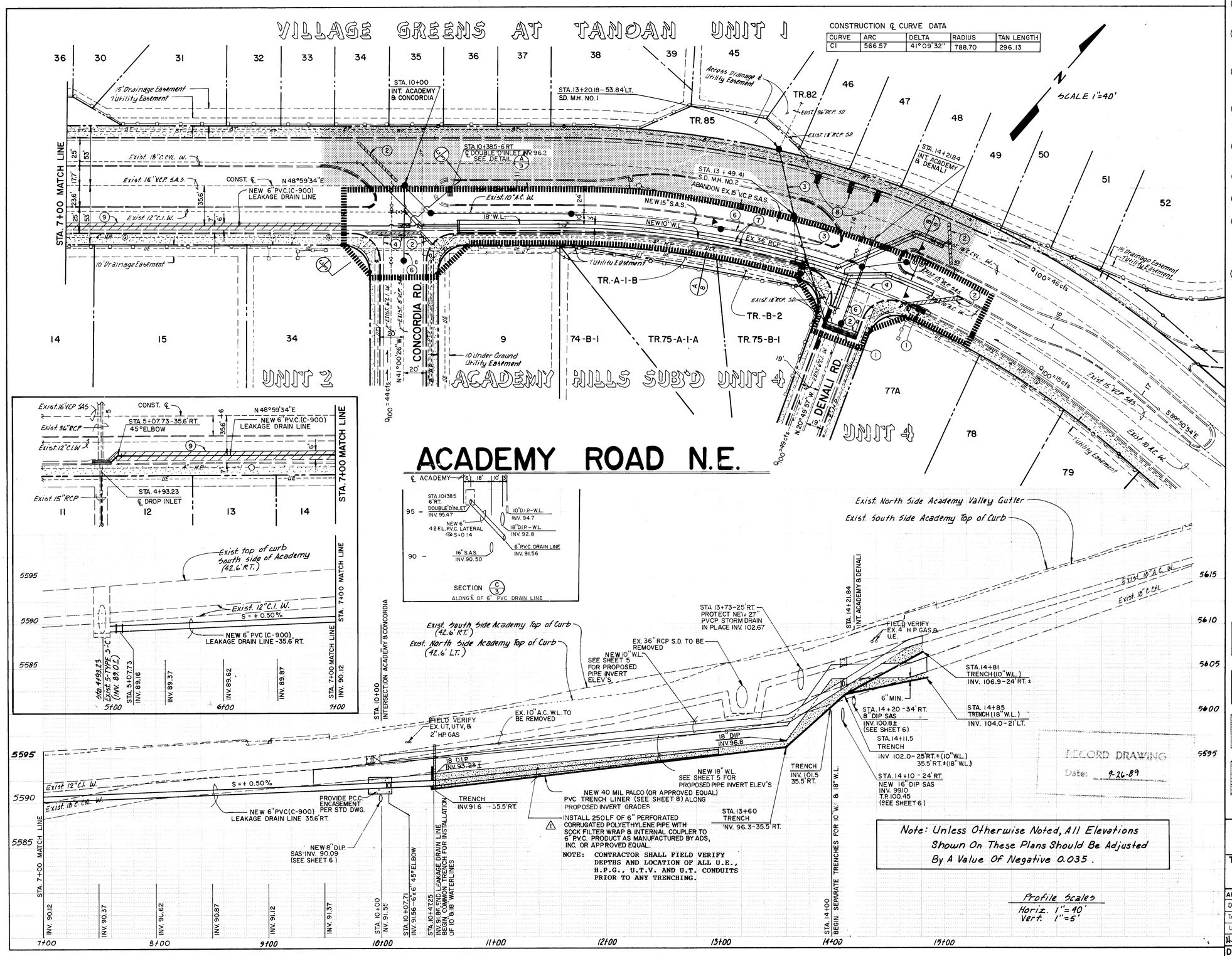

CONSTRUCTION ℄ CURVE DATA

CURVE	ARC	DELTA	RADIUS	TAN LENGTH
C1	566.57	41°09'32"	788.70	296.13

CONSTRUCTION NOTES

1. * CONSTRUCT DROP INLET(S) PER SHEET 4 PRIOR TO TRENCHING FOR WATERLINE AND SAS INSTALLATION.
2. * CONSTRUCT TEMPORARY ASPHALT BERM PER DETAIL ON SHEET NO. 4 TO BE MAINTAINED UNTIL COMPLETION OF BACKFILL AND COMPACTION OF SUBGRADE FOR EACH PHASE.
3. * CONSTRUCT STORM DRAIN LINE AND NEW MANHOLE PER SHEET 4 PRIOR TO TRENCHING FOR PHASE I WATERLINE AND SAS INSTALLATION.
4. MAINTAIN EXISTING PCC VALLEY GUTTER UNTIL THE COMPLETION OF BACKFILL TO PAVING SUBGRADE OF ALL WATERLINE AND SAS TRENCHES IN PHASE I.
5. INSTALL PCC HEADWALL FOR WATERLINE LEAKAGE DRAIN SYSTEM PER THIS SHEET AND DETAILS ON SHEET NO. 8.
6. CONSTRUCT 15" AND 8" SANITARY SEWER LINE PER SHEET NO. 6 AND SHEET NO. 8.
7. CONSTRUCT 10" AND 18" DIP WATERLINE(S) PER SHEET NO. 7 AND SHEET NO. 8.
8. MAINTAIN OPERATION OF EXISTING STORM INLETS AT STATIONS 13+59.55, 13+63.88 AND 13+89.48 - 42 FEET LEFT UNTIL THE COMPLETION OF BACKFILL TO PAVING SUBGRADE OF PHASE II WATERLINE INSTALLATION.
9. REMOVE AND REPLACE ARTERIAL PAVING PER SHEET 9.

* THESE ITEMS OF WORK SHALL BE COMPLETED AND FUNCTIONAL PRIOR TO ANY TRENCHING FOR WATERLINE OR SAS INSTALLATION.

STORM DRAINAGE NOTES:

A ALL 100-YEAR FLOWS (Q100) AS DELINEATED HEREON ARE EXTRACTED FROM "DRAINAGE REPORT FOR THE CHAMPIONS AT TANOAN" CONDUCTED BY GREINER ENGINEERING, INC., SEPTEMBER 1986.

B IT SHALL BE THE CONTRACTORS RESPONSIBILITY TO ENSURE THAT NO PONDING BE ALLOWED IN ANY OF THE EXCAVATED TRENCHES AT ALL TIMES.

LEGEND

- PVC WATERLINE TRENCH LINER
- PHASE I
- PHASE II
- SAND BEDDING

AS BUILT INFORMATION
CONTRACTOR Albuquerque Underground
WORK STAKED BY
DATE
FIELD CHECKED BY
ACCEPTANCE BY S. Maya DATE 11/30
FIELD VERIFICATION
DATE
DRAWINGS CORRECTED BY
DATE
MICRO-FILM INFORMATION
RECORDED BY
DATE
NO

BENCH MARKS
ACS 8-R21 ELEV. 5702.26
Bench mark station is marked on 3 1/4" aluminum cap and is located at the north top of curb of Academy Rd. N.E. approximately 375' feet west of Eubank Blvd.
Note:
All elevations shown on plan & profile shall be adjusted by a value of -0.035.

SURVEY INFORMATION
FIELD NOTES

NO.	BY	DATE
09-92	D. Kramer	Aug 1987

ENGINEER'S SEAL
NEW MEXICO PROFESSIONAL ENGINEER
11-10-88

NO.	DATE	REMARKS	BY
3	3-27-89	ADD PERFORATED POLYETHYLENE TUBING	R.P.

REVISIONS
DESIGN
DESIGNED BY Ray Pang DATE October 1987
DRAWN BY A. Salas DATE October 1987
CHECKED BY Ray Pang DATE October 1987

CITY OF ALBUQUERQUE
PUBLIC WORKS DEPARTMENT
ENGINEERING DIVISION

TITLE: ACADEMY RD WATER, SAS & DRAINAGE REHABILITATION
CONCORDIA RD. TO DENALI RD.
WATERLINE LEAKAGE DRAIN SYSTEM
CONSTRUCTION DRAINAGE

APPROVALS	ENGINEER	DATE	APPROVALS	ENGINEER	DATE
D.R.C. Chair		11/18/88			
Trans. Dev.					
Utility Dev.		11/16/88			
Hydrology	Ray Pang	10-21-88			

DRAWING NO.	MAP NO.	SHEET	OF
3344	E-21	3	16

3344

STORM DRAIN CONSTRUCTION NOTES

1. * REMOVE EXISTING MANHOLE AND INSTALL NEW 6' DIAMETER TYPE 'C' MANHOLE.
2. * REMOVE EXISTING 36" RCP AND INSTALL PROPOSED PVCP STORM DRAIN PER PLAN AND PROFILE.
3. * EXPOSE EXISTING 18" CCY WELL COLLECTOR LINE FOR DAMAGE INSPECTION BY WATER OPERATIONS. CONTRACTOR SHALL COORDINATE THIS WORK WITH CONSTRUCTION ENGINEER.
4. * MAINTAIN OPERATION OF EXISTING INLETS AND LATERAL UNTIL COMPLETION OF PROPOSED STORM DRAIN SYSTEM.
5. * CONSTRUCT FULL-WIDTH STORM INLET PER DETAILS HEREON.
6. * INSTALL 93 LF OF 27" PVCP STORM CONNECTOR AT S = 0.05.
7. * INSTALL STORM INLETS, GUTTER TRANSITION AND 18" PVCP CONNECTOR AS SHOWN AND PER STANDARD DRAWING NUMBER'S 2201, 2205 AND 2207.
8. * CUT AND CAP EXISTING 6" FIRE HYDRANT LATERAL.
9. * RELOCATE EXISTING FIRE HYDRANT AND STREET LIGHT PER SHEET 6 AND 7 RESPECTIVELY.
10. * MAINTAIN OPERATION OF EXISTING STORM INLETS AND CONNECTORS UNTIL COMPLETION OF PHASE II UTILITY INSTALLATION.
11. * INSTALL 45 L.F. OF 27" PVCP AT S = 0.0062 STORM LATERAL TO MANHOLE NO. 1 WITH. TEMPORARY PLUG UNTIL CONNECTION TO NEW STORM INLET (STATION 13+70 - 41.6' LT.) TO BE INSTALLED AFTER COMPLETION OF PHASE II UTILITY INSTALLATION.
12. CONSTRUCT NEW STORM INLETS, GUTTER TRANSITION AND 18" RIBBED PVCP CONNECTOR AS SHOWN AND PER STANDARD DRAWINGS 2201, 2205 AND 2207. THIS WORK SHALL BE DONE IN CONJUNCTION WITH PAVING WORK AFTER COMPLETION OF PHASE II UTILITY INSTALLATION.
13. INSTALL 36 L.F. OF 8" C-900 PVC LEAKAGE DRAIN LINE AT S=0.030 TO NEW STORM INLET (STATION 14+20-41.6'LT.) WITH TEMPORARY PLUG UNTIL CONNECTION TO MEDIAN DOUBLE-D INLET (STATION 14+66.5-6'RT.). 68'
14. ABANDON AND SEAL EXISTING 18" RCP WITH BRICK AND MORTAR AFTER REMOVAL OF EXISTING INLETS UPON COMPLETION OF PHASE II UTILITY INSTALLATION.

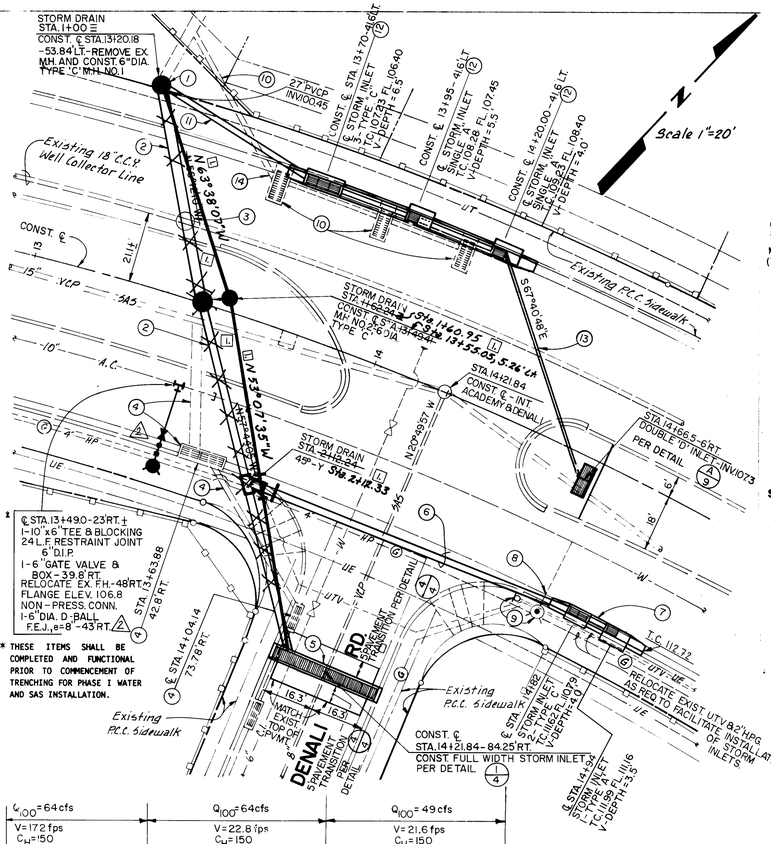

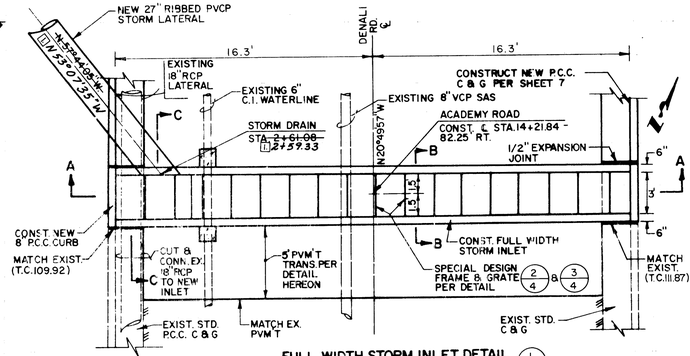

FULL WIDTH STORM INLET DETAIL 1/4
SCALE: 1" = 5'

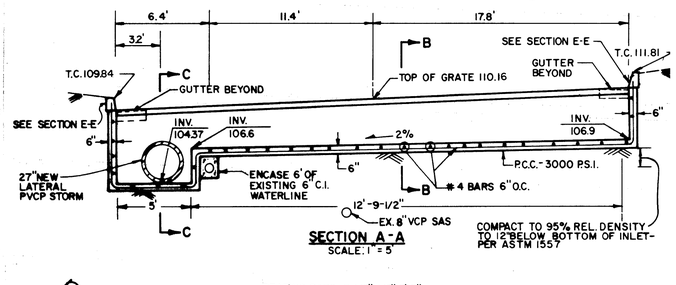

SECTION A-A
SCALE: 1" = 5'

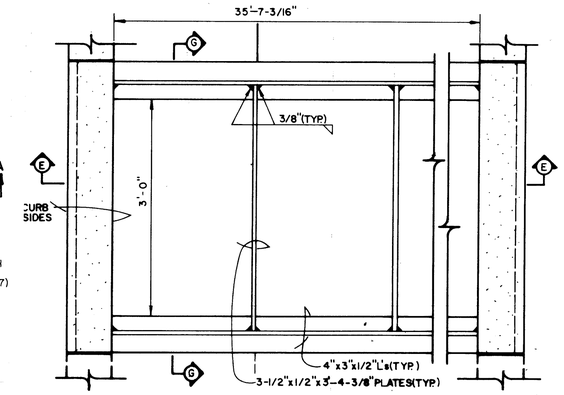

STORM INLET FRAME DETAIL 2/4
SCALE 1" = 1'

NOTE: CONSTRUCT FRAME AND GRATES TO DIMENSIONS SHOWN. ALL OTHER DIMENSIONS, DETAILS AND CONSTRUCTION NOTES SHALL BE PER STD. DWG. 2216 AND 2220.

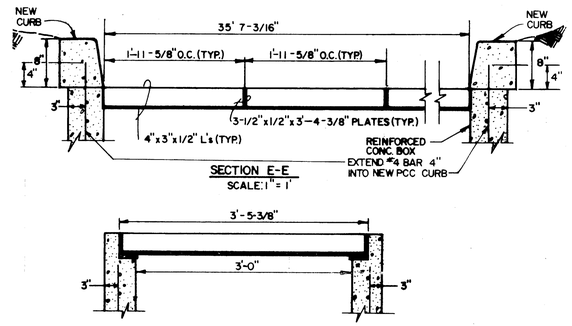

SECTION E-E
SCALE: 1" = 1'

SECTION G-G
SCALE: 1" = 1'

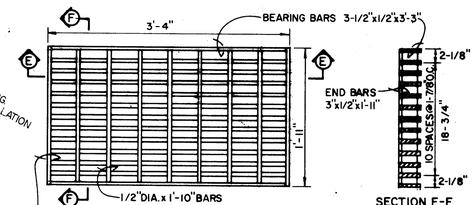

STORM INLET GRATE DETAIL 3/4
SCALE 1" = 1'

SECTION F-F
SCALE 1" = 1'

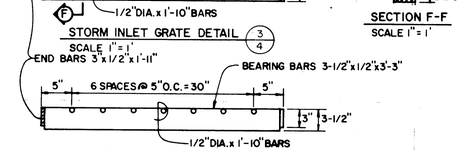

SECTION E-E
SCALE 1" = 1'

TRAFFIC CONTROL NOTE

DURING INSTALLATION OF THE PROPOSED 30" PVCP STORM SEWER BETWEEN MANHOLE NO. 1 AND MANHOLE NO. 2, A MINIMUM OF ONE WEST BOUND LANE MUST BE MAINTAINED OPEN AT ALL TIMES. A 400 FEET TAPER ON EACH SIDE OF THE WORK AREA DELINEATED BY LIGHTED BARRELS SHALL BE REQUIRED.

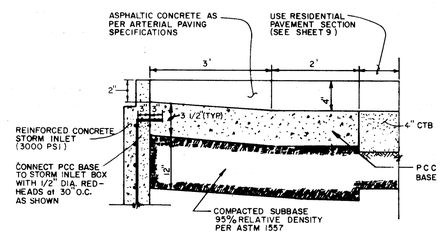

PAVEMENT TRANSITION DETAIL 4/4
N.T.S.

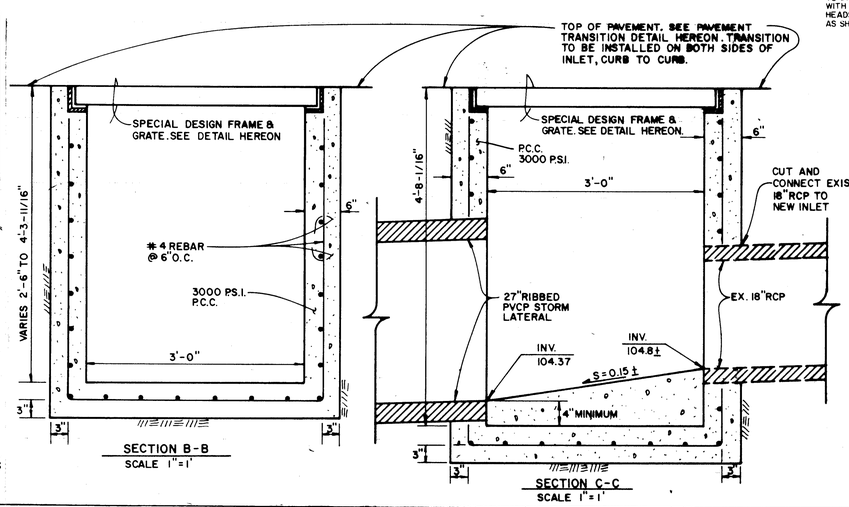

SECTION B-B
SCALE 1" = 1'

SECTION C-C
SCALE 1" = 1'

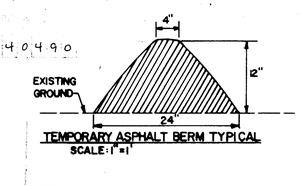

TEMPORARY ASPHALT BERM TYPICAL
SCALE: 1" = 1'

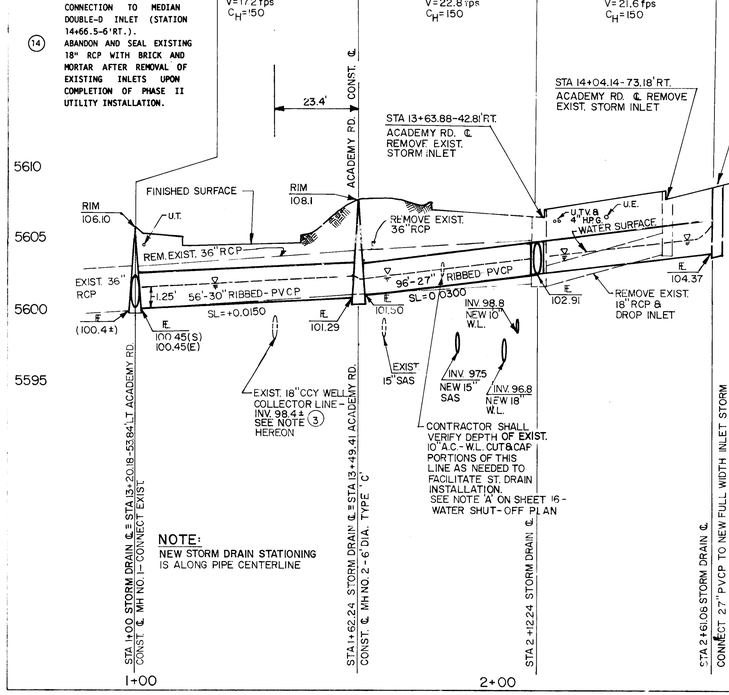

NOTE:
NEW STORM DRAIN STATIONING IS ALONG PIPE CENTERLINE

PIPE SETTLEMENT GAUGE INSTALLATION

INSTALL PIPE SETTLEMENT GAUGE PER DETAILS ON SHEET 7 AT THE FOLLOWING LOCATIONS:

STORM DRAIN LINE

STORM DRAIN STATION	OFFSET (FEET)	POST ** CONSTRUCTION ELEVATION
1 ~~1+50 - 1+13~~	0	1 04.62
1 ~~2+00 - 1+75.25~~	0	1 06.64

** POST CONSTRUCTION STATIONS AND ELEVATIONS SHALL BE ESTABLISHED AND CERTIFIED BY A LICENSED SURVEYOR WITHIN TWO WEEKS OF SUBSTANTIAL COMPLETION OF THE NEW LINES BY THE ENGINEER. THIS WORK SHALL BE INCIDENTAL TO CONSTRUCTION SURVEYING.

PROFILE
HORIZONTAL SCALE: 1" = 20'
VERTICAL SCALE: 1" = 5'

NOTE:
CONTRACTOR SHALL FIELD VERIFY DEPTHS AND LOCATION OF ALL U.E., H.P.G., U.T.V. AND U.T. CONDUITS PRIOR TO ANY TRENCHING.

Note: Unless Otherwise Noted, All Elevations Shown On These Plans Should Be Adjusted By A Value Of Negative 0.035.

AS BUILT INFORMATION
Albuq. Underground
S. Tafoya 11/90
MIKE MARTINEZ INFORMATION

BENCH MARKS
ACS 8-B21 ELEV. 5702.26
Bench mark station is marked on 3 1/4" aluminum cap and is located at the north top of curb of Academy Rd. N.E. approximately 375' feet west of Eubank Blvd.
Note:
All elevations shown on plan & profile shall be adjusted by a value of -0.035.

SURVEY INFORMATION
FIELD NOTES
NO. 95-52 BY D. Kramer DATE Sep. 1987

ENGINEER'S SEAL
NEW MEXICO PROFESSIONAL ENGINEER
11-10-88

NO.	REMARKS	BY	DATE
1	3-27-89 ADD F.E.I. TO F.H. LEG	R.P.	August 1988
2	9/14/89 Record Drawing	E.L.D.	August 1988
3			September 1988

REVISIONS
LF SIGN
Ray Pang
Alls/AUD/PH/U.F.
Ray Pang

RECORD DRAWING
Date 9-26-89

CITY OF ALBUQUERQUE
PUBLIC WORKS DIVISION

TITLE ACADEMY RD: WATER, SAS & DRAINAGE REHABILITATION
CONCORDIA RD. TO DENALI RD.
PLAN AND PROFILE-STORM DRAINAGE
STA. 1+00 TO STA. 2+61.08

11/8/88
11/16/88
Hydrology 10-21-88

DRAWING NO.	MAP NO.	SHEET	OF
3344	E-21	4	16

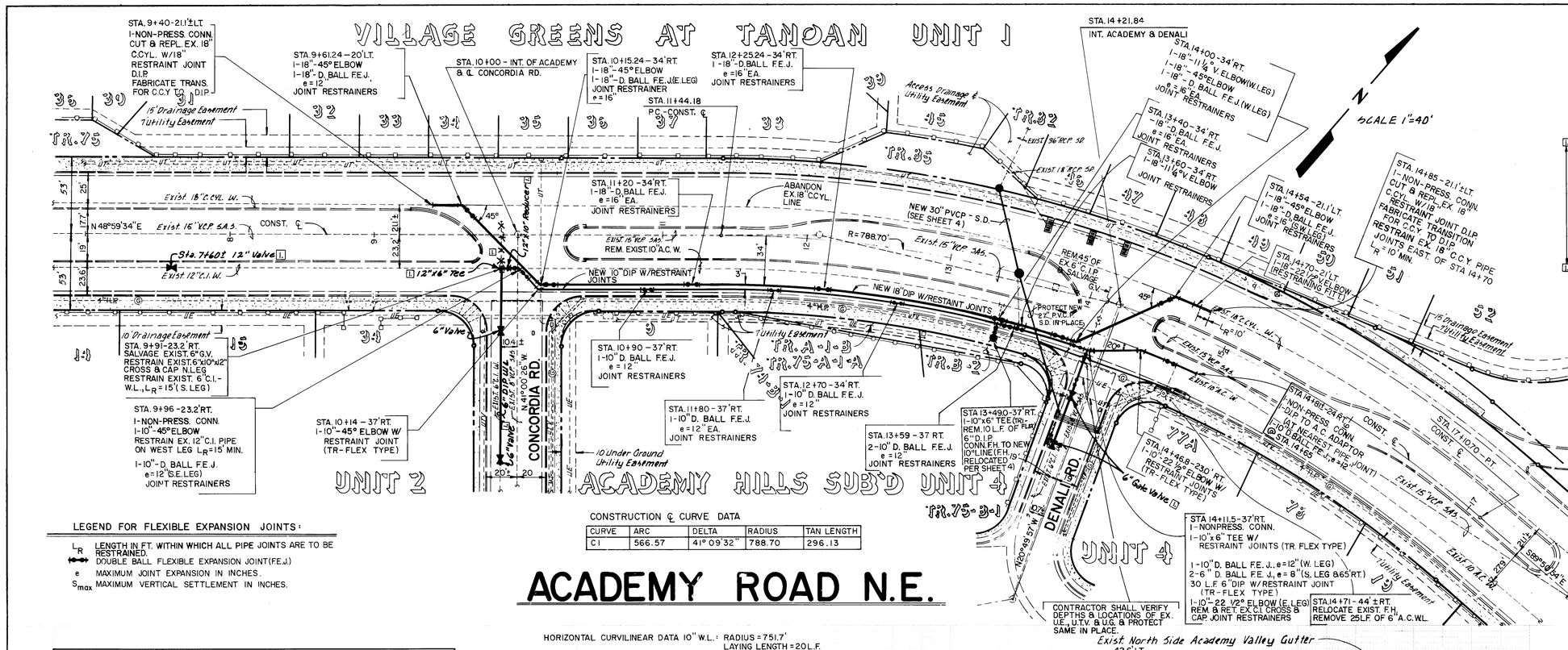

PIPE SETTLEMENT GAUGE INSTALLATION

INSTALL PIPE SETTLEMENT GAUGE PER DETAILS ON SHEET 7 AT THE FOLLOWING LOCATIONS:

10" DIP WATERLINE (ACADEMY RD.)

CONSTRUCTION CENTERLINE STATION	OFFSET (FEET)	POST # CONSTRUCTION ELEVATION
~~10+06~~ 10+12.85	31.44 ~~33.2~~' RT.	96.96
~~11+05~~ 11+04.12	36.96 ~~37~~' RT.	97.88
~~12+00~~ 11+98.16	37.08 ~~37~~' RT.	00.52
~~12+90~~ 12+91.25	36.84 ~~37~~' RT.	03.28
~~13+65~~ 13+68.07	36.80 ~~37~~' RT.	05.27
~~13+80~~ 13+81.83	36.55 ~~37~~' RT.	06.76
~~14+17~~ 14+17.44	35.74 ~~23.5~~' RT.	08.24
~~14+56~~ 14+58.24	29.49 ~~24~~' RT.	09.26

18" DIP WELL COLLECTOR LINE (ACADEMY RD.)

CONSTRUCTION CENTERLINE STATION	OFFSET (FEET)	POST # CONSTRUCTION ELEVATION
~~9+50~~ 9+56.00	20.61 ~~21.1~~' LT.	95.61
~~9+71.24~~ 9+72.27	9.35 ~~11.1~~' LT.	95.76
~~10+10.24~~ 10+07.63	30.46 ~~29~~' RT.	96.81
~~10+90~~ 10+88.46	33.86 ~~34~~' RT.	97.91
~~11+50~~ 11+50.73	33.96 ~~34~~' RT.	99.36
~~12+00~~ 11+98.59	34.08 ~~34~~' RT.	00.20
~~12+50~~ 12+49.25	34.19 ~~34~~' RT.	01.09
~~13+20~~ 13+21.30	34.00 ~~34~~' RT.	03.54
~~13+65~~ 13+68.03	33.50 ~~34~~' RT.	05.84
~~14+05~~ 14+04.75	29.47 ~~29~~' RT.	07.28
~~14+27~~ 14+30.60	2.96 ~~6.45~~' RT.	08.54
~~14+44~~ 14+40.78	7.62 ~~11.1~~' LT.	08.38
~~14+60~~ 14+55.36	17.88 ~~21.1~~' LT.	08.44

8" DIP WATERLINE (DENALI RD.)

CONSTRUCTION CENTERLINE STATION	OFFSET (FEET)	POST # CONSTRUCTION ELEVATION
~~14+11.5~~ 14+11.05	19.41 ~~50~~' RT.	08.01

* POST CONSTRUCTION STATIONS AND ELEVATIONS SHALL BE ESTABLISHED AND CERTIFIED BY A LICENSED SURVEYOR WITHIN TWO WEEKS OF SUBSTANTIAL COMPLETION OF THE NEW LINES BY THE ENGINEER. THIS WORK SHALL BE INCIDENTAL TO CONSTRUCTION SURVEYING.

C of A PWD Maps & Records
26 33 44 05 90

RECORD DRAWING
Date: 9-26-89

LEGEND FOR FLEXIBLE EXPANSION JOINTS:

- L_R — LENGTH IN FT. WITHIN WHICH ALL PIPE JOINTS ARE TO BE RESTRAINED.
- DOUBLE BALL FLEXIBLE EXPANSION JOINT (F.E.J.)
- e — MAXIMUM JOINT EXPANSION IN INCHES.
- S_{max} — MAXIMUM VERTICAL SETTLEMENT IN INCHES.

CONSTRUCTION ℄ CURVE DATA

CURVE	ARC	DELTA	RADIUS	TAN LENGTH
C1	566.57	41° 09' 32"	788.70	296.13

ACADEMY ROAD N.E.

HORIZONTAL CURVILINEAR DATA 10" W.L.: RADIUS = 751.7' LAYING LENGTH = 20 L.F. DEFLECTION = 1.5° MAX. (PER JOINT)

HORIZONTAL CURVILINEAR DATA 18" W.L.: RADIUS = 754.7' LAYING LENGTH = 25 L.F. DEFLECTION = 1.9° MAX. (PER JOINT)

Note: Unless Otherwise Noted, All Elevations Shown On These Plans Should Be Adjusted By A Value Of Negative 0.035

NOTE: CONTRACTOR SHALL FIELD VERIFY DEPTHS AND LOCATION OF ALL U.E., H.P.G., U.T.V. AND U.T. CONDUITS PRIOR TO ANY TRENCHING.

Profile Scales
Horiz. 1"=40'
Vert. 1"=5'

AS BUILT INFORMATION
CONTRACTOR Albuq. Underground DATE
WORK INSPECTOR'S ACCEPTANCE BY S. Tiano DATE 11/10
FIELD LOCATION BY DATE
DRAWINGS CORRECTED BY DATE
MICRO-FILM INFORMATION
RECORDED BY DATE
NO.

BENCH MARKS
ACS 8-821 ELEV. 5702.26
Bench mark station is marked on 3 1/4" aluminum cap and is located at the north top of curb of Academy Rd. N.E. approximately 375' feet west of Eubank Blvd.
Note: All elevations shown on plan & profile shall be adjusted by a value of -0.035.

SURVEY INFORMATION
FIELD NOTES

NO.	BY	DATE
09-52	D. Kramer	Aug 1987

ENGINEER'S SEAL
REGISTERED PROFESSIONAL ENGINEER — RAYMOND PAGE — NEW MEXICO — 5883
11-10-88

NO.	DATE	REMARKS	BY
1	9/06/89	Record Drawing	E.L.C.

REVISIONS

DESIGNED BY R.P./A.S. DATE October 1987
DRAWN BY A. Salas/P. Hernandez DATE October 1987
CHECKED BY Ray Pang DATE October 1987

CITY OF ALBUQUERQUE
PUBLIC WORKS DEPARTMENT
ENGINEERING DIVISION

TITLE: ACADEMY RD. WATER, SAS & DRAINAGE REHABILITATION
CONCORDIA RD. TO DENALI RD.
PLAN & PROFILE-WATER LINE STATION 9+40 TO 14+70

APPROVALS	ENGINEER	DATE	APPROVALS	ENGINEER	DATE
D.R.C. Chair		11/18/88			
Trans. Dev.					
Utility Dev.		11/16/88			
Hydrology	N/A RAG	6-21-88			

DRAWING NO. 3344 | MAP NO. E-21 | SHEET 5 OF 16

4A43

3344

VILLAGE GREENS AT TANOAN UNIT 1

CONSTRUCTION ℄ CURVE DATA

CURVE	ARC	DELTA	RADIUS	TAN LENGTH
C1	566.57	41°09'32"	788.70	296.13

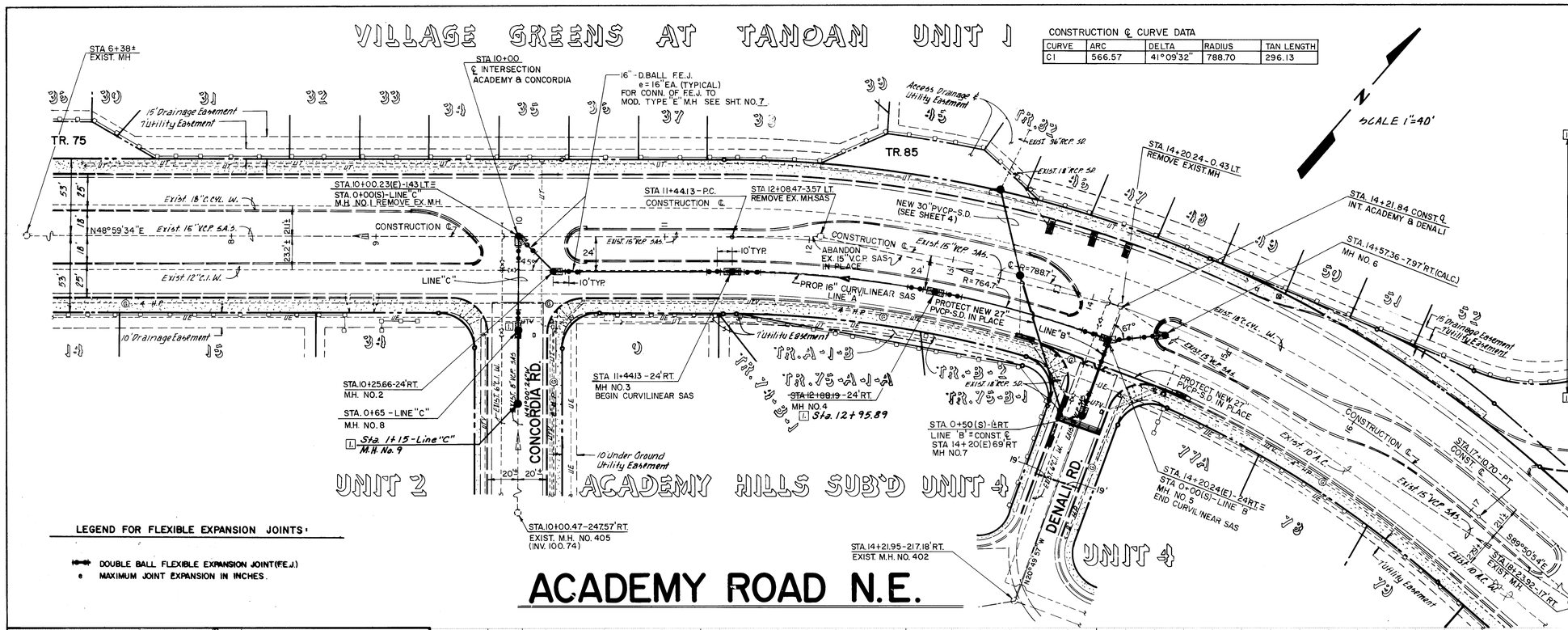

LEGEND FOR FLEXIBLE EXPANSION JOINTS:

- DOUBLE BALL FLEXIBLE EXPANSION JOINT (F.E.J.)
- MAXIMUM JOINT EXPANSION IN INCHES.

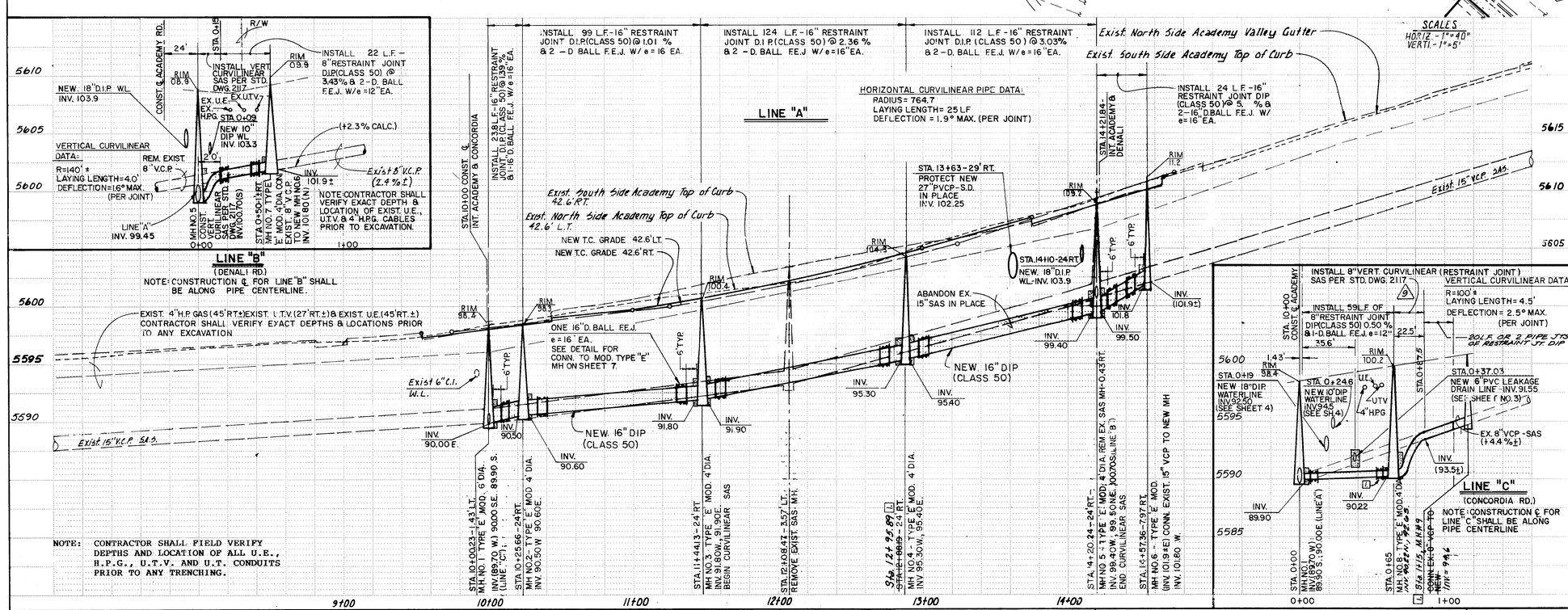

Note: Unless Otherwise Noted, All Elevations Shown On These Plans Should Be Adjusted By A Value Of Negative 0.035.

PIPE SETTLEMENT GAUGE INSTALLATION

INSTALL PIPE SETTLEMENT GAUGE PER DETAILS ON SHEET 8 AT THE FOLLOWING LOCATIONS:

LINE "A" (16" DIP ON ACADEMY RD.)

CONSTRUCTION CENTERLINE STATION	OFFSET (FEET)	* POST CONSTRUCTION ELEVATION
~~10+04.12~~ 10+05.46	~~2.46'~~ RT. 4.12	97.23
~~10+12.25~~ 10+13.89	~~10.59'~~ RT. 12.38	97.49
~~10+31.16~~ 10+32.34	~~24'~~ RT. 24.17	97.51
~~10+55.66~~ 10+56.40	~~24'~~ RT. 23.98	97.64
~~11+19.63~~ 11+20.30	~~24'~~ RT. 24.13	98.99
~~11+38.63~~ 11+37.67	~~24'~~ RT. 24.12	98.92
~~11+49.63~~ 11+50.84	~~24'~~ RT. 24.13	99.40
~~11+68.63~~ 11+70.60	~~24'~~ RT. 24.10	99.84
~~12+57.69~~ 12+58.72	~~24'~~ RT. 24.13	02.10
~~12+76.69~~ 12+77.09	~~24'~~ RT. 24.25	02.59
~~12+87.69~~ 12+88.54	~~24'~~ RT. 24.07	02.88
~~13+06.69~~ 13+09.31	~~24'~~ RT. 24.15	03.72
~~13+95.74~~ 13+95.18	~~24'~~ RT. 24.20	06.96
~~14+14.74~~ 14+13.89	~~24'~~ RT. 24.16	07.01
~~14+21.04~~ 14+24.76	~~17.6'~~ RT. 21.36	07.54
~~14+52.94~~ 14+52.67	~~11.24'~~ RT. 11.03	09.19

LINE "B" (8" DIP ON DENALI RD.)

CONSTRUCTION CENTERLINE STATION	OFFSET (FEET)	* POST CONSTRUCTION ELEVATION
~~0+25~~ 0+25.40	0	08.56
~~0+35~~ 0+35.60	0	08.83

LINE "C" (8" DIP ON CONCORDIA RD.)

CONSTRUCTION CENTERLINE STATION	OFFSET (FEET)	POST CONSTRUCTION ELEVATION
~~0+50~~ 0+50.22	0	96.40

* POST CONSTRUCTION STATIONS & ELEVATIONS SHALL BE ESTABLISHED & CERTIFIED BY A LICENSED SURVEYOR WITHIN TWO WEEKS OF SUBSTANTIAL COMPLETION OF THE NEW LINES BY THE ENGINEER. THIS WORK SHALL BE INCIDENTAL TO CONSTRUCTION SURVEYING.

AS BUILT INFORMATION
CONTRACTOR Abeyg. Underground
WORK STAKED BY
STAKING CHECKS BY
ACCEPTANCE BY S. Ortega DATE 11/10
FIELD VERIFICATION BY
DATE
DRAWINGS CORRECTED BY
DATE
MICRO-FILM INFORMATION
RECORDED BY
DATE
NO

BENCH MARKS
ACS 8-821 ELEV. 5702.26
Bench mark station is marked on 3 1/4" aluminum cap and is located at the north top of curb of Academy Rd. N.E. approximately 375' feet west of Rohwak Blvd.
Note: All elevations shown on plan & profile shall be adjusted by a value of -0.035.

SURVEY INFORMATION
FIELD NOTES

NO.	BY	DATE
179-88	D. Kramer	Apr. 1987

ENGINEER'S SEAL
REGISTERED PROFESSIONAL ENGINEER NEW MEXICO 8895
11-10-88

NO.	DATE	REVISIONS	BY
1	9/06/89	Record Drawing	E.L.O.
2	3-28-89	CHANGE DROP M.H. TO VERT. CURVE SAS	K.P.

REMARKS

DESIGN
DESIGNED BY Ray Pang DATE October 1987
DRAWN BY A. Salas & A.L.O. Sr. DATE October 1987
CHECKED BY Ray Pang DATE October 1987

C of A PWD Maps & Record
1 2 3 4 5 6 7 8 9 10 11
2 6 3 3 4 4 0 6 9 0

RECORD DRAWING
Date: 9-26-89

CITY OF ALBUQUERQUE
PUBLIC WORKS DEPARTMENT
ENGINEERING DIVISION

TITLE: ACADEMY RD. WATER, SAS & DRAINAGE REHABILITATION
CONCORDIA RD. TO DENALI RD.
PLAN & PROFILE - SAS LINE STATION 10+00 TO 14+55

APPROVALS	ENGINEER	DATE	APPROVALS	ENGINEER	DATE
D.R.C. Chair		11/18/88			
Trans. Dev.		11/16/88			
Utility Dev.		11/16/88			
Hydrology		10-21-88			

DRAWING NO.	MAP NO.	SHEET	OF
3344	E-21	6	16

3344

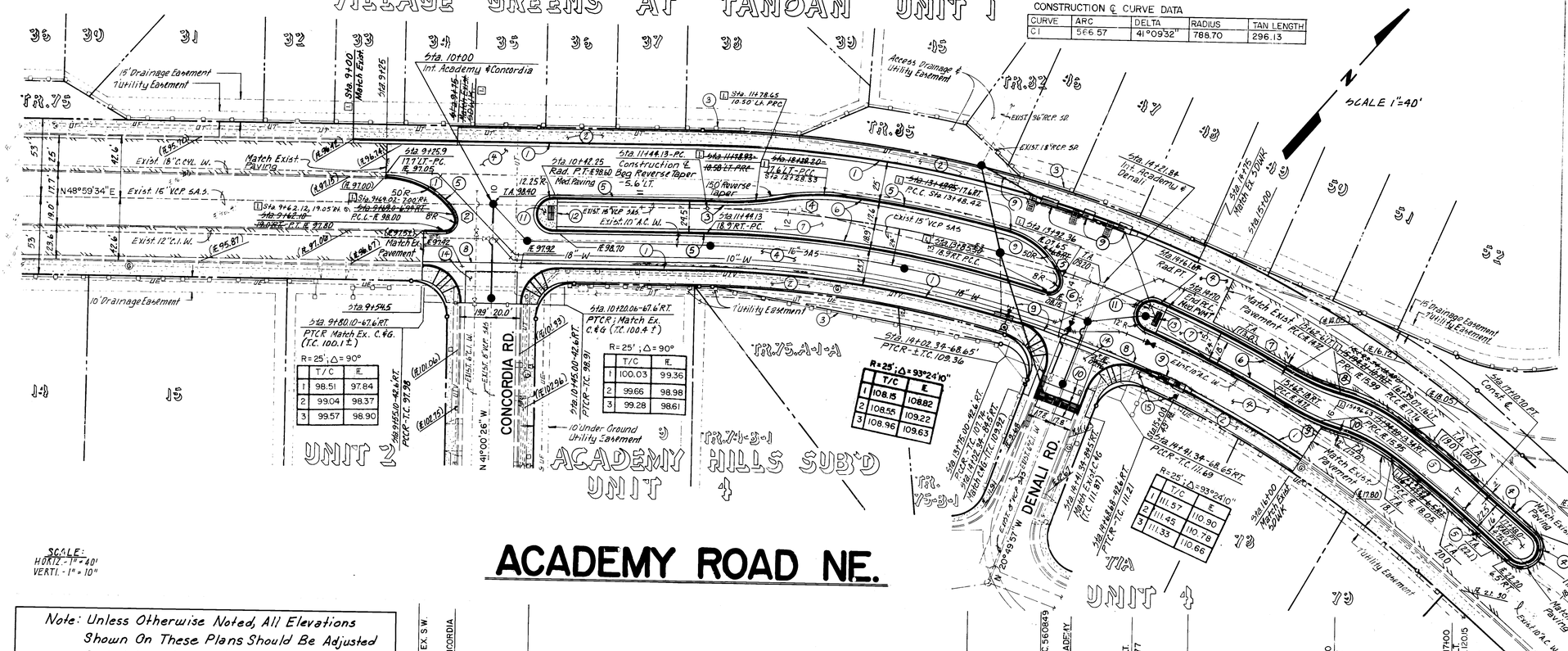

ACADEMY ROAD NE.

SCALE:
HORIZ. - 1" = 40'
VERTI. - 1" = 10"

Note: Unless Otherwise Noted, All Elevations Shown On These Plans Should Be Adjusted By A Value Of Negative 0.035.

PAVING CONSTRUCTION NOTES

1. REMOVE AND REPLACE STANDARD PCC CURB AND GUTTER PER STANDARD DRAWING NO. 2415 AS SHOWN ON PLAN AND PROFILE HEREON.
2. REMOVE AND REPLACE 4" PCC SIDEWALK WITH 12" STRIP OF PATTERNED CONCRETE TO MATCH EXISTING COLOR AND PATTERN AND PER STANDARD DRAWING 2430.
3. PROTECT EXISTING BLOCK WALL IN PLACE.
4. REMOVE AND REPLACE ARTERIAL PAVING PER PAVING SECTION ON SHEET 9.
5. REMOVE EXISTING EXTRUDED A.C. CURB AND CONSTRUCT NEW PCC MEDIAN CURB AND GUTTER PER STANDARD DRAWING NO. 2415.
6. INSTALL 24" WIDE PCC MEDIAN SWALE PER DETAIL ON SHEET NO. 15.
7. INSTALL IRRIGATION SYSTEM AND LANDSCAPING PER SHEET NO.'S 12 THROUGH 15.
8. CONSTRUCT PCC VALLEY GUTTER PER STANDARD DRAWING 2420.
9. CONSTRUCT STORM DRAIN SYSTEM, GUTTER TRANSITIONS AND INLETS PER SHEET 4.
10. CONSTRUCT SPECIAL FULL-WIDTH INLET AND PAVEMENT TRANSITION PER SHEET 4.
11. CONSTRUCT 4" THICK PCC MEDIAN PAVING.
12. CONSTRUCT DOUBLE 'D' INLET, IRRIGATION DRAIN LINE HEADWALL AND 8" C-900 PVC LATERAL PER SHEET 3 AND DETAILS ON SHEET 9.
13. CONSTRUCT DOUBLE 'D' INLET, IRRIGATION DRAIN LINE HEADWALL AND 4" LATERAL PER SHEET 4 AND DETAILS ON SHEET 9.
14. REMOVE AND REPLACE RESIDENTIAL PAVING PER PAVING SECTION ON SHEET 9.
15. SALVAGE, PROVIDE TEMPORARY STORAGE FOR AND RELOCATION OF EXISTING STREET LIGHT POLE. CONSTRUCT TYPE I FOUNDATION, AND COORDINATE WITH PNM FOR DE-ENERGIZING AND RE-ENERGIZING OF CIRCUIT. CONTRACTOR SHALL ALSO BE RESPONSIBLE FOR ALL ASSOCIATED COSTS OF NEW WIRING AND CONDUIT WORK IN COMPLIANCE WITH PNM STANDARDS TO COMPLETE THIS RELOCATION.

BENCH MARKS

AGS 8-E21 ELEV. 5702.26
Bench mark station is marked on 3 1/4" aluminum cap and is located at the north top of curb of Academy Rd. N.E. approximately 375' feet west of Eubank Blvd.

Note:
All elevations shown on plan & profile shall be adjusted by a value of -0.035.

Albuq. Underground 5. May 4 1/90

AS BUILT NOTES

ELO BY
9/1/89 Record Drawing
NO. DATE REMARKS
Ray Pang
A Sales & A. J. Olivas Sr. October 1987
Ray Pang October 1987
Ray Pang October 1987

11-10-88

Copied from Maps & Records
26 33 34 40 07 79 90

4434

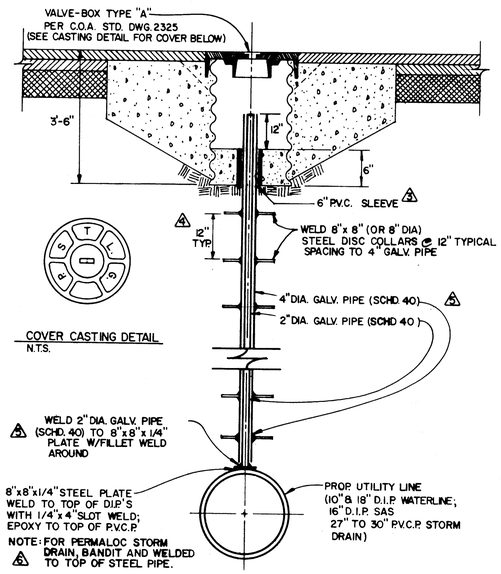

COVER CASTING DETAIL
N.T.S.

TYPICAL PIPE SETTLEMENT GAUGE INSTALLATION
N.T.S.

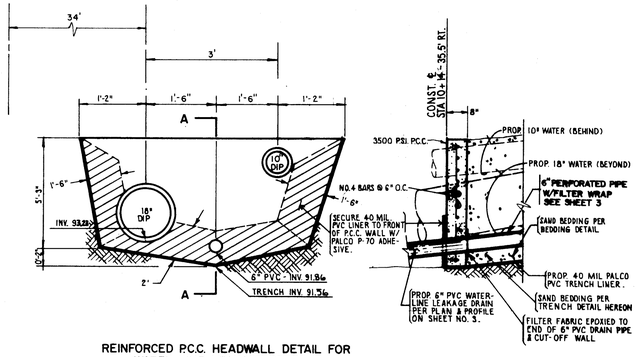

REINFORCED P.C.C. HEADWALL DETAIL FOR WATER LINE LEAKAGE DRAIN @ ℄ STATION 10+47.25
1 N.T.S.

SECTION A-A

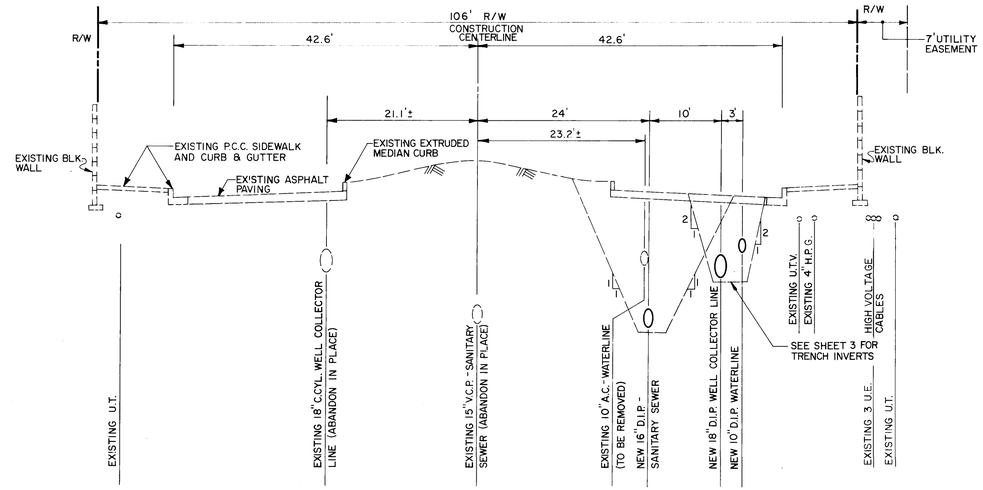

ACADEMY ROAD
TYPICAL CROSS SECTION - LOOKING EAST

Note: Unless Otherwise Noted, All Elevations Shown On These Plans Should Be Adjusted By A Value Of Negative 0.035.

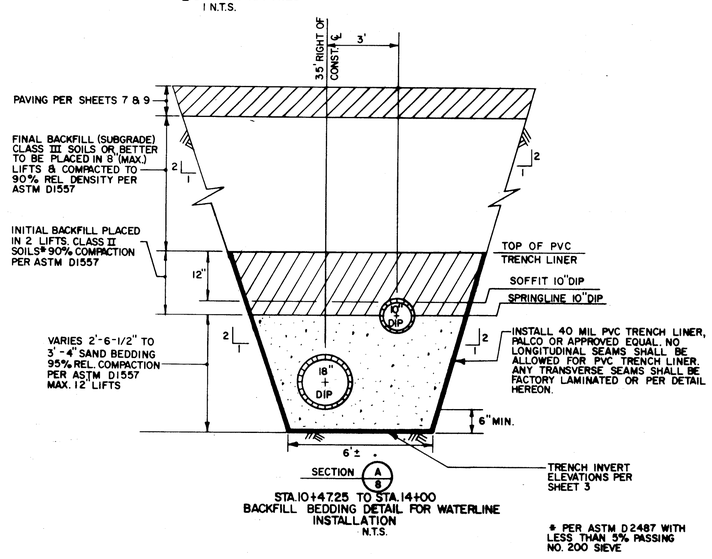

SECTION A/B

STA. 10+47.25 TO STA. 14+00
BACKFILL BEDDING DETAIL FOR WATERLINE INSTALLATION
N.T.S.

* PER ASTM D2487 WITH LESS THAN 5% PASSING NO. 200 SIEVE

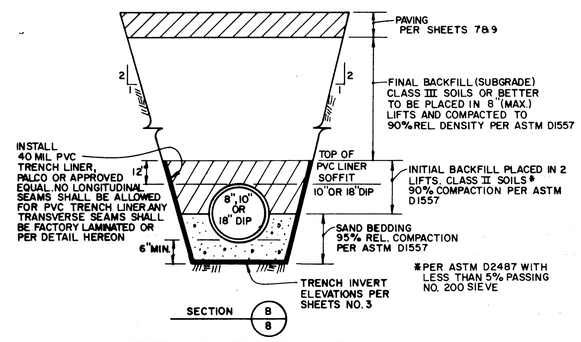

SECTION B/B

STATION 14+00 TO STATION 14+85
N.T.S. BACKFILL BEDDING DETAIL FOR WATERLINE INSTALLATION

* PER ASTM D2487 WITH LESS THAN 5% PASSING NO. 200 SIEVE

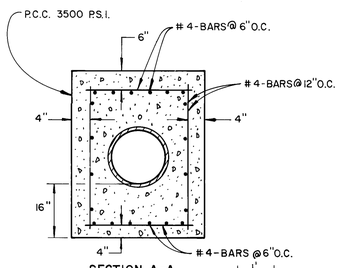

SECTION A-A

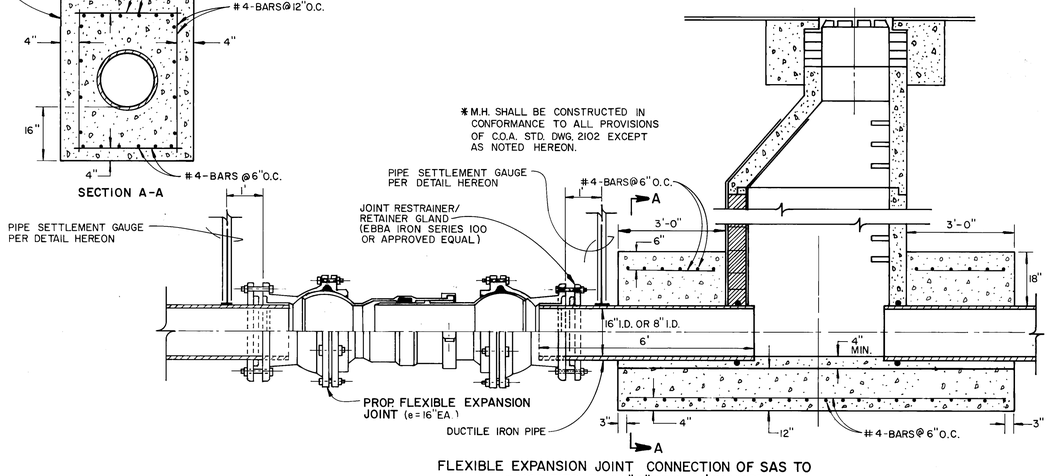

FLEXIBLE EXPANSION JOINT CONNECTION OF SAS TO * MODIFIED TYPE "E" M.H. - 4' DIAMETER
SCALE: 1" = 2'

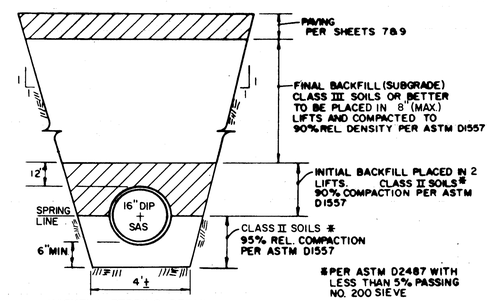

BACKFILL BEDDING DETAIL
FOR SANITARY SEWER
N.T.S.

* PER ASTM D2487 WITH LESS THAN 5% PASSING NO. 200 SIEVE

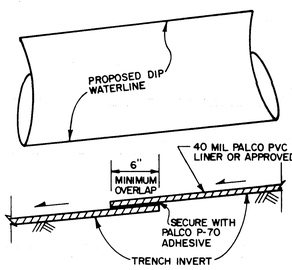

40 MIL PVC TRENCH LINER
NON-FACTORY-LAMINATED
TRANSVERSE SEAM DETAIL
N.T.S.

AS BUILT INFORMATION
CONTRACTOR Albuq. Underground
WORK STAKED BY
INSPECTOR'S ACCEPTANCE BY S. Wilson DATE 11/90
FIELD VERIFICATION BY
DRAWINGS CORRECTED BY
DATE
MICRO-FILM INFORMATION
RECORDED BY
DATE
NO.

BENCH MARKS
ACS B-821 ELEV. 5702.26
Bench mark station is marked on 3 1/4" aluminum cap and is located at the north top of curb of Academy Rd. N.E. approximately 375' feet west of Eubank Blvd.
Note:
All elevations shown on plan & profile shall be adjusted by a value of -0.035.

SURVEY INFORMATION
FIELD NOTES

NO.	BY	DATE
03-82	D. Kramer	Sep 1987

ENGINEER'S SEAL

NO.	DATE	REMARKS	BY
4	3-27-89	ADD 6" PVC SLEEVE TO SETTLEMENT GAUGE	R.P.
3	"	ADD 8"x8" DISC COLLAR TO 4" GALV. PIPE	R.P.
2	"	CHANGE 16 GAUGE TO SCHEDULE 40	"
1	"	ADD NOTE FOR PERMALOC ST. DRAIN	"

REVISIONS

DESIGN
DESIGNED BY Ray Pang DATE June 1988
DRAWN BY A. Salas DATE June 1988
CHECKED BY Ray Pang DATE June 1988

RECORD DRAWING
Date: 9-26-89

Maps & Records
26 33 34 40 8 9 10

CITY OF ALBUQUERQUE
PUBLIC WORKS DEPARTMENT
ENGINEERING GROUP

TITLE: ACADEMY RD. WATER, SAS & DRAINAGE REHABILITATION
CONCORDIA RD. TO DENALI RD.
SECTIONS AND DETAILS - WATER & S.A.S.

APPROVALS	ENGINEER	DATE	APPROVALS	ENGINEER	DATE
D.R.C. Chair		11/18/88			
Trans. Dev.					
Utility Dev.		11/16/88			
Hydrology		10-21-88			

DRAWING NO. 3344 | MAP NO. E-21 | SHEET 8 OF 16

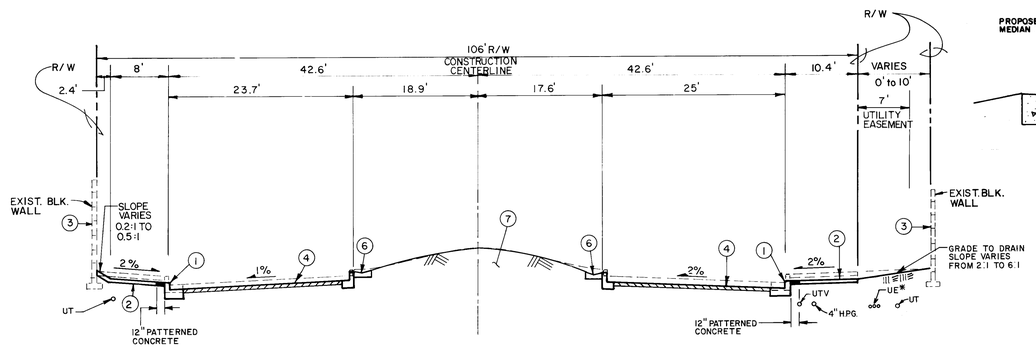

STA. 11+50 TO STA. 13+75

SCALE
HORIZ. 1" = 10'
VERT. 1" = 5'

* HIGH VOLTAGE CABLES

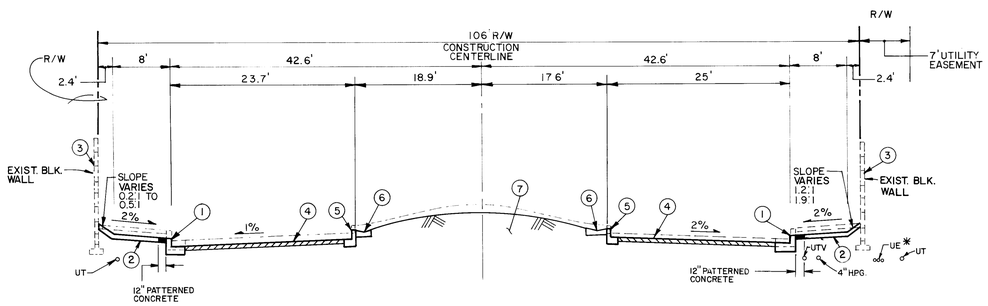

STA. 9+54.5 TO STA. 14+75

SCALE:
HORIZ. 1" = 10'
VERT. 1" = 5'

* HIGH VOLTAGE CABLES

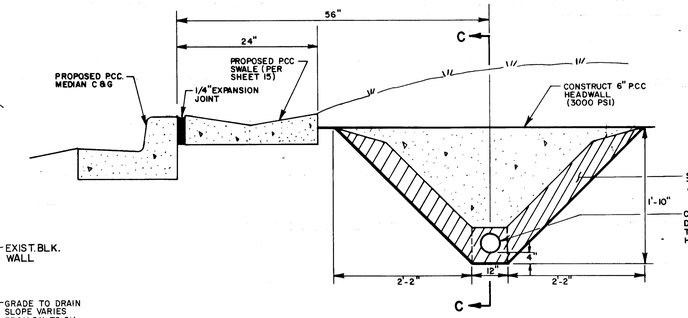

SECTION 'B-B'
NTS

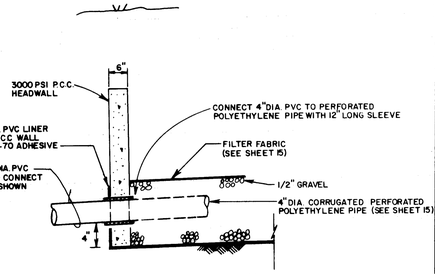

SECTION 'C-C'
NTS

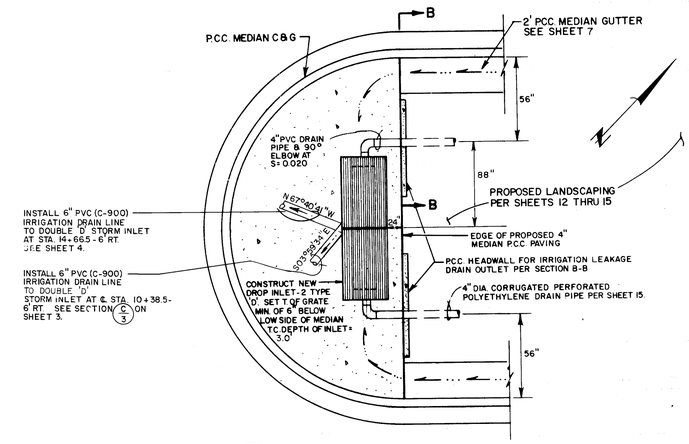

A/9 IRRIGATION LEAKAGE DRAIN HEADWALL AND OUTLET
NTS

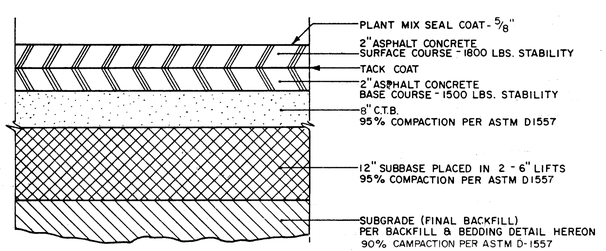

PAVING SECTION
ACADEMY RD.
N. T. S.

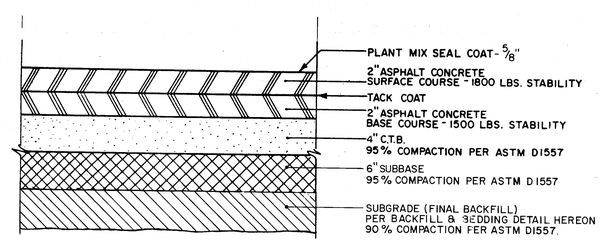

PAVING SECTION
CONCORDIA RD. & DENALI RD.
NTS

PAVING CONSTRUCTION NOTES

1. REMOVE AND REPLACE STANDARD PCC CURB AND GUTTER PER STANDARD DRAWING NO. 2415 AS SHOWN ON PLAN AND PROFILE HEREON.
2. REMOVE AND REPLACE 4" PCC SIDEWALK WITH 12" STRIP OF PATTERNED CONCRETE TO MATCH EXISTING COLOR AND PATTERN.
3. PROTECT EXISTING BLOCK WALL IN PLACE.
4. REMOVE AND REPLACE ARTERIAL PAVING PER PAVING SECTION ON SHEET 9.
5. REMOVE EXISTING EXTRUDED A.C. CURB AND CONSTRUCT NEW PCC MEDIAN CURB AND GUTTER PER STANDARD DRAWING NO. 2415.
6. INSTALL 24" WIDE PCC MEDIAN SWALE PER DETAIL ON SHEET NO. 15.
7. INSTALL IRRIGATION SYSTEM AND LANDSCAPING PER SHEET NO.'S 12 THROUGH 15.

Note: Unless Otherwise Noted, All Elevations Shown On These Plans Should Be Adjusted By A Value Of Negative 0.035.

NOTE: CONTRACTOR SHALL FIELD VERIFY DEPTHS AND LOCATION OF ALL U.E., H.P.G., U.T.V. AND U.T. CONDUITS PRIOR TO ANY TRENCHING.

26 33440990

RECORD DRAWING
Date 9-26-89

AS BUILT INFORMATION
CONTRACTOR Albuq. Underground DATE
WORK STAKED BY DATE
INSPECTOR ACCEPTANCE BY S. Maya DATE 11/90
FIELD VERIFICATION BY DATE
DRAWINGS CORRECTED BY DATE
MICRO-FILM INFORMATION
RECORDED BY DATE
NO

BENCH MARKS
ACS 8-E21 ELEV. 5702.26
Bench mark station is marked on 3 1/4" aluminum cap and is located at the north top of curb of Academy Rd. N.E. approximately 375' feet west of Eubank Blvd.
Note:
All elevations shown on plan & profile shall be adjusted by a value of -0.035.

SURVEY INFORMATION
FIELD NOTES

NO.	BY	DATE
75-82	D. Kramer	Sep 1987

ENGINEER'S SEAL
11-10-88

NO.	DATE	REMARKS	BY

REVISIONS

DESIGN
DESIGNED BY Ray Pang DATE June 1988
DRAWN BY A. Salas DATE June 1988
CHECKED BY Ray Pang DATE June 1988

CITY OF ALBUQUERQUE
PUBLIC WORKS DEPARTMENT
ENGINEERING GROUP

TITLE: ACADEMY RD WATER, SAS & DRAINAGE REHABILITATION
CONCORDIA RD. TO DENALI RD.
SECTIONS & DETAILS - PAVING

APPROVALS	ENGINEER	DATE	APPROVALS	ENGINEER	DATE
D.R.C. Chair		11/10/88			
Trans. Dev.					
Utility Dev.		11/16/88			
Hydrology		10-21-88			

DRAWING NO.	MAP NO.	SHEET	OF
3344	E-21	9	16

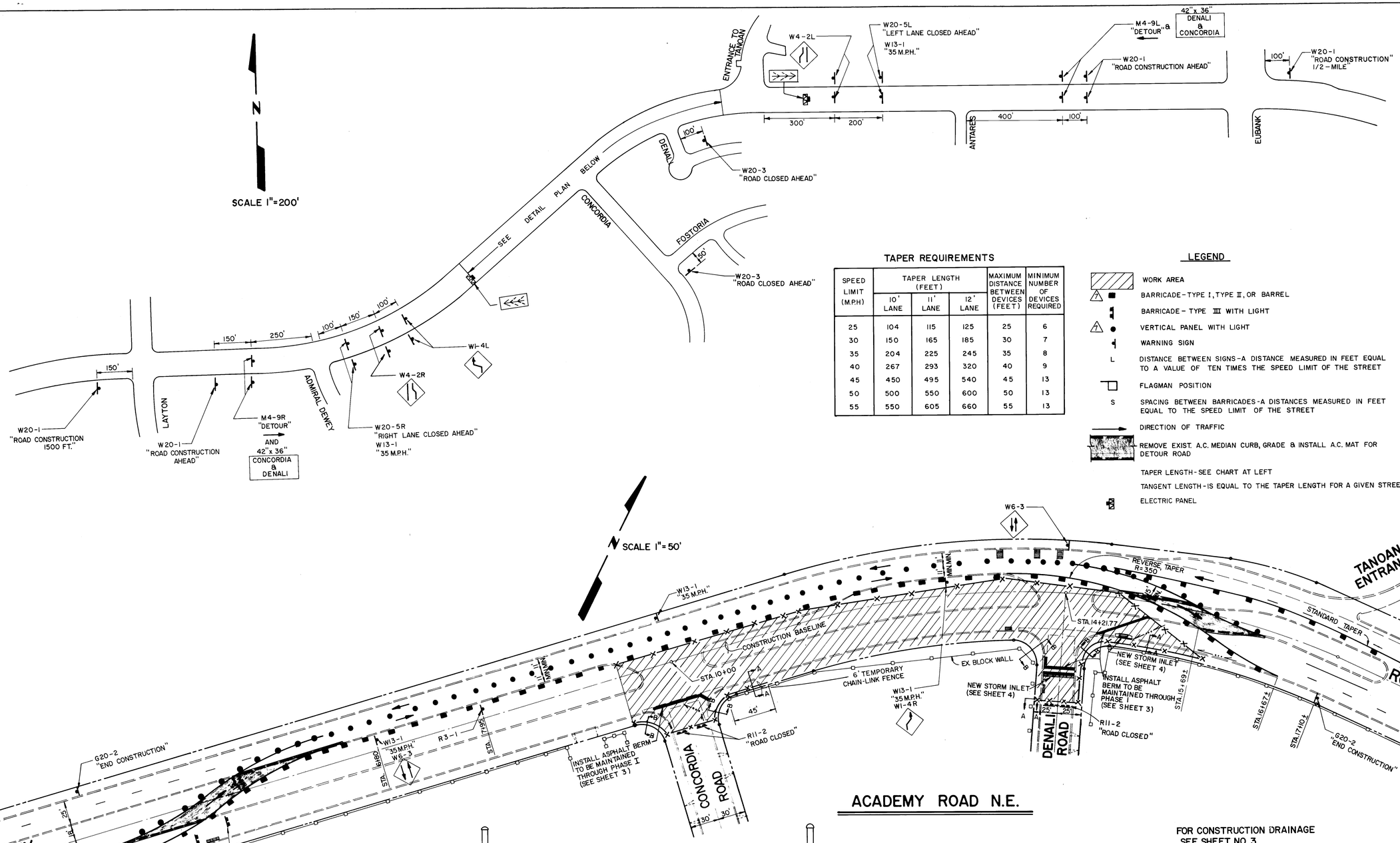

TAPER REQUIREMENTS

SPEED LIMIT (M.P.H)	TAPER LENGTH (FEET)			MAXIMUM DISTANCE BETWEEN DEVICES (FEET)	MINIMUM NUMBER OF DEVICES REQUIRED
	10' LANE	11' LANE	12' LANE		
25	104	115	125	25	6
30	150	165	185	30	7
35	204	225	245	35	8
40	267	293	320	40	9
45	450	495	540	45	13
50	500	550	600	50	13
55	550	605	660	55	13

LEGEND

- WORK AREA
- BARRICADE - TYPE I, TYPE II, OR BARREL
- BARRICADE - TYPE III WITH LIGHT
- VERTICAL PANEL WITH LIGHT
- WARNING SIGN
- L — DISTANCE BETWEEN SIGNS - A DISTANCE MEASURED IN FEET EQUAL TO A VALUE OF TEN TIMES THE SPEED LIMIT OF THE STREET
- FLAGMAN POSITION
- S — SPACING BETWEEN BARRICADES - A DISTANCES MEASURED IN FEET EQUAL TO THE SPEED LIMIT OF THE STREET
- DIRECTION OF TRAFFIC
- REMOVE EXIST. A.C. MEDIAN CURB, GRADE & INSTALL A.C. MAT FOR DETOUR ROAD
- TAPER LENGTH - SEE CHART AT LEFT
- TANGENT LENGTH - IS EQUAL TO THE TAPER LENGTH FOR A GIVEN STREET
- ELECTRIC PANEL

ACADEMY ROAD N.E.

FOR CONSTRUCTION DRAINAGE SEE SHEET NO. 3

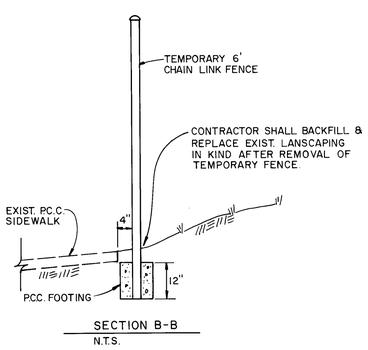

SECTION B-B
N.T.S.

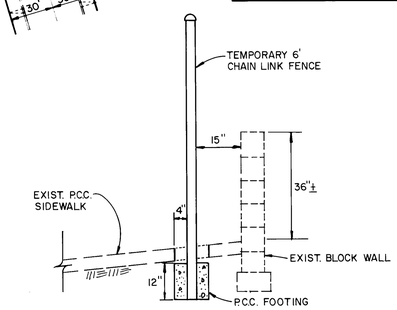

SECTION A-A
N.T.S.

RECORD DRAWING
Date: 9-26-89

Conf. & PWD Maps & Records
26 33 44 10 19 0

CITY OF ALBUQUERQUE
PUBLIC WORKS DEPARTMENT
ENGINEERING GROUP

TITLE: ACADEMY RD. WATER, SAS & DRAINAGE REHABILITATION
CONCORDIA RD. TO DENALI RD.
TRAFFIC CONTROL PLAN PHASE I

APPROVALS	ENGINEER	DATE	APPROVALS	ENGINEER	DATE
D.R.C. Chair		11/18/88			
Trans. Dev.		" " "			
Utility Dev.		11/16/88			
Hydrology		10-21-88			

DRAWING NO.	MAP NO.	SHEET	OF
3344	E-21	10	16

AS BUILT INFORMATION
CONTRACTOR Alvarez Anderson
WORK STAKED BY
INSPECTOR'S ACCEPTANCE BY S. Hayes DATE 11/89
FIELD VERIFICATION BY DATE
DRAWINGS CORRECTED BY DATE
MICRO-FILM INFORMATION
RECORDED BY DATE
NO

BENCH MARKS
ACS 8-E21 ELEV. 5702.26
Bench mark station is marked on 3 1/4" aluminum cap and is located at the north top of curb of Academy Rd. N.E. approximately 375' feet west of Eubank Blvd.
Note:
All elevations shown on plan & profile shall be adjusted by a value of -0.035.

SURVEY INFORMATION
FIELD NOTES

NO.	BY	DATE
05-52	D. Kramer	Aug/1987

ENGINEER'S SEAL
NEW MEXICO REGISTERED PROFESSIONAL ENGINEER
11-10-88

NO.	DATE	REMARKS	BY
1	9-27-89	REV. LEGEND	K.P.

REVISIONS
DESIGN
DESIGNED BY Ray Pang DATE June 1988
DRAWN BY A. Salas DATE June 1988
CHECKED BY Ray Pang DATE June 1988

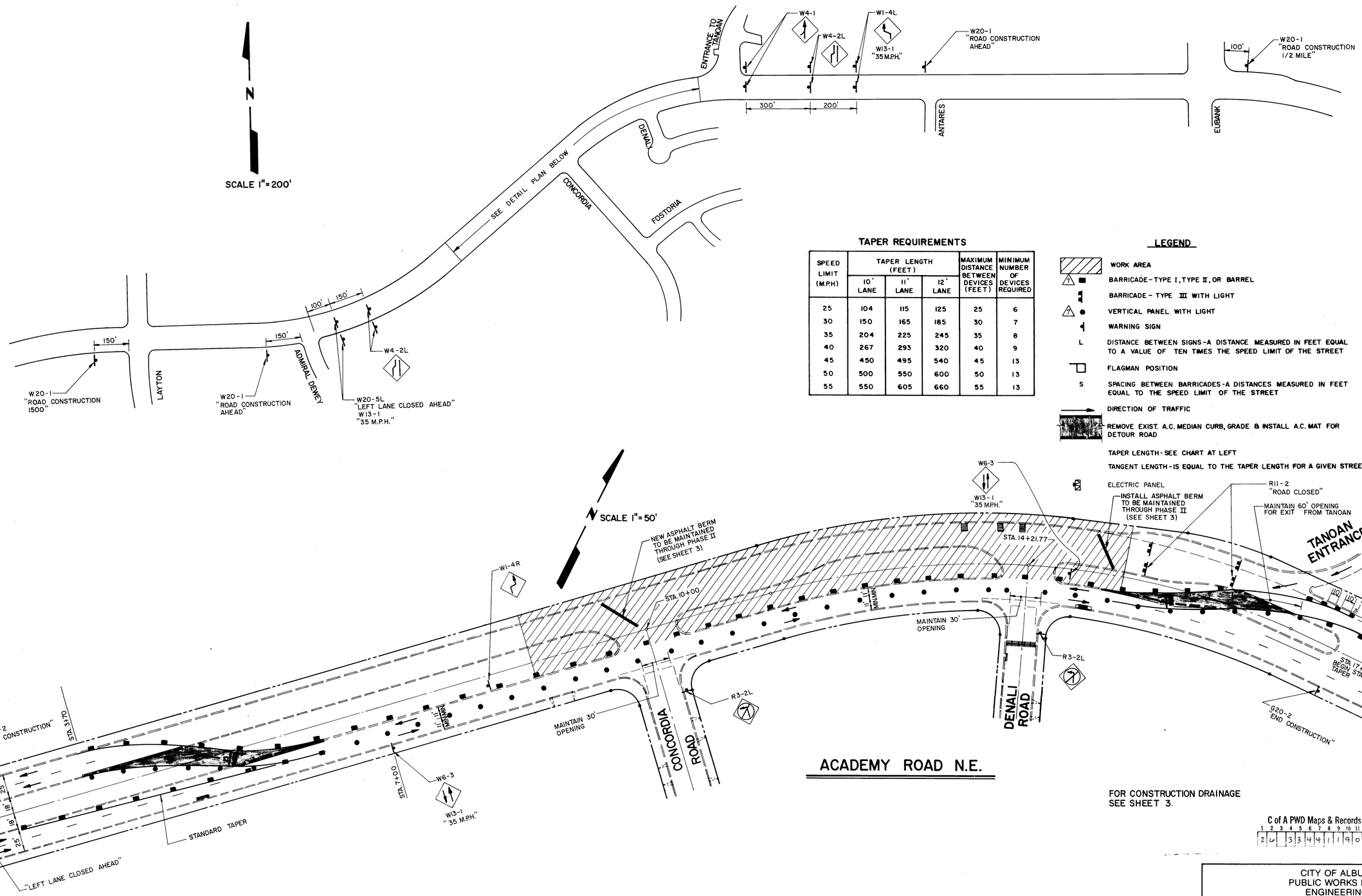

ACADEMY ROAD N.E.

FOR CONSTRUCTION DRAINAGE SEE SHEET 3.

TAPER REQUIREMENTS

SPEED LIMIT (M.P.H)	TAPER LENGTH (FEET)			MAXIMUM DISTANCE BETWEEN DEVICES (FEET)	MINIMUM NUMBER OF DEVICES REQUIRED
	10' LANE	11' LANE	12' LANE		
25	104	115	125	25	6
30	150	165	185	30	7
35	204	225	245	35	8
40	267	293	320	40	9
45	450	495	540	45	13
50	500	550	600	50	13
55	550	605	660	55	13

LEGEND

- WORK AREA
- BARRICADE-TYPE I, TYPE II, OR BARREL
- BARRICADE - TYPE III WITH LIGHT
- VERTICAL PANEL WITH LIGHT
- WARNING SIGN
- L — DISTANCE BETWEEN SIGNS-A DISTANCE MEASURED IN FEET EQUAL TO A VALUE OF TEN TIMES THE SPEED LIMIT OF THE STREET
- FLAGMAN POSITION
- S — SPACING BETWEEN BARRICADES-A DISTANCES MEASURED IN FEET EQUAL TO THE SPEED LIMIT OF THE STREET
- DIRECTION OF TRAFFIC
- REMOVE EXIST. A.C. MEDIAN CURB, GRADE & INSTALL A.C. MAT FOR DETOUR ROAD
- TAPER LENGTH-SEE CHART AT LEFT
- TANGENT LENGTH-IS EQUAL TO THE TAPER LENGTH FOR A GIVEN STREET

C of A PWD Maps & Records

1 2 3 4 5 6 7 8 9 10 11
2 6 3 3 4 4 1 1 9 0

RECORD DRAWING
Date: 9-26-89

AS BUILT INFORMATION
CONTRACTOR Albus Underpaved
WORK STAKED BY
INSPECTOR'S
ACCEPTANCE BY S. Moya DATE 11/10
FIELD VERIFICATION BY DATE
DRAWINGS CORRECTED BY DATE
MICRO-FILM INFORMATION
RECORDED BY DATE
NO

BENCH MARKS
AGS 8-E21 ELEV. 5702.26
Bench mark station is marked on 3 1/4" aluminum cap and is located at the north top of curb of Academy Rd. N.E. approximately 375' feet west of Eubank Blvd.
Note:
All elevations shown on plan & profile shall be adjusted by a value of -0.035.

SURVEY INFORMATION
FIELD NOTES

NO.	BY	DATE
05-92	D. Kramer	Sep. 1987

ENGINEER'S SEAL
RAY PANG NEW MEXICO 5885 REGISTERED PROFESSIONAL ENGINEER
11-10-88

NO.	DATE	REMARKS	BY
1	3-27-89	Revise Legend	K.P.

REVISIONS
DESIGN
DESIGNED BY Ray Pang DATE June 1988
DRAWN BY A. Salas DATE June 1988
CHECKED BY Ray Pang DATE June 1988

CITY OF ALBUQUERQUE
PUBLIC WORKS DEPARTMENT
ENGINEERING GROUP

TITLE: ACADEMY RD. WATER, SAS & DRAINAGE REHABILITATION
CONCORDIA RD. TO DENALI RD.
CONSTRUCTION TRAFFIC CONTROL PHASE 2

APPROVALS	ENGINEER	DATE	APPROVALS	ENGINEER	DATE
D.R.C. Chair		11/10/88			
Trans. Dev.		11/16/88			
Utility Dev.					
Hydrology	N/A	10-21-88			

DRAWING NO.	MAP NO.	SHEET	OF
3344	E-21	11	16

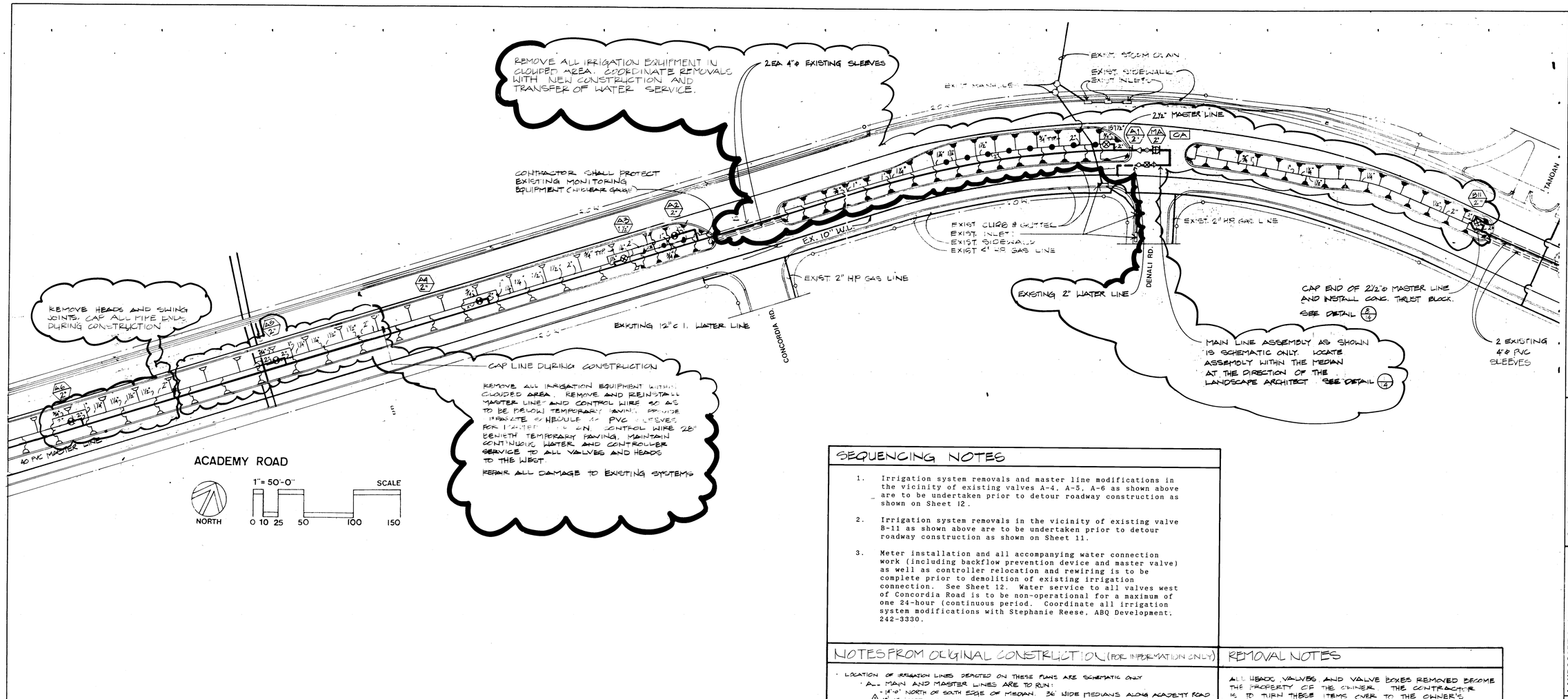

SEQUENCING NOTES

1. Irrigation system removals and master line modifications in the vicinity of existing valves A-4, A-5, A-6 as shown above are to be undertaken prior to detour roadway construction as shown on Sheet 12.

2. Irrigation system removals in the vicinity of existing valve B-11 as shown above are to be undertaken prior to detour roadway construction as shown on Sheet 11.

3. Meter installation and all accompanying water connection work (including backflow prevention device and master valve) as well as controller relocation and rewiring is to be complete prior to demolition of existing irrigation connection. See Sheet 12. Water service to all valves west of Concordia Road is to be non-operational for a maximum of one 24-hour (continuous period. Coordinate all irrigation system modifications with Stephanie Reese, ABQ Development, 242-3330.

IRRIGATION LEGEND FROM ORIGINAL CONSTRUCTION (FOR INFORMATION ONLY)

SYMBOL	MANUFACTURER	MODEL NUMBER	DESCRIPTION	NOTES
	TORO / HYDRO RAIN	216-06-08 / 102-1R	MASTER VALVE ASSEMBLY	SEE DETAIL 3/4
	TORO	216-27-08	PRESSURE REGULATING VALVE	ADJUST AS REQUIRED SEE DETAIL 5/14
	TORO	216 SERIES	REMOTE CONTROL VALVE	SEE DETAIL 1/14 SIZE AS INDICATED
	CHAMPION	MODEL 100RS-200	STRAIGHT CONTROL VALVE 2"	SEE 2/14
	CHAMPION	MODEL 262	ANGLE VACUUM BREAKER 2"	SEE DETAIL 7/14
CA	RAIN BIRD	CIC-12, CIC-8	COMPUTER CONTROLLER IN CONC. VAULT	SEE NOTES SEE DETAIL 8/14
	WILKINS	600 SERIES W/ CHAMPION 100RS-100	PRESSURE REGULATOR 2"/1" CONTROL VALVE	SEE DETAIL 4/14
			WATER METER	SEE NOTES THIS SHEET
	TORO	S600C-180-6.0, S600C-PC-3.0, S600-PC-3.0	GEAR DRIVEN ROTARY SPRINKLER	36' TYPICAL TRIANGULAR SPACING SEE 9/14
	TORO	316-00-02, 308-00-02, 306-00-02, 305-00-02, 304-00-02	GEAR DRIVEN MULT. NOZZLE SPRINKLER	21' TYPICAL TRIANGULAR SPACING SEE 6/14
	RAIN-O-MAT	350EH, 330EQ	POP-UP SPRAY SPRINKLER	15' TYPICAL TRIANGULAR SPACING SEE 6/14
		2½"Φ SCHEDULE 40	MASTER LINE	24" BURY
		SCHEDULE 40 PVC PIPE	LATERAL LINE SIZE AS INDICATED	18" BURY
		2"Φ SCHEDULE 40 PVC PIPE	MAIN LINE	SEE 7/4 28" BURY. MAIN LINE OCCURS BETWEEN WATER SERVICE AND WATER VALVE ONLY.
	VALVE NUMBER / VALVE SIZE			
			EXISTING SLEEVE	
			EXISTING MAIN LINE	
			EXISTING SHUT-OFF VALVE	

NOTES FROM ORIGINAL CONSTRUCTION (FOR INFORMATION ONLY)

- LOCATION OF IRRIGATION LINES DEPICTED ON THESE PLANS ARE SCHEMATIC ONLY
  - ALL MAIN AND MASTER LINES ARE TO RUN:
    - 14'-0" NORTH OF SOUTH EDGE OF MEDIAN. 36' WIDE MEDIANS ALONG ACADEMY ROAD
    - 12'-0" NORTH OF SOUTH EDGE OF MEDIAN 21' WIDE MEDIANS ALONG ACADEMY ROAD
    - 5'-0" EAST OF WEST EDGE OF MEDIAN. ALL MEDIANS ALONG VENTURA STREET.
  - LATERAL LINES SHOWN PARALLEL TO THE MASTER LINE ARE TO RUN 18" BELOW FINISH GRADE, IN SAME TRENCH AS THE MASTER LINE.
- CONTRACTOR SHALL INSTALL CONCRETE THRUST BLOCKS AT ALL MAIN AND MASTER LINE TEES ELBOWS AND CAPS AS PER DETAIL 1/4
- COMPUTER CONTROLLER SHALL BE INSTALLED IN A PRECAST CONCRETE VAULT. SEE 8/14 AVAILABLE FROM MATERIALS INC. 1500 OSUNA NE. CONTRACTOR IS TO VERIFY ADEQUATE CONDUIT ACCESS FOR NUMBER OF CONTROLLERS
- CONTROL WIRES SHALL BE SECURELY TAPED TOGETHER WITH ELECTRICAL TAPE EVERY 10 FEET AND SHALL BE SNAKED IN TRENCH BOTTOM ADJACENT TO MASTER LINE SIZE WIRE AS INDICATED IN VALVE SCHEDULE. THIS SHEET.

  CONTROL WIRES NOT LOCATED IN MASTER LINE TRENCHES SHALL BE PLACED 18" BELOW FINISH GRADE.
- CONTRACTOR SHALL STAKE ALL HEAD LOCATIONS AND RECIEVE APPROVAL OF THESE LOCATIONS BY THE LANDSCAPE ARCHITECT PRIOR TO EXCAVATION OF LATERAL LINE TRENCHES
- CONTRACTOR SHALL STAKE ALL MASTER VALVE AND VACUUM BREAKER LOCATIONS FOR APPROVAL BY THE LANDSCAPE ARCHITECT PRIOR TO MAIN AND MASTER LINE TRENCH EXCAVATION.
- CONTRACTOR SHALL COORDINATE METER INSTALLATION WITH AMERIWEST CORP AND THE CITY OF ALBUQUERQUE. AMERIWEST CORP IS RESPONSIBLE FOR ALL WATER SERVICE EXPANSION CHARGES AND METER SET CHARGES. CONTRACTOR IS RESPONSIBLE FOR:
  - NOTIFYING AMERIWEST CORP (FRED AMEROAI, ASSISTANT PROJECT MANAGER) IN WRITING 14 DAYS PRIOR TO PROPOSED DATE OF METER INSTALLATION.
  - PROVIDING THE CITY OF ALBUQUERQUE WATER RESOURCES DEPARTMENT WITH ALL INFORMATION REQUIRED FOR WATER METER INSTALLATION.
- CONTRACTOR SHALL NOTIFY THE LANDSCAPE ARCHITECT OF EXISTING STATIC WATER PRESSURE AT EACH OF THE 5 POINTS OF CONNECTION PRIOR TO COMMENCEMENT OF ANY IRRIGATION WORK.
- CONTRACTOR SHALL INSTALL ELECTRONIC MARKER DISCS. (EMD) AT BOTH ENDS OF ALL IRRIGATION LINE SLEEVES AND ALL VALVE WIRE SLEEVES.
- EXISTING UTILITY LINE LOCATIONS SHOWN ON THESE DRAWINGS ARE SCHEMATIC. LINE LOCATIONS ARE APPROXIMATE ONLY. IN SOME CASES, PORTIONS OF UTILITY LINES HAVE BEEN OMITTED FOR CLARITY OF DRAWING. CONTRACTOR IS TO NOTIFY BLUE STAKES (765-1234) PRIOR TO ANY EXCAVATION. CONTRACTOR IS TO UNDERTAKE EXTREME CAUTION IN ALL TRENCHING TO PROTECT ALL EXISTING UTILITY LINES.
- CONTRACTOR SHALL ADJUST ALL HEADS, NOZZLES AND ARCS AS NECESSARY TO MINIMIZE SPRAY ONTO ADJACENT ROAD.

48 HOURS BEFORE YOU DIG STOP! CALL FOR THE BLUE STAKES 765-1234

REMOVAL NOTES

ALL HEADS, VALVES, AND VALVE BOXES REMOVED BECOME THE PROPERTY OF THE OWNER. THE CONTRACTOR IS TO TURN THESE ITEMS OVER TO THE OWNER'S REPRESENTATIVE PRIOR TO FINAL ACCEPTANCE.

THE CONTRACTOR IS TO MAINTAIN CONTINUOUS WATER SERVICE TO ALL LANDSCAPED AREAS SERVED BY THE EXISTING WATER METER LOCATED AT DENALI RD. COORDINATE REMOVALS WITH NEW SERVICE AS SHOWN ON SHEET 12.

City & PWD Maps & Records
2 6 3 3 4 4 1 2 9 0

RECORD DRAWING
Date: 9-26-89

AS BUILT INFORMATION
CONTRACTOR Albuq. Underground
WORK STAKED BY
INSPECTOR
ACCEPTANCE BY S. Hoye DATE 11/92
FIELD DRAWINGS CORRECTED BY DATE
MICRO-FILM INFORMATION
RECORDED BY DATE
NO

BENCH MARKS
ACS 8-E21 ELEV. 5702.26
Bench mark station is marked on 3 1/4" aluminum cap and is located at the north top of curb of Academy Rd. N.E. approximately 375' feet west of Eubank Blvd.
Note:
All elevations shown on plan & profile shall be adjusted by a value of -0.035.

SURVEY INFORMATION
FIELD NOTES

NO.	BY	DATE

LANDSCAPE ARCHITECT'S SEAL

NO.	DATE	REMARKS	BY

REVISIONS

		DATE
DESIGNED BY	COPA	7-15-88
DRAWN BY		DATE 7-15-88
CHECKED BY	WSP	DATE 7-15-88

CITY OF ALBUQUERQUE
PUBLIC WORKS DEPARTMENT
ENGINEERING GROUP

TITLE: ACADEMY RD. WATER, SAS & DRAINAGE REHABILITATION
CONCORDIA RD. TO DENALI RD.
IRRIGATION REMOVAL PLAN

APPROVALS	ENGINEER	DATE	APPROVALS	ENGINEER	DATE
D.R.C. Chair		11/16/88	Hydrology	N/A	10-21-88
Trans. Dev.					
Utility Dev.	PEGO	11/16/88			
Parks	Diane Yocum	10-17-88			

DRAWING NO.	MAP NO.	SHEET	OF
3344	E-21	12	16

IRRIGATION NOTES

* Contractor shall coordinate tap of 12 c.i. water line and installation of 2" water meter west of Concordia Rd. with the City of Albuquerque. The City of Albuquerque is responsible for all water service expansion charges and meter set charges.

* Contractor shall install electrical disconnect on pedestal adjacent to existing electrical service pedestal west of Denali Rd. and run 110 v. service in conduit to irrigation controller and backflow prevention device.

* Contractor shall stake all controller, valve, backflow prevention device and head locations for approval of Engineer prior to excavation.

* Contractor shall install one electronic marker disc at each end of PVC sleeve group at Concordia Rd.

* Contractor is to reconnect all valves to the controller so lawn areas are watered in sequential order from Denali Rd. west to Ventura Rd.

* Contractor is responsible to maintain continuous water service to the existing main and master irrigation lines throughout the duration of the project. Contractor shall be responsible for maintenance of areas within the limits of construction as shown on the drawings or within areas affected by work by the Contractor. Contractor shall be responsible for repair of damage to existing improvements.

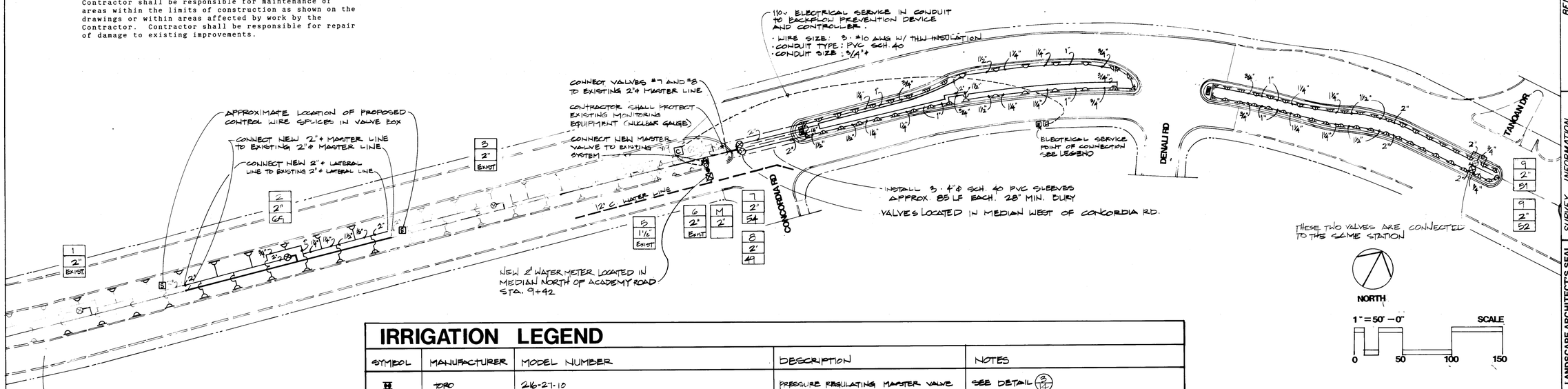

IRRIGATION LEGEND

SYMBOL	MANUFACTURER	MODEL NUMBER	DESCRIPTION	NOTES
	TORO	216-27-10	PRESSURE REGULATING MASTER VALVE	SEE DETAIL 3/14
	TORO	216 SERIES	REMOTE CONTROL VALVE	SEE DETAIL 4/14 SIZE AS INDICATED
			EXISTING VALVE TO REMAIN	
	CHAMPION	100RS-200	STRAIGHT MANUAL VALVE 2"ϕ	SEE DETAIL 2/14
	FEBCO	825Y 1½"	1½"ϕ REDUCED PRESSURE BACKFLOW PREVENTER	SEE DETAIL 1/14
	RAIN BIRD	CIC-12 AND CIC-8 W/ RELAY	COMPUTER CONTROLLER IN CONC. VAULT	RELOCATE CONC. CONTROLLER VAULT AND CONTROLLER FROM EXISTING LOCATION NEAR DENALI RD TO LOCATION AS SHOWN ON THIS SHEET.
			2" WATER METER	
	TORO	5600C-180-6.0, 5600C-FC-3.0	GEAR DRIVEN ROTARY SPRINKLER	36' TYPICAL TRIANGULAR SPACING SEE 7/14
	TORO	570C-4P-15'-H-R 570C-4P-15-Q-FC		15' TYPICAL SPACING SEE 7/14 USE ADJUSTABLE ARC NOZZLE AS REQUIRED
			EXISTING HEAD TO REMAIN	
			EXISTING LATERAL LINE TO REMAIN	
			EXISTING MASTER LINE TO REMAIN	
		2½"ϕ SCHEDULE 40 PVC	MASTER LINE	24" BURY
		SCHEDULE 40 PVC PIPE	LATERAL LINE SIZE AS INDICATED	18" BURY
		2"ϕ SCHEDULE 40 PVC PIPE	MAIN LINE	28" BURY LOCATED BETWEEN WATER METER AND REDUCED PRESSURE BACKFLOW PREVENTER
VALVE NUMBER / VALVE SIZE / VALVE DEMAND (GPM)				
E			EXISTING ELECTRICAL SERVICE PEDESTAL	
E			110 ELECTRIC SERVICE DISCONNECT ON PEDESTAL	RELOCATE EXISTING ELEC. DISCONNECT FROM CONTROLLER VAULT TO NEW LOCATION AT EXISTING ELECTRICAL SERVICE PEDESTAL
S	BROOKS	2200	WIRE SPLICE IN VALVE BOX	INSTALL WIRE SPLICES WITHIN VALVE BOX. INSTALL BOX AS SHOWN IN DETAIL 2/14

AS BUILT INFORMATION
CONTRACTOR Albuq. Underground
WORK STAKED BY DATE
INSPECTOR'S ACCEPTANCE BY S. May 4 DATE 6/40
FIELD VERIFICATION BY DATE
DRAWINGS CORRECTED BY DATE
MICRO-FILM INFORMATION
RECORDED BY DATE
NO

BENCH MARKS
ACS 8-B21 ELEV. 5702.26
Bench mark station is marked on 3 1/4" aluminum cap and is located at the north top of curb of Academy Rd. N.E. approximately 375' feet west of Eubank Blvd.
Note:
All elevations shown on plan & profile shall be adjusted by a value of -0.035.

SURVEY INFORMATION
FIELD NOTES

NO.	BY	DATE

LANDSCAPE ARCHITECT'S SEAL

NO.	DATE	REMARKS	BY
		REVISIONS	

DESIGNED BY COPA DATE 7-15-88
DRAWN BY DATE 7-15-88
CHECKED BY VSP DATE 7-15-88

RECORD DRAWING
Date: 9-26-89

Campbell Okuma Perkins Associates, Inc.
Landscape Architecture and Site Planning
418 Central S.E. Albuquerque, NM 87102 (505) 242-9928
1330 Penhow Dr. & Santa Fe, NM 87501 (505) 982-6366

CITY OF ALBUQUERQUE
PUBLIC WORKS DEPARTMENT
ENGINEERING GROUP

TITLE: ACADEMY RD. WATER, SAS & DRAINAGE REHABILITATION
CONCORDIA RD. TO DENALI RD.
IRRIGATION IMPROVEMENTS

APPROVALS	ENGINEER	DATE	APPROVALS	ENGINEER	DATE
D.R.C. Chair		11/18/88	HYDROLOGY	N/A	10-21-88
Trans. Dev.					
Utility Dev.		11/16/88			
Parks	Diane Okuma	10-17-88			

DRAWING NO. 3344 | MAP NO. E-21 | SHEET 13 OF 16

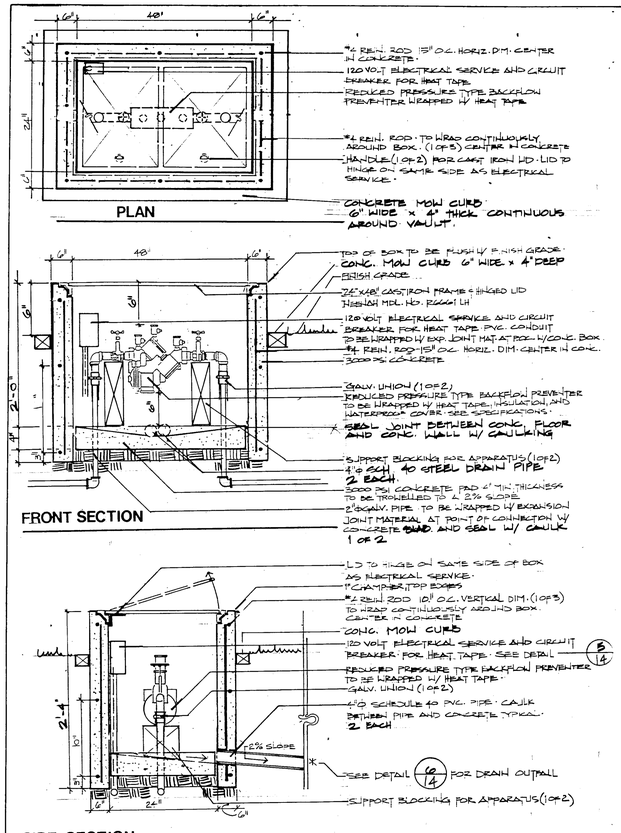

SIDE SECTION

1/14 BACKFLOW PREVENTION DEVICE - BELOW GROUND

N.T.S.

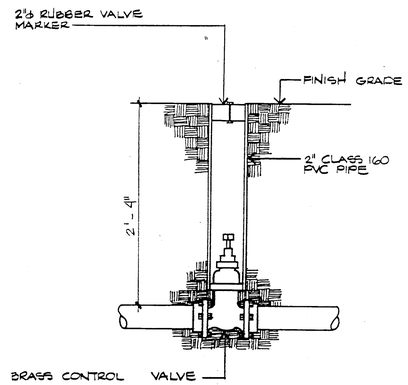

NOTE:
PROVIDE (2) 54" CONTROL VALVE KEYS.
LOCATION TO BE APPROVED BY THE LANDSCAPE ARCHITECT.

SECTION

2/14 CONTROL VALVE

NTS

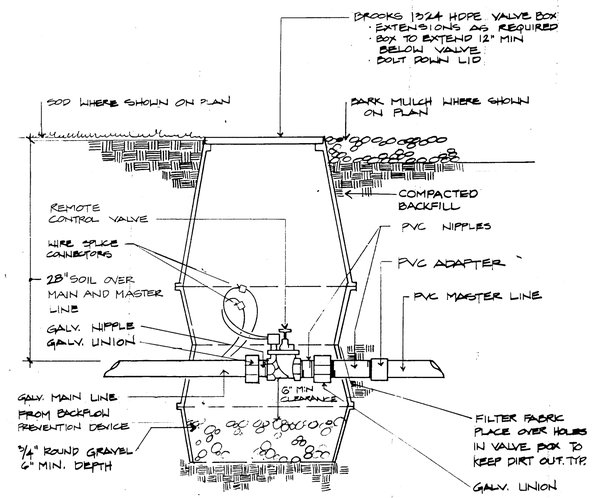

SECTION

3/14 MASTER VALVE

NTS

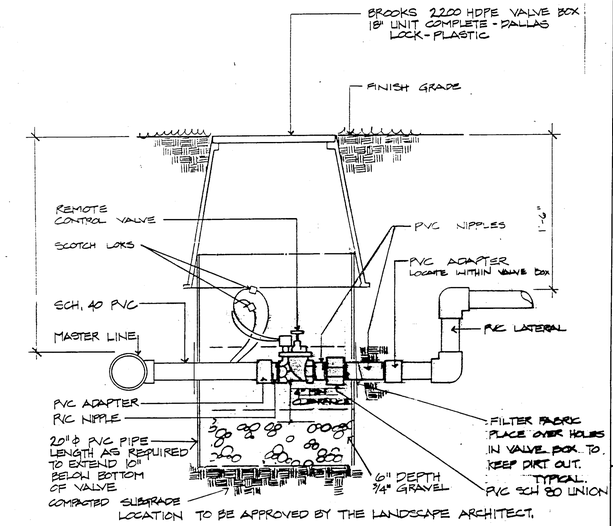

SECTION

4/14 REMOTE CONTROL VALVE

NTS

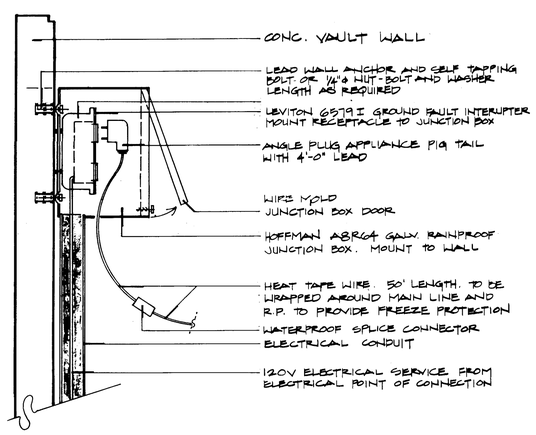

SECTION

5/14 ELECTRICAL SERVICE FOR HEAT TAPE

N.T.S.

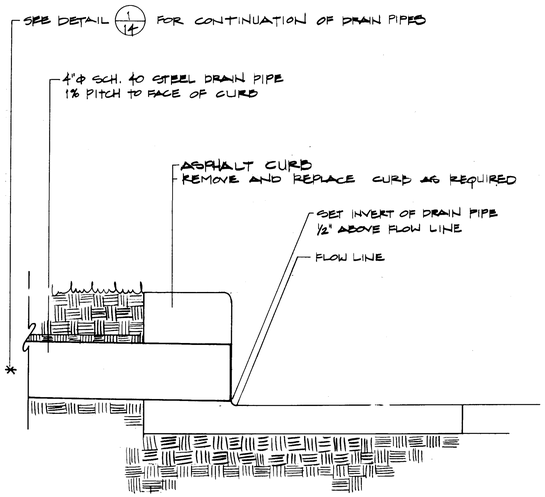

SECTION

6/14 BACKFLOW PREVENTION DEVICE DRAIN OUTFALL

N.T.S.

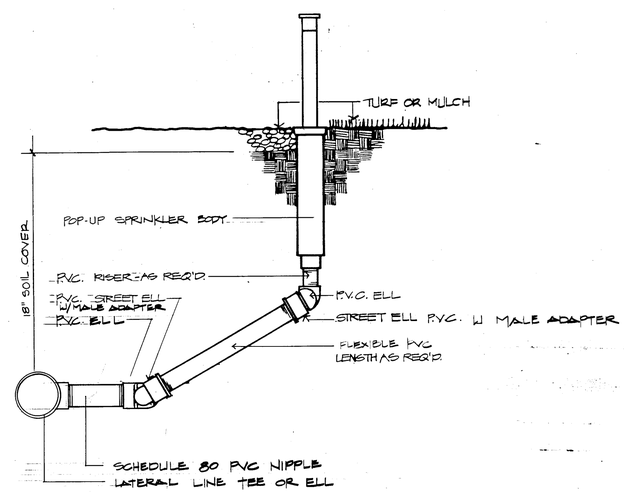

SECTION

7/14 POP-UP SPRAY SPRINKLER

N.T.S.

26 3344 1490

RECORD DRAWING
Date: 9-26-89

AS BUILT INFORMATION
CONTRACTOR Albuq. Underground
WORK STAKED BY DATE
INSPECTOR'S ACCEPTANCE BY S. Hoyt DATE 11/ad
FIELD VERIFICATION BY DATE
DRAWINGS CORRECTED BY DATE
MICRO-FILM INFORMATION
RECORDED BY DATE
NO

BENCH MARKS
ACS 8-B21 ELEV. 5702.26
Bench mark station is marked on 3 1/4" aluminum cap and is located at the north top of curb of Academy Rd. N.E. approximately 375' feet west of Eubank Blvd.
Note:
All elevations shown on plan & profile shall be adjusted by a value of -0.035.

SURVEY INFORMATION
FIELD NOTES
NO. BY DATE

REVISIONS
NO. DATE REMARKS BY
DESIGNED BY COPA DATE 7-15-88
DRAWN BY DATE 7-15-88
CHECKED BY WSP

CITY OF ALBUQUERQUE
PUBLIC WORKS DEPARTMENT
ENGINEERING GROUP

TITLE: ACADEMY RD. WATER, SAS & DRAINAGE REHABILITATION
CONCORDIA RD. TO DENALI RD.
IRRIGATION DETAILS

APPROVALS	ENGINEER	DATE	APPROVALS	ENGINEER	DATE
D.R.C. Chair	[illegible]	11/18/88	Hydrology	N/A	10-21-88
Trans. Dev.	[illegible]	[illegible]			
Utility Dev.	[illegible]	11/16/88			
Parks	[illegible]	10/17/88			

DRAWING NO.	MAP NO.	SHEET	OF
3344	E-21	14	16

PLANT LIST

SYMBOL	APPROX. QTY.	NAME	SIZE	CONDITION	NOTES
CF	—	CRATAEGUS PHAENOPYRUM WASHINGTON HAWTHORN	2½" CAL. PER	30" BOX	1
EA	7	ELAEAGNUS ANGUSTIFOLIA RUSSIAN OLIVE 'SILVER'	SEE NOTES	30" BOX	1, 3
KP	3	KOELREUTERIA PANICULATA GOLDEN RAIN TREE	2" CAL.	24" BOX OR 55 GALLON CONT.	1
MSS	10	MALUS 'SPRING SNOW' SPRING SNOW CRABAPPLE	2" CAL.	24" BOX OR 55 GALLON CONT.	1
PS	3	PINUS SYLVESTRIS SCOTCH PINE	10@8' 10@4'	BOXED	2
RA'I'	9	ROBINIA AMBIGUA 'IDAHOENSIS' PINK FLOWERING LOCUST	2" CAL.	30" BOX	1
GT1	—	GLEDITSIA TRIACANTHOS INERMIS THORNLESS HONEY LOCUST	2½" CAL	3" BOX	

NOTES PER PLANT LIST

1. PLANT PER DETAIL 3/14
2. PLANT PER DETAIL 4/14
3. MULTI-TRUNK - 3 TRUNK MIN. LARGEST TRUNK TO BE 2½" CAL. PER MINIMUM.

CONSTRUCTION NOTES

1. REGRADE MEDIAN WHERE DAMAGED PER DETAIL 1/15
2. REGRADE MEDIAN WHERE DAMAGED PER DETAIL 2/15
3. INSTALL CONCRETE SWALE PER DETAIL 5/15
4. INSTALL POND LINER/ DRAINAGE SYSTEM PER DETAIL 5/15 CONCRETE DRAIN SWALE IS TO BE FLUSH WITH ADJACENT CURB.
5. REMOVE EXISTING SOD IN AREA AND REPLACE WITH NEW SOD
6. INSTALL NEW MEDIAN CURB & GUTTER. SEE SHEETS 7 AND 9.
7. LIMIT OF CONSTRUCTION
8. PROTECT EXISTING TREES & REPAIR SOD AS REQUIRED IN VICINITY OF IRRIGATION SYSTEM CONNECTION. SEE IRRIGATION PLAN.
9. PROTECT EXISTING SOD, TREES, AND IRRIGATION SYSTEM OUTSIDE OF LIMITS OF CONSTRUCTION AS SHOWN ON THIS SHEET. REPAIR ALL DAMAGE TO EXISTING IMPROVEMENTS OUTSIDE CONSTRUCTION LIMITS AT NO COST TO THE OWNER. TREE REPLACEMENT AND SOD REPAIR OUTSIDE THE CONSTRUCTION LIMITS AS REQUIRED SHALL BE INCIDENTAL TO OTHER COSTS.
10. IRRIGATION DRAIN SYSTEM WITH CONCRETE APRON SEE SHEETS 7 & 8.
11. PROVIDE A TRANSITION TO CONCRETE DRAIN SWALE SO AS TO EFFECTIVELY CARRY DRAINAGE WATER ONTO APRON AND INTO STRUCTURE. SEE SHEET 9 FOR DETAIL A/9 FOR INTERCONNECTION BETWEEN POLYETHELENE DRAIN PIPE AND DOWNSTREAM DRAINAGE SYSTEM.
12. APPROXIMATE LOCATION OF RELATIVE HIGH POINT IN DRAIN SWALE. SWALE TO DRAIN FROM THIS LOCATION TO LOCATION IDENTIFIED BY NOTE 11.

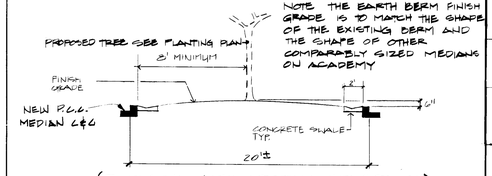

(DIMENSIONS & GRADES PER PAVING P&P - SHEET NO. 7)

1/15 20 FOOT WIDE MEDIAN SECTION

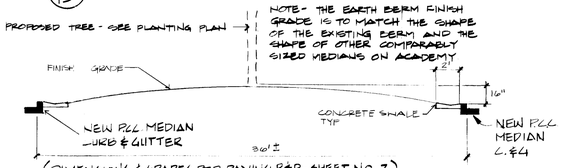

(DIMENSIONS & GRADES PER PAVING P&P - SHEET NO. 7)

2/15 36 FOOT WIDE MEDIAN SECTION

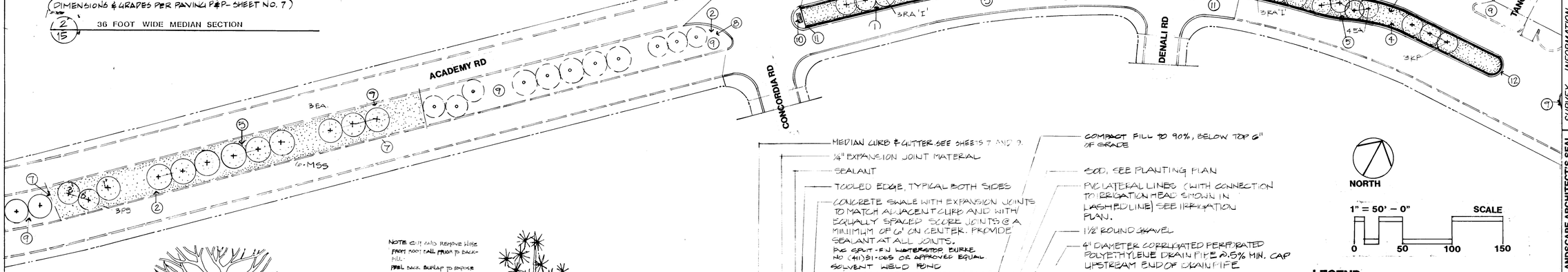

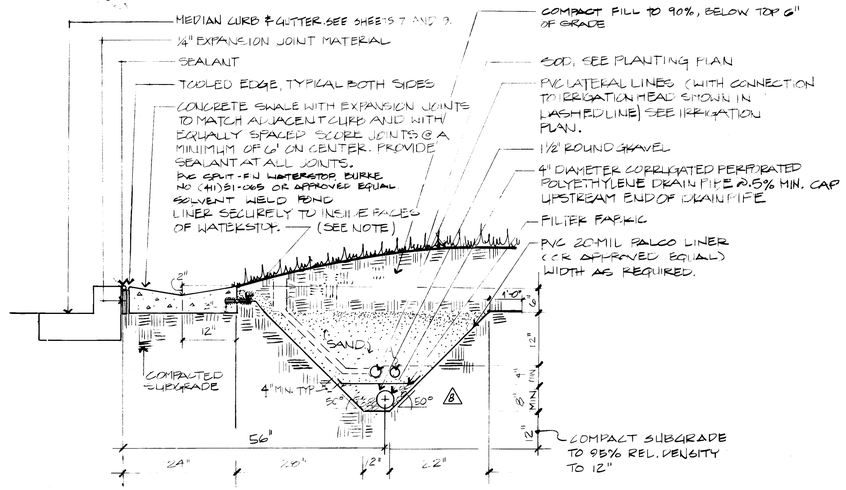

LEGEND

	EXISTING TO REMAIN	NEW
CURB & GUTTER		
TREES		
SOD		
CONCRETE SWALE		

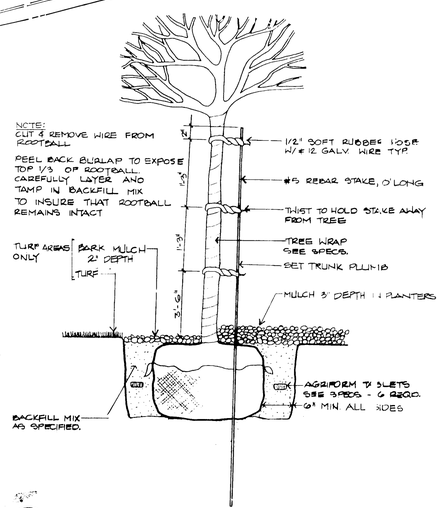

3/15 TREE PLANTING DETAIL N.T.S.

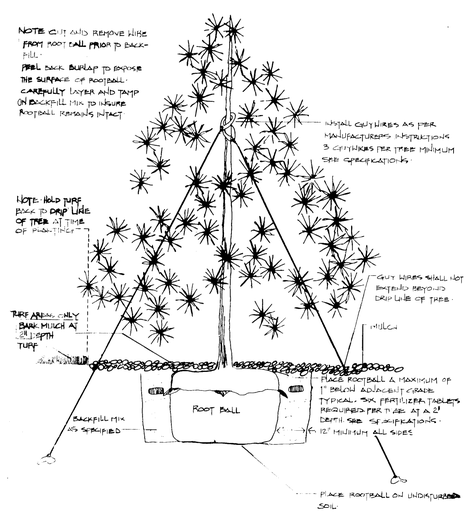

4/15 EVERGREEN TREE PLANTING DETAIL L N.T.S.

NOTES

1. SEE DETAIL A/9 FOR INTERCONNECTION BETWEEN POLYETHELENE DRAIN PIPE AND DOWNSTREAM DRAINAGE SYSTEM.
2. SECURELY ATTACH POND LINER TO WATERSTOP WITH FALCO P-70 ADHESIVE INSTALLED AS PER MFG. INSTRUCTIONS
3. PROVIDE A MINIMUM DEPTH OF 1" SAND OVER THE ENTIRE AREA OF POND LINER
4. LOCATE ALL LATERAL IRRIGATION LINES ABOVE POND LINER AS PORTRAYED IN ABOVE TYPICAL.

5/15 LEAKAGE DRAIN SYSTEM
SYMMETRICAL ALONG CONSTRUCTION ℄

RECORD DRAWING
Date: 9-26-89

RECORD DRAWING Maps & Records

Campbell Okuma Perkins Associates, Inc.
Landscape Architecture and Site Planning
418 Central S.E. Albuquerque, NM 87106 (505) 242-9626
3336 Pacheco No. 8 Santa Fe NM 87505 (505) 982-5309

AS BUILT INFORMATION
CONTRACTOR Abbey Underground
WORK STAKED BY
WORK STAKED ACCEPTANCE BY S. Moya DATE 11/90
FIELD VERIFICATION BY
DRAWINGS CORRECTED BY
DATE
MICRO-FILM INFORMATION
RECORDED BY
DATE
NO

BENCH MARKS
ACS 8-E21 ELEV. 5702.26
Bench mark section is marked on 3 1/4" aluminum cap and is located at the north top of curb of Academy Rd. N.E. approximately 375' feet west of Eubank Blvd.
Note:
All elevations shown on plan & profile shall be adjusted by a value of -0.035.

SURVEY INFORMATION
FIELD NOTES

NO.	BY	DATE

LANDSCAPE ARCHITECT'S SEAL

NO.	DATE	REMARKS	BY
3	3-27-89	REV CHANGE TO 50" (FROM 45°)	R.P.

REVISIONS

DESIGN
DESIGNED BY COPA DATE 7-15-88
DRAWN BY DATE 7-15-88
CHECKED BY WGSP DATE 7-15-88

CITY OF ALBUQUERQUE
PUBLIC WORKS DEPARTMENT
ENGINEERING GROUP

TITLE: ACADEMY RD. WATER, SAS & DRAINAGE REHABILITATION
CONCORDIA RD. TO DENALI RD.
PLANTING IMPROVEMENTS

APPROVALS	ENGINEER	DATE	APPROVALS	ENGINEER	DATE
D.R.C. Chair		11/16/88	Hydrology	N/A	10-21-88
Trans. Dev.					
Utility Dev.	PEDD	11/16/88			
Parks & Rec.	Diane Ocana	10/17/90			

DRAWING NO.	MAP NO.	SHEET	OF
3344	E-21	15	16

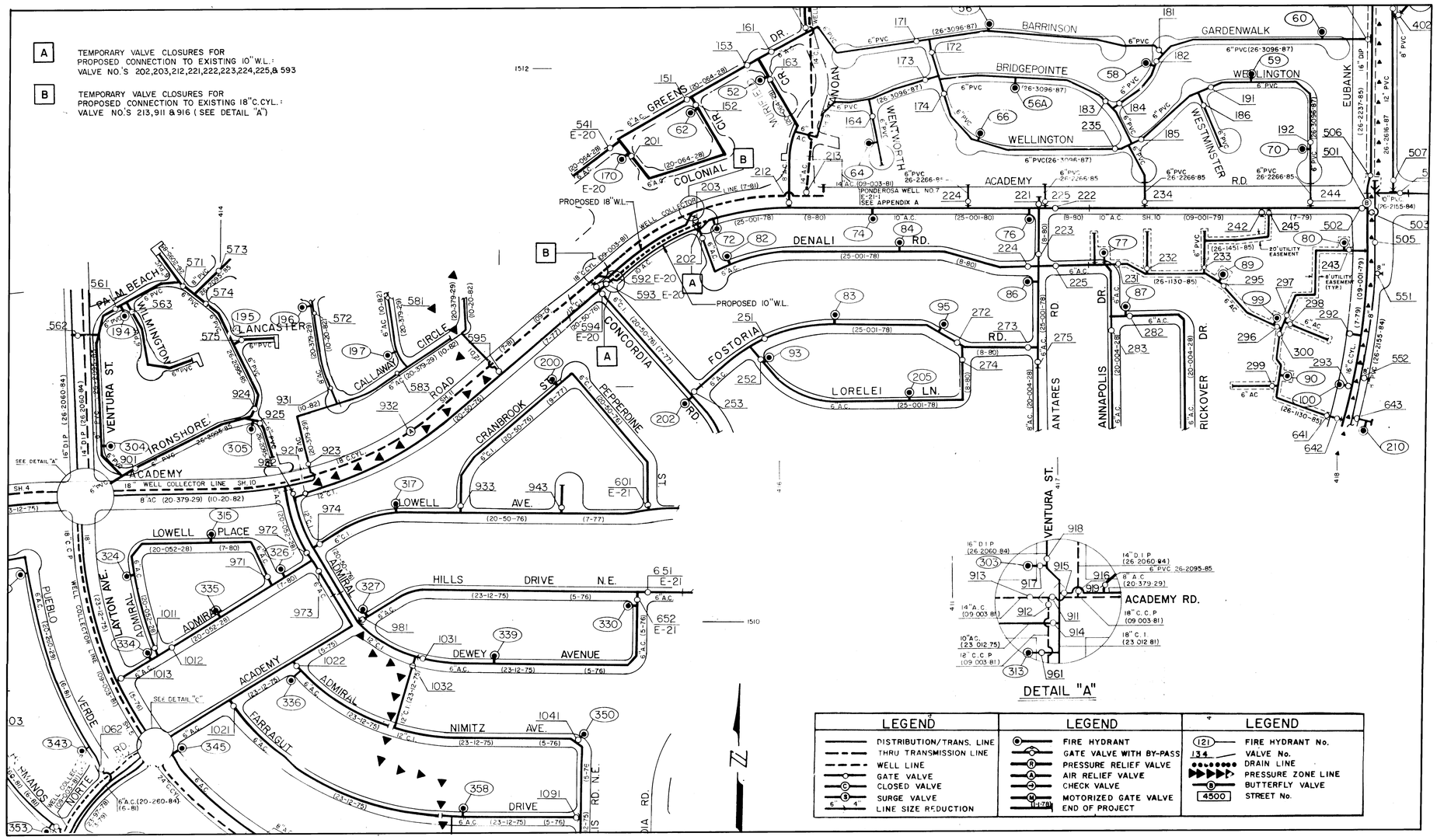

RECORD DRAWING
Date: 9-26-89

AS BUILT INFORMATION

CONTRACTOR Albuq. Underground
WORK STAKED BY
INSPECTORS DATE
ACCEPTANCE BY S. Moya DATE 11/10
FIELD VERIFICATION BY
DATE
DRAWINGS CORRECTED BY
DATE
MICRO-FILM INFORMATION
RECORDED BY DATE
NO

BENCH MARKS

ACS 8-E21 ELEV. 5702.26
Bench mark station is marked on 3 1/4" aluminum cap and is located at the north top of curb of Academy Rd. N.E. approximately 375' feet west of Eubank Blvd.
Note:
All elevations shown on plan & profile shall be adjusted by a value of -0.035.

SURVEY INFORMATION

FIELD NOTES

NO.	BY	DATE
25-82	L. Kramer	Sep. 1982

ENGINEER'S SEAL

NEW MEXICO REGISTERED PROFESSIONAL ENGINEER 5032 RAYMOND PANG
11-10-88

NO.	DATE	REMARKS	BY

REVISIONS

DESIGN
DESIGNED BY Ray Pang DATE August 1988
DRAWN BY A. Salas DATE August 1988
CHECKED BY Ray Pang DATE August 1988

CITY OF ALBUQUERQUE
PUBLIC WORKS DEPARTMENT
ENGINEERING GROUP

TITLE: ACADEMY RD. WATER, SAS & DRAINAGE REHABILITATION
CONCORDIA RD. TO DENALI RD.
WATER SHUT-OFF PLAN

APPROVALS	ENGINEER	DATE	APPROVALS	ENGINEER	DATE
D.R.C. Chair		11/16/88			
Trans. Dev.					
Utility Dev.		11/16/88			
Hydrology	N/A RAP	10-21-88			

DRAWING NO.	MAP NO.	SHEET	OF
3344	E-21	16	16