CITY OF ALBUQUERQUE , NEW MEXICO

WATER RESOURCES DEPARTMENT

WASTEWATER TREATMENT FACILITY

IMPROVEMENTS - PHASE IIB - 3

CONTRACT 1

INTERIM SLUDGE DEWATERING FACILITIES

APPROVED BY

David R Brosman

DAVID R. BROSMAN, P.E.
MANAGER, LIQUID WASTE SYSTEMS DIVISION
WATER RESOURCES DEPARTMENT

RECORD DRAWING

DATE:	DRAFTED BY:
AUG. 1988	MCA

THESE RECORD DRAWINGS HAVE BEEN PREPARED, IN PART, ON THE BASIS OF INFORMATION COMPILED AND FURNISHED BY OTHERS. THE ENGINEER WILL NOT BE RESPONSIBLE FOR ANY ERRORS OR OMISSIONS WHICH HAVE BEEN INCORPORATED INTO THIS DOCUMENT AS A RESULT.

REGISTERED PROFESSIONAL ENGINEER AND LAND SURVEYOR NEW MEXICO DAYTON F. HOLSEN

1 2 3 4 5 6 7 8 9 10 11 12 13 14 15 16 17 18 19 20 21 22 23 24 25 26 27 28 29

2 6 3 6 9 4 0 1 8

NO.	DATE	REVISIONS	APPROVED

DESIGNED LMR
DRAWN RJ
CHECKED LMR
APPROVED
APPROVED
DATE

MOLZEN-CORBIN
STANLEY CONSULTANTS
A JOINT VENTURE

NONE
GRAPHIC SCALE

CITY OF ALBUQUERQUE, NEW MEXICO
SOLIDS HANDLING FACILITIES
PHASE II B-3, CONTRACT 1

INTERIM SLUDGE DEWATERING FACILITIES
TITLE SHEET

M-C NO. 832221
G-01
1 of 112
SC NO.

82624

DRAWINGS INDEX

GENERAL

G-01	TITLE SHEET
G-02	DRAWINGS INDEX
G-03	SITE PLAN
G-04	YARD PIPING PLAN
G-05	YARD PIPING PLAN
G-06	YARD PIPING PLAN
G-07	YARD PIPING DETAILS
G-08	YARD PIPING DETAILS
G-09	YARD PIPING PROFILES
G-10	PAVING PLAN
G-11	PAVING SECTIONS & DETAILS
G-12	STANDARD SYMBOLS

STRUCTURAL

S-01	DEWATERING BUILDING - FOUNDATION PLAN AND SECTIONS
S-02	DEWATERING BUILDING - GROUND FLOOR PLAN
S-03	DEWATERING BUILDING - SECOND FLOOR PLAN
S-04	DEWATERING BUILDING - ROOF PLAN
S-05	SLUDGE LOADING AREA - FOUNDATION PLAN AND DETAILS
S-06	SLUDGE LOADING AREA - FRAMING PLANS
S-07	SLUDGE LOADING AREA - FRAMING ELEVATIONS
S-08	BIN FEED CONVEYOR - ENCLOSURE DETAILS
S-09	DEWATERING BUILDING - BUILDING SECTION
S-10	DEWATERING BUILDING - BUILDING SECTIONS AND DETAILS
S-11	DEWATERING BUILDING - MISCELLANEOUS SECTIONS AND DETAILS
S-12	DEWATERING BUILDING - PLATFORM AND STAIR DETAILS SHEET 1
S-13	DEWATERING BUILDING - PLATFORM AND STAIR DETAILS SHEET 2
S-14	DEWATERING BUILDING - FRAME SECTION - BEAMS RB-2 AND FB-8
S-15	DEWATERING BUILDING - FRAME SECTION - BEAMS RB-1 AND FB-9, 12
S-16	DEWATERING BUILDING - FRAME SECTION AND BEAM DETAILS
S-17	DEWATERING BUILDING - POLYMER TANK PLATFORM PLAN, SECTION, DETAILS
S-18	GENERAL NOTES
S-19	STANDARD STAIR DETAILS
S-20	STANDARD HANDRAIL DETAILS
S-21	STRUCTURAL STANDARDS

ARCHITECTURAL

A-01	LANDSCAPE PLAN
A-02	GROUND FLOOR PLAN
A-03	SECOND FLOOR PLAN
A-04	ELEVATIONS
A-05	SECTIONS AND DETAILS
A-06	ROOF PLAN
A-07	SECOND FLOOR REFLECTED CEILING PLAN
A-08	MEZZANINE FLOOR PLAN
A-09	BUILDING SECTION
A-10	DETAILS

MECHANICAL

M-01	DEWATERING BUILDING - PROCESS EQUIPMENT AND PIPING - GROUND FLOOR PLAN
M-02	DEWATERING BUILDING - PROCESS EQUIPMENT AND PIPING - SECOND FLOOR PLAN
M-03	DEWATERING BUILDING - PROCESS EQUIPMENT - SECTIONS
M-04	DEWATERING BUILDING - PROCESS EQUIPMENT - SECTIONS
M-05	DEWATERING BUILDING - PROCESS EQUIPMENT - SECTIONS
M-06	DEWATERING BUILDING - PROCESS EQUIPMENT - SECTIONS
M-07	DEWATERING BUILDING - PROCESS EQUIPMENT - SECTIONS
M-08	DEWATERING BUILDING - PROCESS EQUIPMENT - SECTIONS
M-09	DEWATERING BUILDING - PROCESS EQUIPMENT - SECTIONS
M-10	DEWATERING BUILDING - PROCESS EQUIPMENT - SECTIONS AND DETAILS
M-11	DEWATERING BUILDING - PROCESS EQUIPMENT - PROCESS EQUIPMENT SCHEMATIC
M-12	DEWATERING BUILDING - PROCESS EQUIPMENT - POLYMER PROCESS SCHEMATIC
M-13	DEWATERING BUILDING - PROCESS EQUIPMENT - SCHEMATICS AND DETAILS
M-14	DEWATERING BUILDING - PROCESS EQUIPMENT - POLYMER MIX TANK AND CALIBRATION CHAMBER AND MISC DETAILS
M-15	DEWATERING BUILDING - PROCESS EQUIPMENT - CENTRIFUGE SOLIDS AND LIQUID CHUTE AND METER MANHOLE DETAILS
M-16	DEWATERING BUILDING - PROCESS EQUIPMENT - MISC DETAILS
M-17	DEWATERING BUILDING - PROCESS EQUIPMENT - PIPING SPECIFICATIONS AND STANDARDS
M-18	DEWATERING BUILDING - PROCESS EQUIPMENT - PUMP AND PIPE SCHEDULES

PLUMBING

P-01	DEWATERING BUILDING - BUILDING PLUMBING SYSTEM - GROUND FLOOR PLAN
P-02	DEWATERING BUILDING - BUILDING PLUMBING SYSTEM - SECOND FLOOR PLAN AND SECTION

INSTRUMENTATION

I-01	INSTRUMENTATION LEGEND
I-02	P & ID SLUDGE SUPPLY
I-03	P & ID POLYMER SUPPLY
I-04	P & ID CENTRIFUGE NO. 1
I-05	P & ID CENTRIFUGE NO. 2
I-06	P & ID CENTRIFUGE NO. 3
I-07	P & ID STORAGE BINS AND STANDBY PUMPS
I-08	LOOP DIAGRAMS
I-09	LOOP DIAGRAMS
I-10	LOOP DIAGRAMS
I-11	LOOP DIAGRAMS
I-12	LOOP DIAGRAMS
I-13	LOOP DIAGRAMS
I-14	INSTRUMENTATION GROUND FLOOR PLAN
I-15	INSTRUMENTATION SECOND FLOOR PLAN
I-16	INSTRUMENTATION - DIGESTERS 2 -12
I-17	CENTRIFUGE CONTROL PANEL 1, 2, 3
I-18	INTEGRATED CONTROL PANEL 1
I-19	INTEGRATED CONTROL PANEL 2
I-20	PCU MODULE LAYOUT

HEATING, VENTILATION AND AIR CONDITIONING

H-01	DEWATERING BUILDING - HVAC GROUND FLOOR PLAN
H-02	DEWATERING BUILDING - HVAC SECOND FLOOR PLAN
H-03	DEWATERING BUILDING - HVAC SECTIONS AND DETAILS
H-04	DEWATERING BUILDING - HVAC HEATING WATER PIPING SCHEMATIC
H-05	DEWATERING BUILDING - MECHANICAL STANDARDS AND EQUIPMENT SCHEDULES - SHEET 1
H-06	DEWATERING BUILDING - HVAC EQUIPMENT SCHEDULES
H-07	ODOR CONTROL AREA - PLAN AND DETAILS
H-08	ODOR CONTROL AREA - SECTIONS AND DETAILS

ELECTRICAL

E-01	ELECTRICAL LEGEND
E-02	LIGHTING - GROUND FLOOR PLAN
E-03	LIGHTING - SECOND FLOOR PLAN
E-04	LIGHTING - MEZZANINE
E-05	POWER & CONTROL - GROUND FLOOR PLAN
E-06	POWER & CONTROL - SECOND FLOOR PLAN
E-07	POWER & CONTROL - MEZZANINE
E-08	POWER & CONTROL - DIGESTERS 2 - 12
E-09	SCHEMATICS
E-10	SCHEMATICS
E-11	SCHEMATICS
E-12	SCHEMATICS
E-13	SCHEMATICS
E-14	PANELBOARDS, PANEL DETAILS
E-15	ELECTRICAL DETAILS
E-16	MCC #30 SCHEDULE
E-17	MCC #31 SCHEDULE
E-18	MCC TERMINAL BOARD
E-19	DUCT BANK DETAILS
E-20	ELECTRICAL MANHOLE AND TRANSFORMER PAD DETAILS
E-21	ONE-LINE DIAGRAMS

RECORD DRAWING

DATE: AUG. 1988 | DRAFTED BY: MCA

THESE RECORD DRAWINGS HAVE BEEN PREPARED, IN PART, ON THE BASIS OF INFORMATION COMPILED AND FURNISHED BY OTHERS. THE ENGINEER WILL NOT BE RESPONSIBLE FOR ANY ERRORS OR OMISSIONS WHICH HAVE BEEN INCORPORATED INTO THIS DOCUMENT AS A RESULT.

REGISTERED PROFESSIONAL ENGINEER AND LAND SURVEYOR NEW MEXICO DAYTON T. McCLEEN

1 2 3 4 5 6 7 8 9 10 11 12 13 14 15 16 17 18 19 20 21 22 23 24 25 26 27 28 29
2 6 3 6 9 4 0 2 8 8

NO.	DATE	REVISIONS	APPROVED

DESIGNED LMR
DRAWN RA
CHECKED LMR
APPROVED
APPROVED
DATE

MOLZEN-CORBIN
STANLEY CONSULTANTS
A JOINT VENTURE

NONE
GRAPHIC SCALE

CITY OF ALBUQUERQUE, NEW MEXICO
SOLIDS HANDLING FACILITIES
PHASE II B-3, CONTRACT 1

INTERIM SLUDGE DEWATERING FACILITIES
DRAWINGS INDEX

M-C NO. 832221
G-02
2 OF 112
SC NO.

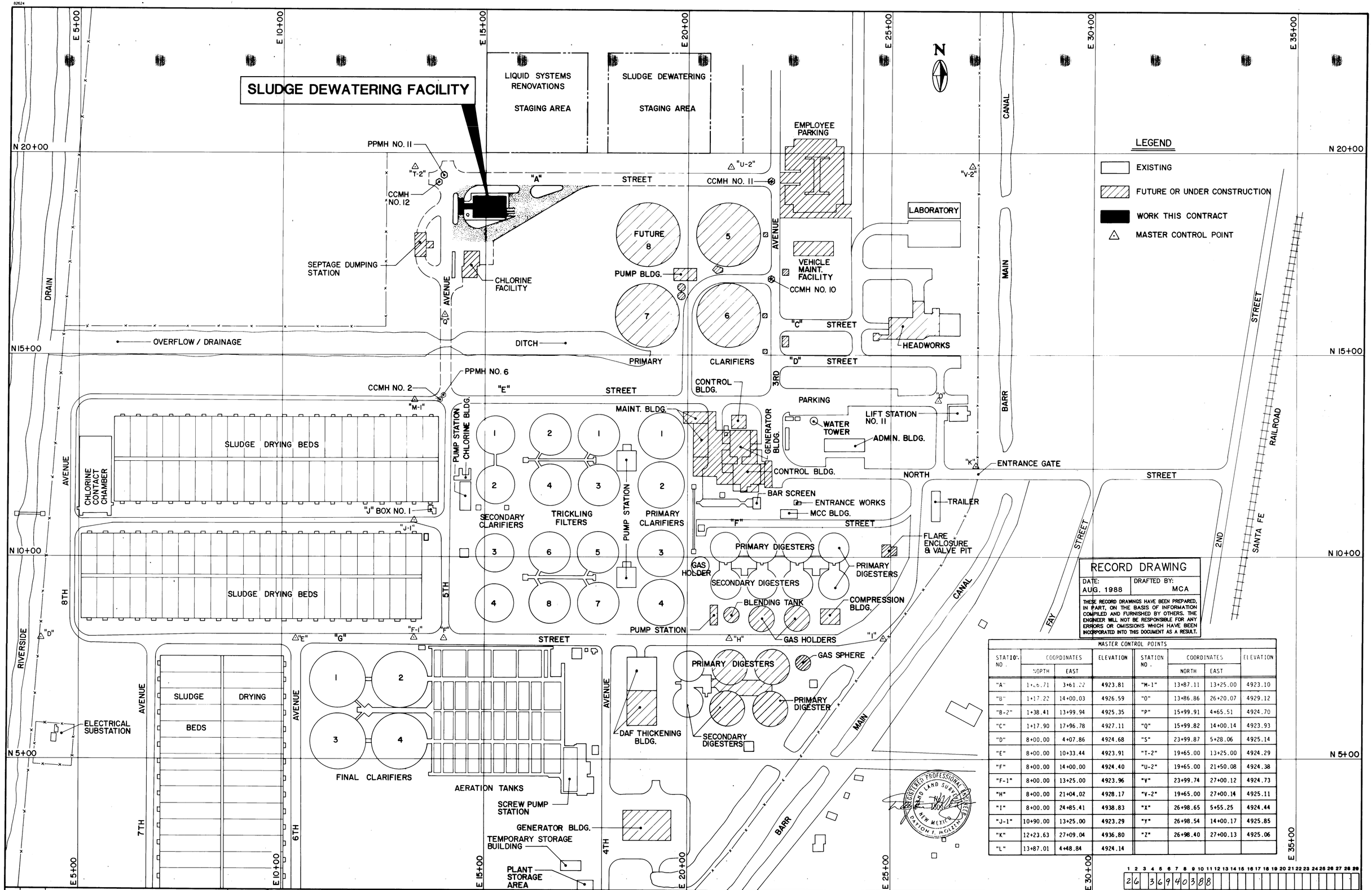

RECORD DRAWING

DATE:	DRAFTED BY:
AUG. 1988	MCA

THESE RECORD DRAWINGS HAVE BEEN PREPARED, IN PART, ON THE BASIS OF INFORMATION COMPILED AND FURNISHED BY OTHERS. THE ENGINEER WILL NOT BE RESPONSIBLE FOR ANY ERRORS OR OMISSIONS WHICH HAVE BEEN INCORPORATED INTO THIS DOCUMENT AS A RESULT.

MASTER CONTROL POINTS

STATION NO.	COORDINATES NORTH	COORDINATES EAST	ELEVATION	STATION NO.	COORDINATES NORTH	COORDINATES EAST	ELEVATION
"A"	1+26.71	3+61.22	4923.81	"M-1"	13+87.11	13+25.00	4923.10
"B"	1+17.22	14+00.03	4926.59	"O"	13+86.86	26+20.07	4929.12
"B-2"	1+38.41	13+99.94	4925.35	"P"	15+99.91	4+65.51	4924.70
"C"	1+17.90	17+96.78	4927.11	"Q"	15+99.82	14+00.14	4923.93
"D"	8+00.00	4+07.86	4924.68	"S"	23+99.87	5+28.06	4925.14
"E"	8+00.00	10+33.44	4923.91	"T-2"	19+65.00	13+25.00	4924.29
"F"	8+00.00	14+00.00	4924.40	"U-2"	19+65.00	21+50.08	4924.38
"F-1"	8+00.00	13+25.00	4923.96	"V"	23+99.74	27+00.12	4924.73
"H"	8+00.00	21+04.02	4928.17	"V-2"	19+65.00	27+00.14	4925.11
"I"	8+00.00	24+85.43	4938.83	"X"	26+98.65	5+55.25	4924.44
"J-1"	10+90.00	13+25.00	4923.29	"Y"	26+98.54	14+00.17	4925.85
"K"	12+23.63	27+09.04	4936.80	"Z"	26+98.40	27+00.13	4925.06
"L"	13+87.01	4+48.84	4924.14				

1 2 3 4 5 6 7 8 9 10 11 12 13 14 15 16 17 18 19 20 21 22 23 24 25 26 27 28 29
26 3 6 9 4 0 3 8 8

NO.	DATE	REVISIONS	APPROVED

DESIGNED LMR
DRAWN RA
CHECKED LMR
APPROVED
APPROVED
DATE

MOLZEN-CORBIN
STANLEY CONSULTANTS
A JOINT VENTURE

1" = 100'
0 100' 150' 200'
GRAPHIC SCALE

CITY OF ALBUQUERQUE, NEW MEXICO
SOLIDS HANDLING FACILITIES
PHASE II B-3, CONTRACT 1

INTERIM SLUDGE DEWATERING FACILITIES
SITE PLAN

M-C NO. 832221
G-03
3 of 112
SC NO.

82624

LEGEND

C.R.	CENTRATE RETURN
CCMH	CONTROL AND COMMUNICATION MANHOLE
CL_2	CHLORINE
C.M.P.	CORRUGATED METAL PIPE
D.S.	DIGESTED SLUDGE
DR	DRAIN LINE
T	ELECTRICAL TRANSFORMER
F.E.	FINAL EFFLUENT
F.H.	FIRE HYDRANT
G.V.	GATE VALVE
H.W.	HOUSE WATER
M.H.	MANHOLE
N.G.	NATURAL GAS
P.C.O.	PRESSURE CLEANOUT
P.V.	PLUG VALVE
P.W.	POTABLE WATER
PPMH	PRIMARY POWER MANHOLE
R.C.P.	REINFORCED CONCRETE PIPE
S.F.M.	SEPTAGE FORCEMAIN
S.S.	STORM SEWER
T/D	TOP OF ELECTRICAL DUCT - (TYPE VI)
UGE	UNDERGROUND ELECTRICAL
W.W.	WASHWATER

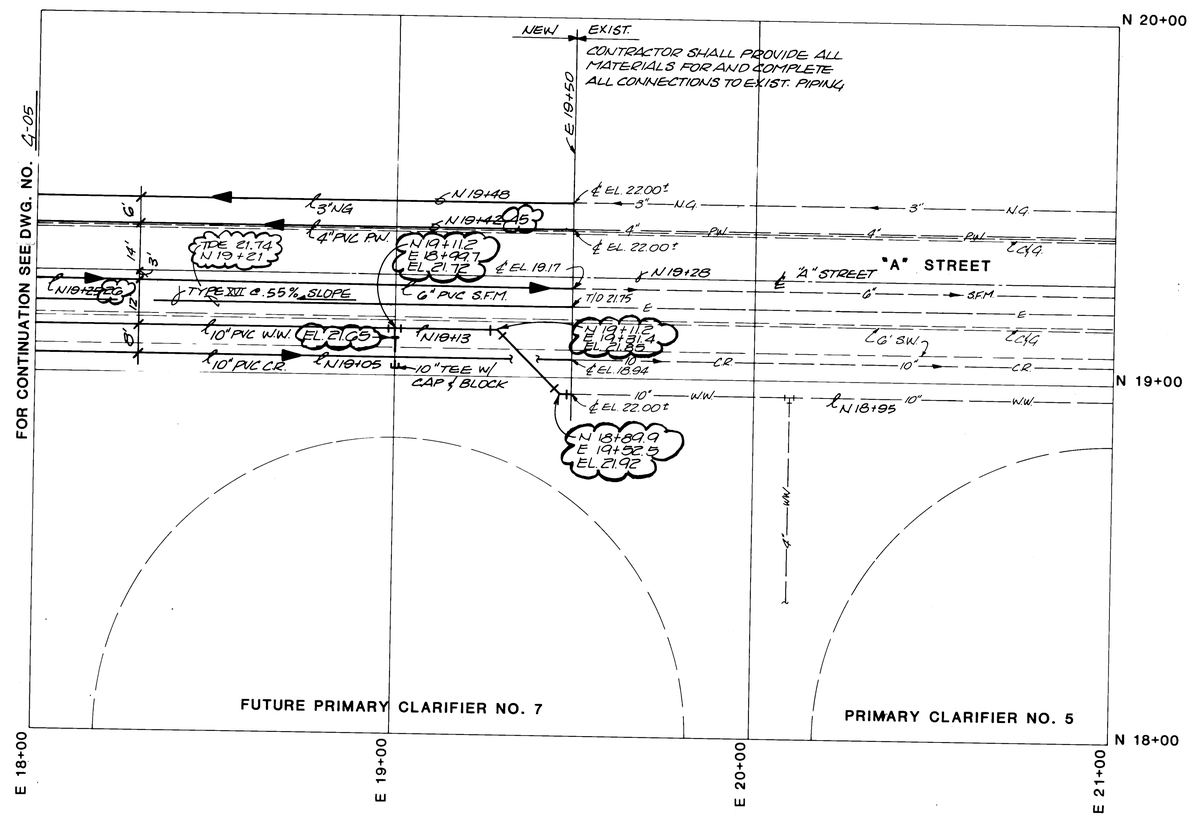

RECORD DRAWING

DATE:	DRAFTED BY:
AUG. 1988	MCA

THESE RECORD DRAWINGS HAVE BEEN PREPARED, IN PART, ON THE BASIS OF INFORMATION COMPILED AND FURNISHED BY OTHERS. THE ENGINEER WILL NOT BE RESPONSIBLE FOR ANY ERRORS OR OMISSIONS WHICH HAVE BEEN INCORPORATED INTO THIS DOCUMENT AS A RESULT.

REGISTERED PROFESSIONAL ENGINEER AND LAND SURVEYOR 1809 NEW MEXICO DAYTON F. MOLZEN

1 2 3 4 5 6 7 8 9 10 11 12 13 14 15 16 17 18 19 20 21 22 23 24 25 26 27 28 29
2 6 3 6 9 4 0 4 8 8

NO.	DATE	REVISIONS	APPROVED

DESIGNED LMR
DRAWN RJ
CHECKED LMR
APPROVED
APPROVED
DATE

MOLZEN-CORBIN
STANLEY CONSULTANTS
A JOINT VENTURE

1" = 20'-0"
0 20' 30' 40'
GRAPHIC SCALE

CITY OF ALBUQUERQUE, NEW MEXICO
SOLIDS HANDLING FACILITIES
PHASE II B-3, CONTRACT 1

INTERIM SLUDGE DEWATERING FACILITIES
YARD PIPING PLAN

M-C NO. 832221
G-04
4 of 112
SC NO.

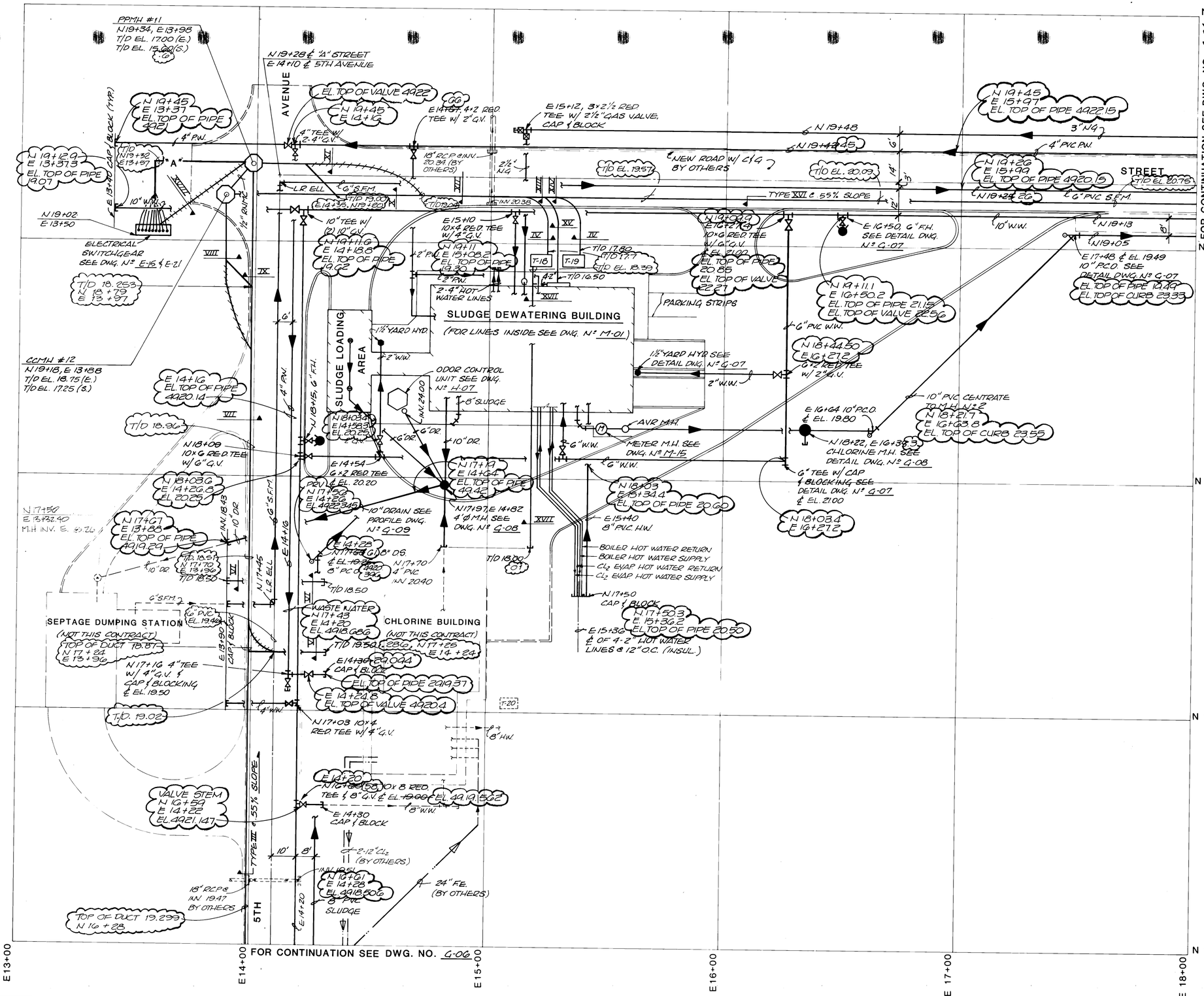
N
N 20+00
N 19+00
N 18+00
N 17+00
N 16+00
E 13+00
E 14+00
E 15+00
E 16+00
E 17+00
E 18+00
FOR CONTINUATION SEE DWG. NO. G-04
FOR CONTINUATION SEE DWG. NO. G-06
5TH AVENUE
STREET
SLUDGE DEWATERING BUILDING
(FOR LINES INSIDE SEE DWG. Nº M-01)
SLUDGE LOADING AREA
SEPTAGE DUMPING STATION
(NOT THIS CONTRACT)
CHLORINE BUILDING
(NOT THIS CONTRACT)
NEW ROAD W/ C&G BY OTHERS
PARKING STRIPS
ELECTRICAL SWITCHGEAR SEE DWG. Nº E-16 & E-21
CCMH #12
N 19+18, E 13+88
T/D EL. 18.75 (E.)
T/D EL. 17.25 (S.)
PPMH #11
N 19+34, E 13+98
T/D EL. 17.00 (E.)
T/D EL. 15.00 (S.)
VALVE STEM
N 16+59
E 14+22
EL. 4921.147
WASTE WATER
N 17+43
E 14+20
EL. 4918.686
TOP OF DUCT 19.293
N 16+28
TYPE III @ 55% SLOPE
TYPE VI @ 55% SLOPE
ODOR CONTROL UNIT SEE DWG. Nº H-07
METER M.H. SEE DWG. Nº M-15
AVR M.H.
CHLORINE M.H. SEE DETAIL DWG. Nº G-08
4'Ø M.H. SEE DWG. Nº G-08
10" DRAIN SEE PROFILE DWG. Nº G-09
BOILER HOT WATER RETURN
BOILER HOT WATER SUPPLY
Cl2 EVAP HOT WATER RETURN
Cl2 EVAP HOT WATER SUPPLY
24" F.E. (BY OTHERS)
2-12" Cl2 (BY OTHERS)
18" RCP @ INV. 19.47 BY OTHERS
TOP OF DUCT 19.02
TOP OF DUCT 18.87
N 17+24
E 13+96
N 17+16 4" TEE W/ 4" G.V. & CAP & BLOCKING & EL. 19.50
N 17+03 10x4 RED TEE W/ 4" G.V.
N 17+50
E 13+82.40
M.H. INV. E. 15.26
N 17+67
E 13+88
EL. TOP OF PIPE 4919.29
N 18+03.6
E 14+20.8
EL. 4920.25
N 18+09
10x6 RED TEE W/ 6" G.V.
N 18+44.50
E 16+27.2
6x2 RED TEE W/ 2" G.V.
N 18+22, E 16+38.3
CHLORINE M.H. SEE DETAIL DWG. Nº G-08
6" TEE W/ CAP & BLOCKING SEE DETAIL DWG. Nº G-07 & EL. 21.00
10" PVC CENTRATE TO M.H. Nº 2
N 18+21.7
E 16+63.8
EL. TOP OF CURB 23.55
E 16+64 10" P.C.O. & EL. 19.80
N 18+03
E 15+34.4
EL. TOP OF PIPE 20.60
N 18+03.4
E 16+27.2
E 15+40
8" PVC H.W.
N 17+50
CAP & BLOCK
N 17+50.3
E 15+36.2
EL. TOP OF PIPE 20.50
E 15+36 & OF 4-2" HOT WATER LINES @ 12" O.C. (INSUL.)
N 17+97, E 14+82
N 17+70
4" PVC
INV 20.40
N 17+45
L2 ELL
N 17+46
L2 ELL
N 17+18
N 17+03
N 17+07
N 16+61
E 14+28
8" PVC
SLUDGE
N 16+59
E 14+22
EL. 4921.147
N 16+28
E 14+20
N 16+28
E 14+28
EL. 4918.606
8" PVC
SLUDGE
N 19+45
E 13+37
EL. TOP OF PIPE 4922
N 19+45
E 13+97
EL. TOP OF PIPE 4922.15
N 19+29
E 13+99
EL. TOP OF PIPE 4920.15
N 19+29
E 13+37.3
EL. TOP OF PIPE 19.07
N 19+02
E 13+50
N 19+11.6
E 14+18.8
EL. TOP OF PIPE 19.62
N 19+11
E 15+08.2
EL. TOP OF PIPE 19.30
N 19+11.1
E 16+50.2
EL. TOP OF PIPE 21.15
EL. TOP OF VALVE 22.25
N 19+13
N 19+05
E 17+48 & EL. 19.49
10" P.C.O. SEE DETAIL DWG. Nº G-07
EL. TOP OF PIPE 19.49
EL. TOP OF CURB 23.33
E 16+50, 6" F.H. SEE DETAIL DWG. Nº G-07
N 19+02.9
E 16+27.4
10x6 RED TEE W/ 6" G.V.
& EL. 21.00
EL. TOP OF PIPE 20.85
EL. TOP OF VALVE 22.27
E 14+54
6x2 RED TEE
PRV & EL. 20.20
N 17+90
E 14+26
EL. 4922.34
N 17+97, E 14+82
4'Ø M.H. SEE DWG. Nº G-08
N 17+70
4" PVC
INV 20.40
N 17+67
E 13+88
EL. TOP OF PIPE 4919.29
E 14+28
8" PC
T/D 18.50
T/D 18.80
T/D 18.96
T/D 18.50
T/D 18.50
T/D 18.50
T/D 18.50
T/D 19.02
T/D 19.293
T/D 18.253
N 19+79
E 13+97
T/D 17.80
T/D 17.7
T/D EL. 18.39
T/D 16.50
T/D EL. 19.57
T/D EL. 20.09
T/D EL. 20.78
T/D 18.80
T/D 18.50
T/D 18.50
T/D 18.50
T/D 18.50

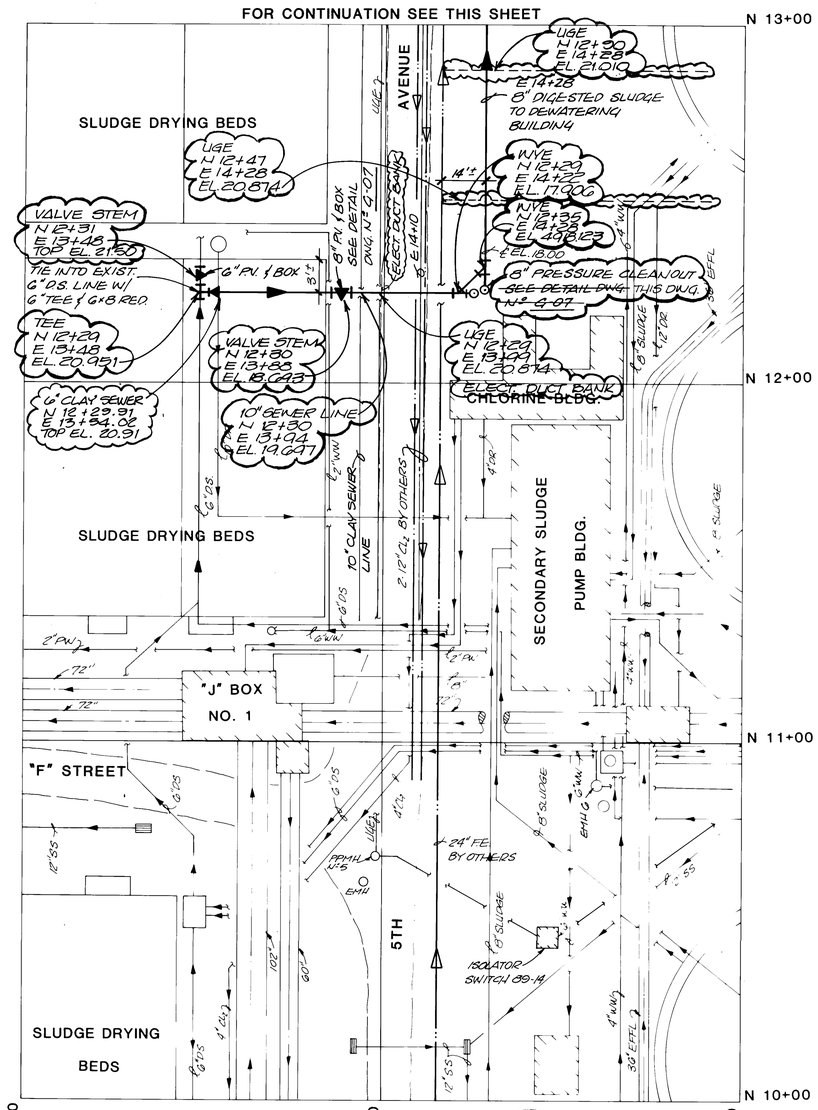

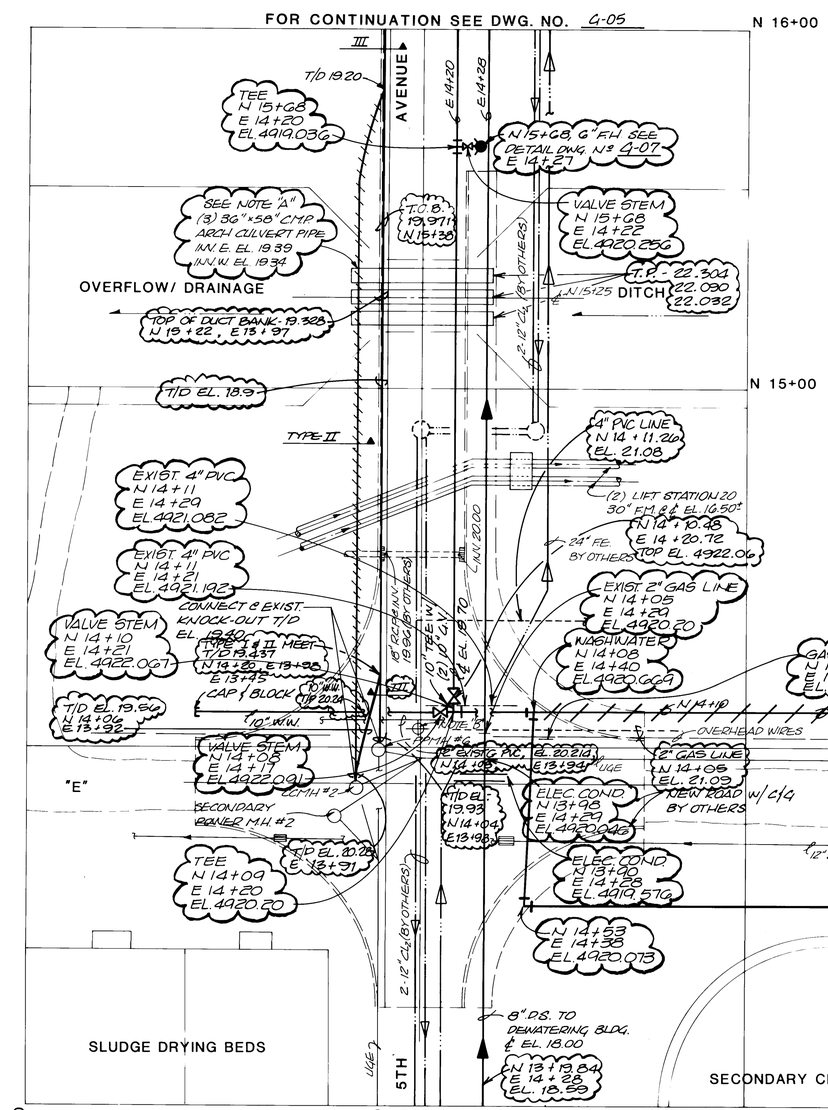

LEGEND

C.R.	CENTRATE RETURN
CCMH	CONTROL AND COMMUNICATION MANHOLE
CL_2	CHLORINE
C.M.P.	CORRUGATED METAL PIPE
D.S.	DIGESTED SLUDGE
DR	DRAIN LINE
T	ELECTRICAL TRANSFORMER
F.E.	FINAL EFFLUENT
F.H.	FIRE HYDRANT
G.V.	GATE VALVE
H.W.	HOUSE WATER
M.H.	MANHOLE
N.G.	NATURAL GAS
P.C.O.	PRESSURE CLEANOUT
P.V.	PLUG VALVE
P.W.	POTABLE WATER
PPMH	PRIMARY POWER MANHOLE
R.C.P.	REINFORCED CONCRETE PIPE
S.F.M.	SEPTAGE FORCEMAIN
S.S.	STORM SEWER
T/D	TOP OF ELECTRICAL DUCT - (TYPE VI)
UGE	UNDERGROUND ELECTRICAL
W.W.	WASHWATER

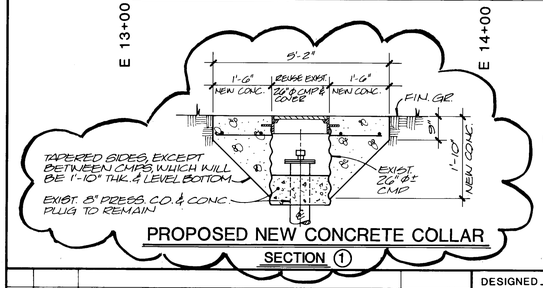

PROPOSED NEW CONCRETE COLLAR

SECTION 1

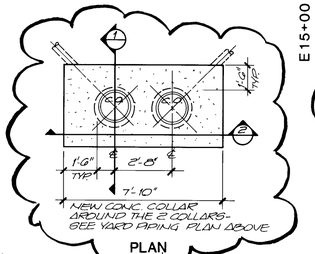

PLAN

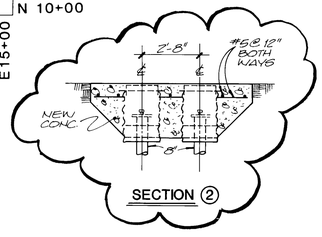

SECTION 2

NOTES:

"A" AT CONTRACTORS OPTION, CMP PIPES MAY BE TEMP. REMOVED TO INSTALL NEW BURIED UTILITIES. CONTRACTOR SHALL BE RESPONSIBLE FOR MAINTAINING DRAINAGE FUNCTION OF DITCH DURING CONST. CMP PIPES SHALL BE RESTORED TO EXIST. ALIGNMENT, INVERT ELEV. & BEDDING AS SHOWN ON DETAIL DWG. Nº G-07

"B" DISCONNECT & REMOVE EXIST. LIGHT POLE, SPLICE CABLE W/ SUBMERSIBLE SPLICE KIT, COORDINATE OUTAGE W/ CITY

RECORD DRAWING

DATE:	DRAFTED BY:
AUG. 1988	MCA

THESE RECORD DRAWINGS HAVE BEEN PREPARED, IN PART, ON THE BASIS OF INFORMATION COMPILED AND FURNISHED BY OTHERS. THE ENGINEER WILL NOT BE RESPONSIBLE FOR ANY ERRORS OR OMISSIONS WHICH HAVE BEEN INCORPORATED INTO THIS DOCUMENT AS A RESULT.

REGISTERED PROFESSIONAL ENGINEER AND LAND SURVEYOR No. 1809 NEW MEXICO DALTON F. MOLZAN

1 2 3 4 5 6 7 8 9 10 11 12 13 14 15 16 17 18 19 20 21 22 23 24 25 26 27 28 29
2 6 3 6 9 4 6 8 8

NO.	DATE	REVISIONS	APPROVED

DESIGNED LMR
DRAWN RAJ
CHECKED LMR
APPROVED
APPROVED
DATE

MOLZEN-CORBIN
STANLEY CONSULTANTS
A JOINT VENTURE

1" = 20'-0" 0 20' 30' 40'
GRAPHIC SCALE

CITY OF ALBUQUERQUE, NEW MEXICO
SOLIDS HANDLING FACILITIES
PHASE II B-3, CONTRACT 1

INTERIM SLUDGE DEWATERING FACILITIES
YARD PIPING PLAN

M-C NO. 832221
G-06
6 of 112
SC NO.

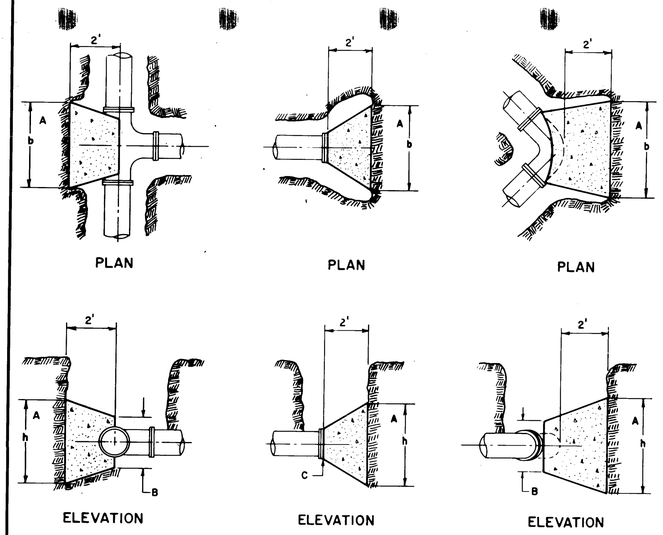

CONCRETE BLOCKING DETAILS

NO SCALE

PIPE SIZE	ELBOW ANGLE	ELBOW (b) DIM.	ELBOW (h) DIM.	TEE OR PLUG (b) DIM.	TEE OR PLUG (h) DIM.
4"				2'	1'
4"	90° 45°	2'	2'		
4"	22½° 11¼°	2'	2'		
6"				2'	2'
6"	90° 45°	2'	2'		
6"	22½° 11¼°	2'	2'		
8"				3'	3'
8"	90°	3'	3'		
8"	45°	2'	2'		
8"	22½° 11¼°	2'	2		
10"				3'	3'
10"	90°	3'-6"	3'-6"		
10"	45°	3'	3'		
10"	22½° 11¼°	2'	2'		
12"				3'-6"	3'-6"
12"	90°	4'	4'		
12"	45°	3'-6"	3'-6"		
12"	22½° 11¼°	2'	2'		
14"				4'	4'
14"	90°	5'	5'		
14"	45°	3'-6"	3'-6"		
14"	22½° 11¼°	3'	3'		

CONSTRUCTION NOTES:

A. UNDISTURBED EARTH.

B. O.D. OF PIPE + 8".

C. O.D. OF CAP OR PLUG, MIN. 12" x 12".

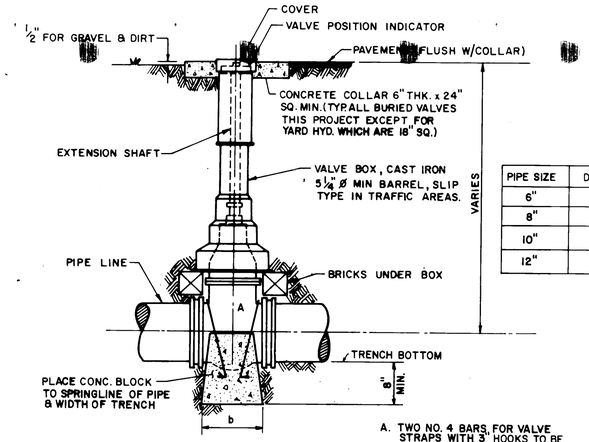

PIPE SIZE	DIM. b
6"	8"
8"	9"
10"	10"
12"	10"

A. TWO NO. 4 BARS FOR VALVE STRAPS WITH 3" HOOKS TO BE IMBEDDED BELOW BOTTOM OF PIPE

TYPICAL VALVE DETAIL

NO SCALE

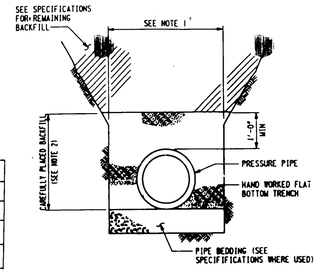

TYPICAL TRENCH CROSS-SECTION

NOTES:

1. MAXIMUM TRENCH WIDTH = PIPE OUTSIDE DIAMETER PLUS 2'.
2. CAREFULLY PLACED BACKFILL SHALL BE FINELY DIVIDED, JOB EXCAVATED MATERIAL, FREE FROM DEBRIS, STONES LARGER THAN ½", ORGANIC MATTER, FROZEN MATERIAL, AND COMPACTED IN 6" LAYERS TO 90% MAXIMUM DENSITY, ASTM D1557. SELECT BACKFILL MAY BE SUBSTITUTED FOR JOB EXCAVATED MATERIAL AND SHALL BE USED WHERE REMAINING BACKFILL IS SPECIFIED TO BE SELECT BACKFILL MATERIAL.

PRESSURE PIPE BEDDING DETAIL

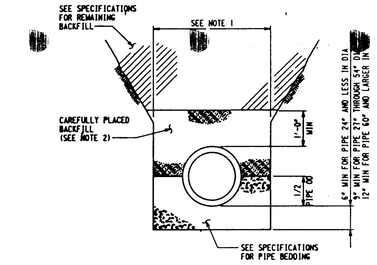

TYPICAL TRENCH CROSS-SECTION

NOTES:

1. FOR ALLOWABLE TRENCH WIDTH SEE SPECIFICATIONS.
2. CAREFULLY PLACED BACKFILL SHALL BE CAREFULLY COMPACTED, FINELY DIVIDED, JOB EXCAVATED MATERIAL, FREE FROM DEBRIS, STONES LARGER THAN ½", ORGANIC MATTER AND FROZEN MATERIAL, COMPACTED TO 90% MAXIMUM DENSITY, ASTM D1557. SELECT BACKFILL MAY BE SUBSTITUTED FOR JOB EXCAVATED MATERIAL AND SHALL BE USED WHERE REMAINING BACKFILL IS SPECIFIED TO BE SELECT BACKFILL MATERIAL.

NON-PRESSURE PIPE BEDDING DETAIL

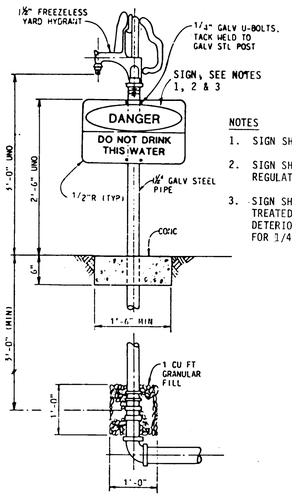

NOTES

1. SIGN SHALL BE MOUNTED TO PERMIT EASY READING.
2. SIGN SHALL BE 7" X 10" AND CONFORM TO OSHA REGULATION, 1910.145.
3. SIGN SHALL BE 3/8" THICK LAMINATED PLASTIC TREATED TO RESIST SUNLIGHT (ULTRAVIOLET) DETERIORATION, MOUNTING: 4 GROMMETED HOLES FOR 1/4" GALVANIZED U-BOLTS.

YARD HYDRANT DETAIL

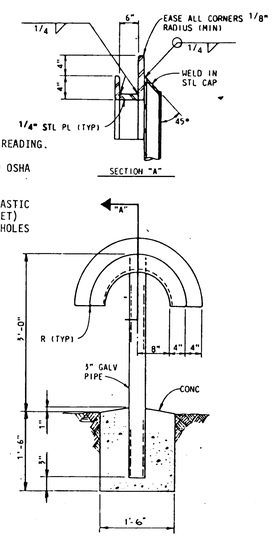

HOSE RACK DETAIL

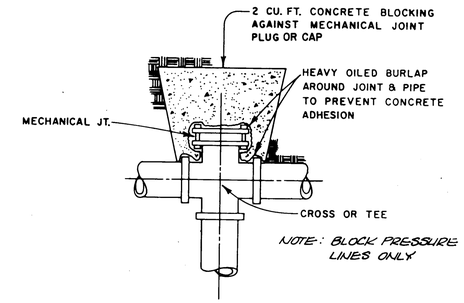

CAP AND BLOCKING DETAIL

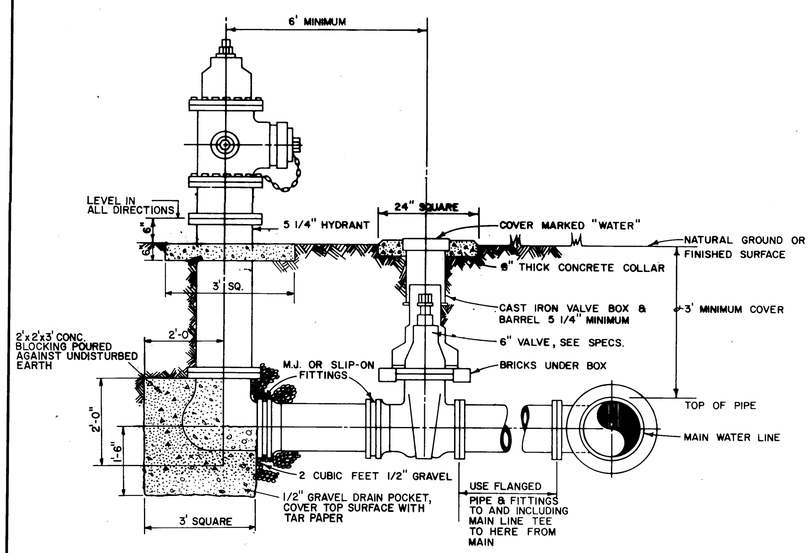

FIRE HYDRANT DETAIL

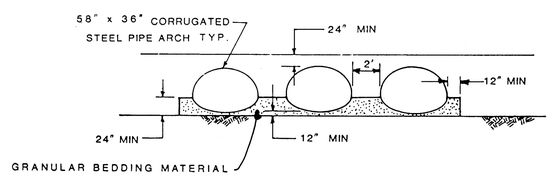

C.M.P. REPLACEMENT DETAIL

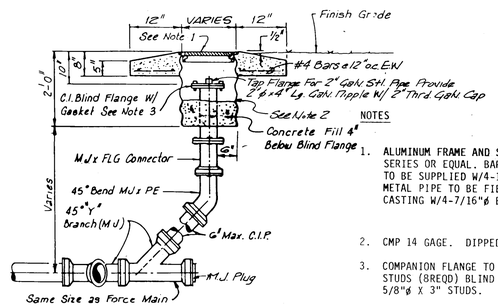

NOTES

1. ALUMINUM FRAME AND SOLID LID. NEENAH R-5900 SERIES OR EQUAL. BARREL PORTION OF FRAME CASTING TO BE SUPPLIED W/4-1/2"ø HOLES 90° APART CORRUGATED METAL PIPE TO BE FIELD DRILLED & BOLTED TO FRAME CASTING W/4-7/16"ø BOLTS.
2. CMP 14 GAGE. DIPPED IN COAL TAR ENAMEL.
3. COMPANION FLANGE TO BE THREADED FOR 5/8"ø X 3" STUDS (8REQD) BLIND FLANGE TO BE DRILLED FOR 5/8"ø X 3" STUDS.
4. PROVIDE RESTRAINED MECHANICAL JOINTS USING SET SCREW RETAINER GLANDS.

PRESSURE TYPE YARD CLEAN OUT DETAIL

RECORD DRAWING

DATE:	DRAFTED BY:
AUG. 1988	MCA

THESE RECORD DRAWINGS HAVE BEEN PREPARED, IN PART, ON THE BASIS OF INFORMATION COMPILED AND FURNISHED BY OTHERS. THE ENGINEER WILL NOT BE RESPONSIBLE FOR ANY ERRORS OR OMISSIONS WHICH HAVE BEEN INCORPORATED INTO THIS DOCUMENT AS A RESULT.

REGISTERED PROFESSIONAL ENGINEER & LAND SURVEYOR No. 1869 NEW MEXICO DALTON F. MOLZEN

1 2 3 4 5 6 7 8 9 10 11 12 13 14 15 16 17 18 19 20 21 22 23 24 25 26 27 28 29

-6 3 6 9 4 0 7 8 8

NO.	DATE	REVISIONS	APPROVED

DESIGNED LMR
DRAWN RA
CHECKED LMR
APPROVED
APPROVED
DATE

MOLZEN-CORBIN
STANLEY CONSULTANTS
A JOINT VENTURE

NONE
GRAPHIC SCALE

CITY OF ALBUQUERQUE, NEW MEXICO
SOLIDS HANDLING FACILITIES
PHASE II B-3, CONTRACT 1

INTERIM SLUDGE DEWATERING FACILITIES
YARD PIPING DETAILS

M-C NO. 832221
G-07
7 of 112
SC NO.

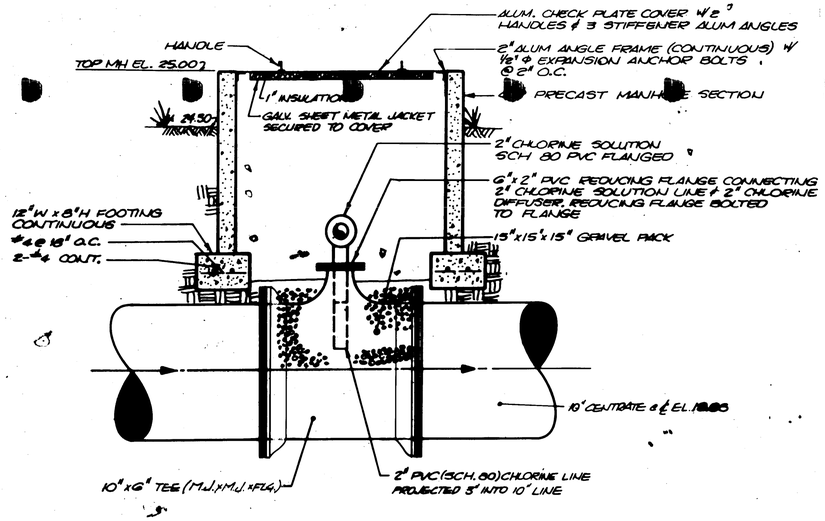

1 G-08

SECTION

NTS

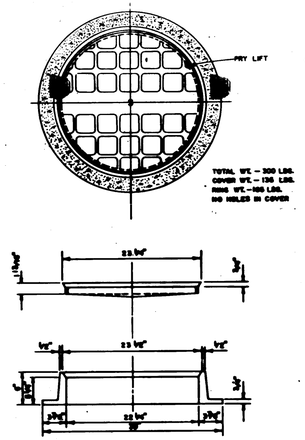

DETAIL "A"

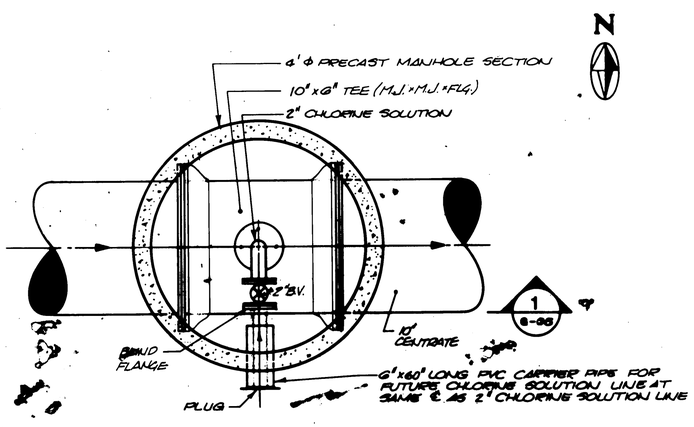

CHLORINE DIFFUSER MANHOLE PLAN

NTS

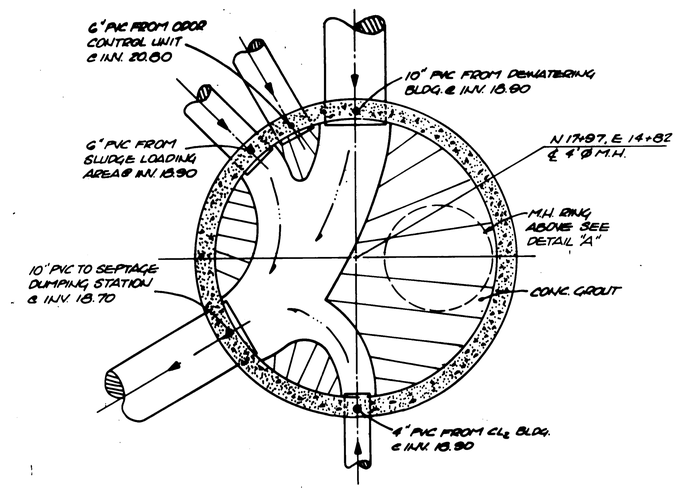

PLAN

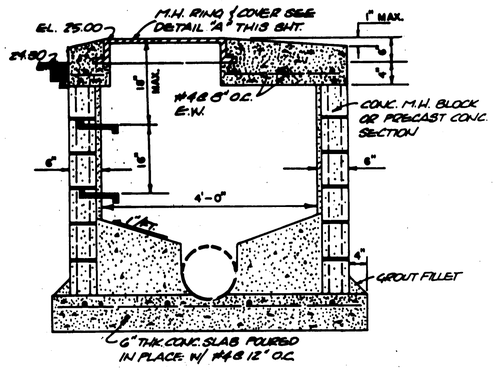

SECTION

MANHOLE DETAIL

RECORD DRAWING	
DATE: AUG. 1986	DRAFTED BY: MCA

THESE RECORD DRAWINGS HAVE BEEN PREPARED, IN PART, ON THE BASIS OF INFORMATION COMPILED AND FURNISHED BY OTHERS. THE ENGINEER WILL NOT BE RESPONSIBLE FOR ANY ERRORS OR OMISSIONS WHICH HAVE BEEN INCORPORATED INTO THIS DOCUMENT AS A RESULT.

REGISTERED PROFESSIONAL ENGINEER AND LAND SURVEYOR — NEW MEXICO — GATION I. MOLZEN

1 2 3 4 5 6 7 8 9 10 11 12 13 14 15 16 17 18 19 20 21 22 23 24 25 26 27 28 29

2 6 3 6 9 4 0 8 8 8

NO.	DATE	REVISIONS	APPROVED

DESIGNED LMR
DRAWN RA
CHECKED LMR
APPROVED
APPROVED
DATE

MOLZEN-CORBIN
STANLEY CONSULTANTS
A JOINT VENTURE

NONE
GRAPHIC SCALE

CITY OF ALBUQUERQUE, NEW MEXICO
SOLIDS HANDLING FACILITIES
PHASE II B- , CONTRACT

INTERIM SLUDGE DEWATERING FACILITIES
YARD PIPING DETAILS

M-C NO. 832221
G-08
8 OF 112
SC NO.

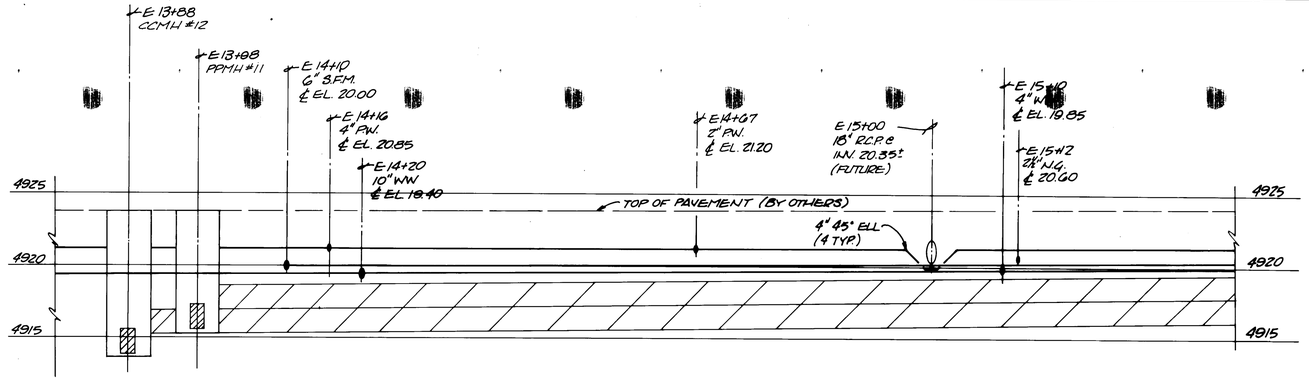

ILLUSTRATIVE PROFILE SECTION LOOKING NORTH @ N 19+00

(SEE DWG. Nº G-05)

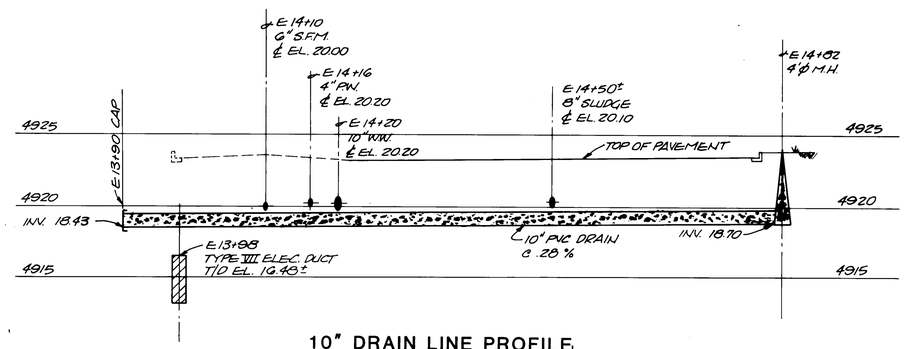

10" DRAIN LINE PROFILE

(SEE DWG. Nº G-05)

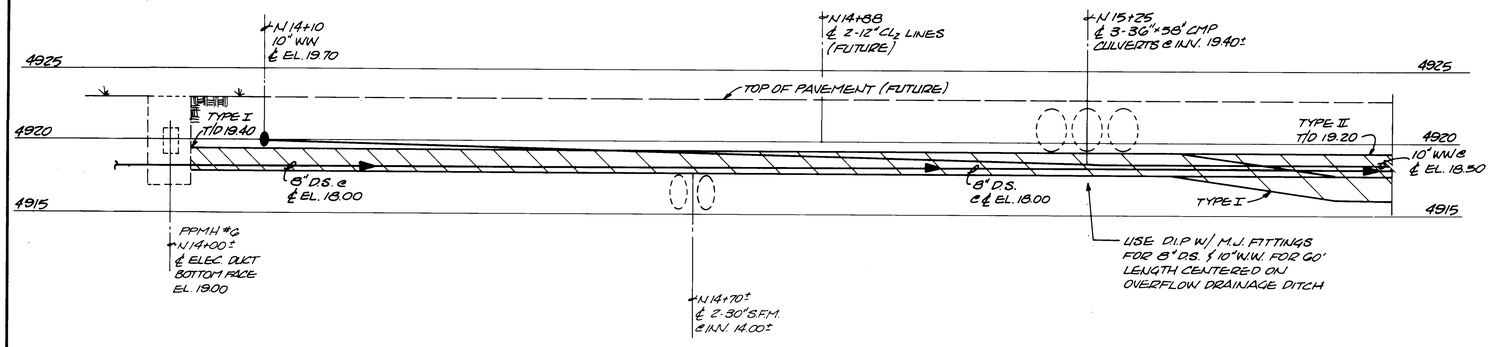

ILLUSTRATIVE PROFILE SECTION LOOKING WEST @ E 14+50

(SEE DWG. Nº G-06)

RECORD DRAWING	
DATE: AUG. 1988	DRAFTED BY: MCA

THESE RECORD DRAWINGS HAVE BEEN PREPARED, IN PART, ON THE BASIS OF INFORMATION COMPILED AND FURNISHED BY OTHERS. THE ENGINEER WILL NOT BE RESPONSIBLE FOR ANY ERRORS OR OMISSIONS WHICH HAVE BEEN INCORPORATED INTO THIS DOCUMENT AS A RESULT.

REGISTERED PROFESSIONAL ENGINEER & LAND SURVEYOR — NEW MEXICO — DAYTON F. MOLZEN — 1809

1 2 3 4 5 6 7 8 9 10 11 12 13 14 15 16 17 18 19 20 21 22 23 24 25 26 27 28 29
2 6 3 6 9 4 0 9 8 8

NO.	DATE	REVISIONS	APPROVED

DESIGNED LMR
DRAWN DLA
CHECKED LMR
APPROVED
APPROVED
DATE

MOLZEN-CORBIN
STANLEY CONSULTANTS
A JOINT VENTURE

1" = 10'-0" HORIZ. 0 10' 15' 20'
1" = 5'-0" VERT 0 5' 10'
GRAPHIC SCALE

CITY OF ALBUQUERQUE, NEW MEXICO
SOLIDS HANDLING FACILITIES
PHASE II B-3, CONTRACT 1

INTERIM SLUDGE DEWATERING FACILITIES
YARD PIPING PROFILES

M-C NO. 832221
G-09
9 of 112
SC NO.

82624

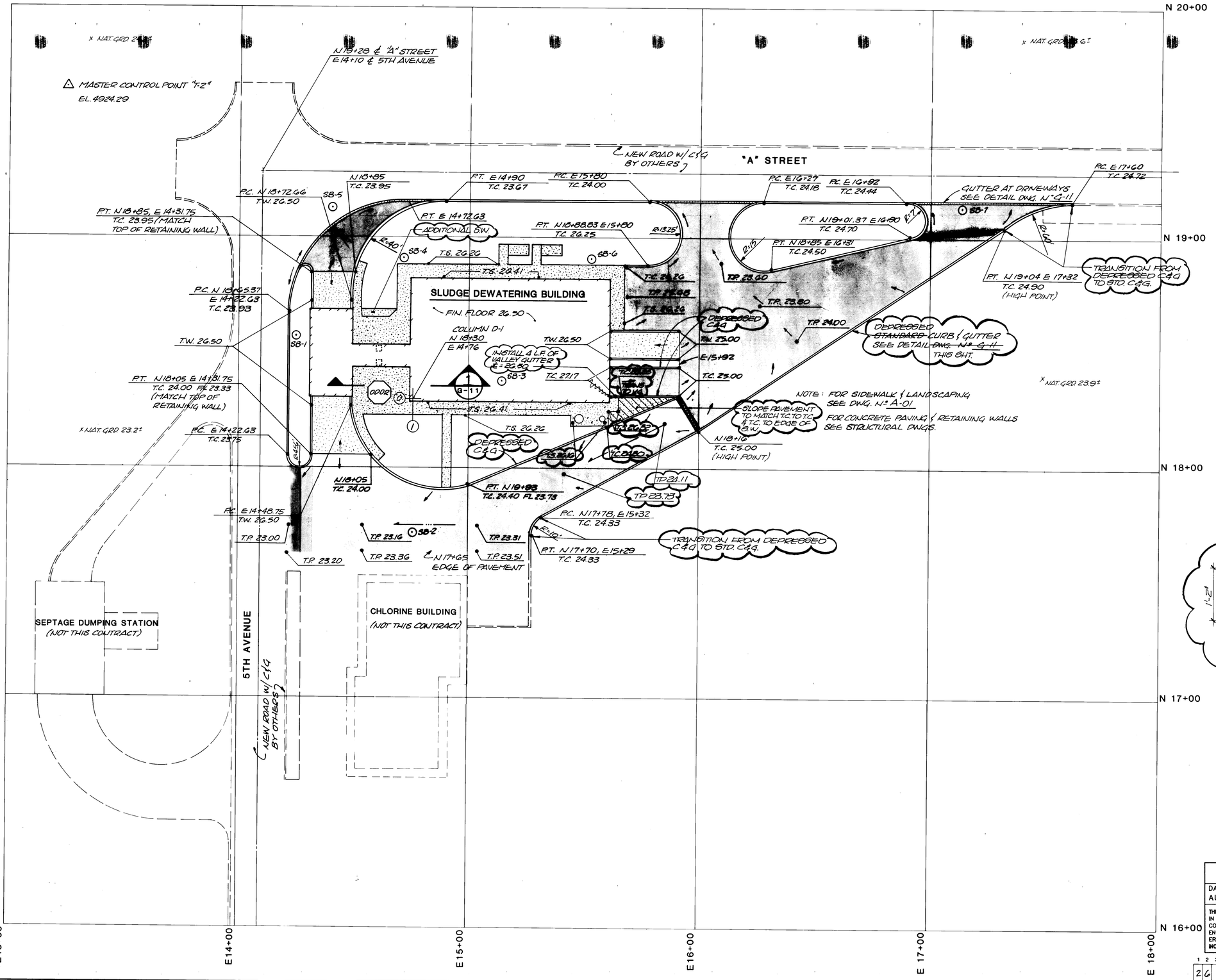

N

LEGEND

P.C.	POINT OF CURVATURE
P.T.	POINT OF TANGENCY
C.& G.	GURB AND GUTTER
FL.	FLOWLINE
T.C.	TOP OF CURB
T.P.	TOP OF PAVEMENT
T.S.	TOP OF SIDEWALK
T.W.	TOP OF WALL
⊙	SOIL BORINGS SB-1 THROUGH SB-7 TAKEN OCTOBER 11 & 12 BY SHB CONSULTING GEOTECHNICAL ENGINEERS
	ASPHALT PAVING
	CONCRETE
	SIDEWALK

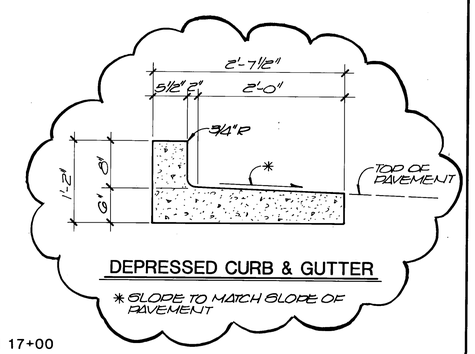

RECORD DRAWING

DATE: AUG. 1988	DRAFTED BY: MCA

THESE RECORD DRAWINGS HAVE BEEN PREPARED, IN PART, ON THE BASIS OF INFORMATION COMPILED AND FURNISHED BY OTHERS. THE ENGINEER WILL NOT BE RESPONSIBLE FOR ANY ERRORS OR OMISSIONS WHICH HAVE BEEN INCORPORATED INTO THIS DOCUMENT AS A RESULT.

REGISTERED PROFESSIONAL ENGINEER AND LAND SURVEYOR No. 1809 NEW MEXICO DAYTON E. MOLZEN

1 2 3 4 5 6 7 8 9 10 11 12 13 14 15 16 17 18 19 20 21 22 23 24 25 26 27 28 29
2 6 3 6 9 4 1 0 8 8

NO.	DATE	REVISIONS	APPROVED

DESIGNED LMR
DRAWN RA
CHECKED LMR
APPROVED
APPROVED
DATE

MOLZEN-CORBIN
STANLEY CONSULTANTS
A JOINT VENTURE

1" = 20'-0"
0 20' 30' 40'
GRAPHIC SCALE

CITY OF ALBUQUERQUE, NEW MEXICO
SOLIDS HANDLING FACILITIES
PHASE II B-3, CONTRACT 1

INTERIM SLUDGE DEWATERING FACILITIES
PAVING PLAN

M-C NO. 832221
G-10
10 of 112
SC NO.

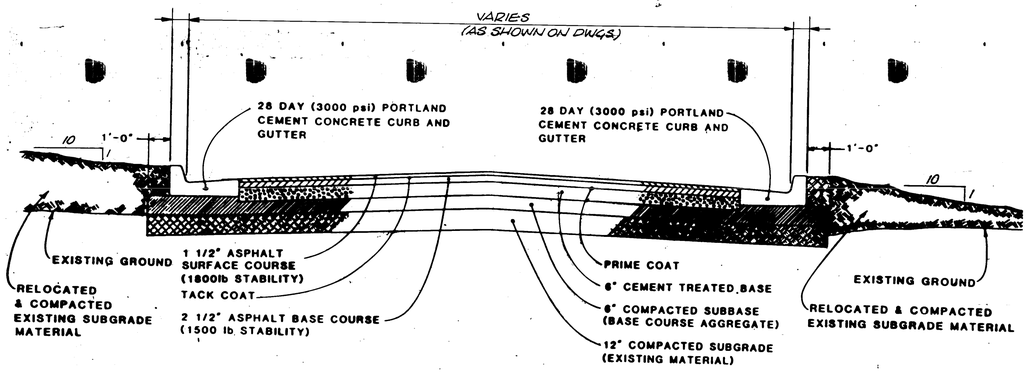

TYPICAL ROADWAY SECTION

NO SCALE

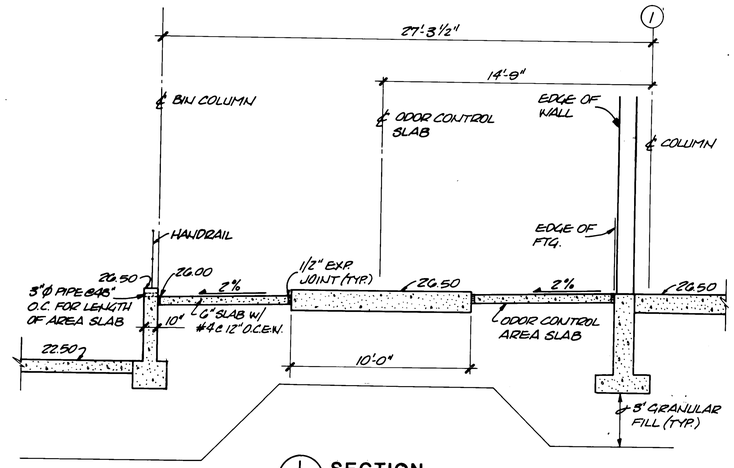

1 / G-10 SECTION

NOTE: REFER TO STRUCTURAL DWGS. FOR STRUCTURAL REINFORCING

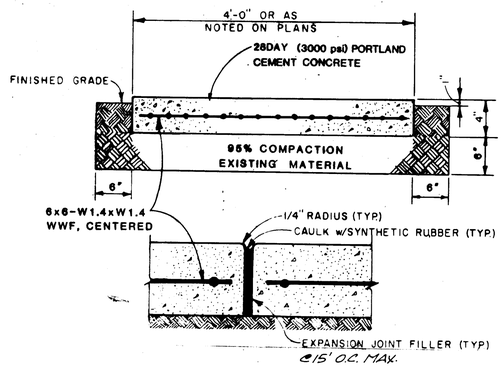

CONCRETE SIDEWALK DETAIL

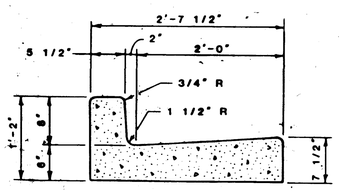

STANDARD CURB & GUTTER

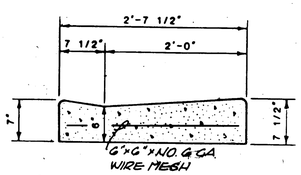

GUTTER AT DRIVEWAYS

NOTES:

1. PROVIDE CONTRACTION JOINTS IN THE CURB AND GUTTER 6'-0" O.C. MAXIMUM AND 1/2" PREMOLDED EXPANSION JOINTS AT 48'-0" O.C. MAXIMUM. ALSO PROVIDE 1/2" PREMOLDED EXPANSION JOINTS AT CURB RETURNS AND EACH SIDE OF DRIVEWAYS.
2. ALL EDGES NOT SPECIFICALLY DIMENSIONED SHALL BE EDGED WITH A 1/4" OR 3/8" EDGING TOOL.

RECORD DRAWING

DATE:	DRAFTED BY:
AUG. 1988	MCA

THESE RECORD DRAWINGS HAVE BEEN PREPARED, IN PART, ON THE BASIS OF INFORMATION COMPILED AND FURNISHED BY OTHERS. THE ENGINEER WILL NOT BE RESPONSIBLE FOR ANY ERRORS OR OMISSIONS WHICH HAVE BEEN INCORPORATED INTO THIS DOCUMENT AS A RESULT.

REGISTERED PROFESSIONAL ENGINEER AND LAND SURVEYOR NEW MEXICO DAMON E. MOLZEN

1 2 3 4 5 6 7 8 9 10 11 12 13 14 15 16 17 18 19 20 21 22 23 24 25 26 27 28 29
26 36 9 4 1 1 8 8

NO.	DATE	REVISIONS	APPROVED

DESIGNED LMR
DRAWN RA
CHECKED LMR
APPROVED
APPROVED
DATE

MOLZEN-CORBIN
STANLEY CONSULTANTS
A JOINT VENTURE

NONE
GRAPHIC SCALE

CITY OF ALBUQUERQUE, NEW MEXICO
SOLIDS HANDLING FACILITIES
PHASE II B-3, CONTRACT 1

INTERIM SLUDGE DEWATERING FACILITIES
PAVING SECTIONS AND DETAILS

M-C NO. [redacted]
G-11
11 of 12
SC NO.

PIPE JOINTS & FITTINGS

DESCRIPTION	SCHEMATIC	THREE LINE	ONE LINE & ISOMETRIC
FLANGE			
GROOVED COUPLING			
MECHANICAL JOINT			
SCREWED JOINT			
SLIP-ON JOINT			
WELDED JOINT			
QUICK CONNECT FLEXIBLE HOSE			
HARNESS TYPE COUPLING	H	H	H
SLEEVE TYPE COUPLING			
UNION			
FLEXIBLE CONNECTOR			
CONCENTRIC REDUCER			
ECCENTRIC REDUCER			
BLIND FLANGE			
METER	M	M	M
STRAINER			
PRESSURE GAUGE			
THERMOMETER			
FLEXIBLE REDUCER ECCENTRIC			
CLEANOUT (CO)			
FLUSHING CONNECTION WITH ISOLATION VALVE			

VALVE SYMBOLS

DESCRIPTION	ONE LINE		THREE LINE	
	STEM PERP TO PLANE OF DWG	STEM PRL TO PLANE OF DWG	STEM PERP TO PLANE OF DWG	STEM PRL TO PLANE OF DWG
GATE VALVE (GV)				
PLUG VALVE (PV)				
BUTTERFLY VALVE (BFV)				
BALL VALVE (BV)				
SWING CHECK VALVE (SCV)				
BALL CHECK VALVE (BCV)				
SOLENOID VALVE (SV)	S	S	S	S
AIR CHECK VALVE (ACV)				
PRESSURE REDUCING VALVE (PRV)				
KNIFE GATE VALVE (KV)				
DIAPHRAGM VALVE (DV)				
THREE WAY VALVE (TWV)				
FOURWAY VALVE (FWV)				
AUTO AIR AND VACUUM RELEASE (AVR)	AVR	AVR	AVR	AVR
AUTO AIR RELEASE (AR)	AR	AR	AR	AR
GLOBE VALVE (GL)				
PRESSURE RELIEF				
GAS VALVE	G	G	G	G
CORPORATION STOP (CS)				
VEE BALL VALVE (VB)				
ELECTRIC ACTUATOR ON VALVE	M	M	M	M
THERMAL FLUID BALL VALVE (TBV)				
BACKPRESSURE SUSTAINING VALVE				
PRESSURE RELIEF (ANGLE TYPE)				

YARD PIPING ABBREVIATIONS

C.R.	CENTRATE RETURN
CCMH	CONTROL AND COMMUNICATION MANHOLE
CL	CHLORINE
C.M.P.	CORRUGATED METAL PIPE
D.S.	DIGESTED SLUDGE
[illegible]	[illegible]
[illegible]	TRANSFORMER
F.E.	FINAL EFFLUENT
F.H.	FIRE HYDRANT
G.V.	GATE VALVE
H.W.	HOUSE WATER
M.H.	MANHOLE
N.G.	NATURAL GAS
P.C.O.	PRESSURE CLEANOUT
P.V.	PLUG VALVE
P.W.	POTABLE WATER
PMH	PRIMARY POWER MANHOLE
R.C.P.	REINFORCED CONCRETE PIPE
R.O.W.	RETURN OF WASTEWATER
[illegible]	STORM SEWER
T.P.	TOP OF ELECTRICAL DUCT BANK TYPE [illegible]
U.G.	UNDERGROUND ELECTRIC
W.W.	WASTEWATER

PROCESS PIPING ABBREVIATIONS

BHPW	BUILDING HOT WATER [illegible]
BHWR	BUILDING HOT WATER [illegible]
BSP	BUILDING SERVICE [illegible]
CR	CENTRATE RETURN
CSP	CENTRATE SAMPLE [illegible]
CLPW	CHLORINATED CLEAR WELL HOT WATER [illegible]
[illegible]	CHLORINATED CLEAR WELL HOT WATER [illegible]
DSP	DIGESTED SLUDGE [illegible]
DW	DRIP TO [illegible] WATER
HPW	HIGH PRESSURE HOT WATER
HPWR	HIGH PRESSURE HOT WATER RETURN
NG	NATURAL GAS
PCE	POLYMER [illegible]
PEE	POLYMER FEED PUMP
PW	POTABLE WATER
[illegible]	SODIUM [illegible] FEED PUMP
SS	STAINLESS STEEL
WW	WASTEWATER
WWT	WASTEWATER TREATED

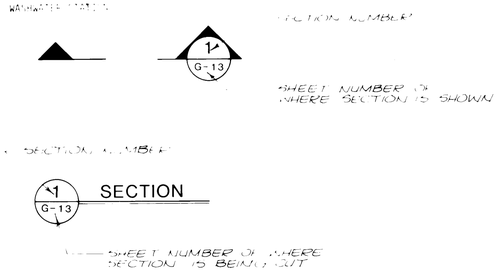

SECTION CUT DETAIL

DESCRIPTION	SYMBOLS
FLOOR DRAIN (FD)	
CLEAN OUT (CO)	
EQUIPMENT DRAIN (ED)	
NON-FREEZE YARD HYDRANT	
FIRE HYDRANT	

MATERIAL SYMBOLS

- COMPACTED EARTH
- EXISTING EARTH
- CONCRETE
- CONCRETE BLOCK
- CONCRETE WEARING COURSE
- BRICK
- SAND
- GRANULAR FILL
- GRATING
- CHECKERED PLATE
- STEEL
- ALUMINUM
- CAST IRON

RECORD DRAWING

DATE: AUG. 1988 | DRAFTED BY: MCA

THESE RECORD DRAWINGS HAVE BEEN PREPARED, IN PART, ON THE BASIS OF INFORMATION COMPILED AND FURNISHED BY OTHERS. THE ENGINEER WILL NOT BE RESPONSIBLE FOR ANY ERRORS OR OMISSIONS WHICH HAVE BEEN INCORPORATED INTO THIS DOCUMENT AS A RESULT.

1 2 3 4 5 6 7 8 9 10 11 12 13 14 15 16 17 18 19 20 21 22 23 24 25 26 27 28 29
2 6 3 6 9 4 1 2 9 8

NO.	DATE	REVISIONS	APPROVED

DESIGNED LMR
DRAWN RA
CHECKED LMR
APPROVED
APPROVED
DATE

MOLZEN-CORBIN
STANLEY CONSULTANTS
A JOINT VENTURE

NONE
GRAPHIC SCALE

CITY OF ALBUQUERQUE, NEW MEXICO
SOLIDS HANDLING FACILITIES
PHASE II B-3, CONTRACT 1

INTERIM SLUDGE DEWATERING FACILITIES
STANDARD SYMBOLS

M-C NO. 832221
G-12
12 OF 112
SC NO.

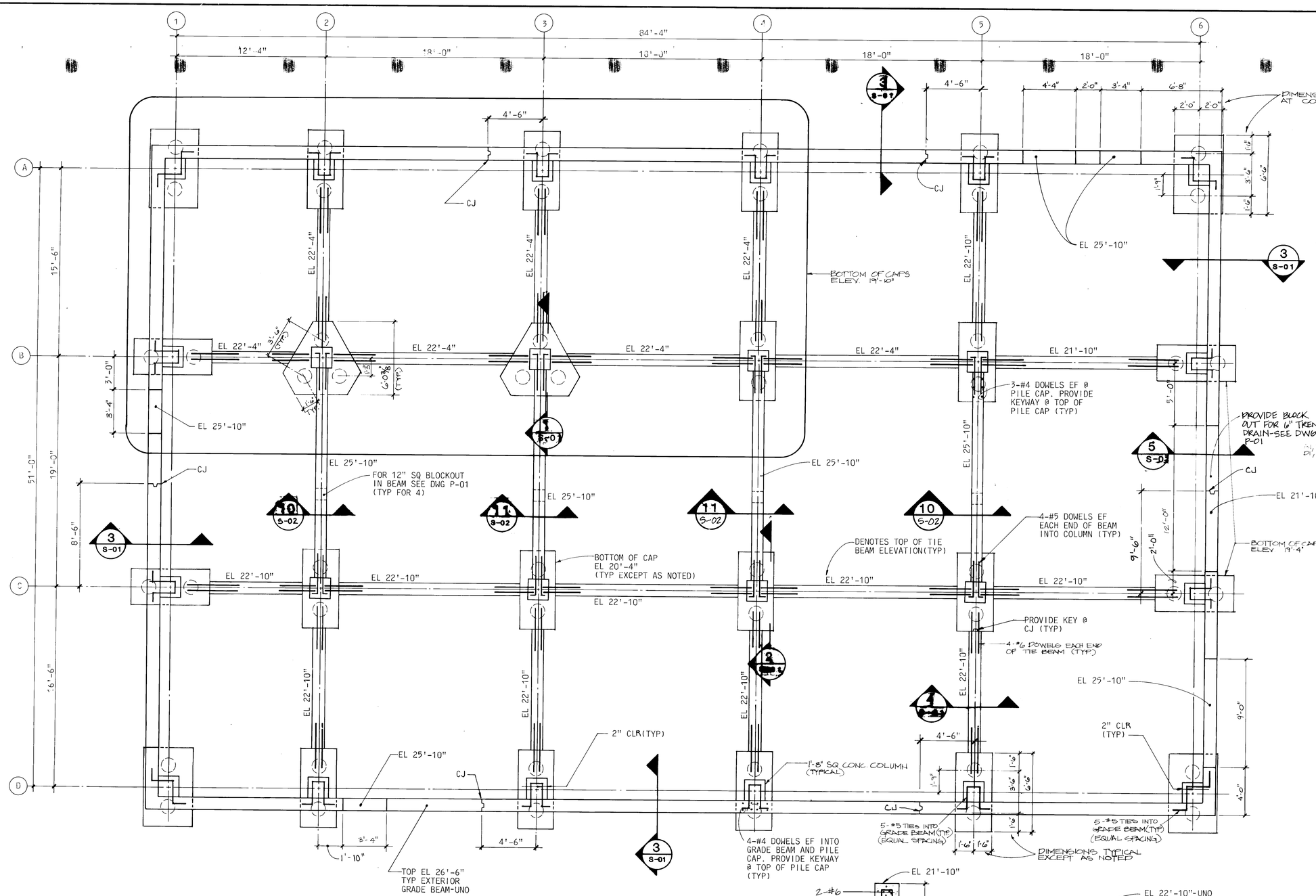

FOUNDATION PLAN

1/4"=1'-0"

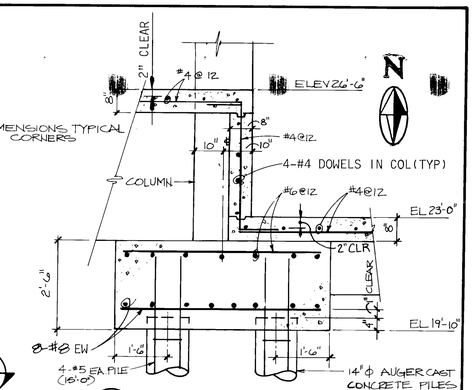

SECTION

1/2"=1'-0" (TYPICAL 2 COLUMNS)

NOTE: TIE BEAMS NOT SHOWN FOR CLARITY

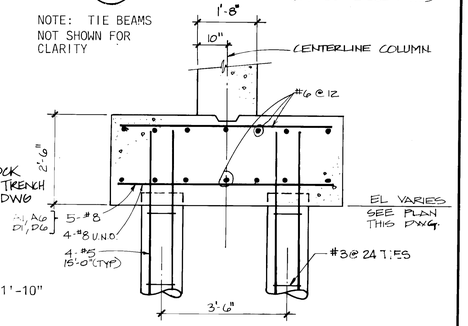

SECTION (TYPICAL U.N.O)

1/2"=1'-0"

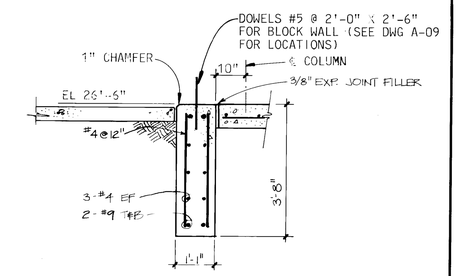

SECTION

1/2"=1'-0"

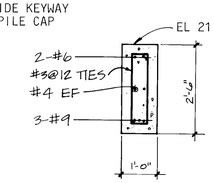

SECTION

1/2"=1'-0"

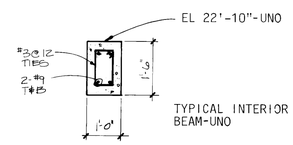

TYPICAL INTERIOR TIE BEAM-UNO

SECTION

1/2"=1'-0"

NOTES:

1. SEE DRAWING S-18 FOR CONCRETE AND REINFORCING STEEL NOTES.
2. SEE MECHANICAL, PLUMBING AND ELECTRICAL DRAWINGS FOR EMBEDDED ITEMS.

RECORD DRAWING

DATE:	DRAFTED BY:
AUG. 1988	MCA

THESE RECORD DRAWINGS HAVE BEEN PREPARED, IN PART, ON THE BASIS OF INFORMATION COMPILED AND FURNISHED BY OTHERS. THE ENGINEER WILL NOT BE RESPONSIBLE FOR ANY ERRORS OR OMISSIONS WHICH HAVE BEEN INCORPORATED INTO THIS DOCUMENT AS A RESULT.

RICHARD E. WITTER NEW MEXICO 6822 REGISTERED PROFESSIONAL ENGINEER

1 2 3 4 5 6 7 8 9 10 11 12 13 14 15 16 17 18 19 20 21 22 23 24 25 26 27 28 29

26 3 6 9 4 1 3 8 8

NO.	DATE	REVISIONS	APPROVED
1	4-22-88	FINAL DRAWING	

DESIGNED W. TYNER
DRAWN DWRIGHT
CHECKED W. TYNER
APPROVED
APPROVED
DATE MAY 31, 1985

MOLZEN-CORBIN
STANLEY CONSULTANTS
A JOINT VENTURE

1/2"=1'-0" 0 1' 2' 3' 4'
1/4"=1'-0" 0 4' 6' 8'
GRAPHIC SCALE

CITY OF ALBUQUERQUE, NEW MEXICO
SOLIDS HANDLING FACILITIES
PHASE II B-8, CONTRACT 1

INTERIM SLUDGE DEWATERING FACILITIES
DEWATERING BUILDING
FOUNDATION PLAN AND SECTIONS

M-C NO. S-01 13 OF 112
SC NO. 8496-S1

© STANLEY CONSULTANTS

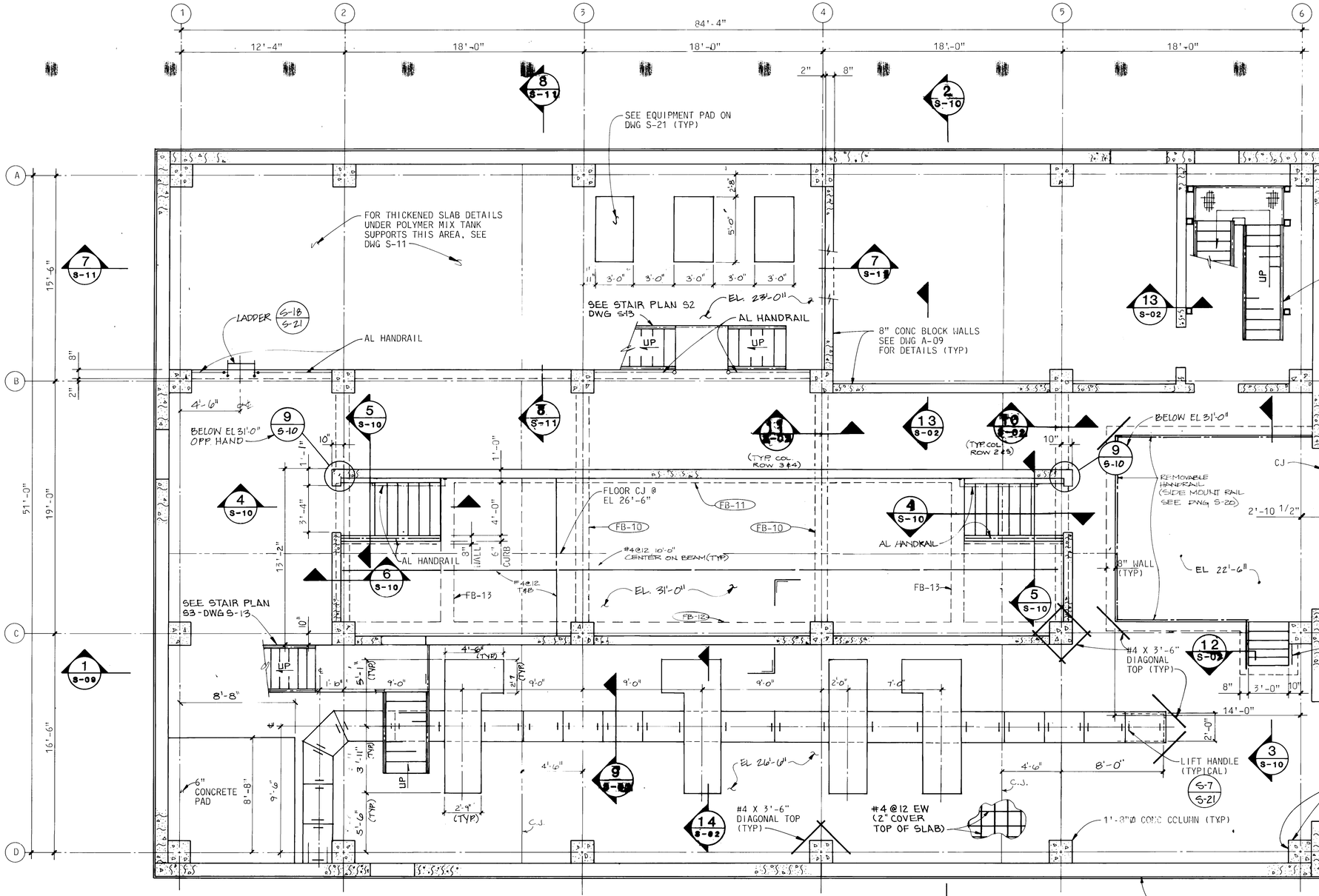

GROUND FLOOR PLAN

1/4"=1'0"

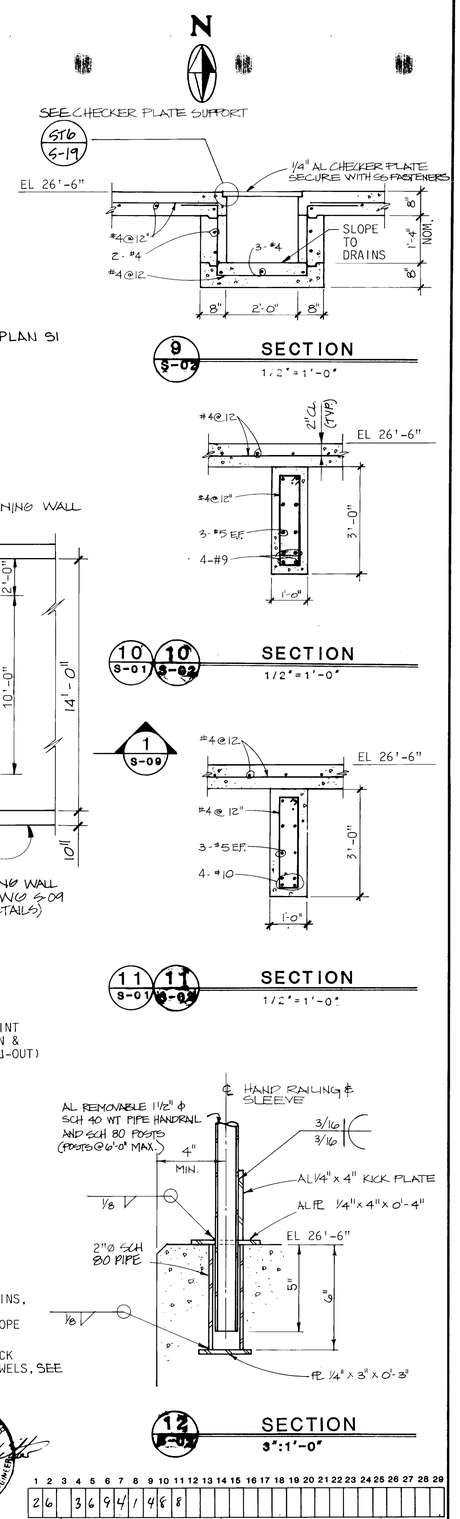

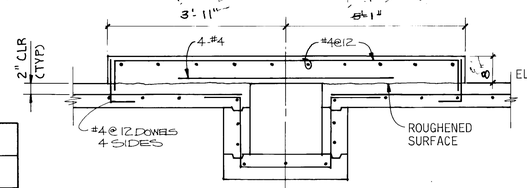

14 S-02 SECTION 1/2"=1'-0"

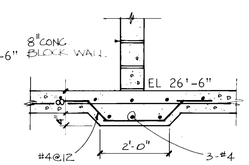

13 S-02 SECTION 1/2"=1'-0"

NOTES:

FOR FLOOR DRAINS, TRENCH DRAINS, FLOOR SLOPE AND TRENCH FLOOR SLOPE, SEE P-01 AND P-02 (SLOPE FLOOR TO DRAINS)

FOR LOCATION OF INTERIOR BLOCK WALL VERTICAL REINFORCING DOWELS, SEE DRAWING A-09

RECORD DRAWING

DATE:	DRAFTED BY:
AUG. 1988	MCA

THESE RECORD DRAWINGS HAVE BEEN PREPARED, IN PART, ON THE BASIS OF INFORMATION COMPILED AND FURNISHED BY OTHERS. THE ENGINEER WILL NOT BE RESPONSIBLE FOR ANY ERRORS OR OMISSIONS WHICH HAVE BEEN INCORPORATED INTO THIS DOCUMENT AS A RESULT.

RICHARD E. MINTER NEW MEXICO 8722 REGISTERED PROFESSIONAL ENGINEER

1 2 3 4 5 6 7 8 9 10 11 12 13 14 15 16 17 18 19 20 21 22 23 24 25 26 27 28 29
2 6 3 6 9 4 1 4 8 8

NO.	DATE	REVISIONS	APPROVED
1	4-22-88	FINAL DRAWING	

DESIGNED W TYNER
DRAWN DWRIGHT
CHECKED W TYNER
APPROVED
APPROVED
DATE MAY 31, 1985

MOLZEN-CORBIN
STANLEY CONSULTANTS
A JOINT VENTURE

1/2"=1'-0" 1/4"=1'-0" 0 1' 2' 3' 4' 0 4' 8' 12'
GRAPHIC SCALE

CITY OF ALBUQUERQUE, NEW MEXICO
SOLIDS HANDLING FACILITIES
PHASE II B-3, CONTRACT 1

INTERIM SLUDGE DEWATERING FACILITIES
DEWATERING BUILDING
GROUND FLOOR PLAN

M-C NO.
S-02
14 OF 112
SC NO. 8496-S2

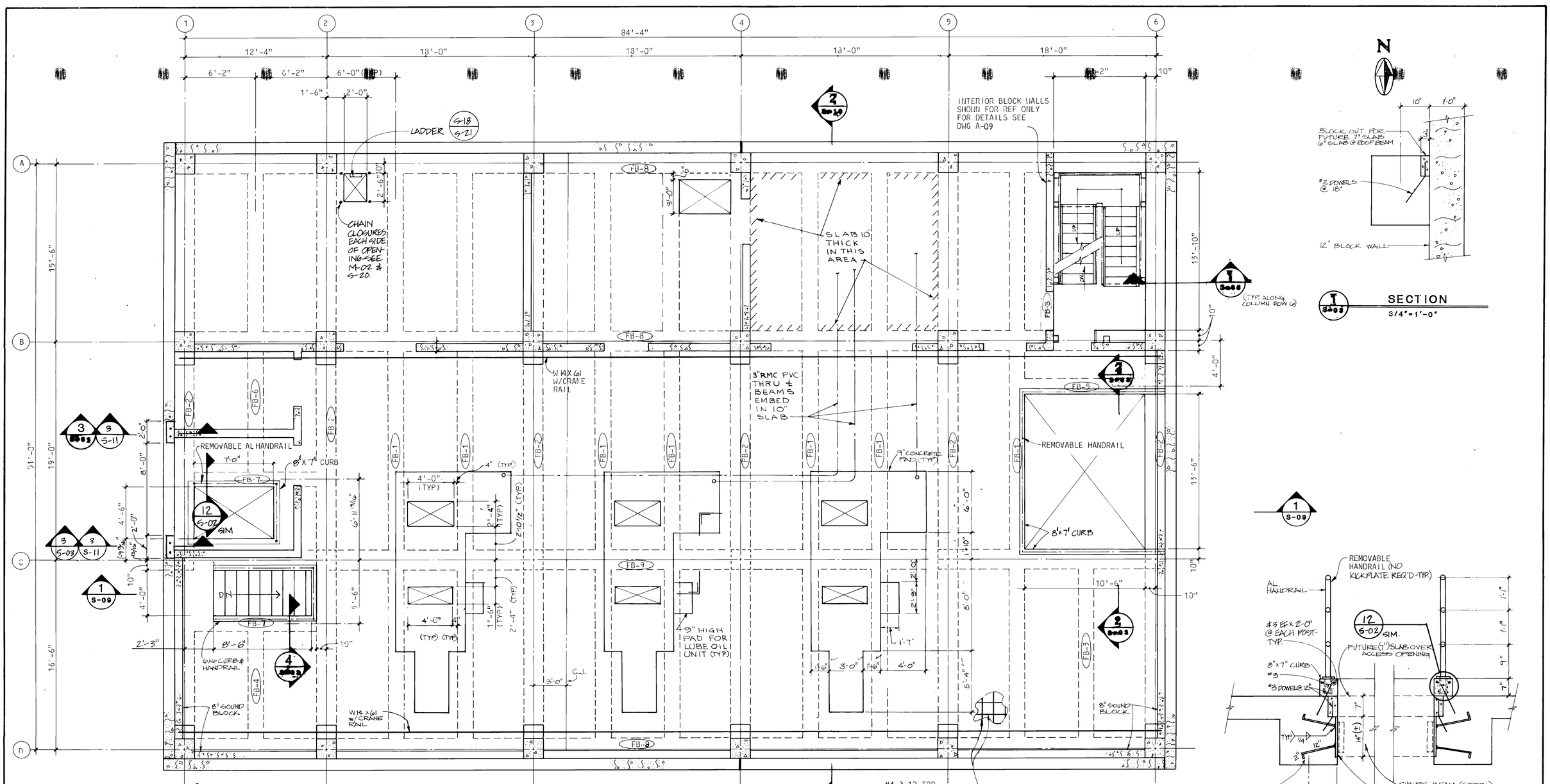

SECOND FLOOR PLAN
1/4"=1'0"

SECTION
3/4"=1'-0"

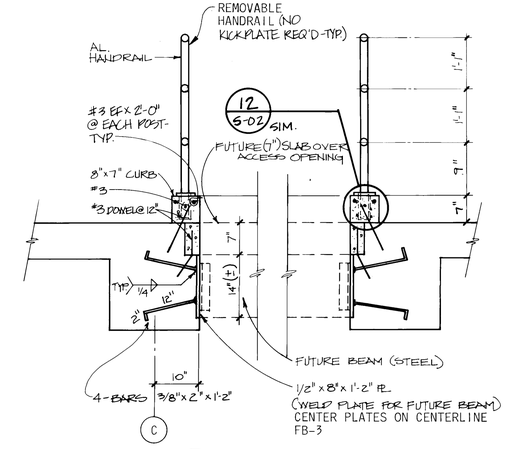

SECTION
3/4"=1'-0"

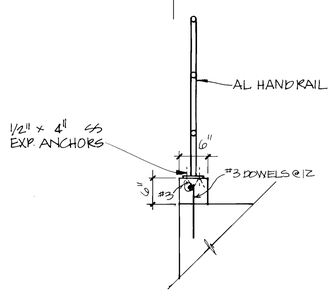

SECTION
3/4"=1'0"

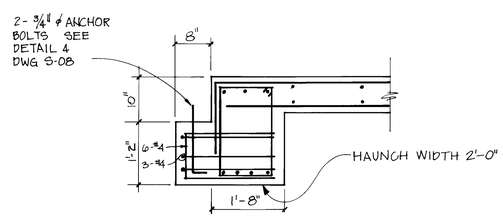

SECTION
3/4"=1'0"

NOTES:

1. FOR FLOOR DRAINS AND FLOOR SLOPE LINES, SEE DRAWING P-02.
2. SEE DRAWING H-03 FOR BOILER ROOM FLOOR PENETRATIONS.
3. FOR LOCATION OF SOUND BLOCK AND INTERIOR BLOCK WALL VERTICAL REINFORCING DOWELS, SEE DRAWING A-09.

RECORD DRAWING	
DATE: AUG. 1988	DRAFTED BY: MCA

THESE RECORD DRAWINGS HAVE BEEN PREPARED, IN PART, ON THE BASIS OF INFORMATION COMPILED AND FURNISHED BY OTHERS. THE ENGINEER WILL NOT BE RESPONSIBLE FOR ANY ERRORS OR OMISSIONS WHICH HAVE BEEN INCORPORATED INTO THIS DOCUMENT AS A RESULT.

RICHARD E. WITTER — NEW MEXICO — 8122 — REGISTERED PROFESSIONAL ENGINEER

1 2 3 4 5 6 7 8 9 10 11 12 13 14 15 16 17 18 19 20 21 22 23 24 25 26 27 28 29
2 6 3 6 9 4 1 5 6 8

NO.	DATE	REVISIONS	APPROVED
1	4-22-88	FINAL DRAWING	

DESIGNED W TYNER
DRAWN DWRIGHT
CHECKED W TYNER
APPROVED
APPROVED
DATE MAY 31, 1988

MOLZEN-CORBIN
STANLEY CONSULTANTS
A JOINT VENTURE

3/4"=1'-0"
1/4"=1'-0"
GRAPHIC SCALE

CITY OF ALBUQUERQUE, NEW MEXICO
SOLIDS HANDLING FACILITIES
PHASE II B-3, CONTRACT 1

INTERIM SLUDGE DEWATERING FACILITIES
DEWATERING BUILDING
SECOND FLOOR PLAN

M-C NO.
S-03
15 of 112
SC NO. 8496-S3

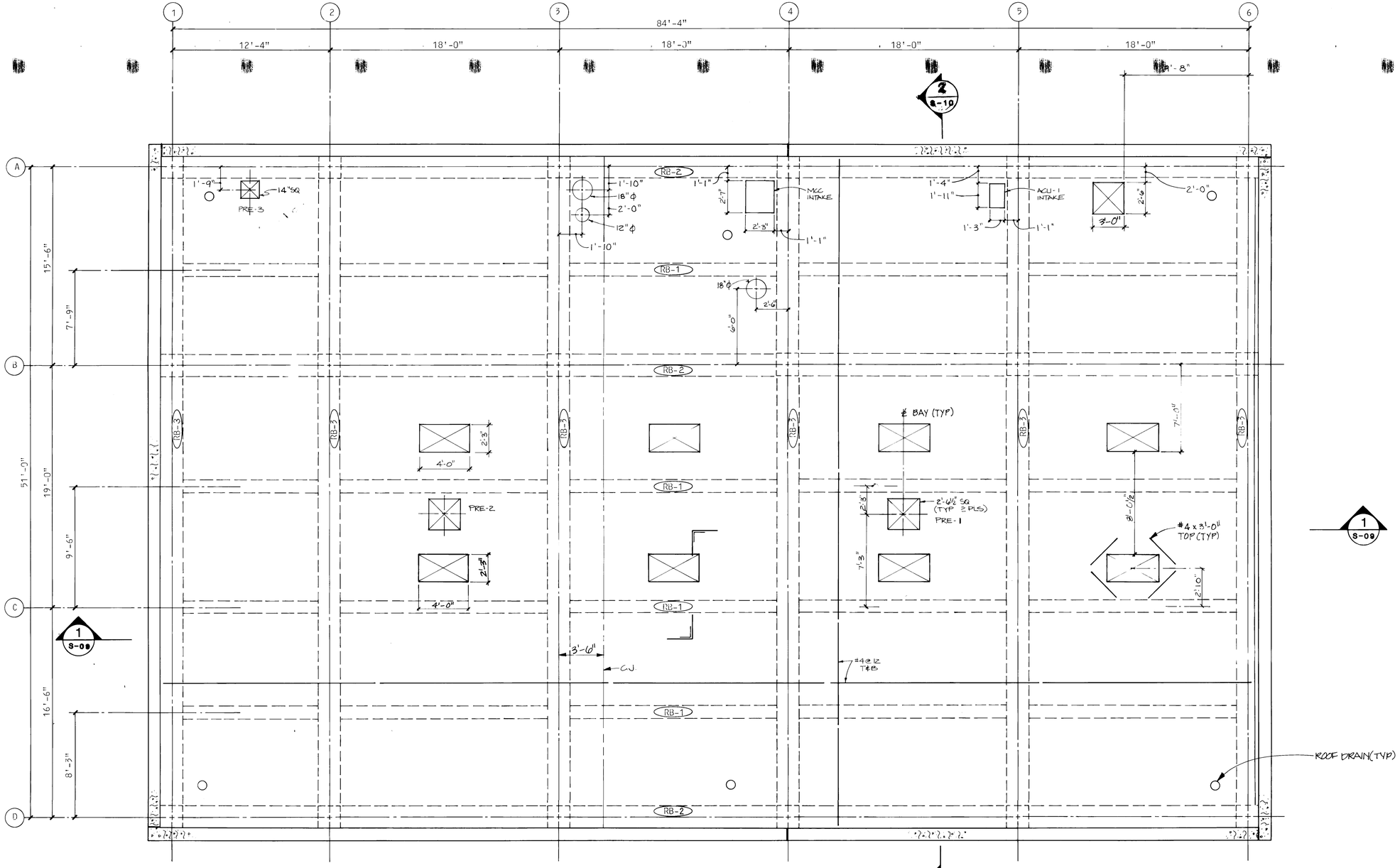

ROOF PLAN

1/4"=1'0"

NOTE:

SEE DRAWING A-06 FOR ROOF SLOPE AND ROOF DRAIN LOCATIONS. SEE DRAWING H-02 FOR HVAC EQUIPMENT AND ROOF PENETRATIONS.

RECORD DRAWING

DATE:	DRAFTED BY:
AUG. 1988	MCA

THESE RECORD DRAWINGS HAVE BEEN PREPARED, IN PART, ON THE BASIS OF INFORMATION COMPILED AND FURNISHED BY OTHERS. THE ENGINEER WILL NOT BE RESPONSIBLE FOR ANY ERRORS OR OMISSIONS WHICH HAVE BEEN INCORPORATED INTO THIS DOCUMENT AS A RESULT.

RICHARD E. WITT NEW MEXICO REGISTERED PROFESSIONAL ENGINEER

1 2 3 4 5 6 7 8 9 10 11 12 13 14 15 16 17 18 19 20 21 22 23 24 25 26 27 28 29
36 3 6 9 4 1 6 8 8

NO.	DATE	REVISIONS	APPROVED
1	4-22-88	FINAL DRAWING	

DESIGNED W TYNER
DRAWN DWRIGHT
CHECKED W TYNER
APPROVED
APPROVED
DATE MAY 31, 1985

MOLZEN-CORBIN
STANLEY CONSULTANTS
A JOINT VENTURE

1/4"=1'-0"
0 4' 6' 8'
GRAPHIC SCALE

CITY OF ALBUQUERQUE, NEW MEXICO
SOLIDS HANDLING FACILITIES
PHASE II B-3, CONTRACT 1

INTERIM SLUDGE DEWATERING FACILITIES
DEWATERING BUILDING
ROOF PLAN

M-C NO. S-04 16 OF 112
SC NO. 8496-S4

© STANLEY CONSULTANTS

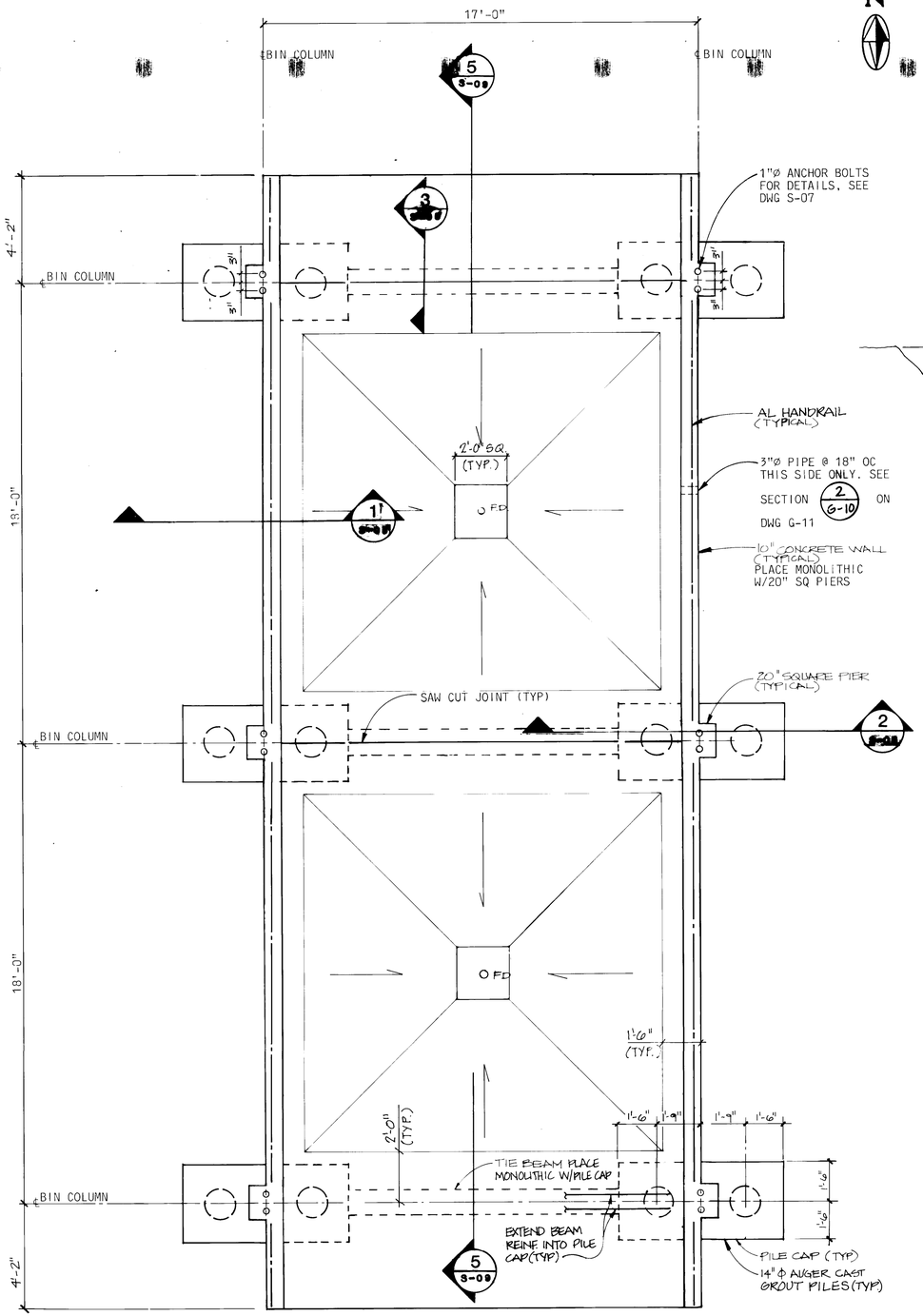

FOUNDATION PLAN
3/8"=1'-0"

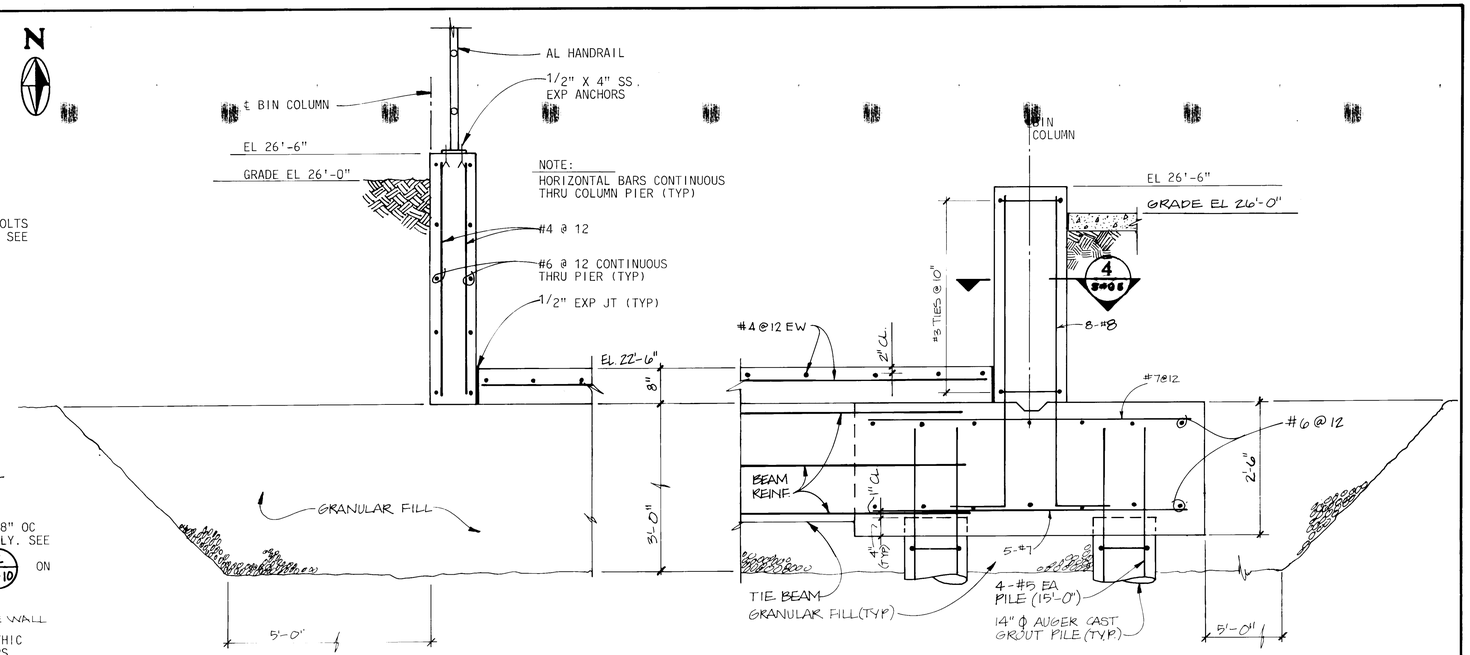

1 S-05 **SECTION** 3/4"=1'-0"

2 S-05 **SECTION** 3/4"=1'-0"

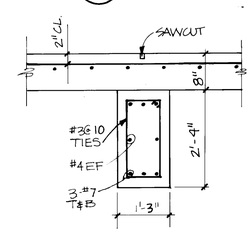

3 S-05 **SECTION** 3/4"=1'-0"

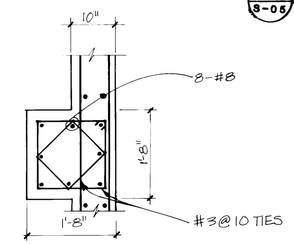

4 S-05 **SECTION** 3/4"=1'-0"

NOTES:

SEE DRAWING G-11 FOR DRAIN HOLE LOCATIONS THRU FOUNDATION WALL.

SEE DRAWING P-01 FOR FLOOR DRAINS AND ELEVATIONS.

RECORD DRAWING

DATE:	DRAFTED BY:
AUG. 1988	MCA

THESE RECORD DRAWINGS HAVE BEEN PREPARED, IN PART, ON THE BASIS OF INFORMATION COMPILED AND FURNISHED BY OTHERS. THE ENGINEER WILL NOT BE RESPONSIBLE FOR ANY ERRORS OR OMISSIONS WHICH HAVE BEEN INCORPORATED INTO THIS DOCUMENT AS A RESULT.

RICHARD E. WITTER NEW MEXICO 5720 REGISTERED PROFESSIONAL ENGINEER

1 2 3 4 5 6 7 8 9 10 11 12 13 14 15 16 17 18 19 20 21 22 23 24 25 26 27 28 29
2 6 3 6 9 4 1 7 8 8

NO.	DATE	REVISIONS	APPROVED
1	4-22-88	FINAL DRAWING	

DESIGNED W. TYNER
DRAWN D.G. JARRETT
CHECKED W. TYNER
APPROVED
APPROVED
DATE MAY 31, 1985

MOLZEN-CORBIN
STANLEY CONSULTANTS
A JOINT VENTURE

3/4"=1'-0"
3/8"=1'-0"
0 1' 2' 3'
0 1" 2" 3" 4"
GRAPHIC SCALE

CITY OF ALBUQUERQUE, NEW MEXICO
SOLIDS HANDLING FACILITIES
PHASE II B-3, CONTRACT 1

INTERIM SLUDGE DEWATERING FACILITIES
SLUDGE LOADING AREA
FOUNDATION PLAN AND DETAILS

M-C NO.
S-05
17 of 112
SC NO. 8496-S5

© STANLEY CONSULTANTS

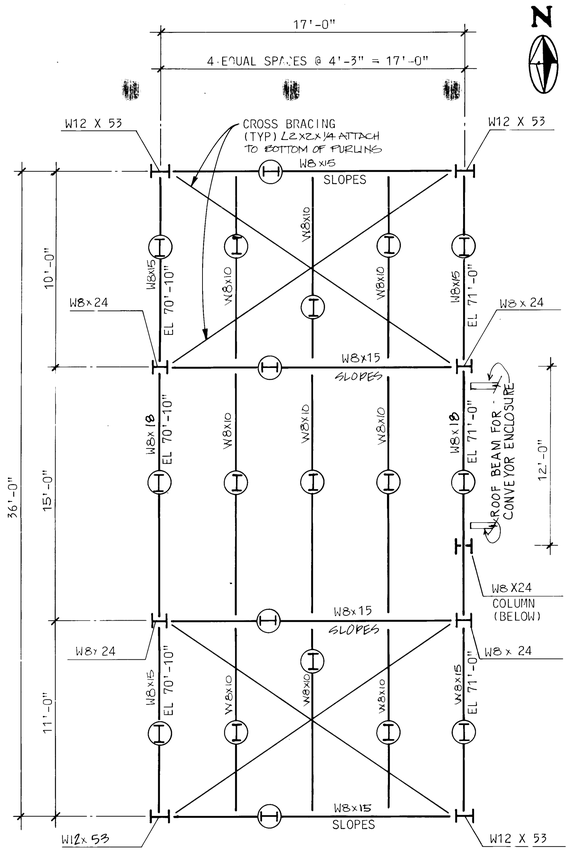

ROOF PLAN @ EL 71'-0"

TOS EL 71'-0" UNO

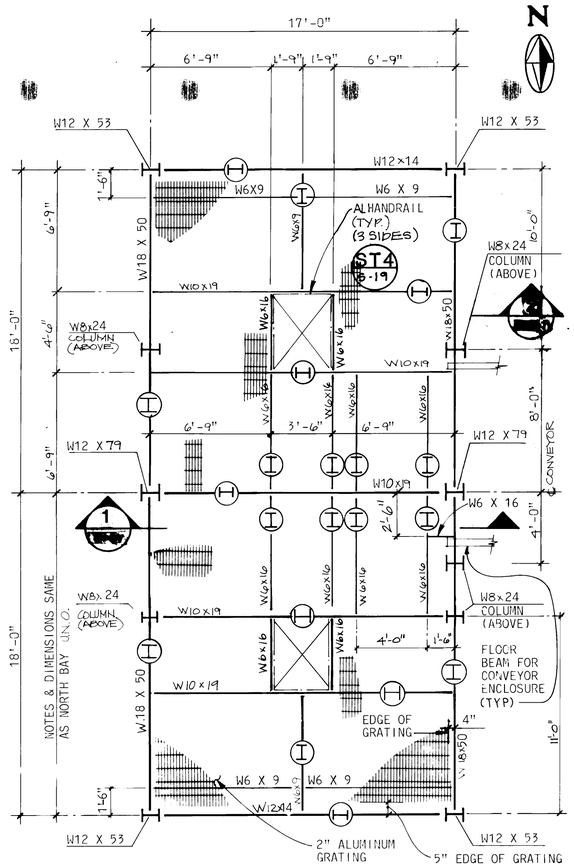

PLAN @ EL 62'-0"

TOS EL 61'-10"
TOG EL 62'-0"

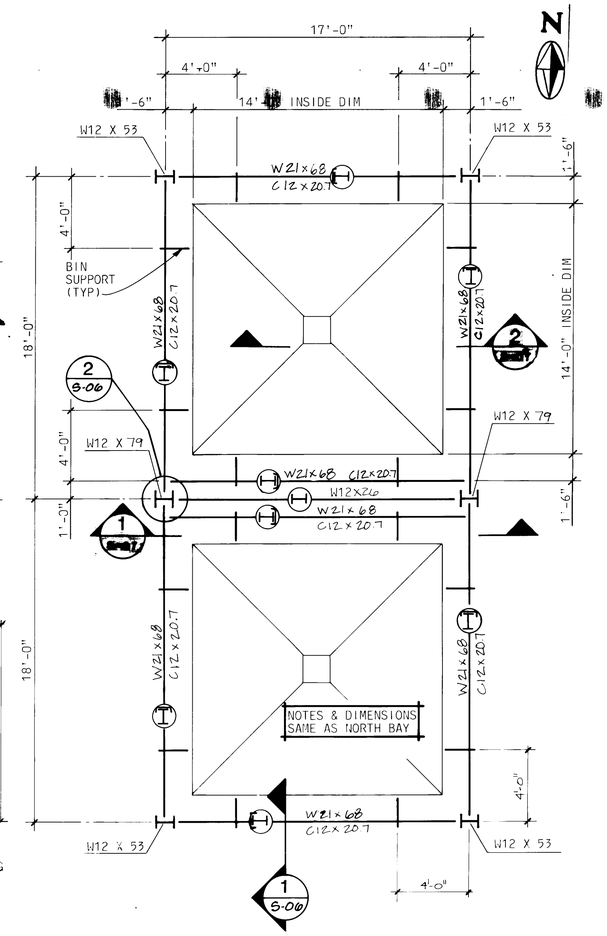

PLAN @ EL 49'-0"

TOS EL 49'-0"

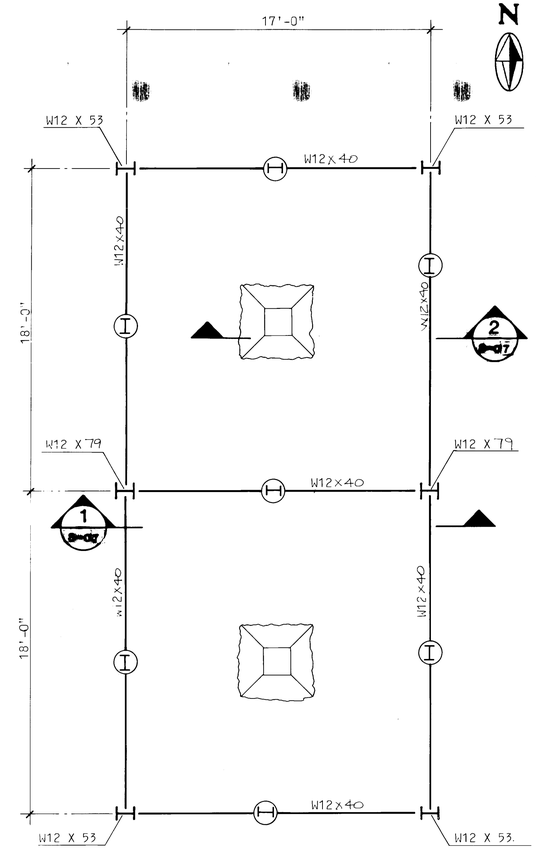

PLAN @ EL 37'-6"

TOS EL 37'-6"

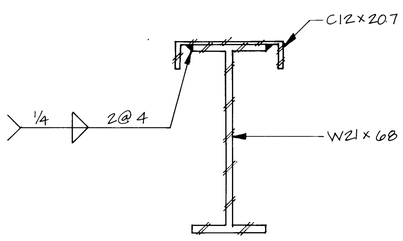

1 / S-06 SECTION

1 1/2" = 1'-0"

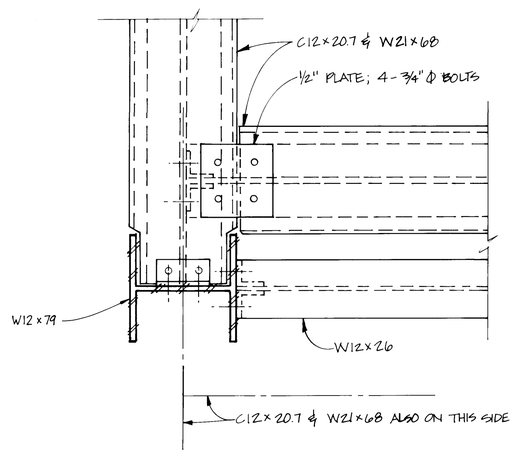

2 / S-06 DETAIL

1 1/2" = 1'-0"

RECORD DRAWING

DATE:	DRAFTED BY:
AUG. 1988	MCA

THESE RECORD DRAWINGS HAVE BEEN PREPARED, IN PART, ON THE BASIS OF INFORMATION COMPILED AND FURNISHED BY OTHERS. THE ENGINEER WILL NOT BE RESPONSIBLE FOR ANY ERRORS OR OMISSIONS WHICH HAVE BEEN INCORPORATED INTO THIS DOCUMENT AS A RESULT.

RICHARD E. WITTER NEW MEXICO 8722 REGISTERED PROFESSIONAL ENGINEER

1 2 3 4 5 6 7 8 9 10 11 12 13 14 15 16 17 18 19 20 21 22 23 24 25 26 27 28 29
2 6 3 6 7 4 1 8 8 8

NO.	DATE	REVISIONS	APPROVED
1	4-22-88	FINAL DRAWING	

DESIGNED W TYNER
DRAWN B.G. JARRETT
CHECKED W TYNER
APPROVED
APPROVED
DATE MAY 31, 1985

MOLZEN-CORBIN
STANLEY CONSULTANTS
A JOINT VENTURE

1-1/2" = 1'-0"
1/4" = 1'-0"
GRAPHIC SCALE

CITY OF ALBUQUERQUE, NEW MEXICO
SOLIDS HANDLING FACILITIES
PHASE II B-3, CONTRACT 1

INTERIM SLUDGE DEWATERING FACILITIES
SLUDGE LOADING AREA
FRAMING PLANS

M-C NO.
S-06
18 OF 112
SC NO. 8496-S6

© STANLEY CONSULTANTS

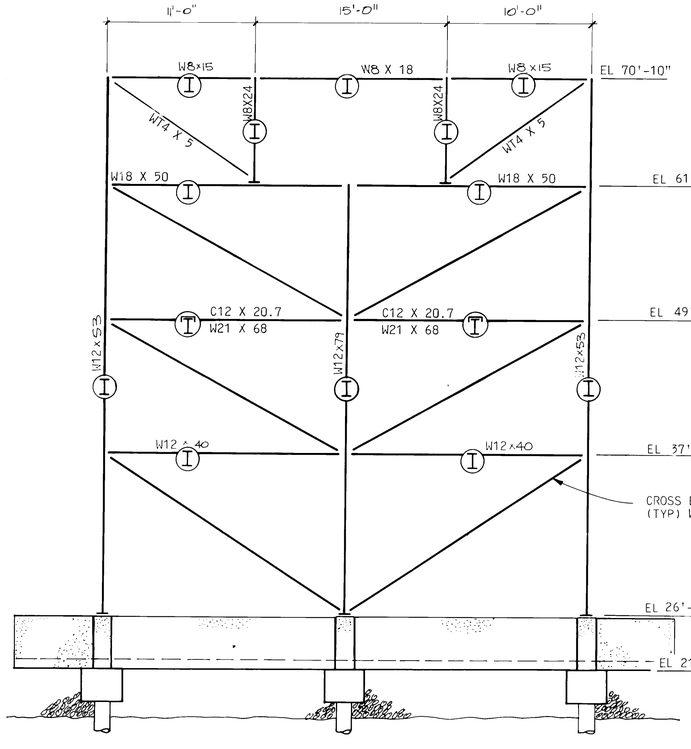

WEST ELEVATION (LOOKING EAST)

3/16"=1'-0"

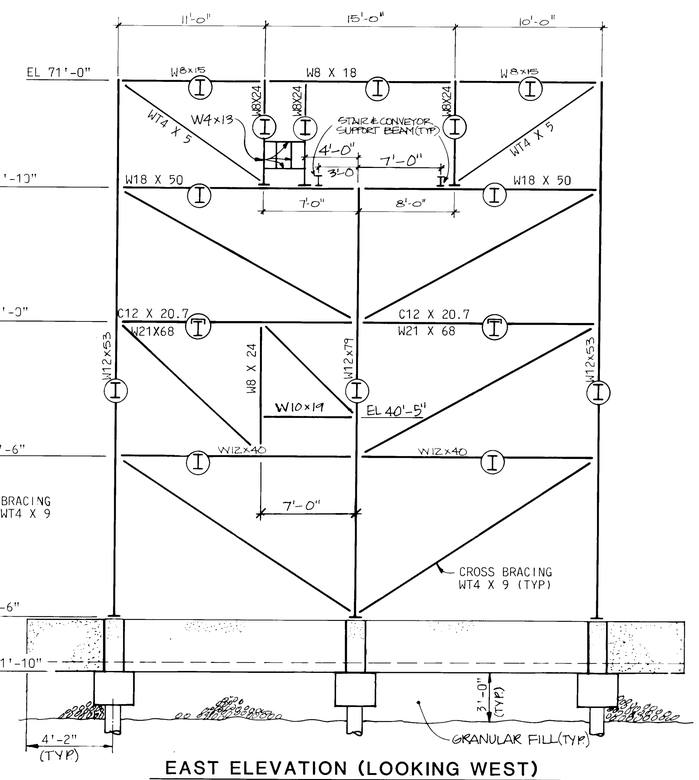

EAST ELEVATION (LOOKING WEST)

3/16"=1'-0"

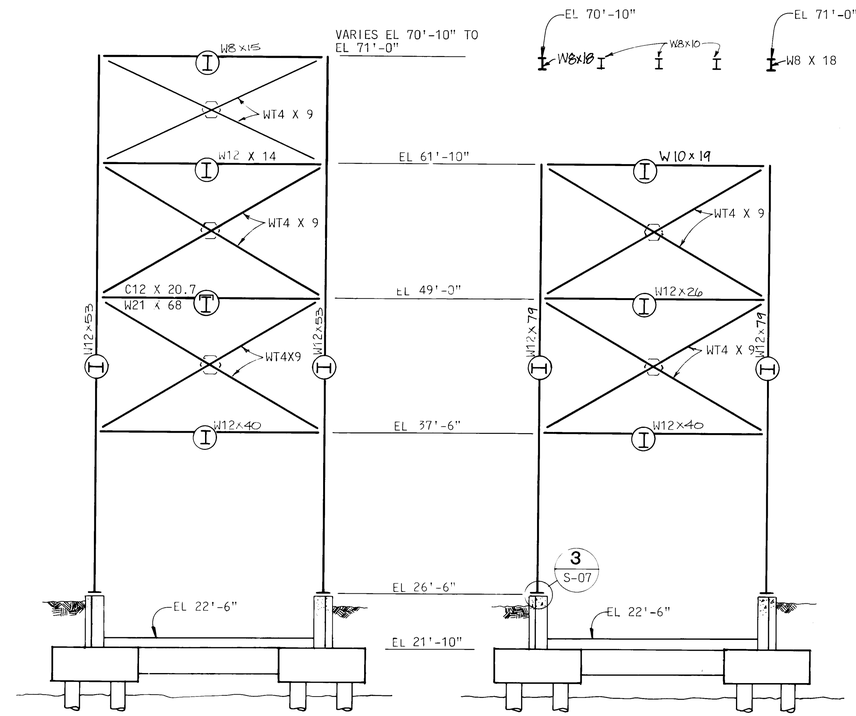

NORTH ELEVATION (LOOKING SOUTH)

SOUTH ELEVATION (LOOKING NORTH)

3/16"=1'-0"

1 S-06 SECTION

3/16"=1'-0"

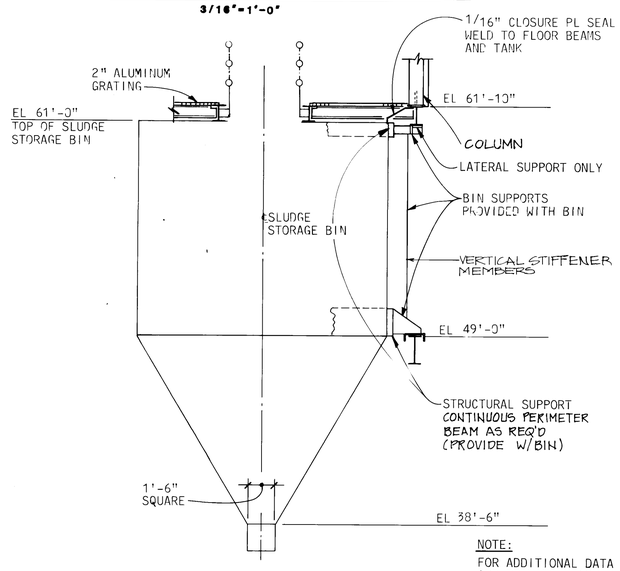

NOTE:
FOR ADDITIONAL DATA
SEE DRAWING M-10

2 S-06 SECTION

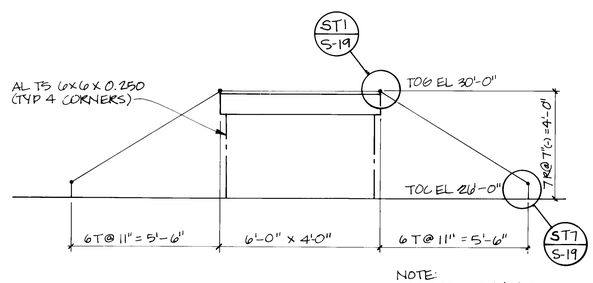

NOTE:
FOR LOCATION & PLAN
SEE DWG A-02

4 A-02 SECTION

SCALE 3/8"=1'-0"

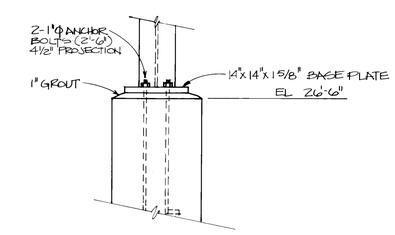

3 S-07 BASE PLATE (TYP ALL COL)

3/4"=1'-0"

NOTES:
1. SEE DWG H-07 FOR 18" Φ PIPE SUPPORT DETAILS.

RECORD DRAWING

DATE:	DRAFTED BY:
AUG. 1988	MCA

THESE RECORD DRAWINGS HAVE BEEN PREPARED, IN PART, ON THE BASIS OF INFORMATION COMPILED AND FURNISHED BY OTHERS. THE ENGINEER WILL NOT BE RESPONSIBLE FOR ANY ERRORS OR OMISSIONS WHICH HAVE BEEN INCORPORATED INTO THIS DOCUMENT AS A RESULT.

RICHARD E. WITTER NEW MEXICO 8722 REGISTERED PROFESSIONAL ENGINEER

1 2 3 4 5 6 7 8 9 10 11 12 13 14 15 16 17 18 19 20 21 22 23 24 25 26 27 28 29
26 3 6 7 4 1 9 8 8

NO.	DATE	REVISIONS	APPROVED
1	4-22-88	FINAL DRAWING	

DESIGNED W TYNER
DRAWN B.G. JARRETT
CHECKED W TYNER
APPROVED
APPROVED
DATE MAY 31, 1985

MOLZEN-CORBIN
STANLEY CONSULTANTS
A JOINT VENTURE

3/16"=1'-0"
3/4"=1'-0"
0 1' 2' 4' 6' 8' 10'
0 1' 2' 3
GRAPHIC SCALE

CITY OF ALBUQUERQUE, NEW MEXICO
SOLIDS HANDLING FACILITIES
PHASE II B-3, CONTRACT 1

INTERIM SLUDGE DEWATERING FACILITIES
SLUDGE LOADING AREA
FRAMING ELEVATIONS

M-C NO.
S-07
19 OF 112
SC NO. 8496-S7

© STANLEY CONSULTANTS

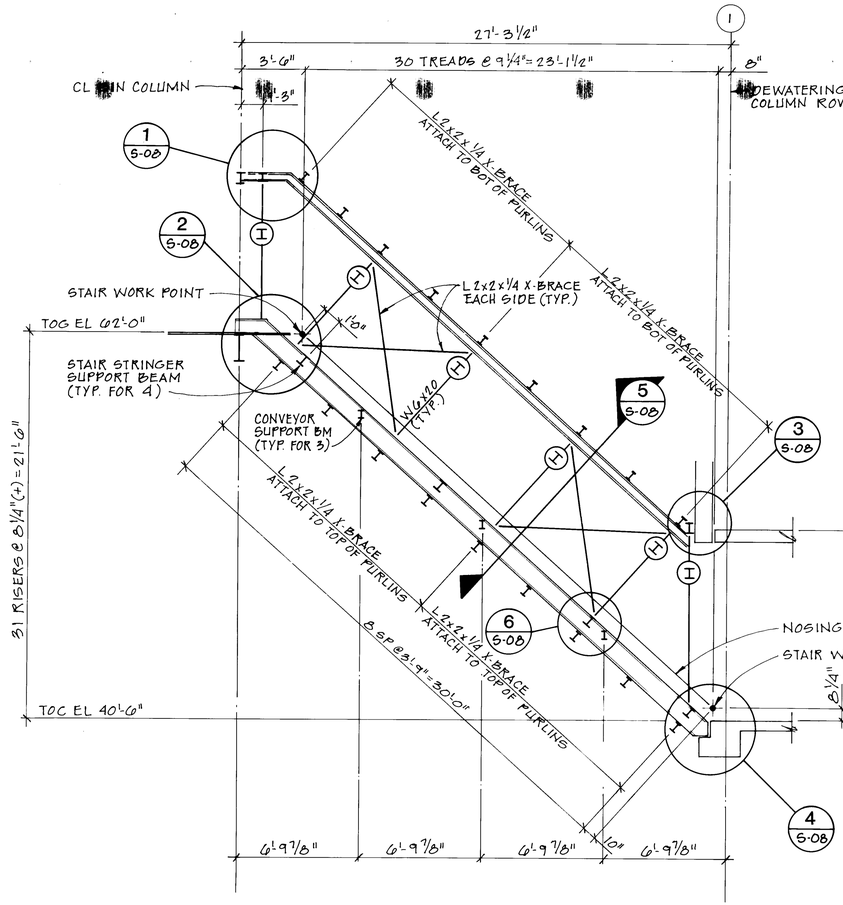

BIN FEED CONVEYOR ENCLOSURE - SOUTH ELEVATION

1/4" = 1'-0"

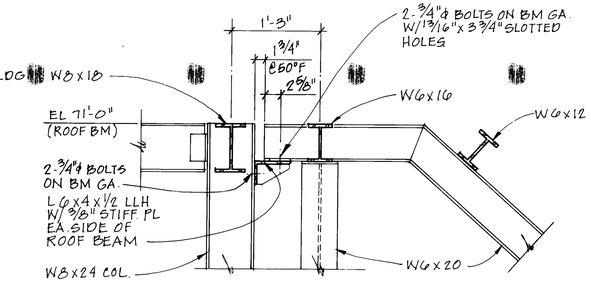

1 / S-08 DETAIL
1" = 1'-0"

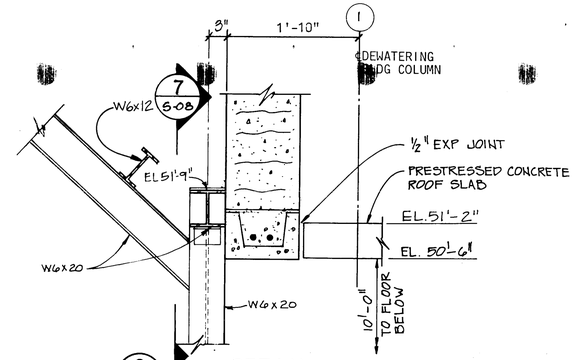

3 / S-08 DETAIL
1" = 1'-0"

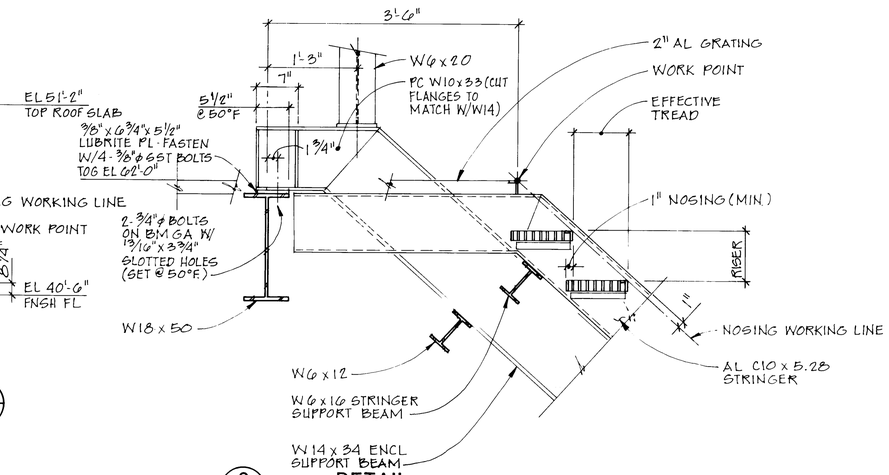

2 / S-08 DETAIL
1" = 1'-0"

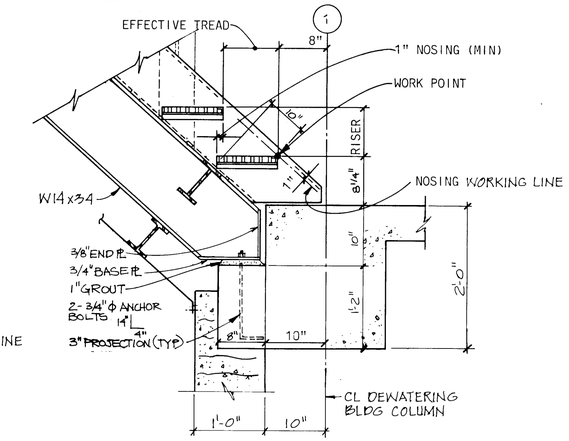

4 / S-08 DETAIL
1" = 1'-0"

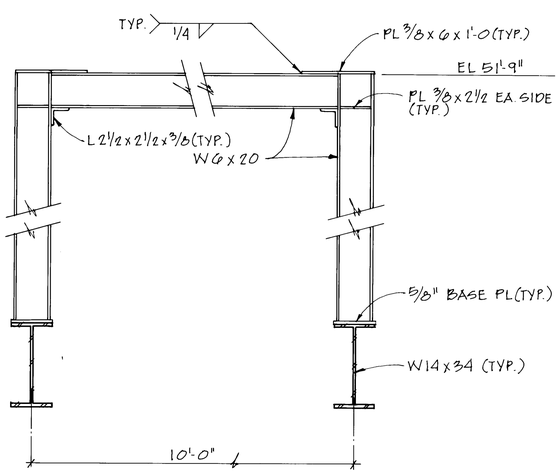

7 / S-08 SECTION
1" = 1'-0"

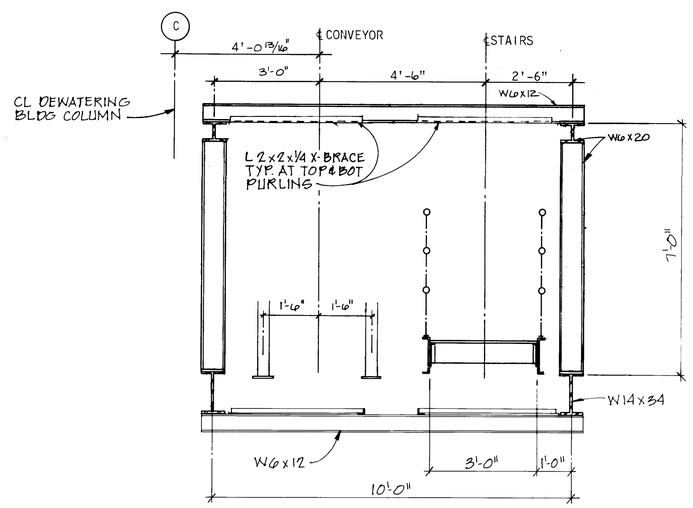

5 / S-08 SECTION
1/2" = 1'-0"

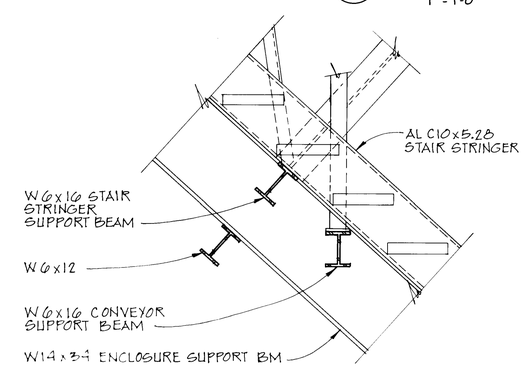

6 / S-08 DETAIL
1" = 1'-0"

RECORD DRAWING

DATE: AUG. 1988	DRAFTED BY: MCA

THESE RECORD DRAWINGS HAVE BEEN PREPARED, IN PART, ON THE BASIS OF INFORMATION COMPILED AND FURNISHED BY OTHERS. THE ENGINEER WILL NOT BE RESPONSIBLE FOR ANY ERRORS OR OMISSIONS WHICH HAVE BEEN INCORPORATED INTO THIS DOCUMENT AS A RESULT.

RICHARD E. WITTER NEW MEXICO 8722 REGISTERED PROFESSIONAL ENGINEER

1 2 3 4 5 6 7 8 9 10 11 12 13 14 15 16 17 18 19 20 21 22 23 24 25 26 27 28 29
2 6 3 6 9 4 2 0 8 8

NO.	DATE	REVISIONS	APPROVED
1	4-22-88	FINAL DRAWING	

DESIGNED W. TYNER
DRAWN R. MURPHY
CHECKED W. TYNER
APPROVED
APPROVED
DATE MAY 31, 1985

MOLZEN-CORBIN
STANLEY CONSULTANTS
A JOINT VENTURE

1"=1'-0"
1/4"=1'-0"
0 1' 2'
0 4' 6' 8'
GRAPHIC SCALE

CITY OF ALBUQUERQUE, NEW MEXICO
SOLIDS HANDLING FACILITIES
PHASE II B-3, CONTRACT 1

INTERIM SLUDGE DEWATERING FACILITIES
BIN FEED CONVEYOR ENCLOSURE DETAILS

M-C NO. S-08
20 OF 112
SC NO. 8496-S8

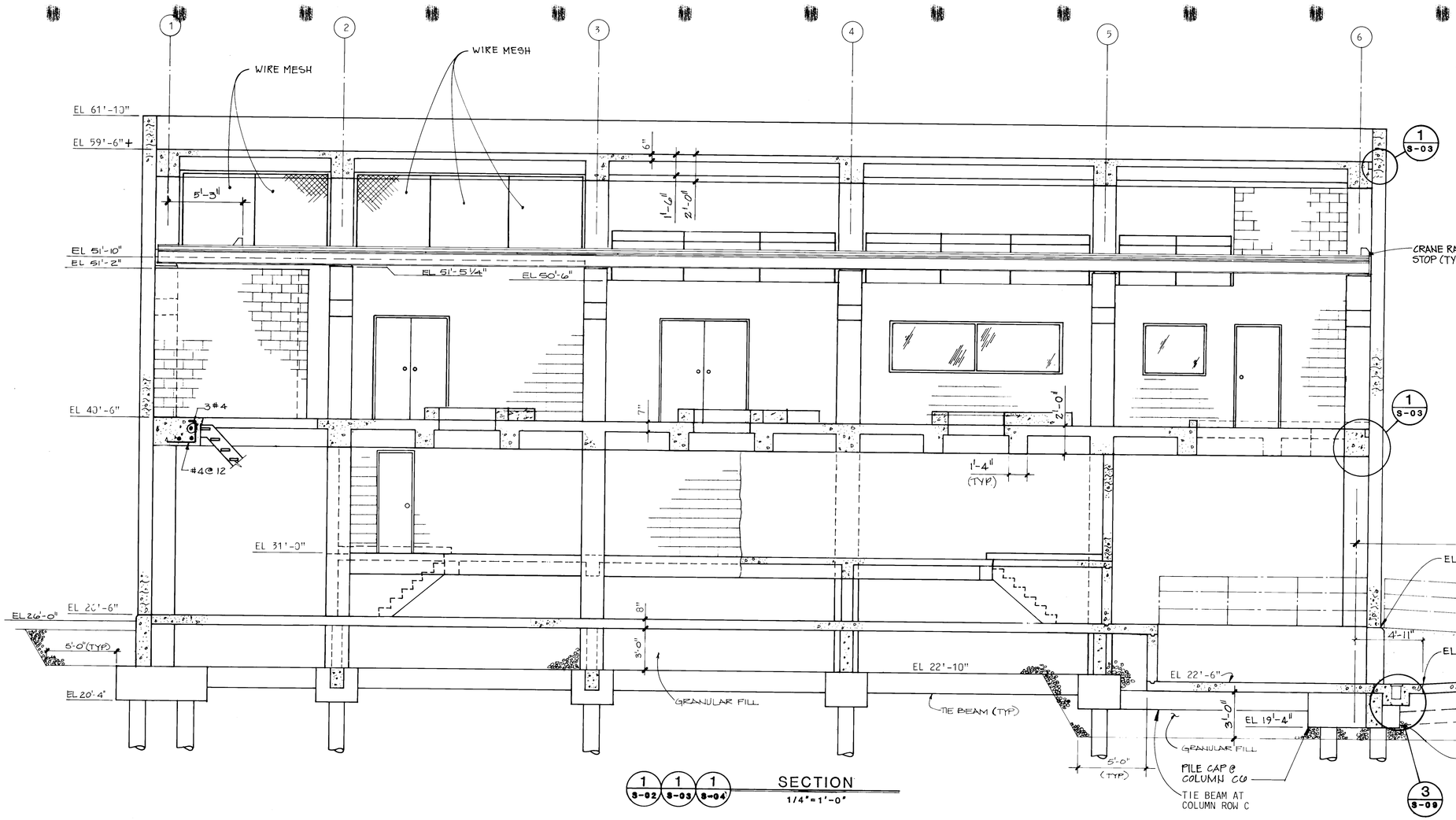

1 1 1 / S-02 S-03 S-04 SECTION
1/4"=1'-0"

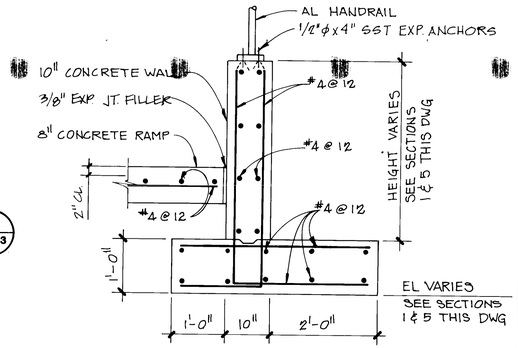

2 / S-09 SECTION
3/4"=1'-0"

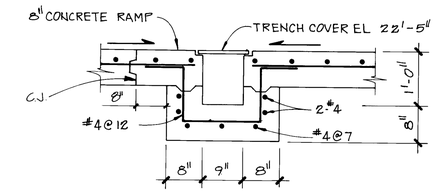

3 / S-09 DETAIL
3/4"=1'-0"

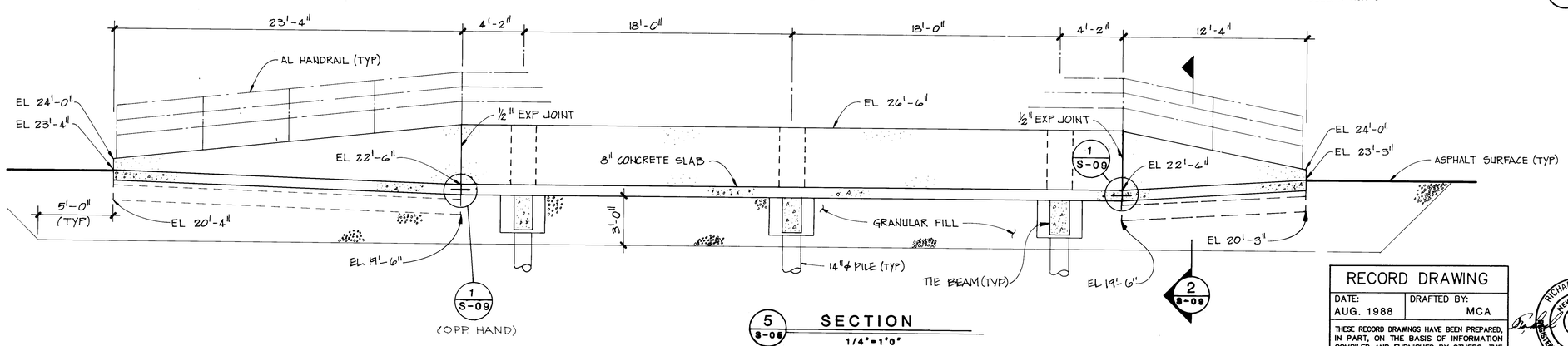

5 / S-05 SECTION
1/4"=1'-0"

NOTE:
SEE DRAWING S-02 FOR PLAN LAYOUT OF TRENCH.

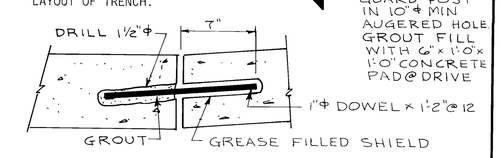

1 / S-09 DETAIL
NO SCALE

NOTES:
1. CONCRETE BLOCK WALS SHOWN FOR REFERENCE ONLY. FOR DETAILS SEE DRAWING A-09

RECORD DRAWING	
DATE: AUG. 1988	DRAFTED BY: MCA

THESE RECORD DRAWINGS HAVE BEEN PREPARED, IN PART, ON THE BASIS OF INFORMATION COMPILED AND FURNISHED BY OTHERS. THE ENGINEER WILL NOT BE RESPONSIBLE FOR ANY ERRORS OR OMISSIONS WHICH HAVE BEEN INCORPORATED INTO THIS DOCUMENT AS A RESULT.

RICHARD E. WITTER NEW MEXICO 8722 REGISTERED PROFESSIONAL ENGINEER

1 2 3 4 5 6 7 8 9 10 11 12 13 14 15 16 17 18 19 20 21 22 23 24 25 26 27 28 29
2 6 3 6 9 4 2 1 8 8

NO.	DATE	REVISIONS	APPROVED
1	4-22-88	FINAL DRAWING	

DESIGNED W TYNER
DRAWN DWRIGHT
CHECKED W TYNER
APPROVED
APPROVED
DATE MAY 31, 1985

MOLZEN-CORBIN
STANLEY CONSULTANTS
A JOINT VENTURE

3/4"=1'-0"
1/4"=1'-0"
0 1' 2' 3'
0 4' 6' 8'
GRAPHIC SCALE

CITY OF ALBUQUERQUE, NEW MEXICO
SOLIDS HANDLING FACILITIES
PHASE II B-3, CONTRACT 1

INTERIM SLUDGE DEWATERING FACILITIES
DEWATERING BUILDING
BUILDING SECTION

M-C NO.
S-09
21 of 112
SC NO. 8496-S9

© STANLEY CONSULTANTS

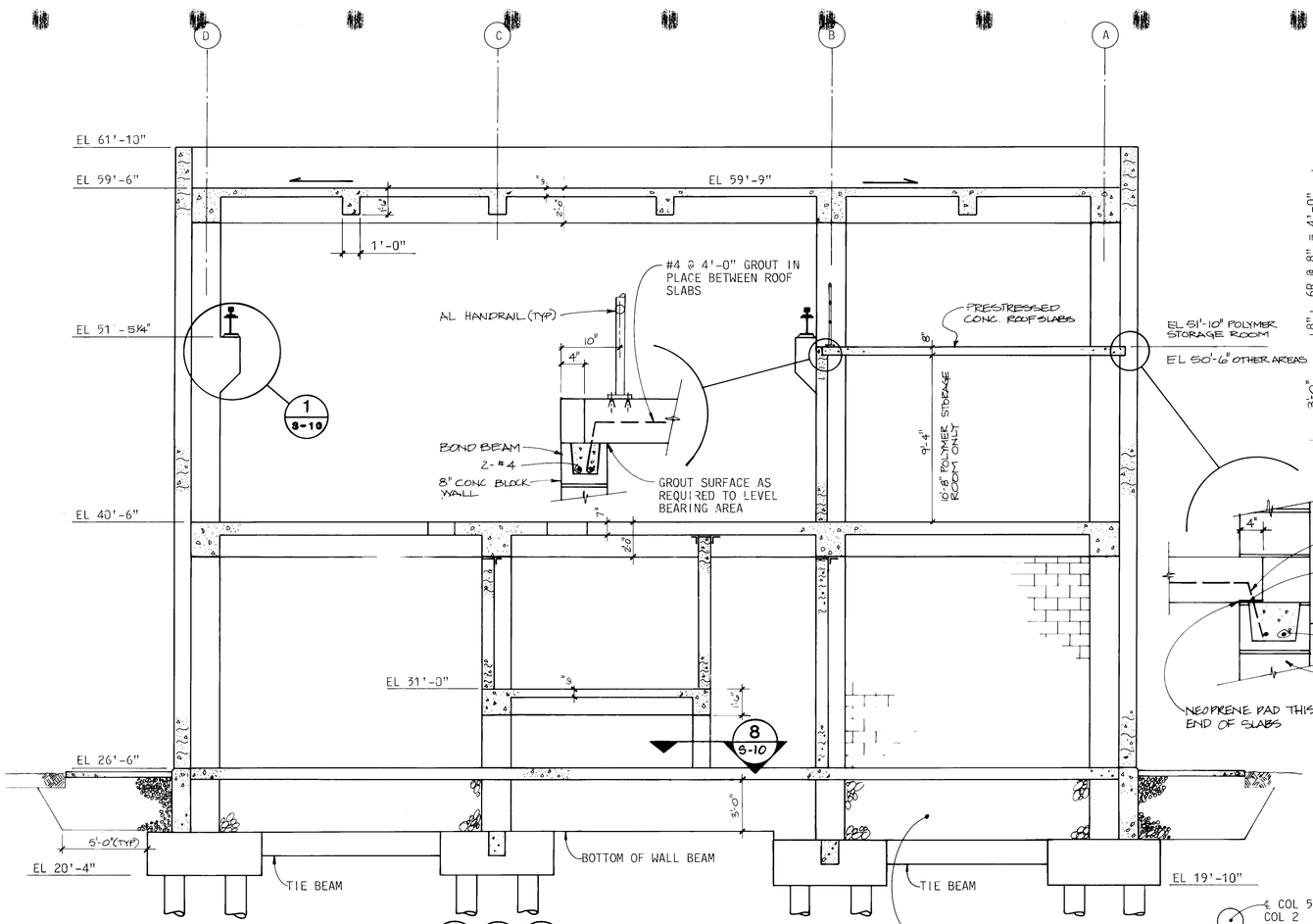

2 2 2 S-02 S-03 S-04 SECTION 1/4"=1'-0"

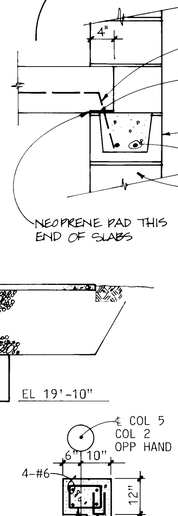

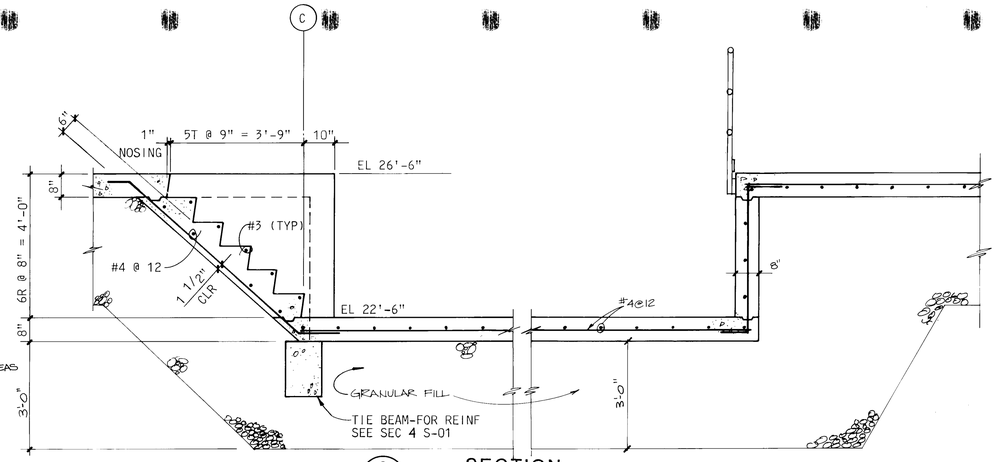

3 S-02 SECTION 1/2"=1'-0"

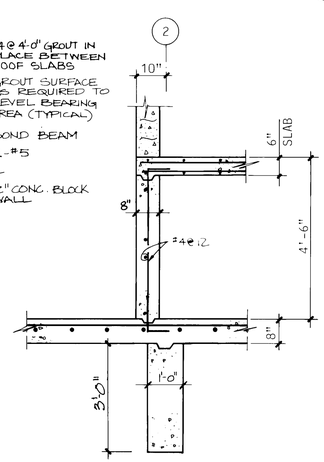

6 S-02 SECTION 1/2"=1'-0"

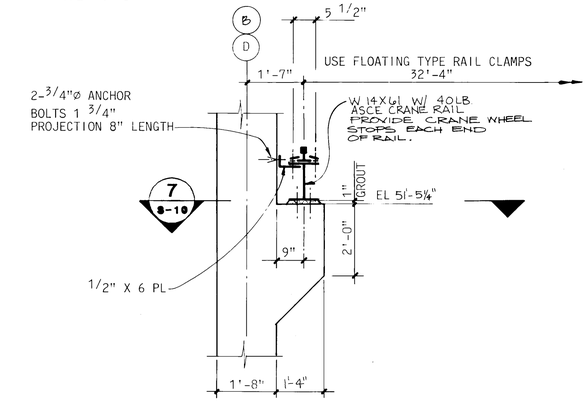

1 S-10 DETAIL 1/2"=1'-0"

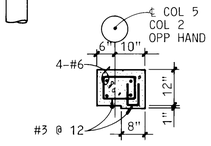

9 S-07 DETAIL 1/2"=1'-0"

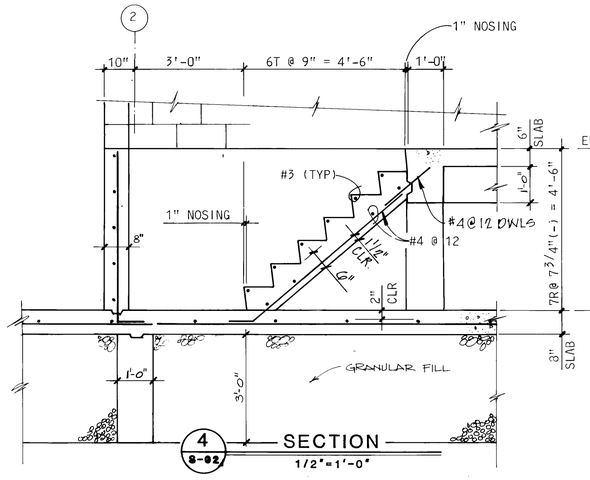

4 S-02 SECTION 1/2"=1'-0"

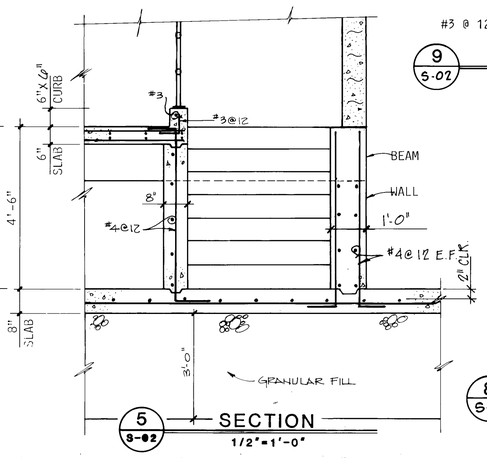

5 S-02 SECTION 1/2"=1'-0"

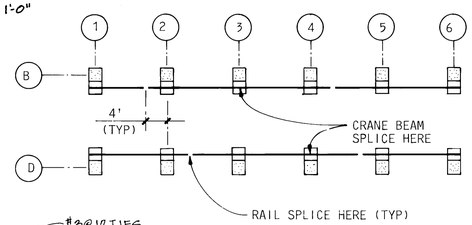

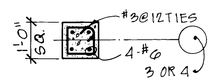

RAIL SPLICE DETAIL

8 S-10 SECTION 1/2"=1'-0"

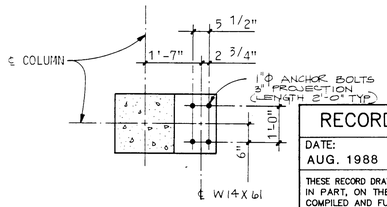

7 S-10 SECTION 1/2"=1'-0"

RECORD DRAWING

DATE:	DRAFTED BY:
AUG. 1988	MCA

THESE RECORD DRAWINGS HAVE BEEN PREPARED, IN PART, ON THE BASIS OF INFORMATION COMPILED AND FURNISHED BY OTHERS. THE ENGINEER WILL NOT BE RESPONSIBLE FOR ANY ERRORS OR OMISSIONS WHICH HAVE BEEN INCORPORATED INTO THIS DOCUMENT AS A RESULT.

NOTES:

1. CONCRETE BLOCK WALLS SHOWN FOR REFERENCE ONLY. FOR DETAILS SEE DRAWING A-09.

RICHARD E. WITTER NEW MEXICO 8722 REGISTERED PROFESSIONAL ENGINEER

1 2 3 4 5 6 7 8 9 10 11 12 13 14 15 16 17 18 19 20 21 22 23 24 25 26 27 28 29
2 6 3 6 9 4 2 2 8 8

NO.	DATE	REVISIONS	APPROVED
1	4-22-88	FINAL DRAWING	

DESIGNED W TYNER
DRAWN DWRIGHT
CHECKED W TYNER
APPROVED
APPROVED
DATE MAY 31, 1988

MOLZEN-CORBIN
STANLEY CONSULTANTS
A JOINT VENTURE

1/2"=1'-0" 1/4"=1'-0" GRAPHIC SCALE 0 1' 2' 3' 4' 0 4' 6' 8'

CITY OF ALBUQUERQUE, NEW MEXICO
SOLIDS HANDLING FACILITIES
PHASE II B-3, CONTRACT 1

INTERIM SLUDGE DEWATERING FACILITIES
DEWATERING BUILDING
BUILDING SECTIONS AND DETAILS

M-C NO.
S-10 22 OF 112
SC NO. 8496-S10

© STANLEY CONSULTANTS

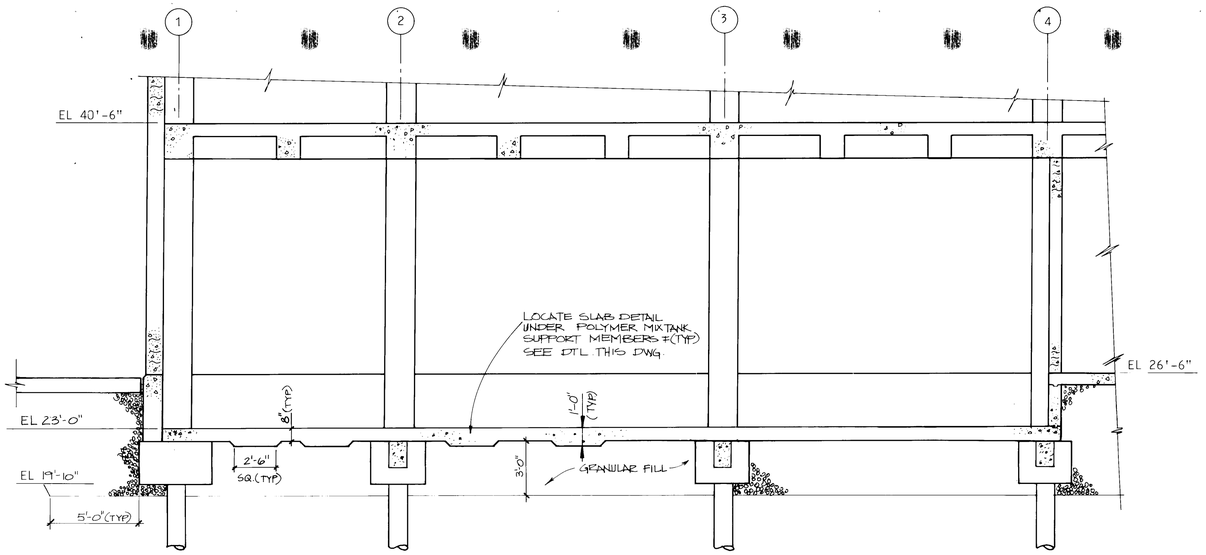

7 S-02 SECTION
1/4"=1'-0"

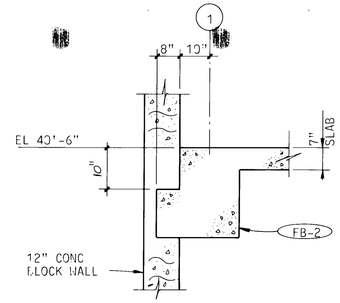

3 S-03 SECTION
1/2"=1'-0"

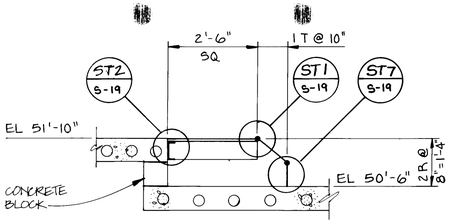

1 S-11 SECTION
1/2"=1'-0"

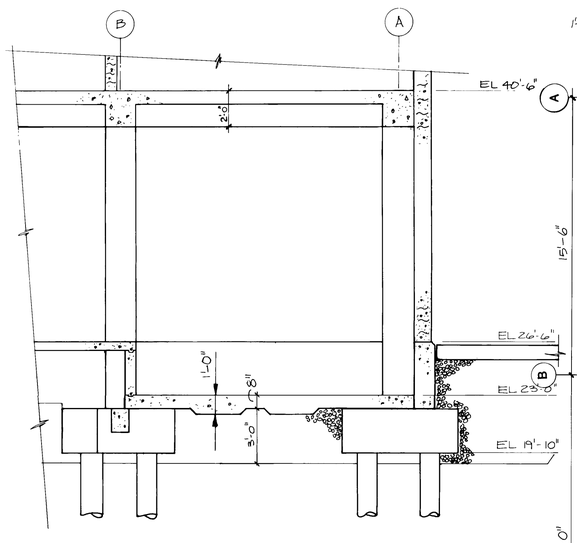

8 S-02 SECTION
1/4"=1'-0"

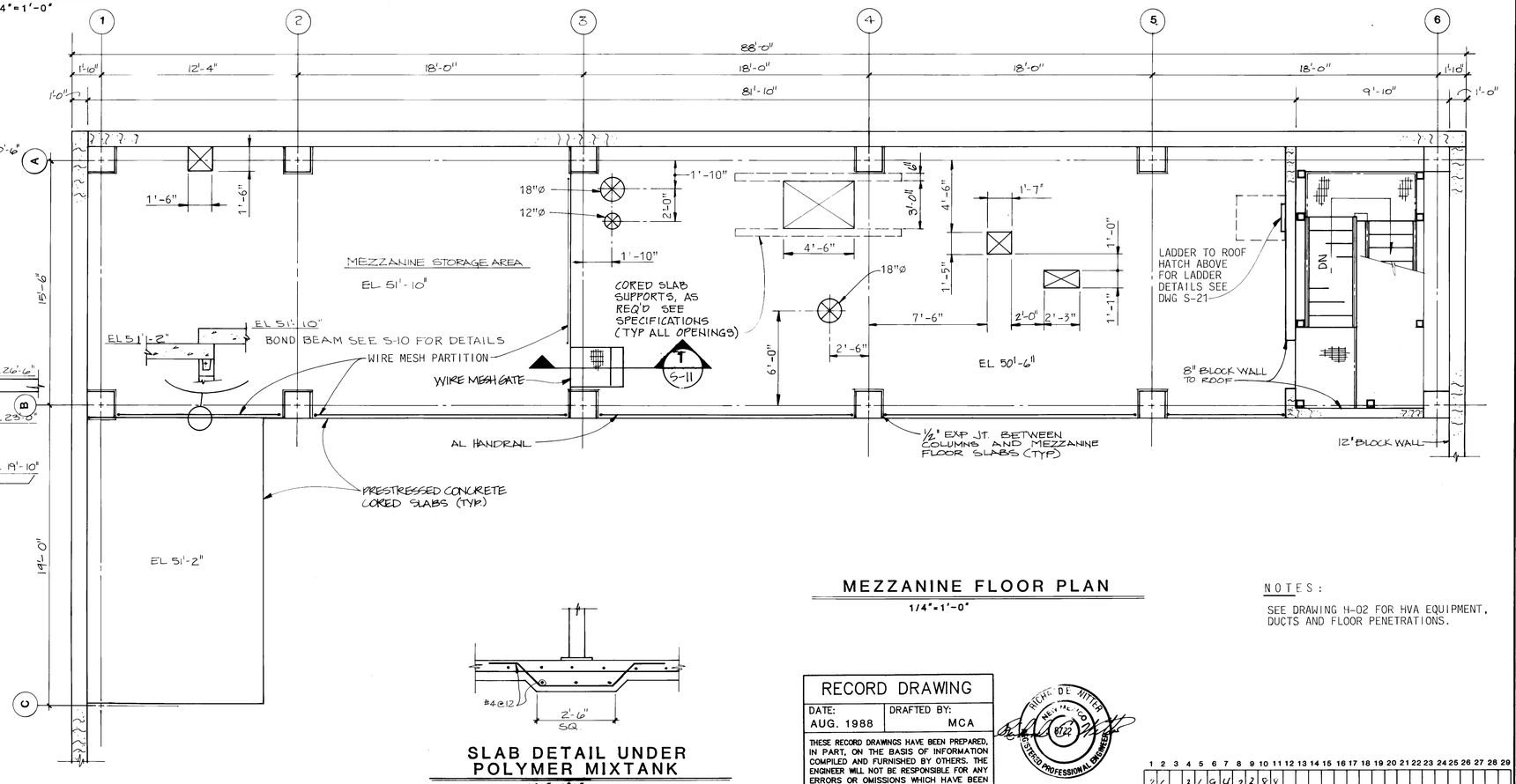

MEZZANINE FLOOR PLAN
1/4"=1'-0"

SLAB DETAIL UNDER POLYMER MIXTANK
1/2"=1'-0"

NOTES:

SEE DRAWING M-02 FOR HVA EQUIPMENT, DUCTS AND FLOOR PENETRATIONS.

RECORD DRAWING

DATE:	DRAFTED BY:
AUG. 1988	MCA

THESE RECORD DRAWINGS HAVE BEEN PREPARED, IN PART, ON THE BASIS OF INFORMATION COMPILED AND FURNISHED BY OTHERS. THE ENGINEER WILL NOT BE RESPONSIBLE FOR ANY ERRORS OR OMISSIONS WHICH HAVE BEEN INCORPORATED INTO THIS DOCUMENT AS A RESULT.

RICHARD DE NITTIS NEW MEXICO 8122 REGISTERED PROFESSIONAL ENGINEER

1 2 3 4 5 6 7 8 9 10 11 12 13 14 15 16 17 18 19 20 21 22 23 24 25 26 27 28 29
2 6 3 6 9 4 2 3 8 8

NO.	DATE	REVISIONS	APPROVED
1	4-22-88	FINAL DRAWING	

DESIGNED W TYNER
DRAWN DWRIGHT
CHECKED W TYNER
APPROVED
APPROVED
DATE MAY 31, 1988

MOLZEN-CORBIN
STANLEY CONSULTANTS
A JOINT VENTURE

1/2"=1'-0"
1/4"=1'-0"
0 1' 2' 3' 4'
0 4' 6' 8'
GRAPHIC SCALE

CITY OF ALBUQUERQUE, NEW MEXICO
SOLIDS HANDLING FACILITIES
PHASE II B-3, CONTRACT 1

INTERIM SLUDGE DEWATERING FACILITIES
DEWATERING BUILDING
MISCELLANEOUS SECTIONS & DETAILS

M-C NO. S-11
23 of 112
SC NO. 8496-S11

© STANLEY CONSULTANTS

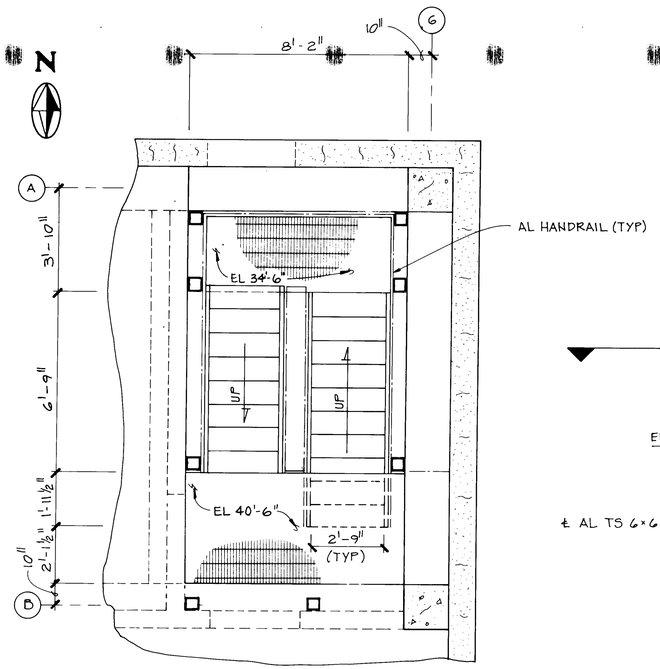

1 / S-12 SECTION

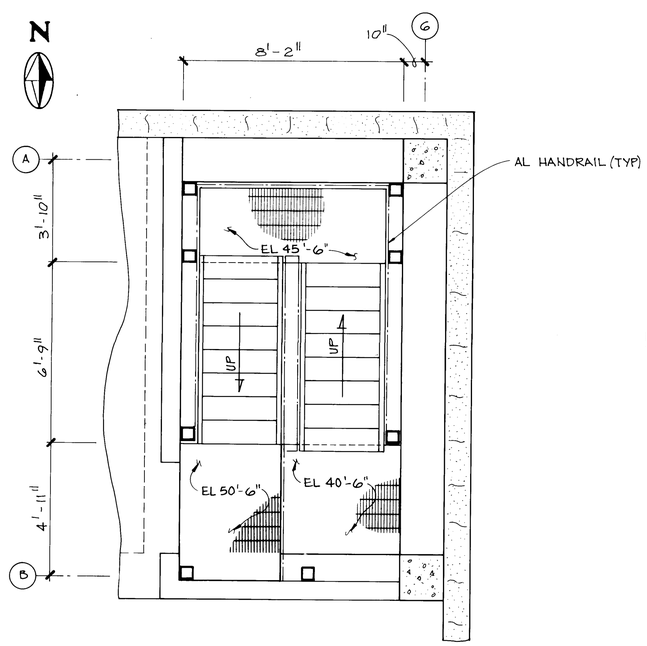

2 / S-12 SECTION

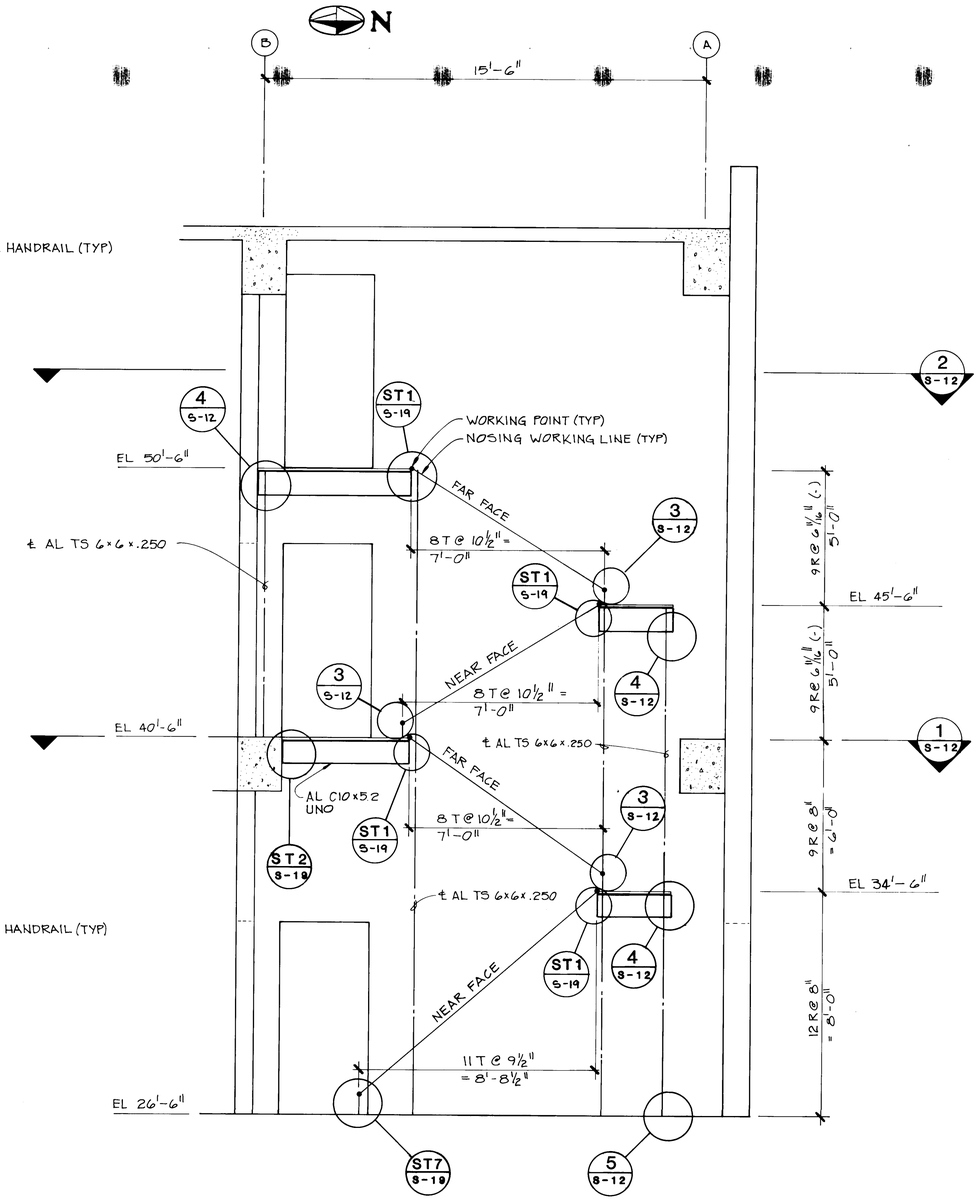

ELEVATION-STAIRS S1

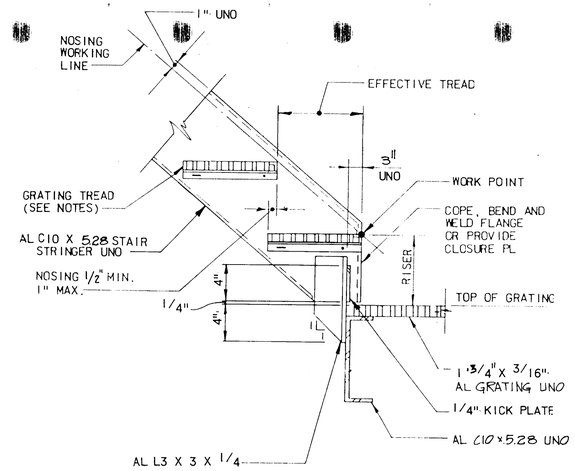

3 / S-12 DETAIL
NTS

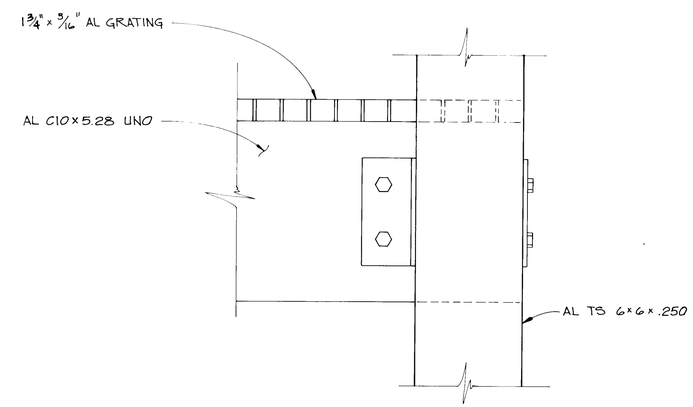

4 / S-12 DETAIL
NTS

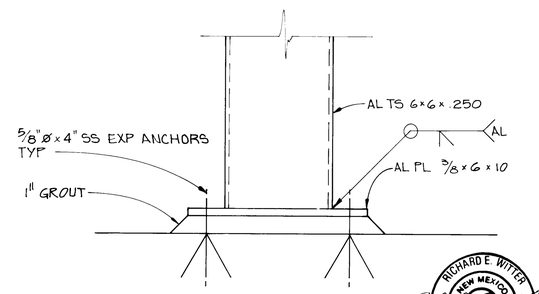

5 / S-12 DETAIL
NTS

NOTES:

1. USE 1 3/4" X 3/16" AL GRATING TREADS WITH ABRASIVE AL NOSING. CONNECTIONS MAY BE MODIFIED TO SUIT SPECIAL CONDITIONS. BOLTED CONNECTIONS MAY BE SUBSTITUTED FOR WELDED CONNECTIONS (SUBJECT TO ERECTORS AND ENGINEERS REVIEW).
2. SECURE ALL GRATING TO FRAMING MEMBERS.
3. FOR HANDRAIL DETAILS SEE SHEET S-20.

RICHARD E. WITTER NEW MEXICO 8022 REGISTERED PROFESSIONAL ENGINEER

RECORD DRAWING	
DATE: AUG. 1988	DRAFTED BY: MCA

THESE RECORD DRAWINGS HAVE BEEN PREPARED, IN PART, ON THE BASIS OF INFORMATION COMPILED AND FURNISHED BY OTHERS. THE ENGINEER WILL NOT BE RESPONSIBLE FOR ANY ERRORS OR OMISSIONS WHICH HAVE BEEN INCORPORATED INTO THIS DOCUMENT AS A RESULT.

1 2 3 4 5 6 7 8 9 10 11 12 13 14 15 16 17 18 19 20 21 22 23 24 25 26 27 28 29
2 6 3 6 9 4 2 4 8 8

NO.	DATE	REVISIONS	APPROVED
1	4-22-88	FINAL DRAWING	W. E. Witter

DESIGNED W TYNER
DRAWN DP Shepard
CHECKED W TYNER
APPROVED R.E. Witter
APPROVED
DATE MAY 31, 1985

MOLZEN-CORBIN
STANLEY CONSULTANTS
A JOINT VENTURE

3/8"=1'-0" 0 1 2 3 4
GRAPHIC SCALE

CITY OF ALBUQUERQUE, NEW MEXICO
SOLIDS HANDLING FACILITIES
PHASE II B-3, CONTRACT 1

INTERIM SLUDGE DEWATERING FACILITIES
DEWATERING BUILDING
PLATFORM AND STAIR DETAILS-SHEET 1

M-C NO.
S-12
24 OF 112
SC NO. 8496-S12

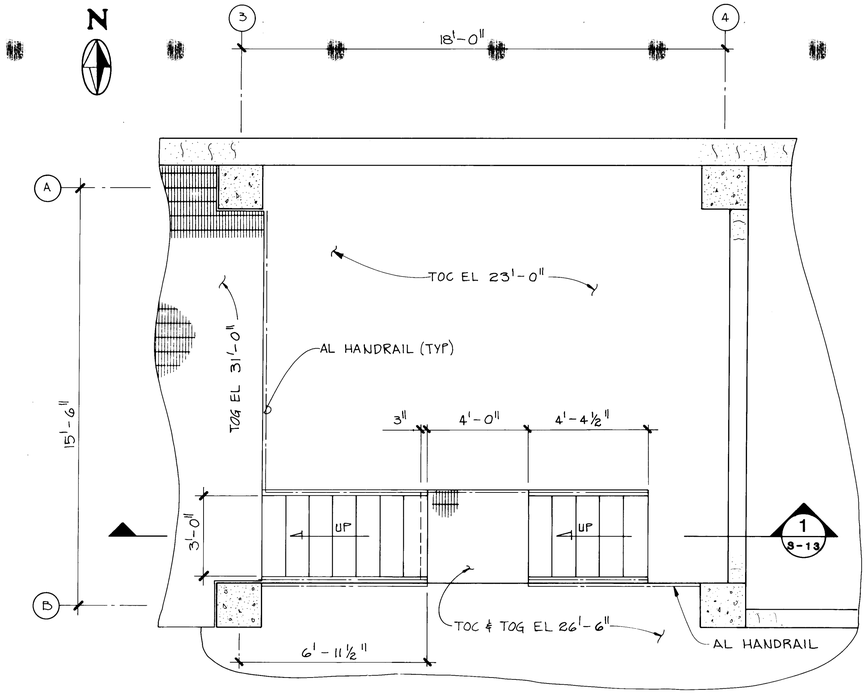

PLAN STAIR S2

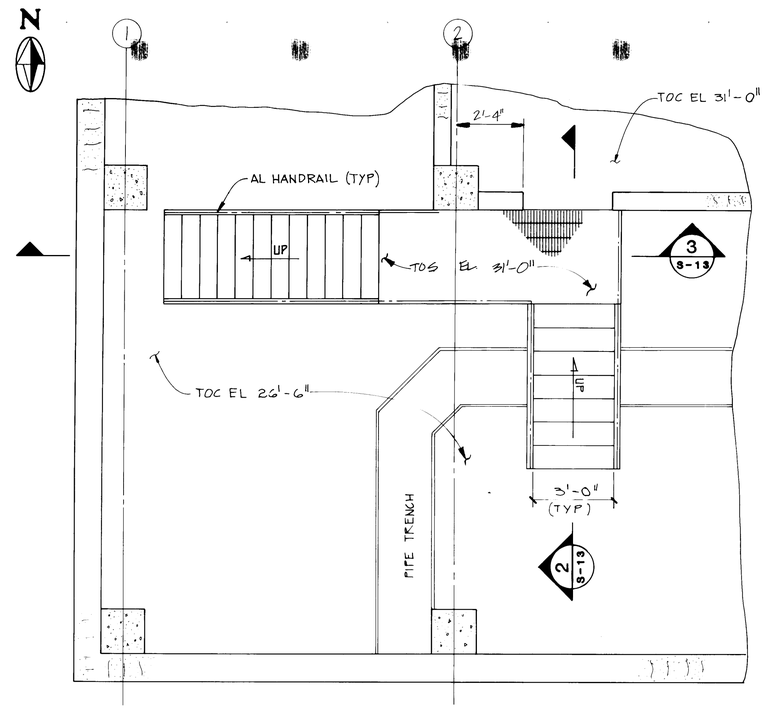

PLAN STAIR S3

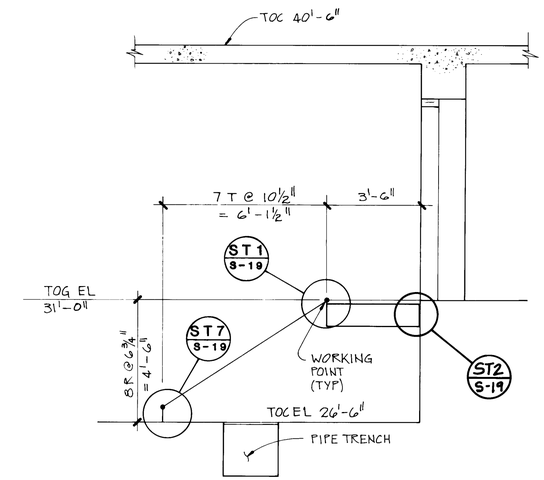

2 S-13 SECTION

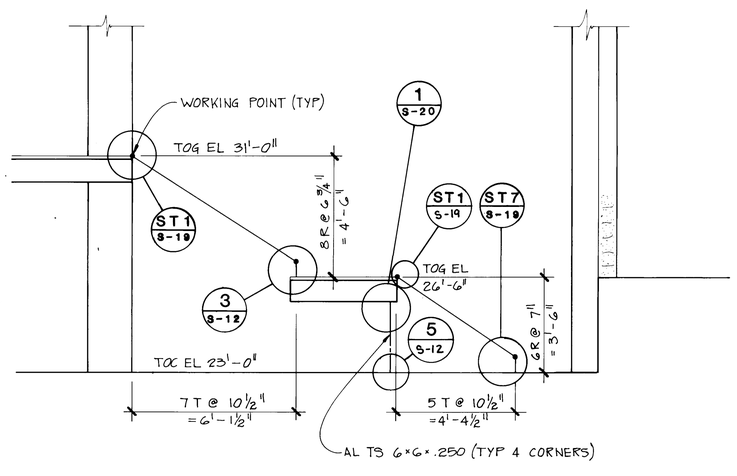

1 S-13 SECTION

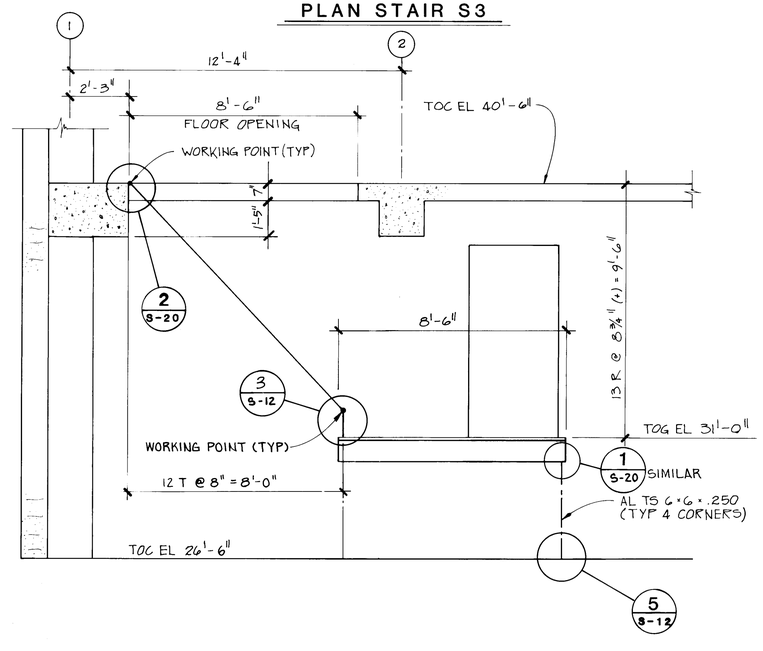

3 S-13 SECTION

NOTES:

1. USE 1 3/4" X 3/16" AL GRATING TREADS WITH ABRASIVE AL NOSING. CONNECTIONS MAY BE MODIFIED TO SUIT SPECIAL CONDITIONS. BOLTED CONNECTIONS MAY BE SUBSTITUTED FOR WELDED CONNECTIONS (SUBJECT TO ERECTORS AND ENGINEERS REVIEW).
2. SECURE ALL GRATING TO FRAMING MEMBERS.
3. FOR HANDRAIL DETAILS SEE SHEET S-20.

RECORD DRAWING	
DATE: AUG. 1988	DRAFTED BY: MCA

THESE RECORD DRAWINGS HAVE BEEN PREPARED, IN PART, ON THE BASIS OF INFORMATION COMPILED AND FURNISHED BY OTHERS. THE ENGINEER WILL NOT BE RESPONSIBLE FOR ANY ERRORS OR OMISSIONS WHICH HAVE BEEN INCORPORATED INTO THIS DOCUMENT AS A RESULT.

1 2 3 4 5 6 7 8 9 10 11 12 13 14 15 16 17 18 19 20 21 22 23 24 25 26 27 28 29
2 6 3 6 9 4 2 5 8 8

NO.	DATE	REVISIONS	APPROVED
1	4-22-88	FINAL DRAWING	

DESIGNED W TYNER
DRAWN DP Shepard
CHECKED W TYNER
APPROVED
APPROVED
DATE MAY 31, 1988

MOLZEN-CORBIN
STANLEY CONSULTANTS
A JOINT VENTURE

3/8"=1'-0"
GRAPHIC SCALE

CITY OF ALBUQUERQUE, NEW MEXICO
SOLIDS HANDLING FACILITIES
PHASE II B-3, CONTRACT 1

INTERIM SLUDGE DEWATERING FACILITIES
DEWATERING BUILDING
PLATFORM AND STAIR DETAILS-SHEET 2

M-C NO.
S-13
25 OF 112
SC NO. 8486-S13

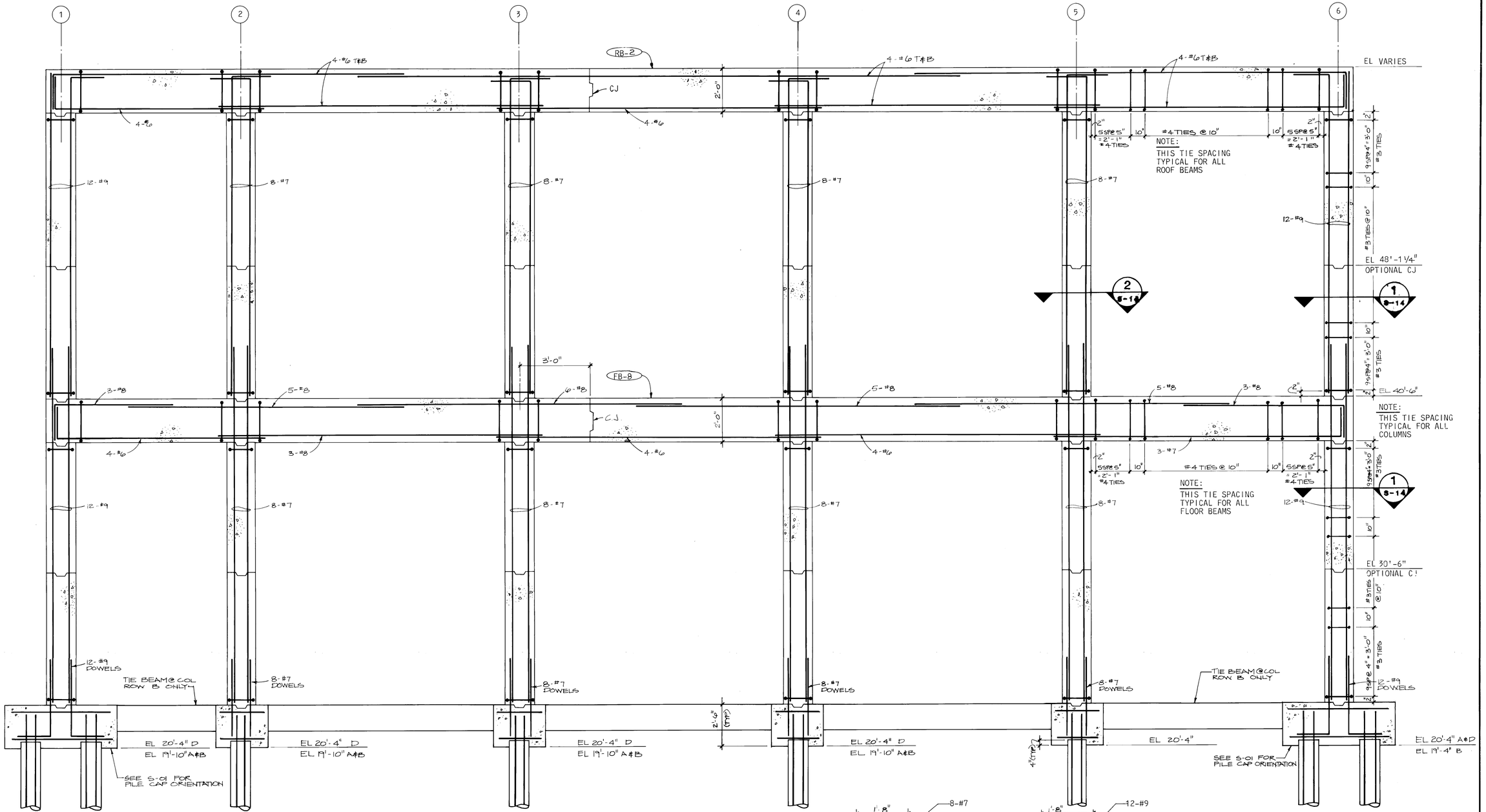

FRAME SECTION FB-8, RB-2

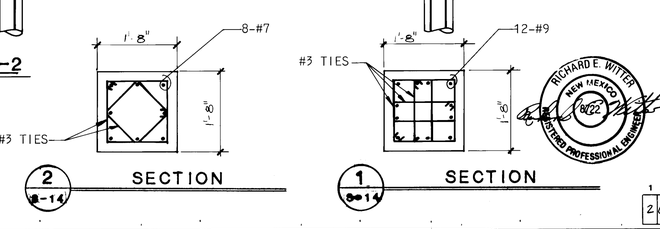

RECORD DRAWING	
DATE: AUG. 1988	DRAFTED BY: MCA

THESE RECORD DRAWINGS HAVE BEEN PREPARED, IN PART, ON THE BASIS OF INFORMATION COMPILED AND FURNISHED BY OTHERS. THE ENGINEER WILL NOT BE RESPONSIBLE FOR ANY ERRORS OR OMISSIONS WHICH HAVE BEEN INCORPORATED INTO THIS DOCUMENT AS A RESULT.

RICHARD E. WITTER NEW MEXICO 8122 REGISTERED PROFESSIONAL ENGINEER

NOTES:
SEE S-01 FOR PILE CAP REINFORCING.

NO.	DATE	REVISIONS	APPROVED
1	4-22-88	FINAL DRAWING	R.E. Witter

DESIGNED W TYNER
DRAWN DWRIGHT
CHECKED W TYNER
APPROVED R.E. Witter
APPROVED
DATE MAY 31, 1988

MOLZEN-CORBIN
STANLEY CONSULTANTS
A JOINT VENTURE

NO SCALE
GRAPHIC SCALE

CITY OF ALBUQUERQUE, NEW MEXICO
SOLIDS HANDLING FACILITIES
PHASE II B-3, CONTRACT 1

INTERIM SLUDGE DEWATERING FACILITIES
DEWATERING BUILDING
FRAME SECTION - BEAMS RB-2 & FB-8

M-C NO. S-14
26 of 112
SC NO. 8496-S14

© STANLEY CONSULTANTS

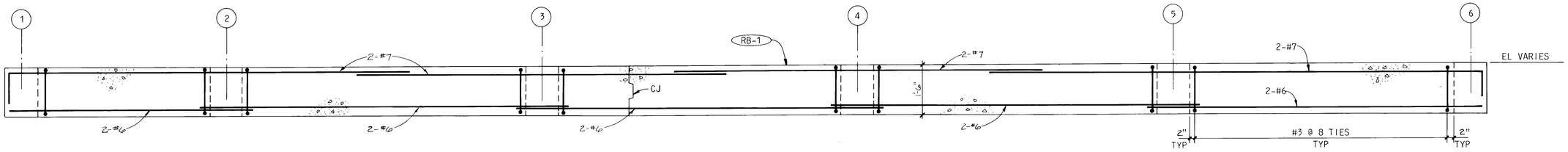

BEAM RB-1

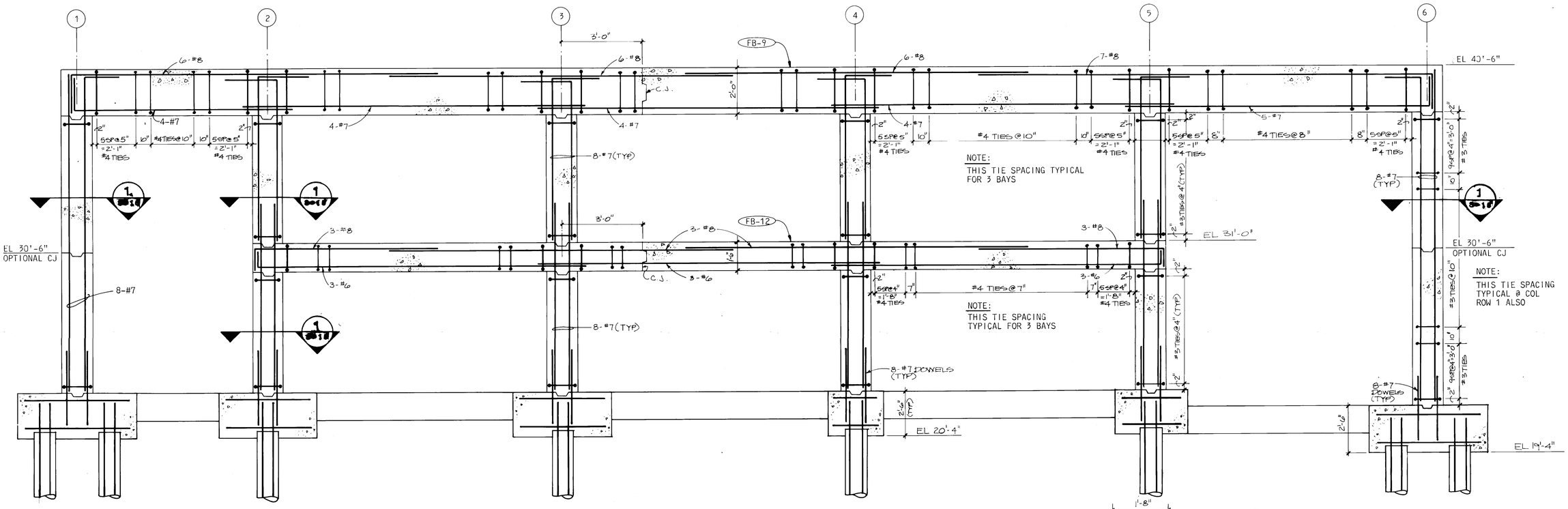

FRAME SECTION FB-9, FB-12, RB-1

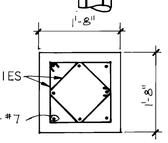

1 / S-1d SECTION

NOTES:
SEE S-01 FOR PILE CAP REINFORCING

RICHARD E. WITTER
NEW MEXICO
8722
REGISTERED PROFESSIONAL ENGINEER

RECORD DRAWING	
DATE: AUG. 1988	DRAFTED BY: MCA

THESE RECORD DRAWINGS HAVE BEEN PREPARED, IN PART, ON THE BASIS OF INFORMATION COMPILED AND FURNISHED BY OTHERS. THE ENGINEER WILL NOT BE RESPONSIBLE FOR ANY ERRORS OR OMISSIONS WHICH HAVE BEEN INCORPORATED INTO THIS DOCUMENT AS A RESULT.

1 2 3 4 5 6 7 8 9 10 11 12 13 14 15 16 17 18 19 20 21 22 23 24 25 26 27 28 29
2 6 3 6 9 4 2 7 8 8

NO.	DATE	REVISIONS	APPROVED
1	4-22-88	FINAL DRAWING	

DESIGNED W. TYNER
DRAWN DWRIGHT
CHECKED W. TYNER
APPROVED R.E. Witter
APPROVED
DATE MAY 31, 1985

MOLZEN-CORBIN
STANLEY CONSULTANTS
A JOINT VENTURE

NO SCALE
GRAPHIC SCALE

CITY OF ALBUQUERQUE, NEW MEXICO
SOLIDS HANDLING FACILITIES
PHASE II B-3, CONTRACT 1

INTERIM SLUDGE DEWATERING FACILITIES
DEWATERING BUILDING
FRAME SECTION - BEAMS RB-1 & FB-9,12

M-C NO.
S-15
27 of 112
SC NO. 8496-S15

© STANLEY CONSULTANTS

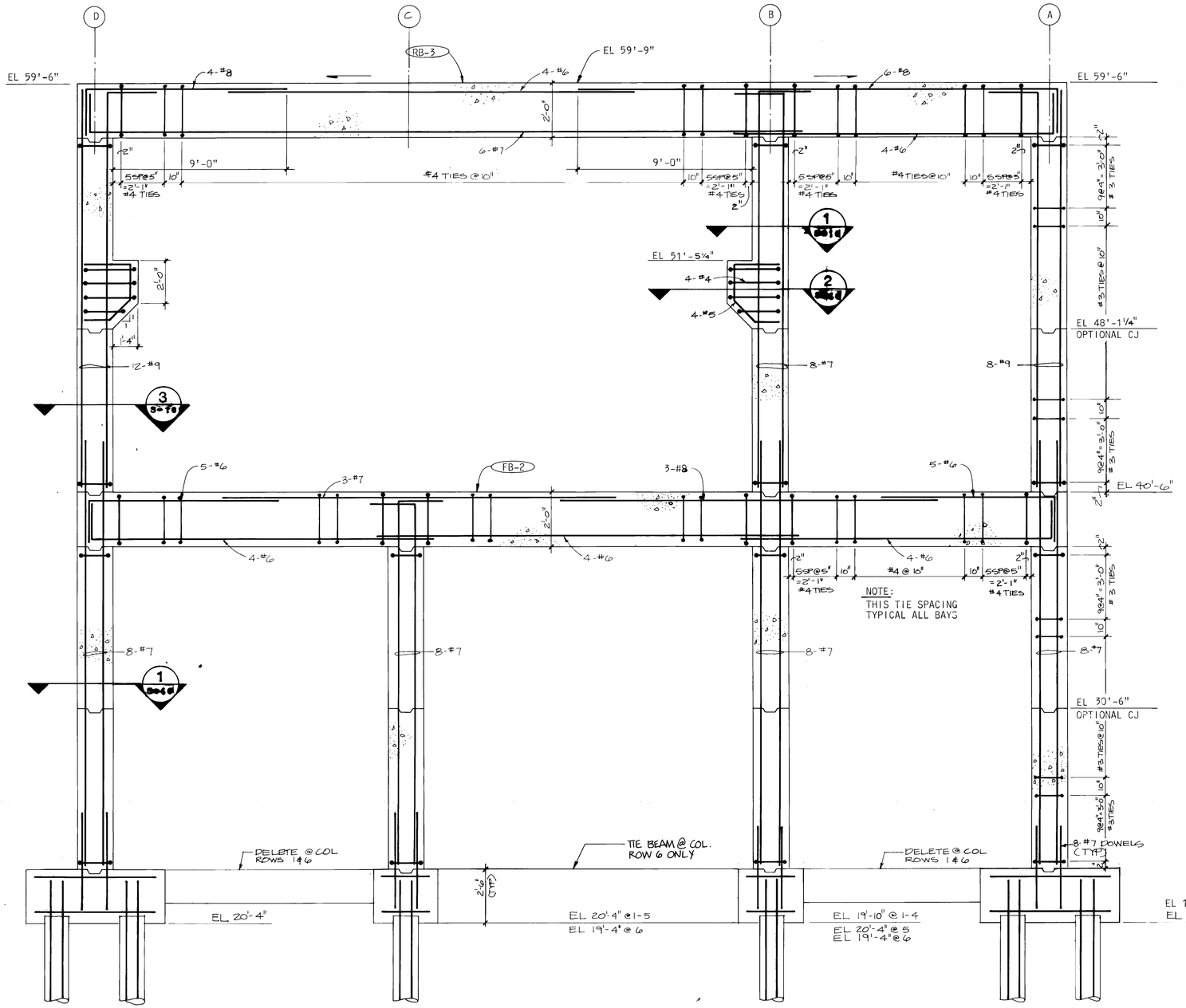

FRAME SECTION RB-3, FB-2

FLOOR BEAM SCHEDULE

BEAM NO	SIZE W	SIZE D	TOP OF BEAM EL	TYPE	REINFORCING B(BOT)	REINFORCING T(TOP)	REINFORCING TIES	REMARKS
FB-1	16"	24"	40'-6"	B	2-#8	2-#9	#3@10	
FB-2	20"	24"	40'-6"	A OR B	4-#6	VARIES	#4	SEE FRAME SECTION
FB-3	16"	24"	40'-6"	B	2-#9	2-#6	#3@10	
FB-4	16"	24"	40'-6"	B	2-#9	2-#6	#3@10	
FB-5	16"	24"	40'-6"	A	2-#9	2-#6	#3@10	
FB-6	16"	24"	40'-6"	B	3-#6	3-#6	#3@10	
FB-7	16"	24"	40'-6"	A	3-#6	3-#6	#3@10	
FB-8	20"	24"	40'-6"	A OR B	VARIES	VARIES	#4	SEE FRAME SECTION
FB-9	20"	24"	40'-6"	B	VARIES	VARIES	#4	SEE FRAME SECTION
FB-10	12"	18"	31'-0"	B	2-#8	2-#6	#3@9	
FB-11	12"	18"	31'-0"	A	3-#6	4-#6	#3@8	
FB-12	20"	18"	31'-0"	A	3-#6	3-#8	#4	SEE FRAME SECTION
FB-13	12"	18"	31'-0"	B	2-#7	2-#6	#3@9	

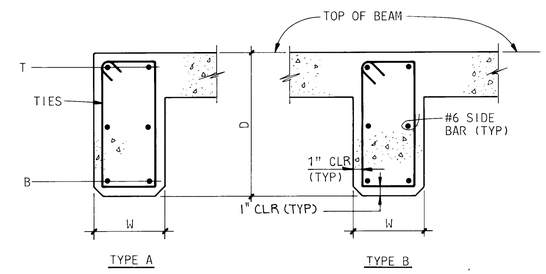

TYPICAL BEAM DETAILS

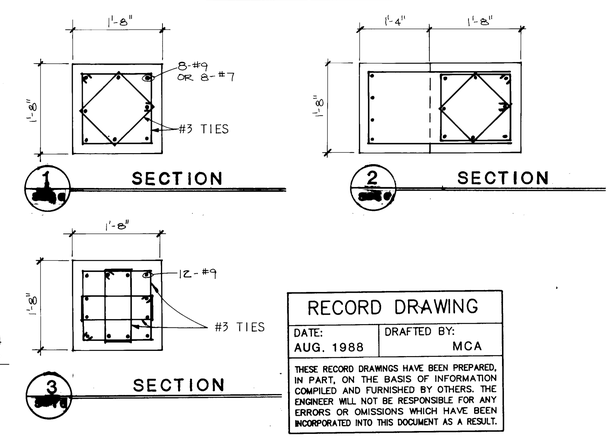

RECORD DRAWING	
DATE: AUG. 1988	DRAFTED BY: MCA

THESE RECORD DRAWINGS HAVE BEEN PREPARED, IN PART, ON THE BASIS OF INFORMATION COMPILED AND FURNISHED BY OTHERS. THE ENGINEER WILL NOT BE RESPONSIBLE FOR ANY ERRORS OR OMISSIONS WHICH HAVE BEEN INCORPORATED INTO THIS DOCUMENT AS A RESULT.

NOTES:

SEE S-01 FOR PILE CAP REINFORCING.

SEE FOUNDATION PLAN S-01 FOR PILE CAP ELEVATIONS.

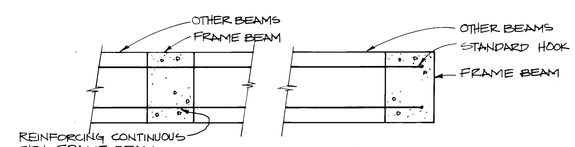

TYPICAL BEAM DETAILS

RICHARD E. WITTER NEW MEXICO REGISTERED PROFESSIONAL ENGINEER

NO.	DATE	REVISIONS	APPROVED
1	4-22-88	FINAL DRAWING	R.E. Witter

DESIGNED W. TYNER
DRAWN DWRIGHT
CHECKED W. TYNER
APPROVED R.E. Witter
APPROVED
DATE MAY 31, 1988

MOLZEN-CORBIN
STANLEY CONSULTANTS
A JOINT VENTURE

NO SCALE

GRAPHIC SCALE

CITY OF ALBUQUERQUE, NEW MEXICO
SOLIDS HANDLING FACILITIES
PHASE II B-3, CONTRACT 1

INTERIM SLUDGE DEWATERING FACILITIES
DEWATERING BUILDING
FRAME SECTION AND BEAM DETAILS

M-C NO. S-16 28 OF 112
SC NO. 8496-S16

1 2 3 4 5 6 7 8 9 10 11 12 13 14 15 16 17 18 19 20 21 22 23 24 25 26 27 28 29
2 6 3 6 9 4 2 8 8 8

© STANLEY CONSULTANTS

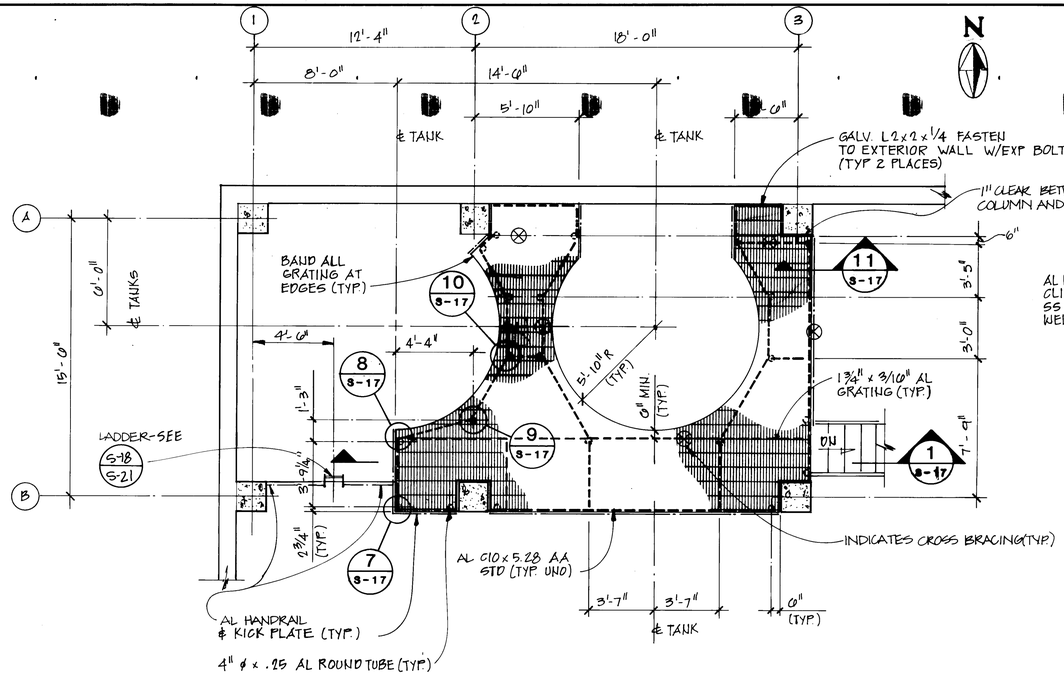

POLYMER TANK PLATFORM PLAN

1/4"=1'-0"

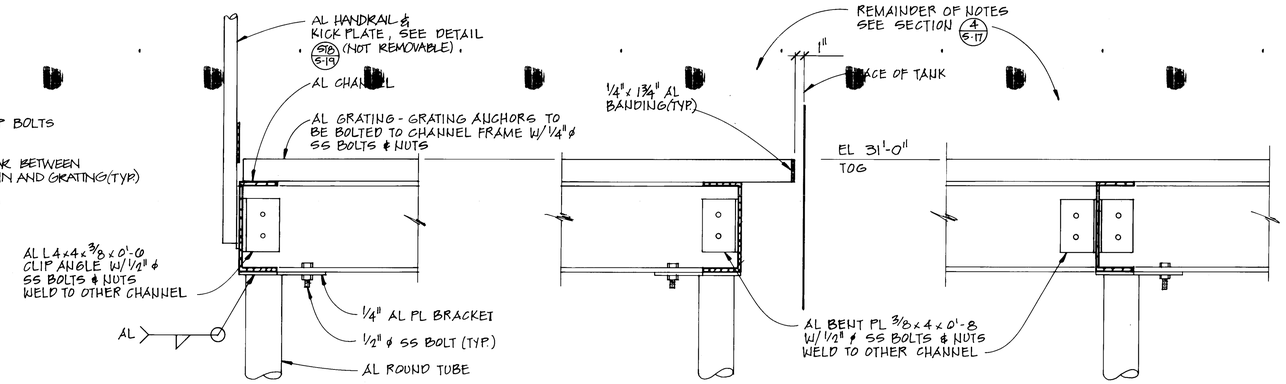

4 S-17 SECTION 1-1/2"=1'-0"

5 S-17 SECTION 1-1/2"=1'-0"

6 S-17 SECTION 1-1/2"=1'-0"

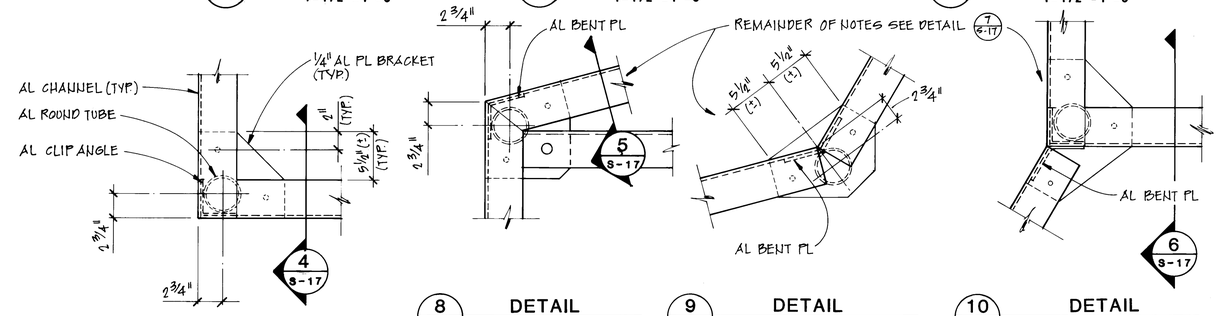

8 S-17 DETAIL 1-1/2"=1'-0"

9 S-17 DETAIL 1-1/2"=1'-0"

10 S-17 DETAIL 1-1/2"=1'-0"

7 S-17 DETAIL 1-1/2"=1'-0"

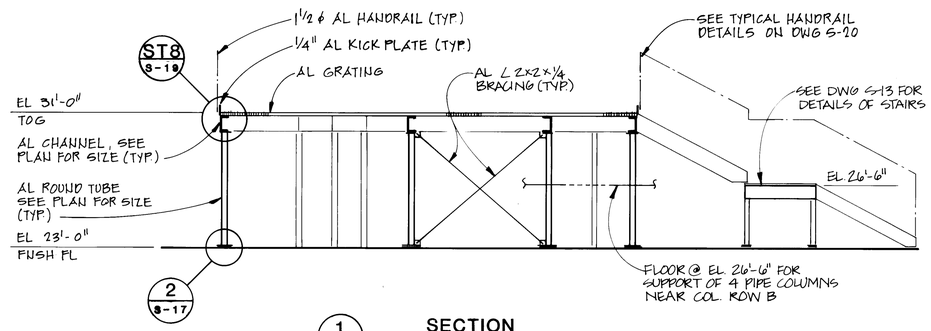

1 S-17 SECTION 1/4"=1'-0"

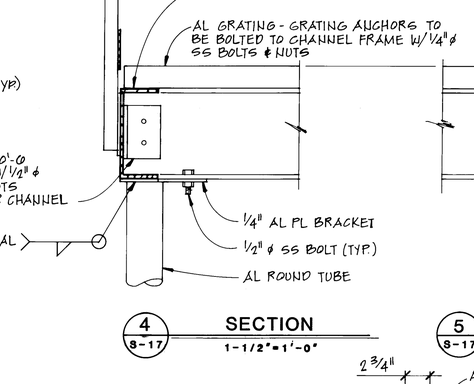

11 S-17 SECTION 1-1/2"=1'-0"

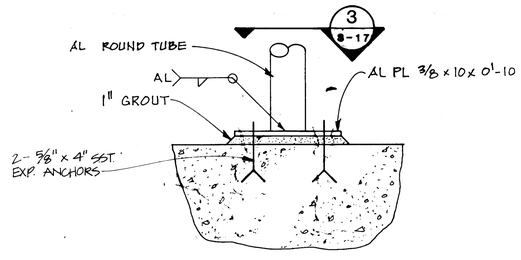

2 S-17 DETAIL 1-1/2"=1'-0"

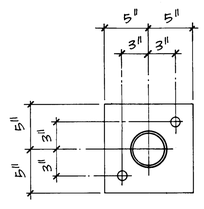

3 S-17 SECTION 1-1/2"=1'-0"

RECORD DRAWING

DATE:	DRAFTED BY:
AUG. 1988	MCA

THESE RECORD DRAWINGS HAVE BEEN PREPARED, IN PART, ON THE BASIS OF INFORMATION COMPILED AND FURNISHED BY OTHERS. THE ENGINEER WILL NOT BE RESPONSIBLE FOR ANY ERRORS OR OMISSIONS WHICH HAVE BEEN INCORPORATED INTO THIS DOCUMENT AS A RESULT.

RICHARD E. WITTER NEW MEXICO 8762 REGISTERED PROFESSIONAL ENGINEER

1 2 3 4 5 6 7 8 9 10 11 12 13 14 15 16 17 18 19 20 21 22 23 24 25 26 27 28 29

26 3 6 9 4 2 9 8 8

NO.	DATE	REVISIONS	APPROVED
1	4-22-88	FINAL DRAWING	R.E.W.

DESIGNED W TYNER
DRAWN T HUMISTON
CHECKED W TYNER
APPROVED R.E.W.
APPROVED
DATE MAY 31, 1985

MOLZEN-CORBIN
STANLEY CONSULTANTS
A JOINT VENTURE

1-1/2"=1'-0" 0 1' 2'
1/4"=1'-0" 0 4' 6' 8'
GRAPHIC SCALE

CITY OF ALBUQUERQUE, NEW MEXICO
SOLIDS HANDLING FACILITIES
PHASE II B-3, CONTRACT 1

INTERIM SLUDGE DEWATERING FACILITIES
DEWATERING BUILDING
POLYMER TANK PLATFORM PLAN, SECTION, AND DETAILS

M-C NO.
S-17
29 OF 112
SC NO. 8496-517

STRUCTURAL

STEEL NOTES:

1. STRUCTURAL STEEL SHALL BE ASTM A-36 AND ALUMINUM ALLOY 6061-T6.
2. DIMENSIONS: TO CENTERLINES OF COLUMNS AND BEAMS, BACKS OF CHANNELS AND ANGLES AND TOP SURFACES OF BEAMS AND TUBES, UNLESS OTHERWISE SHOWN.
3. ELEVATIONS: REFER TO TOP SURFACE OF FLANGE OF MEMBER, UNLESS OTHERWISE SHOWN.
4. FRAMING MEMBERS NOTED BY DEPTH AND WEIGHT SHALL CONFORM TO THE AISC SPECIFICATION. FRAMING MEMBERS NOTED BY DEPTH ONLY ARE FULLY SIZED ON ANOTHER PLAN OR ELEVATION DRAWING.
5. UNLESS NUMBER OF BOLTS ARE SPECIFICALLY CALLED OUT ON PLANS, DETAILS OF BOLTED CONNECTIONS ARE NOT INTENDED TO SHOW EXACT NUMBER OF BOLTS, BUT ARE SYMBOLIC ONLY. DESIGN CONNECTION FOR NUMBER OF BOLTS REQUIRED BY SPECIFICATION. USE MINIMUM OF 2 BOLTS IN ANY CONNECTION.
6. DETAILING OF MEMBERS AND CONNECTIONS ARE NOT INTENDED TO BE COMPLETE. CONTRACTOR SHALL COMPLETE DETAILS ON SHOP DRAWINGS SUBMITTED FOR OWNER REVIEW.
7. CONTRACTOR SHALL PROVIDE AS MUCH WELDING AS PRACTICAL IN THE SHOP. CONTRACTOR'S SHOP DRAWINGS SHALL DISTINGUISH BETWEEN FIELD AND SHOP WELDING AND DETAILS SHALL BE PROVIDED TO SHOW FIELD WELDING.

LAP SPLICES AND EMBEDMENT LENGTHS - INCHES (CLASS B)				
BAR SIZES NO	LAP SPLICE		EMBEDMENT	
	TOP BARS *	OTHER BARS	TOP BARS *	OTHER BARS
3	16	12	13	12
4	22	16	17	12
5	27	20	21	15
6	33	24	25	18
7	41	30	32	23
8	55	39	42	30
9	69	49	53	38
10	88	63	67	48
11	108	77	83	59

* TOP BARS ARE DEFINED AS HORIZONTAL BARS WITH MORE THAN 12 INCHES OF CONCRETE CAST IN THE MEMBER BELOW THE REINFORCEMENT.

STANDARD REBAR HOOKS	
BAR SIZES	A
#3	6
#4	8
#5	10
#6	1'-0"
#7	1'-2"
#8	1'-4"
#9	1'-7"
#10	1'-10"
#11	2'-0"

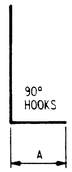

CONCRETE AND REINFORCING STEEL NOTES:

1. CONCRETE STRENGTH AT 28 DAYS:
   FILL CONCRETE _____ 2,500 PSI
   ALL OTHER CONCRETE _____ 4,000 PSI
2. EXPOSED CONCRETE CORNER CHAMFER: 3/4" UNLESS OTHERWISE SHOWN.
3. KEYWAY DIMENSIONS: DEPTH 1 1/2" WIDTH 1/3 THAT OF MEMBER UNLESS OTHERWISE SHOWN.
4. ALL CONSTRUCTION JOINTS SHALL HAVE KEYWAYS UNLESS SHOWN OTHERWISE.
5. CONSTRUCTION JOINTS AS SHOWN MAY BE VARIED TO SUIT PLACING SEQUENCE PROVIDED THE LOCATION OR DELETION OF CONSTRUCTION JOINTS IS APPROVED BY OWNER.
6. CONCRETE SHALL NOT BE LOADED UNTIL IT HAS CURED SUFFICIENTLY AND HAS BEEN PROPERLY SUPPORTED TO WITHSTAND THE LOAD TO BE IMPOSED.
7. MAIN REINFORCING CONCRETE COVER UNLESS OTHERWISE SHOWN: 2" WITH FOLLOWING EXCEPTION: 3" WHEN DEPOSITED AGAINST EARTH: 3/4" FOR WALLS AND SLABS NOT EXPOSED TO EARTH, WEATHER, OR CONTINUOUSLY MOIST ATMOSPHERE.
8. MINIMUM BAR SPLICE: CLASS B AS SHOWN IN TABLE, UNLESS OTHERWISE SHOWN.
9. REINFORCING CONTINUOUS AROUND ALL CORNERS UNLESS OTHERWISE SHOWN.
10. WELDING OF REINFORCING BARS AT CROSSING POINTS NOT PERMITTED.
11. REINFORCING STEEL SHALL BE SHIFTED TO CLEAR EMBEDDED ITEMS: OBTAIN OWNERS APPROVAL.
12. REINFORCING STEEL: ASTM A615, GRADE 60.
13. REINFORCING BARS SHALL BE CONTINUOUS THRU CONSTRUCTION JOINTS, AND NON-CONTINUOUS THRU EXPANSION JOINTS.
14. TOP REINFORCING IN SLABS, BEAMS AND GRADE BEAMS MAY BE SPLICED IN MIDSPAN BETWEEN SUPPORTS. BOTTOM REINFORCING MAY BE SPLICED OVER OR NEAR SUPPORTS.
15. EMBEDMENT LENGTHS SHALL BE IN ACCORDANCE WITH THE TABLE SHOWN UNLESS OTHERWISE INDICATED.
16. THE TABLE SHOWN ON THIS SHEET SHALL BE USED IN DETERMINING LAP SPLICE LENGTHS WHERE LENGTHS ARE NOT OTHERWISE INDICATED. SPLICE LENGTHS SHALL BE BASED ON THE SMALLER BAR BEING LAPPED.

GENERAL

LOADING

1. ROOF LOADS:
   LIVE LOAD : 20 PSF
   MECHANICAL LOAD: 15 PSF.
2. CRANE LOAD (CENTRIFUGE ROOM): 10 TON.
3. FLOOR LIVE LOAD 150 PSF OR EQUIPMENT WEIGHTS.
4. STAIRS: LIVE LOAD 100 PSF
5. WIND LOAD 70 MPH, EXPOSURE C.
6. EARTHQUAKE LOAD SEISMIC ZONE 2.
7. POLYMER STORAGE ROOM: LIVE LOAD 250 PSF
8. MEZZANINE CORED SLABS: LIVE LOAD 100 PSF
9. HOIST LOAD (POLYMER STORAGE ROOM): 1 TON

RECORD DRAWING

DATE: AUG. 1988	DRAFTED BY: MCA

THESE RECORD DRAWINGS HAVE BEEN PREPARED, IN PART, ON THE BASIS OF INFORMATION COMPILED AND FURNISHED BY OTHERS. THE ENGINEER WILL NOT BE RESPONSIBLE FOR ANY ERRORS OR OMISSIONS WHICH HAVE BEEN INCORPORATED INTO THIS DOCUMENT AS A RESULT.

RICHARD E. WITT NEW MEXICO 8722 REGISTERED PROFESSIONAL ENGINEER

1 2 3 4 5 6 7 8 9 10 11 12 13 14 15 16 17 18 19 20 21 22 23 24 25 26 27 28 29
2 6 3 6 9 4 3 0 8 8

NO.	DATE	REVISIONS	APPROVED
1	4-22-88	FINAL DRAWING	

DESIGNED W TYNER
DRAWN DWRIGHT
CHECKED W TYNER
APPROVED
APPROVED
DATE MAY 31, 1985

MOLZEN-CORBIN
STANLEY CONSULTANTS
A JOINT VENTURE

NO SCALE
GRAPHIC SCALE

CITY OF ALBUQUERQUE, NEW MEXICO
SOLIDS HANDLING FACILITIES
PHASE II B-3, CONTRACT 1

INTERIM SLUDGE DEWATERING FACILITIES
GENERAL NOTES

M-C NO. S-18
30 OF 112
SC NO. 8496-S18

© STANLEY CONSULTANTS

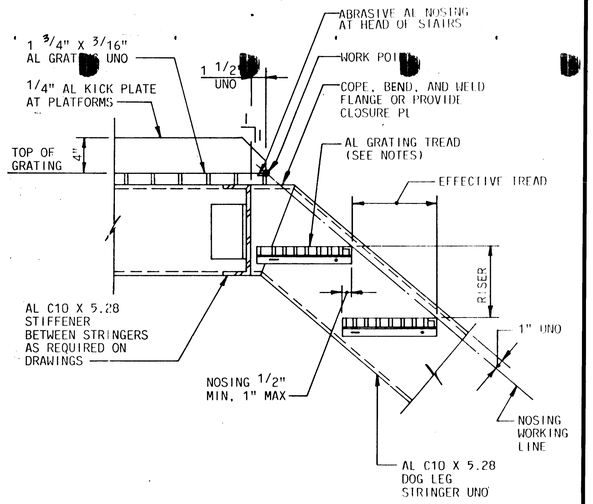

ST1

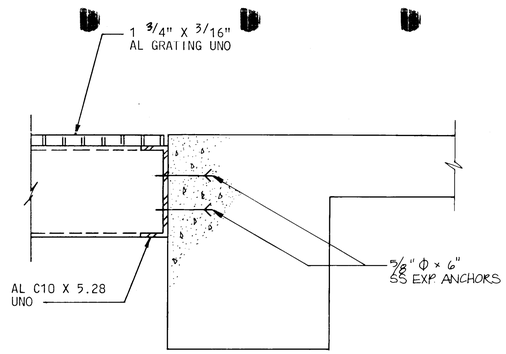

ST2

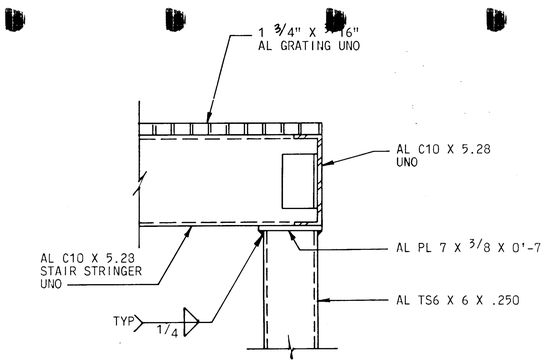

ST3

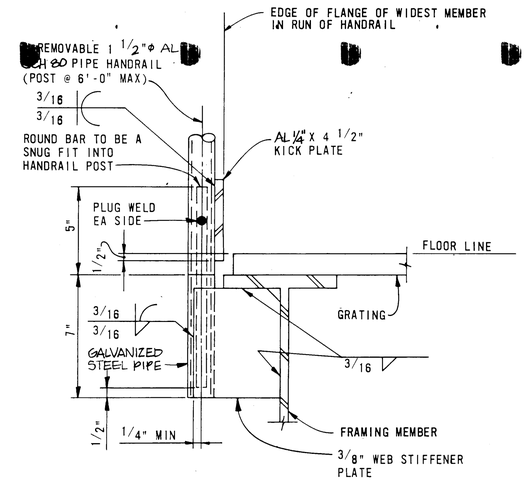

ST4

TOP OF STAIR SUPPORT DETAILS

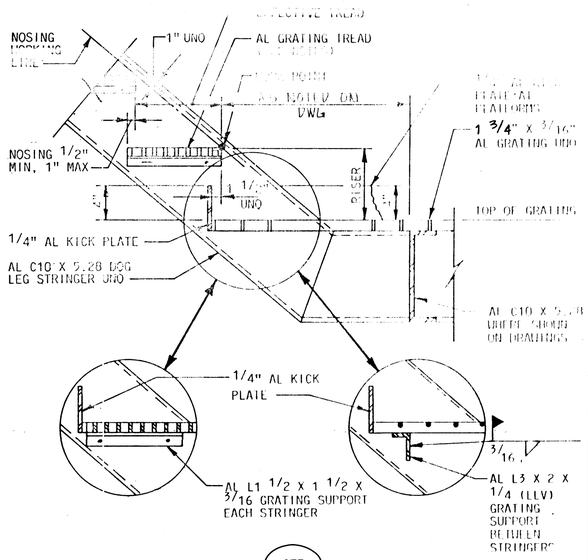

ST5

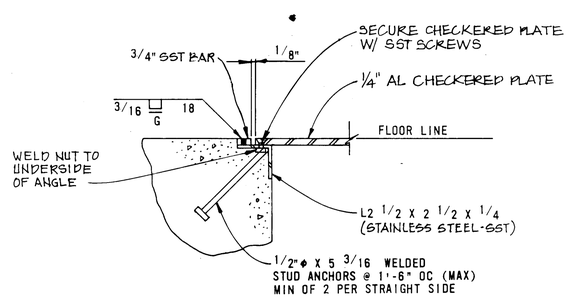

ST6

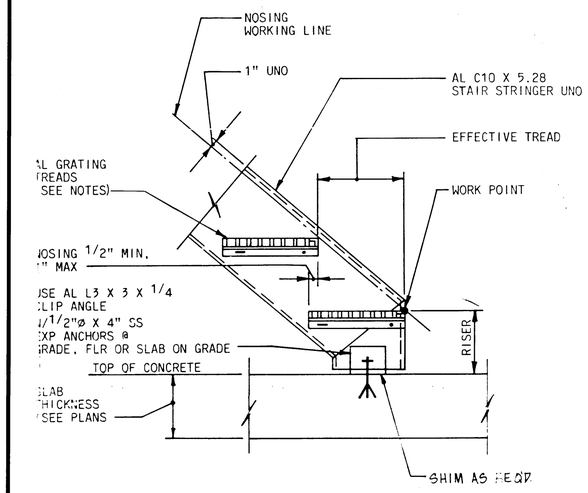

ST7

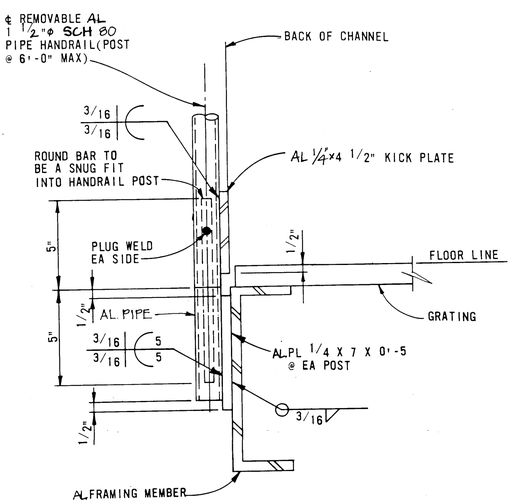

ST8

NOTES:

1. USE 1 3/4" X 3/16" AL GRATING TREADS WITH ABRASIVE AL NOSING.

   CONNECTIONS MAY BE MODIFIED TO SUIT SPECIAL CONDITIONS. BOLTED CONNECTIONS MAY BE SUBSTITUTED FOR WELDED CONNECTIONS (SUBJECT TO ERECTORS AND ENGINEERS REVIEW).

2. SECURE ALL GRATING TO FRAMING MEMBERS.

RECORD DRAWING	
DATE: AUG. 1988	DRAFTED BY: MCA

THESE RECORD DRAWINGS HAVE BEEN PREPARED, IN PART, ON THE BASIS OF INFORMATION COMPILED AND FURNISHED BY OTHERS. THE ENGINEER WILL NOT BE RESPONSIBLE FOR ANY ERRORS OR OMISSIONS WHICH HAVE BEEN INCORPORATED INTO THIS DOCUMENT AS A RESULT.

RICHARD E. WITTER NEW MEXICO 8722 REGISTERED PROFESSIONAL ENGINEER

1 2 3 4 5 6 7 8 9 10 11 12 13 14 15 16 17 18 19 20 21 22 23 24 25 26 27 28 29
2 6 3 6 9 4 3 1 8 8

NO.	DATE	REVISIONS	APPROVED
1	4-22-88	FINAL DRAWING	R.E. Witter

DESIGNED W TYNER
DRAWN DWRIGHT
CHECKED W TYNER
APPROVED R.E. Witter
APPROVED
DATE MAY 31, 1905

MOLZEN-CORBIN
STANLEY CONSULTANTS
A JOINT VENTURE

NO SCALE
GRAPHIC SCALE

CITY OF ALBUQUERQUE, NEW MEXICO
SOLIDS HANDLING FACILITIES
PHASE II B-3, CONTRACT 1

INTERIM SLUDGE DEWATERING FACILITIES
STANDARD STAIR DETAILS

M-C NO. S-19
31 OF 112
SC NO. 8496-S19

© STANLEY CONSULTANTS

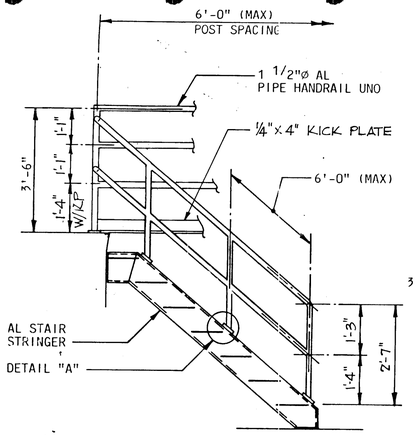

SECTION-ACCESS TO FLOOR OR PLATFORM

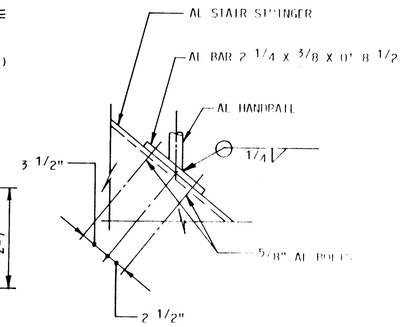

DETAIL "A"

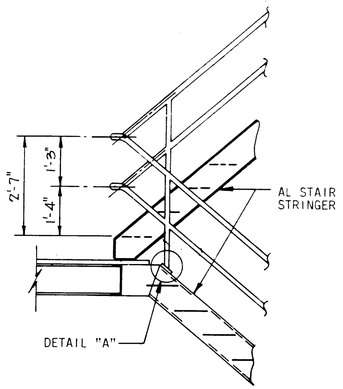

SECTION AT CONTINUOUS STAIRS

TYPICAL HANDRAIL DETAILS

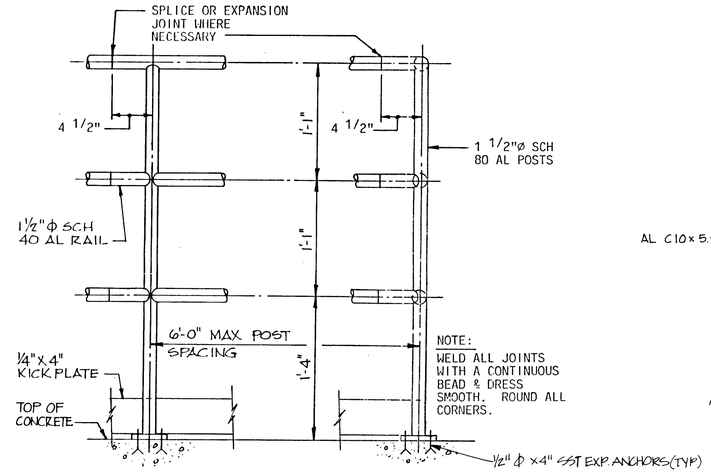

INTERMEDIATE POST

CORNER POST

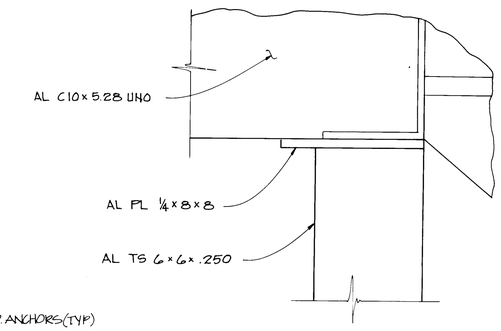

HANDRAIL POST DETAILS

1 / S-13 DETAIL

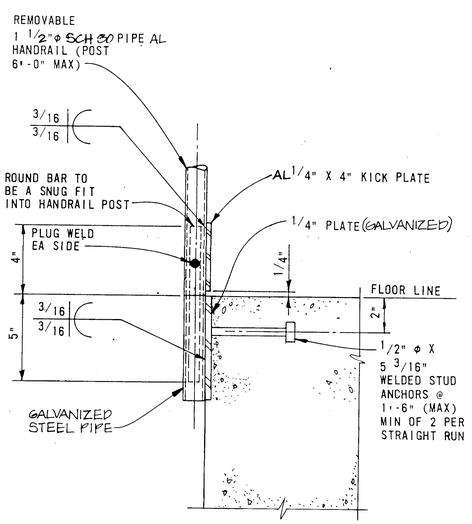

HANDRAIL SIDE MOUNT DETAIL

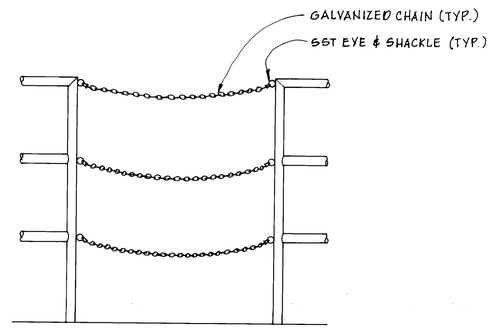

CHAIN CLOSURE

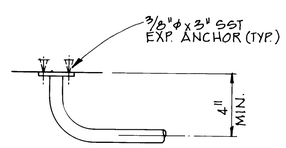

WALL MOUNT HANDRAIL

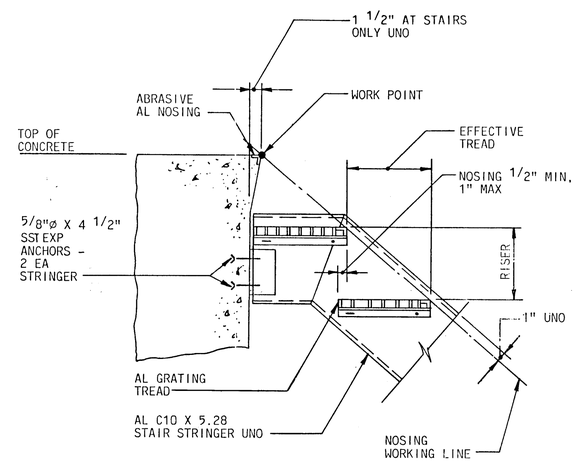

2 / S-13 DETAIL

RECORD DRAWING

DATE:	DRAFTED BY:
AUG. 1988	MCA

THESE RECORD DRAWINGS HAVE BEEN PREPARED, IN PART, ON THE BASIS OF INFORMATION COMPILED AND FURNISHED BY OTHERS. THE ENGINEER WILL NOT BE RESPONSIBLE FOR ANY ERRORS OR OMISSIONS WHICH HAVE BEEN INCORPORATED INTO THIS DOCUMENT AS A RESULT.

RICHARD E. WITTER NEW MEXICO 8722 REGISTERED PROFESSIONAL ENGINEER

1 2 3 4 5 6 7 8 9 10 11 12 13 14 15 16 17 18 19 20 21 22 23 24 25 26 27 28 29
2 6 3 6 9 4 3 2 8 8

NO.	DATE	REVISIONS	APPROVED
1	4-22-88	FINAL DRAWING	R.E. Witter

DESIGNED W. TYNER
DRAWN DWRIGHT
CHECKED W. TYNER
APPROVED R.E. Witter
APPROVED
DATE MAY 31, 1985

MOLZEN-CORBIN
STANLEY CONSULTANTS
A JOINT VENTURE

NO SCALE.
GRAPHIC SCALE

CITY OF ALBUQUERQUE, NEW MEXICO
SOLIDS HANDLING FACILITIES
PHASE II B-B, CONTRACT 1

INTERIM SLUDGE DEWATERING FACILITIES
STANDARD HANDRAIL DETAILS

M-C NO. S-20
32 of 112
SC NO. 8496-S20

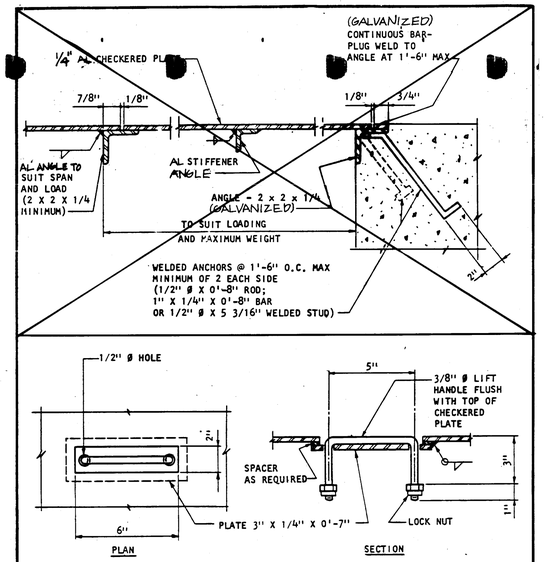

LIFT HANDLE DETAILS

PROVIDE WHERE SHOWN OR SPECIFIED

REVISIONS	DWN.	APP.	APP.	DATE

STANLEY CONSULTANTS
INTERNATIONAL CONSULTANTS IN ENGINEERING ARCHITECTURE PLANNING AND MANAGEMENT

DESIGNED / DRAWN DC DRAKE / CHECKED OP / APPROVED / APPROVED / DATE MAY 10, 1982

STRUCTURAL STANDARD — CHECKERED PLATE LIFT HANDLE — SCALE NONE — NO. S-7 — REV. 0

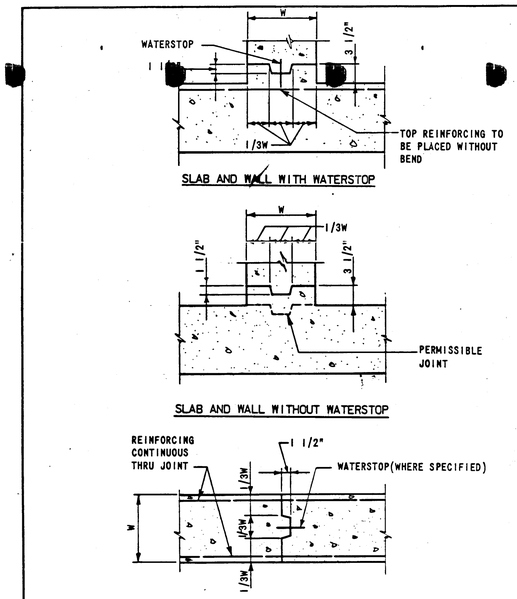

REVISIONS	DWN.	APP.	APP.	DATE

STANLEY CONSULTANTS
INTERNATIONAL CONSULTANTS IN ENGINEERING ARCHITECTURE PLANNING AND MANAGEMENT

DESIGNED / DRAWN CLO / CHECKED OP / APPROVED / APPROVED / DATE MAY 10, 1982

STRUCTURAL STANDARD — CONSTRUCTION JOINT AND KEYWAY DETAILS — SCALE NONE — NO. S-17 — REV. C

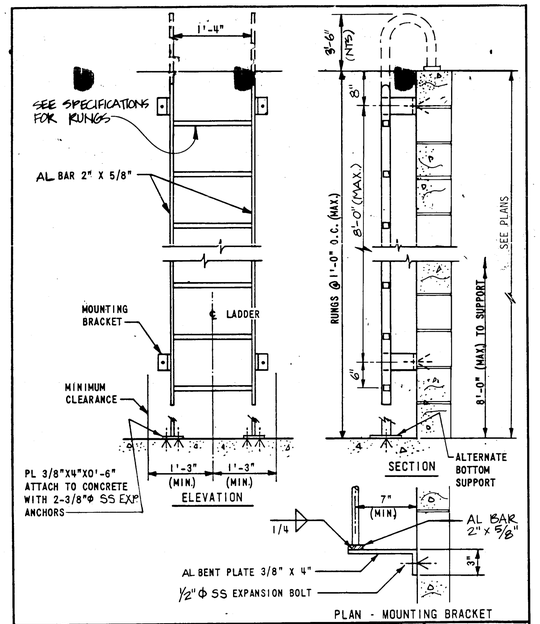

REVISIONS	DWN.	APP.	APP.	DATE

MODIFICATION APPROVAL — PREPARED DWRIGHT / CHECKED / APPROVED / DATE — MODIFICATION: A — FOR JOB NO: 8496

DESIGNED / DRAWN DLS / CHECKED OP / APPROVED / APPROVED / DATE MAY 10, 1982

STRUCTURAL STANDARD — ACCESS LADDER — SCALE NONE — NO. S-18 — REV. 0

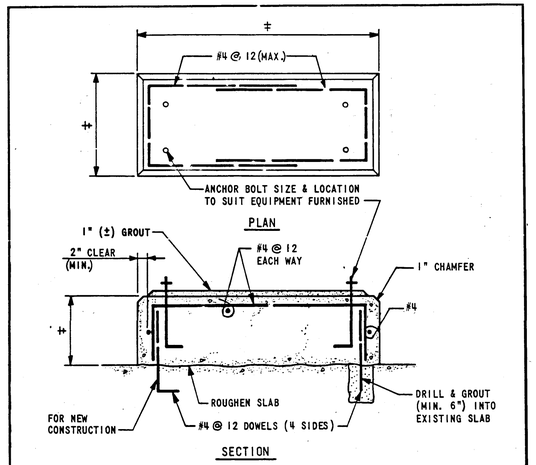

‡ SIZE TO SUIT EQUIPMENT FURNISHED.
FINAL DIMENSIONS SHALL BE SUBJECT TO THE
REVIEW OF THE ENGINEER.

REVISIONS	DWN.	APP.	APP.	DATE

STANLEY CONSULTANTS
INTERNATIONAL CONSULTANTS IN ENGINEERING ARCHITECTURE PLANNING AND MANAGEMENT

DESIGNED / DRAWN WJS / CHECKED OP / APPROVED / APPROVED / DATE MAY 10, 1982

STRUCTURAL STANDARD — EQUIPMENT PAD — SCALE NONE — NO. S-20 — REV. 0

NOTES:

1. ALL CHECKERED PLATE EDGE SUPPORTS TO BE GALVANIZED.
2. CHECKERED PLATE, GRATING AND LADDERS TO BE ALUMINUM (UNO).
3. SECURE ALL GRATING TO FRAMING MEMBERS.

RECORD DRAWING

DATE:	DRAFTED BY:
AUG. 1988	MCA

THESE RECORD DRAWINGS HAVE BEEN PREPARED, IN PART, ON THE BASIS OF INFORMATION COMPILED AND FURNISHED BY OTHERS. THE ENGINEER WILL NOT BE RESPONSIBLE FOR ANY ERRORS OR OMISSIONS WHICH HAVE BEEN INCORPORATED INTO THIS DOCUMENT AS A RESULT.

RICHARD E. WITTER — NEW MEXICO — 8722 — REGISTERED PROFESSIONAL ENGINEER

1 2 3 4 5 6 7 8 9 10 11 12 13 14 15 16 17 18 19 20 21 22 23 24 25 26 27 28 29
2 6 3 6 9 4 3 3 8 8

NO.	DATE	REVISIONS	APPROVED
1	4-22-88	FINAL DRAWING	

DESIGNED W TYNER / DRAWN DWRIGHT / CHECKED W TYNER / APPROVED / APPROVED / DATE MAY 31, 1985

MOLZEN-CORBIN
STANLEY CONSULTANTS
A JOINT VENTURE

NO SCALE
GRAPHIC SCALE

CITY OF ALBUQUERQUE, NEW MEXICO
SOLIDS HANDLING FACILITIES
PHASE II B-3, CONTRACT 1

INTERIM SLUDGE DEWATERING FACILITIES
STRUCTURAL STANDARDS

M-C NO. S-21 — 33 of 112 — SC NO. 8496-S21

© STANLEY CONSULTANTS

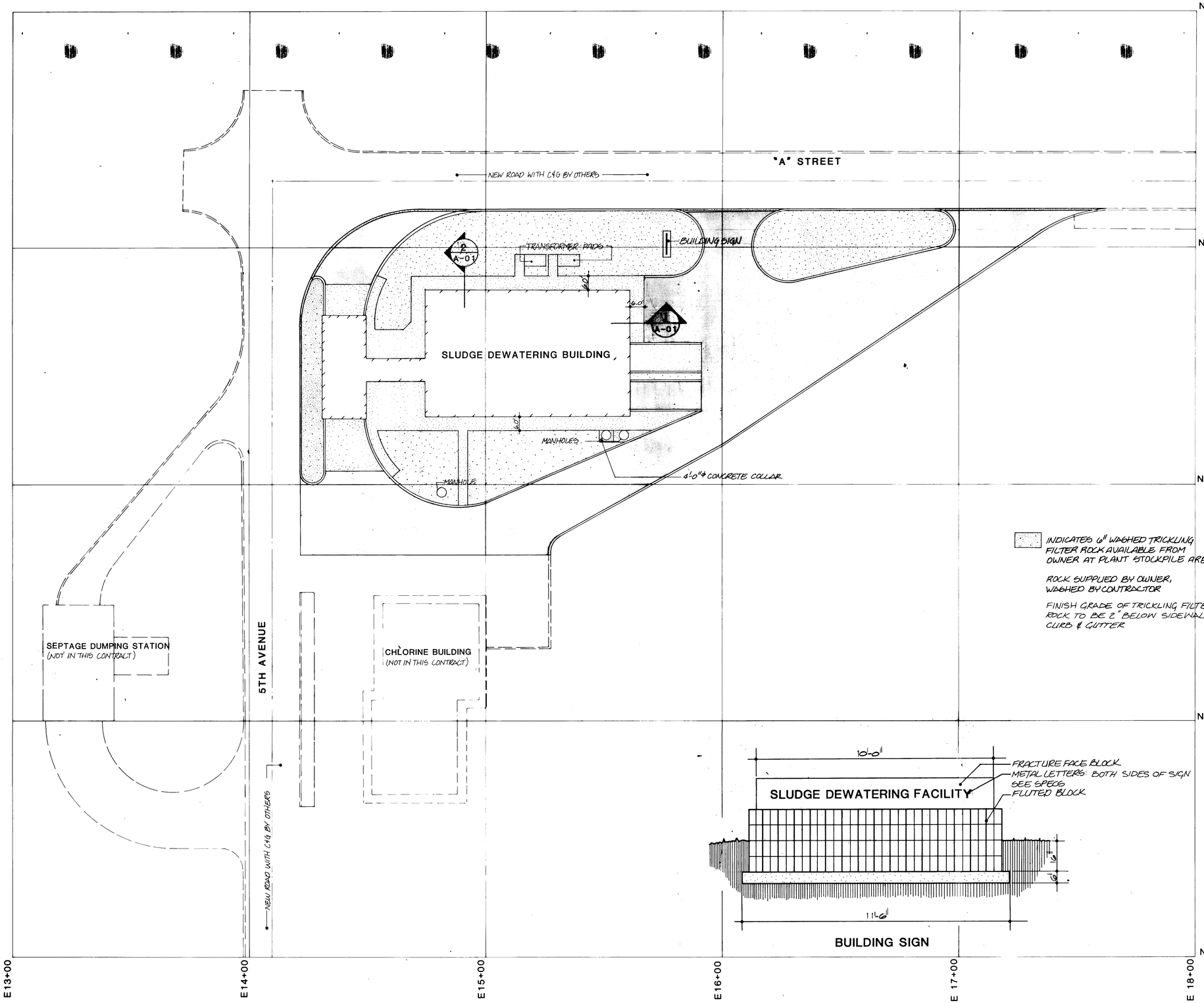

INDICATES 6" WASHED TRICKLING FILTER ROCK AVAILABLE FROM OWNER AT PLANT STOCKPILE AREA.

ROCK SUPPLIED BY OWNER, WASHED BY CONTRACTOR

FINISH GRADE OF TRICKLING FILTER ROCK TO BE 2" BELOW SIDEWALKS, CURB & GUTTER

N

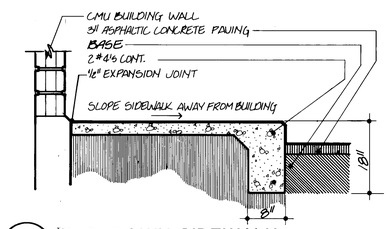

1 A-01 TURNDOWN SIDEWALK
SCALE: 1/2" = 1'-0"

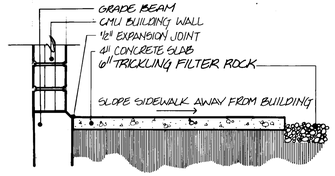

2 A-01 TYPICAL SIDEWALK
SCALE: 1/2" = 1'-0"

FOR SIDEWALK REINFORCING AND BASE DETAILS SEE SHEET G-11

NOTE: COMPACT 6" LAYER OF TRICKLING FILTER ROCK WHERE SHOWN. THE TOP OF THE ROCK LAYER SHALL BE 2" BELOW SIDEWALKS, TOPS OF RETAINING WALLS, TOP OF CURBS, MANHOLES & VALVE BOXES.

RECORD DRAWING	
DATE: AUG. 1988	DRAFTED BY: MCA

THESE RECORD DRAWINGS HAVE BEEN PREPARED, IN PART, ON THE BASIS OF INFORMATION COMPILED AND FURNISHED BY OTHERS. THE ENGINEER WILL NOT BE RESPONSIBLE FOR ANY ERRORS OR OMISSIONS WHICH HAVE BEEN INCORPORATED INTO THIS DOCUMENT AS A RESULT.

REGISTERED PROFESSIONAL ENGINEER AND LAND SURVEYOR NEW MEXICO DAYTON T. MOLZEN

1 2 3 4 5 6 7 8 9 10 11 12 13 14 15 16 17 18 19 20 21 22 23 24 25 26 27 28 29
2 6 3 6 9 4 3 4 8 8

NO.	DATE	REVISIONS	APPROVED

DESIGNED WDS
DRAWN
CHECKED WDS
APPROVED
APPROVED
DATE

MOLZEN-CORBIN
STANLEY CONSULTANTS
A JOINT VENTURE

1" = 20'
0 20' 40'
GRAPHIC SCALE

CITY OF ALBUQUERQUE, NEW MEXICO
SOLIDS HANDLING FACILITIES
PHASE II B-3, CONTRACT 1

INTERIM SLUDGE DEWATERING FACILITIES
DEWATERING BUILDING
LANDSCAPE PLAN

M-C NO. 832221
A-01
34 of 112
SC NO.

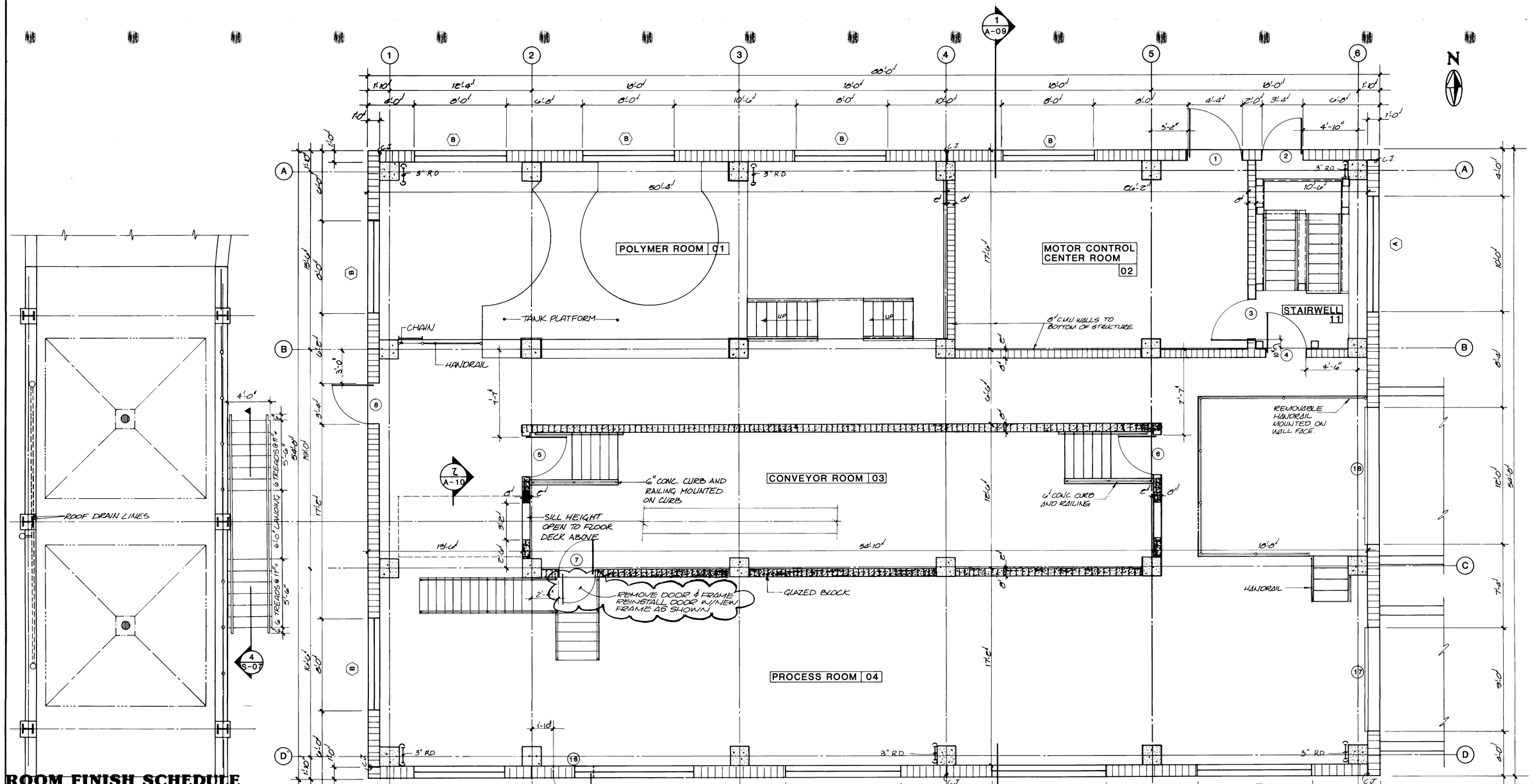

ROOM FINISH SCHEDULE

ROOM NUMBER	ROOM NAME	FLOOR: Seamless Floor	FLOOR: V.A.T.	FLOOR: Metal Panels	FLOOR: Metal Grating	FLOOR: Ceramic Tile	BASE: Vinyl Cove	BASE: Ceramic Tile	WALLS: Paint Epoxy	WALLS: Trtd. Acoustical	WALLS: CMU	WALLS: CMU Sound	WALLS: Glazed Block	WALLS: FRP Board	WALLS: Drywall	CEILINGS: 2x4 Acoustical	CEILINGS: Paint Epoxy	CEILINGS: Trtd. Acoustical	CEILINGS: FRP Board
01	Polymer Room	●							●		●						●		
02	Motor Control Room		●				●		●		●						●		
03	Conveyor Room	●											●				●		
04	Process Room	●							●		●						●		
05	Polymer & Feed Room	●							●		●						●		
06	Boiler Room	●							●		●						●		
07	Toilet					●		●	●								●		
08	Operations & Control Rm.		●				●		●					●		●			
09	Centrifuge Room	●							●	●		●						●	
10	Conveyor Entry Room	●							●		●						●		
11	Stairwell	●							●								●		
12	Stair & Conveyor Enclsre			●										●					●
13	Sludge Bin Room				●									●					●

GLAZED BLOCK

RECORD DRAWING

DATE:	DRAFTED BY:
AUG. 1988	MCA

THESE RECORD DRAWINGS HAVE BEEN PREPARED, IN PART, ON THE BASIS OF INFORMATION COMPILED AND FURNISHED BY OTHERS. THE ENGINEER WILL NOT BE RESPONSIBLE FOR ANY ERRORS OR OMISSIONS WHICH HAVE BEEN INCORPORATED INTO THIS DOCUMENT AS A RESULT.

REGISTERED PROFESSIONAL ENGINEER AND LAND SURVEYOR NEW MEXICO DAVID E. McCLENDON

NO.	DATE	REVISIONS	APPROVED

DESIGNED WP
DRAWN
CHECKED WP
APPROVED
APPROVED
DATE

MOLZEN-CORBIN
STANLEY CONSULTANTS
A JOINT VENTURE

1/4"=1'-0"
0 4 6 8
GRAPHIC SCALE

CITY OF ALBUQUERQUE, NEW MEXICO
SOLIDS HANDLING FACILITIES
PHASE II B-3, CONTRACT 1

INTERIM SLUDGE DEWATERING FACILITIES
DEWATERING BUILDING
GROUND FLOOR PLAN

M-C NO. 832221
A-02
35 OF 112
SC NO.

1 2 3 4 5 6 7 8 9 10 11 12 13 14 15 16 17 18 19 20 21 22 23 24 25 26 27 28 29
2 6 3 6 9 4 3 5 8 8

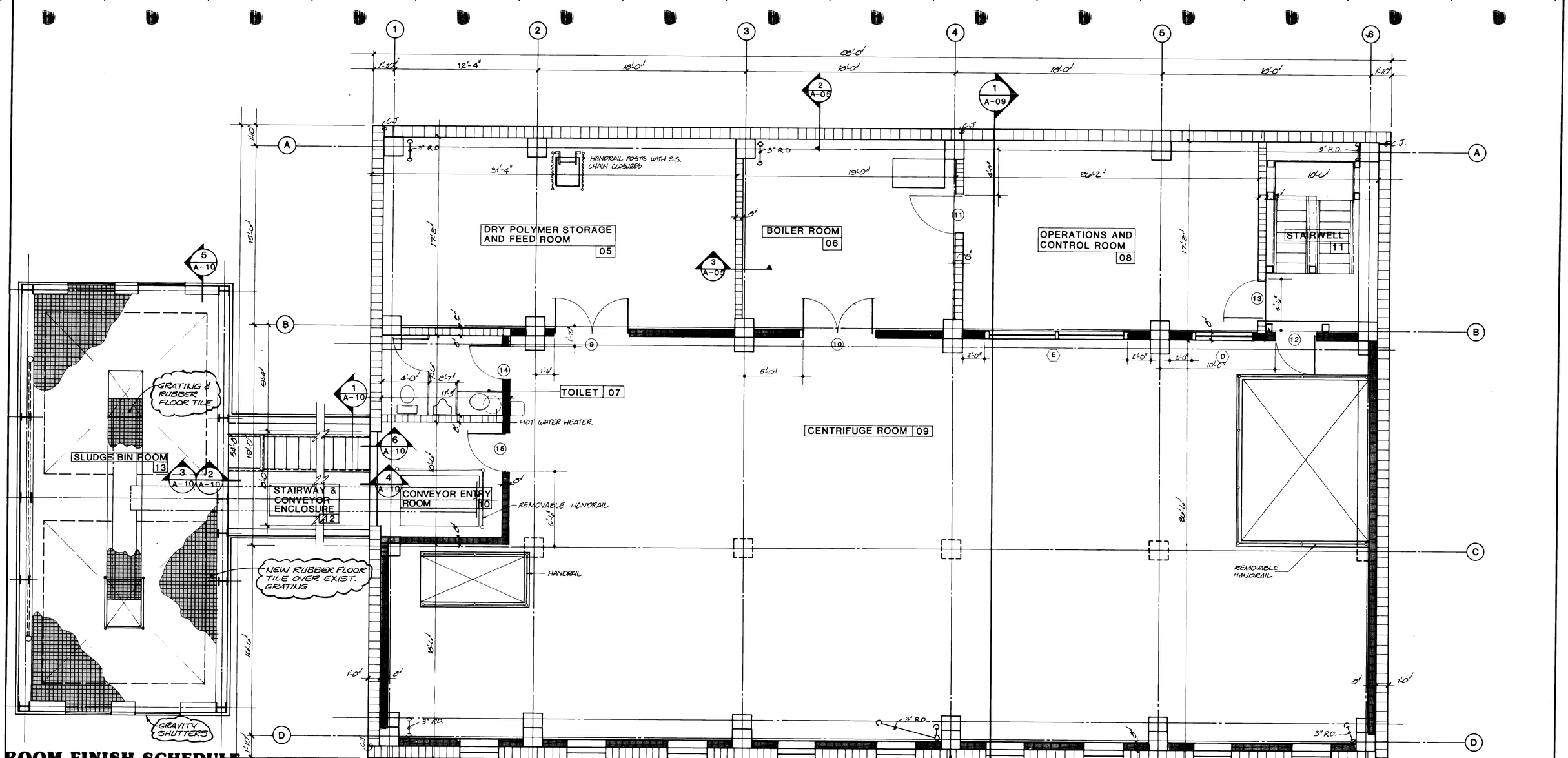

ROOM FINISH SCHEDULE

ROOM NUMBER	ROOM NAME	FLOOR: Seamless Floor	FLOOR: V.A.T.	FLOOR: Metal Panels	FLOOR: Metal Grating	FLOOR: Ceramic Tile	FLOOR: (RUBBER FLOOR TILE)	BASE: Vinyl Cove	BASE: Ceramic Tile	WALLS: Paint Epoxy	WALLS: Trtd. Acoustical	WALLS: CMU	WALLS: CMU Sound	WALLS: Glazed Block	WALLS: FRP Board	WALLS: Drywall	CEILINGS: 2x4 Acoustical	CEILINGS: Paint Epoxy	CEILINGS: Trtd. Acoustical	CEILINGS: FRP Board
01	Polymer Room	●								●		●						●		
02	Motor Control Room		●					●		●		●						●		
03	Conveyor Room	●												●				●		
04	Process Room	●								●		●						●		
05	Polymer & Feed Room	●								●		●						●		
06	Boiler Room	●								●		●						●		
07	Toilet					●			●	●								●		
08	Operations & Control Rm.		●					●		●					●		●			
09	Centrifuge Room	●								●	●		●						●	
10	Conveyor Entry Room	●								●		●						●		
11	Stairwell	●								●								●		
12	Stair & Conveyor Enclsre.			●											●					●
13	Sludge Bin Room				●		(●)								●					●

RECORD DRAWING

DATE: AUG. 1988 | DRAFTED BY: MCA

THESE RECORD DRAWINGS HAVE BEEN PREPARED, IN PART, ON THE BASIS OF INFORMATION COMPILED AND FURNISHED BY OTHERS. THE ENGINEER WILL NOT BE RESPONSIBLE FOR ANY ERRORS OR OMISSIONS WHICH HAVE BEEN INCORPORATED INTO THIS DOCUMENT AS A RESULT.

1 A-09

SOUND BLOCK

REGISTERED PROFESSIONAL ENGINEER — STATE OF NEW MEXICO — RAYMOND L. MOLZEN

1 2 3 4 5 6 7 8 9 10 11 12 13 14 15 16 17 18 19 20 21 22 23 24 25 26 27 28 29
2 6 3 6 9 4 3 6 8 8

NO.	DATE	REVISIONS	APPROVED

DESIGNED WS
DRAWN DV
CHECKED WS
APPROVED
APPROVED
DATE

MOLZEN-CORBIN
STANLEY CONSULTANTS
A JOINT VENTURE

1/4" = 1'-0"
0 4 8 16
GRAPHIC SCALE

CITY OF ALBUQUERQUE, NEW MEXICO
SOLIDS HANDLING FACILITIES
PHASE II B-3, CONTRACT 1

INTERIM SLUDGE DEWATERING FACILITIES
DEWATERING BUILDING
SECOND FLOOR PLAN

M-C NO. 832221
A-03
36 OF 112
SC NO.

82624

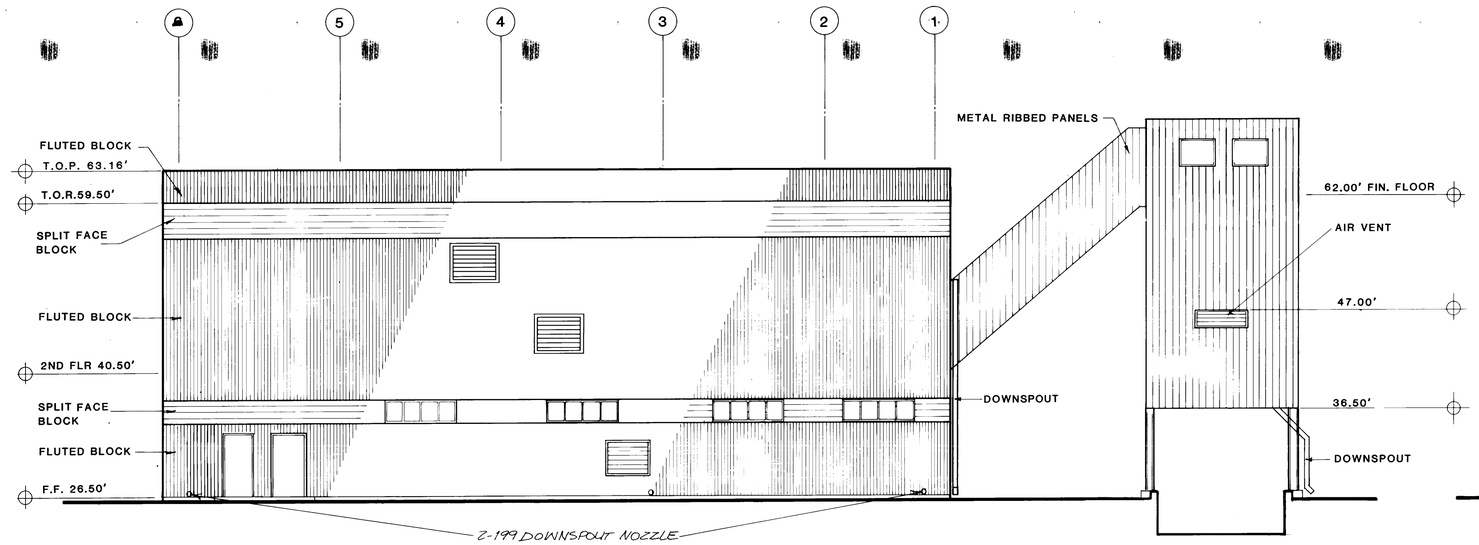

NORTH ELEVATION

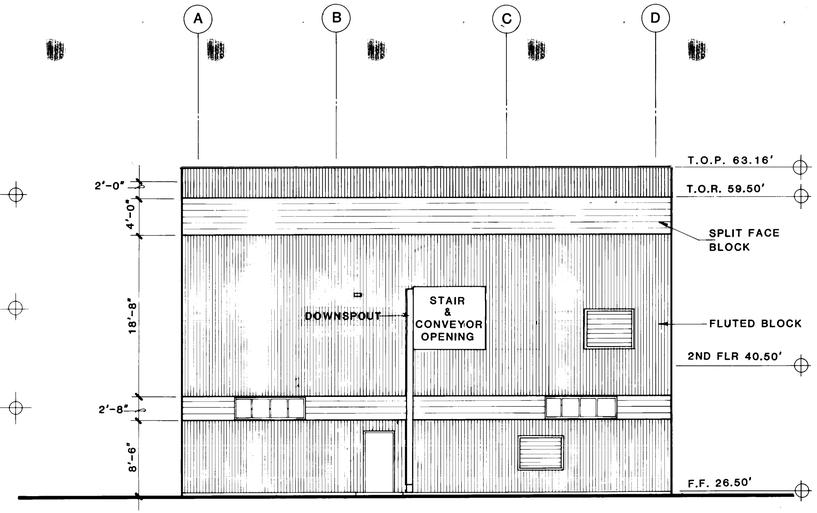

WEST ELEVATION

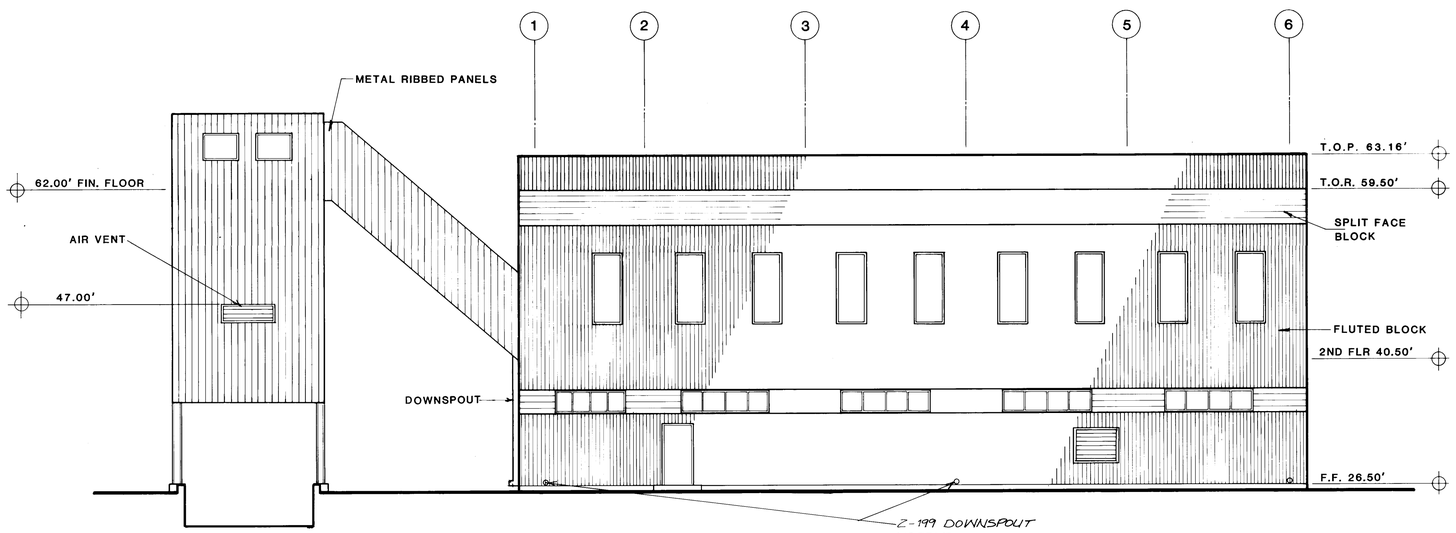

SOUTH ELEVATION

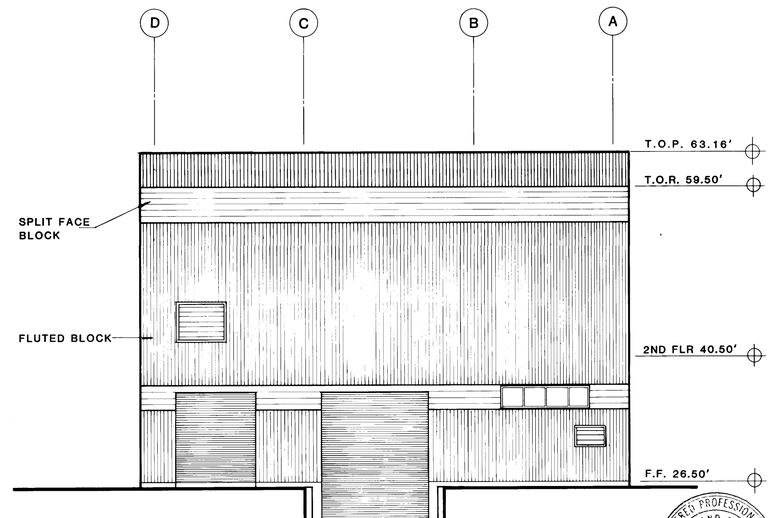

EAST ELEVATION

RECORD DRAWING	
DATE: AUG. 1988	DRAFTED BY: MCA

THESE RECORD DRAWINGS HAVE BEEN PREPARED, IN PART, ON THE BASIS OF INFORMATION COMPILED AND FURNISHED BY OTHERS. THE ENGINEER WILL NOT BE RESPONSIBLE FOR ANY ERRORS OR OMISSIONS WHICH HAVE BEEN INCORPORATED INTO THIS DOCUMENT AS A RESULT.

REGISTERED PROFESSIONAL ENGINEER AND LAND SURVEYOR NEW MEXICO DAXTON T. MOLZEN

1 2 3 4 5 6 7 8 9 10 11 12 13 14 15 16 17 18 19 20 21 22 23 24 25 26 27 28 29
2 6 3 6 9 4 3 7 8 8

NO.	DATE	REVISIONS	APPROVED

DESIGNED WR
DRAWN R.A.
CHECKED WR
APPROVED
APPROVED
DATE

MOLZEN-CORBIN
STANLEY CONSULTANTS
A JOINT VENTURE

1/8"=1'-0"
0 3 12 16
GRAPHIC SCALE

CITY OF ALBUQUERQUE, NEW MEXICO
SOLIDS HANDLING FACILITIES
PHASE II B-3, CONTRACT 1

INTERIM SLUDGE DEWATERING FACILITIES
DEWATERING BUILDING
ELEVATIONS

M-C NO. 832221
A-04
37 of 112
SC NO.

82624

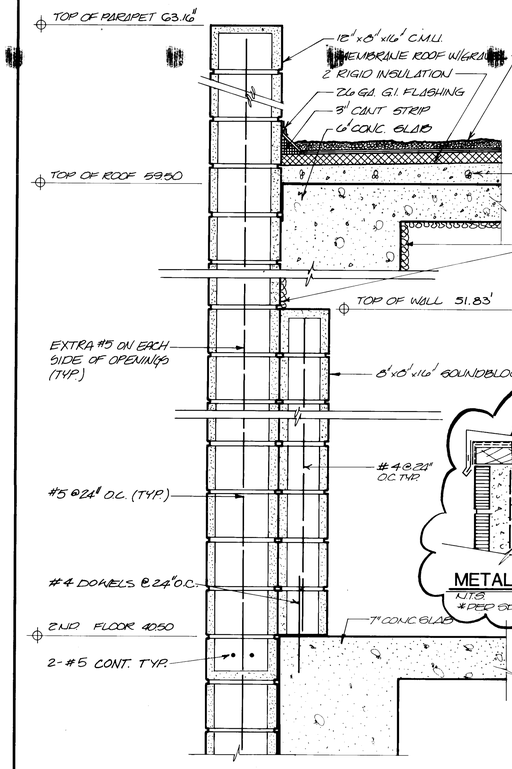

1 A-03 WALL SECTION
1"=1'-0"

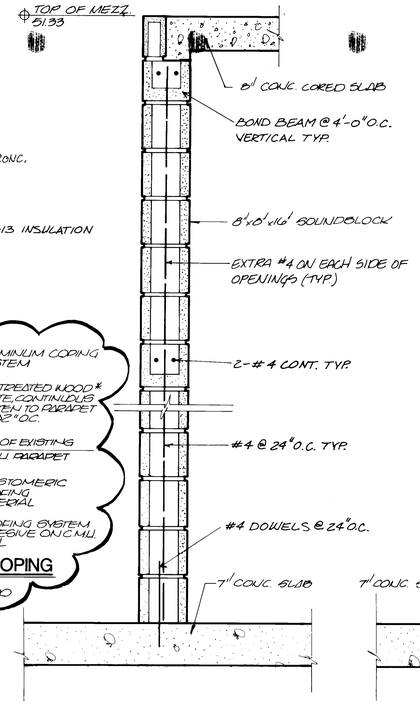

2 A-03 WALL SECTION
1"=1'-0"

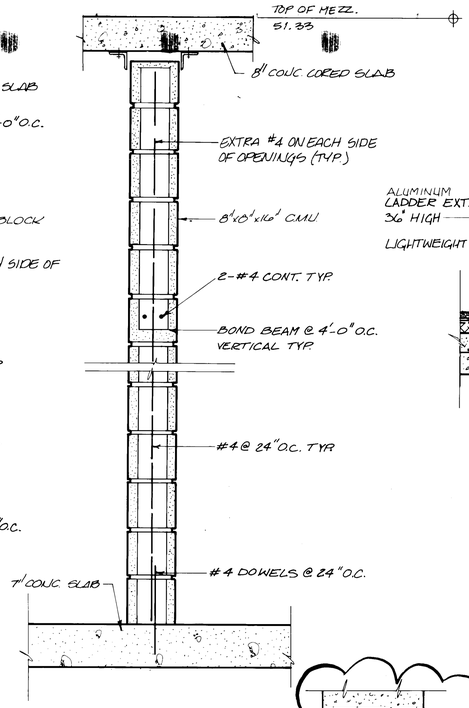

3 A-03 WALL SECTION
1"=1'-0"

METAL PARAPET COPING
N.T.S.
*PER SPEC. SECTION 61100

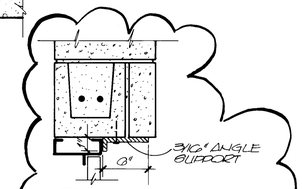

D HEAD (SUPPORT ADDED)
N.T.S.

RECORD DRAWING

DATE: AUG 1988	DRAFTED BY: MCA

THESE RECORD DRAWINGS HAVE BEEN PREPARED IN PART, ON THE BASIS OF INFORMATION COMPILED AND FURNISHED BY OTHERS. THE ENGINEER WILL NOT BE RESPONSIBLE FOR ANY ERRORS OR OMISSIONS WHICH HAVE BEEN INCORPORATED INTO THIS DOCUMENT AS A RESULT.

REGISTERED PROFESSIONAL LAND SURVEYOR NEW MEXICO DALTON T. MCGEE

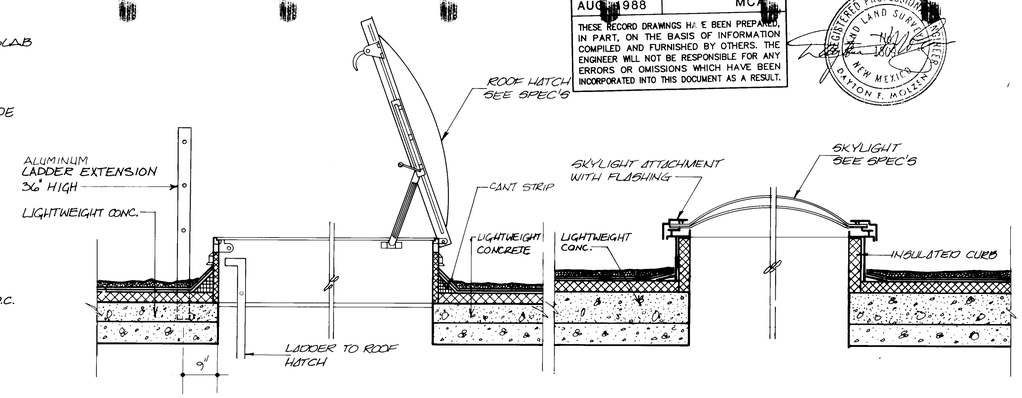

4 A-06 ROOF HATCH DETAIL
N.T.S.

5 A-06 SKYLIGHT DETAIL
N.T.S.

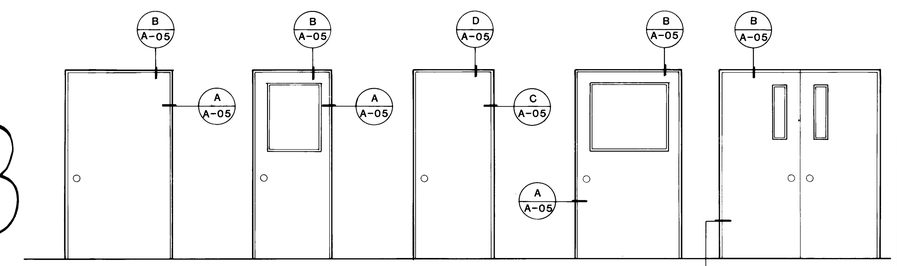

DOOR ELEVATIONS

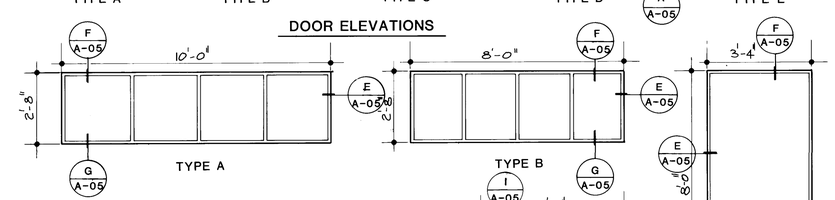

WINDOW ELEVATIONS

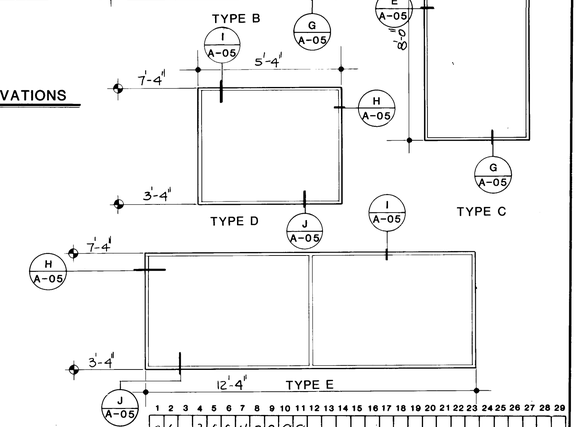

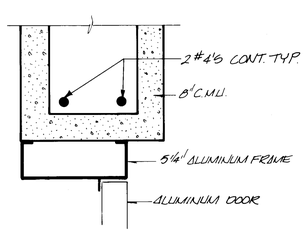

A A-05 JAMB
3"=1'-0"

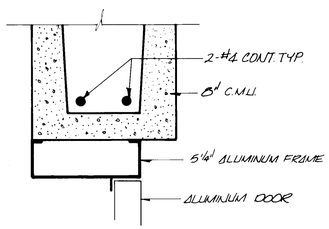

B A-05 HEAD
3"=1'-0"

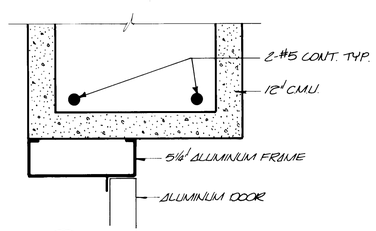

C A-05 JAMB
3"=1'-0"

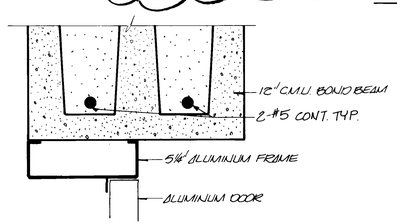

D A-05 HEAD
3"=1'-0"

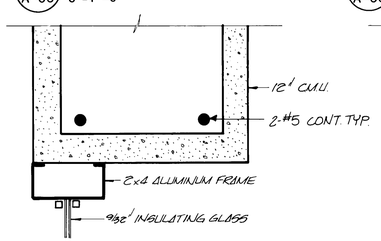

E A-05 JAMB (H SIMILAR)
3"=1'-0"

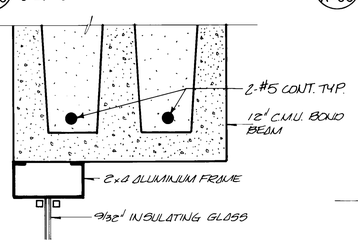

F A-05 HEAD (I SIMILAR)
3"=1'-0"

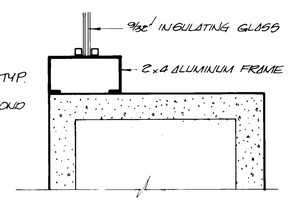

G A-05 SILL (J SIMILAR)
3"=1'-0"

DOOR SCHEDULE

NO.	SIZE	QUANT	TYPE	MAT'L	HDW. NO.	LABEL	DOOR Head	DOOR Jamb	DOOR Jamb	DOOR Sill				NAME PLATE	GLASS	REMARKS
1	4° x 7°		A	Alum			D	C	C						None	
2	3° x 7°		C	Alum			D	C	C						None	
3	4° x 7°		D	Alum			B	A	A						36"x30"	
4	3° x 7°		B	Alum			B	A	A						24"x30"	
5	3° x 7°		B	Alum			B	A	A						24"x30"	
6	3° x 7°		B	Alum			B	A	A						24"x30"	
7	3° x 7°		B	Alum			B	A	A						6"x24"	
8	3° x 7°		C	Alum			D	C	C						None	
9	6° x 7°		E	Alum			B	A	A						(2)6"x24"	
10	6° x 7°		E	Alum			B	A	A						None	
11	3° x 7°		B	Alum			B	A	A						24"x30"	
12	3° x 7°		B	Alum			B	A	A						24"x30"	
13	3° x 7°		B	Alum			B	A	A						24"x30"	
14	3° x 7°		C	Alum			B	A	A						None	
15	3° x 7°		B	Alum			B	A	A						24"x30"	
16	3° x 7°		C	Alum			D	C	C						None	
17	9° x 10°			Steel			9-A-10	-	-						None	
18	12° x14°			Steel			9-A-10	-	-						None	

NO.	DATE	REVISIONS	APPROVED

DESIGNED WJ
DRAWN AV
CHECKED WJ
APPROVED
APPROVED
DATE

MOLZEN-CORBIN
STANLEY CONSULTANTS
A JOINT VENTURE

3/4"=1'-0" 0 1' 2' 3'
1"=1'-0" 0 1' 2'
GRAPHIC SCALE

CITY OF ALBUQUERQUE, NEW MEXICO
SOLIDS HANDLING FACILITIES
PHASE II B-3, CONTRACT 1

INTERIM SLUDGE DEWATERING FACILITIES
DEWATERING BUILDING
SECTIONS AND DETAILS

M-C NO. 832221
A-05
38 OF 112
SC NO.

82624

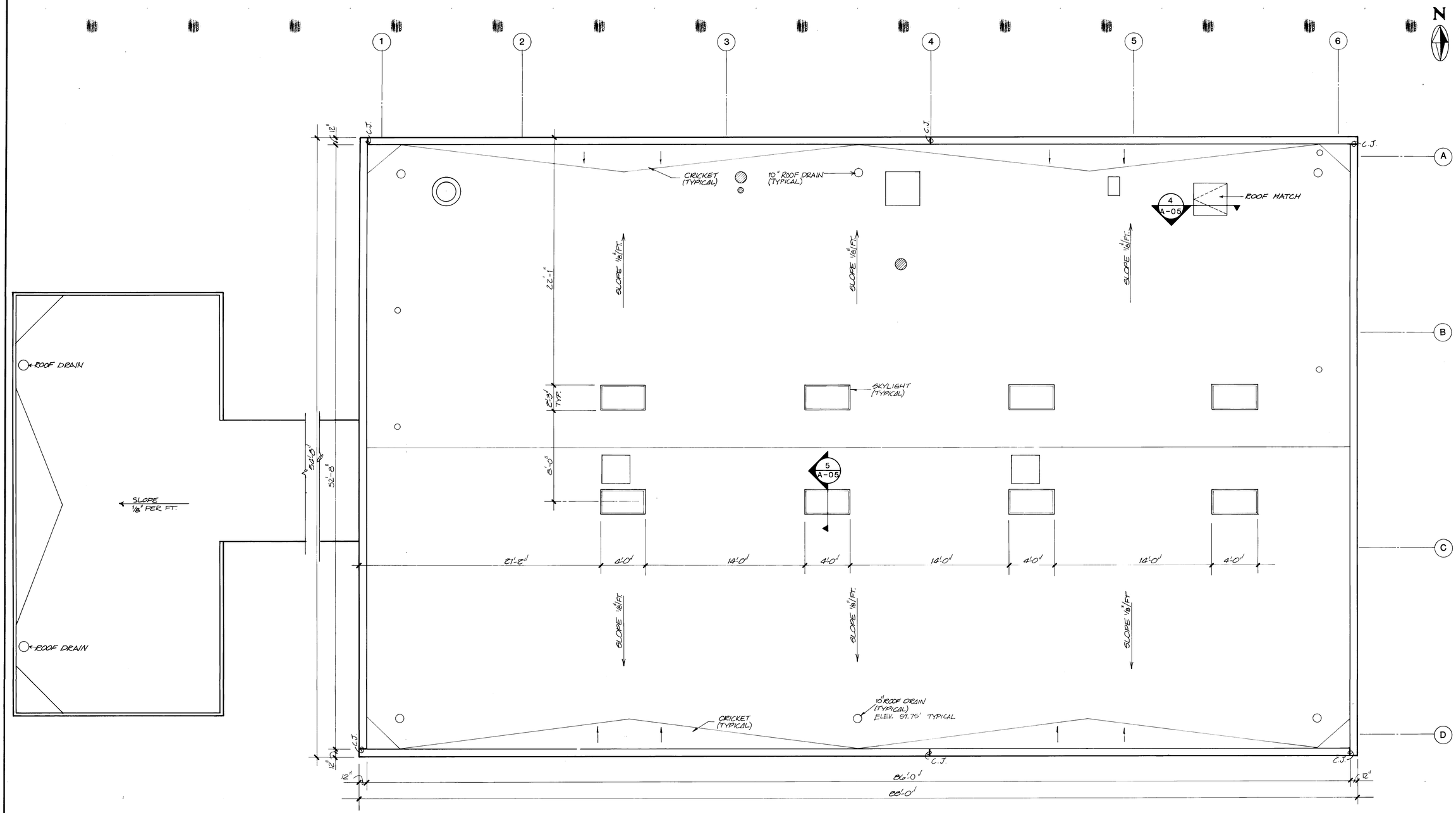

RECORD DRAWING

DATE:	DRAFTED BY:
AUG. 1988	MCA

THESE RECORD DRAWINGS HAVE BEEN PREPARED, IN PART, ON THE BASIS OF INFORMATION COMPILED AND FURNISHED BY OTHERS. THE ENGINEER WILL NOT BE RESPONSIBLE FOR ANY ERRORS OR OMISSIONS WHICH HAVE BEEN INCORPORATED INTO THIS DOCUMENT AS A RESULT.

REGISTERED PROFESSIONAL ENGINEER AND LAND SURVEYOR — NEW MEXICO — DAYTON F. MOLZEN — No. 1809

1 2 3 4 5 6 7 8 9 10 11 12 13 14 15 16 17 18 19 20 21 22 23 24 25 26 27 28 29

2 6 . 3 6 9 4 3 9 8 8

NO.	DATE	REVISIONS	APPROVED

DESIGNED W.L.
DRAWN R.a
CHECKED W.L.
APPROVED
APPROVED
DATE

MOLZEN-CORBIN
STANLEY CONSULTANTS
A JOINT VENTURE

1/4" . 1'-0"
0 4 6 8
GRAPHIC SCALE

CITY OF ALBUQUERQUE, NEW MEXICO
SOLIDS HANDLING FACILITIES
PHASE II B-3, CONTRACT 1

INTERIM SLUDGE DEWATERING FACILITIES
DEWATERING BUILDING
ROOF PLAN

M-C NO. 832221
A-06
39 OF 112
SC NO.

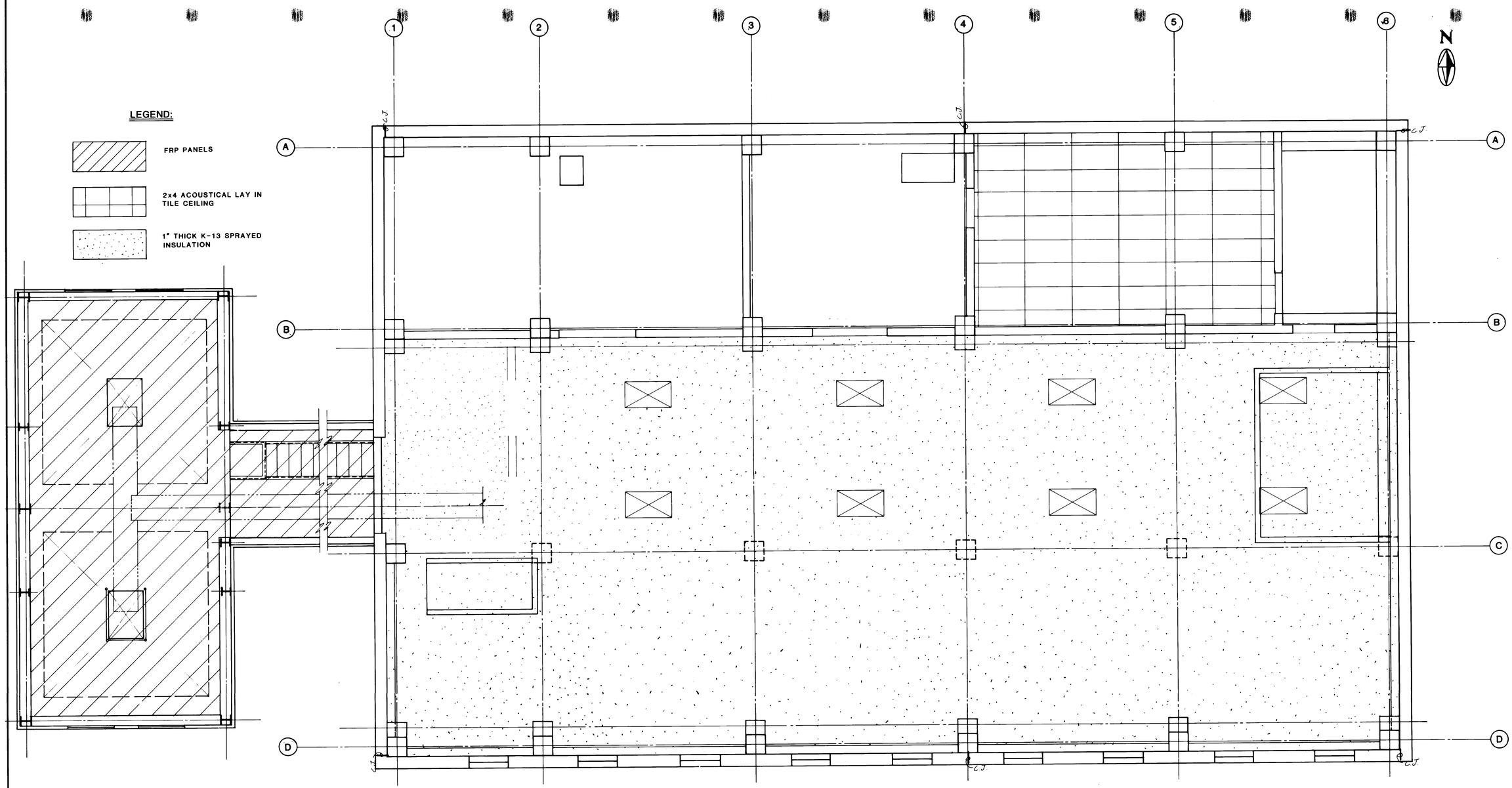

NOTES:

- CEILING AREA ON LOWER LEVEL TO RECEIVE EPOXY PAINT
- CEILING ON MEZZININE AREA TO RECEIVE EPOXY PAINT
- ALL AREAS WITH NO INDICATIONS RECEIVE EPOXY PAINT

RECORD DRAWING

DATE:	DRAFTED BY:
AUG. 1988	MCA

THESE RECORD DRAWINGS HAVE BEEN PREPARED, IN PART, ON THE BASIS OF INFORMATION COMPILED AND FURNISHED BY OTHERS. THE ENGINEER WILL NOT BE RESPONSIBLE FOR ANY ERRORS OR OMISSIONS WHICH HAVE BEEN INCORPORATED INTO THIS DOCUMENT AS A RESULT.

REGISTERED PROFESSIONAL ENGINEER AND LAND SURVEYOR NEW MEXICO CATION F. McGLZEN

1 2 3 4 5 6 7 8 9 10 11 12 13 14 15 16 17 18 19 20 21 22 23 24 25 26 27 28 29

2 6 3 6 9 4 4 0 8 8

NO.	DATE	REVISIONS	APPROVED

DESIGNED W.L.
DRAWN J.H.
CHECKED W.L.
APPROVED
APPROVED
DATE

MOLZEN-CORBIN
STANLEY CONSULTANTS
A JOINT VENTURE

1/4" = 1'-0"
0 4 8 8
GRAPHIC SCALE

CITY OF ALBUQUERQUE, NEW MEXICO
SOLIDS HANDLING FACILITIES
PHASE II B-3, CONTRACT 1

INTERIM SLUDGE DEWATERING FACILITIES
DEWATERING BUILDING
SECOND FLOOR REFLECTED CEILING PLAN

M-C NO. 832221
A-07
40 OF 112
SC NO.

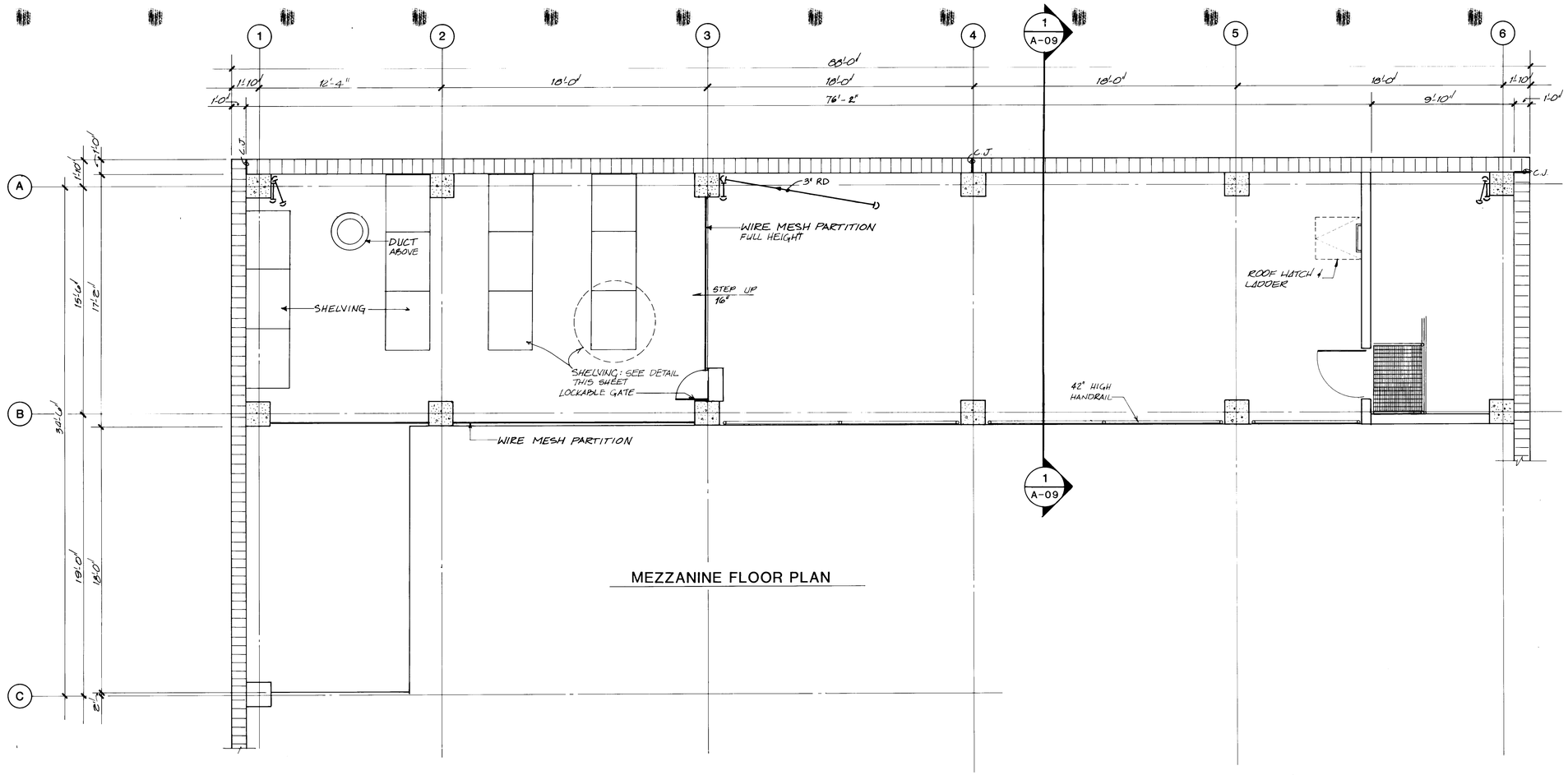

MEZZANINE FLOOR PLAN

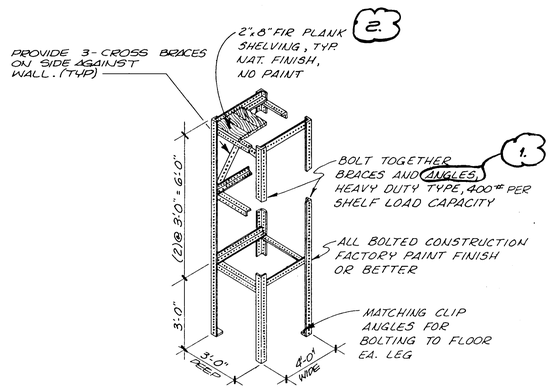

STORAGE SHELVING DETAIL *

SHELVING RENOVATIONS

1. ON ALL 4'-0" WIDE SIDES OF SHELVES, REMOVE HORIZ. L'S & REASSEMBLE W/LEGS TURNED DOWN.
2. REPLACE 3'LG PLANKS W/4'LG PLANKS

* REASON FOR CHANGE: TO ALLOW EASIER ACCESS TO & FROM SHELFS W/O ANGLE PROTRUDING UP.

RECORD DRAWING

DATE:	DRAFTED BY:
AUG. 1988	MCA

THESE RECORD DRAWINGS HAVE BEEN PREPARED, IN PART, ON THE BASIS OF INFORMATION COMPILED AND FURNISHED BY OTHERS. THE ENGINEER WILL NOT BE RESPONSIBLE FOR ANY ERRORS OR OMISSIONS WHICH HAVE BEEN INCORPORATED INTO THIS DOCUMENT AS A RESULT.

REGISTERED PROFESSIONAL ENGINEER AND LAND SURVEYOR NEW MEXICO DAXTON F. McCLEAN

1 2 3 4 5 6 7 8 9 10 11 12 13 14 15 16 17 18 19 20 21 22 23 24 25 26 27 28 29

26 | 369441 88

NO.	DATE	REVISIONS	APPROVED

DESIGNED W.L.
DRAWN R.V.
CHECKED W.L.
APPROVED
APPROVED
DATE

MOLZEN-CORBIN
STANLEY CONSULTANTS
A JOINT VENTURE

1/4" = 1'-0"
0 4 6 8
GRAPHIC SCALE

CITY OF ALBUQUERQUE, NEW MEXICO
SOLIDS HANDLING FACILITIES
PHASE II B-3, CONTRACT 1

INTERIM SLUDGE DEWATERING FACILITIES
DEWATERING BUILDING
MEZZANINE FLOOR PLAN

M-C NO. 832221
A-08
41 of 112
SC NO.

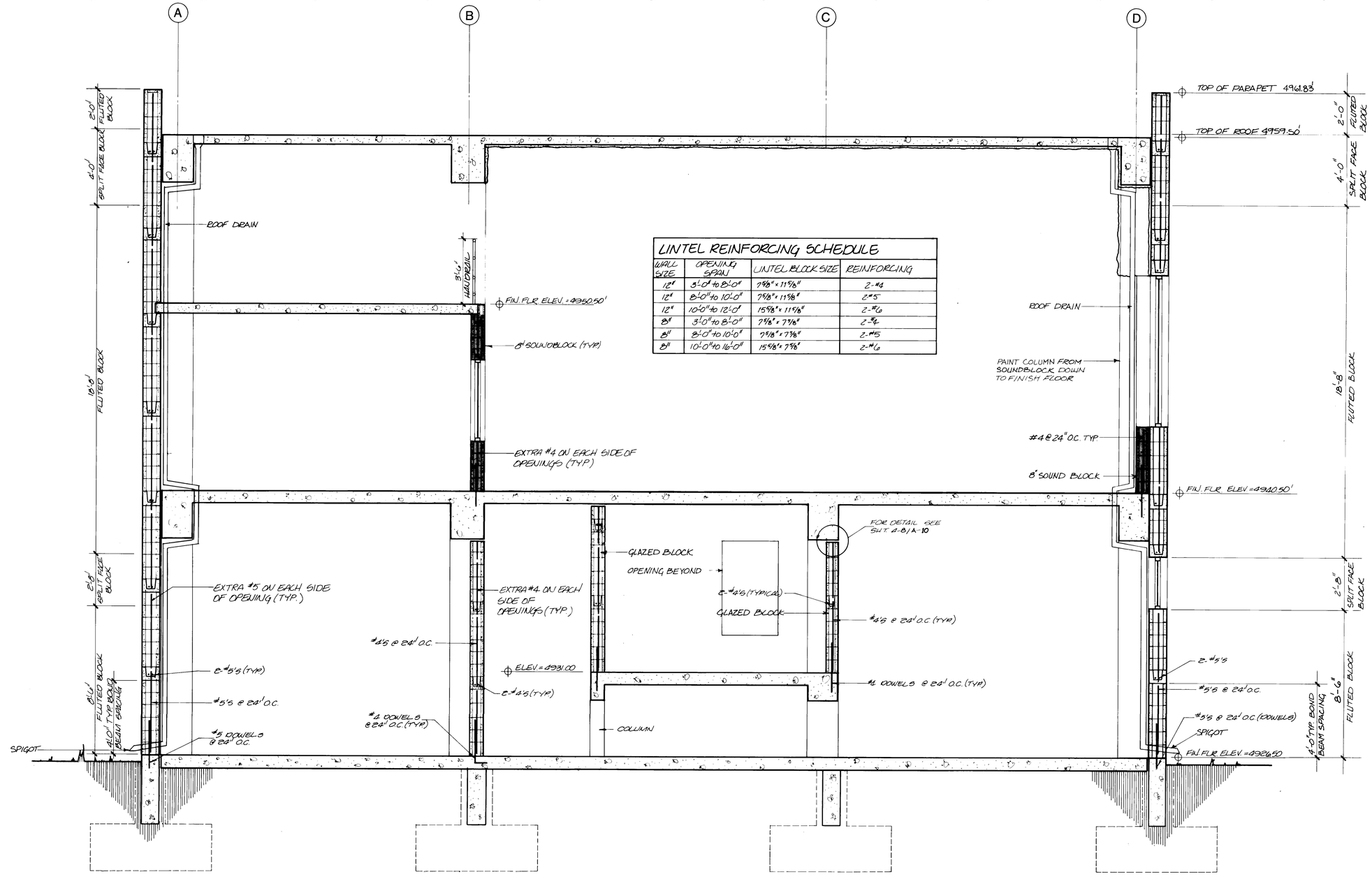

1 A-02 BUILDING SECTION
A-03

LINTEL REINFORCING SCHEDULE

WALL SIZE	OPENING SPAN	LINTEL BLOCK SIZE	REINFORCING
12"	3'-0" to 8'-0"	7 5/8" x 11 5/8"	2-#4
12"	8'-0" to 10'-0"	7 5/8" x 11 5/8"	2-#5
12"	10'-0" to 12'-0"	15 5/8" x 11 5/8"	2-#6
8"	3'-0" to 8'-0"	7 5/8" x 7 5/8"	2-#4
8"	8'-0" to 10'-0"	7 5/8" x 7 5/8"	2-#5
8"	10'-0" to 16'-0"	15 5/8" x 7 5/8"	2-#6

RECORD DRAWING

DATE: AUG. 1988

DRAFTED BY: MCA

THESE RECORD DRAWINGS HAVE BEEN PREPARED, IN PART, ON THE BASIS OF INFORMATION COMPILED AND FURNISHED BY OTHERS. THE ENGINEER WILL NOT BE RESPONSIBLE FOR ANY ERRORS OR OMISSIONS WHICH HAVE BEEN INCORPORATED INTO THIS DOCUMENT AS A RESULT.

REGISTERED PROFESSIONAL ENGINEER — LAND SURVEYOR — 1809 — NEW MEXICO — DALTON F. MOLZEN

1 2 3 4 5 6 7 8 9 10 11 12 13 14 15 16 17 18 19 20 21 22 23 24 25 26 27 28 29

2 6 3 6 9 4 4 2 8 8

NO.	DATE	REVISIONS	APPROVED

DESIGNED W.R.
DRAWN
CHECKED W.R.
APPROVED
APPROVED
DATE

MOLZEN-CORBIN
STANLEY CONSULTANTS
A JOINT VENTURE

3/8" 1'-0"
0 1' 2' 3' 4' 5' 6'
GRAPHIC SCALE

CITY OF ALBUQUERQUE, NEW MEXICO
SOLIDS HANDLING FACILITIES
PHASE II B-3, CONTRACT 1

INTERIM SLUDGE DEWATERING FACILITIES
DEWATERING BUILDING
BUILDING SECTION

M-C NO. 832221
A-09
42 OF 112
SC NO.

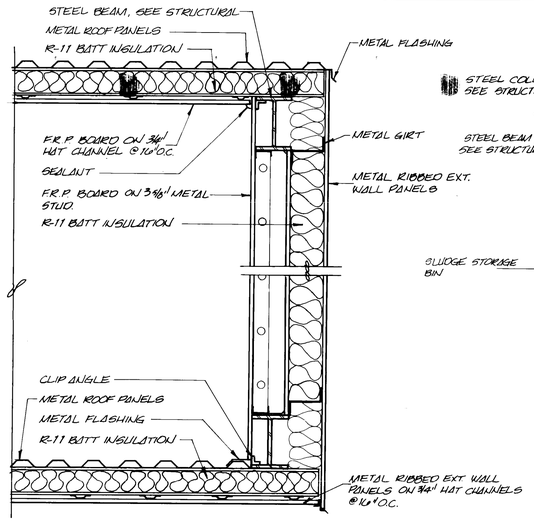

1 A-03 SECTION THRU CONVEYOR SHAFT

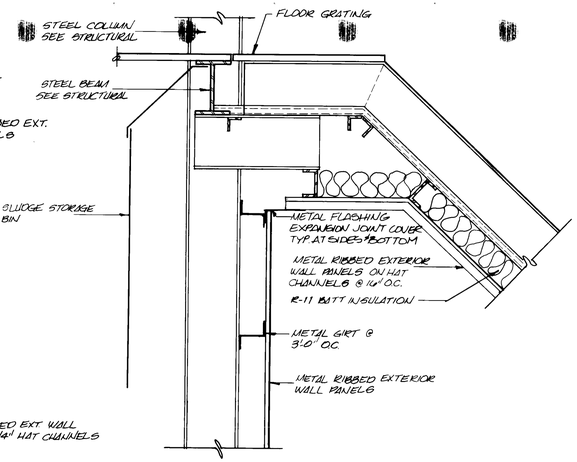

2 A-03 CONVEYOR SHAFT AT FLOOR TO STORAGE BIN

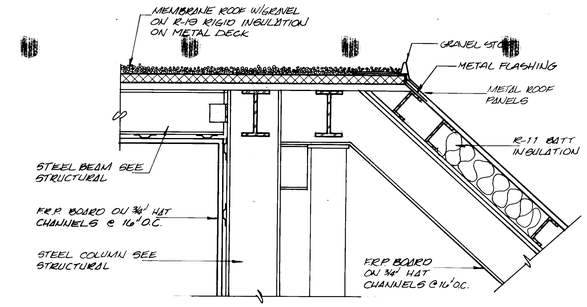

3 A-03 CONVEYOR SHAFT AT ROOF TO STORAGE BIN

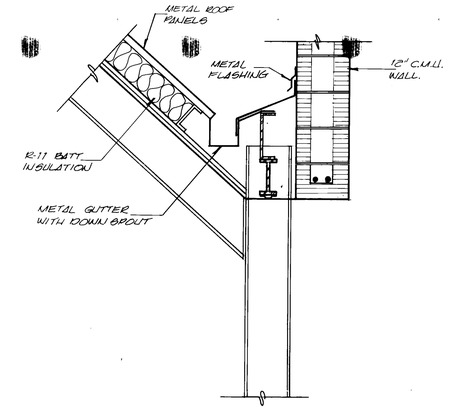

4 A-03 CONVEYOR SHAFT TO MAIN BUILDING AT ROOF

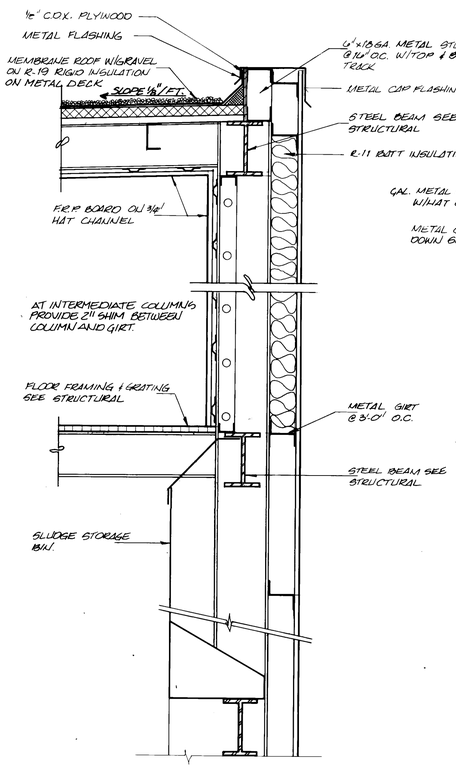

5 A-03 WALL SECTION AT STORAGE BIN

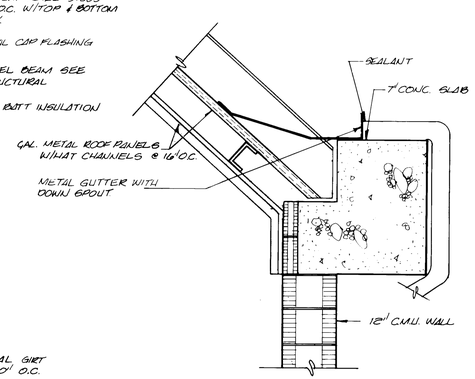

6 A-03 CONVEYOR SHAFT TO MAIN BUILDING AT FLOOR

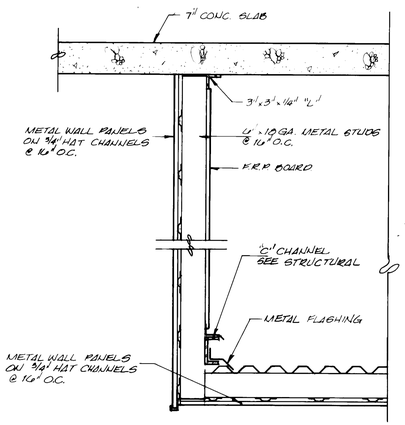

7 A-02 INTERIOR CONVEYOR ENCLOSURE

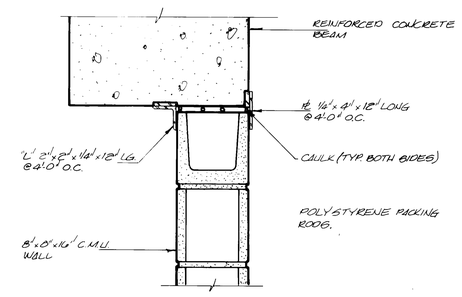

8 A-09 TOP OF WALL CONNECTION

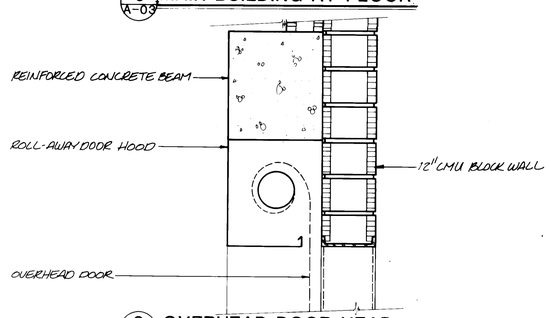

9 A-05 OVERHEAD DOOR HEAD

RECORD DRAWING

DATE:	DRAFTED BY:
AUG. 1988	MCA

THESE RECORD DRAWINGS HAVE BEEN PREPARED, IN PART, ON THE BASIS OF INFORMATION COMPILED AND FURNISHED BY OTHERS. THE ENGINEER WILL NOT BE RESPONSIBLE FOR ANY ERRORS OR OMISSIONS WHICH HAVE BEEN INCORPORATED INTO THIS DOCUMENT AS A RESULT.

REGISTERED PROFESSIONAL ENGINEER AND LAND SURVEYOR NEW MEXICO DALTON L. MAGZEN

1 2 3 4 5 6 7 8 9 10 11 12 13 14 15 16 17 18 19 20 21 22 23 24 25 26 27 28 29
26 3 6 9 4 4 3 8

NO.	DATE	REVISIONS	APPROVED

DESIGNED WB
DRAWN DY
CHECKED WB
APPROVED
APPROVED
DATE

MOLZEN-CORBIN
STANLEY CONSULTANTS
A JOINT VENTURE

3/4"=1'-0"
0 1' 2' 3'
GRAPHIC SCALE

CITY OF ALBUQUERQUE, NEW MEXICO
SOLIDS HANDLING FACILITIES
PHASE II B-3, CONTRACT 1

INTERIM SLUDGE DEWATERING FACILITIES
DEWATERING BUILDING
DETAILS

M-C NO. 832221
A-10
43 OF 112
SC NO.

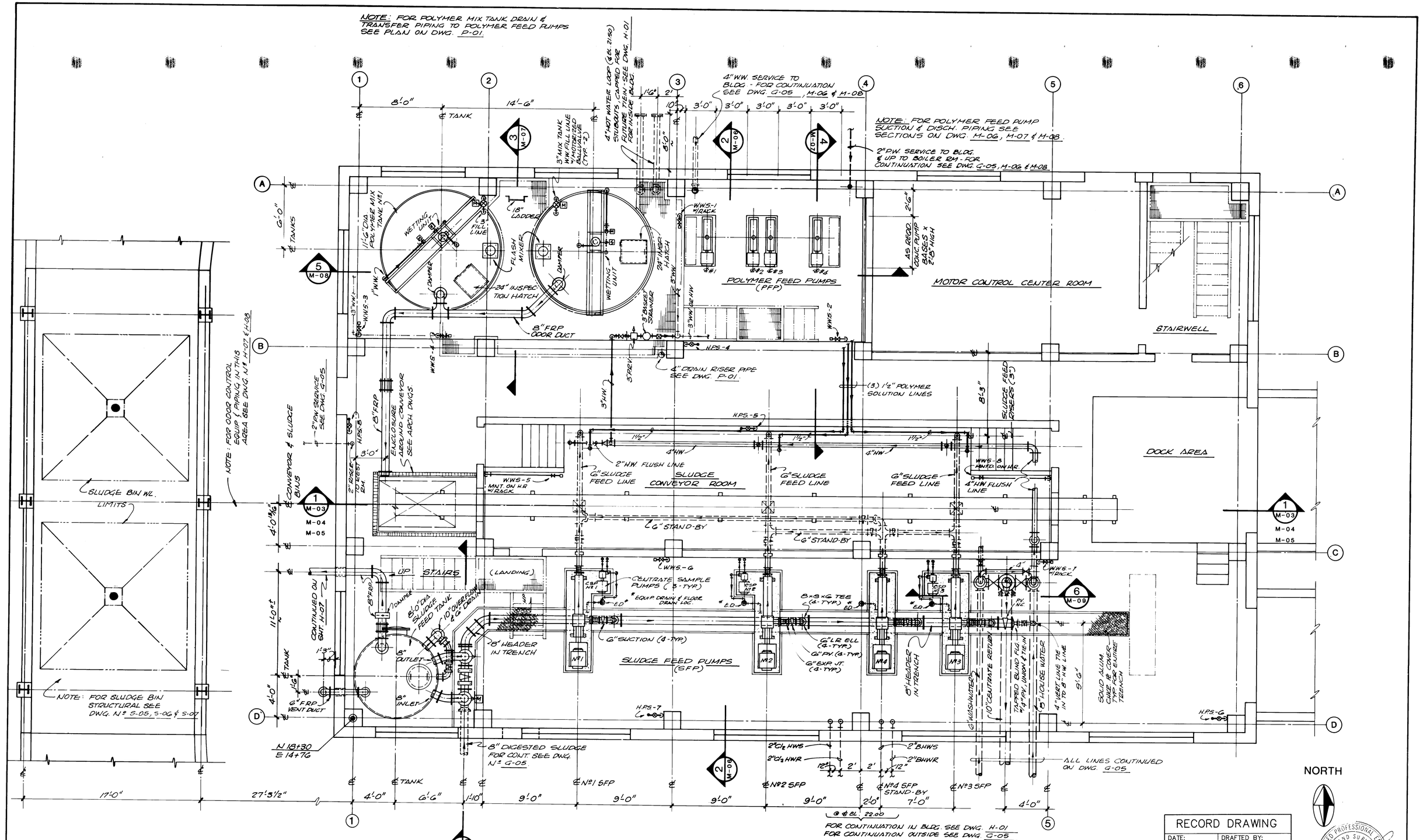

EQUIPMENT GROUND FLOOR - PLAN
1/4" = 1'-0"

RECORD DRAWING	
DATE: AUG. 1988	DRAFTED BY: MCA

THESE RECORD DRAWINGS HAVE BEEN PREPARED, IN PART, ON THE BASIS OF INFORMATION COMPILED AND FURNISHED BY OTHERS. THE ENGINEER WILL NOT BE RESPONSIBLE FOR ANY ERRORS OR OMISSIONS WHICH HAVE BEEN INCORPORATED INTO THIS DOCUMENT AS A RESULT.

REGISTERED PROFESSIONAL ENGINEER AND LAND SURVEYOR 1809 NEW MEXICO DALTON F. MOLZEN

NO.	DATE	REVISIONS	APPROVED

DESIGNED LMR G.S.
DRAWN SPINELLO
CHECKED LMR
APPROVED
APPROVED
DATE

MOLZEN-CORBIN
STANLEY CONSULTANTS
A JOINT VENTURE

1/4" = 1'-0"
0 4' 6' 8'
GRAPHIC SCALE

CITY OF ALBUQUERQUE, NEW MEXICO
SOLIDS HANDLING FACILITIES
PHASE II B-3, CONTRACT 1

INTERIM SLUDGE DEWATERING FACILITIES
DEWATERING BUILDING
PROCESS EQUIPMENT AND PIPING-
GROUND FLOOR PLAN

M-C NO. 832221
M-01
44 of 112
SC NO.

26 | 3 6 9 4 4 4 8 8

CHANGE ORDER NOTES:

1. SEAL EXIST. OPENINGS THRU FLOOR SLAB W/ REMOVABLE MECHANICAL EXPANDING TYPE RUBBER SEAL PIPE PLUGS, 4 REQ'D., VERIFY (4" ø) SIZES IN FIELD.
2. SEAL ALL PENETRATIONS THRU FLOOR SLAB, BY APPLYING A SILICONE SEALANT IN THE SPACE BETWEEN THE FLOOR SLEEVE & PIPE. SEALANT NEED NOT BE MORE THAN 1" THK. BACKED W/ BACKER ROD MATRL. OR APPROVED EQUAL.
3. PROVIDE HEAVY DUTY WET/DRY VACUUM UNIT:
   MINIMUM SPEC:
   20 GAL. CAP.
   2.5 H.P. MOTOR
   12' LG x 1 1/2" HOSE & ALL APURT.
4. INSTALL 9 1/16" ø ORIFICE BETWEEN 3" FLUSH WATER FLANGES (3 LOCATIONS).

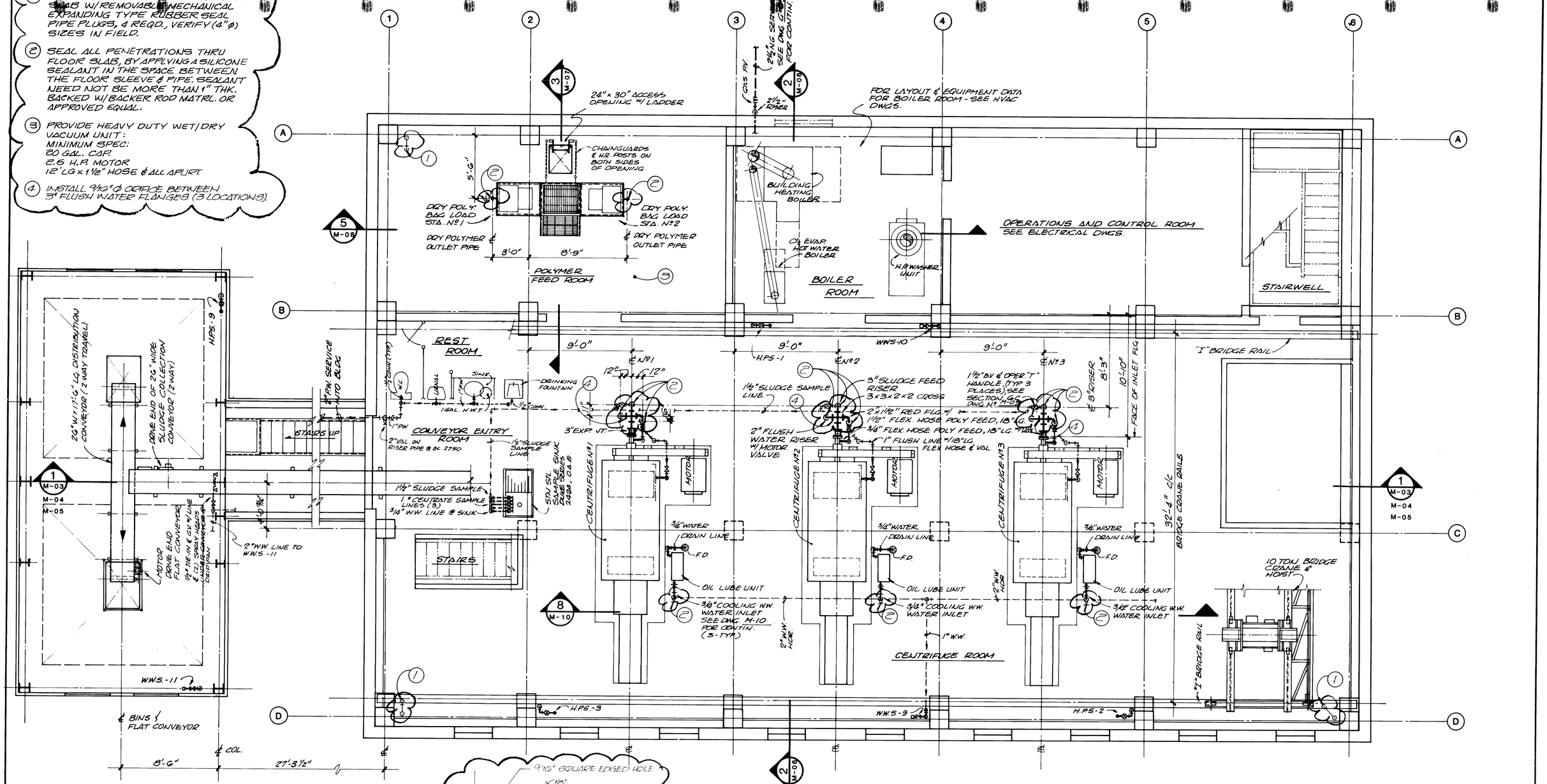

NOTE: FOR SLUDGE BIN STRUCTURE SEE DWG. S-05 & S-06 & S-07

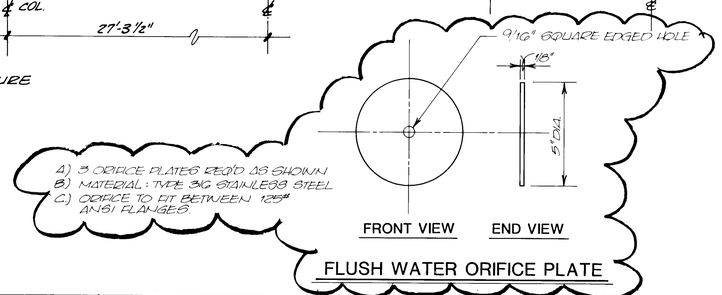

FLUSH WATER ORIFICE PLATE

OPERATIONS & CONTROL SECOND FLOOR - PLAN

1/4" = 1'-0"

NORTH

RECORD DRAWING

DATE:	DRAFTED BY:
AUG. 1988	MCA

THESE RECORD DRAWINGS HAVE BEEN PREPARED, IN PART, ON THE BASIS OF INFORMATION COMPILED AND FURNISHED BY OTHERS. THE ENGINEER WILL NOT BE RESPONSIBLE FOR ANY ERRORS OR OMISSIONS WHICH HAVE BEEN INCORPORATED INTO THIS DOCUMENT AS A RESULT.

REGISTERED PROFESSIONAL ENGINEER — LAND SURVEYOR — No. 1809 — NEW MEXICO — DIXON F. MOLZEN

26 3694458 8

NO.	DATE	REVISIONS	APPROVED

DESIGNED LMR GS
DRAWN SPINELLO
CHECKED LMR
APPROVED
APPROVED
DATE

MOLZEN-CORBIN
STANLEY CONSULTANTS
A JOINT VENTURE

1/4" = 1'-0"
0 4' 6' 8'
GRAPHIC SCALE

CITY OF ALBUQUERQUE, NEW MEXICO
SOLIDS HANDLING FACILITIES
PHASE II B-3, CONTRACT 1

INTERIM SLUDGE DEWATERING FACILITIES
DEWATERING BUILDING
PROCESS EQUIPMENT AND PIPING-
SECOND FLOOR PLAN

M-C NO. 832221
M-02
45 OF 112
SC NO.

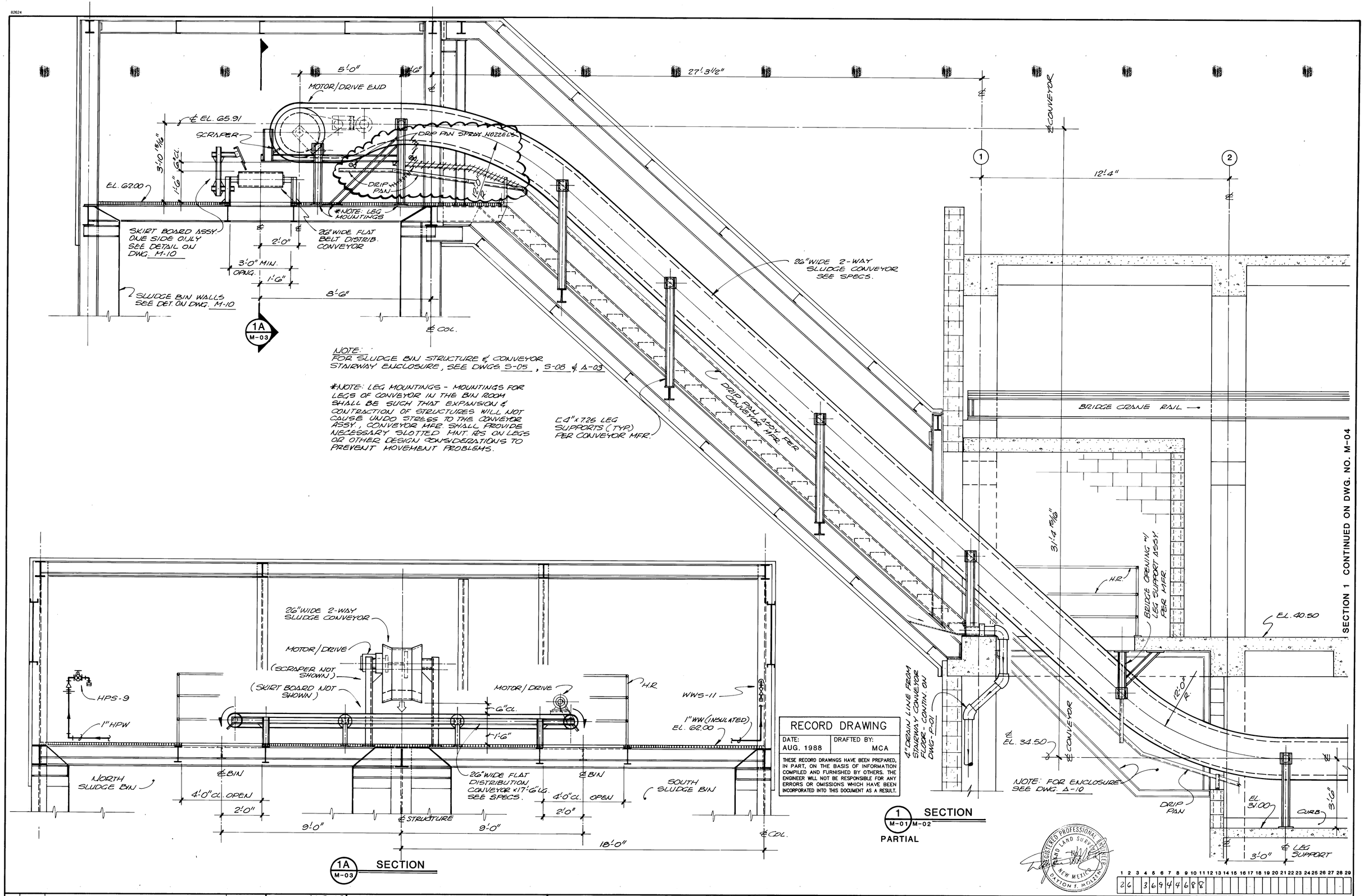

RECORD DRAWING

DATE: AUG. 1988	DRAFTED BY: MCA

THESE RECORD DRAWINGS HAVE BEEN PREPARED, IN PART, ON THE BASIS OF INFORMATION COMPILED AND FURNISHED BY OTHERS. THE ENGINEER WILL NOT BE RESPONSIBLE FOR ANY ERRORS OR OMISSIONS WHICH HAVE BEEN INCORPORATED INTO THIS DOCUMENT AS A RESULT.

SECTION 1 CONTINUED ON DWG. NO. M-04

NO.	DATE	REVISIONS	APPROVED

DESIGNED LMR GS
DRAWN SPINELLO
CHECKED LMR
APPROVED
APPROVED
DATE

MOLZEN-CORBIN
STANLEY CONSULTANTS
A JOINT VENTURE

1/2" = 1'-0"
0 1' 2' 3' 4'
GRAPHIC SCALE

CITY OF ALBUQUERQUE, NEW MEXICO
SOLIDS HANDLING FACILITIES
PHASE II B-3, CONTRACT 1

INTERIM SLUDGE DEWATERING FACILITIES
DEWATERING BUILDING
PROCESS EQUIPMENT - SECTIONS

M-C NO. 832221
M-03
46 of 112
SC NO.

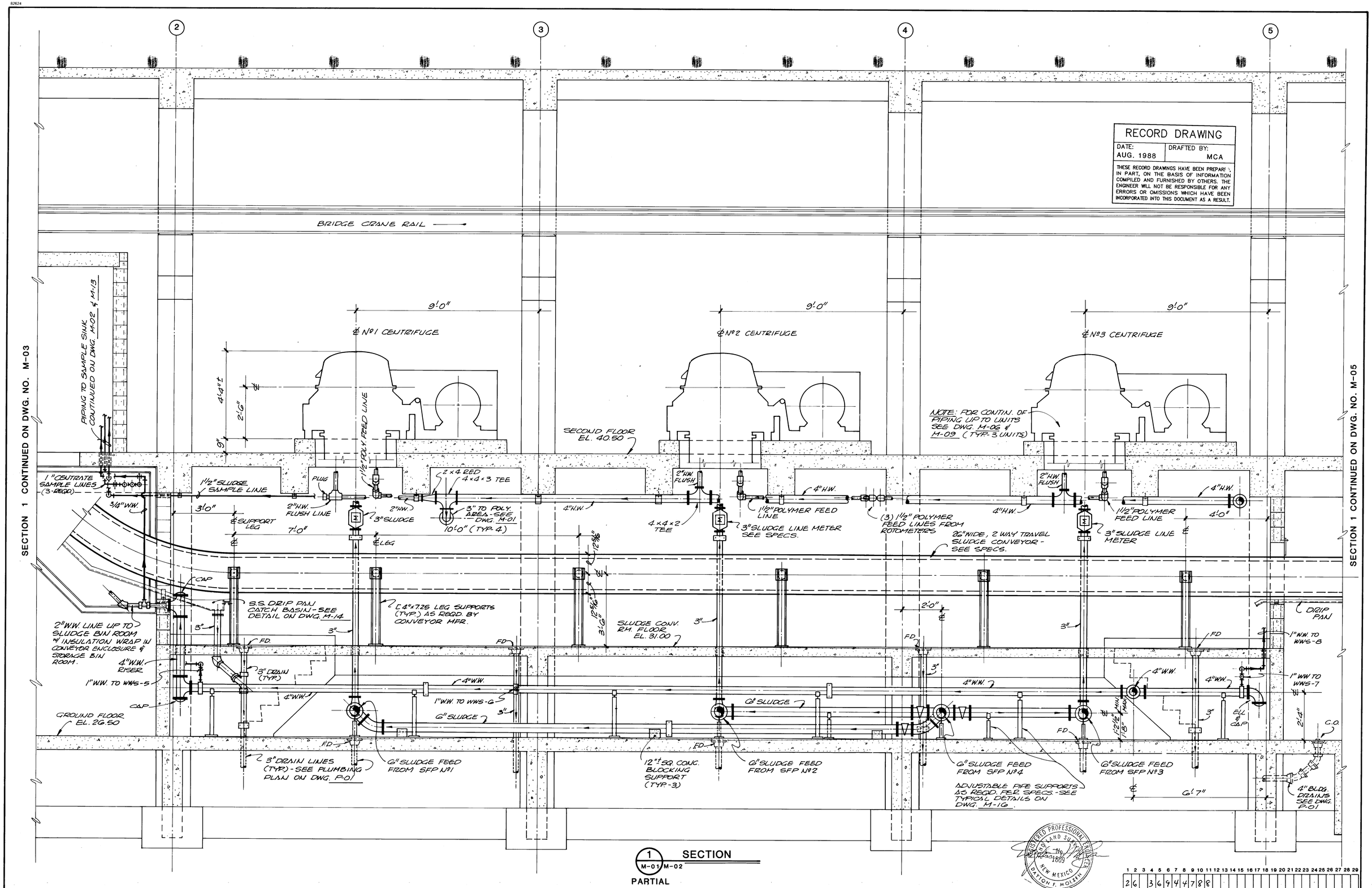

NO.	DATE	REVISIONS	APPROVED

DESIGNED LMR, GS
DRAWN SPINELLO
CHECKED LMR
APPROVED
APPROVED
DATE

MOLZEN-CORBIN
STANLEY CONSULTANTS
A JOINT VENTURE

1/2" = 1'-0"
0 1' 2' 3' 4'
GRAPHIC SCALE

CITY OF ALBUQUERQUE, NEW MEXICO
SOLIDS HANDLING FACILITIES
PHASE II B-3, CONTRACT 1

INTERIM SLUDGE DEWATERING FACILITIES
DEWATERING BUILDING
PROCESS, EQUIPMENT - SECTION

M-C NO. 832221
M-04
47 of 112
SC NO.

82624

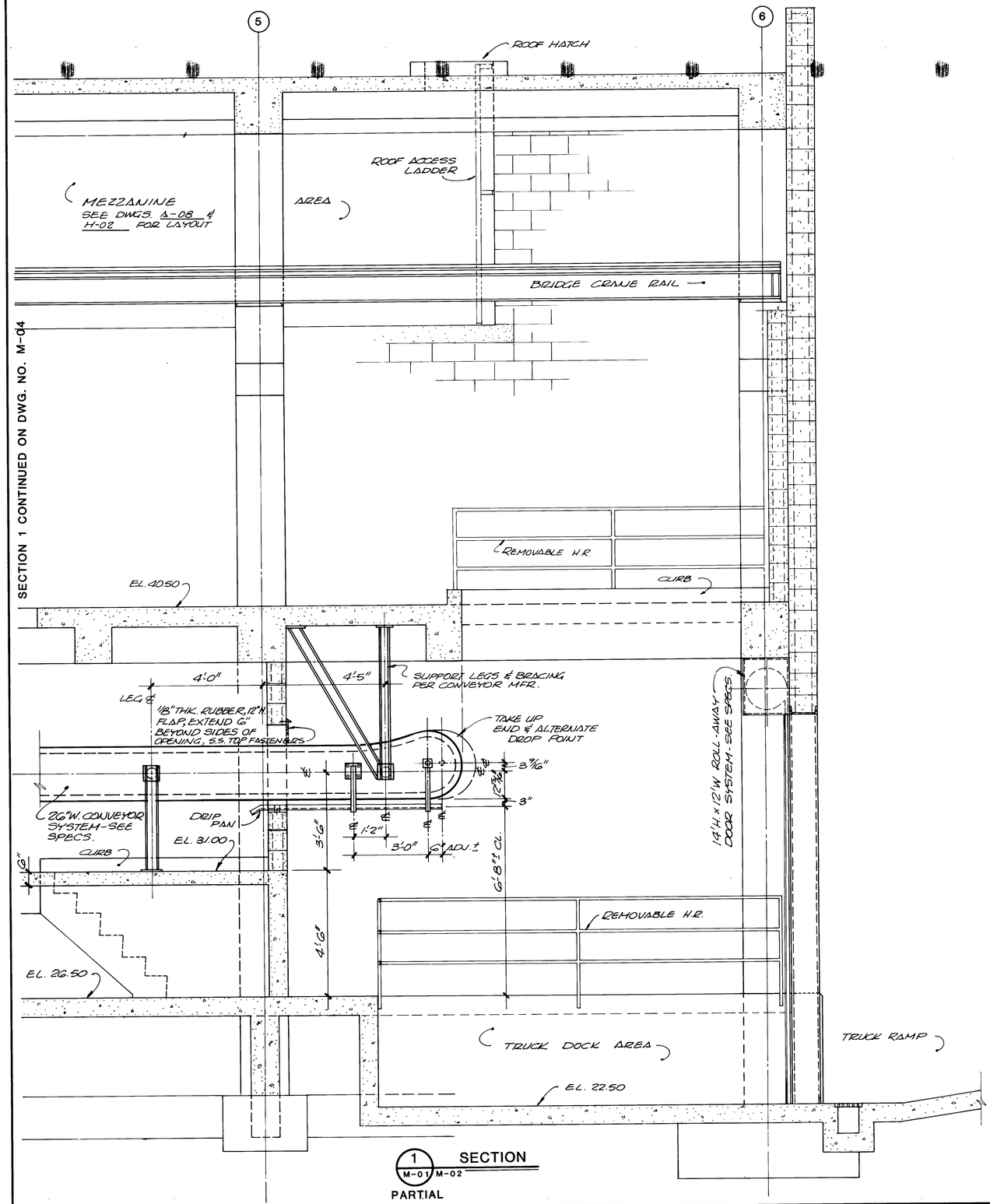

1 M-01 M-02 SECTION

PARTIAL

RECORD DRAWING	
DATE: AUG. 1988	DRAFTED BY: MCA

THESE RECORD DRAWINGS HAVE BEEN PREPARED, IN PART, ON THE BASIS OF INFORMATION COMPILED AND FURNISHED BY OTHERS. THE ENGINEER WILL NOT BE RESPONSIBLE FOR ANY ERRORS OR OMISSIONS WHICH HAVE BEEN INCORPORATED INTO THIS DOCUMENT AS A RESULT.

REGISTERED PROFESSIONAL ENGINEER AND LAND SURVEYOR NEW MEXICO DAYTON F. MOLZEN

1 2 3 4 5 6 7 8 9 10 11 12 13 14 15 16 17 18 19 20 21 22 23 24 25 26 27 28 29

2 6 3 6 9 4 4 8 8 8

NO.	DATE	REVISIONS	APPROVED

DESIGNED LMR GS
DRAWN SPINELLO
CHECKED LMR
APPROVED
APPROVED
DATE

MOLZEN-CORBIN
STANLEY CONSULTANTS
A JOINT VENTURE

1/2" = 1'-0"
0 1' 2' 3' 4'
GRAPHIC SCALE

CITY OF ALBUQUERQUE, NEW MEXICO
SOLIDS HANDLING FACILITIES
PHASE II B-3, CONTRACT 1

INTERIM SLUDGE DEWATERING FACILITIES
DEWATERING BUILDING
PROCESS EQUIPMENT - SECTION

M-C NO. 832221
M-05
48 of 112
SC NO.

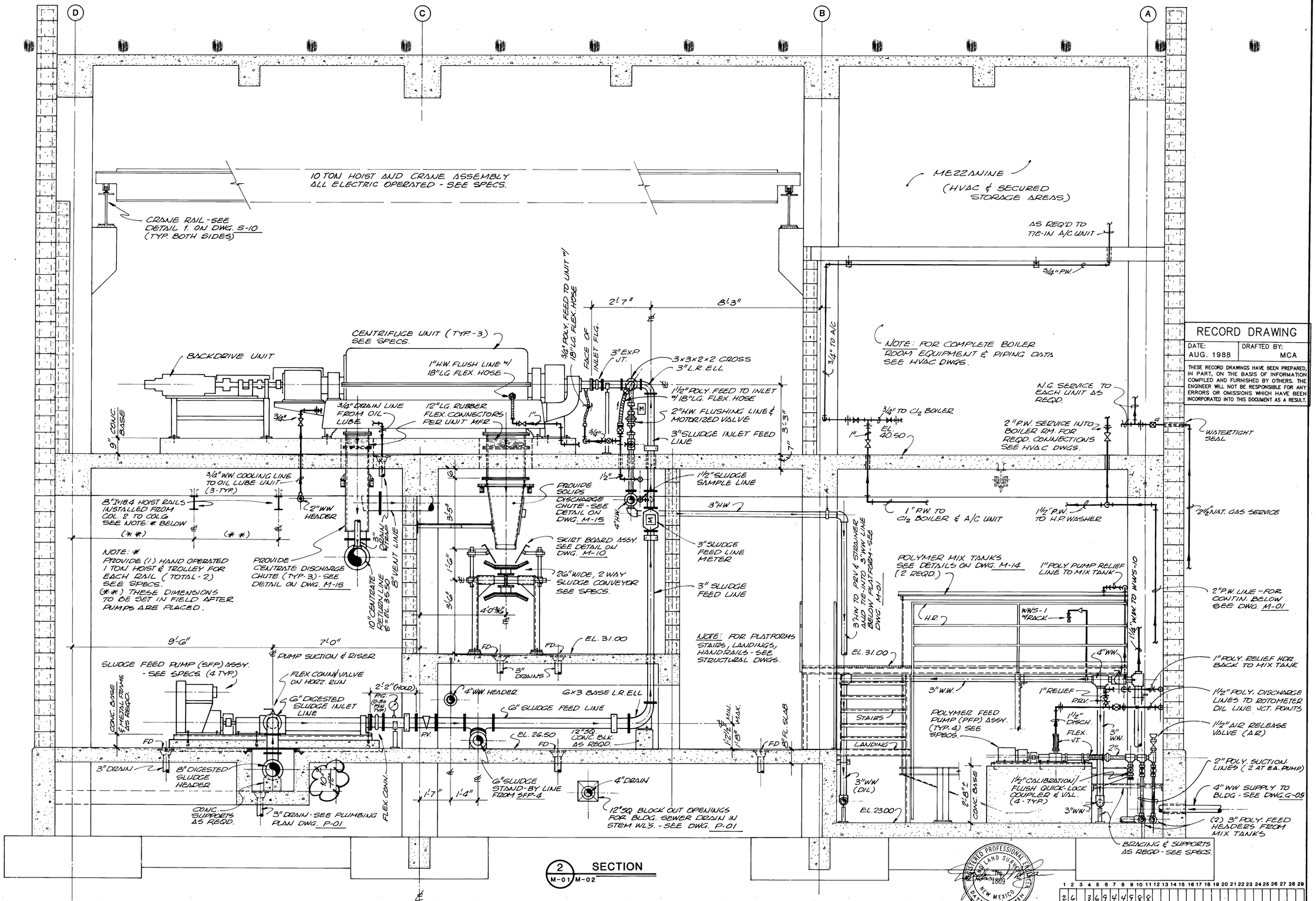

RECORD DRAWING

DATE:	DRAFTED BY:
AUG. 1988	MCA

THESE RECORD DRAWINGS HAVE BEEN PREPARED, IN PART, ON THE BASIS OF INFORMATION COMPILED AND FURNISHED BY OTHERS. THE ENGINEER WILL NOT BE RESPONSIBLE FOR ANY ERRORS OR OMISSIONS WHICH HAVE BEEN INCORPORATED INTO THIS DOCUMENT AS A RESULT.

REGISTERED PROFESSIONAL ENGINEER & LAND SURVEYOR 1809 NEW MEXICO DAYTON L. MOLZEN

1 2 3 4 5 6 7 8 9 10 11 12 13 14 15 16 17 18 19 20 21 22 23 24 25 26 27 28 29

2 6 3 6 9 4 4 9 8 8

NO.	DATE	REVISIONS	APPROVED

DESIGNED LMR G'S
DRAWN SPINELLO
CHECKED LMR
APPROVED
APPROVED
DATE

MOLZEN-CORBIN
STANLEY CONSULTANTS
A JOINT VENTURE

1/2" = 1'-0"
0 1' 2' 3' 4'
GRAPHIC SCALE

CITY OF ALBUQUERQUE, NEW MEXICO
SOLIDS HANDLING FACILITIES
PHASE II B-3, CONTRACT 1

INTERIM SLUDGE DEWATERING FACILITIES
DEWATERING BUILDING
PROCESS EQUIPMENT – SECTION

M-C NO. 832221
M-06
49 of 112
SC NO.

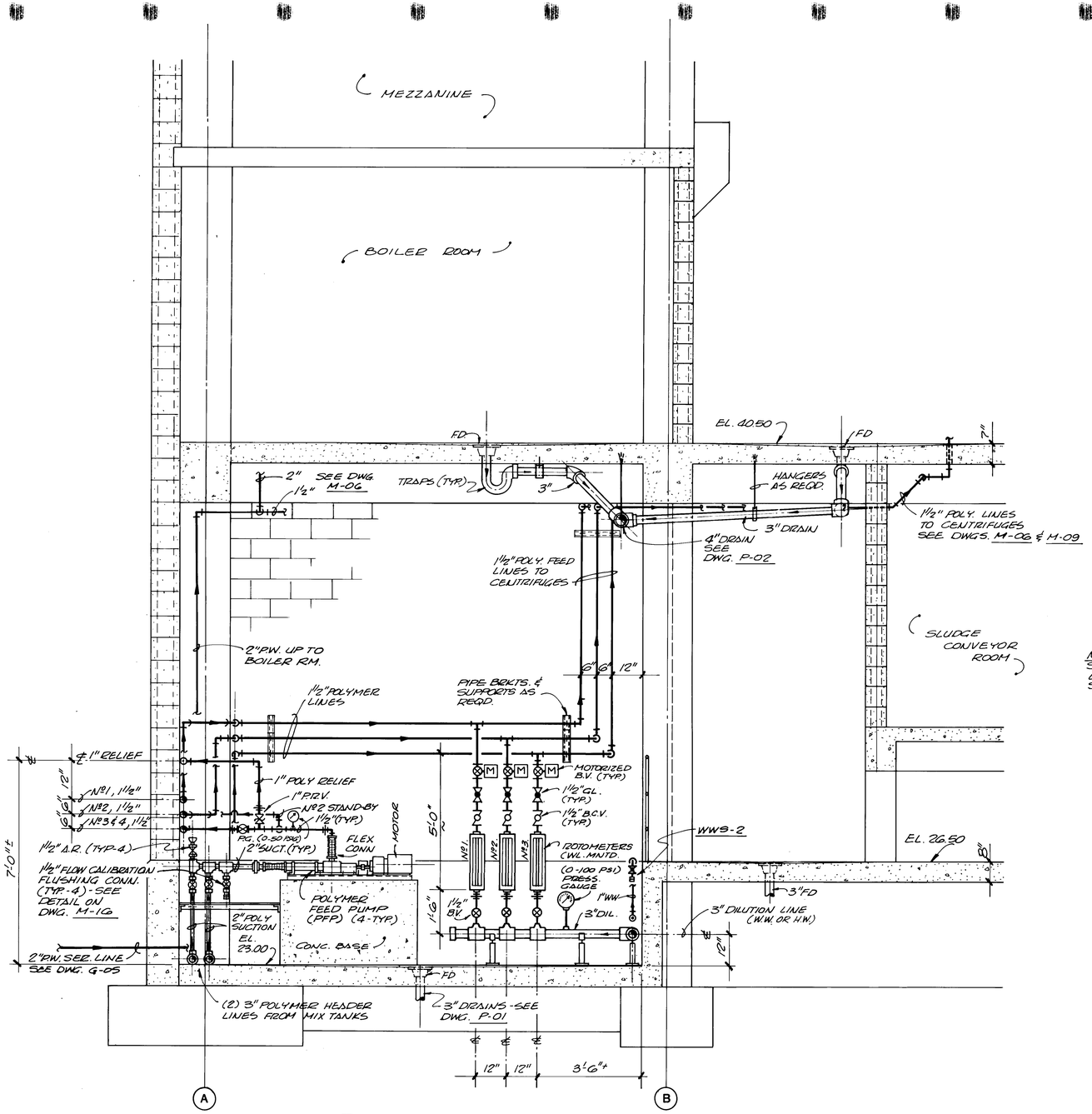

4 M-01 SECTION

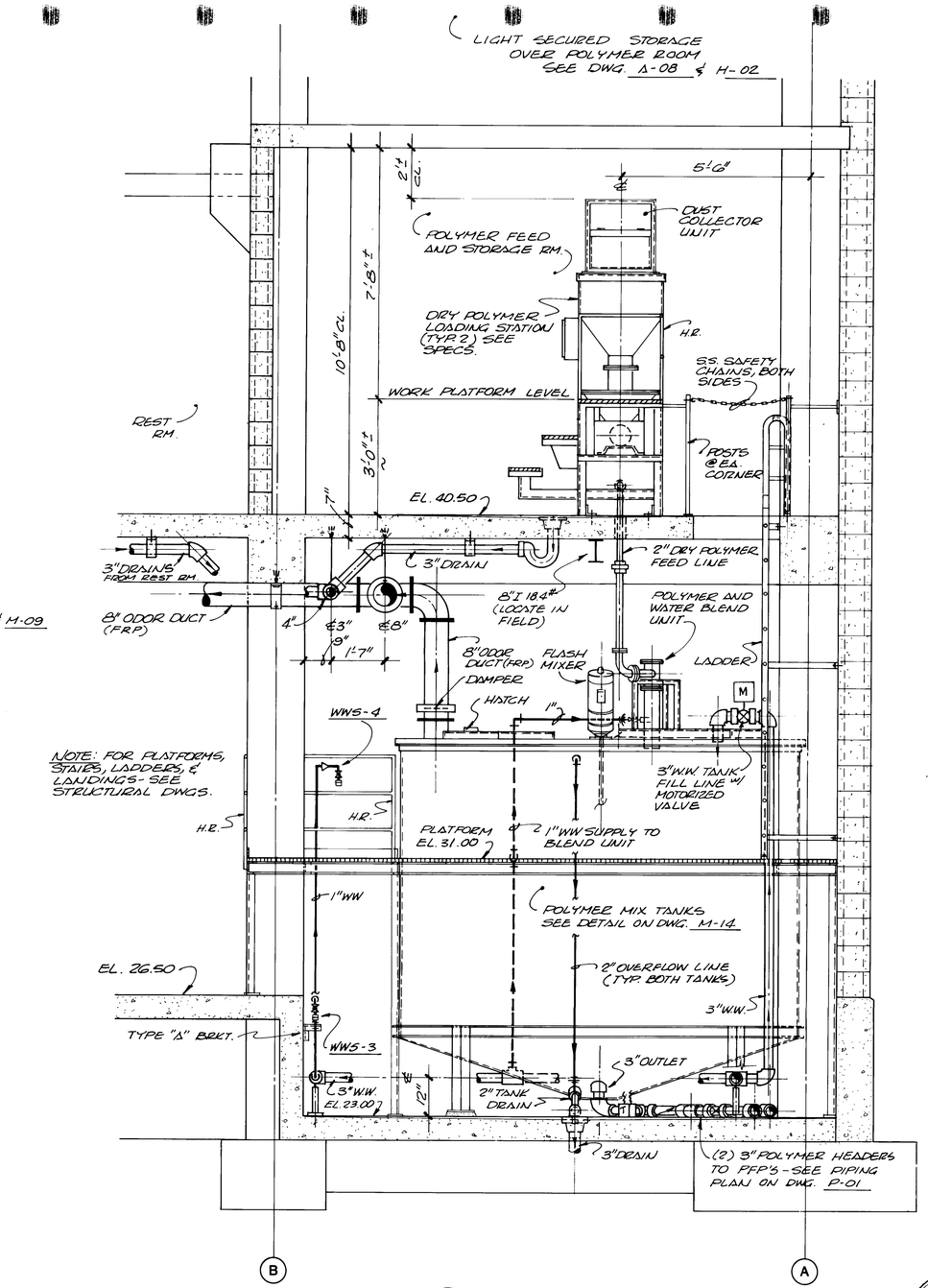

3 M-02 M-01 SECTION

RECORD DRAWING	
DATE: AUG. 1988	DRAFTED BY: MCA

THESE RECORD DRAWINGS HAVE BEEN PREPARED, IN PART, ON THE BASIS OF INFORMATION COMPILED AND FURNISHED BY OTHERS. THE ENGINEER WILL NOT BE RESPONSIBLE FOR ANY ERRORS OR OMISSIONS WHICH HAVE BEEN INCORPORATED INTO THIS DOCUMENT AS A RESULT.

REGISTERED PROFESSIONAL ENGINEER AND LAND SURVEYOR No. 1809 NEW MEXICO DAXTON F. MOLZEN

1 2 3 4 5 6 7 8 9 10 11 12 13 14 15 16 17 18 19 20 21 22 23 24 25 26 27 28 29
2 6 3 6 9 4 5 0 8 8

NO.	DATE	REVISIONS	APPROVED

DESIGNED LMR C.S.
DRAWN SPINELLO
CHECKED LMR
APPROVED
APPROVED
DATE

MOLZEN-CORBIN
STANLEY CONSULTANTS
A JOINT VENTURE

1/2"=1'-0"
0 1' 2' 3' 4'
GRAPHIC SCALE

CITY OF ALBUQUERQUE, NEW MEXICO
SOLIDS HANDLING FACILITIES
PHASE II B-3, CONTRACT 1

INTERIM SLUDGE DEWATERING FACILITIES
DEWATERING BUILDING
PROCESS EQUIPMENT - SECTIONS

M-C NO. 832221
M-07
50 of 112
SC NO.

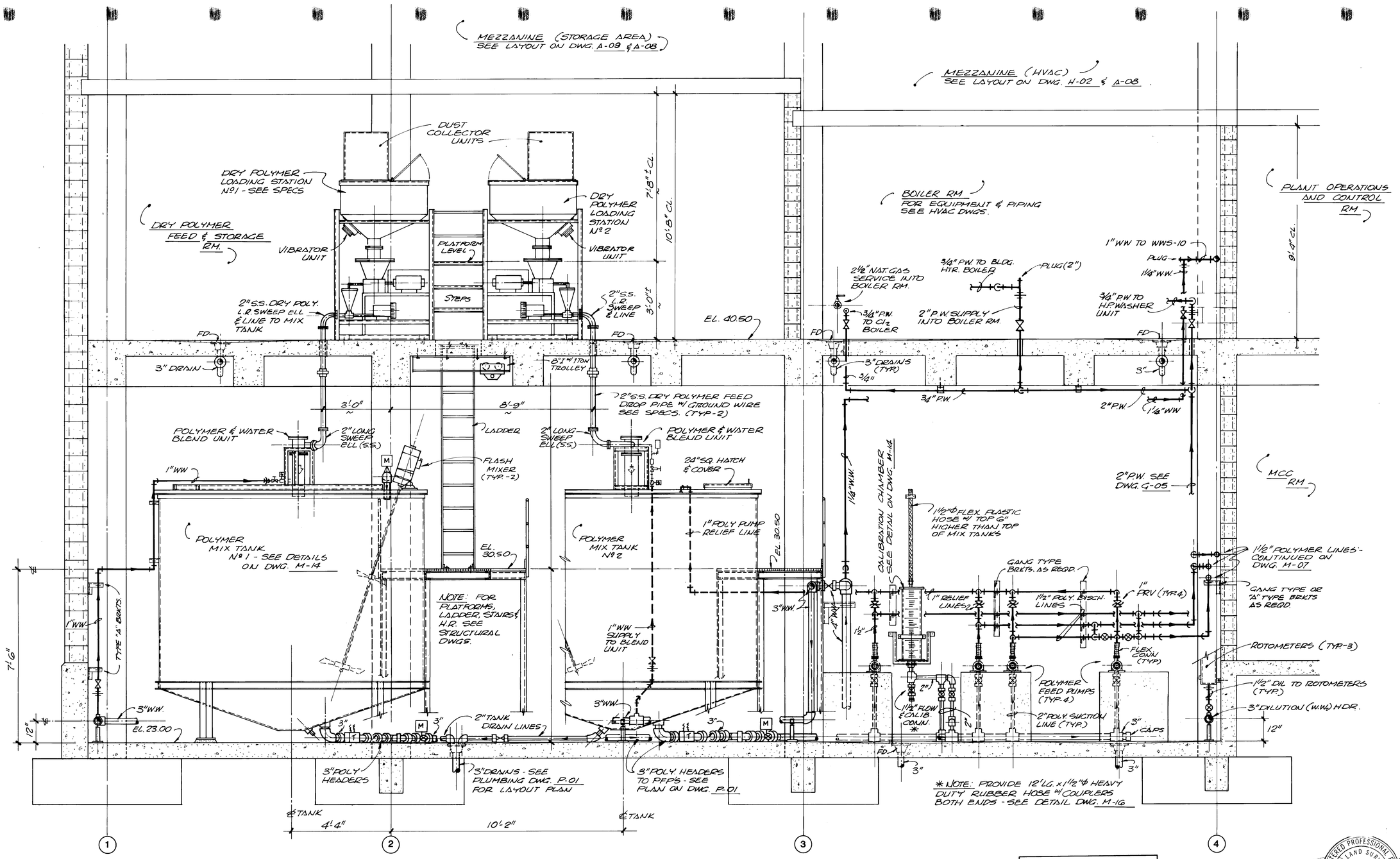

5 / M-01 SECTION

RECORD DRAWING

DATE:	DRAFTED BY:
AUG. 1988	MCA

THESE RECORD DRAWINGS HAVE BEEN PREPARED, IN PART, ON THE BASIS OF INFORMATION COMPILED AND FURNISHED BY OTHERS. THE ENGINEER WILL NOT BE RESPONSIBLE FOR ANY ERRORS OR OMISSIONS WHICH HAVE BEEN INCORPORATED INTO THIS DOCUMENT AS A RESULT.

1 2 3 4 5 6 7 8 9 10 11 12 13 14 15 16 17 18 19 20 21 22 23 24 25 26 27 28 29
C6 3 6 9 4 5 1 8 8

REGISTERED PROFESSIONAL ENGINEER AND LAND SURVEYOR No. 1809 NEW MEXICO DAYTON F. MOLZEN

NO.	DATE	REVISIONS	APPROVED

DESIGNED LMR G.S.
DRAWN SPINELLO
CHECKED LMR
APPROVED
APPROVED
DATE

MOLZEN-CORBIN
STANLEY CONSULTANTS
A JOINT VENTURE

1/2" = 1'-0"
0 1' 2' 3' 4'
GRAPHIC SCALE

CITY OF ALBUQUERQUE, NEW MEXICO
SOLIDS HANDLING FACILITIES
PHASE II B-3, CONTRACT 1

INTERIM SLUDGE DEWATERING FACILITIES
DEWATERING BUILDING
PROCESS EQUIPMENT - SECTION

M-C NO. 832221
M-08
51 OF 112
SC NO.

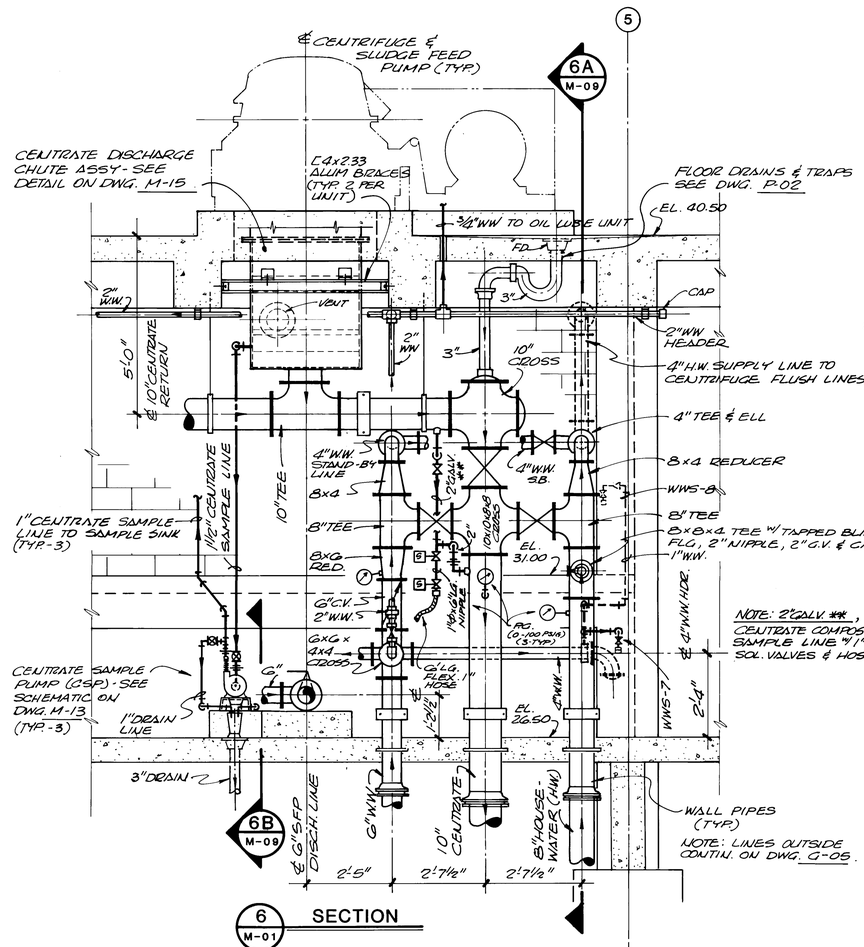

6 SECTION M-01

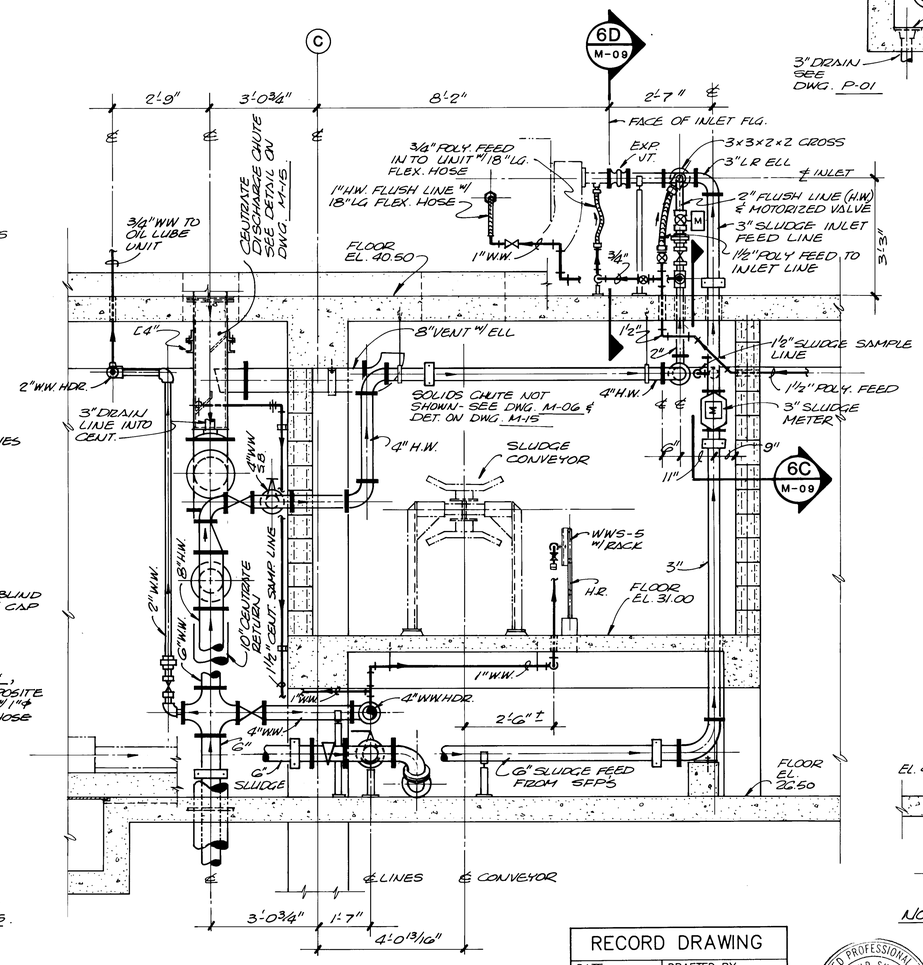

6A SECTION M-09

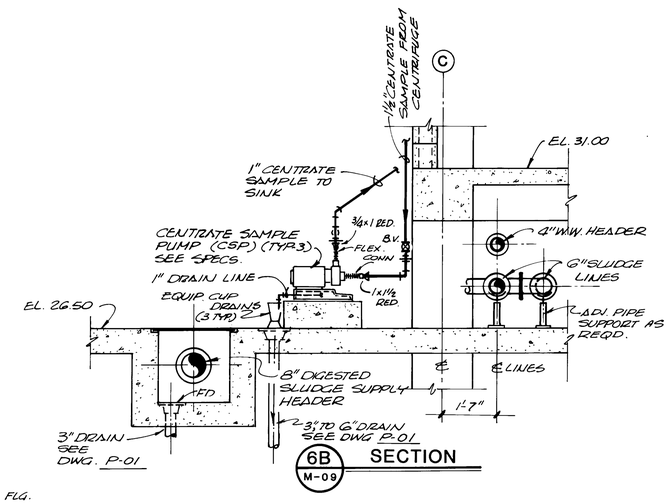

6B SECTION M-09

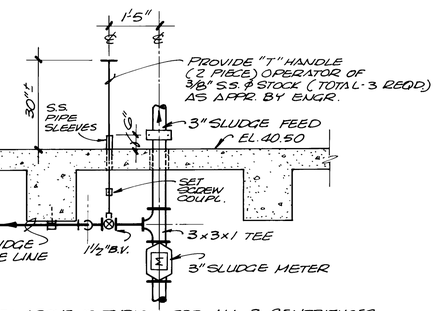

NOTE: ABOVE IS TYPICAL FOR ALL 3 CENTRIFUGES

6C SECTION M-09

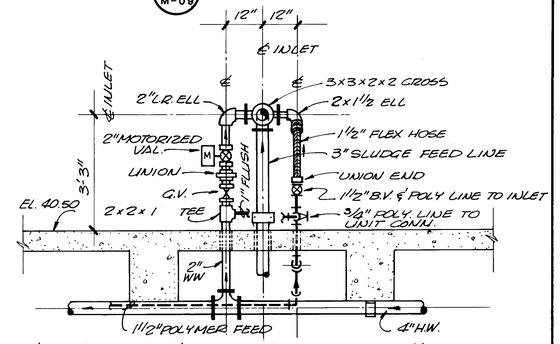

NOTE: ABOVE IS TYPICAL FOR ALL 3 CENTRIFUGES

6D SECTION M-09

RECORD DRAWING	
DATE: AUG. 1988	DRAFTED BY: MCA

THESE RECORD DRAWINGS HAVE BEEN PREPARED, IN PART, ON THE BASIS OF INFORMATION COMPILED AND FURNISHED BY OTHERS. THE ENGINEER WILL NOT BE RESPONSIBLE FOR ANY ERRORS OR OMISSIONS WHICH HAVE BEEN INCORPORATED INTO THIS DOCUMENT AS A RESULT.

REGISTERED PROFESSIONAL ENGINEER AND LAND SURVEYOR No. 1809 NEW MEXICO DAYTON F. MOLNAR

1 2 3 4 5 6 7 8 9 10 11 12 13 14 15 16 17 18 19 20 21 22 23 24 25 26 27 28 29
2 6 3 6 9 4 5 2 8 8

NO.	DATE	REVISIONS	APPROVED

DESIGNED LMR G.S.
DRAWN SPINELLO
CHECKED LMR
APPROVED
APPROVED
DATE

MOLZEN-CORBIN
STANLEY CONSULTANTS
A JOINT VENTURE

1/2" = 1'-0"
0 1' 2' 3' 4'
GRAPHIC SCALE

CITY OF ALBUQUERQUE, NEW MEXICO
SOLIDS HANDLING FACILITIES
PHASE II B-3, CONTRACT 1

INTERIM SLUDGE DEWATERING FACILITIES
DEWATERING BUILDING
PROCESS EQUIPMENT – SECTIONS

M-C NO. 832221
M-09
52 of 112
SC NO.

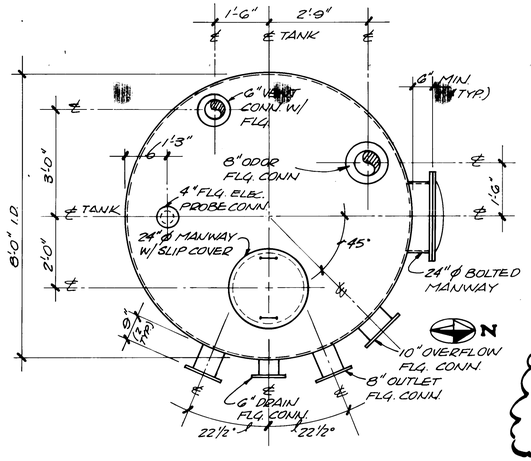

SLUDGE FEED TANK PLAN

1/2" = 1'-0"

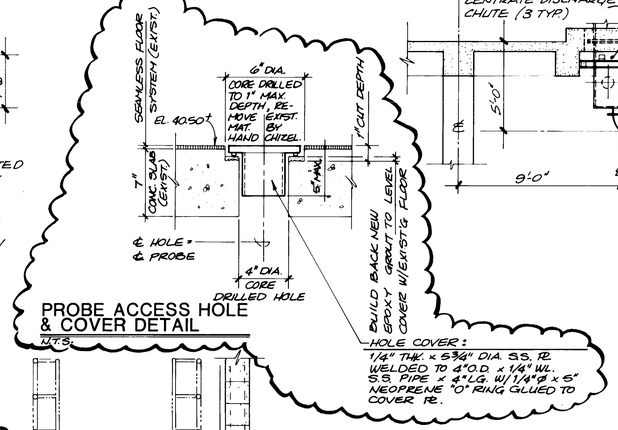

PROBE ACCESS HOLE & COVER DETAIL

N.T.S.

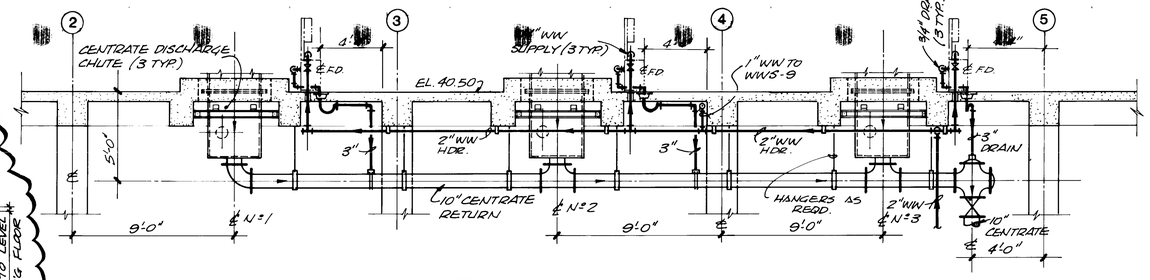

8 / M-02 **SECTION**

1/4" = 1'-0"

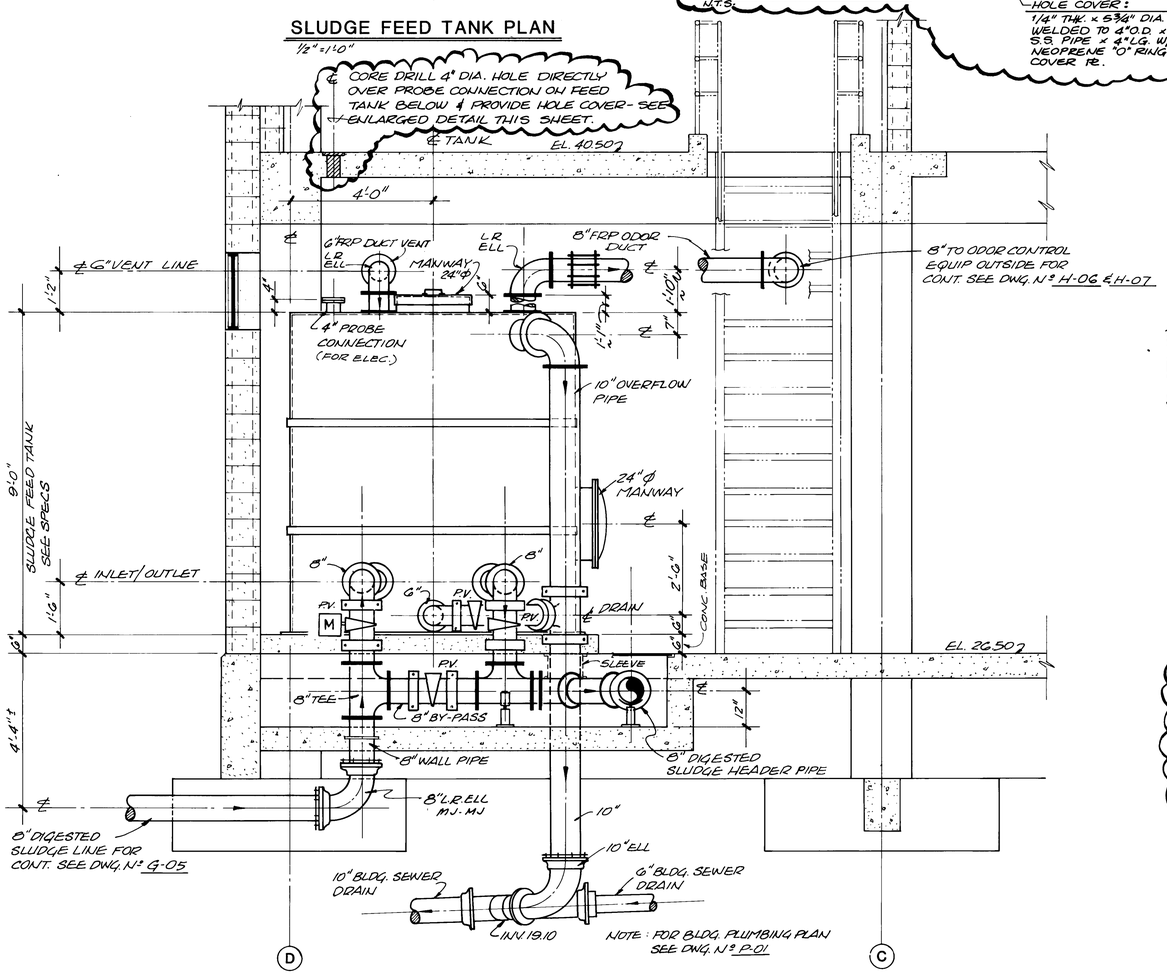

7 / M-01 **SECTION**

1/2" = 1'-0"

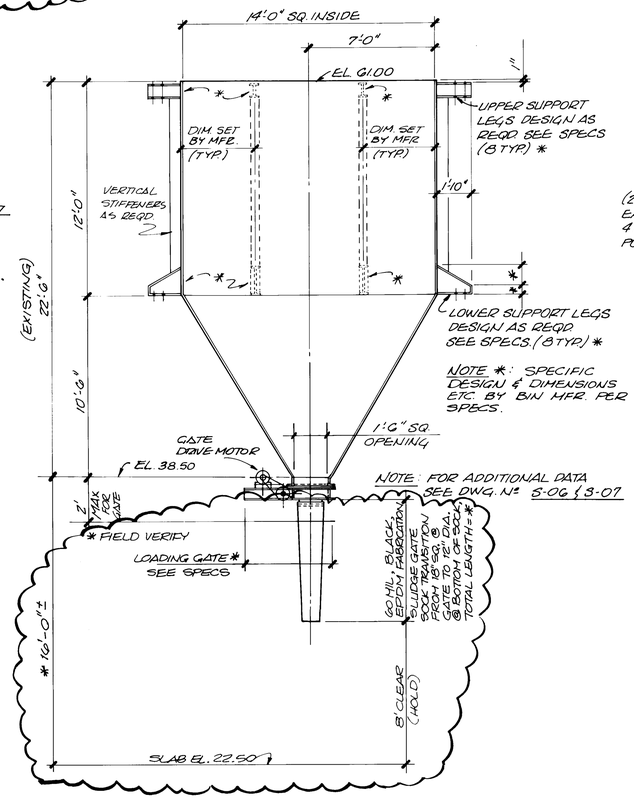

DRY SLUDGE STORAGE BIN DETAIL (2 REQD.)

1/4" = 1'-0"

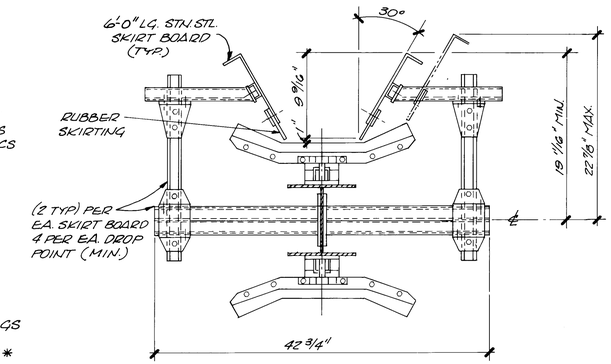

TYPICAL SKIRT BOARD CROSS SECTION DETAIL

N.T.S.

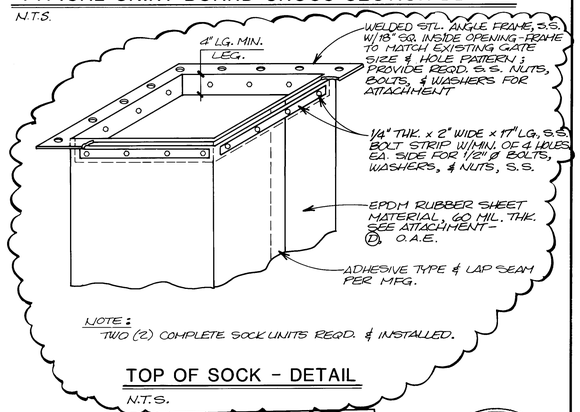

TOP OF SOCK - DETAIL

N.T.S.

RECORD DRAWING

DATE:	DRAFTED BY:
AUG. 1988	MCA

THESE RECORD DRAWINGS HAVE BEEN PREPARED, IN PART, ON THE BASIS OF INFORMATION COMPILED AND FURNISHED BY OTHERS. THE ENGINEER WILL NOT BE RESPONSIBLE FOR ANY ERRORS OR OMISSIONS WHICH HAVE BEEN INCORPORATED INTO THIS DOCUMENT AS A RESULT.

REGISTERED PROFESSIONAL ENGINEER AND LAND SURVEYOR — NEW MEXICO — DAXTON F. MOLZEN

1 2 3 4 5 6 7 8 9 10 11 12 13 14 15 16 17 18 19 20 21 22 23 24 25 26 27 28 29

26 3 6 9 4 5 3 8 8

NO.	DATE	REVISIONS	APPROVED

DESIGNED LMR G.S
DRAWN SPINELLO
CHECKED LMR
APPROVED
APPROVED
DATE

MOLZEN-CORBIN
STANLEY CONSULTANTS
A JOINT VENTURE

1/2" = 1'-0"
0 1' 2' 3' 4'
GRAPHIC SCALE

CITY OF ALBUQUERQUE, NEW MEXICO
SOLIDS HANDLING FACILITIES
PHASE II B-3, CONTRACT 1

INTERIM SLUDGE DEWATERING FACILITIES
DEWATERING BUILDING
PROCESS EQUIPMENT - SECTIONS AND DETAILS

M-C NO. 832221
M-10
53 OF 112
SC NO.

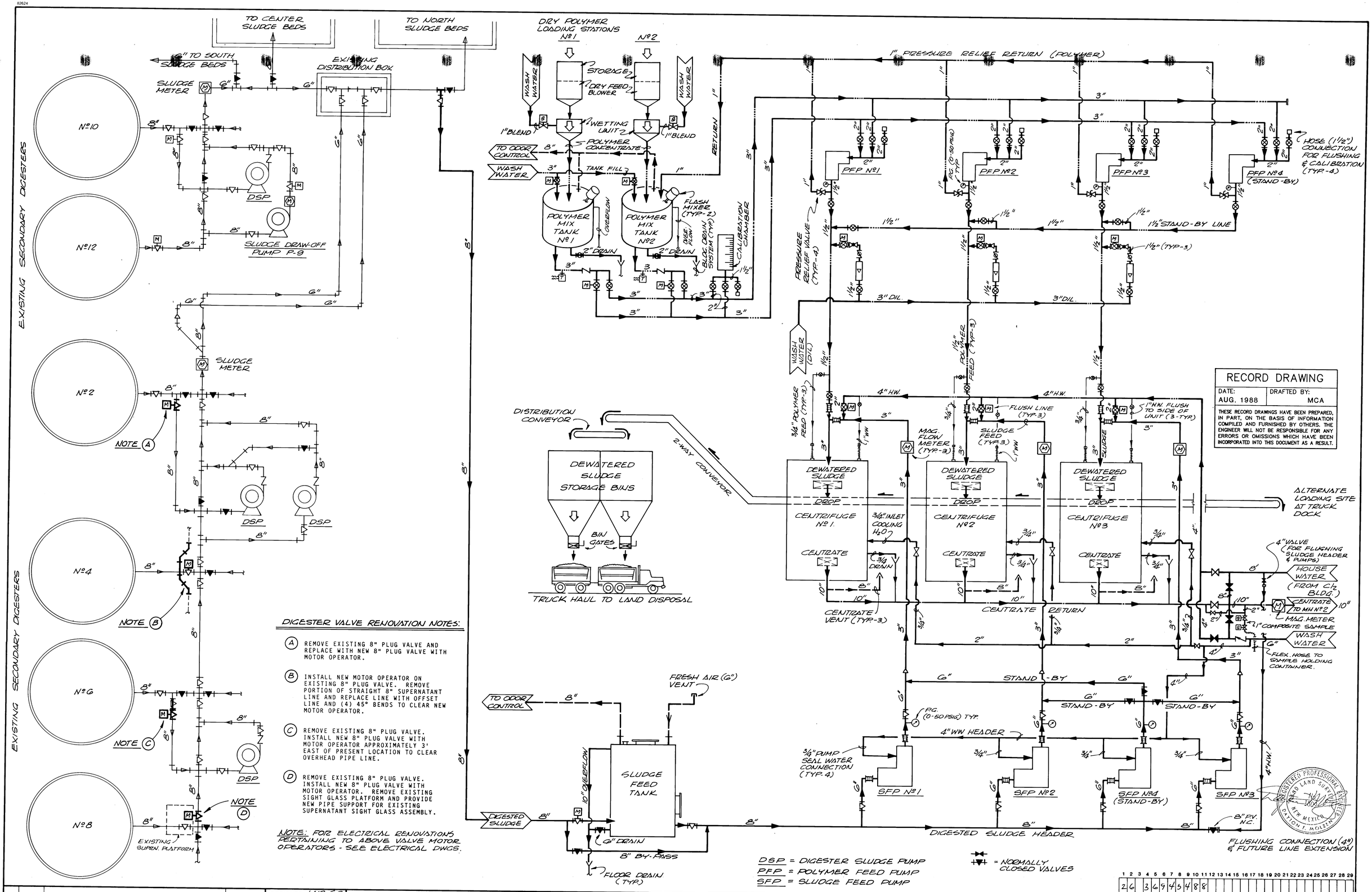

RECORD DRAWING

DATE:	DRAFTED BY:
AUG. 1988	MCA

THESE RECORD DRAWINGS HAVE BEEN PREPARED, IN PART, ON THE BASIS OF INFORMATION COMPILED AND FURNISHED BY OTHERS. THE ENGINEER WILL NOT BE RESPONSIBLE FOR ANY ERRORS OR OMISSIONS WHICH HAVE BEEN INCORPORATED INTO THIS DOCUMENT AS A RESULT.

NO.	DATE	REVISIONS	APPROVED

DESIGNED LMR CJS
DRAWN SPINELLO
CHECKED LMR
APPROVED
APPROVED
DATE

MOLZEN-CORBIN
STANLEY CONSULTANTS
A JOINT VENTURE

NONE
GRAPHIC SCALE

CITY OF ALBUQUERQUE, NEW MEXICO
SOLIDS HANDLING FACILITIES
PHASE II B-3, CONTRACT 1

INTERIM SLUDGE DEWATERING FACILITIES
DEWATERING BUILDING
PROCESS EQUIPMENT SCHEMATIC AND DIGESTER VALVE ROOM – VALVE RENOVATIONS

M-C NO. 832221
M-11
54 of 112
SC NO.

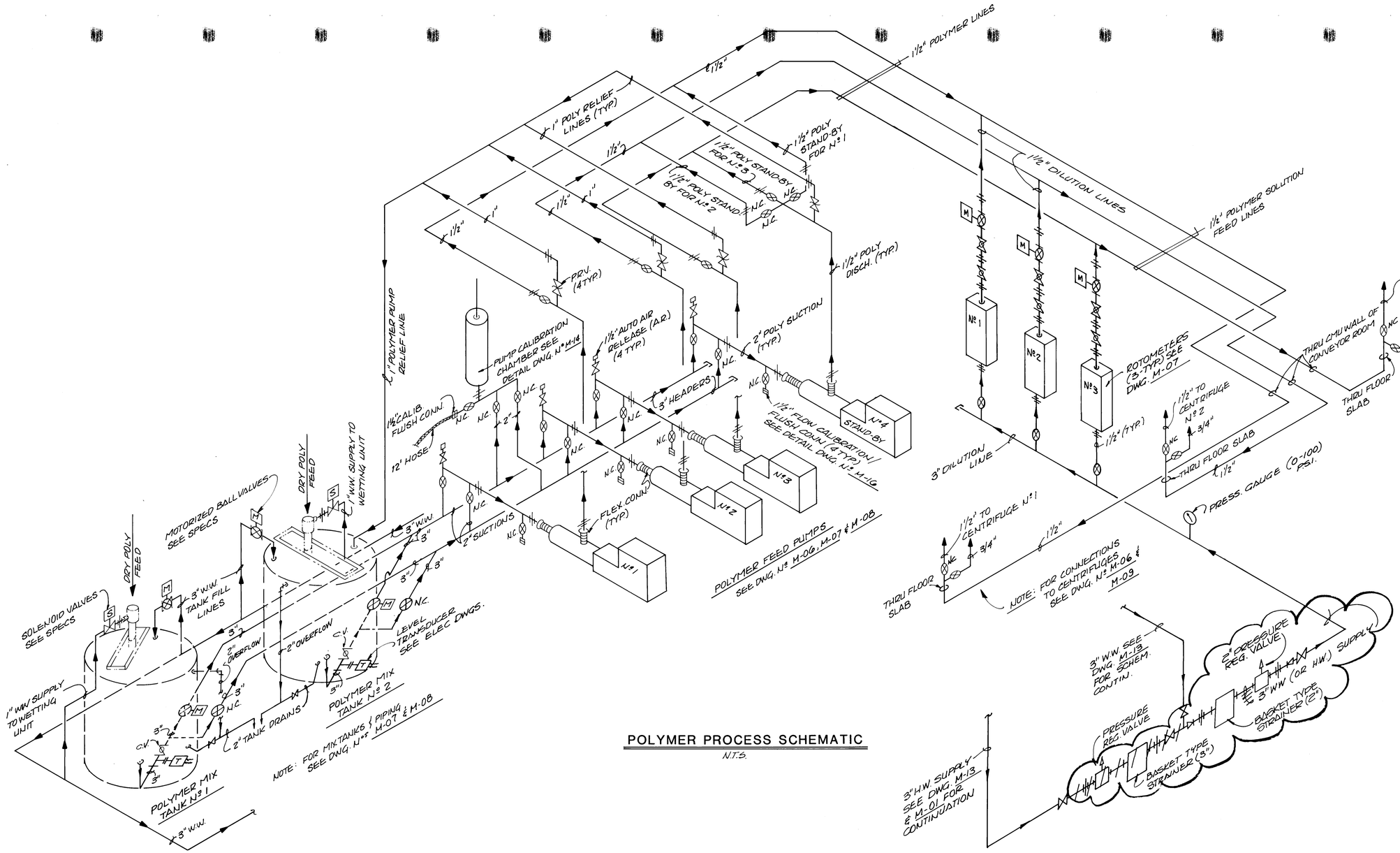

POLYMER PROCESS SCHEMATIC

N.T.S.

RECORD DRAWING

DATE:	DRAFTED BY:
AUG. 1988	MCA

THESE RECORD DRAWINGS HAVE BEEN PREPARED, IN PART, ON THE BASIS OF INFORMATION COMPILED AND FURNISHED BY OTHERS. THE ENGINEER WILL NOT BE RESPONSIBLE FOR ANY ERRORS OR OMISSIONS WHICH HAVE BEEN INCORPORATED INTO THIS DOCUMENT AS A RESULT.

REGISTERED PROFESSIONAL ENGINEER AND LAND SURVEYOR NEW MEXICO DAYTON L. MOLZEN

NO.	DATE	REVISIONS	APPROVED

DESIGNED LHR
DRAWN JM, GS
CHECKED LHR
APPROVED
APPROVED
DATE

MOLZEN-CORBIN
STANLEY CONSULTANTS
A JOINT VENTURE

NONE
GRAPHIC SCALE

CITY OF ALBUQUERQUE, NEW MEXICO
SOLIDS HANDLING FACILITIES
PHASE II B-3, CONTRACT 1

INTERIM SLUDGE DEWATERING FACILITIES
DEWATERING BUILDING
PROCESS EQUIPMENT - POLYMER PROCESS SCHEMATIC

M-C NO. 832221
M-12
55 OF 112
SC NO.

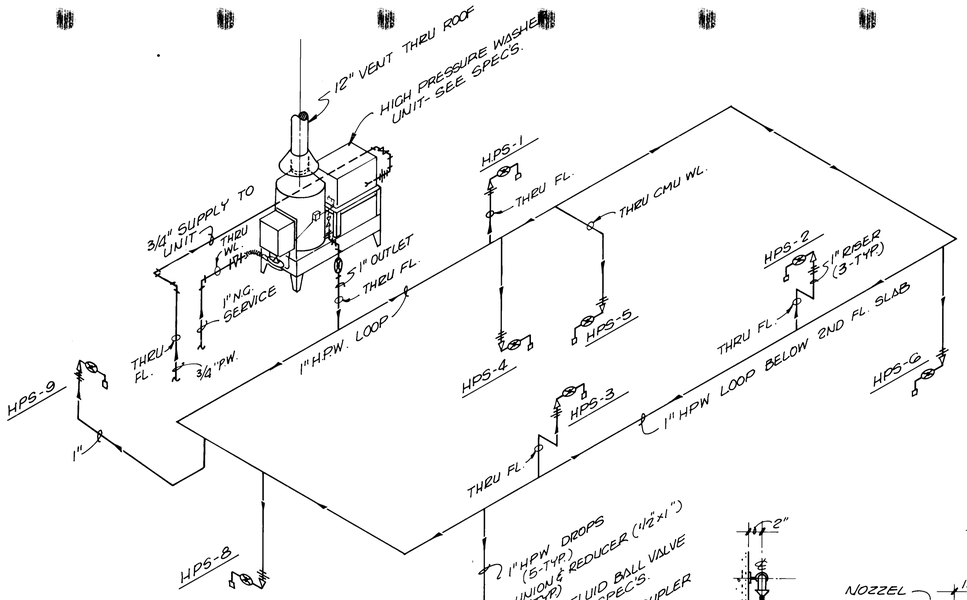

NOTE: ENTIRE HIGH PRESSURE WATER (HPW) SYSTEM TO BE INSULATED PIPING - SEE SPECS.

HIGH PRESSURE HOT WATER SYSTEM - SCHEMATIC

N.T.S.

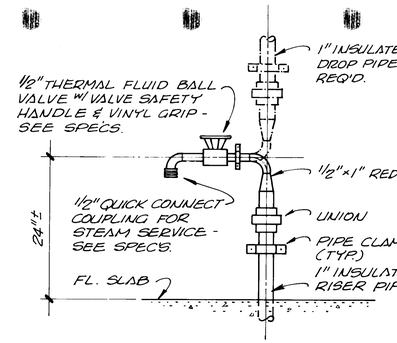

HIGH PRESSURE HOT WATER STATION - DETAIL

N.T.S.

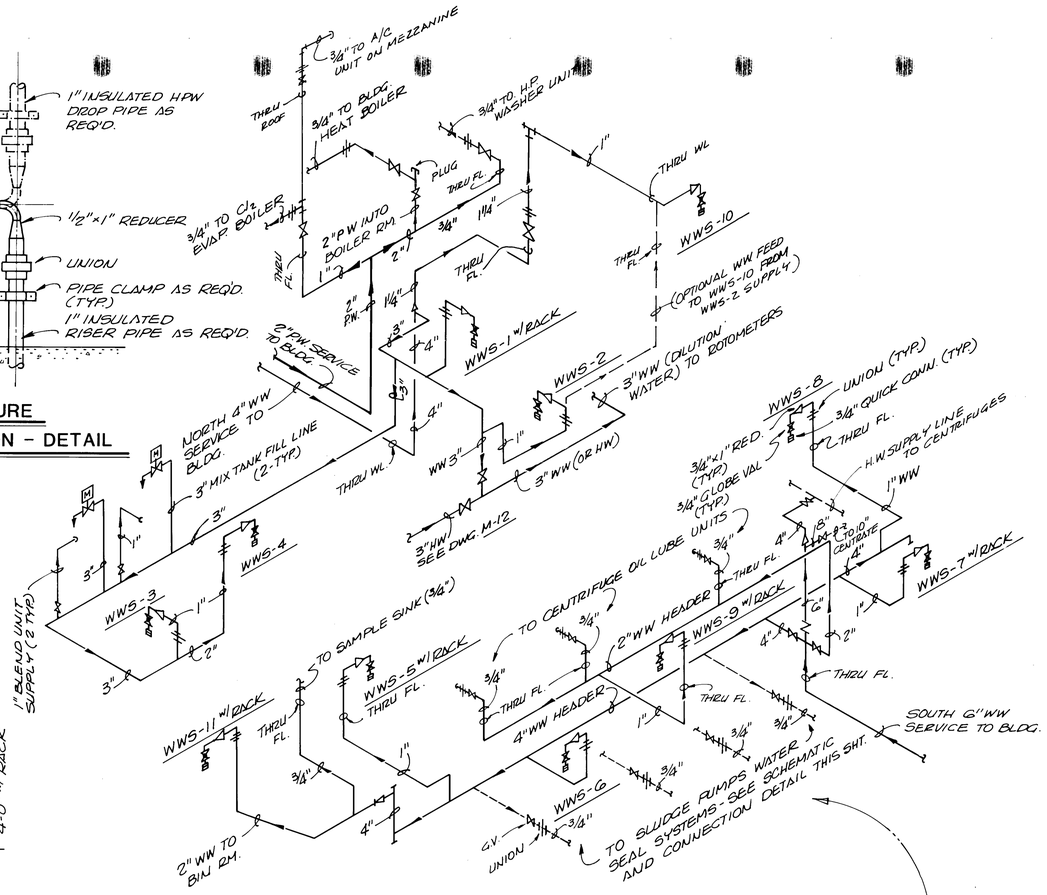

WASHWATER SYSTEM - SCHEMATIC

N.T.S.

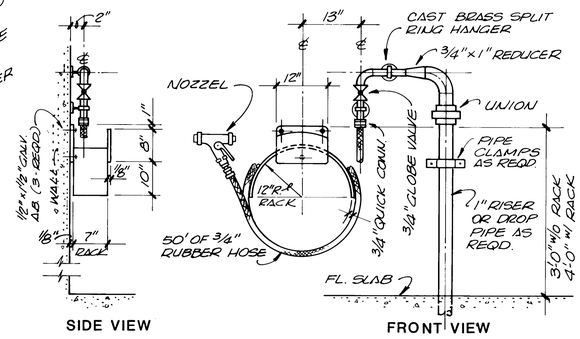

NOTE: RACK AND HOSE SET-UP AT STATIONS Nº 1, 5, 7, 9 & 11 ONLY

WASHWATER STATION DETAIL

N.T.S.

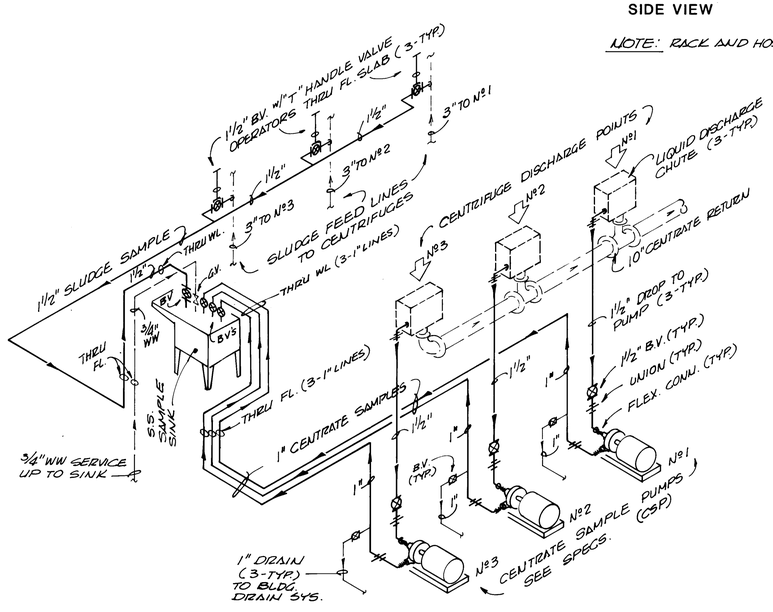

SAMPLE LINES - SCHEMATIC

N.T.S.

MOUNT VALVES, SWITCH & GAUGE ON ALUM. PANEL. PLACE PANEL NEXT TO PUMP. PANEL FABR. OF 3/16" ALUM. PL. & FRAMED W/ ALUM. L'S AS REQ'D. PANEL SUPPORT LEGS TO BE SECURED TO FLOOR

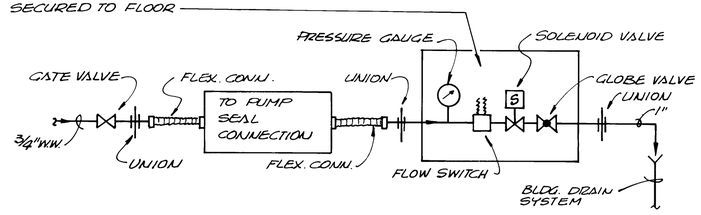

TYPICAL SEALWATER CONNECTION - DETAIL

N.T.S.

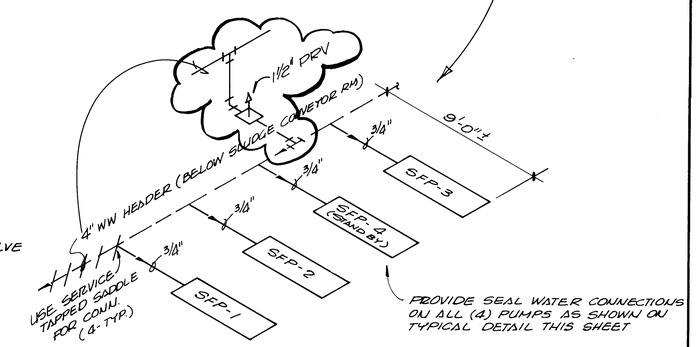

PUMP SEALWATER SYSTEM - SCHEMATIC

N.T.S.

RECORD DRAWING	
DATE: AUG. 1988	DRAFTED BY: MCA

THESE RECORD DRAWINGS HAVE BEEN PREPARED, IN PART, ON THE BASIS OF INFORMATION COMPILED AND FURNISHED BY OTHERS. THE ENGINEER WILL NOT BE RESPONSIBLE FOR ANY ERRORS OR OMISSIONS WHICH HAVE BEEN INCORPORATED INTO THIS DOCUMENT AS A RESULT.

REGISTERED PROFESSIONAL ENGINEER — LAND SURVEYOR — NEW MEXICO — EARTON T. MOLZEN

1 2 3 4 5 6 7 8 9 10 11 12 13 14 15 16 17 18 19 20 21 22 23 24 25 26 27 28 29
26 36 94 56 98

NO.	DATE	REVISIONS	APPROVED

DESIGNED LG GS
DRAWN SPINELLO
CHECKED LMR
APPROVED
APPROVED
DATE

MOLZEN-CORBIN
STANLEY CONSULTANTS
A JOINT VENTURE

NONE
GRAPHIC SCALE

CITY OF ALBUQUERQUE, NEW MEXICO
SOLIDS HANDLING FACILITIES
PHASE II B-3, CONTRACT 1

INTERIM SLUDGE DEWATERING FACILITIES
DEWATERING BUILDING
PROCESS EQUIPMENT -SCHEMATICS AND DETAILS

M-C NO. 832221
M-13
56 OF 112
SC NO.

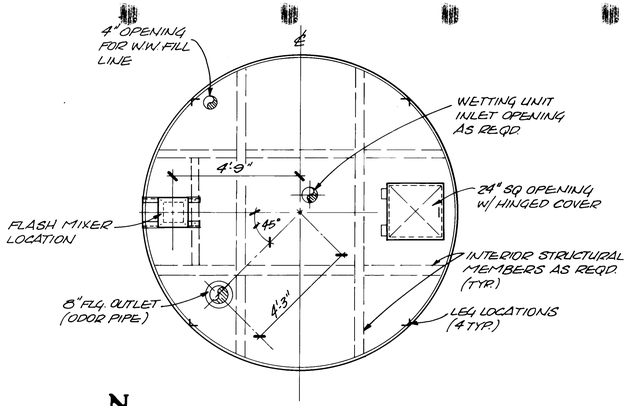

TANK NO. 2 PLAN

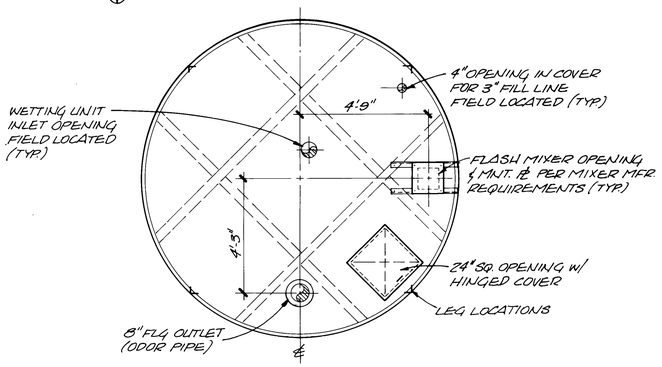

TANK NO. 1 PLAN

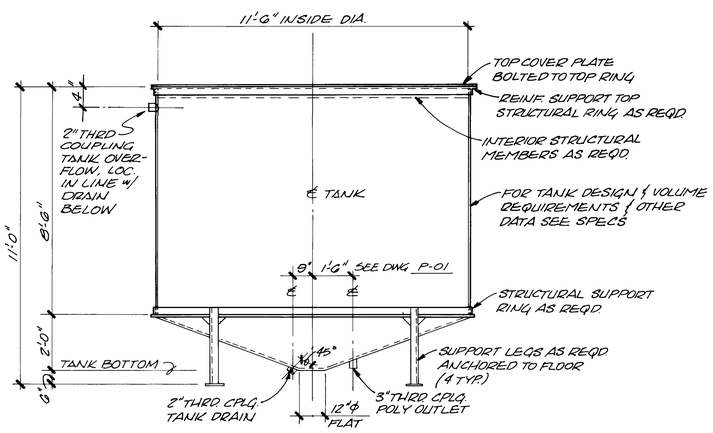

ILLUSTRATIVE ELEVATION

POLYMER MIXING TANK DETAILS (2 REQD.)

N.T.S.

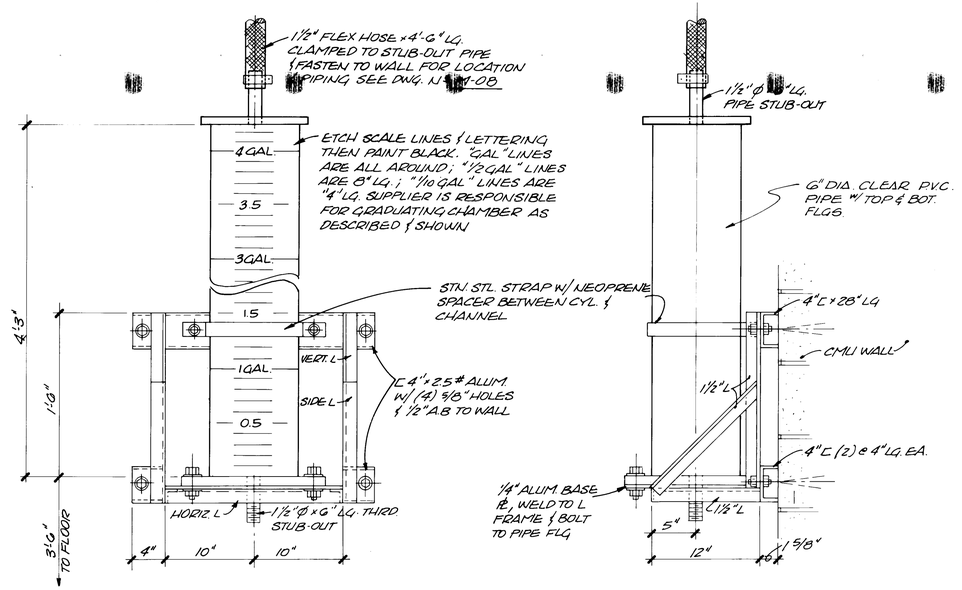

FRONT ELEVATION

SIDE VIEW

PUMP CALIBRATION CHAMBER DETAIL

N.T.S.

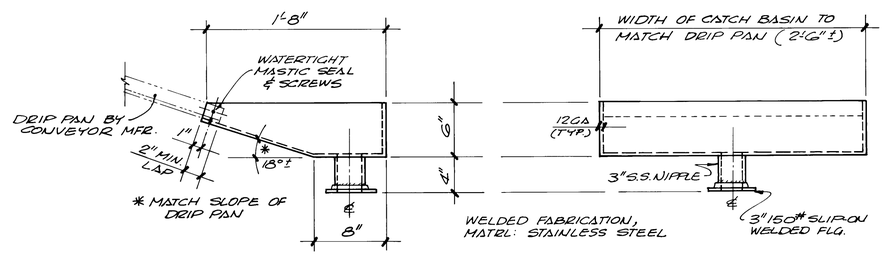

SIDE VIEW

FOR LOCATION & CONN. SEE DWG. M-04

FRONT VIEW

DRIP PAN CATCH BASIN DETAIL

N.T.S.

RECORD DRAWING

DATE:	DRAFTED BY:
AUG. 1988	MCA

THESE RECORD DRAWINGS HAVE BEEN PREPARED, IN PART, ON THE BASIS OF INFORMATION COMPILED AND FURNISHED BY OTHERS. THE ENGINEER WILL NOT BE RESPONSIBLE FOR ANY ERRORS OR OMISSIONS WHICH HAVE BEEN INCORPORATED INTO THIS DOCUMENT AS A RESULT.

REGISTERED PROFESSIONAL ENGINEER AND LAND SURVEYOR NEW MEXICO DAVID T. MOLZEN

1 2 3 4 5 6 7 8 9 10 11 12 13 14 15 16 17 18 19 20 21 22 23 24 25 26 27 28 29

2 6 3 6 9 4 5 7 8 8

NO.	DATE	REVISIONS	APPROVED

DESIGNED LMR G.S.
DRAWN DMA C.B.
CHECKED LMR
APPROVED
APPROVED
DATE

MOLZEN-CORBIN
STANLEY CONSULTANTS
A JOINT VENTURE

NONE
GRAPHIC SCALE

CITY OF ALBUQUERQUE, NEW MEXICO
SOLIDS HANDLING FACILITIES
PHASE II B- , CONTRACT 1

INTERIM SLUDGE DEWATERING FACILITIES
DEWATERING BUILDING
PROCESS EQUIPMENT -POLYMER MIX TANK AND CALIBRATION CHAMBER AND MISC. DETAILS

M-C NO. 832221
M-14
57 OF 112
SC NO.

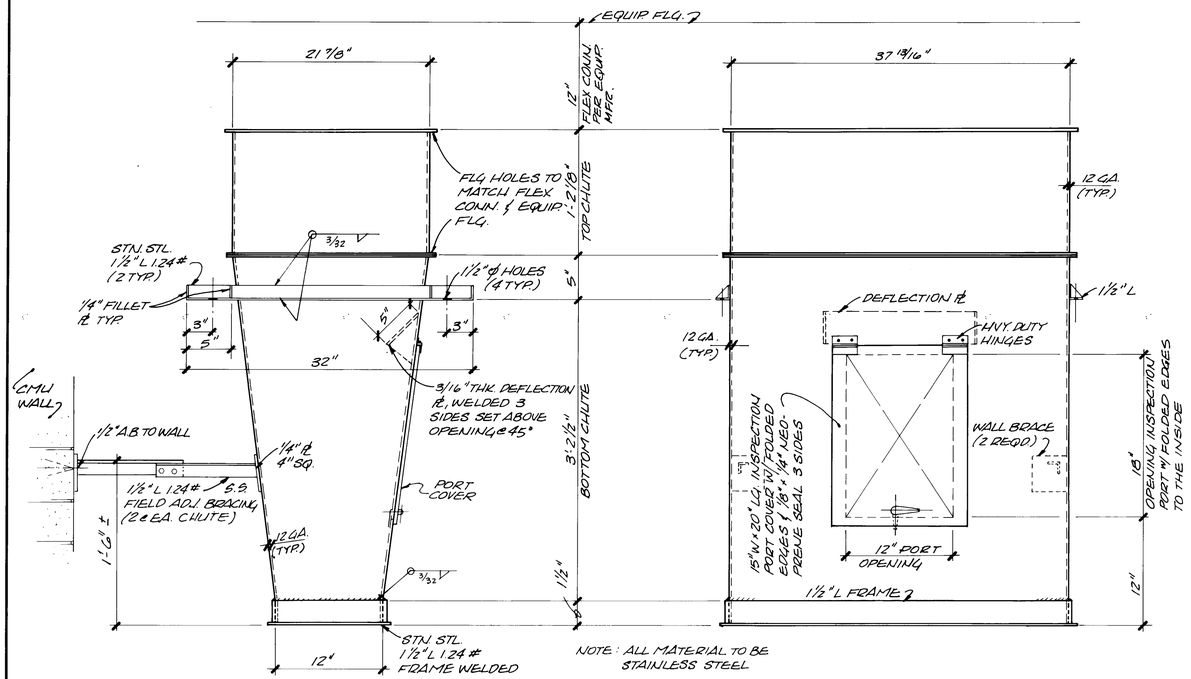

SIDE VIEW

FRONT VIEW

SOLIDS DISCHARGE CHUTE DETAIL (3 REQD.)

N.T.S.

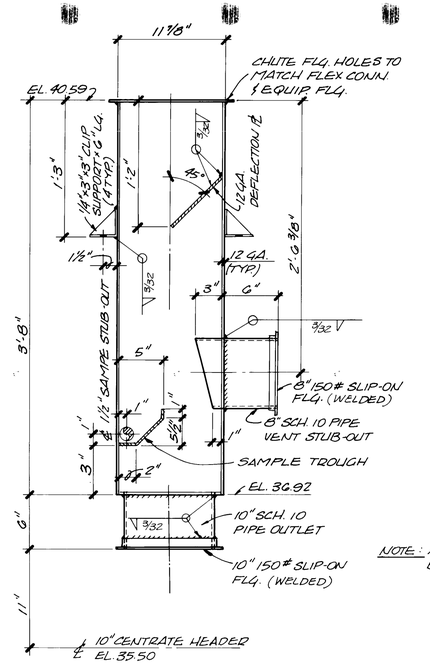

SIDE VIEW

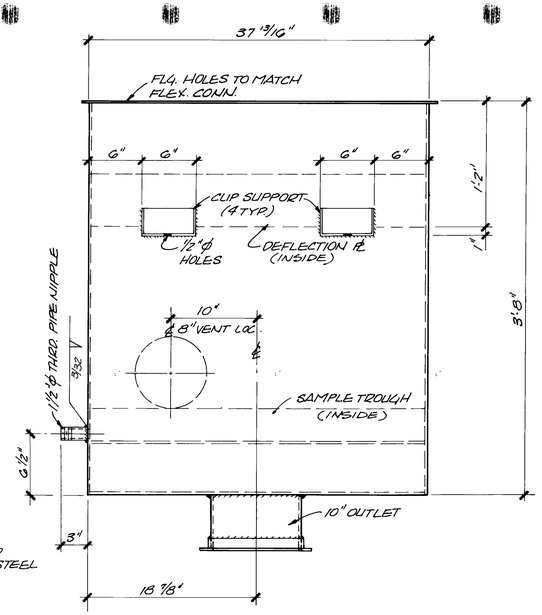

BACK VIEW

CENTRATE DISCHARGE CHUTE DETAIL (3 REQD.)

N.T.S.

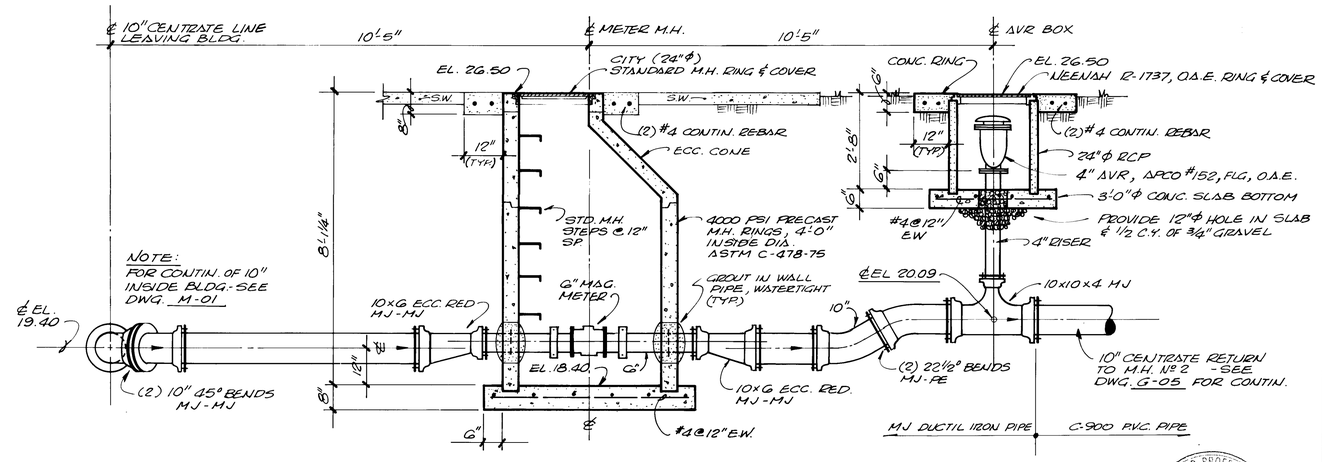

ILLUSTRATIVE SECTION LOOKING NORTH

CENTRATE RETURN METER MANHOLE - DETAIL

N.T.S.

RECORD DRAWING	
DATE: AUG. 1988	DRAFTED BY: MCA

THESE RECORD DRAWINGS HAVE BEEN PREPARED, IN PART, ON THE BASIS OF INFORMATION COMPILED AND FURNISHED BY OTHERS. THE ENGINEER WILL NOT BE RESPONSIBLE FOR ANY ERRORS OR OMISSIONS WHICH HAVE BEEN INCORPORATED INTO THIS DOCUMENT AS A RESULT.

REGISTERED PROFESSIONAL LAND SURVEYOR NEW MEXICO CARLTON T. MOLZEN

1 2 3 4 5 6 7 8 9 10 11 12 13 14 15 16 17 18 19 20 21 22 23 24 25 26 27 28 29
2 6 3 6 9 4 5 8 8 8

NO.	DATE	REVISIONS	APPROVED

DESIGNED SPINELLO
DRAWN DMA GS
CHECKED LMR
APPROVED
APPROVED
DATE

MOLZEN-CORBIN
STANLEY CONSULTANTS
A JOINT VENTURE

NONE
GRAPHIC SCALE

CITY OF ALBUQUERQUE, NEW MEXICO
SOLIDS HANDLING FACILITIES
PHASE II B-3, CONTRACT 1

INTERIM SLUDGE DEWATERING FACILITIES
DEWATERING BUILDING
PROCESS EQUIPMENT -CENTRIFUGE SOLIDS AND LIQUIDS CHUTE AND METER MANHOLE DETAILS

M-C NO. 832221
M-15
58 OF 112
SC NO.

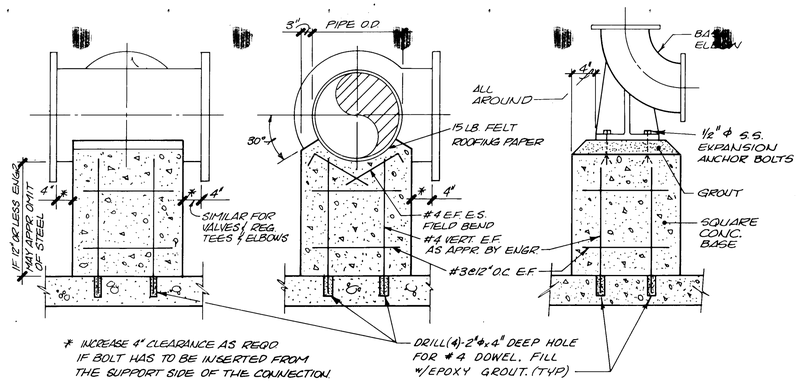

CONCRETE SUPPORT FOR VALVES, ELBOWS, TEES, OR BASE ELBOW

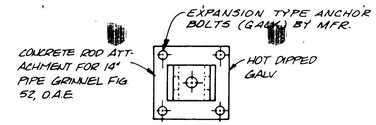

CEILING PLATE DETAIL

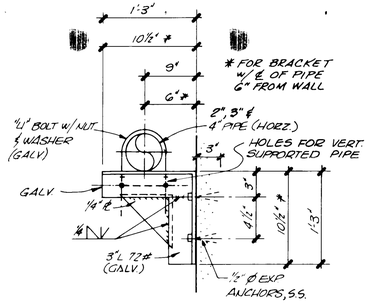

TYPE "A"

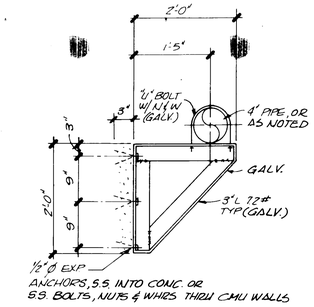

TYPE "B"

WALL BRACKET DETAILS

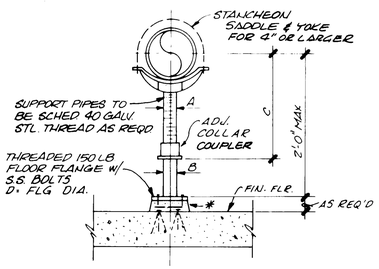

ADJ. PIPE SADDLE SUPPORT

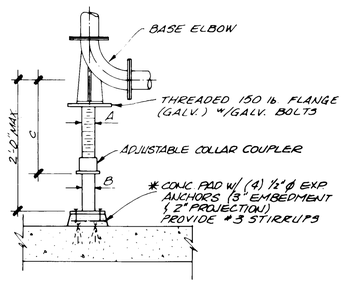

ADJ. PIPE SUPPORT FOR BASE ELBOWS

ADJUSTABLE PIPE SADDLE SUPPORTS					
NOM. PIPE ϕ	A ϕ	B ϕ	D ϕ	C MIN.	C MAX.
UP TO 3½"	1½"	2½"	9"	8"	13"
4"	2½"	3"	9"	9¼"	14"
6"	2½"	3"	9"	10½"	15"
8"	2½"	3"	9"	11¾"	16"
10"	2½"	3"	9"	13½"	18"

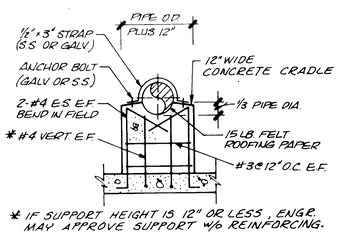

CONCRETE PIPE SUPPORT

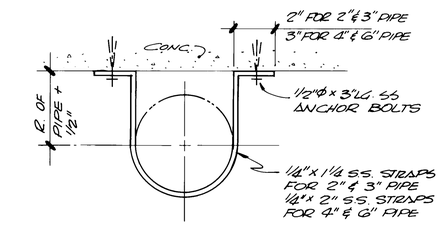

CEILING PIPE STRAPS DETAIL

N.T.S.

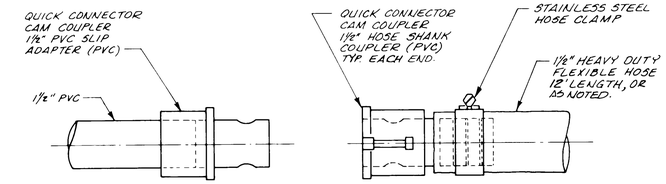

PIPE COUPLER

HOSE COUPLER

NOTE: SEE DWG. M-06, M-08

DETAIL A - QUICK LOCK CONNECTOR

NTS

SPLIT RING PIPE HANGER

PIPE DIA. LESS THAN 4"

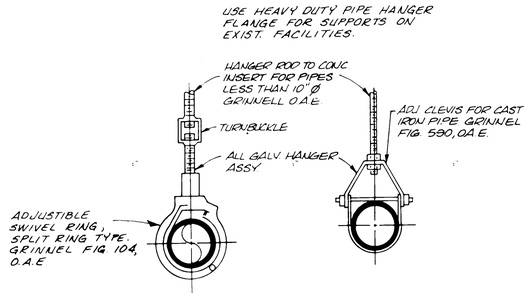

CLEVIS PIPE HANGER

PIPE DIA 4" TO 14"

NOTE: SEE DWG. M-06, M-08

DETAIL A - QUICK LOCK CONNECTOR

NTS

RECORD DRAWING

DATE: AUG. 1988	DRAFTED BY: MCA

THESE RECORD DRAWINGS HAVE BEEN PREPARED, IN PART, ON THE BASIS OF INFORMATION COMPILED AND FURNISHED BY OTHERS. THE ENGINEER WILL NOT BE RESPONSIBLE FOR ANY ERRORS OR OMISSIONS WHICH HAVE BEEN INCORPORATED INTO THIS DOCUMENT AS A RESULT.

REGISTERED PROFESSIONAL ENGINEER & LAND SURVEYOR No. 1809 NEW MEXICO DAYTON F. MOLZEN

1 2 3 4 5 6 7 8 9 10 11 12 13 14 15 16 17 18 19 20 21 22 23 24 25 26 27 28 29
2 6 3 6 9 4 5 9 8 8

NO.	DATE	REVISIONS	APPROVED

DESIGNED
DRAWN DMA GS
CHECKED
APPROVED
APPROVED
DATE

MOLZEN-CORBIN
STANLEY CONSULTANTS
A JOINT VENTURE

NONE
GRAPHIC SCALE

CITY OF ALBUQUERQUE, NEW MEXICO
SOLIDS HANDLING FACILITIES
PHASE II B-3, CONTRACT 1

INTERIM SLUDGE DEWATERING FACILITIES
DEWATERING BUILDING
PROCESS EQUIPMENT -MISC. DETAILS

M-C NO. 832221
M-16
59 OF 112
SC NO.

82624

MECHANICAL STANDARD PIPING DESIGN TABLE — POWER PIPING CLASS P1450A, 1550 PSIG, 650F (M-1860)

PIPE	MATERIAL, ASTM			A106 B	
PIPE	MINIMUM PIPE SIZE TO BE USED			1"	
PIPE	MINIMUM WALL THICKNESS	PIPE SIZES (INCLUSIVE)		WALL THICKNESS	
		1" - 8"		SCH. 80	
		10" - 24"		SCH. 100	
JOINTS	TYPE OF JOINT	SCREWED	SOCKET WELDED	BUTT WELDED	FLANGED
JOINTS	USE FOR PIPE SIZE(INCL)	NONE	1" - 2"	2 1/2" AND LARGER	2 1/2" AND LARGER
FLANGES	MATERIAL, ASTM				A105 OR A181 II
FLANGES	PRESSURE CLASS, ANSI				900
FLANGES	FACING				1/4" RAISED FACE SERRATED
FLANGES	GASKETS				FLEXITALLIC STYLE CG
FLANGES	BOLT STUDS, ASTM				A193 B7
FLANGES	NUTS, ASTM				A194 2H
FITTINGS	MATERIAL, ASTM		A234 WPB	A234 WPB OR WPBW	A216 WCB
FITTINGS	PRESSURE CLASS, ANSI		3000	---	1500
FITTINGS	MINIMUM WALL THICKNESS		---	SAME AS PIPE	---
FITTINGS	WELDING END		---	M-500, M-501 OR M-502 (1)	---
FITTINGS	UNIONS		---	---	---
VALVES-RISING STEM	BODY MATERIAL, ASTM		A105 OR A181 II	A105 OR A216 WCB	A105 OR A216 WCB
VALVES-RISING STEM	PRESSURE CLASS, ANSI		1500	900	900
VALVES-RISING STEM	BONNET TYPE		INTEGRAL OR SEAL WELDED	BOLTED	BOLTED
VALVES-RISING STEM	INTERNALS AND TRIM		A182 F6 W/ STELLITED SEAT AND DISC.		
VALVES-RISING STEM	BYPASS REQUIRED ON VALVES LARGER THAN		---	4"	4"

NOTES

(1) NO BACKING RING 3 1/2" AND SMALLER.

REVISIONS | DATE | DWN | APP — DRAWN DL, CHECKED DS, APPROVED, APPROVED, DATE 2-19-74

MECHANICAL STANDARD PIPING DESIGN TABLE | POWER PIPING CLASS P1450A 1550 PSIG 650F | SCALE NONE | NO. M-1860 | REV 0

MECHANICAL STANDARD PIPING DESIGN TABLE — INSTRUMENT AND CONTROL PIPING CLASS I 1500, 1500 PSIG, 800 F (M-1905)

PIPE	MATERIAL	ASTM A106-A SEAMLESS CARBON STEEL
PIPE	SIZE	1/2" NOMINAL PIPE SIZE
PIPE	MINIMUM THICKNESS	0.147" (SCHEDULE 80)
JOINTS	TYPE	SOCKET WELDED
FITTINGS	TYPE	ASTM A105-II FORGED STEEL, SOCKET WELDING, 3000 LB. W.O.G.
FITTINGS	UNIONS	ASTM A105-II, FORGED STEEL, SOCKET WELDING, GROUND JOINT, 6000 LB. W.O.G.
VALVES-RISING STEM	TYPE	FORGED STEEL, NEEDLE, OUTSIDE SCREW AND YOKE, EDWARD FIG. 952Y-953Y, OR EQUAL.
VALVES-RISING STEM	BODY MATERIAL	ASTM A105-II CARBON STEEL
VALVES-RISING STEM	PRESSURE CLASS	6000 LB. W.O.G.
VALVES-RISING STEM	BONNET TYPE	INTEGRAL
VALVES-RISING STEM	INTERNALS	STEM AND DISC - ASTM A182-F6 STAINLESS. SEAT-STELLITED.
VALVES-RISING STEM	ENDS	SOCKET WELDING

NOTES

(1) USE MATERIAL SPECIFIED IN THIS DESIGN TABLE ONLY FOR LOW TEMPERATURE PIPING BETWEEN ISOLATING VALVE AT MAIN PIPING OR EQUIPMENT AND INSTRUMENTS OR CONTROLS. THIS TABLE DOES NOT APPLY TO INSTRUMENT PIPING FROM PRESSURE SOURCE TO AND INCLUDING FIRST SHUT-OFF VALVE.

(2) CAN BE USED FOR PRESSURES UP TO 2000 PSIG AT TEMPERATURES OF 650 F AND BELOW.

(3) PRESSURES AND TEMPERATURES SHOWN HEREON REFER TO MAIN LINE SERVICE CONDITIONS.

REVISIONS: 2-MAX. P & T 8-9-78 ADC; 1-CHANGED PRESS. NO. 82 TO 1900 — DRAWN SAC, CHECKED L.L.H., APPROVED, DATE 4-24-67

MECHANICAL STANDARD PIPING DESIGN TABLE | INSTRUMENT AND CONTROL PIPING CLASS I 1500 1500 PSIG 800 F | SCALE NONE | NO M-1905 | REV 2

MECHANICAL STANDARD INSULATION — PIPING AND EQUIPMENT INSULATION THICKNESS (M-1002)

NOMINAL INSULATION THICKNESS (INCHES)

NOMINAL PIPE SIZE(INCHES)	100°-300°F CLASS A	300°-500°F CLASS B	500°-700°F CLASS C	700°-875°F CLASS D	875°-1200°F CLASS E
1/2	1	1	1 1/2	2	2 1/2
3/4	1	1 1/2	2	2	2 1/2
1	1	1 1/2	2	2 1/2	3
1 1/4	1	1 1/2	2 1/2	3	3
1 1/2	1	2	2 1/2	3	3 1/2
2	1 1/2	2	2 1/2	3 1/2	3 1/2
2 1/2	1 1/2	2	3	3 1/2	4
3	1 1/2	2 1/2	3	4	4 1/2
4	1 1/2	2 1/2	3 1/2	4	4 1/2
5	2	3	4	4 1/2	5
6	2	3	4	5	5 1/2
8	2	3 1/2	4 1/2	5	6
10	2 1/2	3 1/2	4 1/2	5 1/2	6
12 & OVER	2 1/2	3 1/2	4 1/2	5 1/2	6
EQUIPMENT	2 1/2	4	5 1/2	6	7

NOTES

1. INSULATION THICKNESSES SHOWN ABOVE ARE MINIMUM BLOCK THICKNESSES AND DO NOT INCLUDE FINISHING OR SEALING COATS. FOR FINISH COAT OR JACKET, SEE SPECIFICATIONS.
2. ON OUTDOOR EQUIPMENT & PIPING, INSULATION THICKNESS SHOWN ABOVE SHALL BE INCREASED 1/2 INCH.
3. ANTI-SWEAT (CLASS S):

FOR PIPE

30" AND LESS: SECTIONAL PIPE INSULATION, 1 INCH THICK.
OVER 30": EMULSION INSULATION, 3/8 INCH FINAL THICKNESS.

FOR IRREGULAR SURFACES (WATER BOXES, ETC.)

EMULSION INSULATION, 3/8 INCH FINAL THICKNESS.

FOR REGULAR SURFACES (TANKS, COOLER, ETC.)

SECTIONAL OR BLOCK INSULATION, 1 INCH THICK.

REVISIONS | DATE | DWN | APP — DRAWN H.T.J., CHECKED, APPROVED, APPROVED, DATE 9-26-74

MECHANICAL STANDARD INSULATION | PIPING AND EQUIPMENT INSULATION THICKNESS | SCALE NONE | NO. M-1002 | REV 0

MECHANICAL STANDARD PIPING DESIGN TABLE — SOIL, WASTE AND VENT PIPING CLASS SP-CISV HUB & SPIGOT FOR DRAINAGE SERVICE ONLY (M-1776)

PIPE	MATERIAL	ASTM A74 CAST IRON	
PIPE	SIZES (INCLUSIVE)	2" - 15"	
PIPE	THICKNESS (1)	SERVICE WEIGHT (SV)	
JOINTS	TYPE (2)	HUB AND SPIGOT CAULKED	HUB AND PLAIN END COMPRESSION - TYPE
JOINTS	JOINT MATERIAL	LEAD, ASTM B29 AND JUTE OR OAKUM, OILED	NEOPRENE GASKET CISPI HSN 75
FITTINGS	MATERIAL	ASTM A74	ASTM A74
FITTINGS	MINIMUM WALL (1)	SERVICE WEIGHT (SV)	SERVICE WEIGHT (SV)

NOTES

(1) AS APPROVED BY STATE AND LOCAL PLUMBING CODES.

(2) PUSH-ON COMPRESSION - TYPE JOINTS MAY BE USED WHEN PERMITTED BY STATE AND LOCAL CODES.

REVISIONS | DATE | DWN | APP — DRAWN H.T.J., CHECKED, APPROVED, APPROVED, DATE 4-7-76

STANLEY CONSULTANTS

MECHANICAL STANDARD PIPING DESIGN TABLE | SOIL WASTE AND VENT PIPING CLASS SP-CISV HUB & SPIGOT FOR DRAINAGE SERVICE ONLY | SCALE NONE | NO. M-1776 | REV 0

MECHANICAL STANDARD PIPING DESIGN TABLE — GENERAL SERVICE PIPING CLASS ST125G, 125 PSIG, 220 F (M-1720)

	MATERIAL ASTM			A120 OR A53A GALVANIZED	
	MINIMUM PIPE SIZE TO BE USED			3/8"	
PIPE	MINIMUM WALL THICKNESS	PIPE SIZES (INCLUSIVE)		WALL THICKNESS	
		3/8" - 24"		STANDARD WEIGHT	
JOINTS	TYPE OF JOINT	SCREWED	SOCKET WELDED	BUTT WELDED	FLANGED
JOINTS	USE FOR PIPE SIZE (INCL)	3/8" - 2"	NONE	NONE	2 1/2"-24"
FLANGES	MATERIAL, ASTM				A181 II GALVANIZED
FLANGES	PRESSURE CLASS, ANSI				150
FLANGES	FACING				FLAT
FLANGES	GASKETS				FULL FACE 1/16" RED RUBBER
FLANGES	BOLT STUDS, ASTM				A307 B
FLANGES	NUTS, ASTM				A307 B HEX. HD.
FITTINGS	MATERIAL ASTM	A197 GALVANIZED			A126 GALVANIZED
FITTINGS	PRESSURE CLASS, ANSI	150			125
FITTINGS	MINIMUM WALL THICKNESS	---			---
FITTINGS	WELDING END	---			---
FITTINGS	UNIONS	GROUND JOINT SCREWED			---
VALVES-RISING STEM	BODY MATERIAL, ASTM	B62 BRONZE			A126 CAST IRON
VALVES-RISING STEM	PRESSURE CLASS, ANSI	125			125
VALVES-RISING STEM	BONNET TYPE	SCREWED			BOLTED
VALVES-RISING STEM	INTERNALS AND TRIM	BRONZE OR COMP. (1)			RENEWABLE BRONZE
VALVES-RISING STEM	BYPASS REQUIRED ON VALVES LARGER THAN	---			---

NOTES

(1) GATE VALVES-BRONZE SEAT AND DISC; GLOBE VALVES-BRONZE SEAT WITH RENEWABLE COMPOSITION DISC.

REVISIONS: 1-CHANGED MATERIAL — DATE 4-24-67

MECHANICAL STANDARD PIPING DESIGN TABLE | GENERAL SERVICE PIPING CLASS ST125G 125 PSIG 220 F | SCALE NONE | NO. M-1720 | REV 1

MECHANICAL STANDARD PIPING DESIGN TABLE — GENERAL SERVICE PIPING CLASS DI150, 150 PSIG, 120F (M-1735)

PIPE	MATERIAL	ANSI A21.51 DUCTILE IRON
PIPE	SIZES (INCLUSIVE)	3" - 48"
PIPE	MINIMUM THICKNESS	ANSI A21.50. LAYING CONDITION TYPE . DEPTH OF COVER SHOWN ON DRAWINGS (NOTE 1)
JOINTS	TYPE	ANSI A21.11. MECHANICAL OR PUSH-ON TYPE (NOTE 2)
FITTINGS	TYPE	ANSI A21.10 DUCTILE IRON
FITTINGS	LAYING DIMENSIONS	ANSI A21.10. PRESSURE RATING 3" THROUGH 24" 350 PSI. 30" AND LARGER 250 PSI
FITTINGS	GASKETS	ANSI A21.11. PLAIN RUBBER
FITTINGS	BOLTS AND NUTS	ANSI A21.11. CAST IRON. TEE HEAD
GATE VALVES NON-RISING STEM	STANDARD	AWWA C500 GATE VALVES. OR AWWA C504 BUTTERFLY VALVES. AS SPECIFIED
GATE VALVES NON-RISING STEM	BODY MATERIAL	ASTM A126 CLASS B CAST IRON
GATE VALVES NON-RISING STEM	PRESSURE CLASS	AWWA 200 (12" AND SMALLER) AWWA 150 (14" AND LARGER)
GATE VALVES NON-RISING STEM	BONNET TYPE	BOLTED
GATE VALVES NON-RISING STEM	INTERNALS AND TRIM	BRASS OR BRONZE
GATE VALVES NON-RISING STEM	BYPASS	NONE
GATE VALVES NON-RISING STEM	STEM SEAL	O-RING
GATE VALVES NON-RISING STEM	DISC	DOUBLE DISC GATE. OR PIVOTED DISC BUTTERFLY. AS SPECIFIED

NOTES

1. WHEN DEPTH OF COVER FALLS BETWEEN DEPTHS LISTED IN TABLE CHOOSE NEXT GREATER LISTED DEPTH.

MODIFICATION 1

REVISIONS | DWN. | APP. | APP. | DATE — DESIGNED Don Swanson, DRAWN, CHECKED, APPROVED, APPROVED, DATE 5-21-79

MECHANICAL STANDARD PIPING DESIGN TABLE | GENERAL SERVICE PIPING CLASS DI150 150 PSIG 120F | SCALE NONE | NO. M-1735 | REV 0

MECHANICAL STANDARD PIPING DESIGN TABLE — POWER PIPING CLASS P150A1, 150 PSIG, 220 F (M-1800)

PIPE	MATERIAL ASTM			A53 A OR B TYPE E OR S (1)	
PIPE	MINIMUM PIPE SIZE TO BE USED			1/4"	
PIPE	MINIMUM WALL THICKNESS	PIPE SIZES (INCLUSIVE)		WALL THICKNESS	
		1/4" - 2"		SCH. 80	
		2-1/2" - 6"		SCH. 40	
		8" - 12"		SCH. 20	
		14" - 24"		SCH. 10	
JOINTS	TYPE OF JOINT	SCREWED	SOCKET WELDED	BUTT WELDED	FLANGED
JOINTS	USE FOR PIPE SIZE (INCL)	1/4" - 2"	NONE	2 1/2" & LARGER	2 1/2" & LARGER
FLANGES	MATERIAL, ASTM				A105 OR A181 II
FLANGES	PRESSURE CLASS, ANSI				150
FLANGES	FACING				1/16" R.F. OR FLAT FACE (2)
FLANGES	GASKETS				CRANITE 1/16" THICK
FLANGES	BOLT STUDS, ASTM				A307B
FLANGES	NUTS ASTM				A307B HEX.
FITTINGS	MATERIAL ASTM	A338 MALLEABLE		A234 GRADE WPA OR WPB	A126 B OR C CAST IRON
FITTINGS	PRESSURE CLASS, ANSI	150		---	125
FITTINGS	MINIMUM WALL THICKNESS	---		SAME AS PIPE	---
FITTINGS	WELDING END	---		STD. BEVEL, (5) COM. FLAT RING	---
FITTINGS	UNIONS	SCREWED, GROUND JOINT		---	---
VALVES-RISING STEM	BODY MATERIAL, ASTM	B62 BRONZE		NONE	A126 B OR C CAST IRON (4)
VALVES-RISING STEM	PRESSURE CLASS, ANSI	150			125 (4)
VALVES-RISING STEM	BONNET TYPE	UNION			BOLTED
VALVES-RISING STEM	INTERNALS AND TRIM	BRONZE OR COMP. (3)			RENEWABLE BRONZE
VALVES-RISING STEM	BYPASS REQUIRED ON VALVES LARGER THAN	---			---

NOTES

(1) ALL THREADED PIPE SHALL BE SEAMLESS (TYPE S).
(2) USE FLAT FACE FLANGES FOR MATING WITH 125 POUND CAST IRON FLANGES OF VALVES OR EQUIPMENT.
(3) GLOBE VALVES - ASBESTOS COMPOSITION DISCS FOR COLD WATER, AIR OR GAS SERVICE; ALL OTHER SERVICES - BRONZE SEATS AND DISCS.
(4) 125 POUND CAST IRON VALVES LIMITED TO 12" MAXIMUM SIZE. FOR 14" AND LARGER SIZES USE ANSI 150 POUND CAST STEEL VALVES, ASTM A216-WCB.
(5) NO BACKING RING 3-1/2" AND SMALLER.

REVISIONS: 1-GENERAL — DATE 4-24-67

MECHANICAL STANDARD PIPING DESIGN TABLE | POWER PIPING CLASS P150A1 150 PSIG 220 F | SCALE NONE | NO. M-1800 | REV 1

MECHANICAL STANDARD CATHODIC PROTECTION SYSTEM — TYPICAL PIPE BOND-TYPE A (M-655)

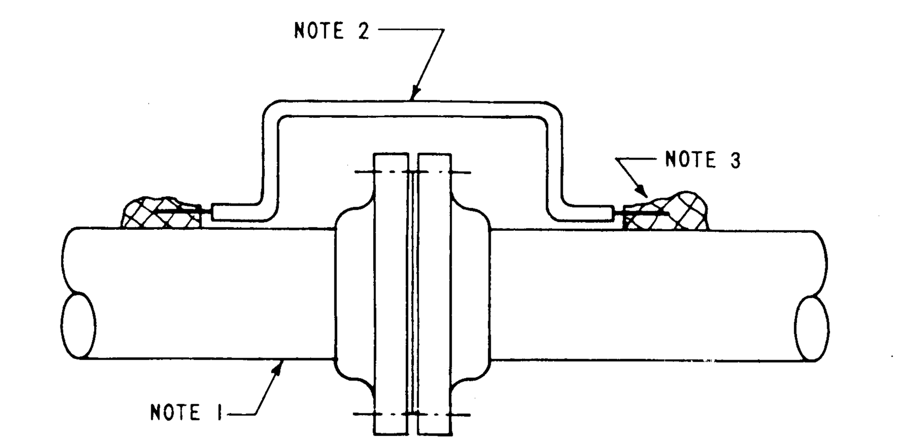

NOTES

1. THIS DETAIL APPLIES TO STEEL OR CAST IRON PIPE HAVING FLANGED, MECHANICAL OR B & S JOINTS.
2. JUMPER CABLE #1/0 AWG. STRANDED, WITH TW INSULATION. PROVIDE SUFFICIENT SLACK FOR PIPE MOVEMENT OR EXPANSION.
3. BRAZED CONNECTION, AS SHOWN ON M-651.

RECORD DRAWING

DATE: AUG. 1988 | DRAFTED BY: MCA

THESE RECORD DRAWINGS HAVE BEEN PREPARED, IN PART, ON THE BASIS OF INFORMATION COMPILED AND FURNISHED BY OTHERS. THE ENGINEER WILL NOT BE RESPONSIBLE FOR ANY ERRORS OR OMISSIONS WHICH HAVE BEEN INCORPORATED INTO THIS DOCUMENT AS A RESULT.

REGISTERED PROFESSIONAL ENGINEER AND LAND SURVEYOR — NEW MEXICO — No. 1805 — CLAYTON F. MOLZEN

REVISIONS | DATE | DWN | APP — DRAWN, CHECKED, APPROVED, APPROVED, DATE 8-27-1970

MECHANICAL STANDARD CATHODIC PROTECTION SYSTEM | TYPICAL PIPE BOND-TYPE A | SCALE NONE | NO. M-655 | REV. 0

1 2 3 4 5 6 7 8 9 10 11 12 13 14 15 16 17 18 19 20 21 22 23 24 25 26 27 28 29

2 6 3 6 9 4 6 0 8 8

NO.	DATE	REVISIONS	APPROVED

DESIGNED SC-MC
DRAWN STAFF
CHECKED L.G., LMZ.
APPROVED
APPROVED
DATE

MOLZEN-CORBIN
STANLEY CONSULTANTS
A JOINT VENTURE

NONE
GRAPHIC SCALE

CITY OF ALBUQUERQUE, NEW MEXICO
SOLIDS HANDLING FACILITIES
PHASE II B-3, CONTRACT 1

INTERIM SLUDGE DEWATERING FACILITIES
DEWATERING BUILDING
PROCESS EQUIPMENT — PIPING SPECIFICATIONS AND STANDARDS

M-C NO. 832221
M-17
60 of 112
SC NO.

82624

PIPE AND INSULATION SCHEDULE

	PIPE				INSULATION		
SERVICE	MATERIAL	MECHANICAL STANDARD	WORKING PRESSURE PSIG	TEMP OF	MATERIAL	MECHANICAL STANDARD	REMARKS
POLYMER	POLYVINYL CHLORIDE	SEE SECTION 15050	75-100	AMBIENT	—	—	
POTABLE WATER	POLYVINYL CHLORIDE	SEE SECTION 15050	55-85	55			BECOMES GALVANIZED STEEL 5 FT. OUTSIDE BUILDING
	GALVANIZED STEEL (1)		55-85	55	ELASTOMERIC	—	SEE SPECIFICATIONS FOR INSUL. THICKNESS
WASHWATER	POLYVINYL CHLORIDE	SEE SECTION 15050	55-85	55			SEE NOTE (2)
WASHWATER (4 INCHES AND LARGER INSIDE BUILDING)	DUCTILE IRON (1)	M-1735	55-85	55	—	—	
WASHWATER (3 INCHES AND SMALLER INSIDE BUILDING)	GALVANIZED STEEL	M-1720	55-85	55			
HOUSEWATER	POLYVINYL CHLORIDE	SEE SECTION 15050	10	55	—	—	SEE NOTE (2)
HOUSEWATER (4 INCHES AND LARGER INSIDE BUILDING)	DUCTILE IRON (1)	M-1735	10	55	—	—	
HOUSEWATER (3 INCHES AND SMALLER INSIDE BUILDING)	GALVANIZED STEEL	M-1720	10	55	—	—	
HIGH PRESSURE/HOT WATER	CARBON STEEL	M-1905 M-1860	1000	200	FIBERGLASS	M-1002	
DIGESTER SLUDGE	POLYVINYL CHLORIDE	SEE SECTION 15050	50	105	—	—	SEE NOTE (2)
	DUCTILE IRON (1)	M-1735	50	105	—	—	
SLUDGE FEED TO CENTRIFUGE	DUCTILE IRON	M-1735	20	105	—	—	INCL. OVERFLOW & DRAIN PIPING ON SLDG FEED TNK
CENTRATE	POLYVINYL CHLORIDE	SEE SECTION 15050	10	100	—	—	FROM AIR RELEASE BOX TO EXISTING PIPE
	DUCTILE IRON (1)	M-1735	10	100			
CHLORINE EVAPORATOR HOT WATER ABOVE GRADE	CARBON STEEL	M-1800	75	200	FIBERGLASS	M-1002	
CHLORINE EVAPORATOR HOT WATER BELOW GRADE	REINFORCED FIBERGLASS	SEE SECTION 15260	75	200	POLYURETHANE FOAM	—	SEE SPECIFICATIONS FOR THICKNESS
EQUIPMENT DRAIN LINES	GALVANIZED STEEL	M-1720	—	—	—	—	
CARBON ADSORBER VESSEL DRAIN	POLYVINYL CHLORIDE	SEE SECTION 15050	—	—	—		
FLOOR DRAIN SYSTEM	CAST IRON (1)	M-1776	—	—	—	—	TO EXTEND FIVE (5) FEET FROM BUILDING BELOW GRADE
EXTERIOR DRAIN SYSTEM	POLYVINYL CHLORIDE	SEE SECTION 15050	—	—	—	—	
SAMPLE SINK SYSTEM	POLYVINYL CHLORIDE	SEE SECTION 15050	20	55	—	—	
CHLORINE SOLUTION LINE	POLYVINYL CHLORIDE	SEE SECTION 15050	20	55	—	—	
NATURAL GAS	CARBON STEEL	M-1800	5	AMBIENT	—	—	
BUILDING HEATING - WATER ABOVE GRADE	CARBON STEEL	M-1800	75	180	FIBERGLASS	M-1002	
BUILDING HEATING - WATER BELOW GRADE	REINFORCED FIBERGLASS	SEE SECTION 15260	75	180	POLYURETHANE FOAM	-	SEE SPECIFICATION FOR THICKNESS

(1) ENCASE PIPE BELOW GRADE WITH 8 MIL. POLYETHYLENE TUBE CONFORMING TO ANSI A21.5. PROVIDE ELECTRICAL CONTINUITY IN ACCORDANCE WITH MECHANICAL STANDARD M-655.

(2) PIPING BELOW STRUCTURE AND PIPING WITHIN 5-FEET OF STRUCTURE TO BE DUCTILE IRON.

(3) INSULATION WHERE NOTED ON DRAWINGS.

PUMP SCHEDULE

Designation on Drawings	Pump Type	Flow Rate GPM	Head Ft. Water	Motor Data HP (1)	Max. RPM	Volts	Phase	Hertz	Remarks	Equipment Tag No.
Sludge Feed Pump SFP-1	Progressing Cavity	200-75	50	7.5	1200	460	3	60	Variable Speed	
Sludge Feed Pump SFP-2	Progressing Cavity	200-75	50	7.5	1200	460	3	60	Variable Speed	
Sludge Feed Pump SFP-3	Progressing Cavity	200-75	50	7.5	1200	460	3	60	Variable Speed	
Sludge Feed Pump SFP-4	Progressing Cavity	200-75	50	7.5	1200	460	3	60	Variable Speed, Standby Pump	
Polymer Feed Pump PFP-1	Progressing Cavity	12-2	50	1.0	1200	230	3	60	Variable Speed	
Polymer Feed Pump PFP-2	Progressing Cavity	12-2	50	1.0	1200	230	3	60	Variable Speed	
Polymer Feed Pump PFP-3	Progressing Cavity	12-2	50	1.0	1200	230	3	60	Variable Speed	
Polymer Feed Pump PFP-4	Progressing Cavity	12-2	50	1.0	1200	230	3	60	Variable Speed, Standby Pump	
Centrate Sample Pump CSP-1	Horiz. Centrifugal	5	25	1/3	1750	230	3	60	Constant Speed	
Centrate Sample Pump CSP-2	Horiz. Centrifugal	5	25	1/3	1750	230	3	60	Constant Speed	
Centrate Sample Pump CSP-2	Horiz. Centrifugal	5	25	1/3	1750	230	3	60	Constant Speed	

(1)Estimated horsepower. Actual horsepower shall meet specified operating conditions and manufacturer's requirements.

REGISTERED PROFESSIONAL ENGINEER AND LAND SURVEYOR No. 1809 NEW MEXICO DAYTON F. MOLZEN

RECORD DRAWING

DATE: AUG. 1988 | DRAFTED BY: MCA

THESE RECORD DRAWINGS HAVE BEEN PREPARED, IN PART, ON THE BASIS OF INFORMATION COMPILED AND FURNISHED BY OTHERS. THE ENGINEER WILL NOT BE RESPONSIBLE FOR ANY ERRORS OR OMISSIONS WHICH HAVE BEEN INCORPORATED INTO THIS DOCUMENT AS A RESULT.

1 2 3 4 5 6 7 8 9 10 11 12 13 14 15 16 17 18 19 20 21 22 23 24 25 26 27 28 29
2 6 3 6 9 4 6 1 8 8

NO.	DATE	REVISIONS	APPROVED

DESIGNED LG. LMR
DRAWN LG. GS
CHECKED LMR
APPROVED
APPROVED
DATE

MOLZEN-CORBIN
STANLEY CONSULTANTS
A JOINT VENTURE

NONE
GRAPHIC SCALE

CITY OF ALBUQUERQUE, NEW MEXICO
SOLIDS HANDLING FACILITIES
PHASE II B-3, CONTRACT 1

INTERIM SLUDGE DEWATERING FACILITIES
DEWATERING BUILDING
PROCESS EQUIPMENT- PUMP AND PIPE SCHEDULES

M-C NO. 832221
M-18
61 of 112
SC NO.

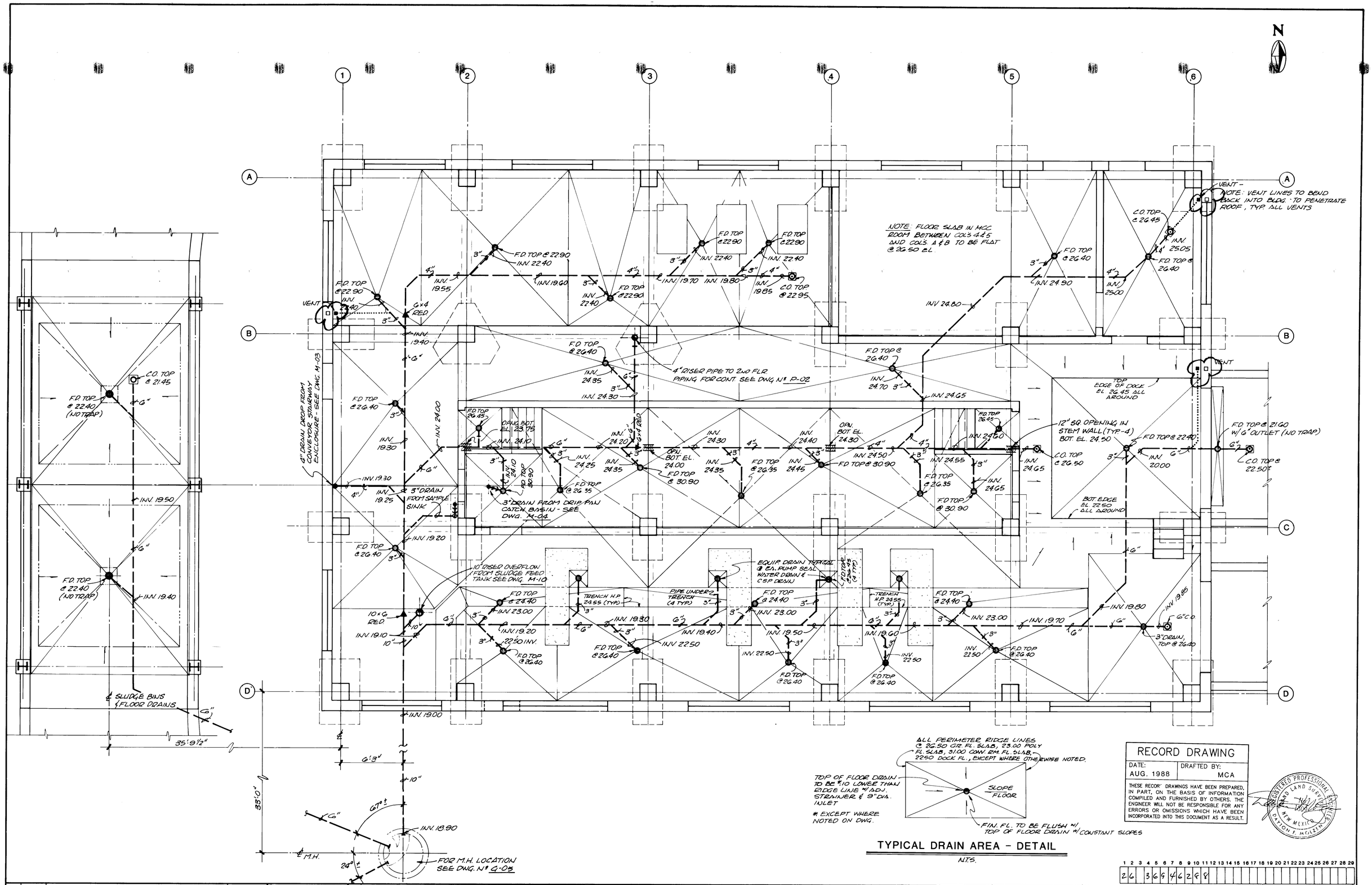

TYPICAL DRAIN AREA - DETAIL

N.T.S.

RECORD DRAWING

DATE:	DRAFTED BY:
AUG. 1988	MCA

THESE RECORD DRAWINGS HAVE BEEN PREPARED, IN PART, ON THE BASIS OF INFORMATION COMPILED AND FURNISHED BY OTHERS. THE ENGINEER WILL NOT BE RESPONSIBLE FOR ANY ERRORS OR OMISSIONS WHICH HAVE BEEN INCORPORATED INTO THIS DOCUMENT AS A RESULT.

REGISTERED PROFESSIONAL ENGINEER AND LAND SURVEYOR NEW MEXICO DAYTON F. MCLEAN

1 2 3 4 5 6 7 8 9 10 11 12 13 14 15 16 17 18 19 20 21 22 23 24 25 26 27 28 29
2 6 3 6 9 4 6 2 9 8

NO.	DATE	REVISIONS	APPROVED

DESIGNED LMR GS
DRAWN SPINELLO
CHECKED LMR
APPROVED
APPROVED
DATE

MOLZEN-CORBIN
STANLEY CONSULTANTS
A JOINT VENTURE

1/4" = 1'-0"
0 4' 6' 8'
GRAPHIC SCALE

CITY OF ALBUQUERQUE, NEW MEXICO
SOLIDS HANDLING FACILITIES
PHASE II B-3, CONTRACT 1

INTERIM SLUDGE DEWATERING FACILITIES
DEWATERING BUILDING
BUILDING PLUMBING SYSTEM - GROUND FLOOR PLAN

M-C NO. 832221
P-01
62 OF 112
SC NO.

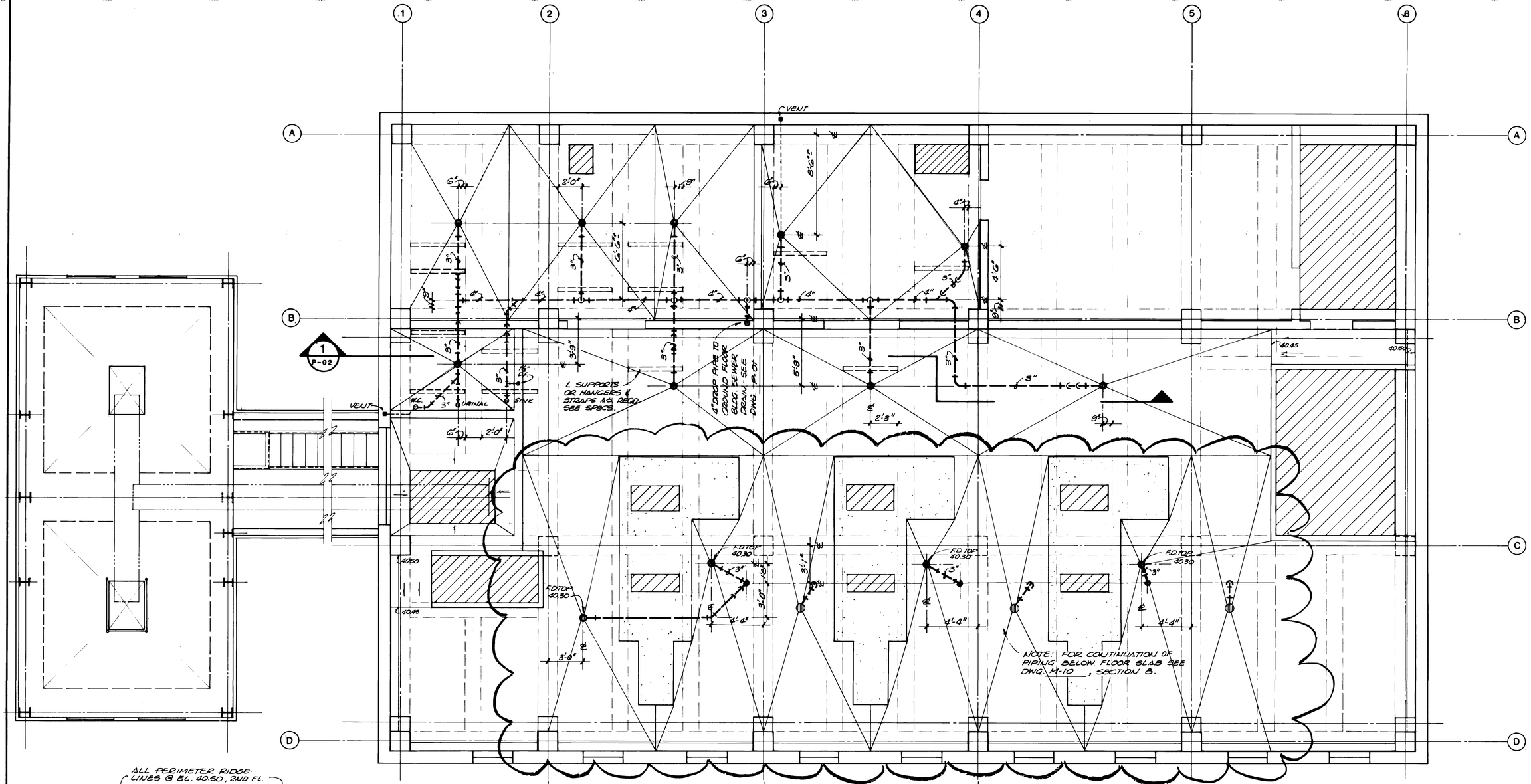

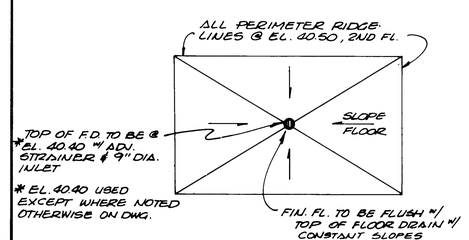

TYPICAL DRAIN AREA - DETAIL

N.T.S.

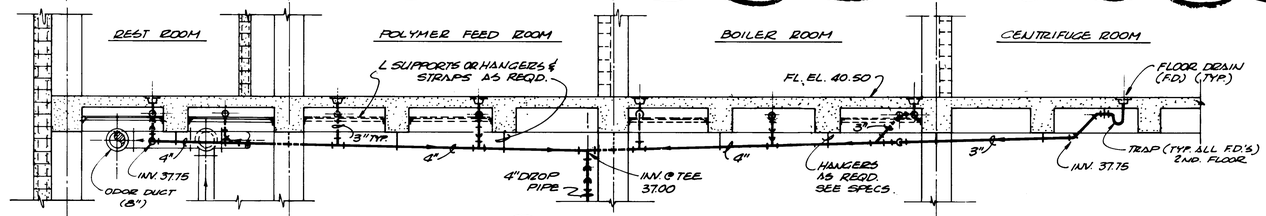

SECTION 1 / P-02

N

RECORD DRAWING

DATE: AUG. 1988 | DRAFTED BY: MCA

THESE RECORD DRAWINGS HAVE BEEN PREPARED, IN PART, ON THE BASIS OF INFORMATION COMPILED AND FURNISHED BY OTHERS. THE ENGINEER WILL NOT BE RESPONSIBLE FOR ANY ERRORS OR OMISSIONS WHICH HAVE BEEN INCORPORATED INTO THIS DOCUMENT AS A RESULT.

1 2 3 4 5 6 7 8 9 10 11 12 13 14 15 16 17 18 19 20 21 22 23 24 25 26 27 28 29
2 6 3 6 9 4 6 3 8 8

NO.	DATE	REVISIONS	APPROVED

DESIGNED LMR GS
DRAWN SANELLO
CHECKED LMR
APPROVED
APPROVED
DATE

MOLZEN-CORBIN
STANLEY CONSULTANTS
A JOINT VENTURE

1/4"=1'-0"
0 4' 6' 8'
GRAPHIC SCALE

CITY OF ALBUQUERQUE, NEW MEXICO
SOLIDS HANDLING FACILITIES
PHASE II B-3, CONTRACT 1

INTERIM SLUDGE DEWATERING FACILITIES
DEWATERING BUILDING
BUILDING PLUMBING SYSTEM - SECOND FLOOR
PLAN AND SECTION

M-C NO. 832221
P-02
63 OF 112
SC NO.

LINE SYMBOLS

- PROCESS LINE
- PROCESS FLOW ARROW
- ELECTRICAL SIGNAL
- COMPUTER SIGNAL
- PROCESS FLOW ENTERING OR LEAVING DRAWING
- SIGNAL LINE ENTERING OR LEAVING DRAWING

FLOW ELEMENTS

- FE — MAGNETIC FLOWMETER
- VENTURI

EQUIPMENT

- CENTRIFUGAL BLOWER
- SFP / PFP — POSITIVE DISPLACEMENT PUMP
- CHEMICAL SEAL
- EXPANSION JOINT
- CENTRIFUGAL PUMP

VALVES

- BALL VALVE
- GATE VALVE
- GLOBE VALVE
- PRESSURE RELIEF VALVE
- PLUG VALVE, NORMALLY OPEN
- PLUG VALVE, NORMALLY CLOSED
- QUICK COUPLER

INSTRUMENTATION

FOR DESCRIPTION, SEE TABLE BELOW

- FIELD DEVICE
- PANEL FRONT DEVICE
- PCU CRT DISPLAYED FUNCTION
- PCU SOFTWARE FUNCTION
- LOGIC INTERLOCK
- UNSPECIFIED FUNCTION

SL	STOP LOCKOUT PUSHBUTTON STATION
S/S	START-STOP PUSHBUTTON STATION
S/SL	START-STOP LOCKOUT PUSHBUTTON STATION
HOA	HAND-OFF-AUTO SELECTOR SWITCH
OP/CL	OPEN-CLOSE PUSHBUTTON STATION
OP/CL/SL	OPEN-CLOSE-STOP LOCKOUT PUSHBUTTON STATION
F/B/SL	FORWARD-BACKWARD-STOP LOCKOUT PUSHBUTTON STATION
S/N/SL	SOUTH-NORTH-STOP LOCKOUT PUSHBUTTON STATION
CCP	CENTRIFUGE CONTROL PANEL
ICP	INTERGRATED CONTROL PANEL

T/J — TYPE "J" THERMOCOUPLE

	FIRST LETTER		SUCCEEDING LETTERS		
	MEASURED OR INITIATING VARIABLE	MODIFIER	READOUT OR PASSIVE FUNCTION	OUTPUT FUNCTION	
A	ANALYSIS		ALARM		MODIFIER
B	BURNER FLAME		USER'S CHOICE	USER'S CHOICE	BACKWARD
C	CONDUCTIVITY (ELECTRICAL)			CLOSED	CONTROL
D	DENSITY (MASS) OR SPECIFIC GRAVITY	DIFFERENTIAL			
E	VOLTAGE (EMF)		PRIMARY ELEMENT		
F	FLOW RATE	RATIO (FRACTION)			FORWARD
G	GAGING (DIMENSIONAL)		GLASS		
H	HAND (MANUALLY INITIATED)				HIGH
I	CURRENT (ELECTRICAL)		INDICATE		
J	POWER	SCAN			
K	TIME OR TIME - SCHEDULE				
L	LEVEL		LIGHT (PILOT)		LOW
M	MOTOR				
N	INDICATOR				
O	USER'S CHOICE		ORIFICE (RESTRICTION)	OPEN	
P	PRESSURE OR VACUUM		POINT (TEST CONNECTION)		
Q	QUANTITY OR EVENT	INTEGRATE OR TOTALIZE			
R	RADIOACTIVITY		RECORD OR PRINT		RUN
S	SPEED OR FREQUENCY	SAFETY		SWITCH	STOP
T	TEMPERATURE			TRANSMIT	TRANSDUCER (CONVERTER)
U	MULTIVARIABLE		MULTIFUNCTION	MULTIFUNCTION	MULTIFUNCTION
V	VIBRATION			VALVE, DAMPER, OR LOUVER	
W	TORQUE		WELL		
X	UNCLASSIFIED			UNCLASSIFIED	
Y	USER'S CHOICE			RELAY OR COMPUTE	
Z	POSITION			DRIVE, ACTUATE OR UNCLASSIFIED FINAL CONTROL ELEMENT	

RECORD DRAWING

DATE: AUG. 1988 | DRAFTED BY: MCA

THESE RECORD DRAWINGS HAVE BEEN PREPARED, IN PART, ON THE BASIS OF INFORMATION COMPILED AND FURNISHED BY OTHERS. THE ENGINEER WILL NOT BE RESPONSIBLE FOR ANY ERRORS OR OMISSIONS WHICH HAVE BEEN INCORPORATED INTO THIS DOCUMENT AS A RESULT.

STEVEN E. SORENSON — NEW MEXICO — 6570 — REGISTERED PROFESSIONAL ENGINEER

1 2 3 4 5 6 7 8 9 10 11 12 13 14 15 16 17 18 19 20 21 22 23 24 25 26 27 28 29
2 6 3 6 9 4 6 4 8 8

NO.	DATE	REVISIONS	APPROVED

DESIGNED SS
DRAWN STAFF
CHECKED
APPROVED
APPROVED
DATE 5-85

MOLZEN-CORBIN
STANLEY CONSULTANTS
A JOINT VENTURE

NONE
GRAPHIC SCALE

CITY OF ALBUQUERQUE, NEW MEXICO
SOLIDS HANDLING FACILITIES
PHASE II B-3, CONTRACT 1

INTERIM SLUDGE DEWATERING FACILITIES
INSTRUMENTATION LEGEND

M-C NO. 832221
I-01
64 of 112
SC NO.

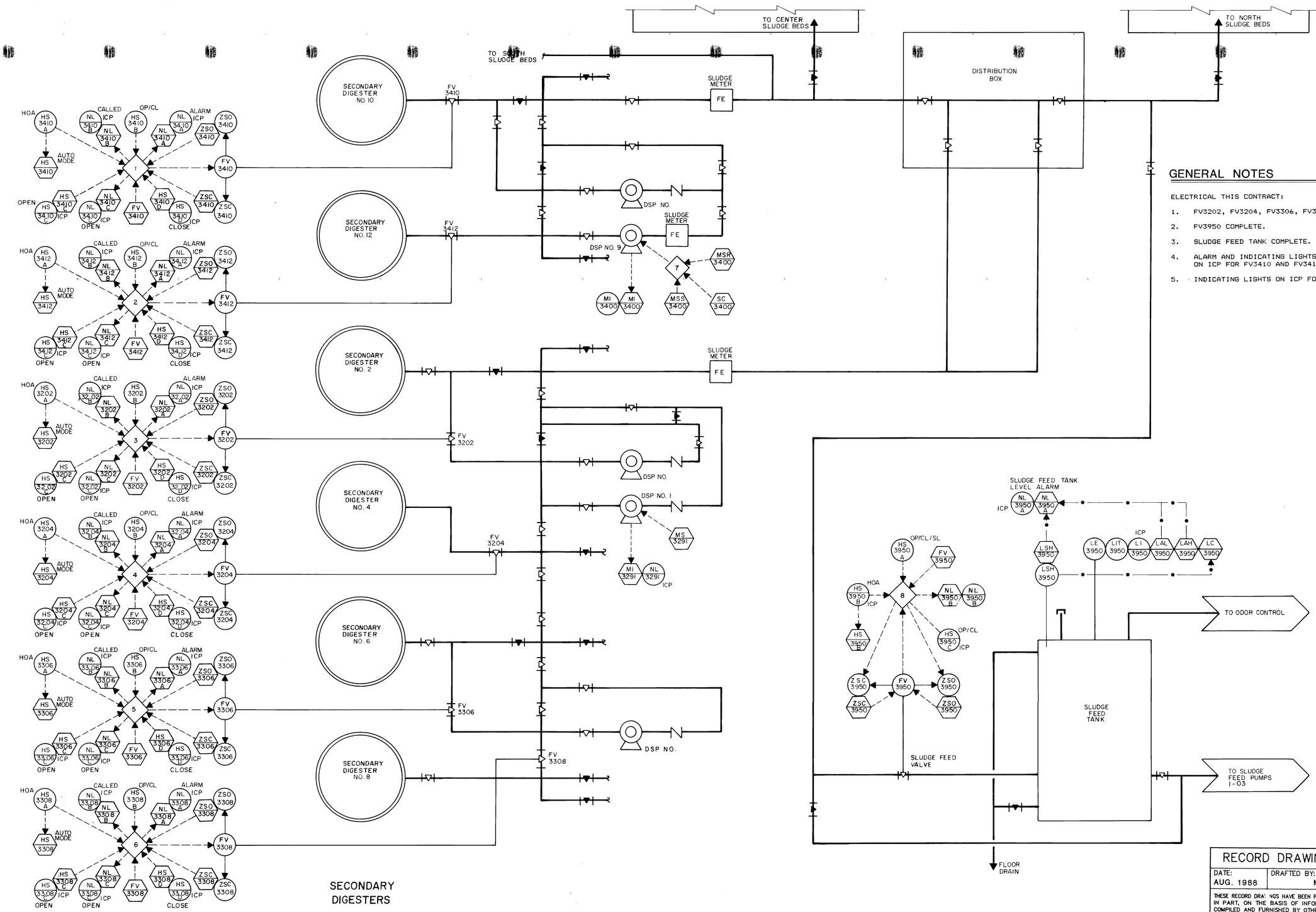

GENERAL NOTES

ELECTRICAL THIS CONTRACT:

1. FV3202, FV3204, FV3306, FV3308: COMPLETE.
2. FV3950 COMPLETE.
3. SLUDGE FEED TANK COMPLETE.
4. ALARM AND INDICATING LIGHTS AND OPEN/CLOSE PUSHBUTTONS ON ICP FOR FV3410 AND FV3412.
5. INDICATING LIGHTS ON ICP FOR DSP NO. 1 AND DSP NO. 9.

RECORD DRAWING

DATE:	DRAFTED BY:
AUG. 1988	MCA

THESE RECORD DRAWINGS HAVE BEEN PREPARED, IN PART, ON THE BASIS OF INFORMATION COMPILED AND FURNISHED BY OTHERS. THE ENGINEER WILL NOT BE RESPONSIBLE FOR ANY ERRORS OR OMISSIONS WHICH HAVE BEEN INCORPORATED INTO THIS DOCUMENT AS A RESULT.

STEVEN E. SORENSON NEW MEXICO 6570 REGISTERED PROFESSIONAL ENGINEER

1 2 3 4 5 6 7 8 9 10 11 12 13 14 15 16 17 18 19 20 21 22 23 24 25 26 27 28 29
2 6 3 6 9 4 6 5 8 8

NO.	DATE	REVISIONS	APPROVED

DESIGNED SS
DRAWN G. DENSMORE
CHECKED
APPROVED
APPROVED
DATE 5-85

MOLZEN-CORBIN
STANLEY CONSULTANTS
A JOINT VENTURE

NONE
GRAPHIC SCALE

CITY OF ALBUQUERQUE, NEW MEXICO
SOLIDS HANDLING FACILITIES
PHASE II B-3, CONTRACT 1

INTERIM SLUDGE DEWATERING FACILITIES
P&ID SLUDGE SUPPLY

M-C NO. 832221
I-02
SC NO.
65 OF 112

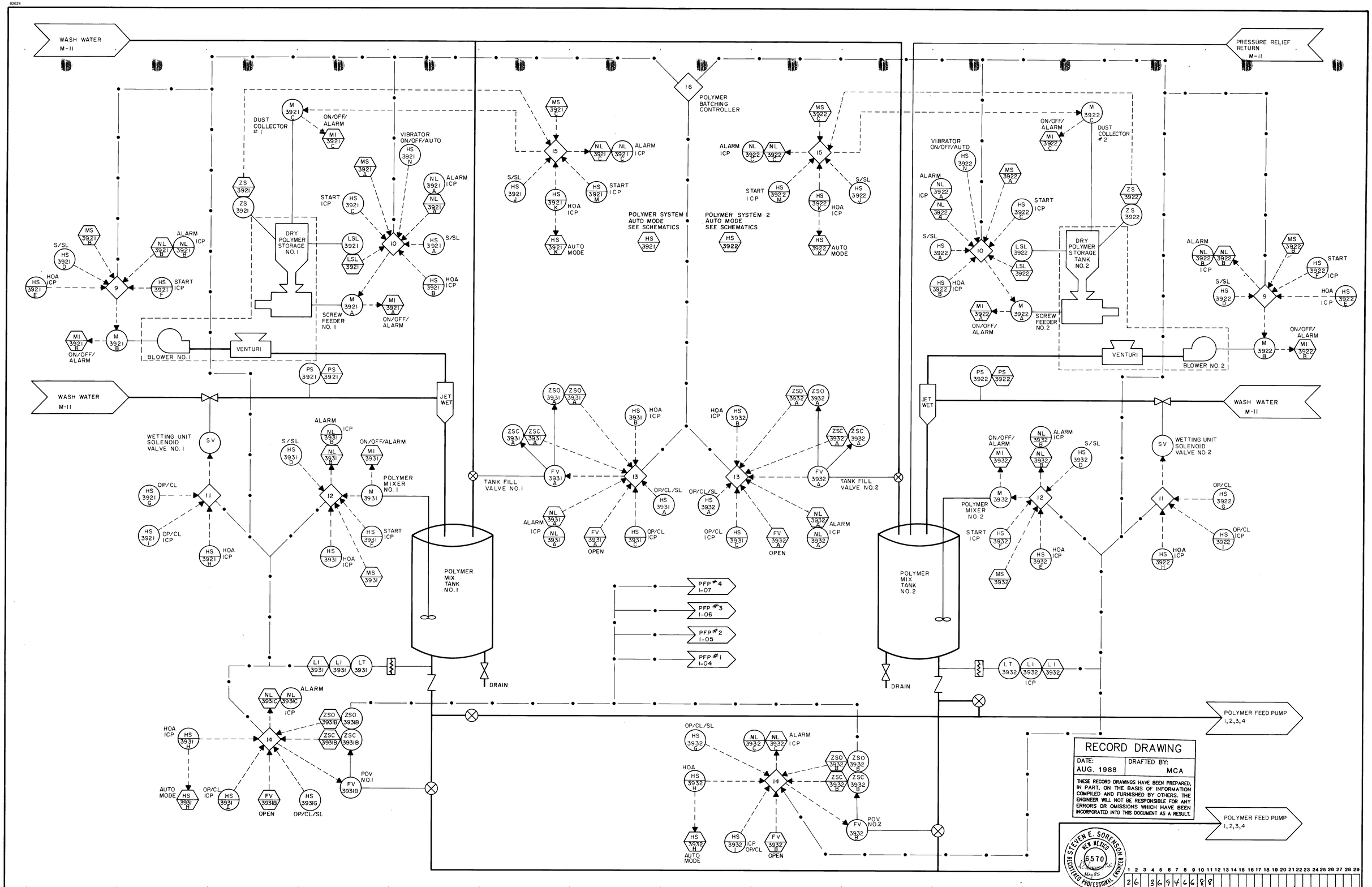

NO.	DATE	REVISIONS	APPROVED

DESIGNED SS
DRAWN G. DENSMORE
CHECKED
APPROVED
APPROVED
DATE 5-85

MOLZEN-CORBIN
STANLEY CONSULTANTS
A JOINT VENTURE

NONE
GRAPHIC SCALE

CITY OF ALBUQUERQUE, NEW MEXICO
SOLIDS HANDLING FACILITIES
PHASE II B-3, CONTRACT 1

INTERIM SLUDGE DEWATERING FACILITIES
P & ID POLYMER SUPPLY

M-C NO. 832221
I-03
66 OF 112
SC NO.

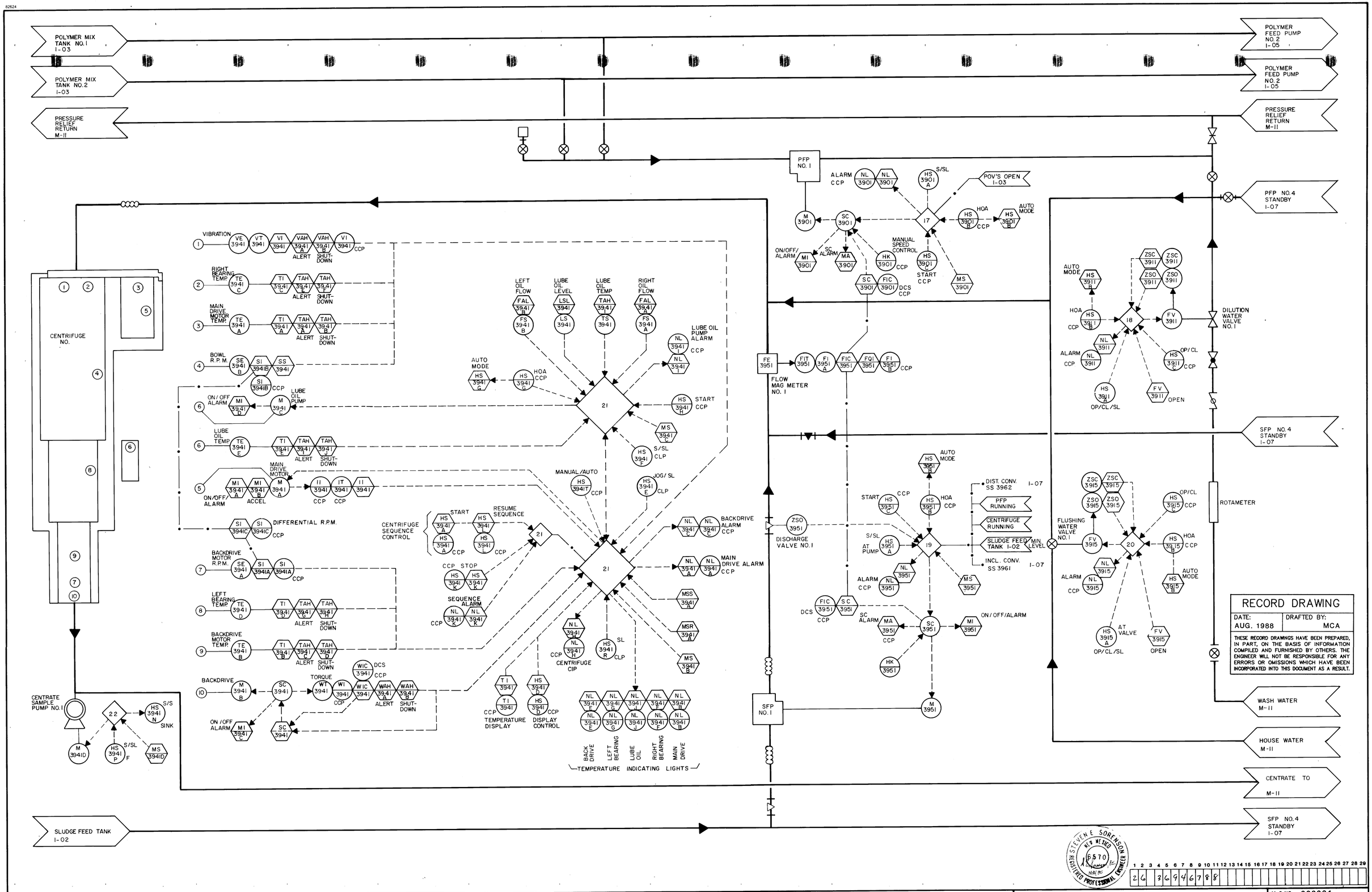

NO.	DATE	REVISIONS	APPROVED

DESIGNED SS
DRAWN G. DENSMORE
CHECKED
APPROVED
APPROVED
DATE 5-85

MOLZEN-CORBIN
STANLEY CONSULTANTS
A JOINT VENTURE

NONE
GRAPHIC SCALE

CITY OF ALBUQUERQUE, NEW MEXICO
SOLIDS HANDLING FACILITIES
PHASE II B-3, CONTRACT 1

INTERIM SLUDGE DEWATERING FACILITIES
P&ID CENTRIFUGE NO. 1

M-C NO. 832221
I-04
67 OF 112
SC NO.

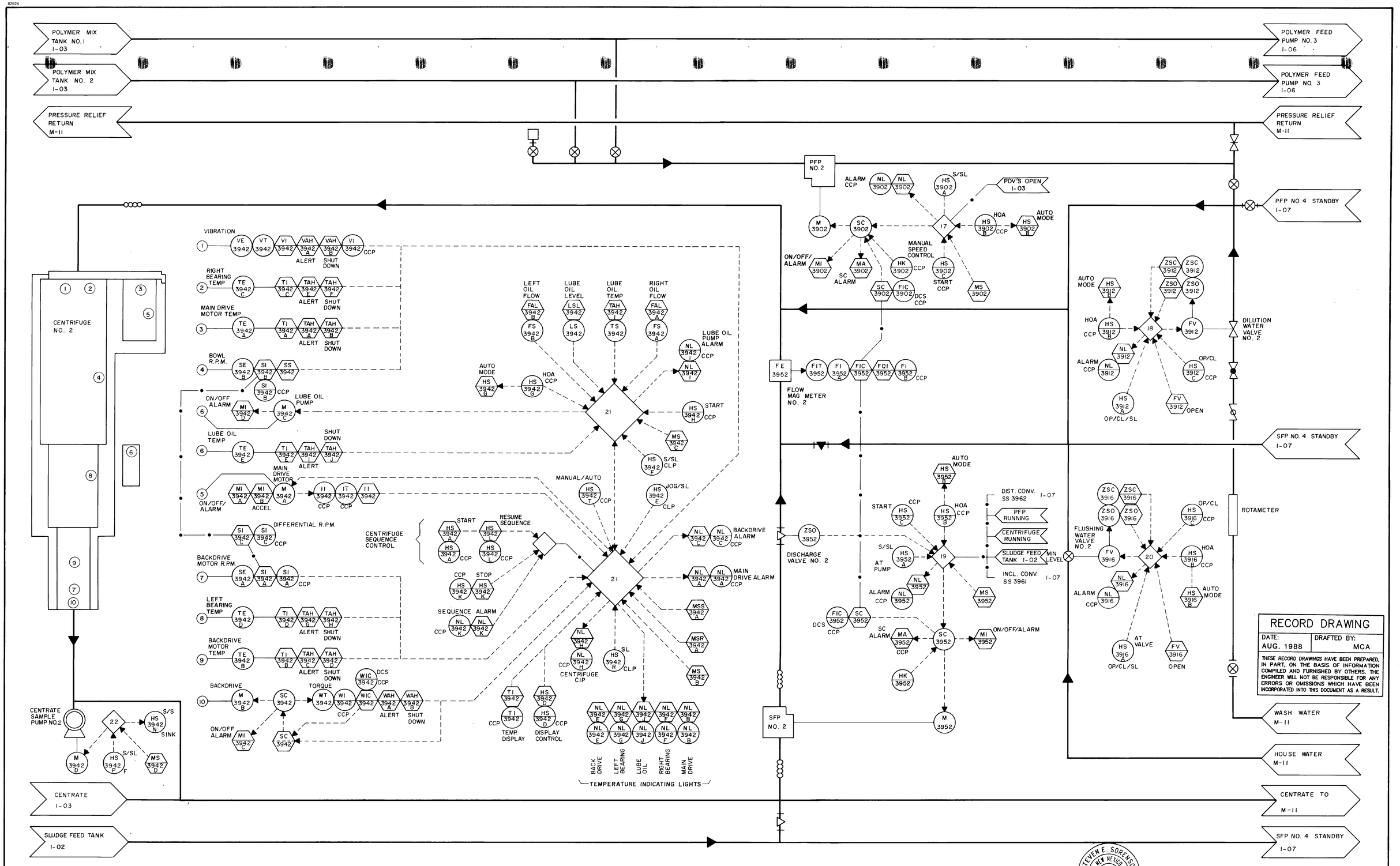

RECORD DRAWING

DATE: AUG. 1988 | DRAFTED BY: MCA

THESE RECORD DRAWINGS HAVE BEEN PREPARED, IN PART, ON THE BASIS OF INFORMATION COMPILED AND FURNISHED BY OTHERS. THE ENGINEER WILL NOT BE RESPONSIBLE FOR ANY ERRORS OR OMISSIONS WHICH HAVE BEEN INCORPORATED INTO THIS DOCUMENT AS A RESULT.

STEVEN E. SORENSON — NEW MEXICO — 6570 — REGISTERED PROFESSIONAL ENGINEER — MAY 86

24 3 6 9 4 6 8 8

NO.	DATE	REVISIONS	APPROVED

DESIGNED SS
DRAWN STAFF
CHECKED
APPROVED
APPROVED
DATE 5-85

MOLZEN-CORBIN
STANLEY CONSULTANTS
A JOINT VENTURE

NONE
GRAPHIC SCALE

CITY OF ALBUQUERQUE, NEW MEXICO
SOLIDS HANDLING FACILITIES
PHASE II B-3, CONTRACT 1

INTERIM SLUDGE DEWATERING FACILITIES
P & ID CENTRIFUGE NO. 2

M-C NO. 832221
I-05
68 OF 112
SC NO.

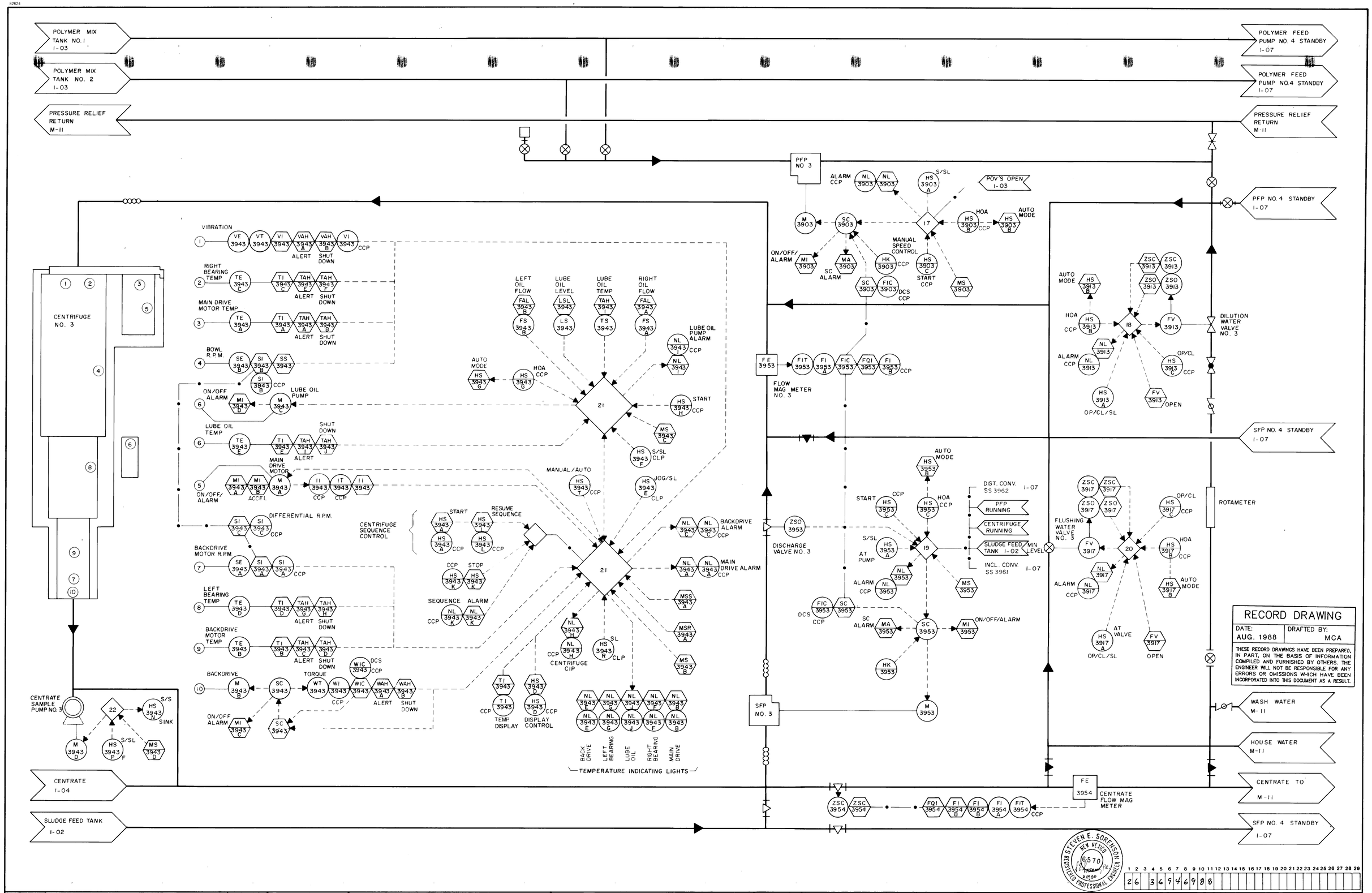

NO.	DATE	REVISIONS	APPROVED

DESIGNED SS
DRAWN STAFF
CHECKED
APPROVED
APPROVED
DATE 5-85

MOLZEN-CORBIN
STANLEY CONSULTANTS
A JOINT VENTURE

NONE
GRAPHIC SCALE

CITY OF ALBUQUERQUE, NEW MEXICO
SOLIDS HANDLING FACILITIES
PHASE II B-3, CONTRACT 1

INTERIM SLUDGE DEWATERING FACILITIES
P & ID CENTRIFUGE NO. 3

M-C NO. 832221
I-06
69 OF 112
SC NO.

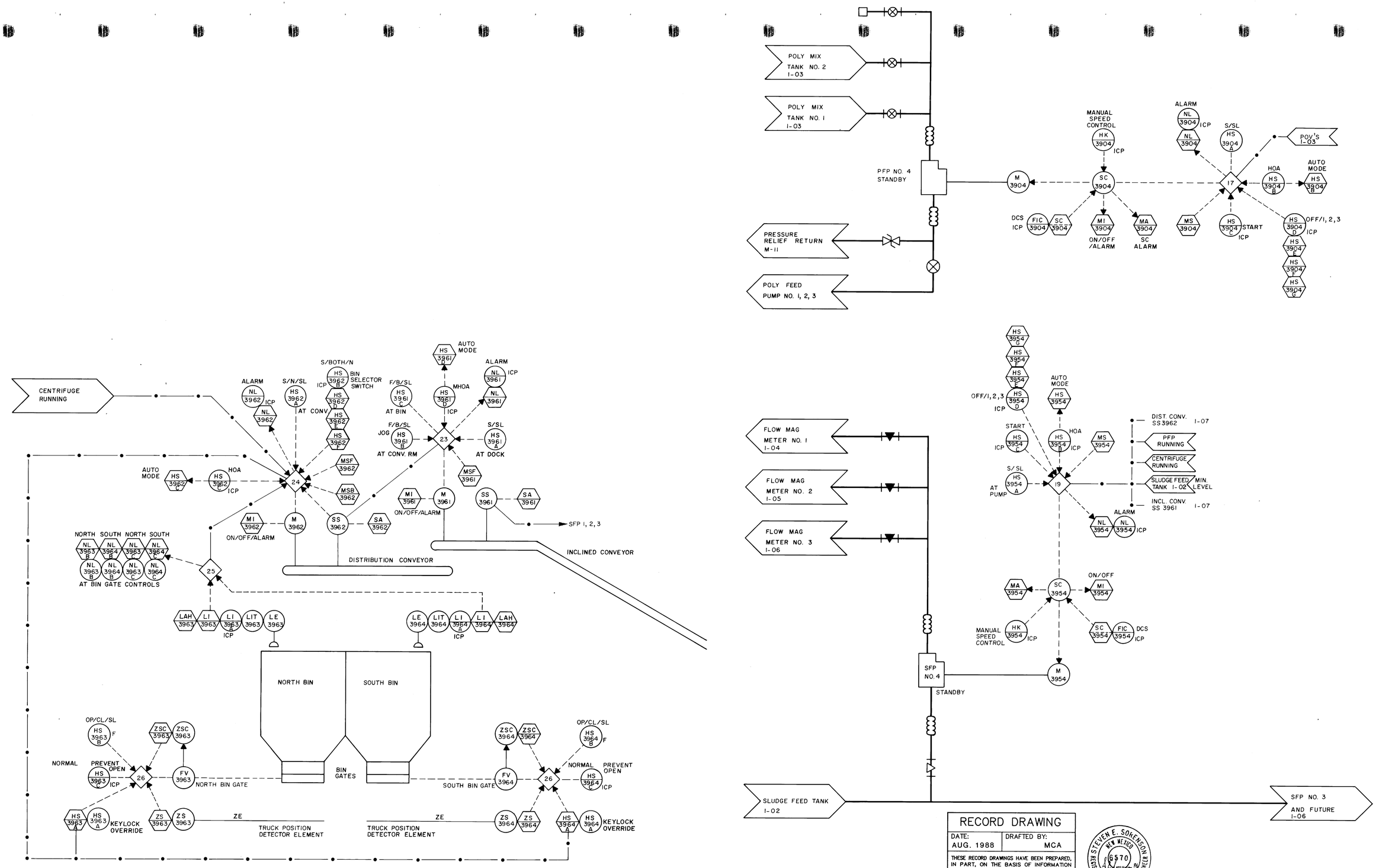

RECORD DRAWING

DATE:	DRAFTED BY:
AUG. 1988	MCA

THESE RECORD DRAWINGS HAVE BEEN PREPARED, IN PART, ON THE BASIS OF INFORMATION COMPILED AND FURNISHED BY OTHERS. THE ENGINEER WILL NOT BE RESPONSIBLE FOR ANY ERRORS OR OMISSIONS WHICH HAVE BEEN INCORPORATED INTO THIS DOCUMENT AS A RESULT.

STEVEN E. SORENSON — NEW MEXICO — 6570 — REGISTERED PROFESSIONAL ENGINEER — 5-85

1 2 3 4 5 6 7 8 9 10 11 12 13 14 15 16 17 18 19 20 21 22 23 24 25 26 27 28 29
26 3 6 9 4 7 0 8 8

NO.	DATE	REVISIONS	APPROVED

DESIGNED SS
DRAWN STAFF
CHECKED
APPROVED
APPROVED
DATE 5-85

MOLZEN-CORBIN
STANLEY CONSULTANTS
A JOINT VENTURE

NONE
GRAPHIC SCALE

CITY OF ALBUQUERQUE, NEW MEXICO
SOLIDS HANDLING FACILITIES
PHASE II B-3, CONTRACT 1

INTERIM SLUDGE DEWATERING FACILITIES
P&ID STORAGE BINS AND STANDBY PUMPS

M-C NO. 832221
I-07
70 of 112
SC NO.

82624

DEWATERING BLDG.-PROCESS AREA	DEWATERING ICP	PCU I/O

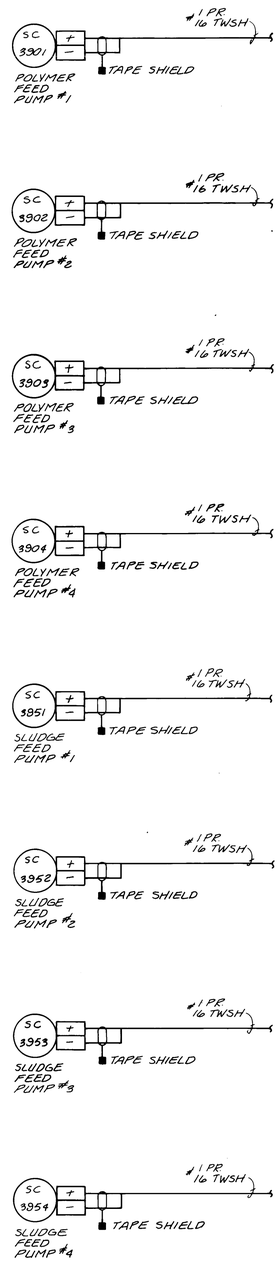

DEWATERING BLDG.-PROCESS AREA	DEWATERING ICP	PCU I/O

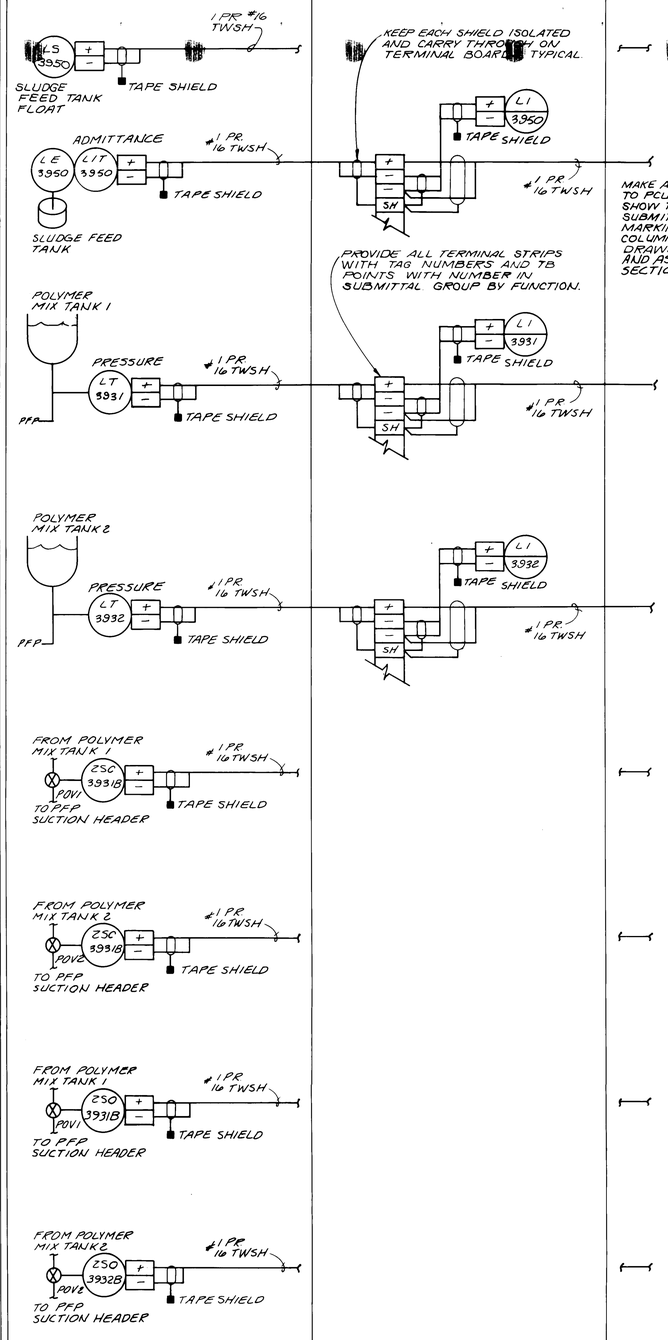

DEWATERING BLDG.-PROCESS AREA	DEWATERING ICP	PCU I/O

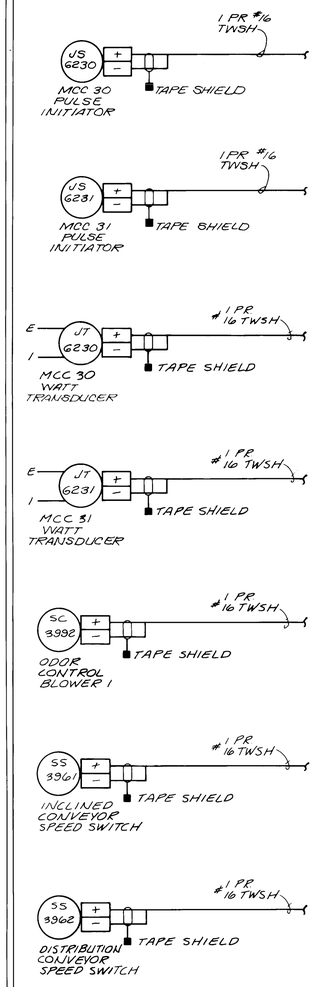

RECORD DRAWING	
DATE: AUG. 1988	DRAFTED BY: MCA

THESE RECORD DRAWINGS HAVE BEEN PREPARED, IN PART, ON THE BASIS OF INFORMATION COMPILED AND FURNISHED BY OTHERS. THE ENGINEER WILL NOT BE RESPONSIBLE FOR ANY ERRORS OR OMISSIONS WHICH HAVE BEEN INCORPORATED INTO THIS DOCUMENT AS A RESULT.

STEVEN E. SORENSON NEW MEXICO 6570 REGISTERED PROFESSIONAL ENGINEER

1 2 3 4 5 6 7 8 9 10 11 12 13 14 15 16 17 18 19 20 21 22 23 24 25 26 27 28 29
2 6 3 6 9 4 7 1 8 8

NO.	DATE	REVISIONS	APPROVED

DESIGNED SS
DRAWN STAFF
CHECKED
APPROVED
APPROVED
DATE 5-85

MOLZEN-CORBIN
STANLEY CONSULTANTS
A JOINT VENTURE

NONE
GRAPHIC SCALE

CITY OF ALBUQUERQUE, NEW MEXICO
SOLIDS HANDLING FACILITIES
PHASE II B-3, CONTRACT 1

INTERIM SLUDGE DEWATERING FACILITIES
LOOP DIAGRAMS

M-C NO. 832221
I-08
71 OF 112
SC NO.

82624

DEWATERING BLDG - PROCESS AREA | DEWATERING ICP | PCU 1/0

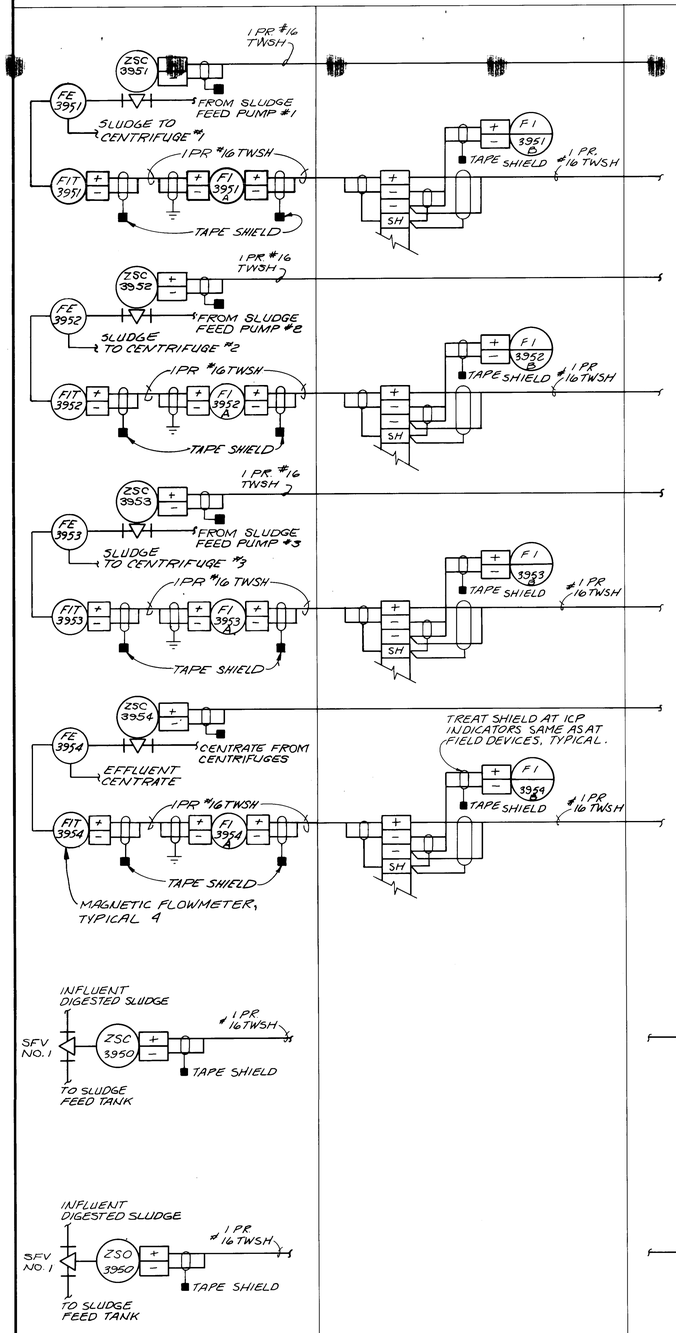

DEWATERING BLDG - PROCESS AREA | DEWATERING ICP | PCU 1/0

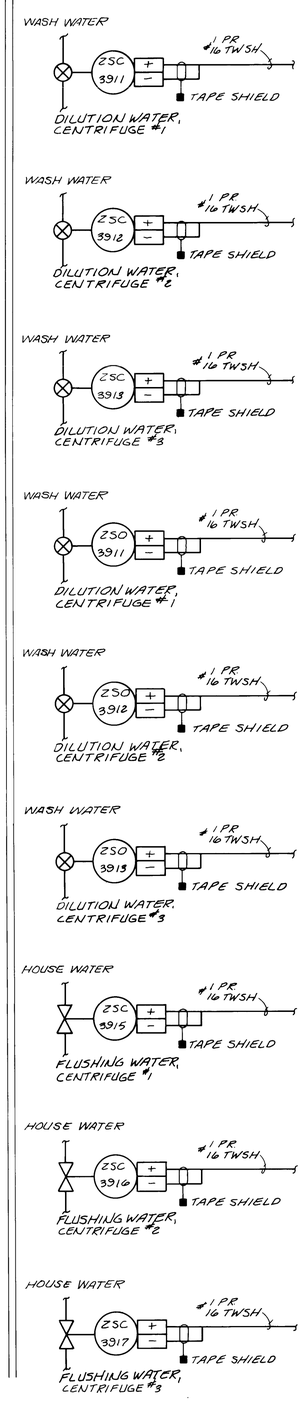

DEWATERING BLDG - PROCESS AREA | DEWATERING ICP | PCU 1/0

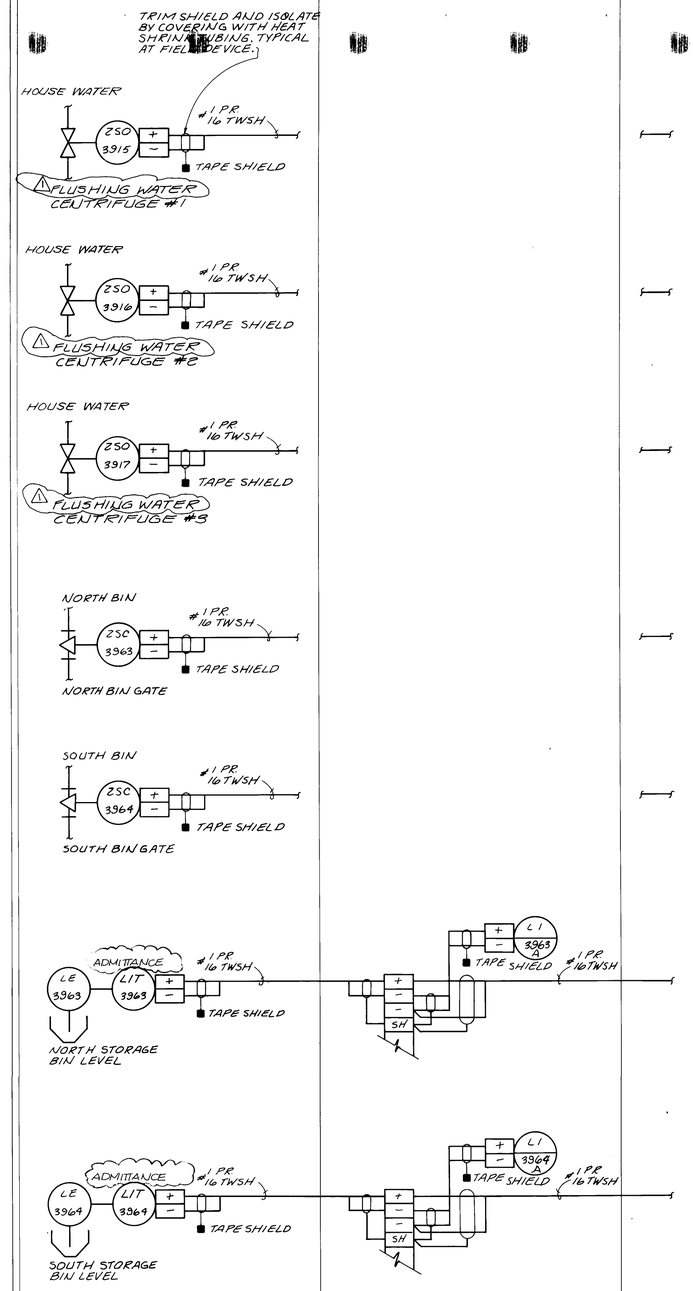

RECORD DRAWING

DATE:	DRAFTED BY:
AUG. 1988	MCA

THESE RECORD DRAWINGS HAVE BEEN PREPARED, IN PART, ON THE BASIS OF INFORMATION COMPILED AND FURNISHED BY OTHERS. THE ENGINEER WILL NOT BE RESPONSIBLE FOR ANY ERRORS OR OMISSIONS WHICH HAVE BEEN INCORPORATED INTO THIS DOCUMENT AS A RESULT.

STEVEN E. SORENSON NEW MEXICO 6570 REGISTERED PROFESSIONAL ENGINEER MAY 86

1 2 3 4 5 6 7 8 9 10 11 12 13 14 15 16 17 18 19 20 21 22 23 24 25 26 27 28 29

2 6 | 3 6 9 4 7 2 8 8

NO.	DATE	REVISIONS	APPROVED
1	7-23-85	ZSO TITLE CHANGES	

DESIGNED SS
DRAWN STAFF
CHECKED
APPROVED
APPROVED
DATE 5-85

MOLZEN-CORBIN
STANLEY CONSULTANTS
A JOINT VENTURE

NONE
GRAPHIC SCALE

CITY OF ALBUQUERQUE, NEW MEXICO
SOLIDS HANDLING FACILITIES
PHASE II B-3, CONTRACT 1

INTERIM SLUDGE DEWATERING FACILITIES
LOOP DIAGRAMS

M-C NO. 832221
I-09
72 OF 112
SC NO.

82624

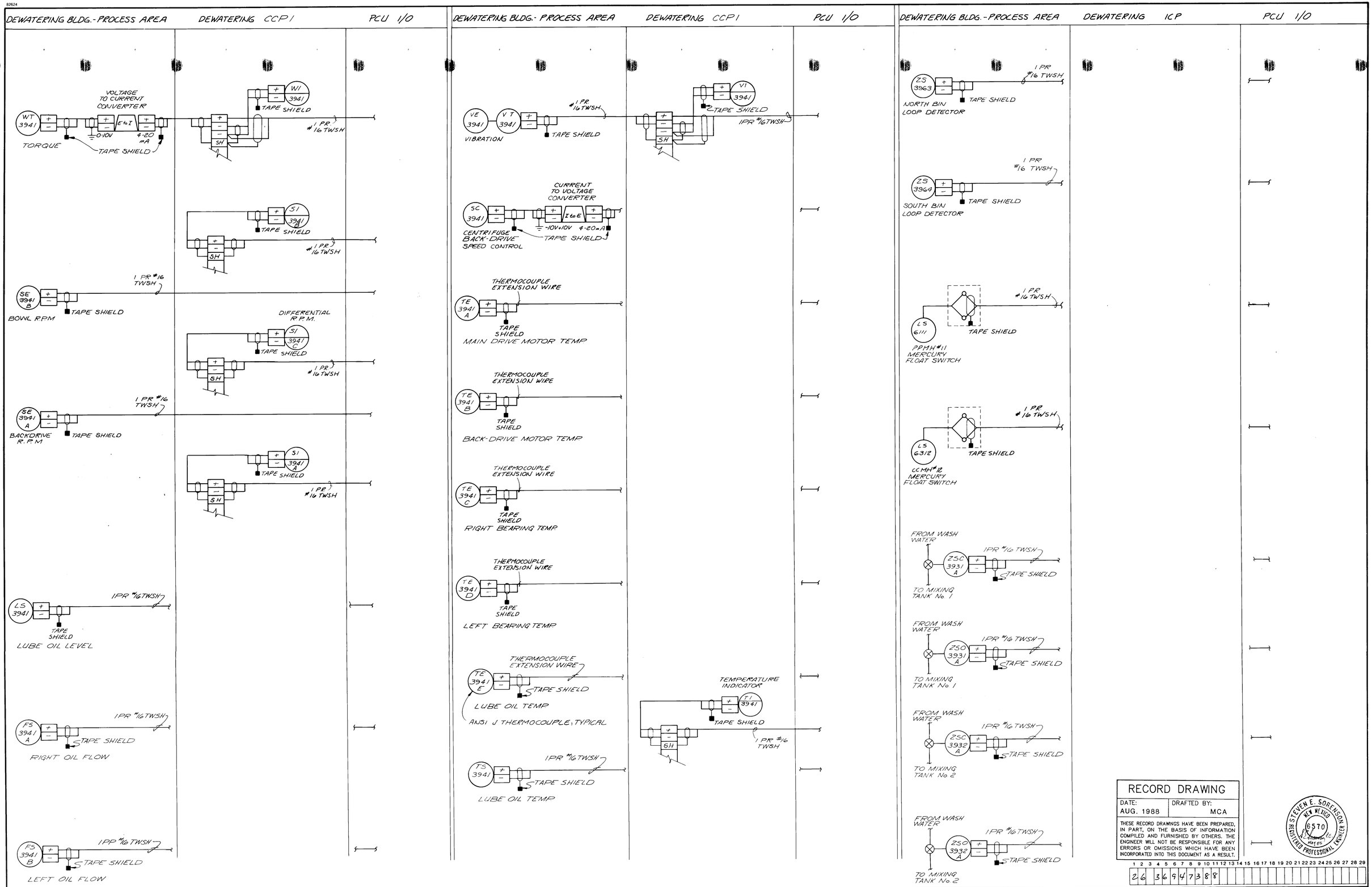

RECORD DRAWING

DATE:	DRAFTED BY:
AUG. 1988	MCA

THESE RECORD DRAWINGS HAVE BEEN PREPARED, IN PART, ON THE BASIS OF INFORMATION COMPILED AND FURNISHED BY OTHERS. THE ENGINEER WILL NOT BE RESPONSIBLE FOR ANY ERRORS OR OMISSIONS WHICH HAVE BEEN INCORPORATED INTO THIS DOCUMENT AS A RESULT.

STEVEN E. SORENSON NEW MEXICO 6570 REGISTERED PROFESSIONAL ENGINEER MAY 05

1 2 3 4 5 6 7 8 9 10 11 12 13 14 15 16 17 18 19 20 21 22 23 24 25 26 27 28 29
2 6 3 6 9 4 7 3 8 8

NO.	DATE	REVISIONS	APPROVED

DESIGNED SS
DRAWN STAFF
CHECKED
APPROVED
APPROVED
DATE 5-85

MOLZEN-CORBIN
STANLEY CONSULTANTS
A JOINT VENTURE

NONE
GRAPHIC SCALE

CITY OF ALBUQUERQUE, NEW MEXICO
SOLIDS HANDLING FACILITIES
PHASE II B-3, CONTRACT 1

INTERIM SLUDGE DEWATERING FACILITIES
LOOP DIAGRAMS

M-C NO 832221
I-10
73 of 112
SC NO.

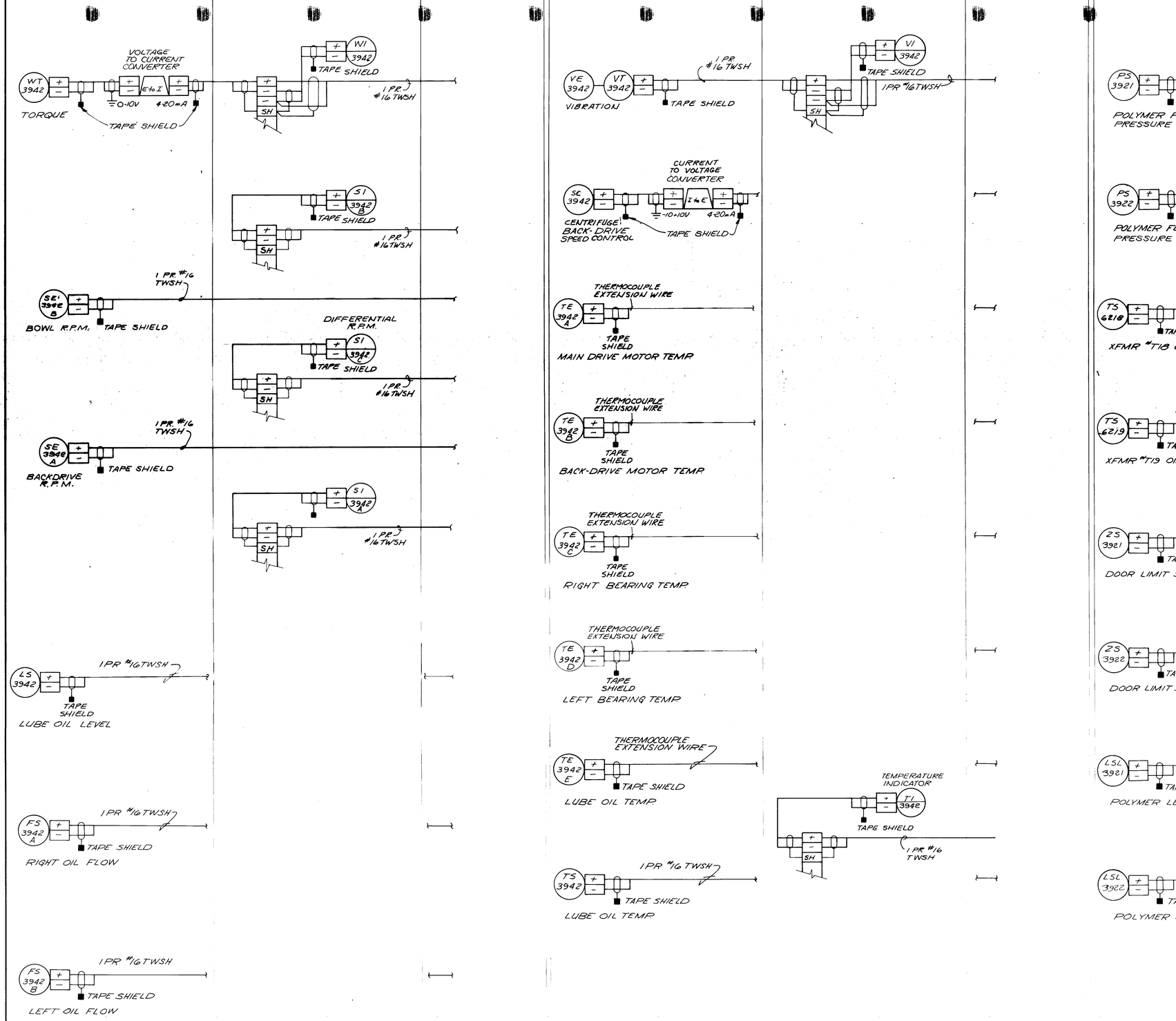

DEWATERING BLDG.-PROCESS AREA DEWATERING CCP2 PCU 1/O

DEWATERING BLDG-PROCESS AREA PCU-I/O

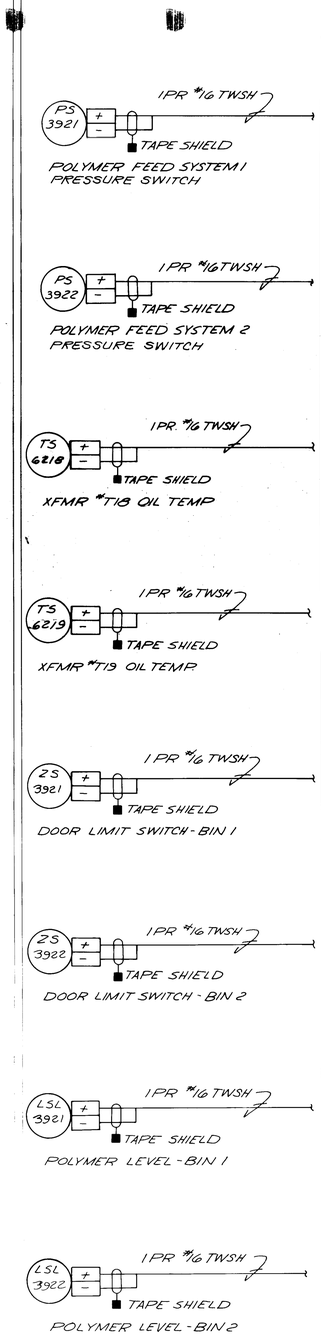

RECORD DRAWING

DATE: AUG. 1988	DRAFTED BY: MCA

THESE RECORD DRAWINGS HAVE BEEN PREPARED, IN PART, ON THE BASIS OF INFORMATION COMPILED AND FURNISHED BY OTHERS. THE ENGINEER WILL NOT BE RESPONSIBLE FOR ANY ERRORS OR OMISSIONS WHICH HAVE BEEN INCORPORATED INTO THIS DOCUMENT AS A RESULT.

STEVEN E. SORENSON NEW MEXICO 16570 REGISTERED PROFESSIONAL ENGINEER

26 36947488

NO	DATE	REVISIONS	APPROVED

DESIGNED JS
DRAWN STAFF
CHECKED
APPROVED
APPROVED
DATE 5-85

MOLZEN-CORBIN
STANLEY CONSULTANTS
A JOINT VENTURE

NONE
GRAPHIC SCALE

CITY OF ALBUQUERQUE, NEW MEXICO
SOLIDS HANDLING FACILITIES
PHASE II B- 3, CONTRACT 1

INTERIM SLUDGE DEWATERING FACILITIES
LOOP DIAGRAMS

M-C NO. 832221
I-11
74 OF 112
SC NO.

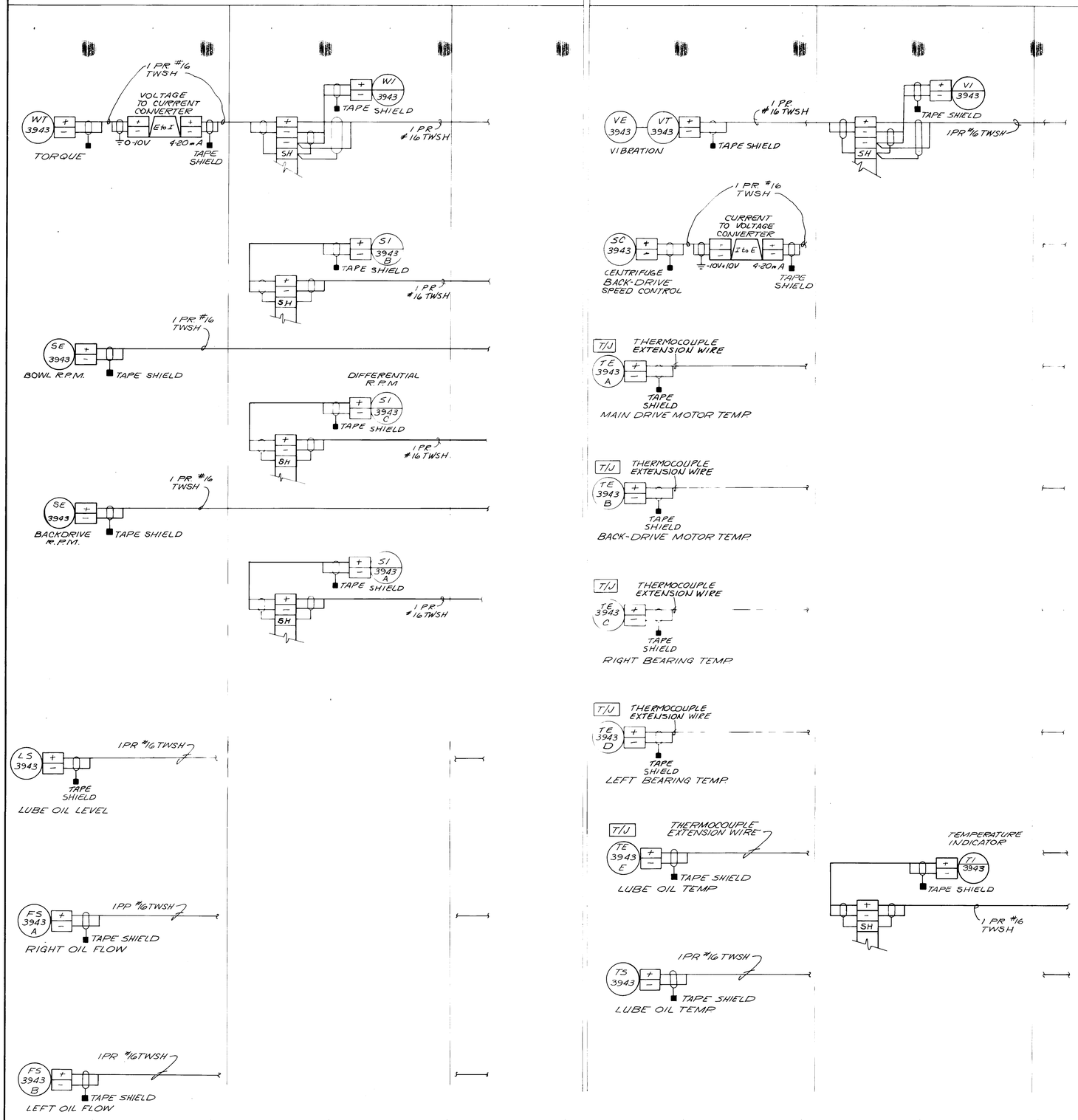

RECORD DRAWING

DATE: AUG. 1988	DRAFTED BY: MCA

THESE RECORD DRAWINGS HAVE BEEN PREPARED, IN PART, ON THE BASIS OF INFORMATION COMPILED AND FURNISHED BY OTHERS. THE ENGINEER WILL NOT BE RESPONSIBLE FOR ANY ERRORS OR OMISSIONS WHICH HAVE BEEN INCORPORATED INTO THIS DOCUMENT AS A RESULT.

STEVEN E. SORENSON NEW MEXICO 6570 REGISTERED PROFESSIONAL ENGINEER 5-85

1 2 3 4 5 6 7 8 9 10 11 12 13 14 15 16 17 18 19 20 21 22 23 24 25 26 27 28 29
26 36947588

NO.	DATE	REVISIONS	APPROVED

DESIGNED SS
DRAWN STAFF
CHECKED
APPROVED
APPROVED
DATE 5-85

MOLZEN-CORBIN
STANLEY CONSULTANTS
A JOINT VENTURE

NONE
GRAPHIC SCALE

CITY OF ALBUQUERQUE, NEW MEXICO
SOLIDS HANDLING FACILITIES
PHASE II B-3, CONTRACT 1

INTERIM SLUDGE DEWATERING FACILITIES
LOOP DIAGRAMS

M-C NO. 832221
I-12
75 OF 112
SC NO.

82624

DIGESTER AREA — PCU - I/O

DIGESTER NO. 2

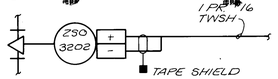

DIGESTER NO. 2

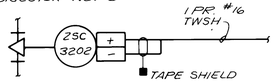

DIGESTER NO. 4

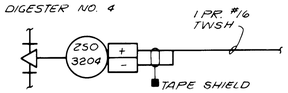

DIGESTER NO. 4

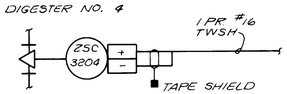

DIGESTER NO 6

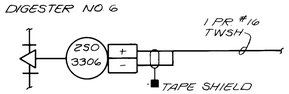

DIGESTER NO. 6

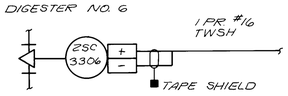

DIGESTER NO. 8

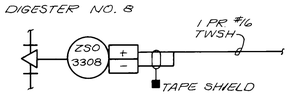

DIGESTER NO. 8

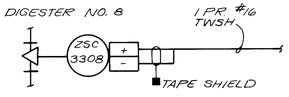

DIGESTER AREA — PCU - I/O

DIGESTER NO. 10

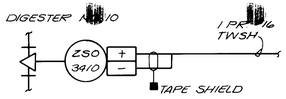

DIGESTER NO. 10

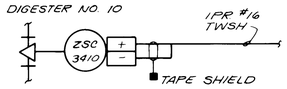

DIGESTER NO. 12

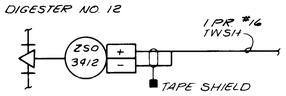

DIGESTER NO. 12

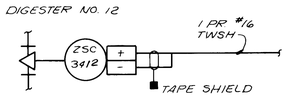

RECORD DRAWING

DATE:	DRAFTED BY:
AUG. 1988	MCA

THESE RECORD DRAWINGS HAVE BEEN PREPARED, IN PART, ON THE BASIS OF INFORMATION COMPILED AND FURNISHED BY OTHERS. THE ENGINEER WILL NOT BE RESPONSIBLE FOR ANY ERRORS OR OMISSIONS WHICH HAVE BEEN INCORPORATED INTO THIS DOCUMENT AS A RESULT.

STEVEN E. SORENSON NEW MEXICO 6570 5-85 REGISTERED PROFESSIONAL ENGINEER

1 2 3 4 5 6 7 8 9 10 11 12 13 14 15 16 17 18 19 20 21 22 23 24 25 26 27 28 29

26 3 6 9 4 7 6 8 8

NO.	DATE	REVISIONS	APPROVED

DESIGNED SS
DRAWN STAFF
CHECKED
APPROVED
APPROVED
DATE 5-85

MOLZEN-CORBIN
STANLEY CONSULTANTS
A JOINT VENTURE

NONE
GRAPHIC SCALE

CITY OF ALBUQUERQUE, NEW MEXICO
SOLIDS HANDLING FACILITIES
PHASE II B-3, CONTRACT 1

INTERIM SLUDGE DEWATERING FACILITIES
LOOP DIAGRAMS

M-C NO. 832221
I-13
SC NO.
76 OF 112

NOTES

1. 1/2" PVC RMC WITH CABLE BY METER MANUFACTURER. DO NOT COMBINE.
2. MOUNT ON CEILING.
3. WP ENCLOSURE AND TWO AMPLIFIERS FOR LOOP DETECTORS. MOUNT ON UNISTRUT ON SIDE OF PLATFORM, WITH DOOR CONVENIENTLY ACCESSIBLE FROM PLATFORM FOR MAINTENANCE.
4. LOOP FOR ZS 3963.
5. LOOP FOR ZS 3964.
6. EQUIPMENT, INSTALLATION AND TESTING SHALL BE IN ACCORDANCE WITH SECTION 713 OF THE NEW MEXICO STATE HIGHWAY DEPARTMENT STANDARD SPECIFICATION FOR ROAD AND BRIDGE CONSTRUCTION - 1984.
7. FACE WEST. MOUNT 100" CENTERLINE ABOVE DRIVE PAD.
8. SEE ENCLOSURE DETAIL ON SHEET E-15.
9. MOUNT 60" ABOVE FINISHED FLOOR.
10. 24VDC PILOT, GREEN, ALLEN-BRADLEY 800H-QR24G.
11. BACKDRIVE 2 SIGNAL CONVERTERS, 2 INTERPOSING RELAYS, TERMINAL BOARDS, 5 NP (MAIN = BACKDRIVE INTERFACE X, TAG # FOR EACH COMPONENT), NEMA 12 ENCLOSURE. FOR DETAIL SEE SHEET E-14.
12. USE FOR DCS CABLES.

GENERAL NOTES

1. INSTALL NEC 500 GAS SEALS ON ALL CONDUITS PENETRATING THE ENVELOPE OF THE CONVEYOR ROOM AND/OR BIN AREA. FILL WITH NON-HARDENING SEALER.
2. WHERE WIREWAYS ENTER BOTTOM OF PCU, CCP, ICP, SEAL BETWEEN CONCRETE AND WIREWAY WITH SILICONE SEAL AND BETWEEN CABLES AND WIREWAY WITH DUCT SEAL.

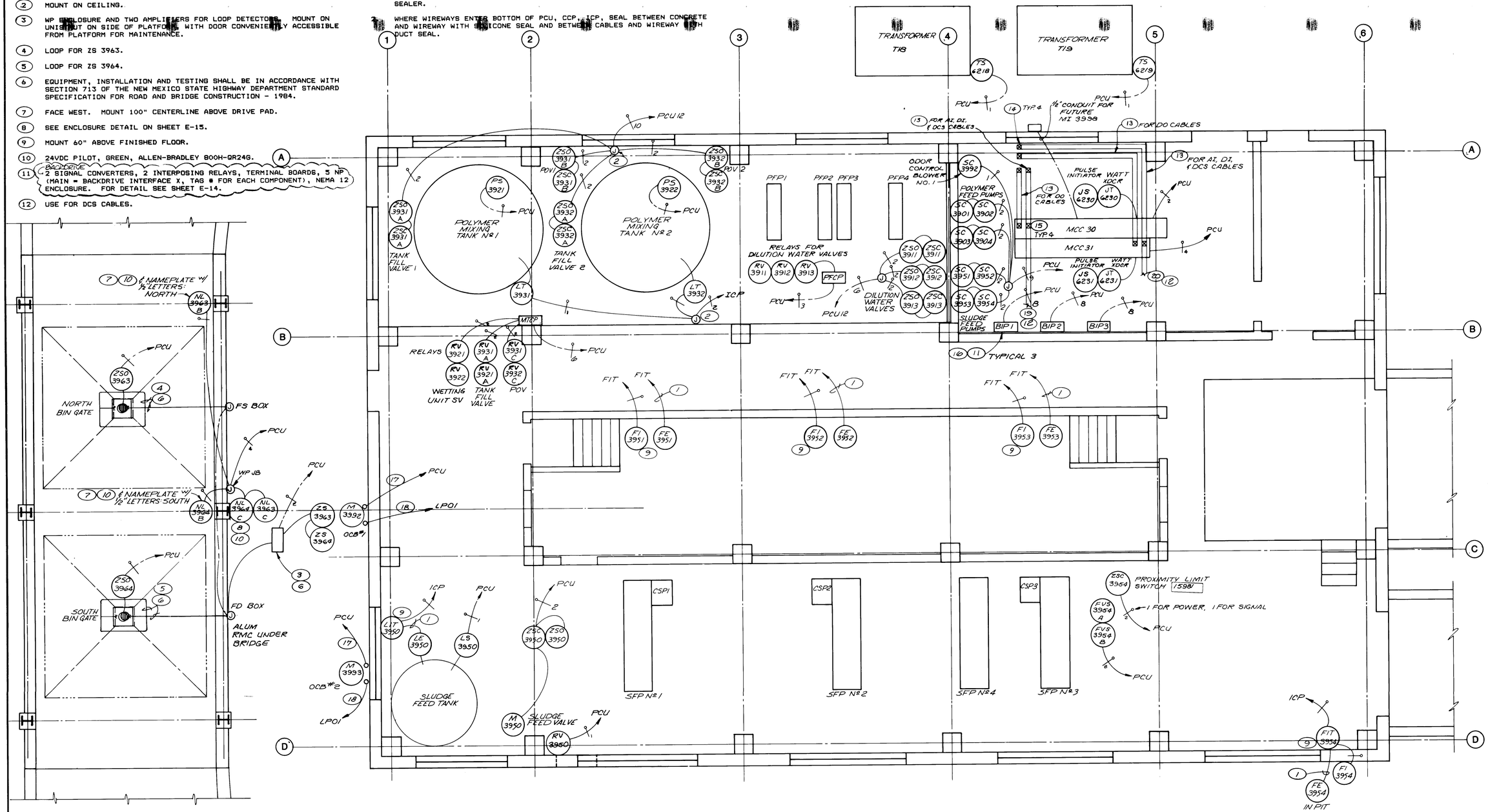

13. 6" X 6" WIREWAY OILTIGHT LAY-IN HOFFMAN BULLETIN F10 OR EQUAL. PROVIDE ALL HANGERS, ELBOWS, FITTINGS, OFFSET, TEES AND PLATES. MOUNT ON THE CEILING.
14. 6" X 6" VERTICAL SAME AS (13) EXCEPT TO THE BOTTOM OF PCU ABOVE.
15. 6" X 6" VERTICAL SAME AS (13) EXCEPT FROM TOP OF MCC TO HORIZONTAL WIREWAY.
16. ~~BACKDRIVE INTERPOSING PANEL~~
17. RUN 1" CONDUIT FROM PCU. STUB AND CAP 6" ABOVE GRADE AT EDGE OF SLAB FOR CARBON ADSORPTION VESSEL.
18. SAME AS (17) EXCEPT TO LP01.
19. SAME AS (13) EXCEPT TO BOTTOM OF CCP1 AND CCP2 ABOVE.
20. SAME AS (13) EXCEPT TO BOTTOM OF CCP3 (OR ICP3) AND ICP1 ABOVE.

RECORD DRAWING

DATE:	DRAFTED BY:
AUG. 1988	MCA

THESE RECORD DRAWINGS HAVE BEEN PREPARED, IN PART, ON THE BASIS OF INFORMATION COMPILED AND FURNISHED BY OTHERS. THE ENGINEER WILL NOT BE RESPONSIBLE FOR ANY ERRORS OR OMISSIONS WHICH HAVE BEEN INCORPORATED INTO THIS DOCUMENT AS A RESULT.

STEVEN E. SORENSON NEW MEXICO 6570 REGISTERED PROFESSIONAL ENGINEER

1 2 3 4 5 6 7 8 9 10 11 12 13 14 15 16 17 18 19 20 21 22 23 24 25 26 27 28 29
2 6 3 6 9 4 7 7 8 8

NO.	DATE	REVISIONS	APPROVED

DESIGNED SS
DRAWN STAFF
CHECKED
APPROVED
APPROVED
DATE 5-85

MOLZEN-CORBIN
STANLEY CONSULTANTS
A JOINT VENTURE

1/4" 1'-0" 0 4 6 8
GRAPHIC SCALE

CITY OF ALBUQUERQUE, NEW MEXICO
SOLIDS HANDLING FACILITIES
PHASE II B-3, CONTRACT 1

INTERIM SLUDGE DEWATERING FACILITIES
INSTRUMENTATION GROUND FLOOR PLAN

M-C NO. 832221
I-14
77 OF 112
SC NO.

NOTES

1. WIRE BY LIT MANUFACTURER.
2. SHOWN THUS FOR DESIGN PURPOSES. ACTUAL LOCATION WILL BE PROVIDED BY CONVEYOR MANUFACTURER.
3. 1-1" FOR DC PILOTS. 1 CONDUIT FOR AC CONTROL CONDUCTORS AS REQUIRED ON SCHEMATICS, CONDUIT SIZE TO MATCH. 1-1" SPARE.
4. 1" CONDUIT FOR DC PILOTS. 1" SPARE.
5. ONE CONDUIT FROM EACH PANEL TO PCU FOR DO. SIZE OF CONDUIT AND QUANTITY OF CONDUCTORS AS REQUIRED BY SCHEMATICS, INSTRUMENTATION INDEX, LOOP DIAGRAMS, ETC. MINIMUM 3/4" EACH RUN.
6. NOT USED.
7. LOCATE TRANSDUCER SO IT WILL NOT DETECT SLUDGE FALLING FROM CONVEYOR. MOUNT TO STRUCTURAL STEEL MEMBER IN LOCATION AS DIRECTED BY ENGINEER IN FIELD.
8. LOCATE IN MASTER TERMINAL SECTION.
9. FOR PANEL DETAIL, SEE SHEET I-17, TYPICAL 3.
10. FOR PANEL DETAIL, SEE SHEET I-18.
11. FOR PANEL DETAIL, SEE SHEET I-19.
12. ~~12"~~ 6" X 6" HORIZONTAL WIREWAY OIL TIGHT LAY-IN HOFFMAN BULLETIN F10, OR ENGINEER APPROVED EQUAL. PROVIDE ALL HANGERS, FITTINGS, OFFSETS, TEES, AND PLATES. MOUNT ABOVE SUSPENDED CEILING.

GENERAL NOTES

1. INSTALL NEC 500 GAS SEALS ON ALL CONDUITS PENETRATING ENVELOPE OF CONVEYOR ROOM AND/OR BIN AREA. FILL WITH NON-HARDENING SEALER.
2. WHERE WIREWAYS ENTER BOTTOM OF PCU, CCP, ICP: SEAL BETWEEN CONCRETE AND WIREWAY WITH SILICONE SEAL, AND BETWEEN CABLES AND WIREWAY WITH DUCT SEAL.
3. HORIZONTAL RUNS OF WIREWAY: 8" NOMINAL ABOVE CEILING, BUT CLOSE COORDINATION WITH HVAC DUCT REQUIRED.

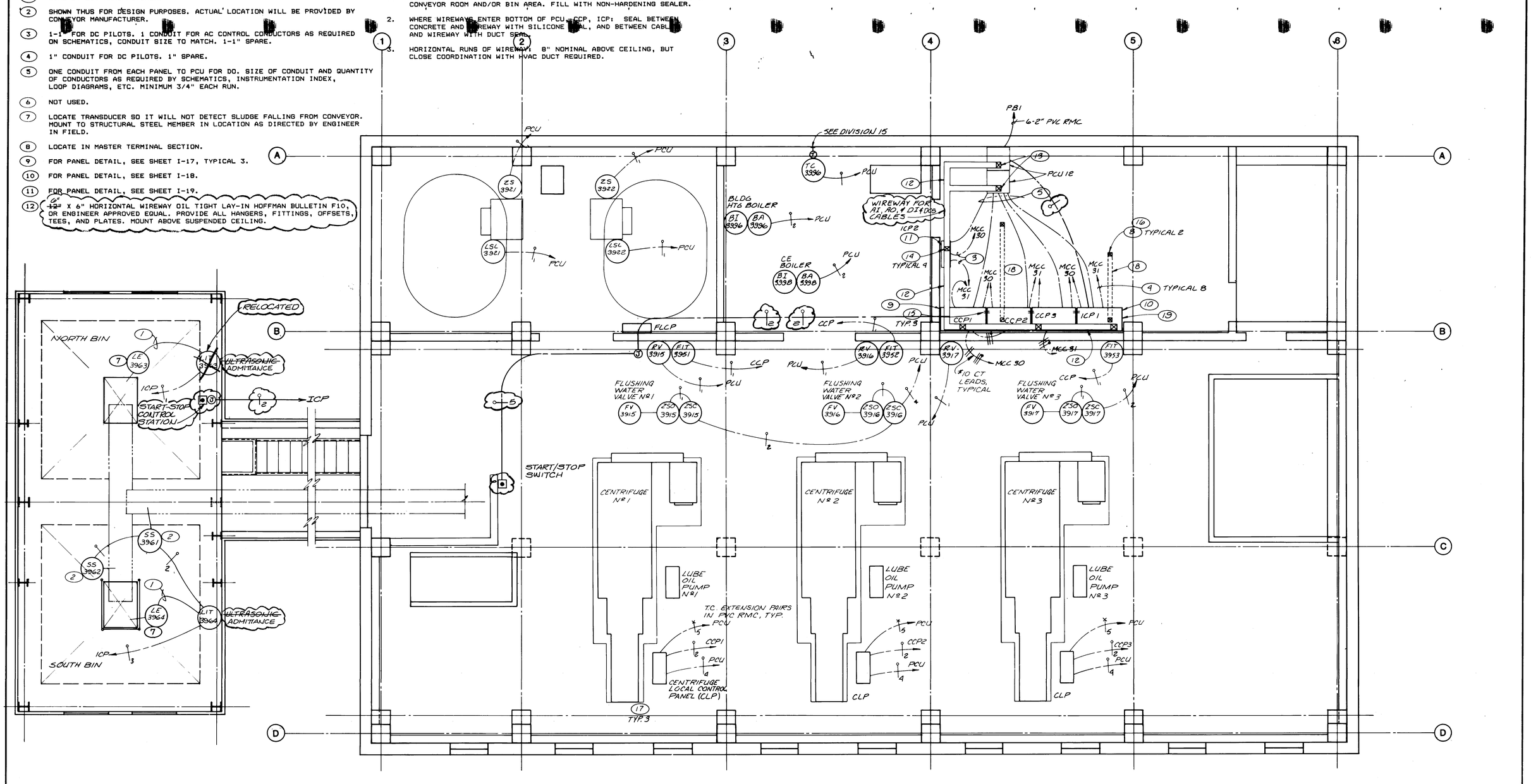

13. SAME AS 12 EXCEPT 6" X 6". VERTICAL TO TOP OF PCU.
14. SAME AS 12 EXCEPT 4" X 4". VERTICAL TO CCP, ICP.
15. CHASE NIPPLES AS NECESSARY FOR CONTROL WIRING.
16. SAME AS 12 EXCEPT 6" X 6". VERTICAL TO TOP OF MCC 30 & MCC 31 IN MCC ROOM.
17. FOR CENTRIFUGE LOCAL CONTROL PANEL (CLP) SEE DETAIL ON SHEET E-12.
18. SAME AS 12 EXCEPT 6" X 6" FROM TOP OF MCC TO BOTTOM OF CCP'S & ICP'S, MOUNT ON THE CEILING OF MCC ROOM. USE FOR AC CONTROL.
19. USE ALTERNATE PANEL LAYOUT IF ONLY 2 CCP'S ARE SUPPLIED. ADJUST WIREWAY LAYOUT TO MATCH.

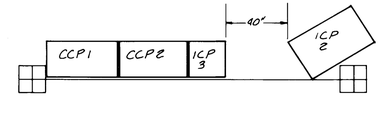

ALTERNATE PANEL LAYOUT 19
SCALE 1/4" = 1'-0"

RECORD DRAWING

DATE:	DRAFTED BY:
AUG. 1988	MCA

THESE RECORD DRAWINGS HAVE BEEN PREPARED, IN PART, ON THE BASIS OF INFORMATION COMPILED AND FURNISHED BY OTHERS. THE ENGINEER WILL NOT BE RESPONSIBLE FOR ANY ERRORS OR OMISSIONS WHICH HAVE BEEN INCORPORATED INTO THIS DOCUMENT AS A RESULT.

STEVEN E. SORENSON, NEW MEXICO, 6570, REGISTERED PROFESSIONAL ENGINEER

1 2 3 4 5 6 7 8 9 10 11 12 13 14 15 16 17 18 19 20 21 22 23 24 25 26 27 28 29
2 6 3 6 9 4 7 8 8 8

NO.	DATE	REVISIONS	APPROVED
1	11/17/89	REVISED RECORD DRAWING	R.A. Uhr

DESIGNED SS
DRAWN STAFF
CHECKED
APPROVED
APPROVED
DATE 5-85

MOLZEN-CORBIN
STANLEY CONSULTANTS
A JOINT VENTURE

1/4" 1'-0"
0 4 8 8
GRAPHIC SCALE

CITY OF ALBUQUERQUE, NEW MEXICO
SOLIDS HANDLING FACILITIES
PHASE II B-3, CONTRACT 1

INTERIM SLUDGE DEWATERING FACILITIES
INSTRUMENTATION SECOND FLOOR PLAN

M-C NO. 832221
I-15
78 OF 112
SC NO.

GENERAL NOTES

1. ALL CONSTRUCTION MATERIALS SHALL COMPLY WITH THE REQUIREMENTS OF NEC ARTICLE 500 AND ARTICLE 501 FOR CLASS 1 DIVISION 2 INSTALLATION. ENCLOSURES SHALL BE NEMA 7.

2. VALVES FV 3202, FV 3204, FV 3306, FV 3308, RELAYS AND INSTRUMENTATION ARE NEW. ALL ELSE IS EXISTING OR OTHER CONTRACTS.

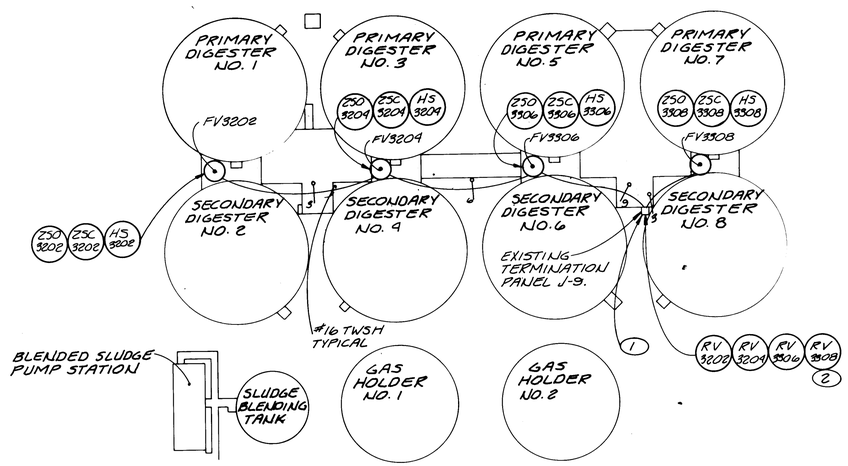

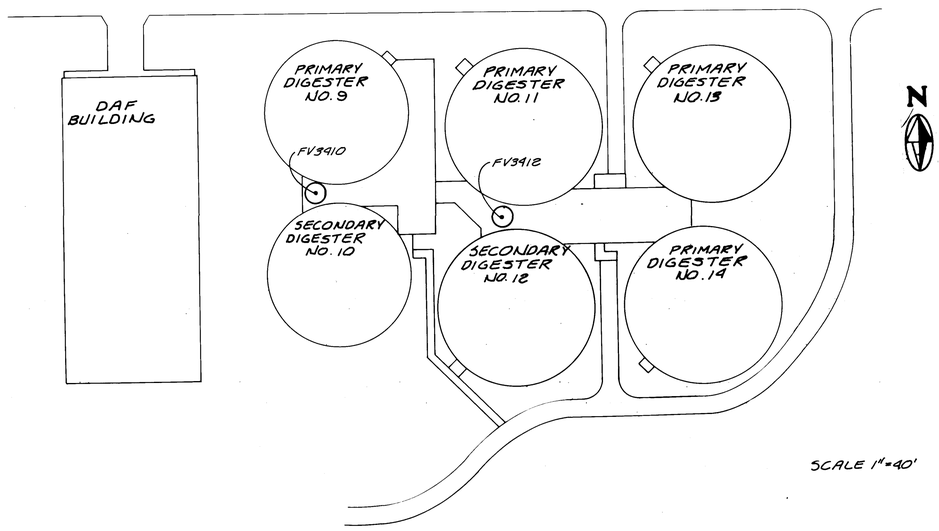

NOTES

1. OWNER WILL FURNISH INFORMATION FOR CONNECTION OF HS, ZSO, ZSC AND FV TO TERMINALS IN J-9.

2. INSTALL 4 NEW INTERPOSING RELAYS (SAME AS REQUIRED IN SECTION 16920) IN J-9. CONNECT TO FV 3202, FV 3204, FV 3306, FV 3308. SEE NOTE 2 ON SHEET E-08. NP ON EACH RELAY TO INCLUDE VALVE NAME AND TAG NUMBER.

RECORD DRAWING

DATE: AUG. 1988 | DRAFTED BY: MCA

THESE RECORD DRAWINGS HAVE BEEN PREPARED, IN PART, ON THE BASIS OF INFORMATION COMPILED AND FURNISHED BY OTHERS. THE ENGINEER WILL NOT BE RESPONSIBLE FOR ANY ERRORS OR OMISSIONS WHICH HAVE BEEN INCORPORATED INTO THIS DOCUMENT AS A RESULT.

STEVEN E. SORENSON NEW MEXICO 6570 PROFESSIONAL ENGINEER

26 3 6 9 4 7 9 8 8

NO.	DATE	REVISIONS	APPROVED

DESIGNED SS
DRAWN STAFF
CHECKED
APPROVED
APPROVED
DATE

MOLZEN-CORBIN
STANLEY CONSULTANTS

GRAPHIC SCALE

CITY OF ALBUQUERQUE, NEW MEXICO
SOLIDS HANDLING FACILITIES
PHASE II B-2, CONTRACT 1

INTERIM SLUDGE DEWATERING FACILITIES
INSTRUMENTATION-DIGESTERS 2-12

M-C NO.

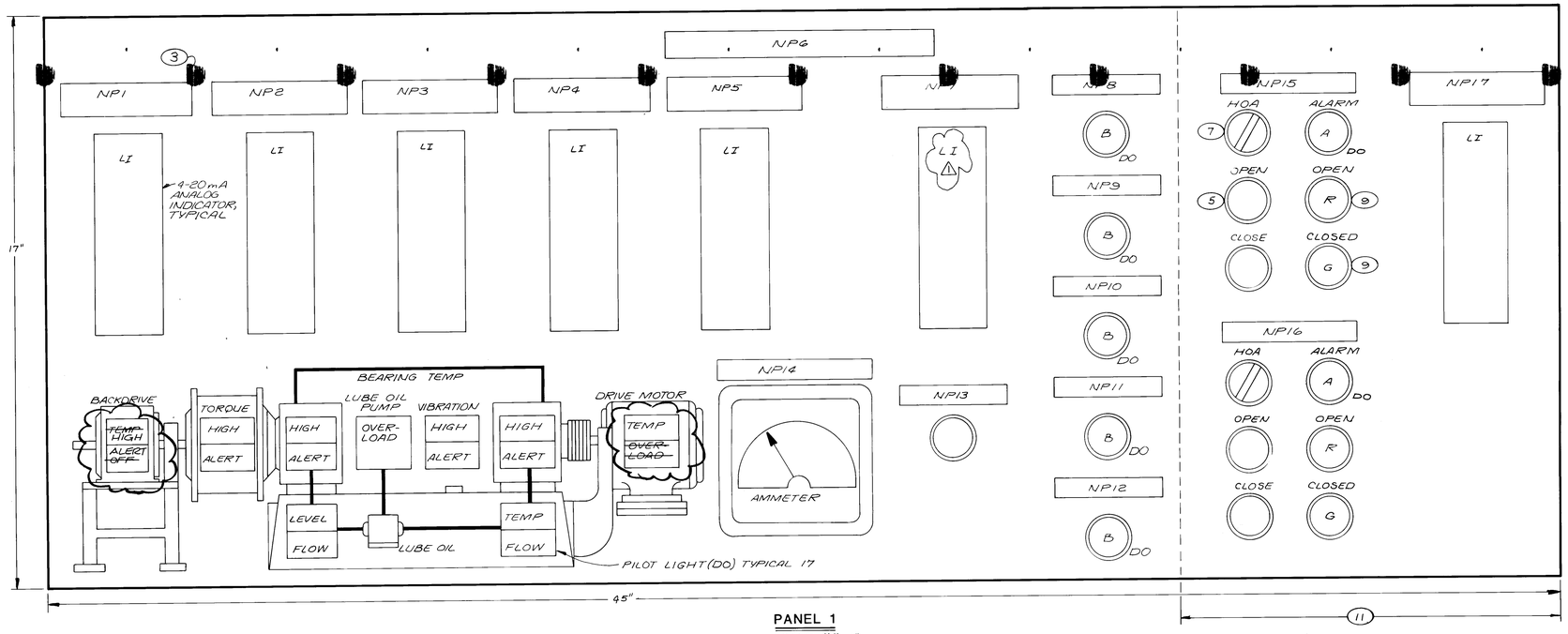

PANEL 1

SCALE: 1/2" = 1"

TYPICAL NAMEPLATE: BACKDRIVE TORQUE WI - 3941

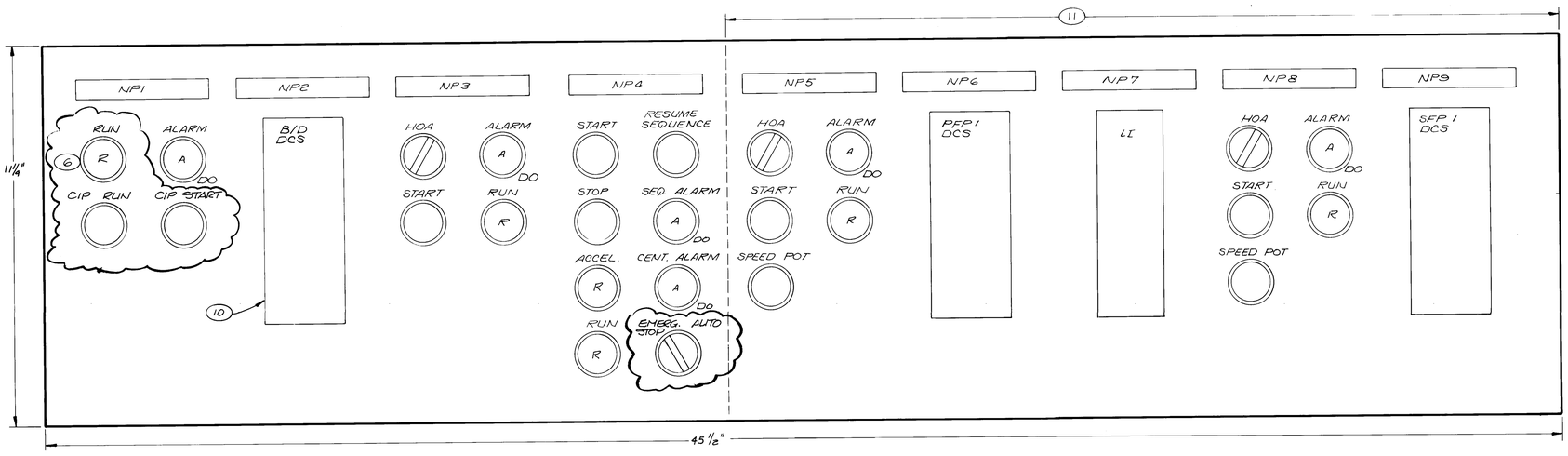

PANEL 2

SCALE: 1/2" = 1"

CENTRIFUGE CONTROL PANEL (CCP) TYPICAL 3

(1) (2)

NOTES

1. FOR CENTRIFUGE CONTROL PANEL ELEVATION, SEE SHEET I-18.
2. FOR PANEL REQUIREMENTS, SEE SPECIFICATION SECTION 15920
3. ENGRAVED NAMEPLATE WITH TAG NUMBER AS SHOWN ON ADJACENT SCHEDULE, TYPICAL
4. TAG NUMBERS SHOWN HERE ARE FOR CENTRIFUGE NO. 1. FOR CENTRIFUGE NO.S 2 AND 3 TAG NUMBERS, SEE INSTRUMENTATION INDEX.
5. PUSHBUTTON, SPECIFICATION SECTION 16956, TYPICAL.
6. TWO POSITION SELECTOR SWITCH, SPECIFICATION SECTION 16956 TYP
7. THREE POSITION SELECTOR SWITCH, SPECIFICATION SECTION 16956 TYP.
8. NOT USED
9. 24VDC INCANDESCENT PILOT LIGHT, SPECIFICATION SECTION 16956 TYP
10. DIGITAL CONTROL STATION, (DCS) TYPICAL 3. SEE SPECIFICATION SECTION 16972
11. 24" WIDE ICP3, IF SUPPLIED.

(4) NAMEPLATE	ENGRAVING	LETTER SIZE
NP1	BACKDRIVE TORQUE WI-3941	1/8"
NP2	BACKDRIVE R.P.M. SI-3941A	1/8"
NP3	DELTA R.P.M SI-3941C	1/8"
NP4	BOWL R.P.M. SI-3941B	1/8"
NP5	VIBRATION VI-3941	1/8"
NP6	CENTRIFUGE 1	1/2"
NP7	TEMPERATURE INDICATOR TI-3941	1/8"
NP8	MAIN DRIVE WINDING NL-3941B	1/8"
NP9	BACKDRIVE WINDING NL-3941E	1/8"
NP10	RIGHT BEARING NL-3941F	1/8"
NP11	LEFT BEARING NL-3941G	1/8"
NP12	LUBE OIL NL-3941J	1/8"
NP13	DISPLAY CONTROL HS-3941D	1/8"
NP14	MAIN DRIVE CURRENT II-3941	1/8"
NP15	FLUSHING WATER VALVE NO.1 FV-3915	1/8"
NP16	DILUTION WATER VALVE NO.1 FV-3911	1/8"
NP17	CENTRATE FLOW MAG METER FI-3954B	1/8"

(4) NAMEPLATE	ENGRAVING	LETTER SIZE
NP1	BACKDRIVE MS-3941B	1/8"
NP2	BACKDRIVE DCS WIC-3941	1/8"
NP3	LUBE OIL MS-3941C	1/8"
NP4	CENTRIFUGE	1/8"
NP5	POLYMER FEED PUMP NO. 1 MS-3901	1/8"
NP6	POLYMER FEED PUMP NO.1 DCS FIC-3901	1/8"
NP7	SLUDGE FLOW MAG METER NO.1 FE-3951	1/8"
NP8	SLUDGE FEED PUMP NO. 1 MS-3951	1/8"
NP9	SLUDGE FEED PUMP NO 1 DCS FIC-3951	1/8"

STEVEN E. SORENSON NEW MEXICO 6570 5-85 REGISTERED PROFESSIONAL ENGINEER

RECORD DRAWING

DATE:	DRAFTED BY:
AUG. 1988	MCA

THESE RECORD DRAWINGS HAVE BEEN PREPARED, IN PART, ON THE BASIS OF INFORMATION COMPILED AND FURNISHED BY OTHERS. THE ENGINEER WILL NOT BE RESPONSIBLE FOR ANY ERRORS OR OMISSIONS WHICH HAVE BEEN INCORPORATED INTO THIS DOCUMENT AS A RESULT.

1 2 3 4 5 6 7 8 9 10 11 12 13 14 15 16 17 18 19 20 21 22 23 24 25 26 27 28 29
2 6 3 6 9 4 8 0 8 8

NO.	DATE	REVISIONS	APPROVED
1	7-23-85	NP7 DEVICE	

DESIGNED SS
DRAWN STAFF
CHECKED
APPROVED
APPROVED
DATE 5-85

MOLZEN-CORBIN
STANLEY CONSULTANTS
A JOINT VENTURE

AS SHOWN
GRAPHIC SCALE

CITY OF ALBUQUERQUE, NEW MEXICO
SOLIDS HANDLING FACILITIES
PHASE II B-3, CONTRACT 1

INTERIM SLUDGE DEWATERING FACILITIES
CENTRIFUGE CONTROL PANEL

M-C NO. 832221
I-17
80 OF 112
SC NO.

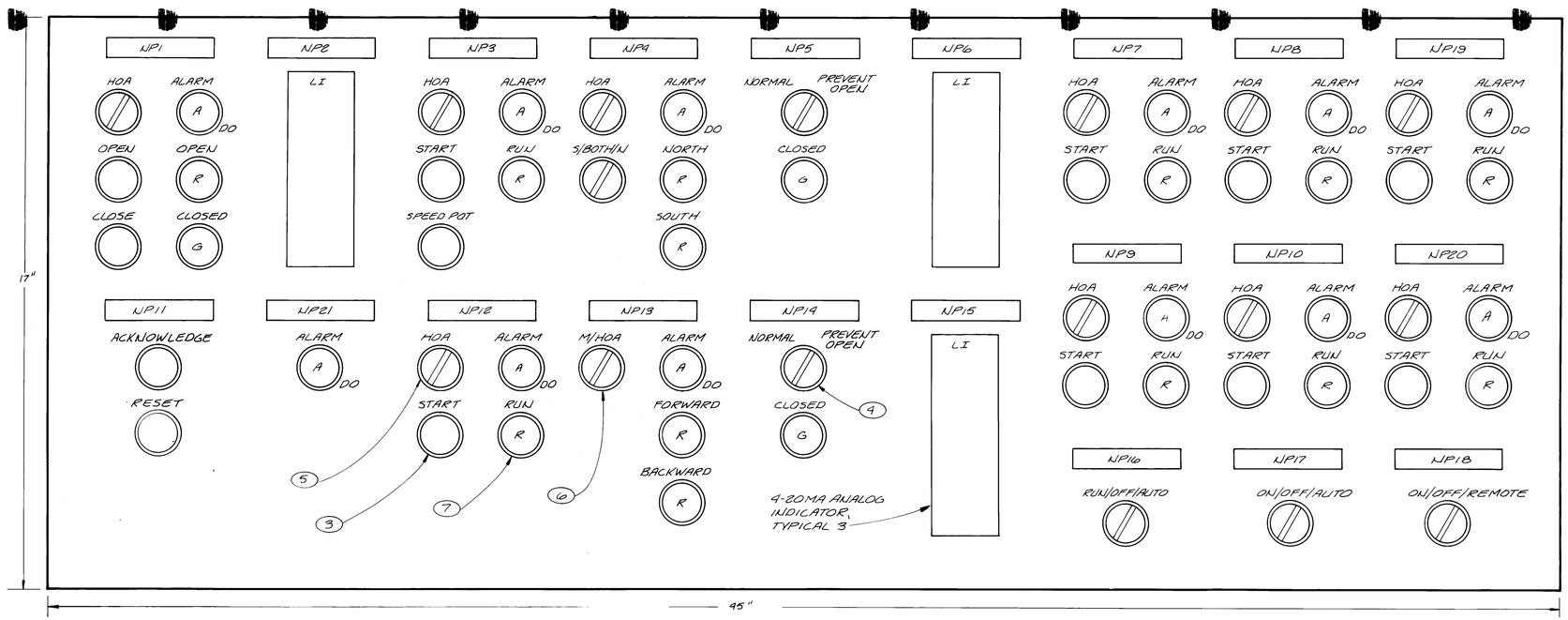

PANEL 1
SCALE 1/8" = 1"

NOTES

1. FOR PANEL REQUIREMENTS SEE SPECIFICATION SECTION 15920
2. FOR CONTROL PANEL ELEVATIONS, SEE THIS SHEET.
3. PUSH BUTTON SPECIFICATION SECTION 16956 TYPICAL
4. TWO POSITION SELECTOR SWITCH, SPECIFICATION SECTION 16956 TYPICAL.
5. THREE POSITION SELECTOR SWITCH, SPECIFICATION SECTION 16956 TYPICAL.
6. FOUR POSITION SELECTOR SWITCH, SPECIFICATION SECTION 16956 TYPICAL.
7. 24V. DC. INCANDESCANT PILOT LIGHT, SPECIFICATION SECTION 16956 TYPICAL.
8. DIGITAL CONTROL STATION (DCS), SPECIFICATION SECTION 15972.

NAMEPLATE	ENGRAVING		LETTER SIZE
NP1	SLUDGE FEED VALVE	FV-3950	1/8"
NP2	SLUDGE FEED TANK LEVEL INDICATOR	LI-3950	1/8"
NP3	ODOR CONTROL BLOWER NO. 1	MS-3992	1/8"
NP4	DISTRIBUTION CONVEYOR	MSF-3962 MSB-3962	1/8"
NP5	SOUTH BIN GATE	FV-3964	1/8"
NP6	SOUTH BIN LEVEL INDICATOR	LI-3964A	1/8"
NP7	HOT WATER PUMP NO. 1	MS-3996	1/8"
NP8	HOT WATER PUMP NO. 2	MS-3997	1/8"
NP9	INTAKE FAN NO. 1	MS-3990	1/8"
NP10	INTAKE FAN NO. 2	MS-3999	1/8"
NP11	ALARM	UA-3975	1/8"
NP12	ODOR CONTROL BLOWER NO. 2	MS-3993	1/8"
NP13	INCLINED CONVEYOR	MSF-3961 MSB-3961	1/8"
NP14	NORTH BIN GATE	FV-3963	1/8"
NP15	NORTH BIN LEVEL INDICATOR	LI-3963A	1/8"
NP16	CONTROL ROOM AIR CONDITIONER	TC-3991	1/8"
NP17	AREA LIGHTING	HS-3973G	1/8"
NP18	MAINTENANCE LIGHTING	HS-3973	1/8"
NP19	POWER ROOF EXHAUSTER NO. 1	MS-3934	1/8"
NP20	POWER ROOF EXHAUSTER NO 2	MS-3935	1/8"
NP21	SLUDGE FEED TANK LEVEL	NL-3950A	1/8"

TYPICAL NAMEPLATE:

DISTRIBUTION CONVEYOR
MSF-3962 MSB-3962

NAMEPLATE	ENGRAVING		LETTER SIZE
NP1	DIGESTER VALVE NO. 2	FV-3202	1/8"
NP2	DIGESTER VALVE NO. 4	FV-3204	1/8"
NP3	ODOR CONTROL BLOWER NO. 1 DCS	FIC-3992	1/8"
NP4	DIGESTER VALVE NO. 6	FV-3306	1/8"
NP5	DIGESTER VALVE NO. 8	FV-3308	1/8"
NP6	DIGESTER VALVE NO. 10	FV-3410	1/8"
NP7	DIGESTER VALVE NO. 12	FV-3412	1/8"
NP8	SLUDGE FEED PUMP NO. 4 STANDBY	MS-3954	1/8"
NP9	POLYMER FEED PUMP NO. 4 STAND BY	MS-3904	1/8"
NP10	DIGESTED SLUDGE PUMP NO. 1	NL-3291	1/8"
NP11	DIGESTED SLUDGE PUMP NO. 9	NL-3400	1/8"
			1/8"

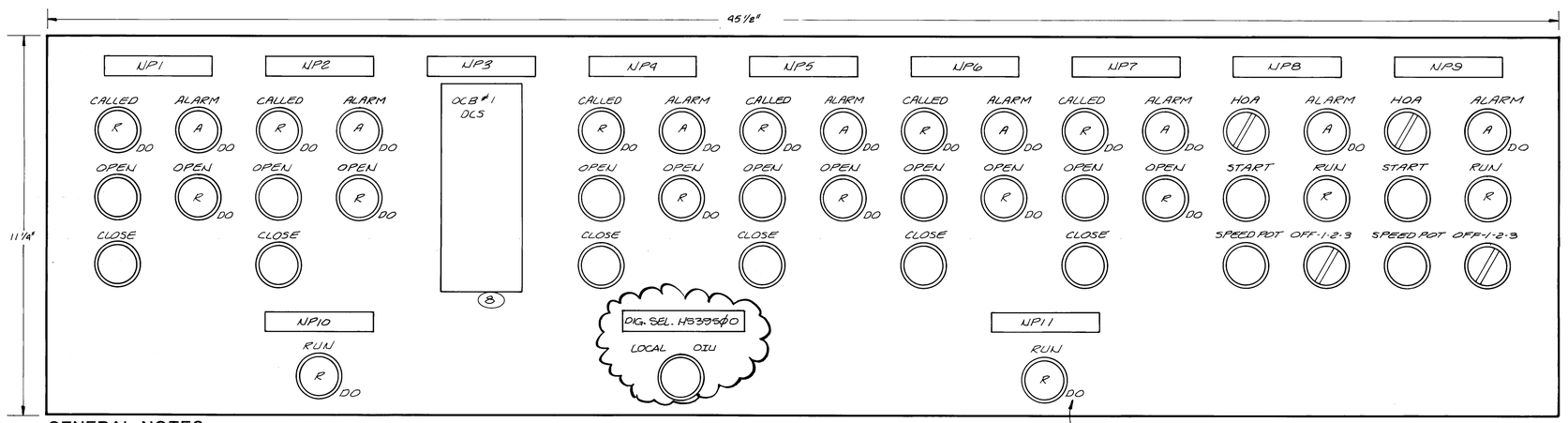

DENOTES DIGITAL OUTPUT, TYPICAL.

PANEL 2
SCALE 1/8" = 1"

GENERAL NOTES

1. PROVIDE 120VAC TO 24VDC REGULATED (±1%) POWER SUPPLY. WATT CAPACITY AS REQUIRED TO DRIVE RELAYS LABELED "AR" ON SCHEMATICS PLUS 50 %. ONE REQUIRED. AMBIENT TO 60°
2. PROVIDE 120VAC TO 24VDC REGULATED (±0.5%) DC POWER SUPPLY FOR PILOT LAMPS. WATT CAPACITY AS REQUIRED TO DRIVE ALL PILOT LAMP ASSEMBLIES ON TWO ICP'S AND THREE CCP'S, PLUS CAPACITY FOR TWENTY FUTURE PILOT LAMP ASSEMBLIES. ONE REQUIRED. AMBIENT TO 60°.
3. EACH SUPPLY SHALL HAVE INTEGRAL LOAD AMMETER AND ADJUSTABLE FOLDBACK CURRENT LIMITING. SHOW COMPLETE DC CONNECTIONS ON SUBMITTALS.

INTEGRATED CONTROL PANEL NO. 1 (ICP1)
1 2

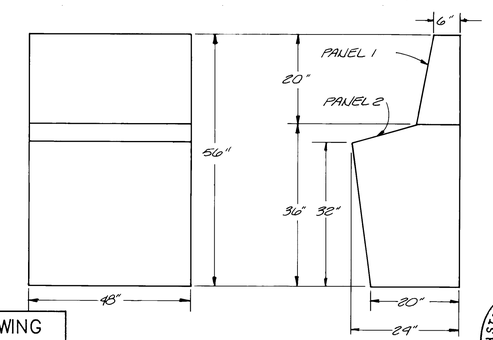

CONTROL PANEL ELEVATIONS
NO SCALE

RECORD DRAWING	
DATE: AUG. 1988	DRAFTED BY: MCA

THESE RECORD DRAWINGS HAVE BEEN PREPARED, IN PART, ON THE BASIS OF INFORMATION COMPILED AND FURNISHED BY OTHERS. THE ENGINEER WILL NOT BE RESPONSIBLE FOR ANY ERRORS OR OMISSIONS WHICH HAVE BEEN INCORPORATED INTO THIS DOCUMENT AS A RESULT.

STEVEN E. SORENSON NEW MEXICO 8570 REGISTERED PROFESSIONAL ENGINEER 5-85

1 2 3 4 5 6 7 8 9 10 11 12 13 14 15 16 17 18 19 20 21 22 23 24 25 26 27 28 29
2 6 3 6 9 4 8 1 8 8

NO.	DATE	REVISIONS	APPROVED

DESIGNED SS
DRAWN STAFF
CHECKED
APPROVED
APPROVED
DATE 5-85

MOLZEN-CORBIN
STANLEY CONSULTANTS
A JOINT VENTURE

AS SHOWN
GRAPHIC SCALE

CITY OF ALBUQUERQUE, NEW MEXICO
SOLIDS HANDLING FACILITIES
PHASE II B-3, CONTRACT 1

INTERIM SLUDGE DEWATERING FACILITIES
INTEGRATED CONTROL PANEL NO. 1

M-C NO. 832221
I-18
81 OF 112
SC NO.

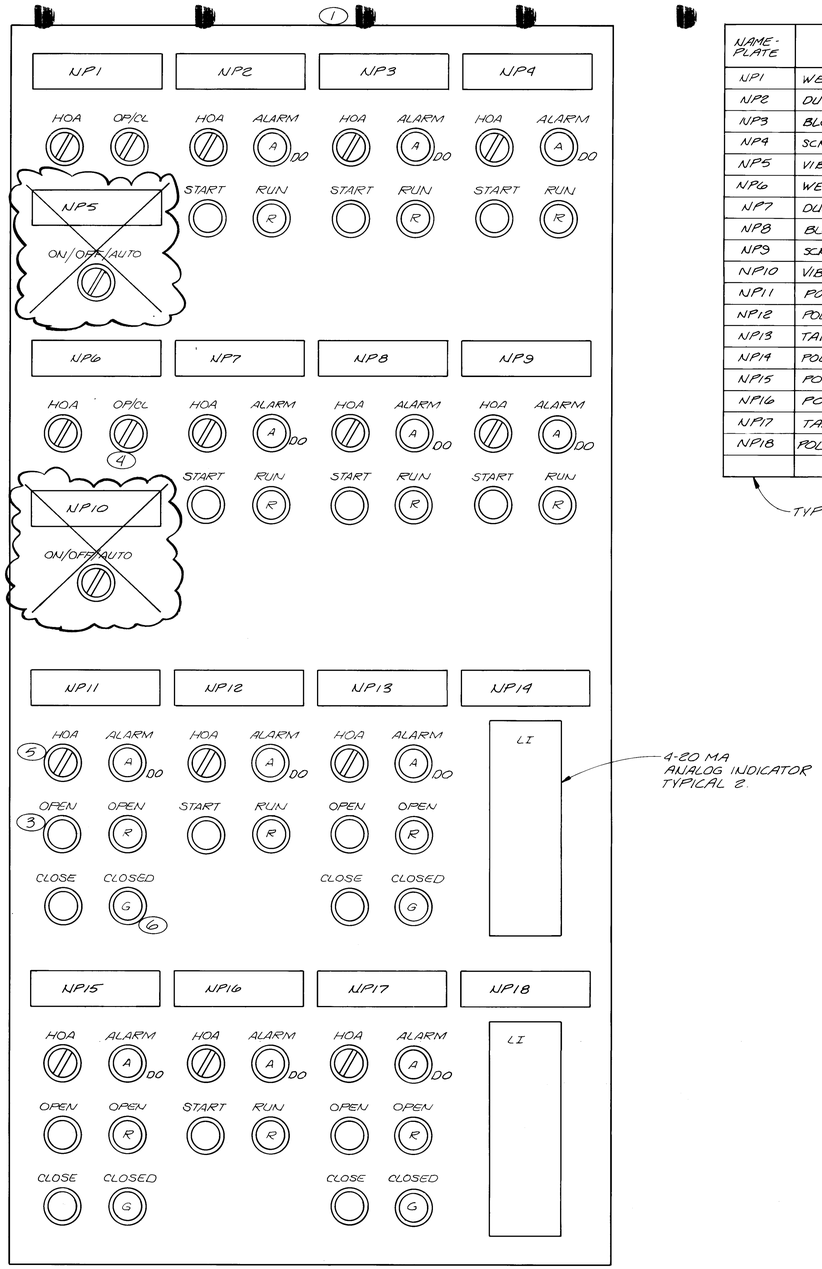

INTEGRATED CONTROL PANEL NO. 2 (ICP2)

NO SCALE (2)

NAME-PLATE	ENGRAVING		LETTER SIZE
NP1	WETTING UNIT SOLENOID VALVE #1	SV-3921	1/8"
NP2	DUST COLLECTOR #1	MS-3921C	1/8"
NP3	BLOWER #1	MS-3921B	1/8"
NP4	SCREW FEEDER #1	MS-3921A	1/8"
NP5	VIBRATOR #1	HS-3921N	1/8"
NP6	WETTING UNIT SOLENOID VALVE #2	SV-3922	1/8"
NP7	DUST COLLECTOR #2	MS-3922C	1/8"
NP8	BLOWER #2	MS-3922B	1/8"
NP9	SCREW FEEDER #2	MS-3922A	1/8"
NP10	VIBRATOR #2	HS-3922N	1/8"
NP11	POLYMER OUTLET VALVE #1	FV-3931B	1/8"
NP12	POLYMER MIXER #1	MS-3931	1/8"
NP13	TANK FILL VALVE #1	FV-3931A	1/8"
NP14	POLYMER MIXING TANK #1 LEVEL	LI 3931	1/8"
NP15	POLYMER OUTLET VALVE #2	FV-3932B	1/8"
NP16	POLYMER MIXER #2	MS-3932	1/8"
NP17	TANK FILL VALVE #2	FV-3932A	1/8"
NP18	POLYMER MIXING TANK #2 LEVEL	LI-3932	1/8"
			1/8"

TYPICAL NAMEPLATE: SCREW FEEDER #1
MS-3921A

NOTES

1. 48 3/8" X 36 1/2" X 19" CONTROL ENCLOSURE NEMA 4X WITH 45" X 33" PANEL- ROBROY INDUSTRIES CAT # 14B3G12HWT WITH BACKPANEL CAT. # BP4836 OR ENGINEER APPROVED EQUAL.
2. FOR PANEL REQUIREMENTS SEE SPECIFICATION SECTION 16920
3. PUSHBUTTON SPECIFICATION SECTION 16956 TYPICAL.
4. TWO POSITION SELECTOR SWITCH, SPECIFICATION SECTION 16956 TYPICAL.
5. THREE POSITION SELECTOR SWITCH, SPECIFICATION SECTION 16956 TYPICAL.
6. 24 V DC INCANDESCANT PILOT LIGHT, SPECIFICATION SECTION 16956 TYPICAL.

RECORD DRAWING

DATE: AUG. 1988	DRAFTED BY: MCA

THESE RECORD DRAWINGS HAVE BEEN PREPARED, IN PART, ON THE BASIS OF INFORMATION COMPILED AND FURNISHED BY OTHERS. THE ENGINEER WILL NOT BE RESPONSIBLE FOR ANY ERRORS OR OMISSIONS WHICH HAVE BEEN INCORPORATED INTO THIS DOCUMENT AS A RESULT.

STEVEN E. SORENSON NEW MEXICO 6570 5-85 REGISTERED PROFESSIONAL ENGINEER

1 2 3 4 5 6 7 8 9 10 11 12 13 14 15 16 17 18 19 20 21 22 23 24 25 26 27 28 29
2 6 3 6 9 4 8 2 8 8

NO.	DATE	REVISIONS	APPROVED

DESIGNED SS
DRAWN STAFF
CHECKED
APPROVED
APPROVED
DATE 5-85

MOLZEN-CORBIN
STANLEY CONSULTANTS
A JOINT VENTURE

AS SHOWN
GRAPHIC SCALE

CITY OF ALBUQUERQUE, NEW MEXICO
SOLIDS HANDLING FACILITIES
PHASE II B-3, CONTRACT 1

INTERIM SLUDGE DEWATERING FACILITIES
INTEGRATED CONTROL PANEL NO.2

M-C NO. 832221
I-19
82 OF 112
SC NO.

MFC01 A & B

MADR
SLAVES
1. CI501A
2. CI501B
3. CI501C
4. CI501D
5. CI501E
6. CI501F
7. CI501G
8. CI501H
9.
10.
11.
12.
13.
14.
15.
16.
17.
18.
19.
20.
DESCRIPTION REDUNDANT MULTIFUNCTION CONTROLLER FOR THE 8 CIS MODULES LISTED AT RIGHT

CI501A

SADR
AI
FIT 3951
VT 3941
LT 3931
LT 3963
AO
SC 3901
SC 3951
DI
LSL 3921
HS 3921
DO
SV 3921
SV 3922
SV 3954A
SV 3954B
SOFTWARE TITLES 1. POLYMER FEED PUMP #1 2. SLUDGE FEED PUMP #1 3. SAMPLE VALVES
DCS NO. 1. DCS03A FIC 3901 2. DCS03E FIC 3951
HADR

CI501B

SADR
AI
FIT 3952
VT 3942
LT 3932
LIT 3964
AO
SC 3902
SC 3952
DI
HS 3954E
HS 3954F
HS 3954G
DO
SOFTWARE TITLES 1. POLYMER FEED PUMP #2 2. SLUDGE FEED PUMP #2 3. STANDBY SFP SELECT
DCS NO. 1. DCS03B FIC 3902 2. DCS03F FIC 3952
HADR

CI501C

SADR
AI
FIT 3953
VT 3943
LIT 3950
AO
SC 3903
SC 3953
DI
HS 3904E
HS 3904F
HS 3904G
DO
SOFTWARE TITLES 1. POLYMER FEED PUMP #3 2. SLUDGE FEED PUMP #3 3. STANDBY PFP SELECT
DCS NO. 1. DCS03C FIC 3903 2. DCS03G FIC 3953
HADR

CI501D

SADR
AI
FIT 3954
JT 6230
JT 6231
AO
SC 3904
SC 3954
DI
ZSC 3954
BI 3996
BA 3996
DO
SOFTWARE TITLES 1. POLYMER FEED PUMP #4 2. SLUDGE FEED PUMP #4 3. BUILDING BOILER 4. POWER TRANSDUCERS
DCS NO.
HADR

CI501E

SADR
AI
SE 3941A
SE 3941B
WT 3941
AO
SC 3941
SC 3992
DI
BI 3998
BA 3996
DO
SOFTWARE TITLES 1. CENTRIFUGE #1 BACKDRIVE 2. CE BOILER
DCS NO. 1. DCS03I WIC 3941 2. DCS03L FIC 3941
HADR

CI501F

SADR
AI
SE 3942A
SE 3942B
WT 3942
AO
SC 3942
SI 3943A
DI
TC 3994
TC 3995
TC 3996
DO
SOFTWARE TITLES 1. CENTRIFUGE #2 BACKDRIVE 2. HVAC CONTROLS
DCS NO. 1. DCS03J WIC 3942
HADR

CI501G

SADR
AI
SE-3943A
SE-3943B
SE-[redacted]C
WT-[redacted]3
AO
SC-3943
SI-3943B
DI
TC-3997
HS-3412B
DO
SOFTWARE TITLES CENTRIFUGE #3 BACKDRIVE
DCS NO. DCS03KWIC3993
HADR

CI501H

SADR
AI
IT-3941
IT-3942
IT-3[redacted]
AO
SC-3400
SI-3943C
DI
TS-6218
TS-6219
DO
SOFTWARE TITLES 1. DIGESTED SLUDGE PUMP 9 2. XFMR T18 & T19 ALARM
DCS NO.
HADR

COMØ

MADR
AI
[redacted]
AO
AO
DI
DI
DO
SOFTWARE TITLES
DCS NO.
HADR

COMØ

MADR
AI
[redacted]
AO
AO
DI
DI
DO
SOFTWARE TITLES
DCS NO.
HADR

COMØ

MADR
AI
[redacted]
AO
AO
DI
DI
DO
SOFTWARE TITLES
DCS NO.
HADR

COMØ

MADR
AI
[redacted]
AO
AO
DI
DI
DO
SOFTWARE TITLES
DCS NO.
HADR

LMMØ5A

MADR
1. DSMØ5A
2. DSMØ5B
3. DSMØ5C
4. DSMØ5D
5. DSMØ5E
6. DSMØ5F
7.
8.
SOFTWARE TITLES NO. 1 CENTRIFUGE AREA CONTROL
HADR

DSMØ5A

SADR
DO
MS 3901
NL 3901
MS 3951
NL 3951
MSS 3941A
MSR 3941A
NL 3941A
NL 3941K
DI
MI 3901
MA 3901
HS 3901B
MI 3951
MA 3951
HS 3951B
MI 3941A
HS 3941D
EQUIPMENT 1. POLYMER FEED PUMP #1 2. SLUDGE FEED PUMP #1 3. CENTRIFUGE #1
HADR

DSMØ5B

SADR
DO
FV 3915
NL 3915
FV 3911
NL 3911
NL 3950B
NL 3999
NL 3941H
DI
ZSC 3915
HS 3915B
ZSO 3911
ZSC 3911
HS 3911B
HS 3921K
ZSO 3915
ZSC 3915
EQUIPMENT 1. FLUSHING WATER VALVE #1 2. DILUTION WATER VALVE #1
HADR

DSMØ5C

SADR
DO
MS 3921A
MS 3921B
NL 3921B
MS 3921C
NL 3921C
NL 3921A
DI
PS 3921
ZS 3921
HS 3921B
MI 3921A
HS 3921E
MI 3921B
HS 3921H
MI 3921C
HS 3921G
EQUIPMENT 1. SCREW FEEDER #1 2. BLOWER #1 3. WETTING UNIT VALVE #1 4. DUST COLLECTOR #1
HADR

DSMØ5D

SADR
DO
FV 3931
NL 3931A
MS 3931B
NL 3931B
NL 3931C
FV 3931B
NL 3941E
NL 3941F
DI
ZSO 3931A
ZSC 3931A
MI 3931
ZSO 3931B
ZSC 3931B
HS 3931H
HS 3941A
HS 3941G
EQUIPMENT 1. TANK FILL VALVE #1 2. POLYMER MIXER #1 3. POLYMER OUTLET VALVE #1
HADR

DSMØ5E

SADR
DO
MS 3941B
NL 3941C
MS 3941C
NL 3941I
NL 3941J
MS 3941D
NL 3941B
NL 3941D
DI
HS 3941K
HS 3941L
MI 3941C
MI 3941D
FS 3941A
FS 3941B
TS 3941
LS 3941
EQUIPMENT 1. CENTRIFUGE #1
HADR

DSMØ5F

SADR
DO
FV 3202
NL 3202A
NL 3202B
NL 3202C
FV 3204
NL 3204A
NL 3204B
NL 3204C
DI
ZSO 3202
ZSC 3202
HS 3202A
HS 3202C
HS 3202D
ZSO 3204
ZSC 3204
HS 3204A
EQUIPMENT 1. DIGESTERS #2 & #4 PLUG VALVES
HADR

DSMØ

SADR
DO
DI
EQUIPMENT
HADR

DSMØ

SADR
DO
DI
EQUIPMENT
HADR

LMMØ5B

MADR
1. DSMØ5G
2. DSMØ5H
3. DSMØ5I
4. DSMØ5J
5. DSMØ5K
6. DSMØ5L
7
8
SOFTWARE TITLES NO 2 CENTRIFUGE AREA CONTROL
HADR

DSMØ5G

SADR
DO
MS-3902
NL-3902
MS 3952
NL 3952
MSS 3942A
MSR 3942A
NL 3942A
NL 3942K
DI
MI 3902
MA 3902
HS 3902B
MI 3952
MA 3952
HS 3952B
MI 3942A
HS 3942D
EQUIPMENT 1. POLYMER FEED PUMP #2 2. SLUDGE FEED PUMP #2 3. CENTRIFUGE #2
HADR

DSMØ5H

SADR
DO
FV 3916
NL 3916
FV 3912
NL 3912
NL 3942H
DI
ZSC 3916
HS 3916
ZSO 3912
ZSC 3912
HS 3912B
HS 3922K
ZSO 3916
ZSC 3952
EQUIPMENT 1 FLUSHING WATER VALVE #2 2 DILUTION WATER VALVE #2
HADR

DSMØ5I

SADR
DO
MS 3922A
MS 3922B
NL 3922B
MS 3922C
NL 3922A
DI
PS 3922
ZS 3922
HS 3922B
MI 3922A
HS 3922E
MI 3922B
HS 3922H
MI 3922C
EQUIPMENT 1. SCREW FEEDER #2 2. BLOWER #2 3. WETTING UNIT VALVE #2 4. DUST COLLECTOR #2
HADR

DSMØ5J

SADR
DO
FV 3932
NL 3932A
MS 3932B
NL 3932B
NL 3932C
FV 3932B
NL 3942E
NL 3942F
DI
ZSO 3932A
ZSC 3932A
MI 3932
ZSO 3932B
ZSC 3932B
HS 3932H
HS 3942A
HS 3942G
EQUIPMENT 1. TANK FILL VALVE #2 2. POLYMER MIXER #2 3. POLYMER OUTLET VALVE #2
HADR

DSMØ5K

SADR
DO
MS 3942B
NL 3942C
MS 3942C
NL 3942I
NL 3942J
MS 3942D
NL 3942B
NL 3942D
DI
HS 3942K
HS 3942C
MI 3942C
MI 3942D
FS 3942A
FS 3942B
TS 3942
LS 3942
EQUIPMENT 1. CENTRIFUGE #2
HADR

DSMØ5L

SADR
DO
FV 3306
NL 3306A
NL 3306B
NL 3306C
FV 3308
NL 3308A
NL 3308B
NL 3308C
DI
ZSO 3306
ZSC 3306
HS 3306A
HS 3306C
HS 3306D
ZSO 3308
ZSC 3308
HS 3308A
EQUIPMENT 1. DIGESTER #6 & #8 PLUG VALVES
HADR

DSMØ

SADR
DO
DI
EQUIPMENT
HADR

DSMØ

SADR
DO
DI
EQUIPMENT
HADR

LMMØ5B

MADR
1. DSMØ5M
2. DSMØ5N
3. DSMØ5O
4. DSMØ5P
5. DSMØ5Q
6. DSMØ5R
7.
8.
SOFTWARE TITLES NO. 3 CENTRIFUGE AREA CONTROLS
HADR

DSMØ5M

SADR
DO
MS 3903
NL 3903
MS 3953
NL 3953
MSS 3943A
MSR 3943A
NL 3943A
NL 3943K
DI
MI 3903
MA 3903
HS 3903B
MI 3953
MA 3953
HS 3953B
MI 3943A
HS 3943D
EQUIPMENT 1. POLYMER FEED PUMP #3 2. SLUDGE FEED PUMP #3 3. CENTRIFUGE #3
HADR

DSMØ5N

SADR
DO
FV 3917
NL 3917
FV 3913
NL 3913
NL 3943H
DI
ZSC 3917
HS 3917B
ZSO 3913
ZSC 3913
HS 3913B
ZSO 3917
ZSC 3953
ZSC 3954
EQUIPMENT 1. FLUSHING WATER VALVE #3 2. DILUTION WATER VALVE #3
HADR

DSMØ5O

SADR
DO
FV 3950
NL 3950B
MSF 3961
NL 3961
YS 6439G
LS 3950
DI
HS 3943G
ZSO 3950
ZSC 3950
HS 3950B
MI 3961
HS 3961D
SS 3961
HS 6439G
EQUIPMENT 1. SLUDGE FEED TANK 2. INCLINED CONVEYOR #1
HADR

DSMØ5P

SADR
DO
MS 3943B
NL 3943C
MS 3943C
NL 3943I
NL 3943J
MS 3943D
NL 3943B
NL 3943D
DI
HS 3943K
HS 3943L
MI 3943C
MI 3943D
FS 3943A
FS 3943B
TS 3943
LS 3943
EQUIPMENT 1. CENTRIFUGE #3
HADR

DSMØ5Q

SADR
DO
NL 3964B
NL 3964C
MS 3990
NL 3990
DI
ZSC 3964
ZS 3964
HS 3964A
MI 3990
HS 3990B
HS 3204C
HS 3204D
HS 3308D
EQUIPMENT 1. SOUTH BIN GATE 2. DIGESTER PLUG VALVES
HADR

DSMØ5R

SADR
DO
NL 3400
YS 3991
MS 3994
NL 3995
MS 3996
NL 3996
MS 3998
DI
HS 3991
MI 3291
MI 3400
HS 3994B
MI 3994
MI 3996
HS 3996A
MI 3998
EQUIPMENT 1. ODOR CONTROL BLOWER #1 2. HOT WATER CIRC PUMP #1 3. INTAKE FAN #1 4. POWER ROOF EXHAUSTER #1
HADR

DSMØ

SADR
DO
DI
EQUIPMENT
HADR

DSMØ

SADR
DO
DI
EQUIPMENT
HADR

LMMØ5D

MADR
1. DSMØ5S
2 DSMØ5T
3 DSMØ5U
4 DSMØ5V
5 DSMØ5W
6 DSMØ5X
7
8
SOFTWARE TITLES SPACE EQUIPMENT CONTROL AREA
HADR

DSMØ5S

SADR
DO
MS 3904
NL 3904
MS 3954
NL 3954
MS 3992
NL 3992
DI
MI 3904
MA 3904
HS 3904B
MI 3954
MA 3954
HS 3954B
MI 3992
MA 3992
EQUIPMENT 1. POLYMER FEED PUMP #4 2. SLUDGE FEED PUMP #4
HADR

DSMØ5T

SADR
DO
MSF 3962
NL 3962
MSS 3400
MSR 3400
DI
MI 3962
HS 3962
SS 3962
HS 3962D
HS 3962E
HS 3962C
HS 3962F
EQUIPMENT 1. INCLINED CONVEYOR #2
HADR

DSMØ5U

SADR
DO
NC 3963B
NC 3963C
YS 6439A
YS 6439B
YS 6439C
YS 6439D
YS 6439E
YS 6439F
DI
ZSC 3963
ZS 3963
HS 6439A
HS 6439B
HS 6439C
HS 6439D
HS 6439E
HS 6439F
EQUIPMENT 1. NORTH BIN GATE 2. LIGHTING
HADR

DSMØ5V

SADR
DO
MS 3993
NL 3993
MS 3995
NL 3995
MS 3997
NL 3997
MS 3999
DI
MI 3993
HS 3993B
MI 3995
HS 3995B
MI 3997
HS 3997B
MI 3999
HS 3999B
EQUIPMENT 1. ODOR CONTROL BLOWER #2 2 HOT WATER CIRCULATION PUMP 3. INTAKE FAN #2 4. POWER ROOF EXH.
HADR

DSMØ5W

SADR
DO
UA 3975
TC 3991
DI
JS 6230
JS 6231
HS 3975A
HS 3975B
LS 6111
LS 6112
HS 3412C
HS 3412D
EQUIPMENT 1. MCC 30, MCC 31 2. ALARM 3. PPMH #11 4. CCMH #12 5. DIG12 PLUG VALVE
HADR

DSMØ5X

SADR
DO
FV 3410
NL 3410A
NL 3410B
NL 3410C
FV 3412
NL 3412A
NL 3412B
NL 3412C
DI
ZSO 3410
ZSC 3410A
HS 3410B
HS 3410C
HS 3410D
ZSO 3412
ZSC 3412
HS 3412A
EQUIPMENT 1. DIGESTER #10 & #12 PLUG VALVES
HADR

DSMØ

SADR
DO
DI
EQUIPMENT
HADR

DSMØ

SADR
DO
DI
EQUIPMENT
HADR

AMMØ2A

MADR
1. ASMØ2A
2. ASMØ2B
3.
4.
5.
6.
7.
8
SOFTWARE TITLES 1. CENTRIFUGE TEMPERATURES
HADR

ASMØ2A

SADR
AI
TE 3941A
TE 3941B
TE 3941C
TE 3941D
TE 3941E
TE 3941
AI
TE 3942
TE 3942A
TE 3942B
TE 3942C
TE 3942D
TE 3942E
EQUIPMENT 1. CENTRIFUGE #1 & #2 TEMPERATURES
HADR

ASMØ2B

SADR
AI
TE 3943
TE 3943A
TE 3943B
TE 3943C
TE 3943D
TE 3943E
AI
EQUIPMENT 1. CENTRIFUGE #3 TEMPERATURES
HADR

SMØ

SADR
DO
DI
EQUIPMENT
HADR

SMØ

SADR
DO
DI
EQUIPMENT
HADR

SMØ

SADR
DO
DI
EQUIPMENT
HADR

SMØ

SADR
DO
DI
EQUIPMENT
HADR

SMØ

SADR
DO
DI
EQUIPMENT
HADR

SMØ

SADR
DO
DI
EQUIPMENT
HADR

AOMØ1A

MADR
AO
SI 3941A
SI 3941B
SI 3941C
SI 3942A
SI 3942B
SI 3942C
EQUIPMENT 1 CENTRIFUGE #1 & #2 SPEED INDICATORS
HADR

AOMØ1B

MADR
AO
TI 3941A
TI 3941B
TI 3941C
TI 3941D
TI 3941E
TI 3942A
TI 3942B
TI 3942C
EQUIPMENT 1. CENTRIFUGE #1 & #2 TEMPERATURE INDICATORS
HADR

AOMØ1C

MADR
AO
TI 3942D
TI 3942E
TI 3943A
TI 3943B
TI 3943C
TI 3943D
TI 3943E
EQUIPMENT 1. CENTRIFUGE #3 TEMPERATURE INDICATORS
HADR

MADR

MADR
1
2
3
4
5
6
7
8
SOFTWARE TITLES
HADR

MADR

MADR
EQUIPMENT
HADR

MADR

MADR
EQUIPMENT
HADR

SADR

SADR
EQUIPMENT
HADR

SADR

SADR
EQUIPMENT
HADR

SADR

SADR
EQUIPMENT
HADR

NOTE: SUGGESTED LAYOUT ONLY. SUBMITTAL REQUIRED.

RECORD DRAWING

DATE:	DRAFTED BY:
AUG. 1988	MCA

THESE RECORD DRAWINGS HAVE BEEN PREPARED, IN PART, ON THE BASIS OF INFORMATION COMPILED AND FURNISHED BY OTHERS. THE ENGINEER WILL NOT BE RESPONSIBLE FOR ANY ERRORS OR OMISSIONS WHICH HAVE BEEN INCORPORATED INTO THIS DOCUMENT AS A RESULT.

1 2 3 4 5 6 7 8 9 10 11 12 13 14 15 16 17 18 19 20 21 22 23 24 25 26 27 28 29

26 3694838 8

NO.	DATE	REVISIONS	APPROVED

DESIGNED DD
DRAWN STAFF
CHECKED
APPROVED
APPROVED
DATE 5-88

MOLZEN-CORBIN
STANLEY CONSULTANTS
A JOINT VENTURE

NONE
GRAPHIC SCALE

CITY OF ALBUQUERQUE, NEW MEXICO
SOLIDS HANDLING FACILITIES
PHASE II B- , CONTRACT

INTERIM SLUDGE DEWATERING FACILITIES
PCU MODULE LAYOUT

M-C NO. 832221
I-20
83 OF 112
SC NO.

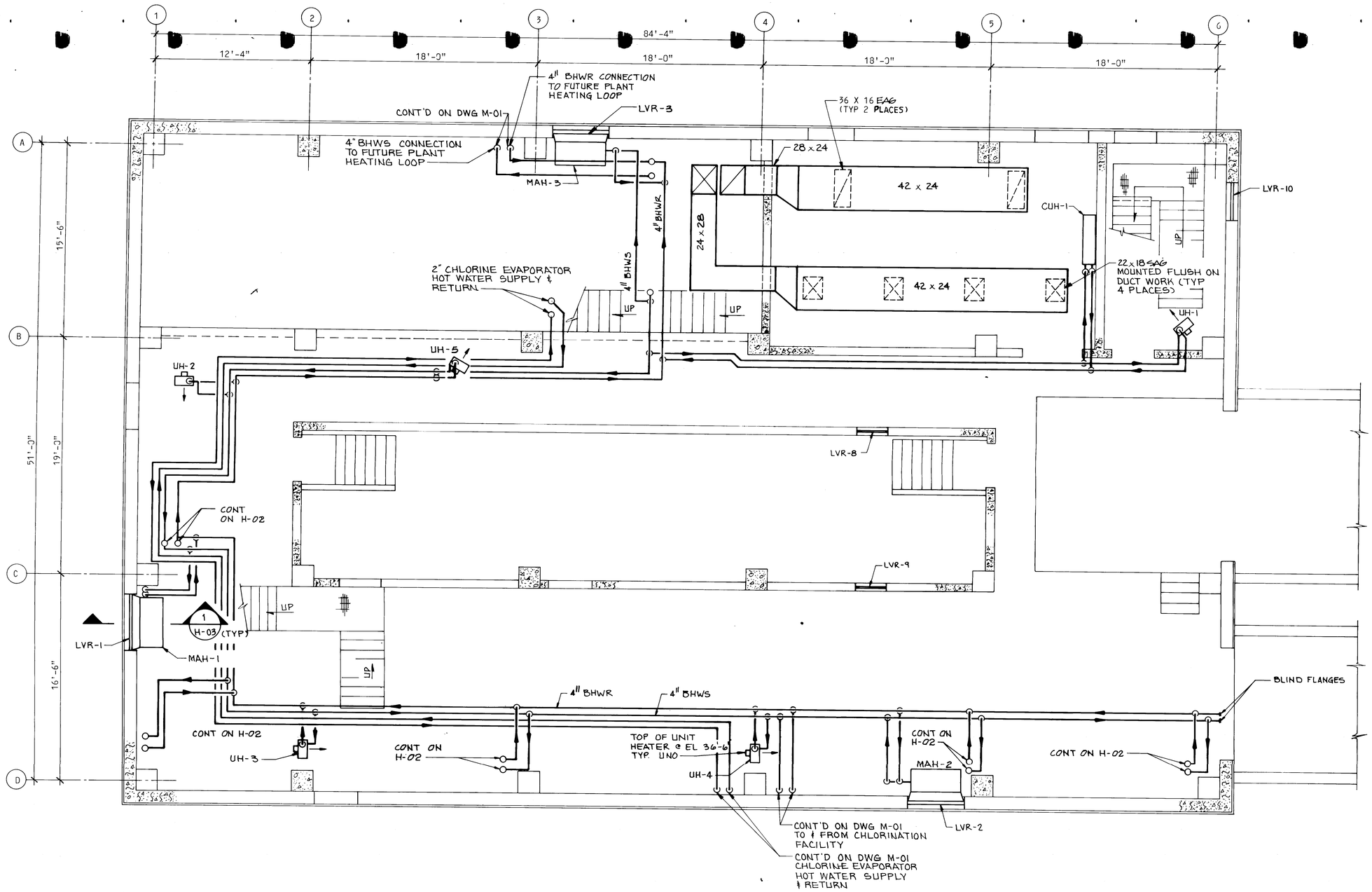

NOTES:

TOP OF DUCT WORK AT EL 36'-6"(±) UNLESS NOTED OTHERWISE.

RECORD DRAWING	
DATE: AUG. 1988	DRAFTED BY: MCA

THESE RECORD DRAWINGS HAVE BEEN PREPARED, IN PART, ON THE BASIS OF INFORMATION COMPILED AND FURNISHED BY OTHERS. THE ENGINEER WILL NOT BE RESPONSIBLE FOR ANY ERRORS OR OMISSIONS WHICH HAVE BEEN INCORPORATED INTO THIS DOCUMENT AS A RESULT.

RICHARD B. DEAN NEW MEXICO 9184 REGISTERED PROFESSIONAL ENGINEER

1 2 3 4 5 6 7 8 9 10 11 12 13 14 15 16 17 18 19 20 21 22 23 24 25 26 27 28 29
2 6 3 6 9 4 8 4 8 8

NO.	DATE	REVISIONS	APPROVED
1	4-22-88	FINAL DRAWING	CL Meyer

DESIGNED BW Johnson
DRAWN RJ. HANSON
CHECKED BW Johnson
APPROVED RB Dean
APPROVED
DATE MAY 31, 1985

MOLZEN-CORBIN
STANLEY CONSULTANTS
A JOINT VENTURE

1/4"=1'-0"
0 4' 6' 8'
GRAPHIC SCALE

CITY OF ALBUQUERQUE, NEW MEXICO
SOLIDS HANDLING FACILITIES
PHASE II B-3, CONTRACT 1

INTERIM SLUDGE DEWATERING FACILITIES
DEWATERING BUILDING
HVAC GROUND FLOOR PLAN

M-C NO.
H-01
84 OF 112
SC NO. 8496-H1

© STANLEY CONSULTANTS

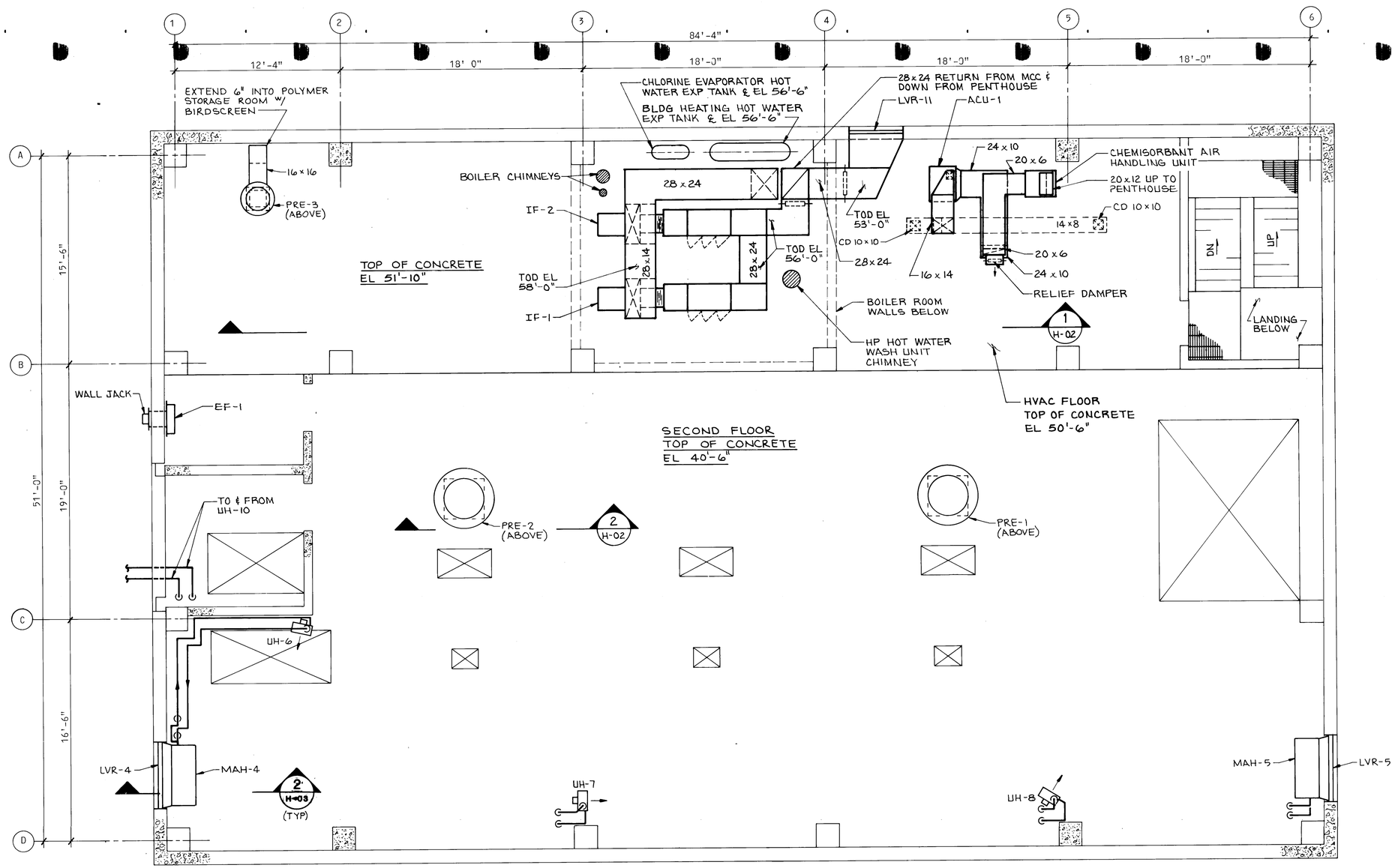

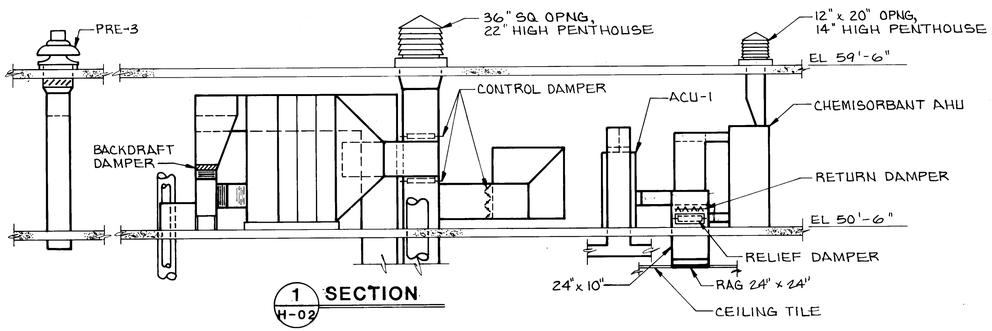

1 SECTION H-02

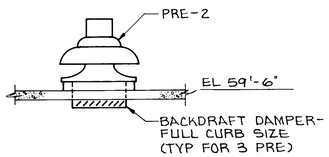

2 SECTION H-02

RECORD DRAWING

DATE:	DRAFTED BY:
AUG. 1988	MCA

THESE RECORD DRAWINGS HAVE BEEN PREPARED, IN PART, ON THE BASIS OF INFORMATION COMPILED AND FURNISHED BY OTHERS. THE ENGINEER WILL NOT BE RESPONSIBLE FOR ANY ERRORS OR OMISSIONS WHICH HAVE BEEN INCORPORATED INTO THIS DOCUMENT AS A RESULT.

RICHARD B. DEAN NEW MEXICO 9184 REGISTERED PROFESSIONAL ENGINEER

1 2 3 4 5 6 7 8 9 10 11 12 13 14 15 16 17 18 19 20 21 22 23 24 25 26 27 28 29
2 6 3 6 9 4 8 5 8 8

NO.	DATE	REVISIONS	APPROVED
1	4-22-88	FINAL DRAWING	C.L. Mayer

DESIGNED B.J. Johnson
DRAWN R.J. HANSON
CHECKED B.J. Johnson
APPROVED R.B. Dean
APPROVED
DATE MAY 31, 1985

MOLZEN-CORBIN
STANLEY CONSULTANTS
A JOINT VENTURE

1/4"=1'-0"

0 4' 6' 8'
GRAPHIC SCALE

CITY OF ALBUQUERQUE, NEW MEXICO
SOLIDS HANDLING FACILITIES
PHASE II B-3, CONTRACT 1

INTERIM SLUDGE DEWATERING FACILITIES
DEWATERING BUILDING
HVAC SECOND FLOOR PLAN

M-C NO. H-02 85 of 112
SC NO. 3496-H2

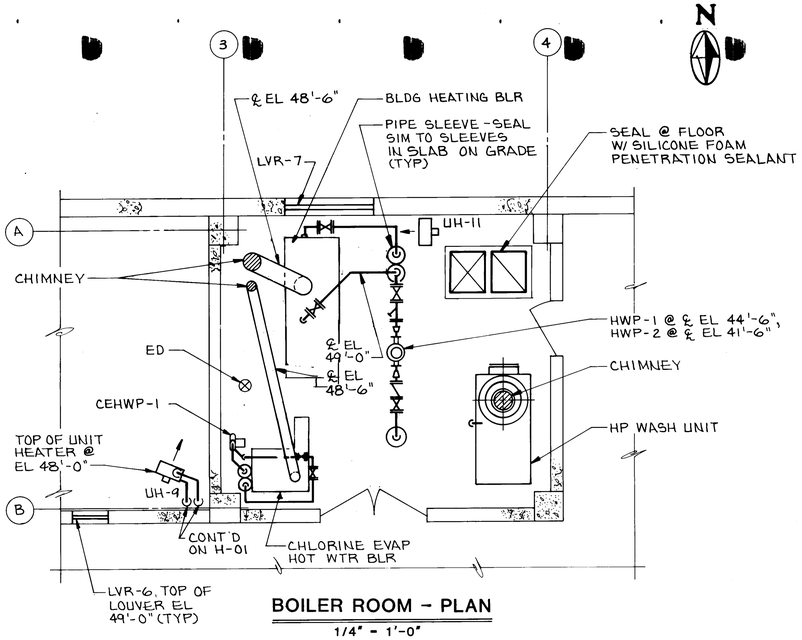

BOILER ROOM - PLAN

1/4" = 1'-0"

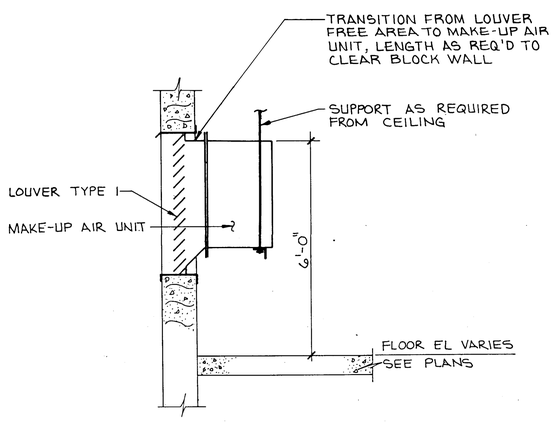

1 H-01 / 2 H-02 **SECTION**

1/2" = 1'-0"

RECORD DRAWING

DATE:	DRAFTED BY:
AUG. 1988	MCA

THESE RECORD DRAWINGS HAVE BEEN PREPARED, IN PART, ON THE BASIS OF INFORMATION COMPILED AND FURNISHED BY OTHERS. THE ENGINEER WILL NOT BE RESPONSIBLE FOR ANY ERRORS OR OMISSIONS WHICH HAVE BEEN INCORPORATED INTO THIS DOCUMENT AS A RESULT.

RICHARD B. DEAN NEW MEXICO 9184 REGISTERED PROFESSIONAL ENGINEER

1 2 3 4 5 6 7 8 9 10 11 12 13 14 15 16 17 18 19 20 21 22 23 24 25 26 27 28 29

2 6 3 6 9 4 8 6 8 8

NO.	DATE	REVISIONS	APPROVED
1	4-22-88	FINAL DRAWING	C.L. Meyer

DESIGNED B.W. Weber
DRAWN M. MARTZ
CHECKED B.W. Weber
APPROVED R.B. Dean
APPROVED
DATE MAY 31, 1985

MOLZEN-CORBIN
STANLEY CONSULTANTS
A JOINT VENTURE

1/2"=1'-0" 0 1' 2' 3' 4'
1/4"=1'-0" 0 4' 6' 8'
GRAPHIC SCALE

CITY OF ALBUQUERQUE, NEW MEXICO
SOLIDS HANDLING FACILITIES
PHASE II B-3, CONTRACT 1

INTERIM SLUDGE DEWATERING FACILITIES
DEWATERING BUILDING
HVAC SECTIONS AND DETAILS

M-C NO. H-03 86 of 112
SC NO. 8496-H3

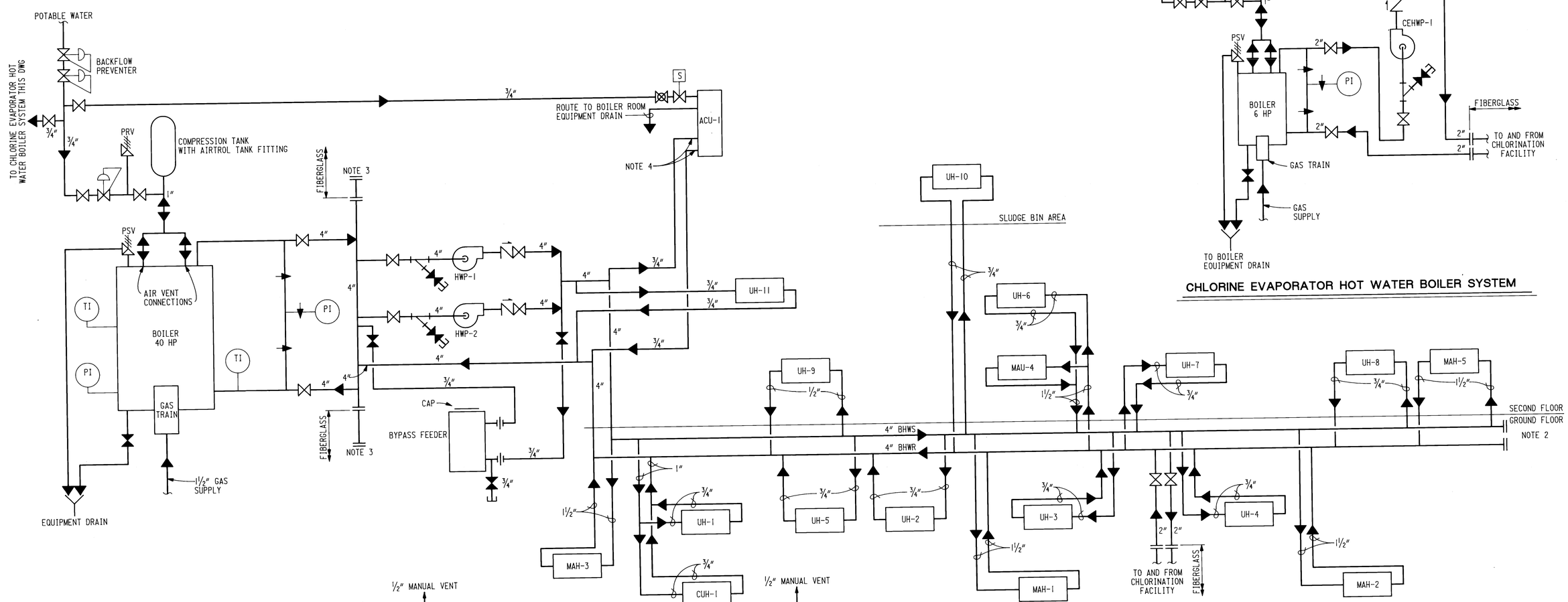

CHLORINE EVAPORATOR HOT WATER BOILER SYSTEM

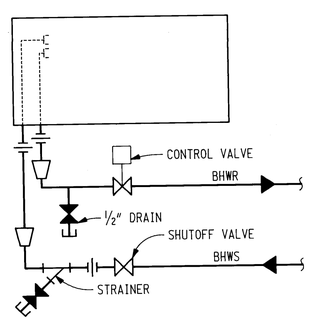

TYPICAL CABINET UNIT HEATER DETAIL

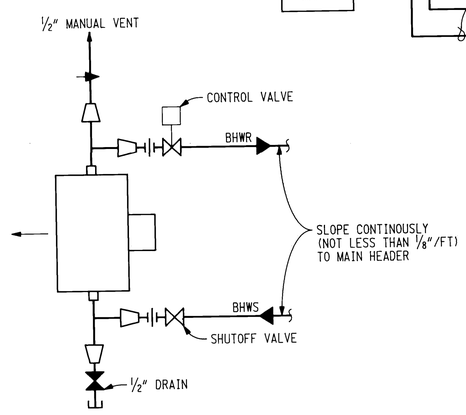

TYPICAL UNIT HEATER DETAIL

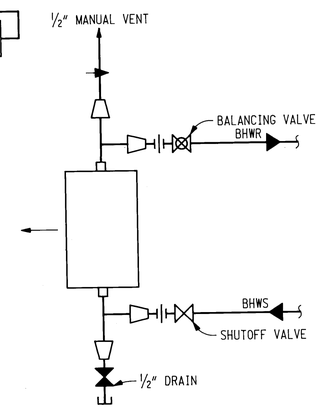

TYPICAL MAKE-UP AIR HEATER DETAIL

NOTES:

1. ALL PIPING THIS DRAWING PER MECHANICAL STANDARD M-1800, UNLESS NOTED OTHERWISE.
2. ANSI 150 LB BLIND FLANGES FOR FUTURE FOURTH CENTRIFUGE EXPANSION.
3. FIBERGLASS 150 LB 4" BLIND FLANGES FOR FUTURE TIE INTO SITE HEATING SYSTEM.
4. ACU-1 HOT WATER PIPING SIMILAR TO TYPICAL UNIT HEATER PIPING.

RECORD DRAWING

DATE:	DRAFTED BY:
AUG. 1988	MCA

THE RECORD DRAWINGS HAVE BEEN PREPARED, IN PART, ON THE BASIS OF INFORMATION COMPILED AND FURNISHED BY OTHERS. THE ENGINEER WILL NOT BE RESPONSIBLE FOR ANY ERRORS OR OMISSIONS WHICH HAVE BEEN INCORPORATED INTO THIS DOCUMENT AS A RESULT.

RICHARD B. DEAN NEW MEXICO 9184 REGISTERED PROFESSIONAL ENGINEER

1 2 3 4 5 6 7 8 9 10 11 12 13 14 15 16 17 18 19 20 21 22 23 24 25 26 27 28 29
26 3 6 9 4 8 7 8 6

NO.	DATE	REVISIONS	APPROVED
1	4-22-88	FINAL DRAWING	C.L. Meyer

DESIGNED R.B. Dean
DRAWN DWR MGHT
CHECKED R.B. Dean
APPROVED R.B. Dean
APPROVED
DATE MAY 31, 1985

MOLZEN-CORBIN
STANLEY CONSULTANTS
A JOINT VENTURE

NO SCALE
GRAPHIC SCALE

CITY OF ALBUQUERQUE, NEW MEXICO
SOLIDS HANDLING FACILITIES
PHASE II B-3, CONTRACT 1

INTERIM SLUDGE DEWATERING FACILITIES
DEWATERING BUILDING
HVAC HEATING WATER PIPING SCHEMATIC

M-C NO. H-04
87 OF 112
SC NO. 8496-H4

NOTES FOR PIPE SUPPORTS

1 ALL REFERENCES IN LISTING ON M-701 ARE TO PRODUCTS OF THE GRINNELL CORPORATION AND ARE USED TO INDICATE THE TYPE AND QUALITY OF PRODUCT DESIRED. PRODUCTS OF OTHER MANUFACTURERS WHICH ARE SIMILAR IN CONSTRUCTION AND EQUAL IN QUALITY MAY BE SUBSTITUTED.

2 PIPING SUPPORTS SHALL BE AS RECOMMENDED BY THE MANUFACTURER FOR THE EXPECTED LOAD AND SERVICE AND SHALL BE SUBJECT TO THE APPROVAL OF THE ENGINEER.

3 ALL PIPING SUPPORTS SHALL PROVIDE A MEANS OF ADJUSTMENT FOR LEVELING, GRADING OF PIPING AND COLD SPRING MOVEMENTS.

4 ALL PIPING SUBJECT TO VERTICAL MOVEMENT SHALL BE SUPPORTED ON SPRING HANGERS. VARIABLE SPRING HANGERS PER TABULATION BELOW.

PIPE MOVEMENT	HANGER FIGURE NO.
1/8" AND LESS	82
1/8" to 1/2"	B268
1/2" to 1"	98

USE CONSTANT LOAD HANGERS FOR ALL PIPE MOVEMENTS 1" AND MORE. USE TOTAL TRAVEL IN EXCESS OF PIPE TRAVEL PER FOLLOWING TABULATION:

PIPE MOVEMENT	MINIMUM EXCESS TOTAL TRAVEL
UNDER 4"	1"
4" TO 6"	1-1/2"
6" TO 8"	1-3/4"
8" AND MORE	2"

PROVIDE ALL CONSTANT LOAD HANGERS WITH TRAVEL STOPS TO SECURE AGAINST ALL VERTICAL MOVEMENT DURING ERECTION AND HYDROSTATIC TEST.

5 PROVIDE SPRING HANGERS WITH SUFFICIENT ROD LENGTH TO PREVENT HORIZONTAL PIPE MOVEMENTS FOR DISPLACING RODS OVER 4° FROM VERTICAL. BEAM ATTACHMENT MAY BE OFFSET FROM PIPE ATTACHMENT IF REQUIRED.

6 DETERMINE HANGER SPANS SO THAT SUM OF LONGITUDINAL STRESS IN PIPE CAUSED BY PIPE WEIGHT AND INTERNAL PRESSURE DOES NOT EXCEED ALLOWABLE WORKING STRESS OF PIPE MATERIAL AT OPERATING TEMPERATURE. IN NO CASE EXCEED SPAN SHOWN ON M-710.

REVISIONS	DATE	DWN	APP	
1-GENERAL	9-25-75	PIW	HFG	DRAWN J.A.C. CHECKED J.L.H. APPROVED HFG APPROVED DATE 4-24-67

MECHANICAL STANDARD PIPE SUPPORTS | PIPE SUPPORT NOTES | SCALE NONE | NO. M-700 | SHEET 1 OF 2 | REV. 1

---

7 MAXIMUM SUPPORT ROD LOADING WITH ROD TEMPERATURE BELOW 650 F PER FOLLOWING TABLE:

ROD SIZE, IN.	MAX. LOAD, LB.	ROD SIZE, IN.	MAX. LOAD, LB.	ROD SIZE, IN.	MAX. LOAD, LB.
3/8	610	1-1/8	6230	2-1/4	27200
1/2	1130	1-1/4	8000	2-1/2	33500
5/8	1810	1-1/2	11630	2-3/4	41600
3/4	2710	1-3/4	15690	3	50600
7/8	3770	1-7/8	18430	3-1/4	60500
1	4960	2	20690	3-1/2	71260

8 CHECK ALL SUPPORTS UNDER OPERATING CONDITIONS DURING INITIAL PERIODS OF OPERATION. MAKE ALL CHANGES AND ADJUSTMENTS AND ADD SUCH ADDITIONAL SUPPORTS, GUIDES AND BRACES REQUIRED TO PROVIDE INSTALLATION SATISFACTORY TO THE ENGINEER.

9 PROVIDE LOCK NUT AT ALL POINTS HANGER RODS ARE THREADED INTO TOP ATTACHMENTS, TURN BUCKLES, HANGERS, ETC.

REVISIONS	DATE	DWN	APP	
1-GENERAL	9-25-75	PIW	HFG	DRAWN J.A.C. CHECKED J.L.H. APPROVED HFG APPROVED HFG DATE 4-24-67

MECHANICAL STANDARD PIPE SUPPORTS | PIPE SUPPORT NOTES | SCALE NONE | NO. M-700 | SHEET 2 OF 2 | REV. 1

LIST OF MATERIALS FOR PIPE SUPPORTS

1 STRUCTURAL MEMBER CLAMPS - NO. 292, NO. 225 OR NO. 226.

2 WELDLESS EYE NUT - NO. 290.

3 TURNBUCKLE - NO. 230.

4 HANGER ROD - NO. 140.

5 PIPE CLAMP: FOR BARE PIPE - NO. 212 OR 216.
FOR INSULATED PIPE BELOW 750 F - NO. 295.
FOR INSULATED PIPE ABOVE 750 F - NO. 224, 246 OR 295A.

6 CLEVIS - NO. 299.

7 ADJUSTABLE SWINGING FLANGE - NO. 156 NOT FOR POWER PIPING.

8 CONCRETE INSERT - NO. 279 OR 282.

9 STEEL BRACKET NO. 195 OR 199.

10 PHILLIPS CONCRETE FASTENER - TO BE USED WITHIN LOAD LIMITS SPECIFIED BY MANUFACTURER; 2" MAX. PIPE SIZE, COLD NONFLAMMABLE SERVICE ONLY.

11 SPRING HANGER - NO. 82, B268 OR 98.

12 INSULATION PROTECTION SADDLE - SIMILAR TO NO. 160 FOR PIPE BELOW 750 F OR TO NO. 165A FOR PIPE ABOVE 750 F - TO SUIT INSULATION THICKNESS.

13 PIPE SLIDE ASSEMBLY - NO. 257 FOR PIPING BELOW 750 F.

14 STRUCTURAL STEEL MEMBER (I SECTION OR EQUAL) OF SUFFICIENT STRENGTH TO ABSORB FORCES INVOLVED.

15 PLATE LUG, SAME MATERIAL AS PIPE. PREHEAT, WELD AND STRESS RELIEVE SAME AS PIPE. LUG AND WELD SIZE TO SUIT SUPPORT LOAD AND ALLOWABLE WORKING STRESS OF PIPE MATERIAL.

16 WELDED EYE ROD - NO. 278 OR 278L.

17 RISER CLAMP - CARBON STEEL TO 750 F. ALLOY STEEL ABOVE 750 F.

18 PIPE AND COMPANION FLANGE SAME SIZE AS SUPPORTED PIPE UP TO 3"; 3" FOR SUPPORTED PIPE 3" to 12". FOR LARGER SIZES CONSULT ENGINEER. SUPPORTING PIPE MATERIAL SAME AS SUPPORTED PIPE; FLANGE CARBON STEEL.

19 U-BOLT - NO. 137 CARBON STEEL TO 750 F. ALLOY STEEL ABOVE 750 F.

20 CONSTANT SUPPORT HANGER - MODEL R.

REVISIONS	DATE	DWN	APP	
2-NOTE 24	7-29-77	RJH	HFG	DRAWN J.A.C. CHECKED J.L.H. APPROVED HFG
1-GENERAL	9-25-75	PIW	HFG	APPROVED DATE 4-24-67

MECHANICAL STANDARD PIPE SUPPORTS | PIPE SUPPORT MATERIAL LIST | SCALE NONE | NO. M-701 | SHEET 1 OF 2 | REV. 2

---

21 WELDED ATTACHMENT FABRICATED OF SAME MATERIAL AS PIPE. USE 1/4" PLATE FOR PIPE SIZES THROUGH 4"; 3/8" PLATE FOR PIPE SIZES 5" THROUGH 12"; 1/2" PLATE FOR PIPE SIZES OVER 12".

22 PLATE WITH NO. 66 WELDED BEAM ATTACHMENT. PLATE THICKNESS SAME AS BEAM ATTACHMENT STOCK.

23 TRAPEZE ASSEMBLY - TYPE G.

24 UTILIZE SPECIAL WELDING TECHNIQUE REQUIRED BY LATEST EDITION OF AWS D1.1.

NOTE: ALL REFERENCES IN LISTING ARE TO PRODUCTS OF THE GRINNELL CORPORATION AND ARE USED TO INDICATE THE TYPE AND QUALITY OF PRODUCT DESIRED. PRODUCTS OF OTHER MANUFACTURERS WHICH ARE SIMILAR IN CONSTRUCTION AND EQUAL IN QUALITY MAY BE SUBSTITUTED.

SEE DRAWING M-700 FOR ADDITIONAL NOTES.

RECORD DRAWING

DATE: AUG. 1988 | DRAFTED BY: MCA

THESE RECORD DRAWINGS HAVE BEEN PREPARED, IN PART, ON THE BASIS OF INFORMATION COMPILED AND FURNISHED BY OTHERS. THE ENGINEER WILL NOT BE RESPONSIBLE FOR ANY ERRORS OR OMISSIONS WHICH HAVE BEEN INCORPORATED INTO THIS DOCUMENT AS A RESULT.

REVISIONS	DATE	DWN	APP	
2-NOTE 24	7-29-77	RJH	HFG	DRAWN J.A.C. CHECKED J.L.H. APPROVED HFG
1-GENERAL	9-25-75	PIW	HFG	APPROVED DATE 4-24-67

MECHANICAL STANDARD PIPE SUPPORTS | PIPE SUPPORT MATERIAL LIST | SCALE NONE | NO. M-701 | SHEET 2 OF 2 | REV. 2

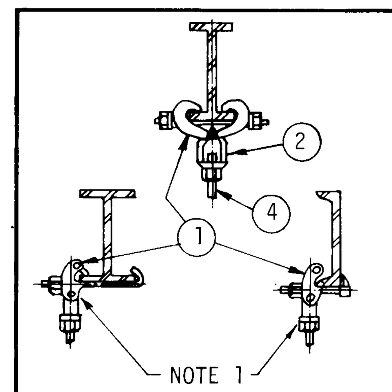

STRUCTURAL MEMBER CLAMPS

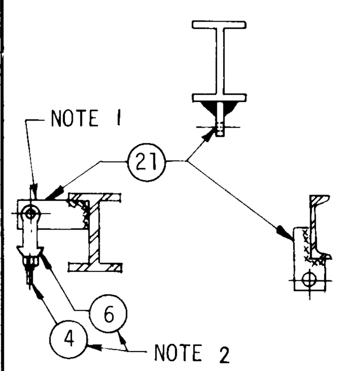

WELDED CONNECTION TO STRUCTURAL MEMBER

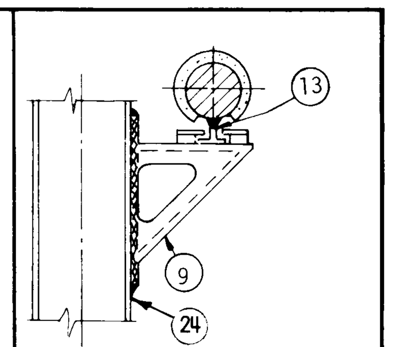

GUIDED BRACKET SUPPORT

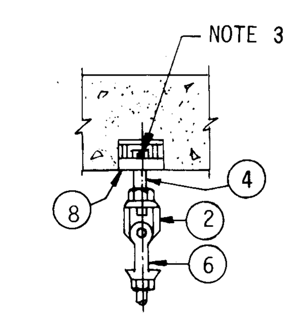

CONNECTION TO NEW CONCRETE

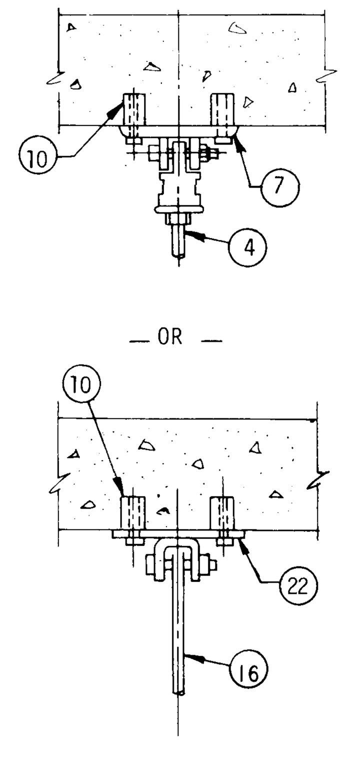

CONNECTION TO EXISTING CONCRETE

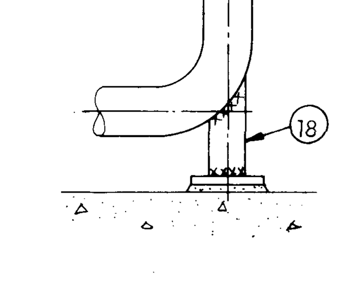

BASE ELBOW

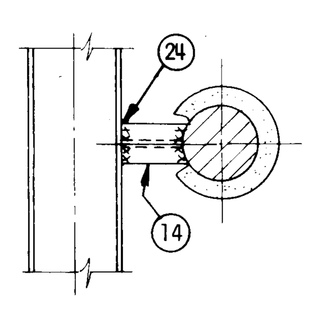

TYPICAL ANCHOR TO STEEL MEMBER

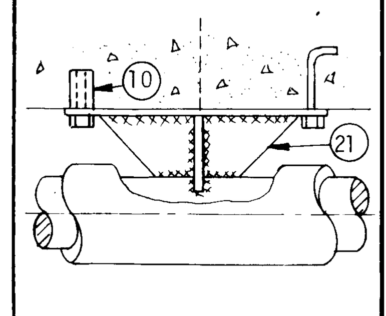

TYPICAL ANCHOR TO CONCRETE

REVISIONS	DATE	DWN	APP	
2-NOTE 24	7-29-77	RJH	HFG	DRAWN C.R.H. CHECKED J.L.H. APPROVED HFG
1-GENERAL	9-25-75	PIW	HFG	APPROVED DATE 4-24-67

MECHANICAL STANDARD PIPE SUPPORTS | TOP ATTACHMENT AND MISCELLANEOUS SUPPORTS | SCALE NONE | NO. M-702 | SHEET 1 OF 2 | REV. 2

NOTES

1 TO BE USED ONLY WITH SPECIFIC APPROVAL OF ENGINEER.

2 TYPICAL.

3 REINFORCING STEEL THREADED THROUGH INSERT.

4 SEE DRAWING M-701 FOR LIST OF MATERIALS REFERRED TO BY NUMBERS.

REVISIONS	DATE	DWN	APP	
2-NOTE 24	7-29-77	RJH	HFG	DRAWN J.A.C. CHECKED J.L.H. APPROVED HFG
1-GENERAL	9-25-75	PIW	HFG	APPROVED DATE 4-24-67

MECHANICAL STANDARD PIPE SUPPORTS | TOP ATTACHMENT AND MISCELLANEOUS SUPPORTS | SCALE NONE | NO. M-702 | SHEET 2 OF 2 | REV. 2

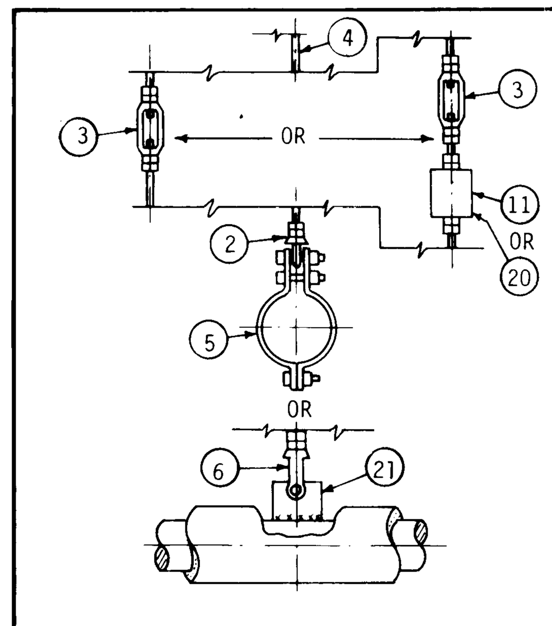

SINGLE ROD HANGER

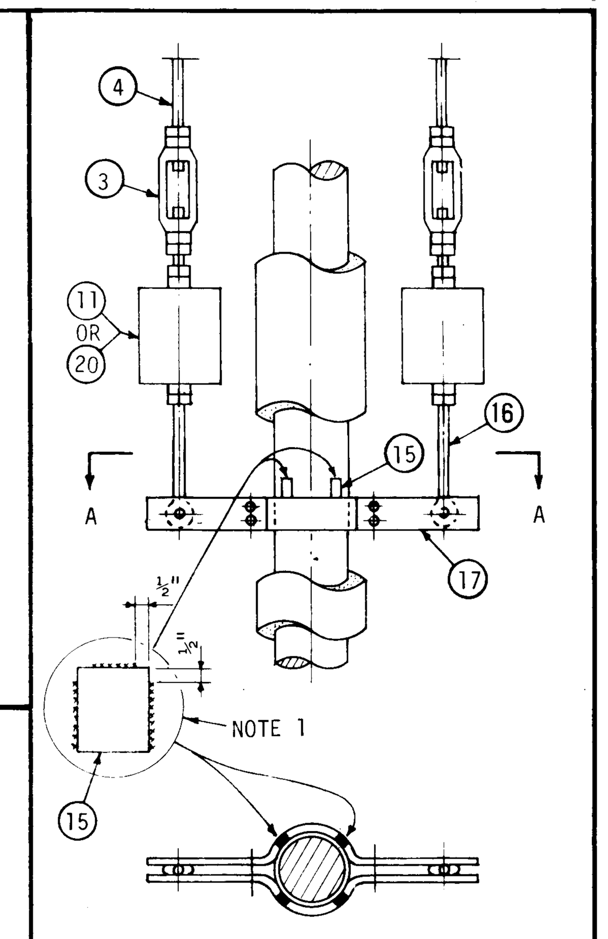

SECTION A-A

DOUBLE ROD HANGER VERTICAL PIPE

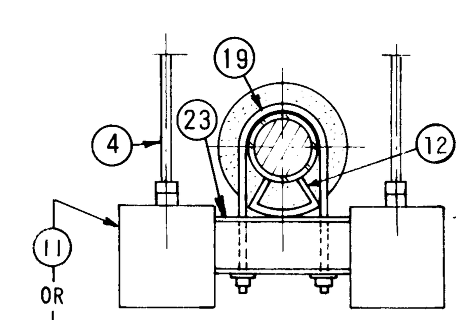

DOUBLE ROD HANGER SPRING SUPPORTED

NOTES

1 NO WELD ON BOTTOM OR TOP CORNERS OF LUG.

2 SEE DRAWING M-701 FOR LIST OF MATERIALS REFERRED TO ABOVE BY NUMBERS.

REVISIONS	DATE	DWN	APP	
1-GENERAL	9-25-75	PIW	HFG	DRAWN C.R.H. CHECKED J.L.H. APPROVED HFG APPROVED DATE 4-24-67

MECHANICAL STANDARD PIPE SUPPORTS | STANDARD HANGERS | SCALE NONE | NO. M-703 | REV. 1

TABLE OF HORIZONTAL PIPE SUPPORT SPACING
FOR FIELD FABRICATION FROM RANDOM MATERIAL

PIPE SIZE INCHES	STD. & X.H. STEEL AT MAXIMUM OF 750F	COPPER TUBING	FIBER-GLASS	PLASTIC	CAST IRON WATER	CAST IRON SOIL	MINIMUM ROD SIZE
3/4	7	5	FOLLOW PIPE MANUFACTURER'S RECOMMENDATIONS FOR MATERIAL AND SERVICE TEMPERATURE.	FOLLOW PIPE MANUFACTURER'S RECOMMENDATIONS FOR MATERIAL AND SERVICE TEMPERATURE.	12'-0" MAX. SPACING, MINIMUM OF ONE (1) HANGER PER PIPE SECTION AT THE JOINTS; ALSO AT CHANGE OF DIRECTION AND BRANCH CONNECTIONS.	10'-0" MAX. SPACING, MINIMUM OF ONE (1) HANGER PER PIPE SECTION AT THE JOINTS; ALSO AT CHANGE OF DIRECTION AND BRANCH CONNECTIONS.	3/8" Φ
1	7	6					3/8" Φ
1 1/4	7	7					3/8" Φ
1 1/2	9	8					3/8" Φ
2	10	8					3/8" Φ
2 1/2	11	9					1/2" Φ
3	12	10					1/2" Φ
4	14	12					5/8" Φ
5	16	13					5/8" Φ
6	17	14					3/4" Φ
8	19	16					7/8" Φ
10	22						7/8" Φ
12	23						7/8" Φ
14	25						1" Φ
16	27						1" Φ
18	28						1 1/8" Φ
20	30						1 1/4" Φ
24	32						1 1/2" Φ

NOTES

1 SPACINGS SHOWN IN TABLE ARE IN FEET.

2 ADDITIONAL SUPPORTS SHALL BE LOCATED NEAR VALVES OR OTHER LARGE CONCENTRATED LOADS.

RICHARD B. DEAN NEW MEXICO 9184 REGISTERED PROFESSIONAL ENGINEER

REVISIONS	DATE	DWN	APP	
1-GENERAL	9-25-75	PIW	HFG	DRAWN J.A.C. CHECKED J.L.H. APPROVED HFG APPROVED DATE 4-24-67

MECHANICAL STANDARD PIPE SUPPORTS | PIPE SUPPORT SPACING TABLE | SCALE NONE | NO. M-710 | REV. 1

26 36948888

NO.	DATE	REVISIONS	APPROVED
1	4-22-88	FINAL DRAWING	CLMeyer

DESIGNED BW Johnson
DRAWN M MARTZ
CHECKED BW Johnson
APPROVED RBDean
APPROVED
DATE MAY 31, 1985

MOLZEN-CORBIN
STANLEY CONSULTANTS
A JOINT VENTURE

GRAPHIC SCALE

CITY OF ALBUQUERQUE, NEW MEXICO
SOLIDS HANDLING FACILITIES
PHASE II B-3, CONTRACT 4

INTERIM SLUDGE DEWATERING FACILITIES
DEWATERING BUILDING
MECHANICAL STANDARDS AND EQUIPMENT SCHEDULES-SHEET 1

M-C NO. H-05 | 88 of 112
SC NO. 8496-H5

CONTROL ROOM AIR CONDITIONING UNIT

DESIGNATION	TYPE	FAN DATA				FAN MOTOR DATA				COOLING COIL DATA						HEATING COIL DATA					REMARKS
		CFM	UNIT EXTERNAL SP INCHES WATER	TYPE DRIVE	TYPE FAN	HP	VOLT	PHASE	HERTZ	TYPE	ENTER WET BULB TEMP	ENTER DRY BULB TEMP	LEAVING DRY BULB TEMP	TOTAL SENSIBLE HEAT BTUH	GRAND TOTAL HEAT BTUH	TYPE	EWT	EAT	LAT	HEATING CAP BTUH	
CONTROL ROOM AIR CONDITIONING UNIT	FLOOR MOUNTED VERTICAL WATER COOLED	1000	1.0	BELT	CENTRIFUGAL	3/4	460	3	60	DIRECT EXPANSION	65°F	79.7°F	59°F	22,800	24,200	HOT WATER	180°F	62.8°F	74.2°F	12,500	COOLING WATER IS CITY WATER AT 70°F MAX

MAKE-UP AIR HEATER SCHEDULE

DESIGNATION	TYPE DISCHARGE	AIR HANDLING DATA					WATER DATA		
		SCFM [1]	ENTER AIR TEMP	LEAVING AIR TEMP	PD-IN [2] H_2O	MBTUH	GPM	ENTER TEMP	PD-FT H_2O
MAH-1	HORIZONTAL	2400	16°F	61°F	0.14	117.2	17.6	180°F	1.3
MAH-2	HORIZONTAL	2400	16°F	61°F	0.14	117.2	17.6	180°F	1.3
MAH-3	HORIZONTAL	2400	16°F	61°F	0.14	117.2	17.6	180°F	1.3
MAH-4	HORIZONTAL	4150	16°F	60°F	0.17	198.1	23.5	180°F	1.4
MAH-5	HORIZONTAL	4150	16°F	60°F	0.17	198.1	23.5	180°F	1.4

NOTES:

1. PLANT ELEVATION 5000 FEET ABOVE SEA LEVEL.
2. BASED ON ACTUAL AIR FLOW VOLUME.

PUMP SCHEDULE

DESIGNATION	TYPE	FLOW RATE GPM	HEAD FT H_2O	MOTOR DATA				
				HP	RPM	VOLT	PHASE	HERTZ
HWP-1	IN-LINE CENTRIFUGAL	175	32	3	1750	460	3	60
HWP-2	IN-LINE CENTRIFUGAL	175	32	3	1750	460	3	60
CEHWP-1	IN-LINE CENTRIFUGAL	50	40	1½	1750	460	3	60

FAN SCHEDULE

DESIGNATION	TYPE	TYPE DRIVE	AIR HANDLING DATA		MOTOR DATA				
			CFM	TSP IN H_2O	HP	RPM	VOLT	PHASE	HERTZ
IF-1	BACKWARD CURVED BLADE CENTRIFUGAL	BELT	3600	2.25	3	1750	460	3	60
IF-2	BACKWARD CURVED BLADE CENTRIFUGAL	BELT	3600	2.25	3	1750	460	3	60
EF-1	CEILING BLOWER	DIRECT	189	0.25	1/5	1550	115	1	60
PRE-1	ROOF MOUNTED CENTRIFUGAL	BELT	6500	0.25	1	1725	230/460	3	60
PRE-2	ROOF MOUNTED CENTRIFUGAL	BELT	6500	0.25	1	1725	230/460	3	60
PRE-3	ROOF MOUNTED CENTRIFUGAL	BELT	570	0.25	1/6	1725	115	1	60

LOUVER SCHEDULE

DESIGNATION	LOUVER SIZE (W X H)	TYPE	DEPTH
LVR-1	54 X 42	FIXED TYPE 1	4"
LVR-2	54 X 42	FIXED TYPE 1	4"
LVR-3	54 X 42	FIXED TYPE 1	4"
LVR-4	60 X 48	FIXED TYPE 1	4"
LVR-5	60 X 48	FIXED TYPE 1	4"
LVR-6	24 X 24	FIXED TYPE 2	2"
LVR-7	2 @ 36 X 54	FIXED TYPE 1	4"
LVR-8	30 X 24	FIXED TYPE 2	2"
LVR-9	30 X 24	FIXED TYPE 2	2"
LVR-10	36 X 24	FIXED TYPE 1	4"
LVR-11	48 X 48	FIXED TYPE 1	4"

UNIT HEATER SCHEDULE

DESIGNATION	TYPE DISCHARGE	AIR HANDLING DATA			WATER DATA				MOTOR DATA				
		ENTER AIR TEMP	CFM	EFFECTIVE HEATING THROW FT	GPM	ENTER TEMP	MBH	PD-FT H_2O	HP	RPM	VOLT	PHASE	HERTZ
UH-1	HORIZONTAL	55	700	25	3.3	180	29.8	0.4	1/20	1550	120	1	60
UH-2	HORIZONTAL	55	700	25	3.3	180	29.8	0.4	1/20	1550	120	1	60
UH-3	HORIZONTAL	55	700	25	3.3	180	29.8	0.4	1/20	1550	120	1	60
UH-4	HORIZONTAL	55	700	25	3.3	180	29.8	0.4	1/20	1550	120	1	60
UH-5	HORIZONTAL	55	700	25	3.3	180	29.8	0.4	1/20	1550	120	1	60
UH-6	HORIZONTAL	55	700	25	3.3	180	29.8	0.4	1/20	1550	120	1	60
UH-7	HORIZONTAL	55	700	25	3.3	180	29.8	0.4	1/20	1550	120	1	60
UH-8	HORIZONTAL	55	700	25	3.3	180	29.8	0.4	1/20	1550	120	1	60
UH-9	HORIZONTAL	55	256	20	0.7	180	5.9	0.2	1/20	1550	120	1	60
UH-10	HORIZONTAL	55	700	25	3.3	180	29.8	0.4	1/20	1550	120	1	60
UH-11	HORIZONTAL	55	700	25	3.3	180	29.8	0.4	1/20	1550	120	1	60
CUH-1	CABINET	60	320	NA	2.0	180	26.2	1.0	1/30	1100/900/700	120	1	60

PIPE

MATERIAL ASTM			A53 A OR B TYPE E OR S (1)
MINIMUM PIPE SIZE TO BE USED			1/4"
MINIMUM WALL THICKNESS	PIPE SIZES (INCLUSIVE)		WALL THICKNESS
	1/4" - 2"		SCH. 80
	2-1/2" - 6"		SCH. 40
	8" - 12"		SCH. 20
	14" - 24"		SCH. 10

JOINTS

TYPE OF JOINT	SCREWED	SOCKET WELDED	BUTT WELDED	FLANGED
USE FOR PIPE SIZE (INCL)	1/4" - 2"	NONE	2 1/2" & LARGER	2 1/2" & LARGER

FLANGES

MATERIAL, ASTM			—	A105 OR A181 II
PRESSURE CLASS, ANSI				150
FACING				1/16" R.F. OR FLAT FACE (2)
GASKETS				GRANITE 1/16" THICK
BOLT STUDS, ASTM				A307B
NUTS, ASTM				A307B HEX.

FITTINGS

MATERIAL ASTM	A338 MALLEABLE		A234 GRADE WPA OR WPB	A126 B OR C CAST IRON
PRESSURE CLASS, ANSI	150		---	125
MINIMUM WALL THICKNESS	---		SAME AS PIPE	---
WELDING END	---		STD. BEVEL, (5) COM. FLAT RING	---
UNIONS	SCREWED, GROUND JOINT		---	---

VALVES-RISING STEM

BODY MATERIAL, ASTM	B62 BRONZE		NONE	A126 B OR C CAST IRON (4)
PRESSURE CLASS, ANSI	150			125 (4)
BONNET TYPE	UNION			BOLTED
INTERNALS AND TRIM	BRONZE OR COMP. (3)			RENEWABLE BRONZE
BYPASS REQUIRED ON VALVES LARGER THAN	---			---

NOTES

(1) ALL THREADED PIPE SHALL BE SEAMLESS (TYPE S).
(2) USE FLAT FACE FLANGES FOR MATING WITH 125 POUND CAST IRON FLANGES OF VALVES OR EQUIPMENT.
(3) GLOBE VALVES - ASBESTOS COMPOSITION DISCS FOR COLD WATER, AIR OR GAS SERVICE; ALL OTHER SERVICES - BRONZE SEATS AND DISCS.
(4) 125 POUND CAST IRON VALVES LIMITED TO 12" MAXIMUM SIZE. FOR 14" AND LARGER SIZES USE ANSI 150 POUND CAST STEEL VALVES, ASTM A216-WCB.
(5) NO BACKING RING 3-1/2" AND SMALLER.

REVISIONS	DATE	DWN	APP
1-GENERAL	4-20-88	—	NBD
	DATE 4-24-67		

DRAWN C.R.M. CHECKED N.B.D. APPROVED N.B.D. APPROVED [redacted]

MECHANICAL STANDARD PIPING DESIGN TABLE

POWER PIPING CLASS P150A1 150 PSIG 220 F

SCALE NONE NO. M-1800 REV

NOMINAL INSULATION THICKNESS (INCHES)

NOMINAL PIPE SIZE (INCHES)	100°-300°F CLASS A	300°-500°F CLASS B	500°-700°F CLASS C	700°-875°F CLASS D	875°-1200°F CLASS E
1/2	1	1	1 1/2	2	2 1/2
3/4	1	1 1/2	2	2	2 1/2
1	1	1 1/2	2	2 1/2	3
1 1/4	1	1 1/2	2 1/2	3	3
1 1/2	1	2	2 1/2	3	3 1/2
2	1 1/2	2	2 1/2	3 1/2	3 1/2
2 1/2	1 1/2	2	3	3 1/2	4
3	1 1/2	2 1/2	3	4	4 1/2
4	1 1/2	2 1/2	3 1/2	4	4 1/2
5	2	3	4	4 1/2	5
6	2	3	4	5	5 1/2
8	2	3 1/2	4 1/2	5	6
10	2 1/2	3 1/2	4 1/2	5 1/2	6
12 & OVER	2 1/2	3 1/2	4 1/2	5 1/2	6
EQUIPMENT	2 1/2	4	5 1/2	6	7

NOTES

1. INSULATION THICKNESSES SHOWN ABOVE ARE MINIMUM BLOCK THICKNESSES AND DO NOT INCLUDE FINISHING OR SEALING COATS. FOR FINISH COAT OR JACKET, SEE SPECIFICATIONS.
2. ON OUTDOOR EQUIPMENT & PIPING, INSULATION THICKNESS SHOWN ABOVE SHALL BE INCREASED 1/2 INCH.
3. ANTI-SWEAT (CLASS S):

FOR PIPE

30" AND LESS: SECTIONAL PIPE INSULATION, 1 INCH THICK.
OVER 30": EMULSION INSULATION, 3/8 INCH FINAL THICKNESS.

FOR IRREGULAR SURFACES (WATER BOXES, ETC.)

EMULSION INSULATION, 3/8 INCH FINAL THICKNESS.

FOR REGULAR SURFACES (TANKS, COOLER, ETC.)

SECTIONAL OR BLOCK INSULATION, 1 INCH THICK.

REVISIONS	DATE	DWN	APP
	DATE 9-26-74		

DRAWN M.F.J. CHECKED N.B.D. APPROVED [redacted] APPROVED [redacted]

MECHANICAL STANDARD INSULATION

PIPING AND EQUIPMENT INSULATION THICKNESS

SCALE NONE NO. M-1002 REV 0

RECORD DRAWING

DATE: AUG. 1988 | DRAFTED BY: MCA

THESE RECORD DRAWINGS HAVE BEEN PREPARED, IN PART, ON THE BASIS OF INFORMATION COMPILED AND FURNISHED BY OTHERS. THE ENGINEER WILL NOT BE RESPONSIBLE FOR ANY ERRORS OR OMISSIONS WHICH HAVE BEEN INCORPORATED INTO THIS DOCUMENT AS A RESULT.

RICHARD B. DEAN NEW MEXICO 9184 REGISTERED PROFESSIONAL ENGINEER

1 2 3 4 5 6 7 8 9 10 11 12 13 14 15 16 17 18 19 20 21 22 23 24 25 26 27 28 29
2 6 3 6 9 4 8 9 8 8

NO.	DATE	REVISIONS	APPROVED
1	4-22-88	FINAL DRAWING	C.L. Meyer

DESIGNED B.W. Johnson
DRAWN DWRIGHT
CHECKED B.W. Johnson
APPROVED N.B.D.
APPROVED
DATE MAY 31, 1985

MOLZEN-CORBIN STANLEY CONSULTANTS
A JOINT VENTURE

NO SCALE
GRAPHIC SCALE

CITY OF ALBUQUERQUE, NEW MEXICO
SOLIDS HANDLING FACILITIES
PHASE II B-3, CONTRACT 1

INTERIM SLUDGE DEWATERING FACILITIES
DEWATERING BUILDING
HVAC EQUIPMENT SCHEDULES

M-C NO. H-06 | 89 of 112
SC NO. 8496-H6

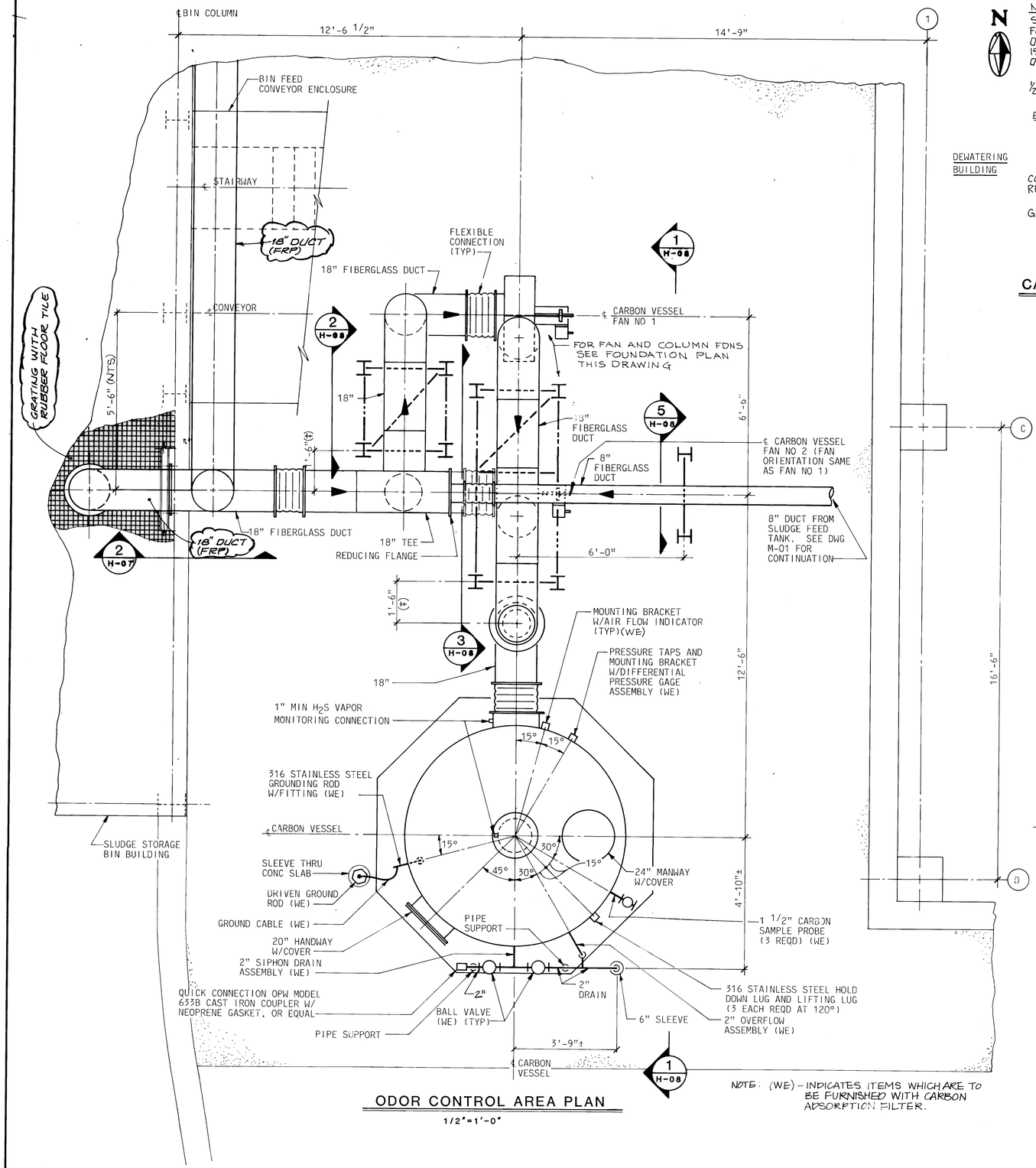

ODOR CONTROL AREA PLAN

1/2"=1'-0"

NOTE: (WE) - INDICATES ITEMS WHICH ARE TO BE FURNISHED WITH CARBON ADSORPTION FILTER.

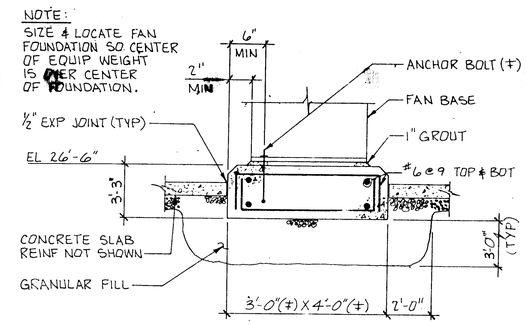

CARBON VESSEL FAN NO.1 AND NO.2 FOUNDATION

3"=1'-0"

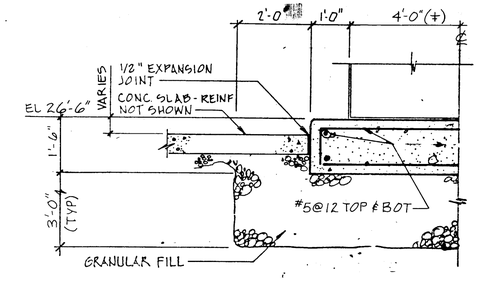

CARBON VESSEL FOUNDATION

3/12"=1'-0"

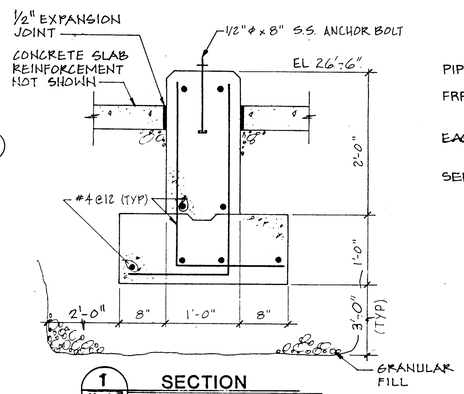

1 H-08 SECTION

1"=1'-0"

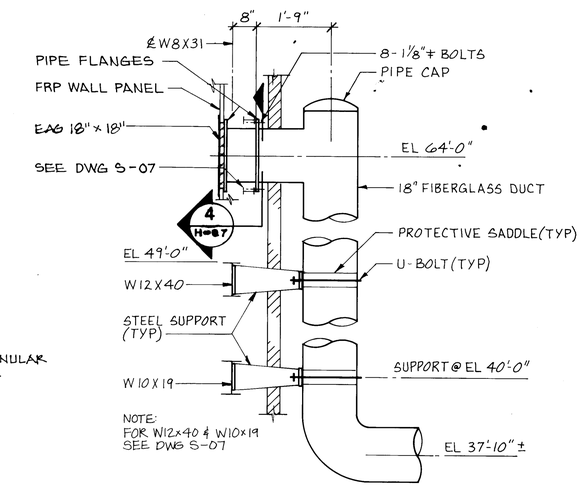

2 H-07 SECTION

1/2"=1'-0"

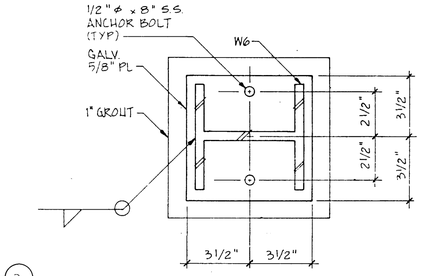

3 H-08 SECTION

3"=1'-0"

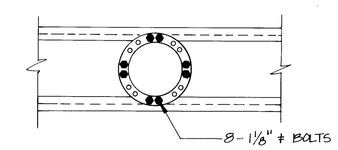

4 H-07 SECTION

NO SCALE

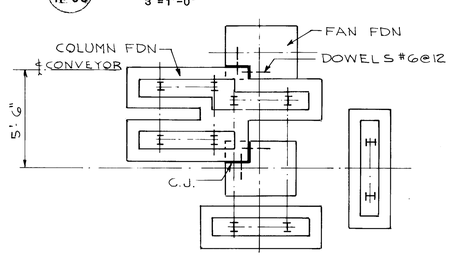

FOUNDATION PLAN

NO SCALE

CHARLES L. MEYER NEW MEXICO 7412 REGISTERED PROFESSIONAL ENGINEER

Charles L. Meyer

RECORD DRAWING	
DATE: AUG. 1988	DRAFTED BY: MCA

THESE RECORD DRAWINGS HAVE BEEN PREPARED, IN PART, ON THE BASIS OF INFORMATION COMPILED AND FURNISHED BY OTHERS. THE ENGINEER WILL NOT BE RESPONSIBLE FOR ANY ERRORS OR OMISSIONS WHICH HAVE BEEN INCORPORATED INTO THIS DOCUMENT AS A RESULT.

1 2 3 4 5 6 7 8 9 10 11 12 13 14 15 16 17 18 19 20 21 22 23 24 25 26 27 28 29

2 6 3 6 9 4 9 0 8 8

NO.	DATE	REVISIONS	APPROVED
1	4-22-88	FINAL DRAWING	C.L. Meyer
2	11-17-89	REVISED RECORD DRAWING	R.A. Clark

DESIGNED WRT
DRAWN B.G. JARRETT
CHECKED WRT
APPROVED C.L. Meyer
APPROVED
DATE MAY 31, 1988

MOLZEN-CORBIN
STANLEY CONSULTANTS
A JOINT VENTURE

1/2"=1'-0" 0 1' 2' 3' 4'
1"=1'-0" 0 1' 2'
GRAPHIC SCALE

CITY OF ALBUQUERQUE, NEW MEXICO
SOLIDS HANDLING FACILITIES
PHASE II B-3, CONTRACT 1

INTERIM SLUDGE DEWATERING FACILITIES
ODOR CONTROL AREA
PLAN AND DETAILS

M-C NO. H-07
90 of 112
SC NO. 8496-H7

© STANLEY CONSULTANTS

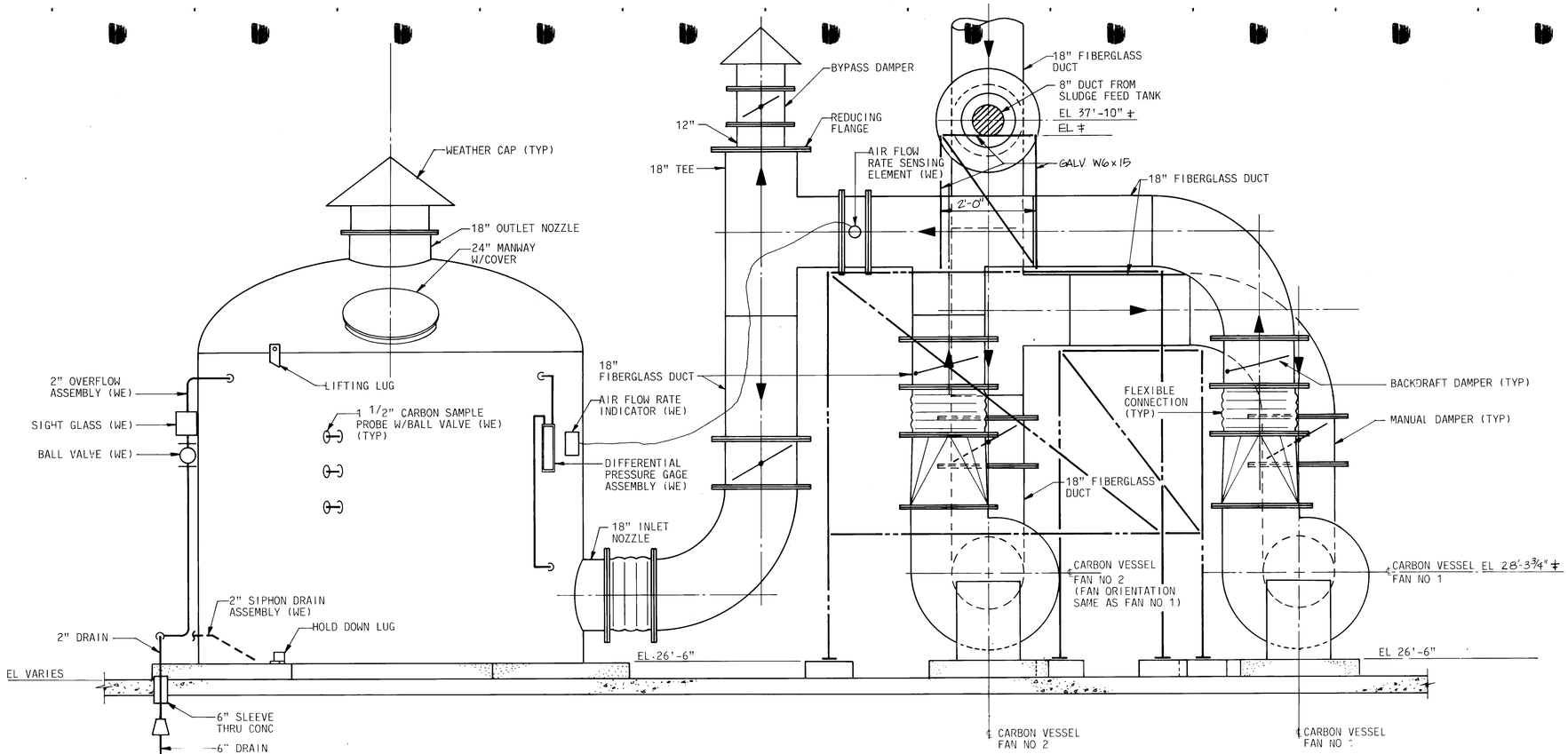

NOTE: (WE) - INDICATES ITEMS WHICH ARE TO BE FURNISHED WITH CARBON ADSORPTION FILTER.

1 H-07 SECTION 3/4"=1'-0"

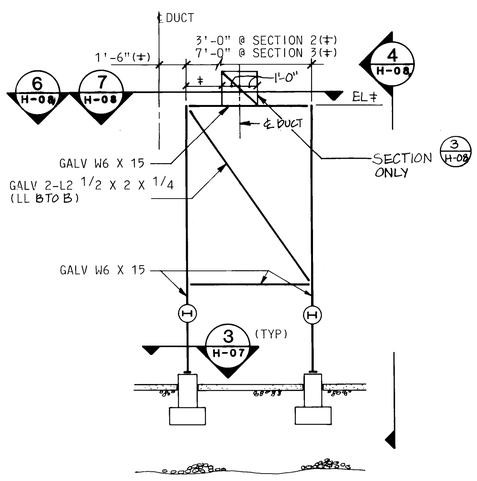

2 H-07 3 H-07 SECTION 1/4"=1'-0"

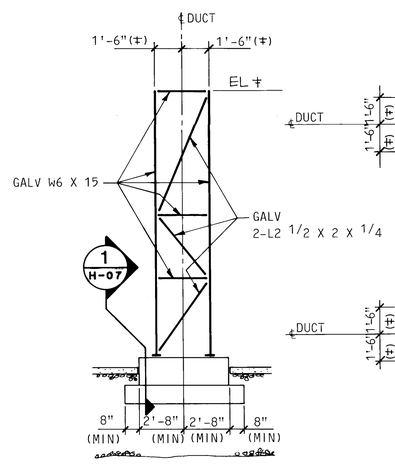

4 H-08 5 H-07 SECTION 1/4"=1'-0"

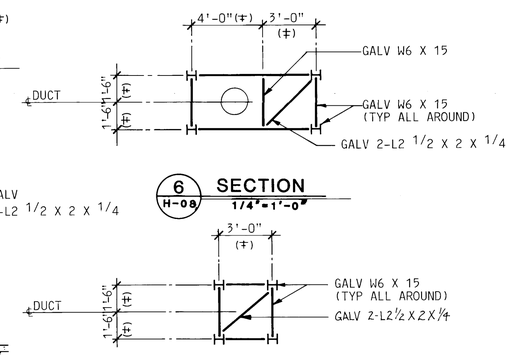

6 H-08 SECTION 1/4"=1'-0"

7 H-08 SECTION 1/4"=1'-0"

RECORD DRAWING

DATE:	DRAFTED BY:
AUG. 1988	MCA

THESE RECORD DRAWINGS HAVE BEEN PREPARED, IN PART, ON THE BASIS OF INFORMATION COMPILED AND FURNISHED BY OTHERS. THE ENGINEER WILL NOT BE RESPONSIBLE FOR ANY ERRORS OR OMISSIONS WHICH HAVE BEEN INCORPORATED INTO THIS DOCUMENT AS A RESULT.

CHARLES L. MEYER NEW MEXICO 7412 REGISTERED PROFESSIONAL ENGINEER

1 2 3 4 5 6 7 8 9 10 11 12 13 14 15 16 17 18 19 20 21 22 23 24 25 26 27 28 29
2 6 3 6 9 4 9 1 8 8

NO.	DATE	REVISIONS	APPROVED
1	4-22-88	FINAL DRAWING	C.L. Meyer

DESIGNED WRT
DRAWN B.G. JARRETT
CHECKED WRT
APPROVED C.L. Meyer
APPROVED
DATE MAY 31, 1985

MOLZEN-CORBIN
STANLEY CONSULTANTS
A JOINT VENTURE

3/4"=1'-0"
1/4"=1'-0"
0 1' 2' 3'
0 4' 6' 8'
GRAPHIC SCALE

CITY OF ALBUQUERQUE, NEW MEXICO
SOLIDS HANDLING FACILITIES
PHASE II B-3, CONTRACT 1

INTERIM SLUDGE DEWATERING FACILITIES
ODOR CONTROL AREA
SECTIONS AND DETAILS

M-C NO. H-08
91 OF 112
SC NO. 8496-H8

PLANS

SYMBOL	DESCRIPTION
	CONDUIT-UNDERGROUND
	CONDUIT-CONCEALED
	CONDUIT-EXPOSED
	CONDUIT-STUBBED AND CAPPED
T	TELEPHONE CONDUIT-PLOT PLAN
I	INSTRUMENTATION CONDUIT-PLOT PLAN
P	PRIMARY DUCT BANK-PLOT PLAN
	CONDUIT THROUGH PITCH POCKET IN ROOF
	CONDUIT SEAL (CLASS I DIVISION I)
	CONDUIT (UP)
	CONDUIT (DOWN)
	UNDERGROUND CABLE
	SERVICE ENTRANCE (OVERHEAD)
	CONDUCTOR NEUTRAL, HOT, SWITCH, GROUND, RESPECTIVELY
	HOMERUNS TO PANELBOARD
	CONDUCTOR 1,2,3, ETC #14 THWN CONTROL
P	PAIRED SHIELDED JACKETED CABLE
	PAIRED JACKETED CABLE
	SAFETY SWITCH (SS), SERVICE DISCONNECT (SD), DISCONNECT SWITCH
MS	MANUAL STARTER
A	SS WITH ASSOCIATED CONTROL STATION
A	CONTROL STATION LETTER DENOTES TYPE, OR LISTED # SUCH AS HS 2410
T	TRANSFORMER
	PANELBOARD
T	PANELBOARD WITH DRY TRANSFORMER ABOVE
	LOCALLY MOUNTED STARTER
	115/200/230V MOTOR
25	460V 3Φ MOTOR-25 HP
16500	REFERENCE TO SPECIFICATION SECTION
2	ELECTRICAL NOTE
SD	SMOKE DETECTOR
T	THERMOSTAT
J JB	JUNCTION BOX IN CONDUIT SYSTEM NOT NECESSARILY A CONDUCTOR SPLICE POINT
TC	TERMINAL CABINET
	GROUNDING ROD
	PLANT INTERCOM
	TELEPHONE
C	CAPACITOR
	RESISTANCE HEATER
	UNIT HEATER
	REMOTE DEVICE SEE DESIGNATION FOR TYPE
	PHOTOELECTRIC RELAY
X J	FLUORESCENT LUMINAIRE X INDICATES TYPE

SYMBOL	DESCRIPTION
X	FLUORESCENT STRIPLIGHT X INDICATES TYPE
X	FLUORESCENT LUMINAIRE WITH EMERGENCY POWER SUPPLY UNIT
X	LUMINAIRE-CEILING MOUNTED X INDICATES TYPE
X	LUMINAIRE-WALL MOUNTED X INDICATES TYPE
	EXIT LIGHT
	FLOOD LIGHT AND POLE SYMBOL INDICATES NEITHER EXACT AIMING DIRECTION, NOR QUANTITY OF LUMINAIRES
EB	EMERGENCY BATTERY UNIT
	EMERGENCY BATTERY LIGHTING HEAD
S	SWITCH, SINGLE POLE
SWP	SWITCH, WEATHERPROOF
S3	SWITCH, 3-WAY
S2P	SWITCH, 2 POLE
SPL	SWITCH WITH PILOT LIGHT
ST	SWITCH WITH THERMAL OVERLOAD PROTECTION
SD	SWITCH, DIMMER
SK	SWITCH, KEY OPERATED
SM	SWITCH, MOMENTARY CONTACT
	RECEPTACLE, DUPLEX
	RECEPTACLE, 4 PLEX
WP	RECEPTACLE, DUPLEX WITH WEATHERPROOF COVER
	RECEPTACLE, DUPLEX WITH PLUG
	RECEPTACLE, GROUND FAULT DUPLEX
WPG	RECEPTACLE, DUPLEX GROUND FAULT WITH WEATHERPROOF COVER
H	RECEPTACLE, DUPLEX HOSPITAL GRADE
FLOOR	RECEPTACLE, DUPLEX FLOOR
H	RECEPTACLE, 4 PLEX HOSPITAL GRADE
	RECEPTACLE, LOCK, WITH CLOCK
	RECEPTACLE, SPECIAL
	MULTI-OUTLET RACEWAY
F	FLOAT SWITCH
FW	FLOW SWITCH
V	VACUUM SWITCH
TQ	TORQUE SWITCH
VIB	VIBRATION SWITCH
SV	SOLENOID VALVE
PS	PRESSURE SWITCH
TS	TEMPERATURE SWITCH
LS	LIMIT SWITCH, PROXIMITY
LS	LIMIT SWITCH, MECHANICAL

FOR INDIVIDUAL LOCAL DEVICES ONLY FOR DEVICES CONNECTED TO THE COMPUTER, A DESIGNATION SUCH AS TS2420 IS USED SEE THE INSTRUMENTATION LEGEND

ONE LINE DIAGRAMS

SYMBOL	DESCRIPTION
	PRIMARY CIRCUIT
	SECONDARY CIRCUIT
	OPERATION
K	KEY INTERLOCK
KVA	TRANSFORMER
	AUTOTRANSFORMER
X	CURRENT TRANSFORMER(S) X = QUANTITY
	THERMAL OVERLOAD ELEMENT
	POTENTIAL TRANSFORMER(S) WITH FUSES
	FIELD SOLENOID
	GROUND
	SURGE ARRESTER
X	FUSE, X INDICATES RATING
X	DRAWOUT TYPE FUSE, X INDICATES AMPS
X	SINGLE-THROW DISCONNECT SWITCH, X INDICATES AMPS
	DOUBLE THROW SWITCH
XF XT	MOLDED CASE CIRCUIT BREAKER XF FRAME RATING XT TRIP RATING
XF XF	LOW VOLTAGE DRAWOUT TYPE AIR CIRCUIT BREAKER (XF FRAME RATING XT-TRIP RATING)
XF XS	LOW VOLTAGE AIR CIRCUIT BREAKER (XF FRAME RATING XS SOLID STATE SENSOR RATING
E	LOW VOLTAGE DRAWOUT TYPE AIR CIRCUIT BREAKER WITH ONE NORMALLY OPEN AND ONE NORMALLY CLOSED AUXILARY CONTACT ELECTRICALLY OPERATED
	MEDIUM AND HIGH VOLTAGE CIRCUIT BREAKER DRAWOUT TYPE
	FULL WAVE RECTIFIER
	BATTERY
	CAPACITOR
	DIODE
	RESISTOR
	RESISTOR OR RHEOSTAT VARIABLE
M	RHEOSTAT-MOTOR OPERATED
Y	3 PHASE WYE (UNGROUNDED)
	3 PHASE WYE (GROUNDED)
	3 PHASE WYE (RESISTANCE GROUNDED)
Δ	3 PHASE DELTA (UNGROUNDED)
	3 PHASE DELTA (GROUNDED) 3 WIRE, 4 WIRE

SYMBOL	DESCRIPTION
	MECHANICAL CONNECTION
	MECHANICAL INTERLOCK
	PANEL OR OTHER DEVICE AS DESCRIBED
MS	MANUAL STARTER
30A	DISCONNECT SWITCH NOT FUSED (SIZE SHOWN, 3 POLE UNLESS OTHERWISE NOTED)
30A 15A	DISCONNECT SWITCH FUSED (SWITCH SIZE-TOP, FUSE SIZE-BOTTOM)
	WELDING RECEPTACLE
V VT	METER, TRANSDUCER X=A AMMETER, CURRENT ET-ELAPSED TIME, F-FREQUENCY, KW-KILOWATT METER, KWH-KILOWATT HOUR METER, KWHD-KILOWATT HOUR WITH DEMAND REGISTER, PF POWER FACTOR METER, POWER FACTOR, S-SYNCHROSCOPE, V VOLTMETER, VOLTAGE, VARMETER
X	SWITCH X=A AMMETER, CS-CIRCUIT BREAKER CONTROL SWITCH, F-FUEL SELECTOR SWITCH, GS-GOVERNOR RAISE LOWER SWITCH, S-SYNCHRONIZING SWITCH, V VOLTMETER
X	PROTECTIVE RELAY, REGULATING OR MONITORING DEVICE X=25-SYNCHRONIZATION CHECK RELAY, 27A AUTOMATIC SYNCHRONIZER, 30 ANNUNCIATOR, 32 REVERSE POWER RELAY, 59/81 UNDER FREQUENCY OVER VOLTAGE RELAY, 63 GOVERNOR VOLTAGE REGULATOR, 90 VAR/POWER FACTOR CONTROLLER
	EQUIPMENT
	CIRCUIT BREAKER TYPE COMBINATION MOTOR STARTER

SCHEMATICS

SYMBOL	DESCRIPTION
DISC SW	AUXILARY CONTACT OF DISCONNECT DEVICE IN STARTER, OPENS WHEN MAIN CONTACTS OPEN
OL(3)	CONTACT OF 3 POLE OVERLOAD RELAY
GS A X	AUXILARY CONTACT OF FIELD SAFETY SWITCH EARLY BREAK UPON OPENING OF MAIN CONTACTS
	NORMALLY OPEN CONTACT
	NORMALLY CLOSED CONTACT
	FUSE
	PILOT LIGHT LETTER INDICATES COLOR
	MS=MOTOR STARTER; MF=STARTER, FORWARD; MSB=STARTER, BACK; S=STARTING CONTACTOR; 1M=Δ-Y ; 2M=Δ ; C= CONTACTOR
STOP	LOCKOUT STOP BUTTON
	TOGGLE KNIFE OR SAFETY DISCONNECT SWITCH
	TRANSFER OR 3 WAY SWITCH
OFF HAND AUTO	THREE POSITION SELECTOR CONTACTS CLOSED IN POSITION INDICATED BY LETTER
	NO PUSHBUTTON SWITCH SPRING OPEN
	NC PUSHBUTTON SWITCH SPRING CLOSED
	OPEN LIMIT SWITCH
	CLOSED LIMIT SWITCH
	NO PRESSURE OR VACUUM OPERATED SWITCH, CLOSES ON INCREASING PRESSURE
	NC PRESSURE OR VACUUM OPERATED SWITCH, OPENS ON INCREASING PRESSURE
	NO LEVEL ACTUATED SWITCH, CLOSES ON RISING LEVEL
	NC LEVEL ACTUATED SWITCH, OPENS ON RISING LEVEL
	NO TEMPERATURE SWITCH, CLOSES ON RISING TEMPERATURE
	NC TEMPERATURE SWITCH, OPENS ON RISING TEMPERATURE
	NO CONTACT, CLOSES IN TIME DELAY AFTER COIL ENERGIZES, REOPENS INSTANTANEOUSLY WHEN COIL DE-ENERGIZES
	NC CONTACT, OPENS IN TIME DELAY AFTER COIL ENERGIZES, RECLOSES INSTANTANEOUSLY WHEN COIL DE-ENERGIZES
	NO CONTACT, CLOSES INSTANTANEOUSLY WHEN COIL ENERGIZES, REOPENS ON TIME DELAY AFTER COIL DE ENERGIZES
	NC CONTACT, OPENS INSTANTANEOUSLY WHEN COIL ENERGIZES, RECLOSES IN TIME DELAY AFTER COIL DE-ENERGIZES
	TORQUE SWITCH OPENS ON RISING TORQUE
	POTENTIOMETER
	MANUAL STARTER
	ELECTRICAL NOTE
	REFERENCE TO SPECIFICATION SECTION

SYMBOL	DESCRIPTION
SV	SOLENOID VALVE
	CABLE SHIELD
	SINGLE PHASE MOTOR
R	OPERATING COIL, RELAY, MOTOR STARTER, DEPENDING ON LETTERS
TR	TIMER RELAY
	HORN OR SIREN
	GROUND CONNECTION

ABBREVIATIONS

SYMBOL	DESCRIPTION
PPMH	PRIMARY POWER MANHOLE
CCMH	CONTROL & COMMUNICATION MANHOLE
AFD	ADJUSTABLE FREQUENCY DRIVE
MCC	MOTOR CONTROL CENTER
SPM	SECONDARY POWER MANHOLE
RMC	RIGID METALLIC CONDUIT
PCU	PROCESS CONTROL UNIT
AFF	ABOVE FINISHED FLOOR
HS	HAND SWITCH
CCP	CENTRIFUGE CONTROL PANEL
ICP	INTEGRATED CONTROL PANEL
PVC	POLYVINYL CHLORIDE COATED
PFP	POLYMER FEED PUMP
JB	JUNCTION BOX
EF	EXHAUST FAN
FVNR	FULL VOLTAGE NON-REVERSING
LTG	LIGHTING
LSL	LEVEL SWITCH LOW
CSP	CENTRATE SAMPLE PUMP
SFP	SLUDGE FEED PUMP
TB	TERMINAL BOARD
CPT	CONTROL POWER TRANSFORMER
NP	NAMEPLATE

GENERAL NOTES

1. MINIMUM WIRE SIZE FOR 480V CIRCUITS: #10
2. FOR ELECTRICAL AND INSTRUMENTATION MANHOLES AND DUCTBANKS REFER TO DRAWING G-05 AND G-06.

RECORD DRAWING

DATE:	DRAFTED BY:
AUG. 1988	MCA

THESE RECORD DRAWINGS HAVE BEEN PREPARED, IN PART, ON THE BASIS OF INFORMATION COMPILED AND FURNISHED BY OTHERS. THE ENGINEER WILL NOT BE RESPONSIBLE FOR ANY ERRORS OR OMISSIONS WHICH HAVE BEEN INCORPORATED INTO THIS DOCUMENT AS A RESULT.

STEVEN E. SORENSEN NEW MEXICO 6570 REGISTERED PROFESSIONAL ENGINEER 5-85

26 3694928 8

NO.	DATE	REVISIONS	APPROVED

DESIGNED SS
DRAWN STAFF
CHECKED
APPROVED
APPROVED
DATE 5-85

MOLZEN-CORBIN
STANLEY CONSULTANTS
A JOINT VENTURE

NONE
GRAPHIC SCALE

CITY OF ALBUQUERQUE, NEW MEXICO
SOLIDS HANDLING FACILITIES
PHASE II B-3, CONTRACT 1

INTERIM SLUDGE DEWATERING FACILITIES
ELECTRICAL LEGEND

M-C NO. 832221
E-01
92 OF 112
SC NO.

NOTES

1. 16500-4
2. 16500-2
3. 16500-5 MOUNT AS HIGH AS PRACTICAL BETWEEN TEES.
4. 16500-7 MOUNT 9' ± AFF.
5. 16500-7 MOUNT SO TOP OF HEADS ARE 9" ± BELOW CEILING.
6. 16500-6 MOUNT 12" ± ABOVE DOOR.
7. THERMOSTAT PROVIDED UNDER DIVISION 15. INSTALLATION AND CONNECTION PROVIDED UNDER DIVISION 16. 1/2" EMT; CONTROLS AS REQUIRED BY MANUFACTURER'S INSTRUCTIONS.
8. LIGHTING CONTROL SWITCH. SEE SCHEMATICS.
9. SUSPEND UNDER DUCT WITH UNISTRUT SUPPORTED FROM CEILING WITH THREADED ROD.
10. NEMA 12 LIGHTING CONTACTOR ENCLOSURE. SHOWN THUS FOR DRAFTING CONVENIENCE. MOUNT ON WALL ABOVE LPI. CONTAINS MAINTENANCE AND EXTERIOR LIGHTING CONTACTORS.
11. 16500-6 MOUNT 8' ± AFF.
12. MOUNT HIGH ON THE WALL TO THE SIDE OF THE STAIRS.

GENERAL NOTES

1. INSTALL NEC 500 GAS SEALS ON ALL CONDUITS PENETRATING THE ENVELOPE OF THE CONVEYOR ROOM AND/OR BIN AREA. FILL WITH NON-HARDENING SEALER.

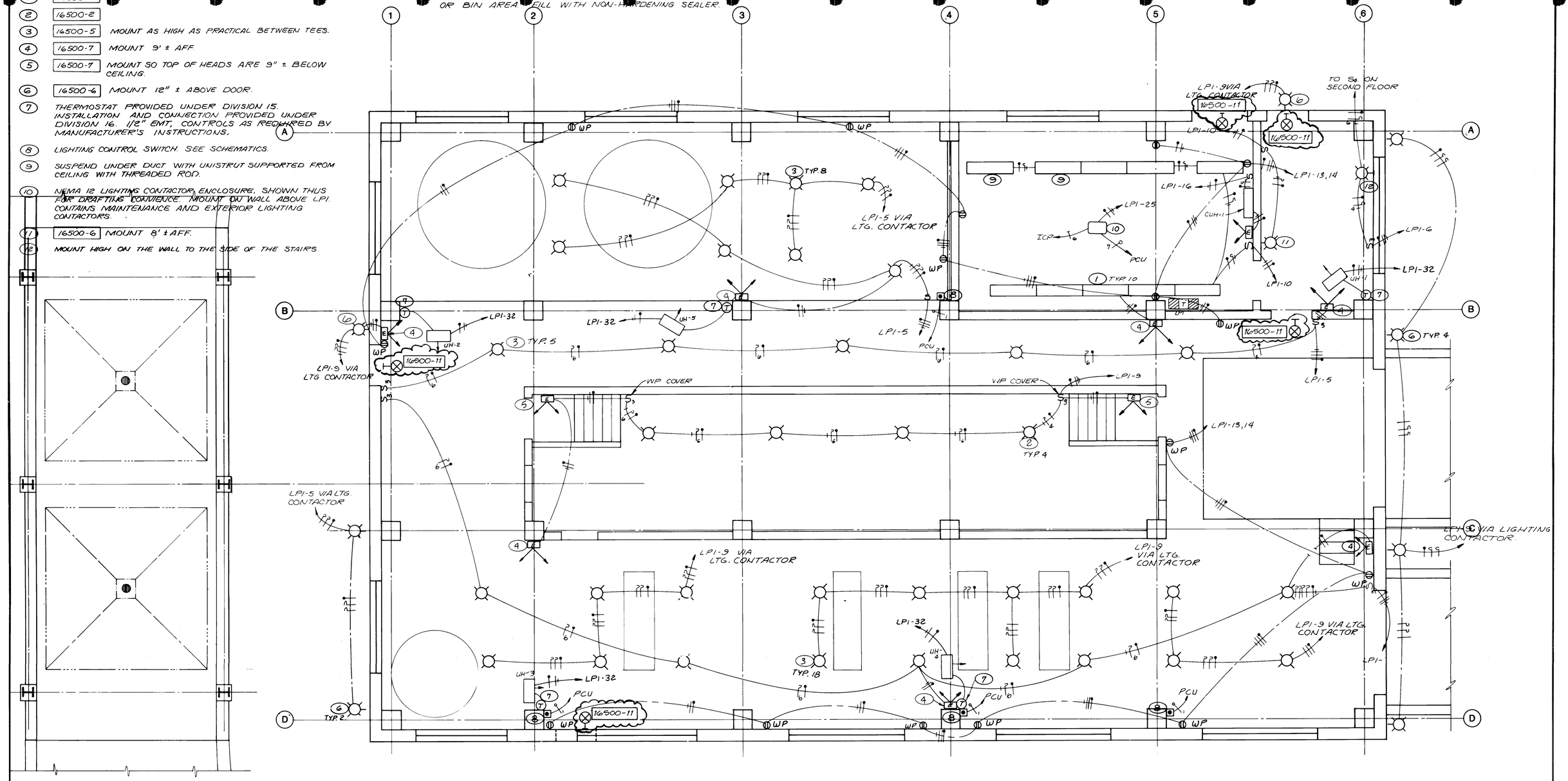

RECORD DRAWING

DATE:	DRAFTED BY:
AUG. 1988	MCA

THESE RECORD DRAWINGS HAVE BEEN PREPARED, IN PART, ON THE BASIS OF INFORMATION COMPILED AND FURNISHED BY OTHERS. THE ENGINEER WILL NOT BE RESPONSIBLE FOR ANY ERRORS OR OMISSIONS WHICH HAVE BEEN INCORPORATED INTO THIS DOCUMENT AS A RESULT.

STEVEN E. SORENSON NEW MEXICO 6570 REGISTERED PROFESSIONAL ENGINEER 5-85

1 2 3 4 5 6 7 8 9 10 11 12 13 14 15 16 17 18 19 20 21 22 23 24 25 26 27 28 29
2 6 3 6 9 4 9 3 8 8

NO.	DATE	REVISIONS	APPROVED

DESIGNED SS
DRAWN STAFF
CHECKED
APPROVED
APPROVED
DATE 5-85

MOLZEN-CORBIN
STANLEY CONSULTANTS
A JOINT VENTURE

1/4" 1'-0" 0 4 6 8
GRAPHIC SCALE

CITY OF ALBUQUERQUE, NEW MEXICO
SOLIDS HANDLING FACILITIES
PHASE II B-3, CONTRACT 1

INTERIM SLUDGE DEWATERING FACILITIES
LIGHTING - GROUND FLOOR PLAN

M-C NO. 832221
E-02
93 OF 112
SC NO.

NOTES

1. 16500-1
2. 16500-2
3. 16500-5
4. 16500-3
5. 16500-7 MOUNT 10' ± AFF.
6. 16500-7 MOUNT 8' ± ABOVE LANDING.
7. MOUNT TWO 16500-8 EVENLY SPACED IN STAIRS. CONNECT TO SAME CIRCUIT AS OTHER FLUORESCENT LUMINAIRES. MOUNT WITH LONG DIMENSION PARALLEL TO CONVEYOR.
8. THERMOSTAT PROVIDED UNDER DIVISION 15. INSTALLATION AND CONNECTION: DIVISION 16. 1/2" EMT, CONTROLS AS REQUIRED BY MANUFACTURER'S INSTRUCTIONS.
9. 16500-8
10. LIGHTING CONTROL SWITCH. SEE SCHEMATICS.
11. 16500-6 MOUNT 8' ± ABOVE LANDING.
12. MOUNT HIGH ON THE WALL TO THE SIDE OF THE STAIRS.
13. 16500-9 MOUNT ON TOP OF PARAPET.

GENERAL NOTES

1. INSTALL "NEC 500 GAS SEALS" ON ALL CONDUITS PENETRATING THE ENVELOPE OF THE CONVEYOR ROOM AND/OR BIN AREA. FILL WITH NON-HARDENING SEALER.

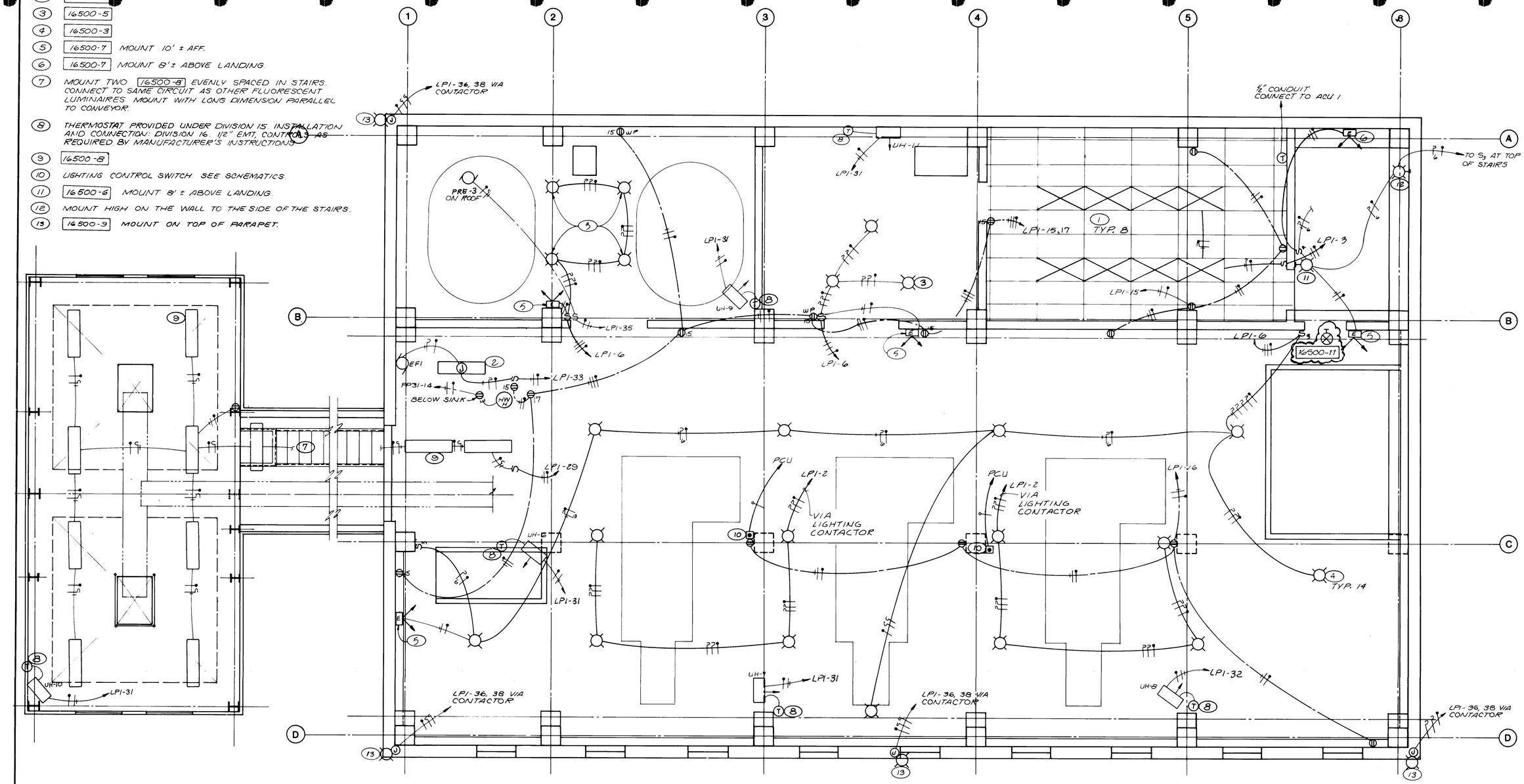

RECORD DRAWING

DATE:	DRAFTED BY:
AUG. 1988	MCA

THESE RECORD DRAWINGS HAVE BEEN PREPARED, IN PART, ON THE BASIS OF INFORMATION COMPILED AND FURNISHED BY OTHERS. THE ENGINEER WILL NOT BE RESPONSIBLE FOR ANY ERRORS OR OMISSIONS WHICH HAVE BEEN INCORPORATED INTO THIS DOCUMENT AS A RESULT.

STEVEN E. SORENSON NEW MEXICO (6570) REGISTERED PROFESSIONAL ENGINEER 7-85

1 2 3 4 5 6 7 8 9 10 11 12 13 14 15 16 17 18 19 20 21 22 23 24 25 26 27 28 29
26 3 6 9 4 4 4 8 8

NO.	DATE	REVISIONS	APPROVED

DESIGNED SS
DRAWN STAFF
CHECKED
APPROVED
APPROVED
DATE 5-85

MOLZEN-CORBIN
STANLEY CONSULTANTS
A JOINT VENTURE

1/4" 1'-0" GRAPHIC SCALE 0 4 8 16

CITY OF ALBUQUERQUE, NEW MEXICO
SOLIDS HANDLING FACILITIES
PHASE II B-3, CONTRACT 1

INTERIM SLUDGE DEWATERING FACILITIES
LIGHTING - SECOND FLOOR PLAN

M-C NO. 832221
E-03
SC NO.
94 OF 112

82624

NOTES

1. 1/2" EMT TO THERMOSTAT ON CONTROL ROOM WALL, SECOND FLOOR. CONTROLS AS REQUIRED BY MANUFACTURER'S INSTRUCTIONS.
2. 1/2" EMT TO DIFFERENTIAL PRESSURE TRANSMITTER ON MCC ROOM WALL. CONTROLS AS REQUIRED BY MANUFACTURER'S INSTRUCTIONS.
3. THERMOSTAT PROVIDED UNDER DIVISION 15. INSTALLATION AND CONNECTION UNDER DIVISION 16.
4. 1/2" EMT TO THERMOSTAT ON MCC ROOM WALL. CONTROLS AS REQUIRED BY MANUFACTURER'S INSTRUCTIONS.
5. 16500-4
6. △ 16500-7 7'-0" AFF.

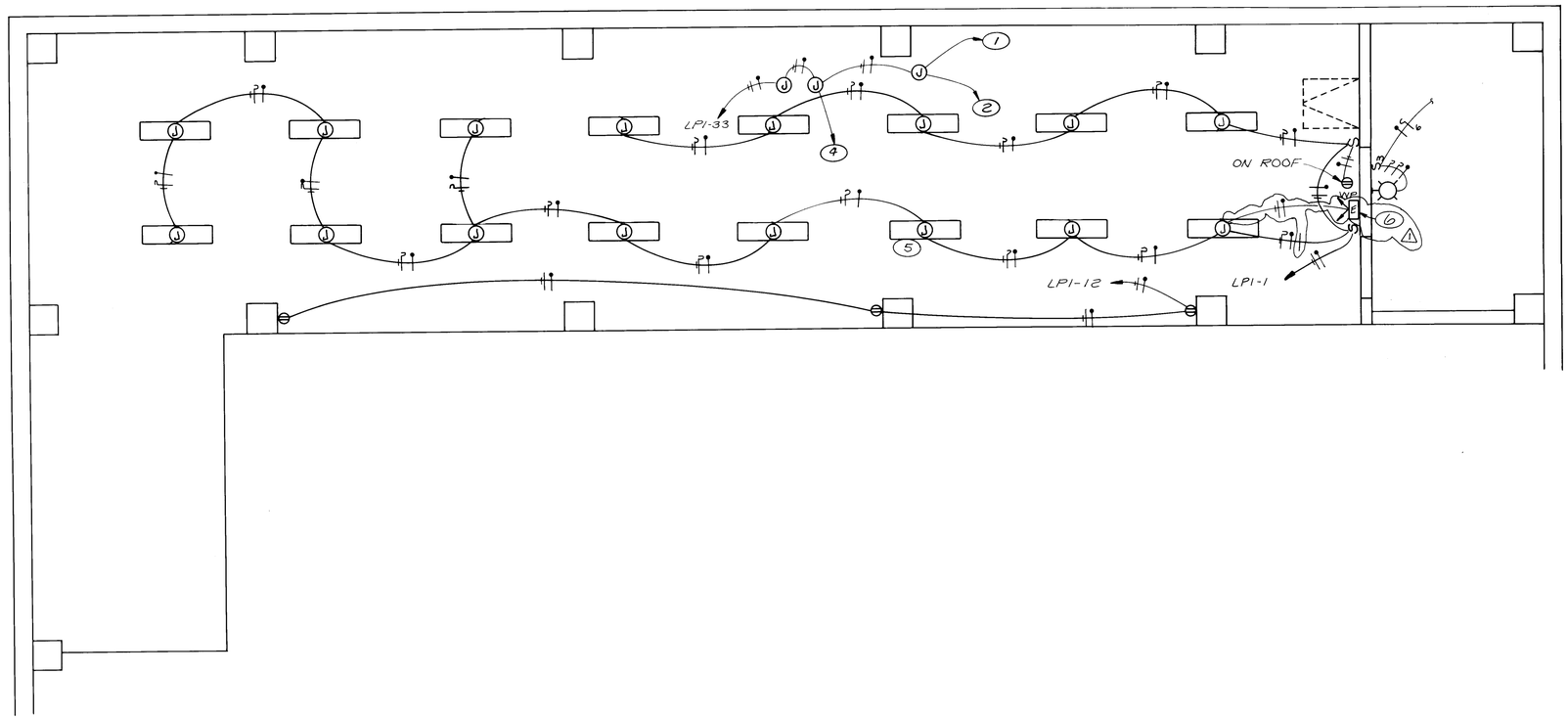

RECORD DRAWING

DATE:	DRAFTED BY:
AUG. 1988	MCA

THESE RECORD DRAWINGS HAVE BEEN PREPARED, IN PART, ON THE BASIS OF INFORMATION COMPILED AND FURNISHED BY OTHERS. THE ENGINEER WILL NOT BE RESPONSIBLE FOR ANY ERRORS OR OMISSIONS WHICH HAVE BEEN INCORPORATED INTO THIS DOCUMENT AS A RESULT.

STEVEN E. SORENSON NEW MEXICO 6570 REGISTERED PROFESSIONAL ENGINEER

26 3 6 9 4 9 5 8 8

NO.	DATE	REVISIONS	APPROVED
△	7-23-85	EMERGENCY LIGHT, NOTE 6	

DESIGNED SS
DRAWN STAFF
CHECKED
APPROVED
APPROVED
DATE 5-85

MOLZEN-CORBIN
STANLEY CONSULTANTS
A JOINT VENTURE

1/4" 1'-0" 0 4 6 8
GRAPHIC SCALE

CITY OF ALBUQUERQUE, NEW MEXICO
SOLIDS HANDLING FACILITIES
PHASE II B-3, CONTRACT 1

INTERIM SLUDGE DEWATERING FACILITIES
LIGHTING - MEZZANINE

M-C NO. 832221
E-04
95 OF 112
SC NO.

GENERAL NOTES

1. INSTALL NEC 500 GAS SEALS ON ALL CONDUITS PENETRATING THE ENVELOPE OF THE CONVEYOR ROOM AND/OR [illegible] AREA. FILL WITH NON-HARDENING SEALER.
2. ELLIPTICAL NOTES FOR THIS SHEET ARE ON SHEET E-07.

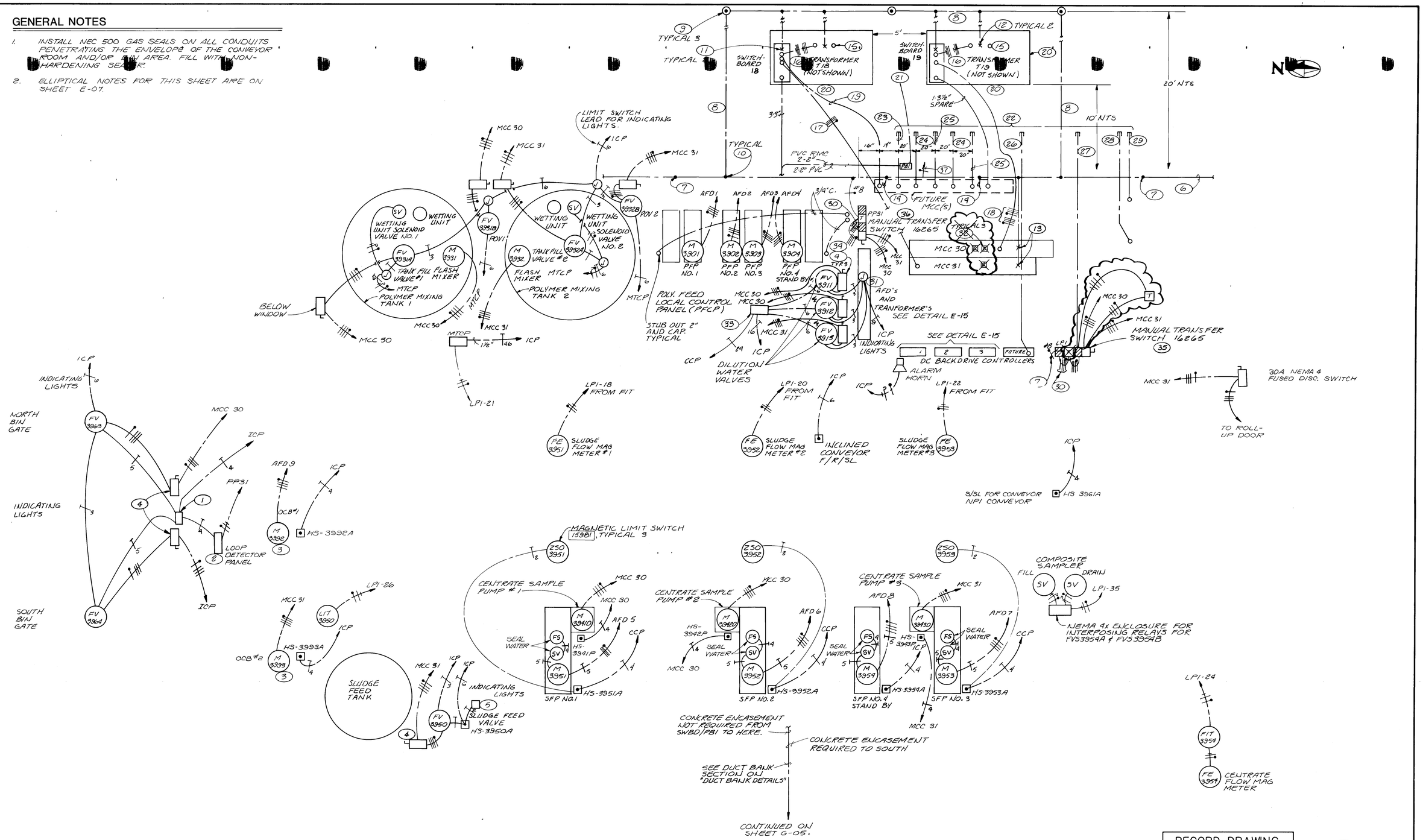

RECORD DRAWING

DATE: AUG. 1988 | DRAFTED BY: MCA

THESE RECORD DRAWINGS HAVE BEEN PREPARED, IN PART, ON THE BASIS OF INFORMATION COMPILED AND FURNISHED BY OTHERS. THE ENGINEER WILL NOT BE RESPONSIBLE FOR ANY ERRORS OR OMISSIONS WHICH HAVE BEEN INCORPORATED INTO THIS DOCUMENT AS A RESULT.

STEVEN E. SORENSON NEW MEXICO 6570 REGISTERED PROFESSIONAL ENGINEER 5-85

1 2 3 4 5 6 7 8 9 10 11 12 13 14 15 16 17 18 19 20 21 22 23 24 25 26 27 28 29

2 6 3 6 9 4 9 6 8 8

NO.	DATE	REVISIONS	APPROVED

DESIGNED SS
DRAWN STAFF
CHECKED
APPROVED
APPROVED
DATE 5-85

MOLZEN-CORBIN
STANLEY CONSULTANTS
A JOINT VENTURE

1/4" 1'-0" — GRAPHIC SCALE 0 4 6 8

CITY OF ALBUQUERQUE, NEW MEXICO
SOLIDS HANDLING FACILITIES
PHASE II B-3, CONTRACT 1

INTERIM SLUDGE DEWATERING FACILITIES
POWER & CONTROL - GROUND FLOOR PLAN

M-C NO. 832221
E-05
96 OF 112
SC NO.

NOTES

1. 1/G265 30A 480V NP: FED FROM MCC 30; NP: FED FROM MCC 31; NP: FEEDS ISOLATION TRANSFORMER.
2. 1/G265 30A 120V NP: FED FROM UPS; NP: FED FROM ISOLATION TRANSFORMER; NP: FEEDS PCU.
3. SHIELDED ISOLATION TRANSFORMER. 480/120 V, 1Ø, 5KVA, TRANSVERSE NOISE REJECTION=60db COMMON MODE NOISE REJECTION=120db. N/O. ISOLATION TRANSFORMER, FED FROM ADJACENT MANUAL TRANSFER SWITCH. FEEDS UPS AND MANUAL TRANSFER SWITCH. MOUNT BELOW MANUAL TRANSFER SWITCH.
4. SEE PCU GROUNDING DETAIL, DWG E-15
5. CONNECT TO PUMP STARTER AUXILIARY SO BOILER RUNS IN AUTO ONLY WHEN A PUMP IS RUNNING.
6. NOT USED
7. 3/4" FOR LAMP LEADS AND OTHER DC
8. FOR OTHER CONDUITS AND WIREWAYS INTERCONNECTING PCU, ICP1 & ICP2, & CCP'S, SEE SHEETS I-14 & I-15.
9. FOR PANEL DETAIL, SEE SHEET I-17, TYPICAL 3
10. FOR PANEL DETAIL, SEE SHEET I-18
11. FOR PANEL DETAIL, SEE SHEET I-19
12. 6#4/0 AND 1#2 GROUND IN 3"C.
13. MOUNT ON THE WALL ABOVE THE CONTROL STATION.

GENERAL NOTES

1. INSTALL NEC 500 GAS SEALS ON ALL CONDUITS PENETRATING ENVELOPE OF CONVEYOR ROOM AND/OR BIN AREA. FILL WITH NON-HARDENING SEALER.

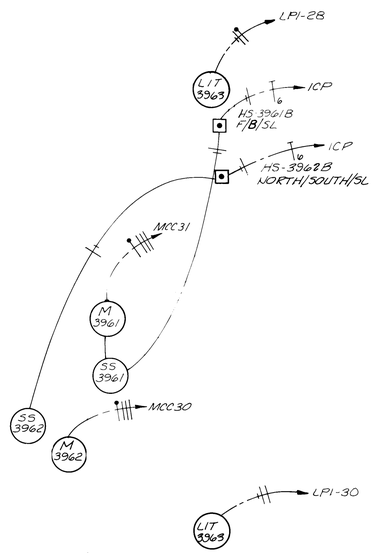

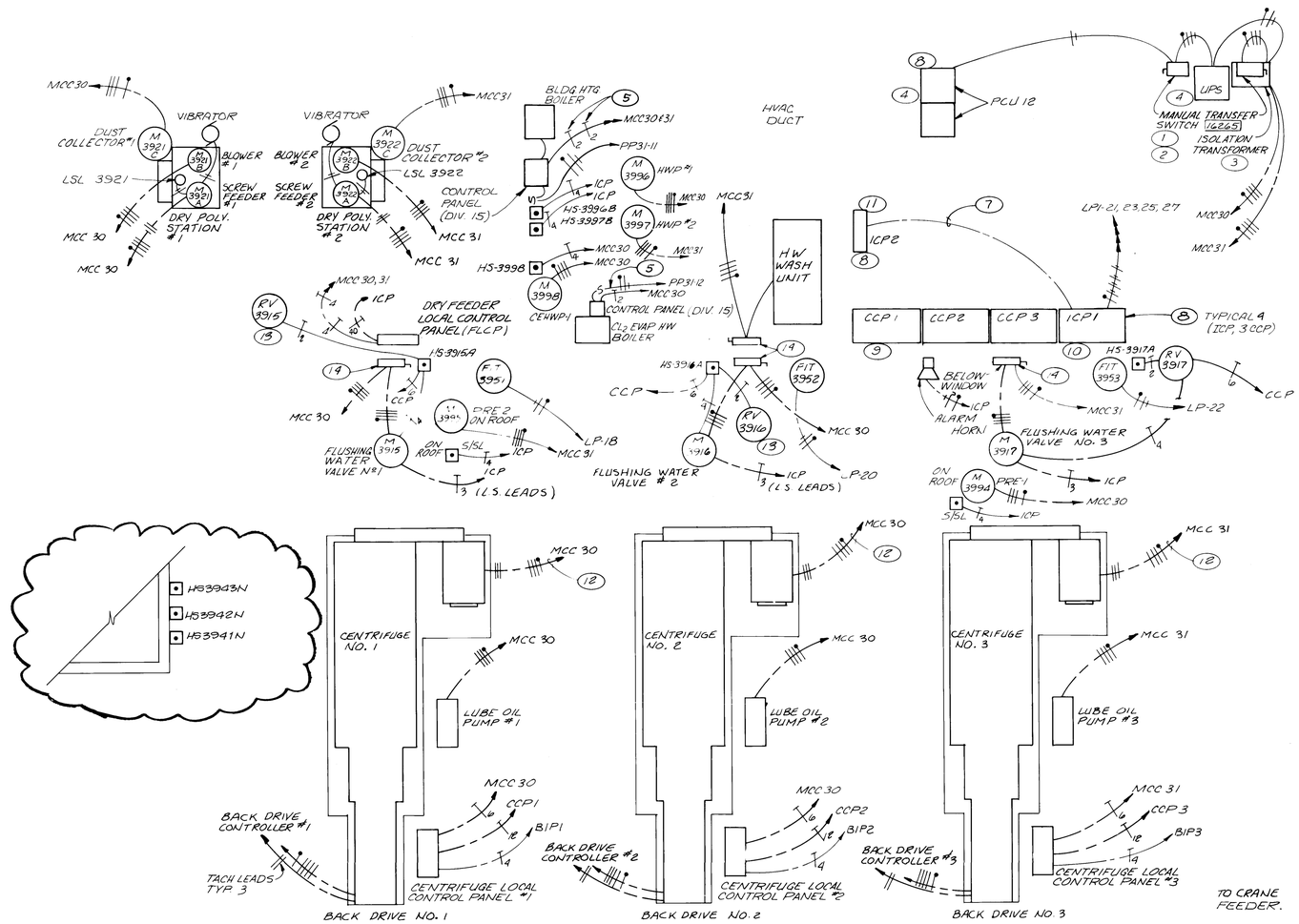

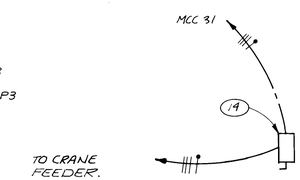

NOTES CONT.

14. 30A FUSED DISCONNECT SWITCH 480V. NEMA 4 S.S. PROVIDE NP TO IDENTIFY EQUIPMENT SERVED.

RECORD DRAWING

DATE:	DRAFTED BY:
AUG. 1988	MCA

THESE RECORD DRAWINGS HAVE BEEN PREPARED, IN PART, ON THE BASIS OF INFORMATION COMPILED AND FURNISHED BY OTHERS. THE ENGINEER WILL NOT BE RESPONSIBLE FOR ANY ERRORS OR OMISSIONS WHICH HAVE BEEN INCORPORATED INTO THIS DOCUMENT AS A RESULT.

STEVEN E. SORENSON NEW MEXICO 8570 REGISTERED PROFESSIONAL ENGINEER 4-85

1 2 3 4 5 6 7 8 9 10 11 12 13 14 15 16 17 18 19 20 21 22 23 24 25 26 27 28 29
26 3 6 9 4 9 7 8 8

NO.	DATE	REVISIONS	APPROVED

DESIGNED SS
DRAWN STAFF
CHECKED
APPROVED
APPROVED
DATE 5-85

MOLZEN-CORBIN
STANLEY CONSULTANTS
A JOINT VENTURE

1/4" 1'-0"
0 4 6 8
GRAPHIC SCALE

CITY OF ALBUQUERQUE, NEW MEXICO
SOLIDS HANDLING FACILITIES
PHASE II B-3, CONTRACT 1

INTERIM SLUDGE DEWATERING FACILITIES
POWER & CONTROL - SECOND FLOOR PLAN

M-C NO. 832221
E-06
97 OF 112
SC NO.

NOTES

1. 1/6265 30A 480V NP: FED FROM MCC 30; NP: FED FROM MCC 31; NP: FEEDS ISOLATION TRANSFORMER.
2. 1/6265 60A 120V NP: FED FROM UPS; NP: FED FROM ISOLATION TRANSFORMER; NP: FEEDS PCU.
3. SHIELDED ISOLATION TRANSFORMER. 480/120 V, 1Ø, 5KVA. TRANSVERSE NOISE REJECTION=60db COMMON MODE NOISE REJECTION=120db. NP: ISOLATION TRANSFORMER FED FROM ADJACENT MANUAL TRANSFER SWITCH. FEEDS UPS AND MANUAL TRANSFER SWITCH. MOUNT BELOW MANUAL TRANSFER SWITCH.
4. SEE PCU GROUNDING DETAIL, DWG E-15
5. CONNECT TO PUMP STARTER AUXILIARY SO BOILER RUNS IN AUTO ONLY WHEN A PUMP IS RUNNING.
6. NOT USED
7. 3/4" FOR LAMP LEADS AND OTHER DC.
8. FOR OTHER CONDUITS AND WIREWAYS INTERCONNECTING PCU, ICP1 & ICP2, & CCP'S. SEE SHEETS I-14 & I-15.
9. FOR PANEL DETAIL, SEE SHEET I-17, TYPICAL 3
10. FOR PANEL DETAIL, SEE SHEET I-18
11. FOR PANEL DETAIL, SEE SHEET I-19
12. 6#4/0 AND 1#2 GROUND IN 3" C.
13. MOUNT ON THE WALL ABOVE THE CONTROL STATION.

GENERAL NOTES

1. INSTALL NEC 500 GAS SEALS ON ALL CONDUITS PENETRATING ENVELOPE OF CONVEYOR ROOM AND/OR BIN AREA. FILL WITH NON-HARDENING SEALER.

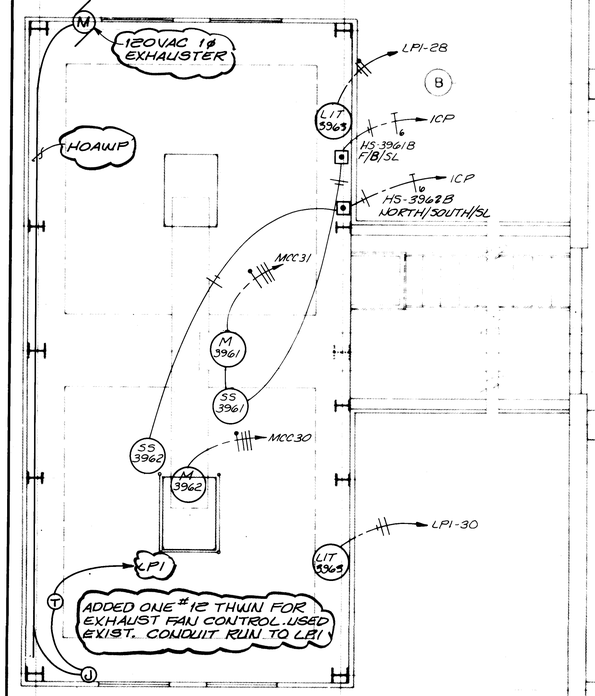

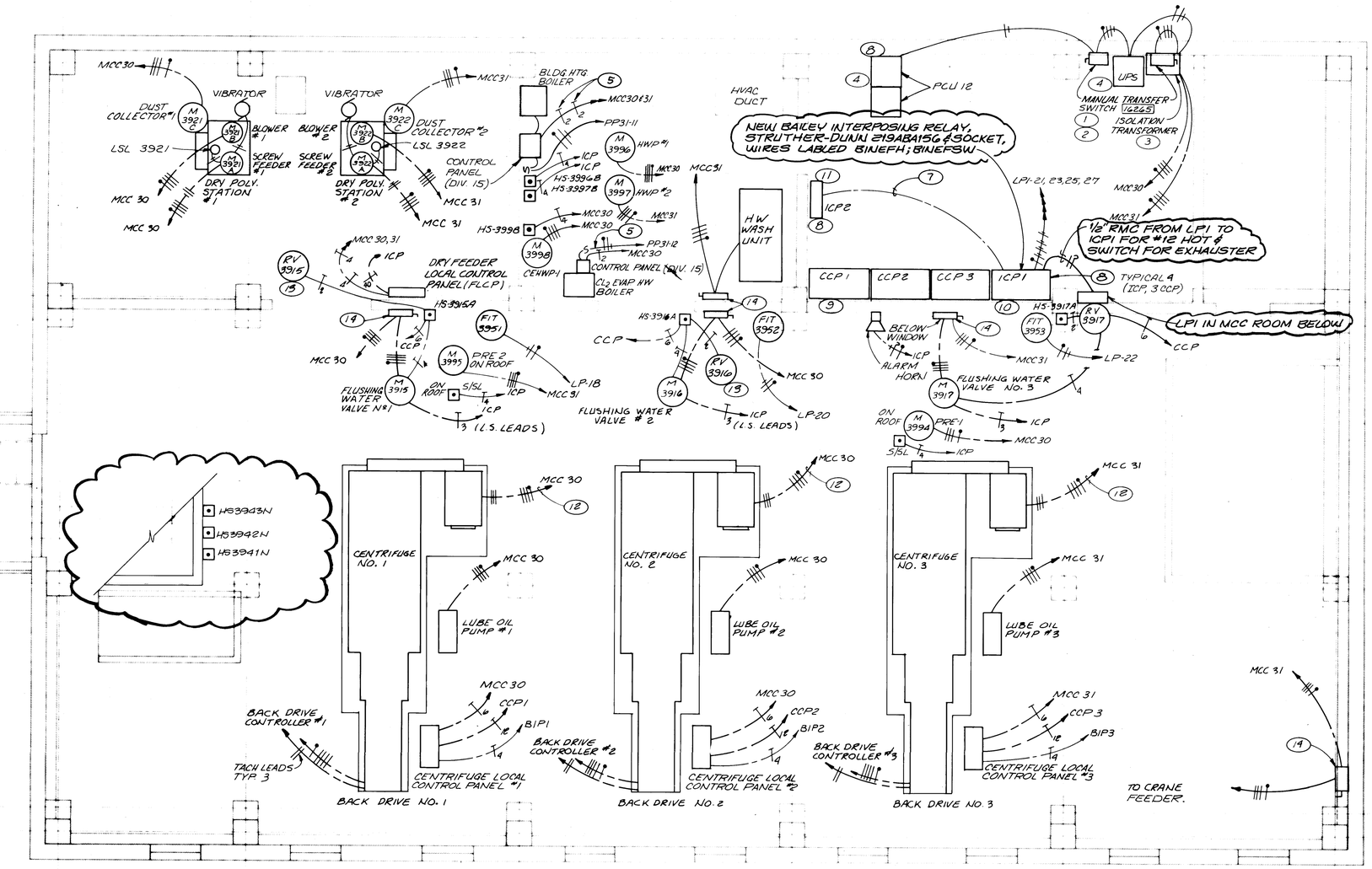

NOTES CONT.

14. 30A FUSED DISCONNECT SWITCH 480V. NEMA 4 S.S. PROVIDE UP TO IDENTIFY EQUIPMENT SERVED.

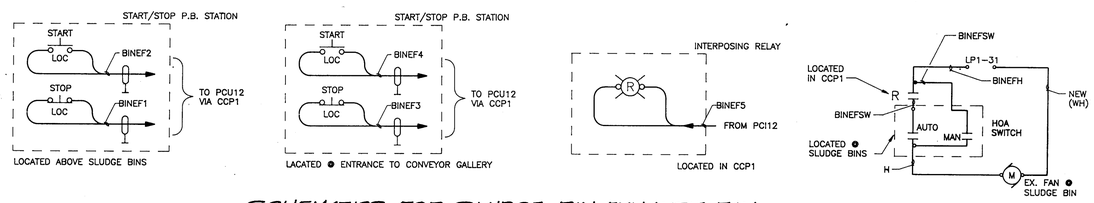

SCHEMATICS FOR SLUDGE BIN EXHAUST FAN

RECORD DRAWING

DATE: AUG. 1988	DRAFTED BY: MCA

THESE RECORD DRAWINGS HAVE BEEN PREPARED, IN PART, ON THE BASIS OF INFORMATION COMPILED AND FURNISHED BY OTHERS. THE ENGINEER WILL NOT BE RESPONSIBLE FOR ANY ERRORS OR OMISSIONS WHICH HAVE BEEN INCORPORATED INTO THIS DOCUMENT AS A RESULT.

STEVEN E. SORENSON, NEW MEXICO, 8570, REGISTERED PROFESSIONAL ENGINEER

NO.	DATE	REVISIONS	APPROVED
1	11/17/89	REVISED RECORD DRAWING	

DESIGNED SS
DRAWN STAFF
CHECKED
APPROVED
APPROVED
DATE 5-85

MOLZEN-CORBIN
STANLEY CONSULTANTS
A JOINT VENTURE

1/4" 1'-0" GRAPHIC SCALE

CITY OF ALBUQUERQUE, NEW MEXICO
SOLIDS HANDLING FACILITIES
PHASE II B-3, CONTRACT 1

INTERIM SLUDGE DEWATERING FACILITIES
POWER & CONTROL - SECOND FLOOR PLAN

M-C NO. 832221
E-06
97 of 112
SC NO.

826 24

NOTES FOR GROUND FLOOR PLAN POWER & CONTROL SHEET E-05

1. MOUNT ON COLUMN 60" ABOVE PLATFORM. FOR PANEL DETAIL, SEE SHEET E-15.
2. MOUNT ON RAIL TO EAST SIDE OF THE PLATFORM.
3. FOR LOCATION, SEE MECHANICAL SHEET H-07.
4. 30A, 480V FUSED DISCONNECT SWITCH, NEMA 4 S.S. PROVIDE NP TO IDENTIFY EQUIPMENT SERVED.
5. INTERPOSING RELAY. SEE SCHEMATIC. MOUNT ABOVE CONTROL STATION.
6. 2/0 BARE COPPER IN FOOTING.
7. BRAZE COPPER TO REINFORCING ROD.
8. 2/0 BARE COPPER AT 30" NOMINAL DEPTH.
9. 5/8" x 10' RODS DRIVEN SO TOP IS 30" BELOW GRADE.
10. ALL COPPER-COPPER AND COPPER-GROUND ROD CONNECTIONS IN CONCRETE OR IN EARTH SHALL BE MADE BY HDEWP.
11. 2/0 BARE COPPER TO SWITCHBOARD GROUND BUS.BOND NEUTRAL TO GROUND.
12. 2/0 BARE COPPER TO TRANSFORMER GROUND PAD. BOND NEUTRAL TO GROUND.
13. 2/0 BARE COPPER TO MCC BUS.
14. STUB UP 18" FOR FUTURE MCC GROUND.
15. 3 #2 15KV, 1 #2 GND., 5" CONDUIT TO FIFTH AVE. SWITCHING STATION. SEE G-05.
16. 2-500 MCM PER PHASE AND 2-2/0 NEUTRAL, 2-3 1/2" CONDUITS.
17. 1-500 MCM PER PHASE AND 1-2/0 GND., 1-3 1/2" CONDUIT AND 1-3 1/2" CONDUIT SPARE.
18. 2-500 MCM PER PHASE AND 2-2/0 GROUND, 2-3 1/2' CONDUITS
19. 2-3 1/2" CONDUIT SPARE.
20. FOR TRANSFORMER PAD, SEE SHEET E-20.
21. INSTRUMENTATON CONDUITS WITH DATA HIGHWAY CONDUITS. EXTEND TO CCMH11. SEE SHEET G-05. SEE "DATA HIGHWAY PLANT COMMUNICATION LOOP" DETAIL.
22. EXTEND 1' NORTH OF SIDEWALK AT 24" DEPTH AND CAP. CAP 2" ABOVE FLOOR IN MCC ROOM. USE RNMC WITH RNMC ELBOWS EXCEPT AS NOTED.
23. 2-2 1/2" WITH PVC RMC ELBOWS, 2-1".
24. 6-1", 6-3/4".
25. 4-1 1/2" WITH PVC ELBOWS, 6-3/4".
26. 1-1 1/2" WITH PVC ELBOWS, 1-3/4".
27. 3-1/2", 6-3/4".
28. 6-3/4".
29. 4-3/4".
30. 1 #6 NEUTRAL, 3 #6 PHASE, 1 #8 GND.
31. MOUNT ON WALL ADJACENT TO VALVES.
32. ~~30 KVAR 480V~~ POWER FACTOR CORRECTION ~~CAPACITOR.~~ SUSPEND FROM SLAB ABOVE, ~~OVER MCC. CONNECT~~ TO RESPECTIVE CENTRIFUGE ~~STARTER~~ IN ACCORDANCE WITH NEC.
33. SUPPORT WITH 4" ALUMINUM "C" CHANNEL ON EACH SIDE FROM FLOOR. STABILIZE TO PLATFORM. NO PROTRUSIONS ON NORTH SIDE.
34. MOUNT ALL SWITCHES NEAR COLUMN B-4. NP ON EACH.
35. 16265 30A 480V, NP: FED FROM MCC 30; NP: FED FROM MCC 31; NP: FEED XFMR & LP1.
36. 16265 SAME AS (35) EXCEPT NP: FEED XFMR & PP31
37. #2 UP TO PCU GROUND.

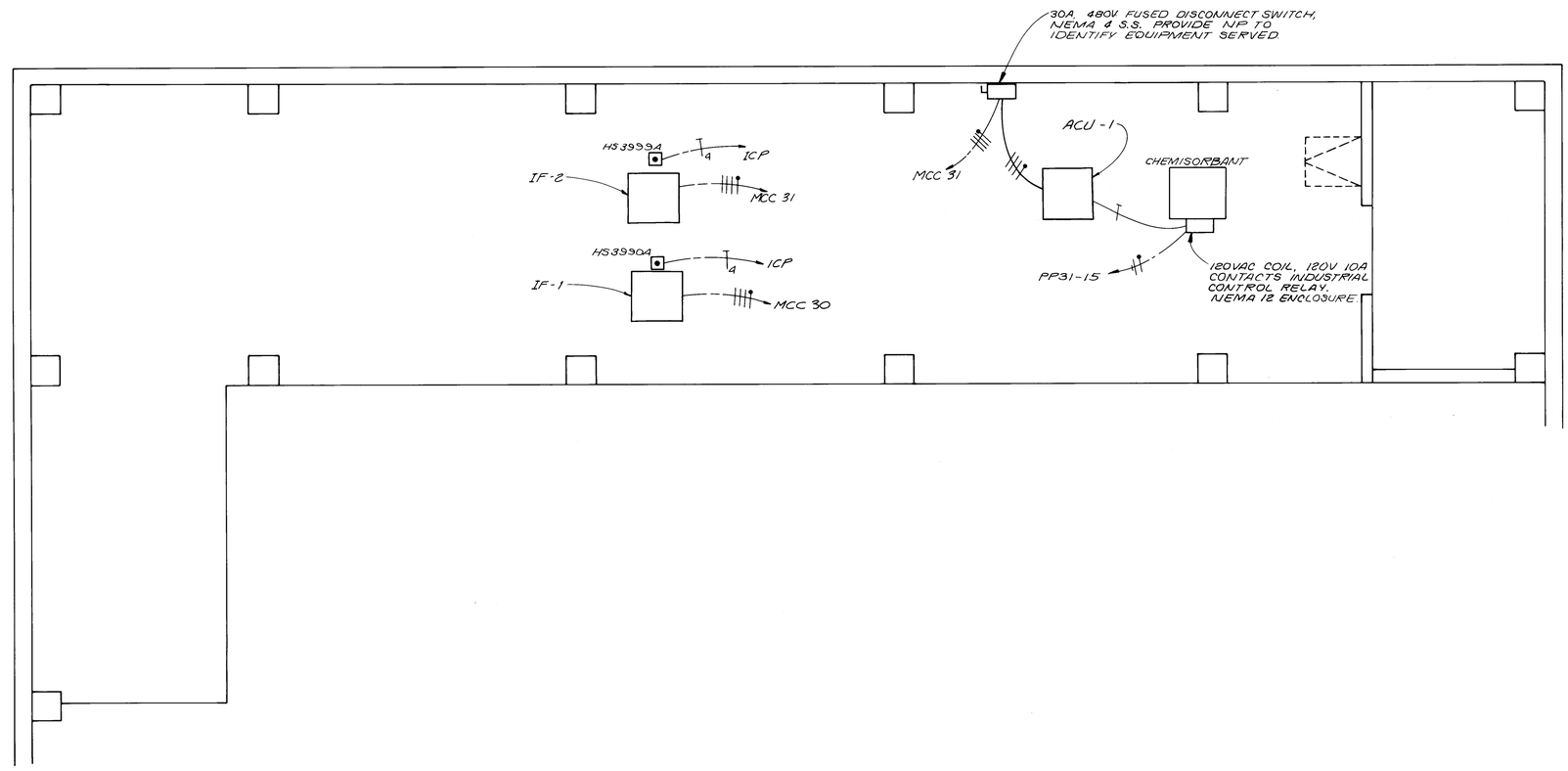

RECORD DRAWING

DATE: AUG. 1988 | DRAFTED BY: MCA

THESE RECORD DRAWINGS HAVE BEEN PREPARED, IN PART, ON THE BASIS OF INFORMATION COMPILED AND FURNISHED BY OTHERS. THE ENGINEER WILL NOT BE RESPONSIBLE FOR ANY ERRORS OR OMISSIONS WHICH HAVE BEEN INCORPORATED INTO THIS DOCUMENT AS A RESULT.

STEVEN E. SORENSON NEW MEXICO 6570 REGISTERED PROFESSIONAL ENGINEER

26 3694988

NO.	DATE	REVISIONS	APPROVED
1	7-23-85	NOTE 15 & NOTE 1	

DESIGNED SS
DRAWN STAFF
CHECKED
APPROVED
APPROVED
DATE 5-85

MOLZEN-CORBIN
STANLEY CONSULTANTS
A JOINT VENTURE

1/4" 1'-0" 0 4 6 8 GRAPHIC SCALE

CITY OF ALBUQUERQUE, NEW MEXICO
SOLIDS HANDLING FACILITIES
PHASE II B-3, CONTRACT 1

INTERIM SLUDGE DEWATERING FACILITIES
POWER & CONTROL - MEZZANINE

M-C NO. 832221
E-07
98 of 112
SC NO.

82624

GENERAL NOTES

1. ALL CONSTRUCTION MATERIALS SHALL COMPLY WITH THE REQUIREMENTS OF NEC ARTICLE 500 AND ARTICLE 501 FOR CLASS 1 DIVISION 2 INSTALLATIONS. ENCLOSURES SHALL BE NEMA 7.
2. VALVES FV 3202, FV 3204, FV 3306, FV 3308, RELAYS AND INSTRUMENTATION ARE NEW. ALL ELSE IS EXISTING OR OTHER CONTRACTS.

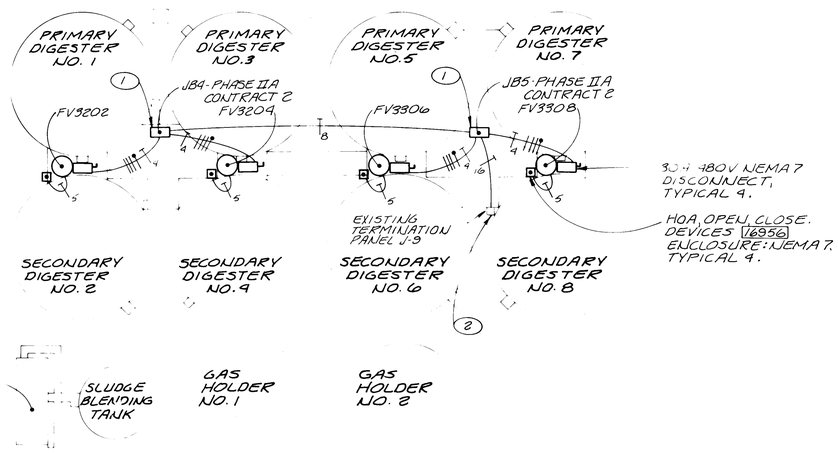

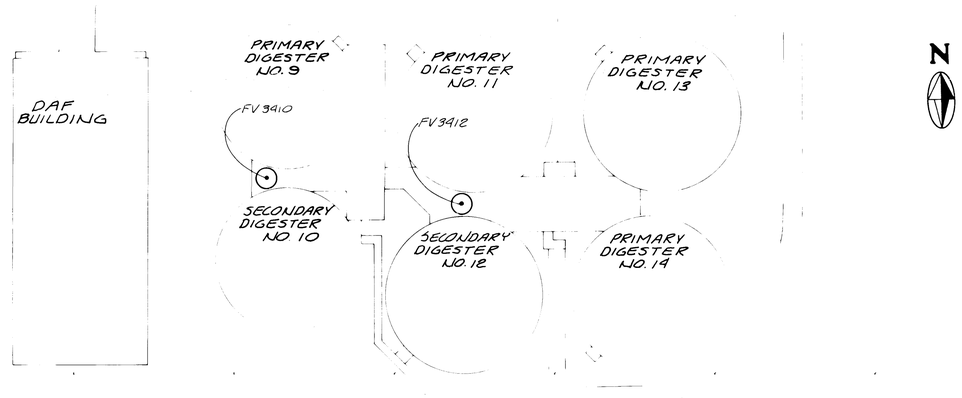

SCALE 1"=40'

NOTES

1. SPLICE TO CONDUCTORS FOR DIGESTER INLET PLUG VALVES FURNISHED UNDER PHASE IIA CONTRACT 2.
2. EXISTING TERMINATION PANEL J-9. CONNECT VALVE CONTROLS TO CONTACTS OF NEW RELAYS AS SHOWN ON SCHEMATICS.

RECORD DRAWING

DATE:	DRAFTED BY:
AUG. 1988	MCA

THESE RECORD DRAWINGS HAVE BEEN PREPARED, IN PART, ON THE BASIS OF INFORMATION COMPILED AND FURNISHED BY OTHERS. THE ENGINEER WILL NOT BE RESPONSIBLE FOR ANY ERRORS OR OMISSIONS WHICH HAVE BEEN INCORPORATED INTO THIS DOCUMENT AS A RESULT.

STEVEN E. SORELSON NEW MEXICO 6570 REGISTERED PROFESSIONAL ENGINEER 5-85

1 2 3 4 5 6 7 8 9 10 11 12 13 14 15 16 17 18 19 20 21 22 23 24 25 26 27 28 29
26 3 6 9 4 9 9 8

NO.	DATE	REVISIONS	APPROVED

DESIGNED SS
DRAWN STAFF
CHECKED
APPROVED
APPROVED
DATE 5-85

MOLZEN-CORBIN
STANLEY CONSULTANTS
A JOINT VENTURE

AS SHOWN
GRAPHIC SCALE

CITY OF ALBUQUERQUE, NEW MEXICO
SOLIDS HANDLING FACILITIES
PHASE II B-3, CONTRACT 1

INTERIM SLUDGE DEWATERING FACILITIES
POWER & CONTROL-DIGESTERS 2-12

M-C NO. 832221
E-08
99 OF 112
SC NO.

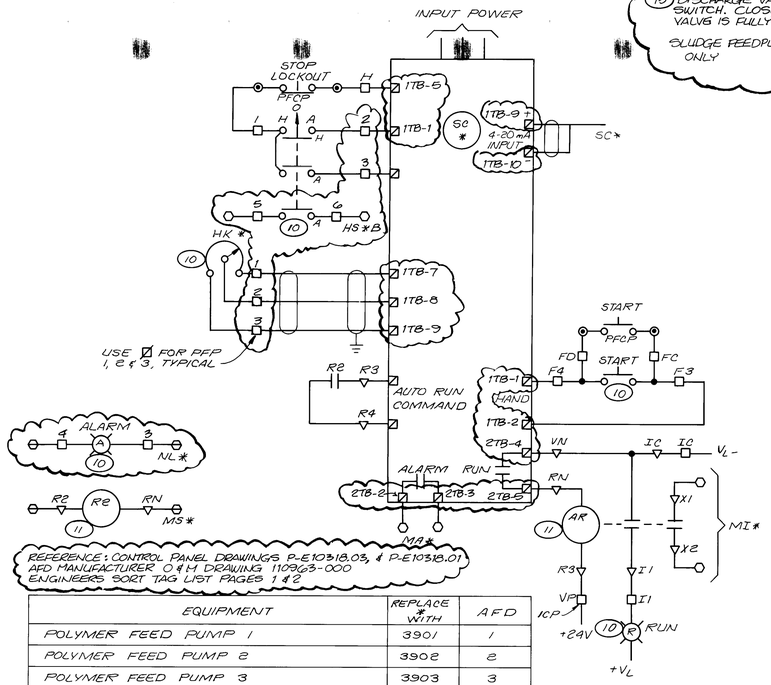

REFERENCE: CONTROL PANEL DRAWINGS P-E10318.03, & P-E10318.01
AFD MANUFACTURER O & M DRAWING 1109G3-000
ENGINEERS SORT TAG LIST PAGES 1 & 2

EQUIPMENT	REPLACE * WITH	AFD
POLYMER FEED PUMP 1	3901	1
POLYMER FEED PUMP 2	3902	2
POLYMER FEED PUMP 3	3903	3
POLYMER FEED PUMP 4	3904	4

SCHEMATIC 5

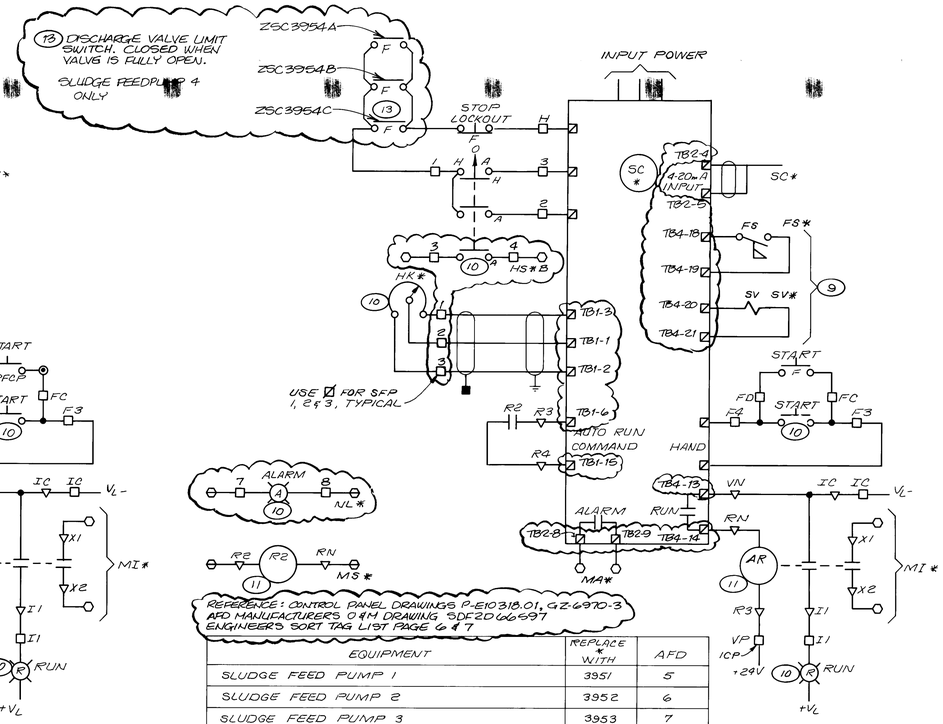

REFERENCE: CONTROL PANEL DRAWINGS P-E10318.01, G2-6970-3
AFD MANUFACTURERS O & M DRAWING SDFED66697
ENGINEERS SORT TAG LIST PAGE 6 & 7

EQUIPMENT	REPLACE * WITH	AFD
SLUDGE FEED PUMP 1	3951	5
SLUDGE FEED PUMP 2	3952	6
SLUDGE FEED PUMP 3	3953	7
SLUDGE FEED PUMP 4	3954	8

SCHEMATIC 7

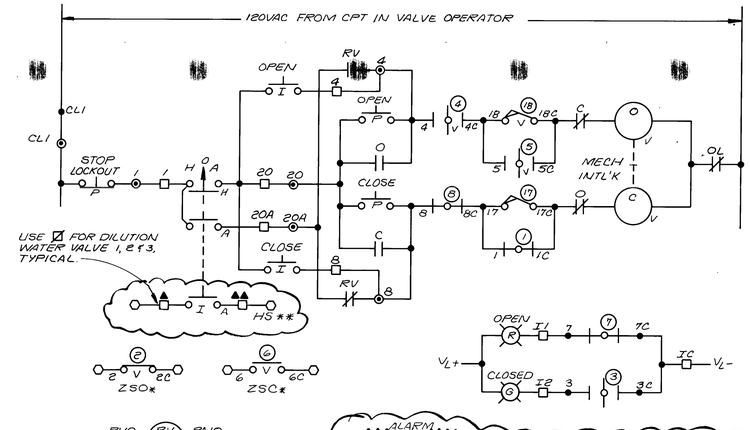

REFERENCE: CONTROL PANEL DRAWINGS P-E10318.02 & P-E10318.03
MTCP CONNECTION DIAGRAM G2970-2
PFCP CONNECTION DIAGRAM G2970-1
ENGINEERS SORT TAG LIST PAGES 2 & 3

EQUIPMENT	REPLACE ▲ WITH	REPLACE ▲▲ WITH	REPLACE ▲▲▲ WITH	REPLACE P WITH	REPLACE * WITH	REPLACE * * WITH	REPLACE *** WITH
POLYMER OUTLET VALVE 1	3	4	7	8	MTCP	3931B	3931H	3931C
POLYMER OUTLET VALVE 2	3	4	1	2	MTCP	3932B	3932H	3932C
DILUTION WATER VALVE 1	1	2	7	8	PFCP	3911	3911B	
DILUTION WATER VALVE 2	1	2	7	8	PFCP	3912	3912B	
DILUTION WATER VALVE 3	1	2	7	8	PFCP	3913	3913B	
TANK FILL VALVE NO. 1	4	5	3	4	MTCP	3931A	(12)	
TANK FILL VALVE NO. 2	7	8	3	4	MTCP	3932A	(12)	

SCHEMATIC 9

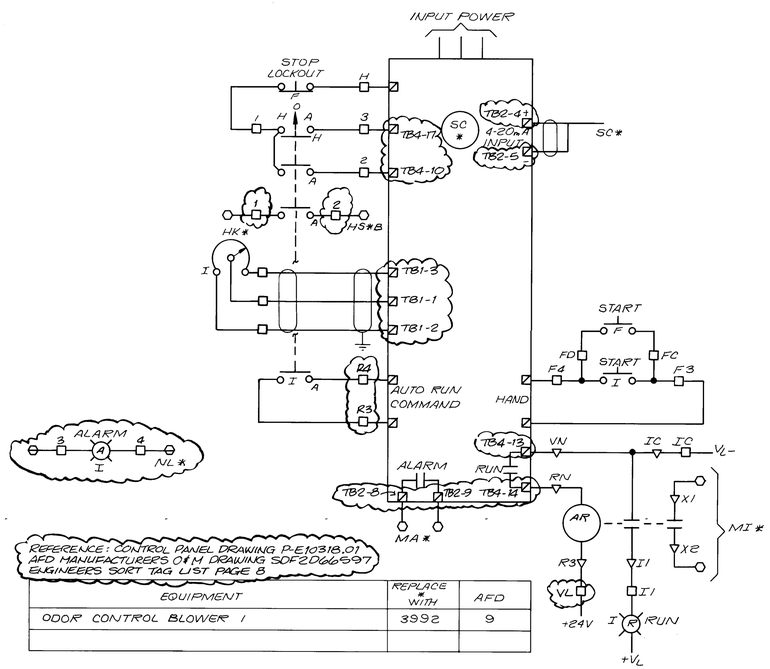

REFERENCE: CONTROL PANEL DRAWING P-E10318.01
AFD MANUFACTURERS O & M DRAWING SDF2D66697
ENGINEERS SORT TAG LIST PAGE 8

EQUIPMENT	REPLACE * WITH	AFD
ODOR CONTROL BLOWER 1	3992	9

SCHEMATIC 6

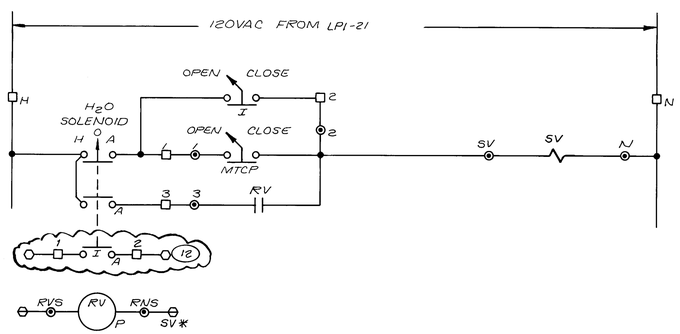

REFERENCE: CONTROL PANEL DRAWING P-E10318.02
MTCP CONNECTION DIAGRAM G2970-2
ENGINEERS SORT TAG LIST PAGES 2 & 3

EQUIPMENT	REPLACE * WITH
WETTING UNIT SOLENOID VALVE NO. 1	3921
WETTING UNIT SOLENOID VALVE NO. 2	3922

SCHEMATIC 8

FOR LEGEND, NOTES, & GENERAL NOTES, SEE SHEET E-11.

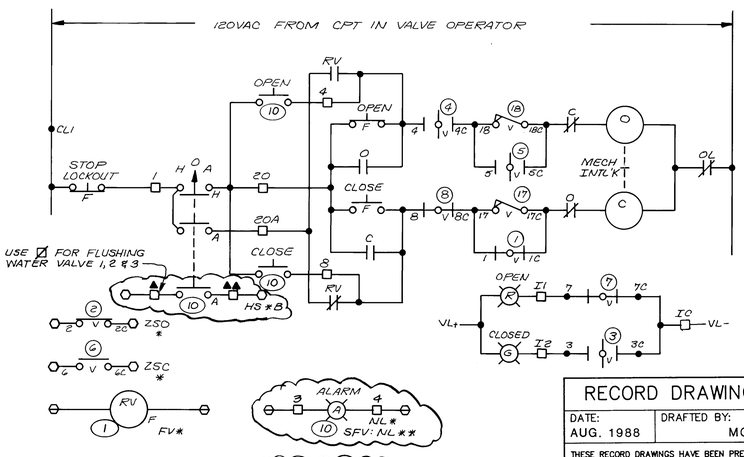

REFERENCE: CONTROL PANEL DRAWINGS P-E10318.01 & P-E10318.03
ENGINEERS SORT TAG LIST PAGES 2 & 6

EQUIPMENT	REPLACE ▲ WITH	REPLACE ▲▲ WITH	REPLACE ** WITH	REPLACE WITH
FLUSHING WATER VALVE 1	3	4		3915
FLUSHING WATER VALVE 2	3	4		3916
FLUSHING WATER VALVE 3	3	4		3917
SLUDGE FEED VALVE	7	8	3950B	3950

SCHEMATIC 10

RECORD DRAWING

DATE: AUG. 1988	DRAFTED BY: MCA

THESE RECORD DRAWINGS HAVE BEEN PREPARED, IN PART, ON THE BASIS OF INFORMATION COMPILED AND FURNISHED BY OTHERS. THE ENGINEER WILL NOT BE RESPONSIBLE FOR ANY ERRORS OR OMISSIONS WHICH HAVE BEEN INCORPORATED INTO THIS DOCUMENT AS A RESULT.

STEVEN E. SCHERSON NEW MEXICO 6570 REGISTERED PROFESSIONAL ENGINEER 5-25

26 3694 1 0088

NO.	DATE	REVISIONS	APPROVED

DESIGNED SS
DRAWN STREF
CHECKED
APPROVED
APPROVED
DATE 5-85

MOLZEN-CORBIN
STANLEY CONSULTANTS
A JOINT VENTURE

NONE
GRAPHIC SCALE

CITY OF ALBUQUERQUE, NEW MEXICO
SOLIDS HANDLING FACILITIES
PHASE II B-3, CONTRACT 1

INTERIM SLUDGE DEWATERING FACILITIES
SCHEMATICS

M-C NO. 832221
E-09
100 OF 112
SC NO.

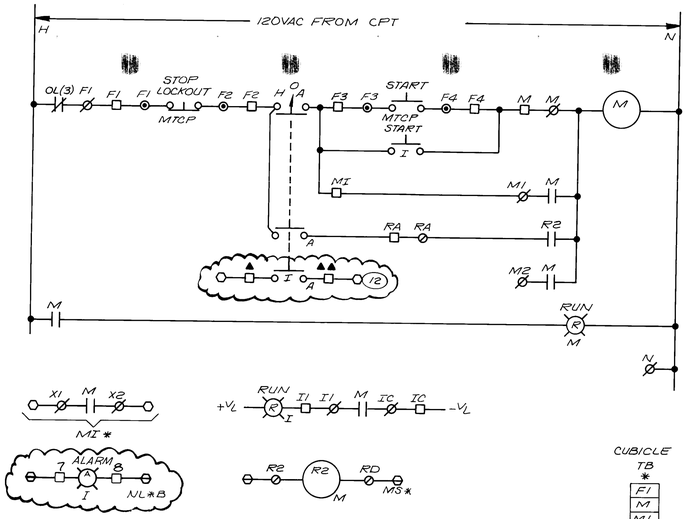

EQUIPMENT	REPLACE ▲ WITH	REPLACE ▲▲ WITH	REPLACE * WITH
POLYMER MIXER 1	2	5	3931
POLYMER MIXER 2	4	8	3932

REFERENCE: CONTROL PANEL DRAWINGS P-E10318.02, G970-2
MCC DRAWING NO'S. D-2216-1-C & D-2216-2-7, ENGINEERS SORT TAG LIST PAGE 3.

CUBICLE TB *: F1, M, M1, M2, I1, IC, N, X1, X2

SCHEMATIC 11

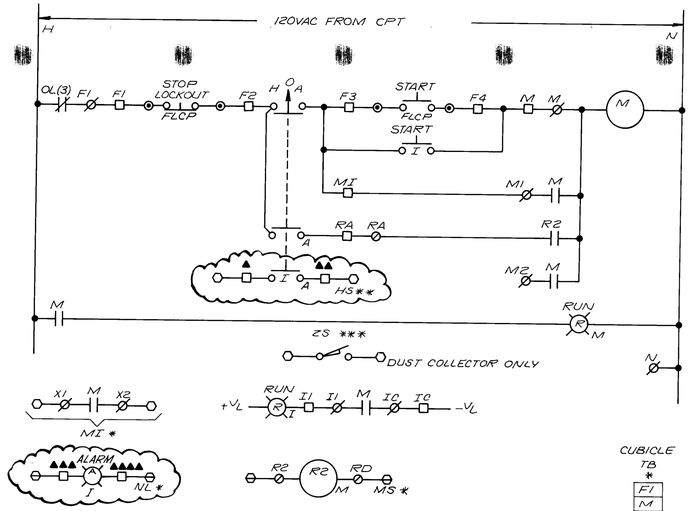

EQUIPMENT	REPLACE ▲ WITH	REPLACE ▲▲ WITH	REPLACE ▲▲▲ WITH	REPLACE ▲▲▲▲ WITH	REPLACE *** WITH	REPLACE ** WITH	REPLACE * WITH
DUST COLLECTOR #1	3	4	1	2	3921	3921K	3921C
DUST COLLECTOR #2	3	4	3	4	3922	3922K	3922C
BLOWER 1	2	3	5	6	—	12	3921B
BLOWER 2	4	5	5	6	—	12	3922B

REFERENCE: CONTROL PANEL DRAWINGS P-E10318.02 & G970-1
MCC DRAWING NO'S D-2216-1-9, D-2216-1-12, D-2216-2-5, & D-2216-2-10
ENGINEERS SORT TAG LIST PAGES 2 & 3

CUBICLE TB *: F1, M, M1, M2, I1, IC, N, X1, X2

SCHEMATIC 13

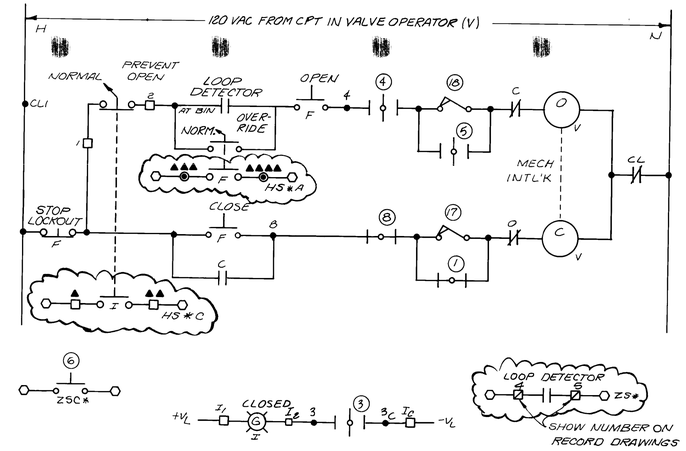

REFERENCE: CONTROL PANEL DRAWING P-E10318.01 & GZ-2
ENGINEERS SORT TAG LIST PAGES 7 & 8

EQUIPMENT	REPLACE ▲ WITH	REPLACE ▲▲ WITH	REPLACE ▲▲▲ WITH	REPLACE ▲▲▲▲ WITH	REPLACE * WITH
NORTH BIN GATE	3	4	8	7	3963
SOUTH BIN GATE	5	6	16	15	3964

SCHEMATIC 15

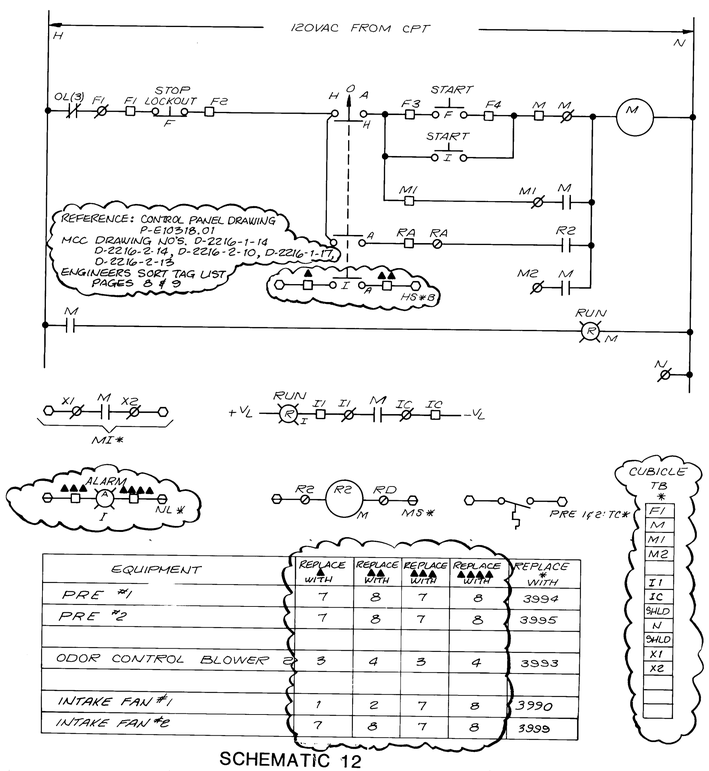

REFERENCE: CONTROL PANEL DRAWING P-E10318.01
MCC DRAWING NO'S. D-2216-1-14, D-2216-2-14, D-2216-2-10, D-2216-1-17, D-2216-2-13
ENGINEERS SORT TAG LIST PAGES 8 & 9

EQUIPMENT	REPLACE ▲ WITH	REPLACE ▲▲ WITH	REPLACE ▲▲▲ WITH	REPLACE ▲▲▲▲ WITH	REPLACE * WITH
PRE #1	7	8	7	8	3994
PRE #2	7	8	7	8	3995
ODOR CONTROL BLOWER 2	3	4	3	4	3993
INTAKE FAN #1	1	2	7	8	3990
INTAKE FAN #2	7	8	7	8	3999

CUBICLE TB *: F1, M, M1, M2, I1, IC, SHLD, N, SHLD, X1, X2

SCHEMATIC 12

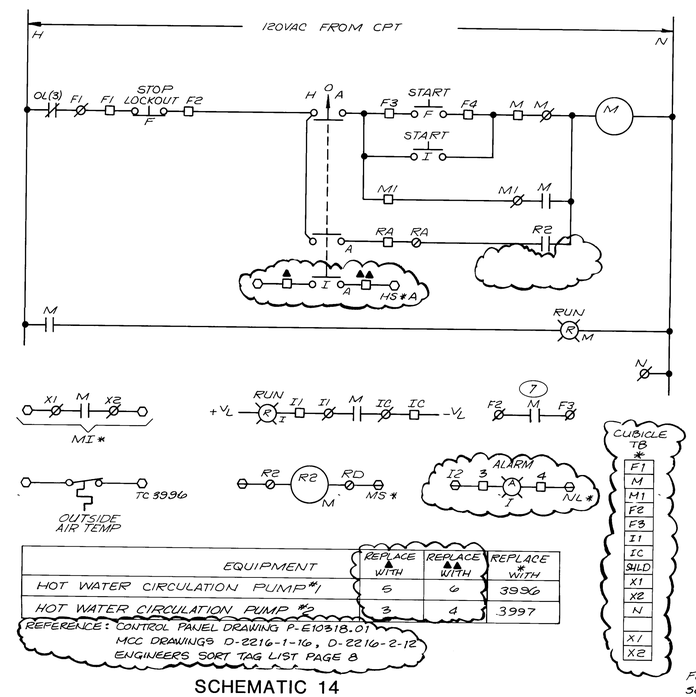

EQUIPMENT	REPLACE ▲ WITH	REPLACE ▲▲ WITH	REPLACE * WITH
HOT WATER CIRCULATION PUMP #1	5	6	3996
HOT WATER CIRCULATION PUMP #2	3	4	3997

REFERENCE: CONTROL PANEL DRAWING P-E10318.01
MCC DRAWINGS D-2216-1-16, D-2216-2-12
ENGINEERS SORT TAG LIST PAGE 8

CUBICLE TB *: F1, M, M1, F2, F3, I1, IC, SHLD, X1, X2, N, X1, X2

SCHEMATIC 14

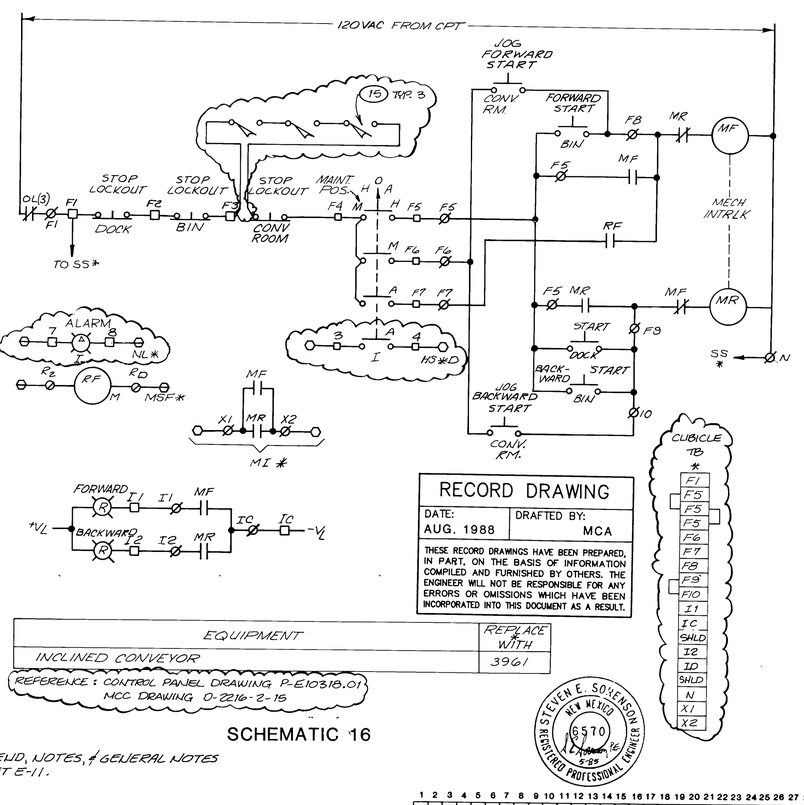

EQUIPMENT	REPLACE WITH
INCLINED CONVEYOR	3961

REFERENCE: CONTROL PANEL DRAWING P-E10318.01
MCC DRAWING D-2216-2-16

CUBICLE TB *: F1, F5, F5, F5, F6, F7, F8, F9, F10, I1, IC, SHLD, I2, ID, SHLD, N, X1, X2

RECORD DRAWING

DATE: AUG. 1988 | DRAFTED BY: MCA

THESE RECORD DRAWINGS HAVE BEEN PREPARED, IN PART, ON THE BASIS OF INFORMATION COMPILED AND FURNISHED BY OTHERS. THE ENGINEER WILL NOT BE RESPONSIBLE FOR ANY ERRORS OR OMISSIONS WHICH HAVE BEEN INCORPORATED INTO THIS DOCUMENT AS A RESULT.

SCHEMATIC 16

FOR LEGEND, NOTES, & GENERAL NOTES SEE SHEET E-11.

STEVEN E. SOLENSON NEW MEXICO 6570 REGISTERED PROFESSIONAL ENGINEER 5-25-88

1 2 3 4 5 6 7 8 9 10 11 12 13 14 15 16 17 18 19 20 21 22 23 24 25 26 27 28 29
2 6 3 6 9 4 1 0 1 8 8

NO.	DATE	REVISIONS	APPROVED

DESIGNED SS
DRAWN STAFF
CHECKED
APPROVED
APPROVED
DATE 5-85

MOLZEN-CORBIN
STANLEY CONSULTANTS
A JOINT VENTURE

NONE
GRAPHIC SCALE

CITY OF ALBUQUERQUE, NEW MEXICO
SOLIDS HANDLING FACILITIES
PHASE II B-3, CONTRACT 1

INTERIM SLUDGE DEWATERING FACILITIES
SCHEMATICS

M-C NO. 832221
E-10
101 OF 112
SC NO.

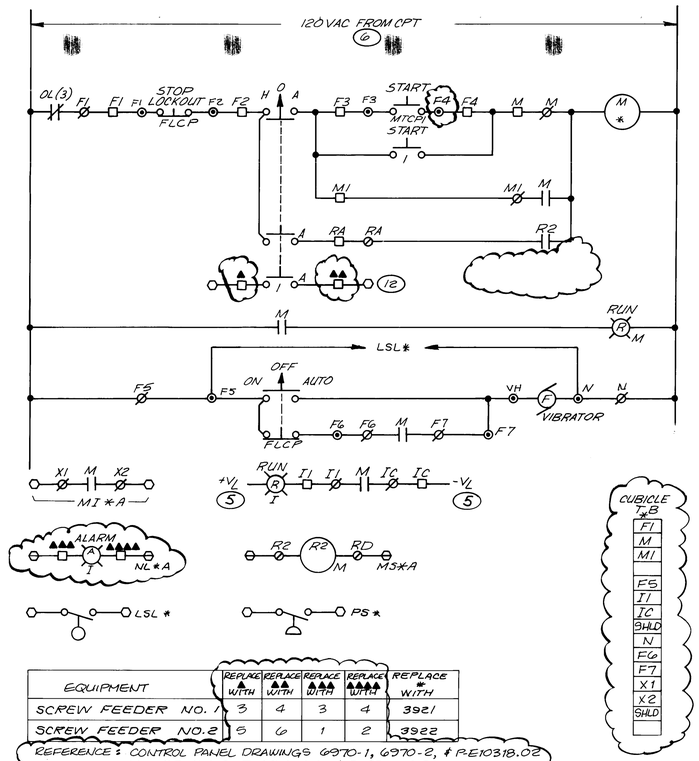

EQUIPMENT	REPLACE WITH	REPLACE WITH	REPLACE WITH	REPLACE WITH	REPLACE # WITH
SCREW FEEDER NO. 1	3	4	3	4	3921
SCREW FEEDER NO. 2	5	6	1	2	3922

REFERENCE: CONTROL PANEL DRAWINGS 6970-1, 6970-2, & P-E10318.02
MCC DRAWINGS D-22116-1-6 & D-22116-2-9
ENGINEERS SORT TAG LIST PAGES 2 & 3

SCHEMATIC 1

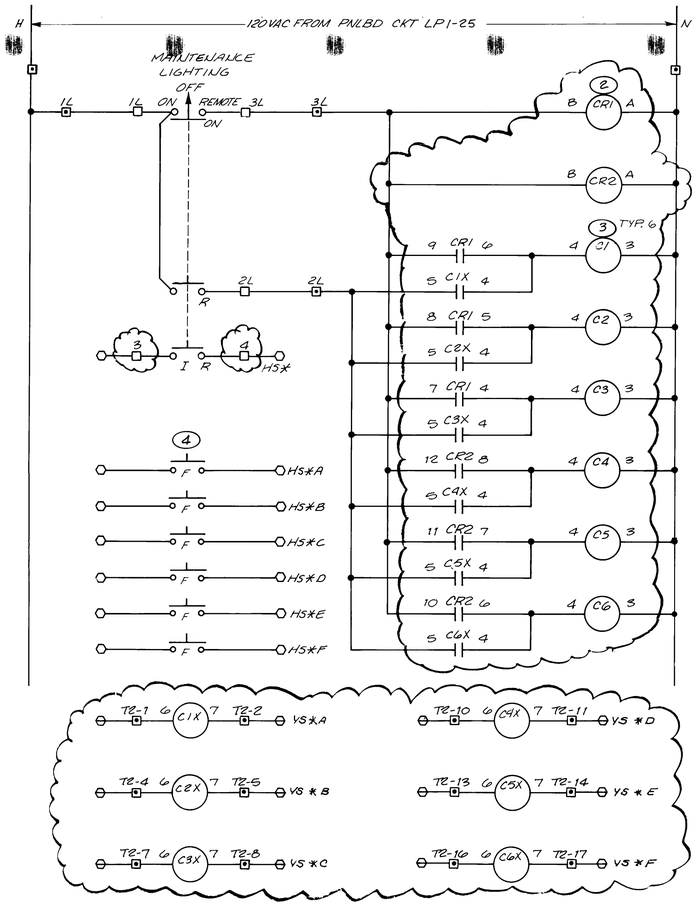

EQUIPMENT	REPLACE # WITH
SLUDGE DEWATERING LIGHTING	6939

REFERENCE: CONTROL PANEL DRAWING P-E10318.01
O & M LIGHTING CONTACTOR PANEL DRAWING
ENGINEERS SORT TAG LIST PAGE 9

SCHEMATIC 3

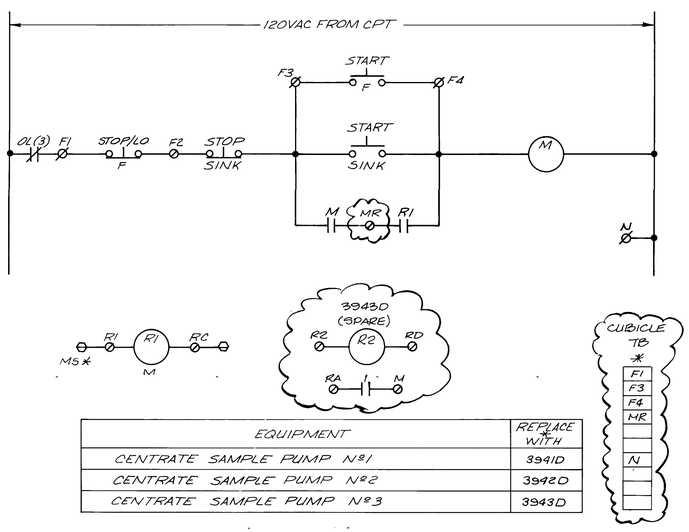

EQUIPMENT	REPLACE # WITH
CENTRATE SAMPLE PUMP Nº1	3941D
CENTRATE SAMPLE PUMP Nº2	3942D
CENTRATE SAMPLE PUMP Nº3	3943D

SCHEMATIC 2

REFERENCE: MCC DRAWING D-22116-1-11, D-22116-1-13, & D-22116-2-8
ENGINEERS SORT TAG LIST PAGES 3 - 16

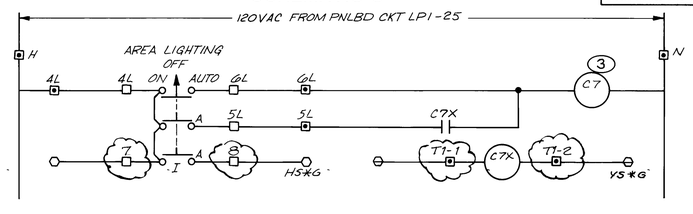

EQUIPMENT	REPLACE # WITH
SLUDGE DEWATERING LIGHTING	6939

REFERENCE: CONTROL PANEL DRAWING P-E10318.01
O & M DRAWING LIGHTING CONTACTOR PANEL
ENGINEERS SORT TAG LIST PAGE 9

SCHEMATIC 4

LEGEND

Ø	TB POINT - MCC CUBICLE AND MASTER COMPARTMENT
Ø	TB POINT - MCC MASTER COMPARTMENT ONLY
□	TB POINT - INTEGRATED CONTROL PANEL
○	TB POINT - PROCESS CONTROL UNIT INPUT
⊖	TB POINT - PROCESS CONTROL UNIT OUTPUT
▽	TB POINT - AFD INTERPOSING RELAY PANEL
⊙	TB POINT - LOCAL CONTROL PANEL
Ø	TB POINT - CENTRIFUGE CONTROL PANEL
⊡	TB POINT - LIGHTING CONTACTOR
⊠	TB POINT - PACKAGED CONTROLS
●	TB POINT - VALVE OPERATOR
C3	CONTACTOR
C3X	INTERPOSING RELAY - LIGHTING CONTACTOR
M	EQUIPMENT IN MOTOR CONTROL CENTER
F	EQUIPMENT IN FIELD
I or ICP	EQUIPMENT IN INTEGRATED CONTROL PANEL
V	EQUIPMENT IN VALVE OPERATOR
P	EQUIPMENT IN PANEL
CCP	EQUIPMENT IN CENTRIFUGE CONTROL PANEL
FLCP	DRY FEEDER LOCAL CONTROL PANEL
MTCP	MIXING TANK LOCAL CONTROL PANEL
PFCP	POLYMER FEED LOCAL CONTROL PANEL
CLP	CENTRIFUGE LOCAL PANEL
BIP	BACKDRIVE INTERFACE PANEL
SS	SPEED SWITCH
R1	INTERPOSING RELAY - STOP
R2	INTERPOSING RELAY - START OR RUN
RV	INTERPOSING RELAY - VALVE CONTROL
AR	"RUNNING" RELAY

GENERAL NOTES

1. ALL RELAYS WITH DESIGNATION BEGINNING WITH "A", "C", OR "R" SUCH AS C1X, RV ETC. SHALL BE STRUTHERS-DUNN 219ABA156, 24VDC COILS TO MATCH EXISTING.
2. CONDUCTORS TO TERMINALS WITH LABELS I, R, S AND X: SHIELDED PAIR RUN SEPARATE FROM ALL AC CONDUCTORS.

NOTES

1. MOUNT IN NEMA 4X ENCLOSURE ADJACENT TO VALVE. NP: INTERPOSING RELAY FOR VALVE.
2. CONTROL RELAY, 120VAC COIL, 6 PNO CONTACTS, STRUTHERS-DUNN 219FXXP.
3. 16930 LIGHTING CONTACTOR.
4. NP: MAINTENANCE LIGHTS. PUSH ONCE FOR 2 HOURS, TWICE FOR FOUR HOURS, HOLD 5 SECONDS TO TURN OFF. TYPICAL 6
5. VOLTAGE FOR INCANDESCENT PILOT FROM DC POWER SUPPLY IN ICP, TYPICAL.
6. VA CAPACITY OF CPT: SUFFICIENT FOR STARTER, PILOT LIGHT, AND 60W CONTINUOUS LOAD OF VIBRATOR, 150VA MILIMUM.
7. CONNECT CONTACT OF EACH PUMP TO BOILER CONTROLS SO BOILER RUNS ONLY WHEN AT LEAST ONE PUMP IS RUNNING.
8. CONNECT TO CE BOILER CONTROL TO STOP BOILER WHEN PUMP IS OFF.
9. SEAL WATER SOLENOID VALVE AND FLOW SWITCH. ENERGIZE VALVE BEFORE STARTING PUMP. RUN PUMP ONLY IF FLOW SWITCH IS CLOSED.
10. FOR LOCATION SEE INSTRUMENTATION INDEX OR CCP AND ICP DETAILS.
11. MOUNT IN AFD ENCLOSURE IN MCC ROOM.
12. CONNECT 5 SWITCHES (EQUIPMENT #1) IN SERIES FOR PCU DI "HS 3921" AND 5 IN SERIES (EQUIPMENT # 2) FOR "HS 3922".
13. DISCHARGE VALVE LIMIT SWITCH. CLOSED WHEN VALVE IS FULLY OPEN.
14. VALVE, OPERATOR, POWER WIRING, CONTROL WIRING, INSTRUMENTATION WIRING: EXISTING.
15. LIMIT SWITCH AT TOP OF CONVEYOR TO DETECT BREAK IN BELT OR TRACK. SWITCHES ARE N.O., HELD CLOSED.

RECORD DRAWING

DATE: AUG. 1988	DRAFTED BY: MCA

THESE RECORD DRAWINGS HAVE BEEN PREPARED, IN PART, ON THE BASIS OF INFORMATION COMPILED AND FURNISHED BY OTHERS. THE ENGINEER WILL NOT BE RESPONSIBLE FOR ANY ERRORS OR OMISSIONS WHICH HAVE BEEN INCORPORATED INTO THIS DOCUMENT AS A RESULT.

STEVEN E. SORENSON NEW MEXICO 8570 REGISTERED PROFESSIONAL ENGINEER 5-86

1 2 3 4 5 6 7 8 9 10 11 12 13 14 15 16 17 18 19 20 21 22 23 24 25 26 27 28 29
26 3 6 9 4 1 0 2 8 8

NO.	DATE	REVISIONS	APPROVED

DESIGNED SS
DRAWN STAFF
CHECKED
APPROVED
APPROVED
DATE 5-86

MOLZEN-CORBIN
STANLEY CONSULTANTS
A JOINT VENTURE

NONE
GRAPHIC SCALE

CITY OF ALBUQUERQUE, NEW MEXICO
SOLIDS HANDLING FACILITIES
PHASE II B-3, CONTRACT 1

INTERIM SLUDGE DEWATERING FACILITIES
SCHEMATICS

M-C NO. 832221
E-11
102 of 112
SC NO.

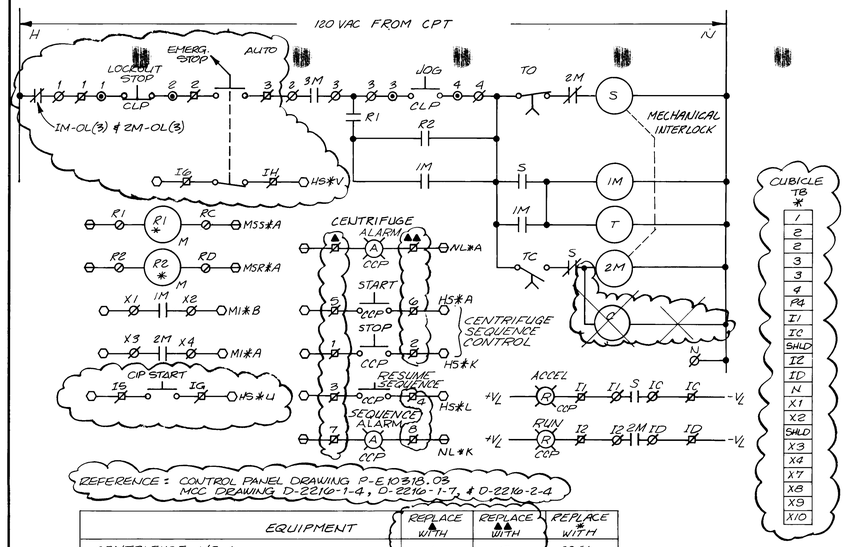

REFERENCE: CONTROL PANEL DRAWING P-E10318.03
MCC DRAWING D-2216-1-4, D-2216-1-7, & D-2216-2-4

EQUIPMENT	REPLACE WITH	REPLACE ▲▲ WITH	REPLACE * WITH
CENTRIFUGE NO. 1	6	7	3941
CENTRIFUGE NO. 2	5	6	3942
CENTRIFUGE NO. 3	5	6	3943

SCHEMATIC 17

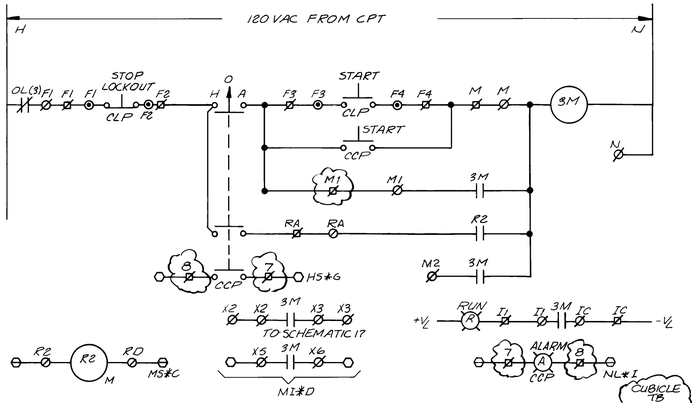

EQUIPMENT	REPLACE * WITH
LUBE OIL PUMP NO. 1	3941
LUBE OIL PUMP NO. 2	3942
LUBE OIL PUMP NO. 3	3943

REFERENCE: CONTROL PANEL DRAWING P-E10318.03
MCC DRAWING D-2216-1-5, D-2216-1-10, & D-2216-2-6
ENGINEERS SORT TAG LIST PAGES 3-6

SCHEMATIC 18

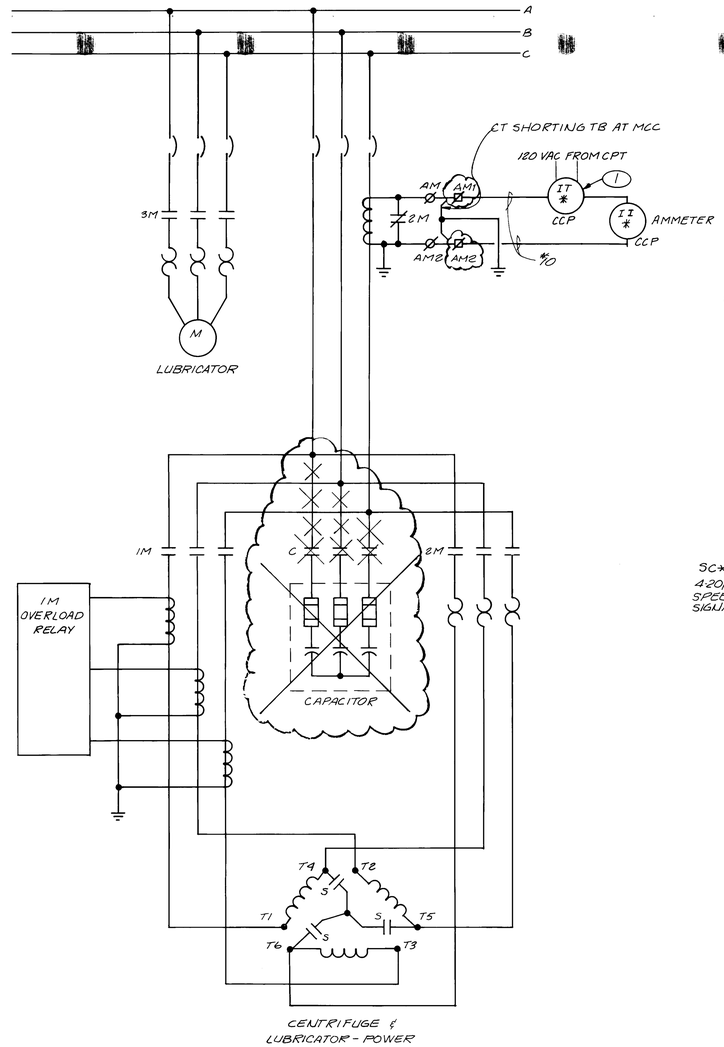

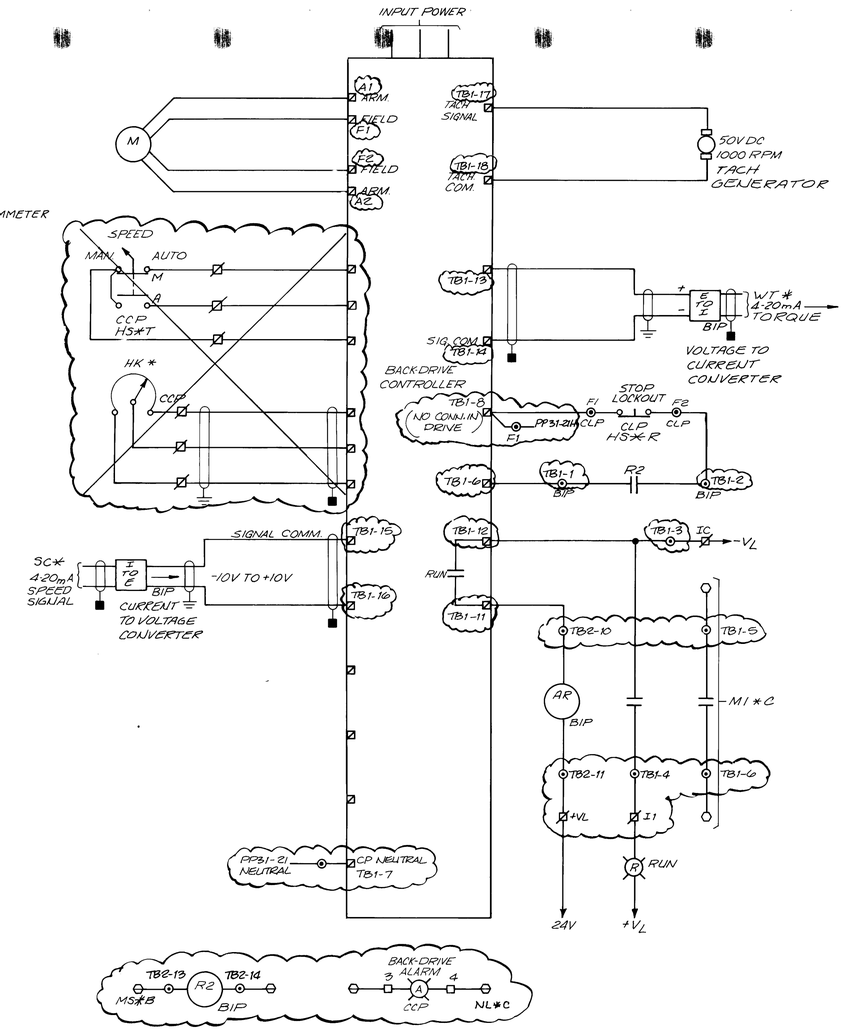

REFERENCE: CONTROL PANEL DRAWING P-E10318.03 & G-2-1
CONTROLLER MANUFACTURERS O & M DRAWING
ENGINEERS SORT TAG LIST PAGE 3-6

EQUIPMENT	REPLACE * WITH
CENTRIFUGE BACK-DRIVE No. 1	3941
CENTRIFUGE BACK-DRIVE No. 2	3942
CENTRIFUGE BACK-DRIVE No. 3	3943

SCHEMATIC 19

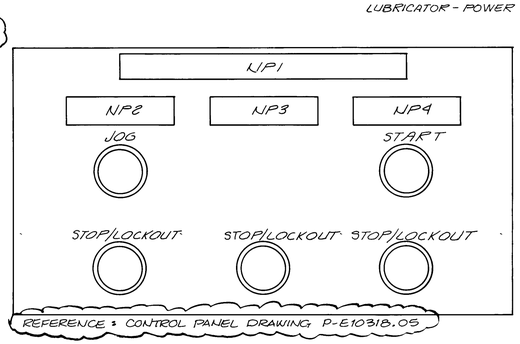

REFERENCE: CONTROL PANEL DRAWING P-E10318.05

NAMEPLATE	ENGRAVING	LETTER SIZE
NP1	CENTRIFUGE 1,2,3 LOCAL PANEL (CLP)	3/8"
NP2	CENTRIFUGE MAIN DRIVE MOTOR	1/8"
NP3	CENTRIFUGE BACK DRIVE MOTOR	1/8"
NP4	LUBE OIL PUMP	1/8"

CENTRIFUGE LOCAL PANEL (CLP)

NO SCALE — TYPICAL 3

NOTES

(1) SAME AS SECTION 16980 2.07 B EXCEPT CURRENT TRANSDUCER RATHER THAN POWER TRANSDUCER. SAME MANUFACTURER.

FOR LEGEND, NOTES, & GENERAL NOTES, SEE SHEET E-11.

RECORD DRAWING

DATE: AUG. 1988 — DRAFTED BY: MCA

THESE RECORD DRAWINGS HAVE BEEN PREPARED, IN PART, ON THE BASIS OF INFORMATION COMPILED AND FURNISHED BY OTHERS. THE ENGINEER WILL NOT BE RESPONSIBLE FOR ANY ERRORS OR OMISSIONS WHICH HAVE BEEN INCORPORATED INTO THIS DOCUMENT AS A RESULT.

STEVEN E. SORENSON — NEW MEXICO — 6570 — REGISTERED PROFESSIONAL ENGINEER

26 3694 1038 8

NO.	DATE	REVISIONS	APPROVED

DESIGNED SS
DRAWN STAFF
CHECKED
APPROVED
APPROVED
DATE 5-85

MOLZEN-CORBIN
STANLEY CONSULTANTS
A JOINT VENTURE

NONE
GRAPHIC SCALE

CITY OF ALBUQUERQUE, NEW MEXICO
SOLIDS HANDLING FACILITIES
PHASE II B-3, CONTRACT 1

INTERIM SLUDGE DEWATERING FACILITIES
SCHEMATICS & CLP DETAIL

M-C NO. 832221
E-12
103 OF 112
SC NO.

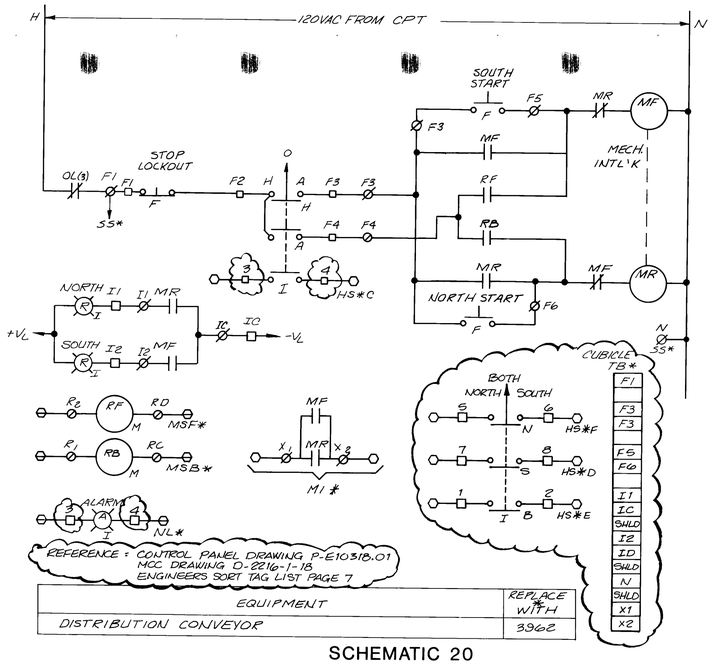

EQUIPMENT	REPLACE * WITH
DISTRIBUTION CONVEYOR	3962

SCHEMATIC 20

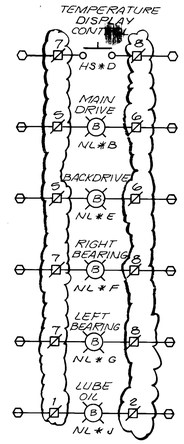

EQUIPMENT	REPLACE * WITH
TEMPERATURE DISPLAY CONTROLLER 1	3941
TEMPERATURE DISPLAY CONTROLLER 2	3942
TEMPERATURE DISPLAY CONTROLLER 3	3943

SCHEMATIC 23

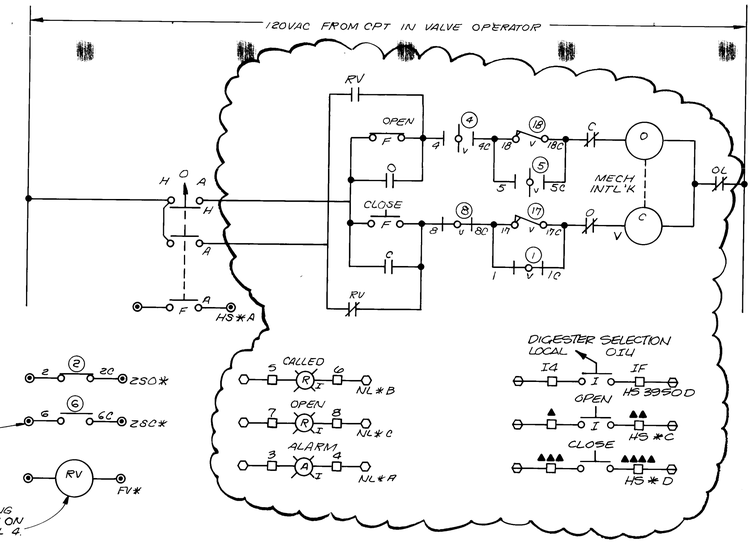

EQUIPMENT	REPLACE * WITH	REPLACE ▲ WITH	REPLACE ▲▲ WITH	REPLACE ▲▲▲ WITH	REPLACE ▲▲▲▲ WITH
DIGESTER 2 MOTOR OPERATED VALVE	3202	7	8	1	2
DIGESTER 4 MOTOR OPERATED VALVE	3204	3	4	1	2
DIGESTER 6 MOTOR OPERATED VALVE	3306	7	8	1	2
DIGESTER 8 MOTOR OPERATED VALVE	3308	2	5	3	4
DIGESTER 10 MOTOR OPERATED VALVE (14)	3410	7	8	1	2
DIGESTER 12 MOTOR OPERATED VALVE (14)	3412	1	2	3	4

REFERENCE: CONTROL PANEL DRAWING P-E10318.01
ENGINEERS SORT TAG LIST PAGE 1

SCHEMATIC 26

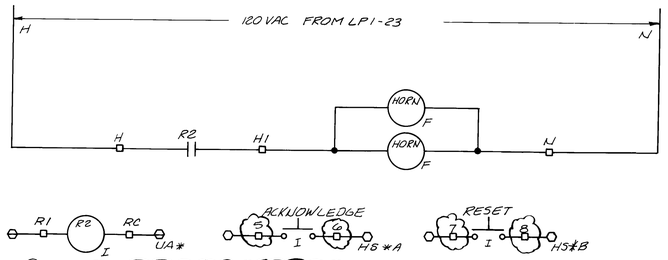

EQUIPMENT	REPLACE * WITH
ALARM HORN	3975

SCHEMATIC 21

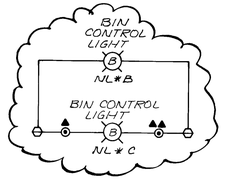

EQUIPMENT	REPLACE ▲ WITH	REPLACE ▲▲ WITH	REPLACE ▲▲▲ WITH
NORTH BIN CONTROL LIGHTS	19	20	3963
SOUTH BIN CONTROL LIGHTS	22	23	3964

SCHEMATIC 24

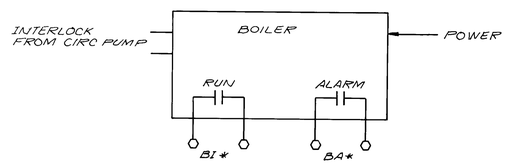

EQUIPMENT	REPLACE * WITH
BUILDING BOILER	3996
CE BOILER	3998

REFERENCE: ENGINEERS SORT TAG LIST PAGES 8 & 9

SCHEMATIC 27

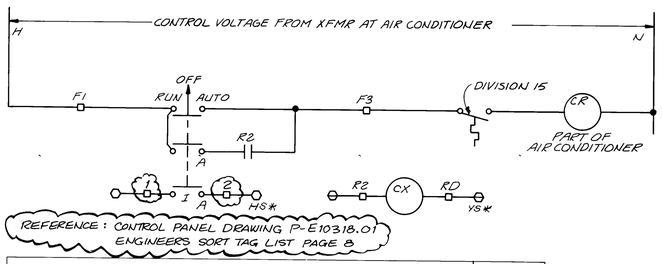

EQUIPMENT	REPLACE * WITH
CONTROL ROOM AIR CONDITIONER	3991

SCHEMATIC 22

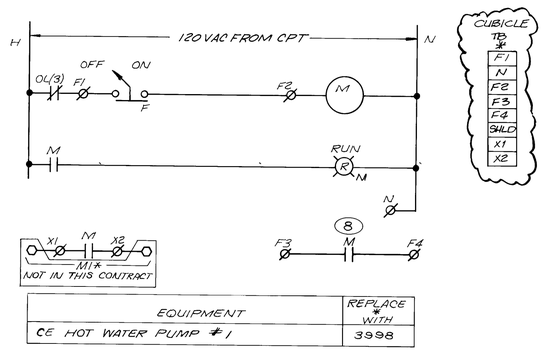

EQUIPMENT	REPLACE * WITH
CE HOT WATER PUMP #1	3998

SCHEMATIC 25

FOR LEGEND, NOTES, & GENERAL NOTES, SEE SHEET E-11.

RECORD DRAWING

DATE: AUG. 1988 | DRAFTED BY: MCA

THESE RECORD DRAWINGS HAVE BEEN PREPARED, IN PART, ON THE BASIS OF INFORMATION COMPILED AND FURNISHED BY OTHERS. THE ENGINEER WILL NOT BE RESPONSIBLE FOR ANY ERRORS OR OMISSIONS WHICH HAVE BEEN INCORPORATED INTO THIS DOCUMENT AS A RESULT.

STEVEN E. SORENSON NEW MEXICO 6570 REGISTERED PROFESSIONAL ENGINEER 5-85

1 2 3 4 5 6 7 8 9 10 11 12 13 14 15 16 17 18 19 20 21 22 23 24 25 26 27 28 29
2 6 3 6 9 4 1 0 4 8 8

NO.	DATE	REVISIONS	APPROVED

DESIGNED SS
DRAWN STAEF
CHECKED
APPROVED
APPROVED
DATE 5-85

MOLZEN-CORBIN
STANLEY CONSULTANTS
A JOINT VENTURE

NONE
GRAPHIC SCALE

CITY OF ALBUQUERQUE, NEW MEXICO
SOLIDS HANDLING FACILITIES
PHASE II B-3, CONTRACT 1

INTERIM SLUDGE DEWATERING FACILITIES
SCHEMATICS

M-C NO. 832221
E-13
104 of 112
SC NO.

82624

LP1
LIGHTING PANEL
120/208V 3ø 4W

DESCRIPTION	A	No	ø	No	A	DESCRIPTION
MEZZANINE LIGHTS	20	1	A	2	20	CENTRIFUGE & CONV. LIGHTS
2ND FLOOR FLUORESENT LAMPS	20	3	B	4	2P	
1ST FLOOR GEN. & POLY	20	5	C	6	20	POLY, STAIRS, CENTRIFUGE
	2P	7	A	8	2P	
CONV, MAINT. & EXT.	20	9	B	10	20	MCC ROOM LIGHTS
	2P	11	C	12	15	MEZZANINE RECEPT.
1ST FLOOR RECEPT.	20	13	A	14	20	1ST FLOOR RECEPT.
2ND FLOOR RECEPT.	20	15	B	16	20	2ND FLOOR RECEPT.
WATER COOLER	15	17	C	18	20	SLUDGE FIT, CENT. #1
CUH-1	15	19	A	20	20	SLUDGE FIT, CENT. #2
WETTING UNIT SOLENOID VALVES	20	21	B	22	20	SLUDGE FIT, CENT. #3
ALARM HORN	20	23	C	24	20	CENTRATE FIT
LIGHTING CONTROL	20	25	A	26	20	SLUDGE FEED TANK LEVEL
ICP-DC POWER SUPPLY	20	27	B	28	20	NORTH BIN LEVEL
HOPPER & STAIR LIGHTING	20	29	C	30	20	SOUTH BIN LEVEL
UNIT HEATERS	20	31	A	32	20	UNIT HEATERS
RESTROOM EXHAUST & DAMPERS	20	33	B	34	20	POLY ROOM EXHAUSTER
COMPOSITE SAMPLER	20	35	C	36	20	AREA LIGHTING
SPARE	20	37	A	38	2P	
SPARE	20	39	B	40	20	SPARE
SPARE	20	41	C	42	20	SPARE
125A MCB		N		G		

PNL BD P31
120/208V 3ø 4W

DESCRIPTION	A	No	ø	No	A	DESCRIPTION
AFD #1	20	1	A	2	20	AFD #2
	2P	3	B	4	2P	
AFD #3	20	5	C	6	20	AFD #4
	2P	7	A	8	2P	
PRE #3	20	9	B	10	20	EF #1
BUILDING HEATING BOILER	20	11	C	12	20	CHLORINE EVAP. H.W. BOILER
HOPPER LOOP DETECTOR	20	13	A	14	20	RESTROOM HOT WATER HEATER
CHEMISORBANT	20	15	B	16	20	MAKE-UP AIR HEATERS △1
SPARE	20	17	C	18	20	SPARE
SPARE	20	19	A	20	20	SPARE
SPARE	20	21	B	22	20	SPARE
SPACE		23	C	24		SPACE
SPACE		25	A	26		SPACE
SPACE		27	B	28		SPACE
SPACE		29	C	30		SPACE
SPACE		31	A	32		SPACE
SPACE		33	B	34		SPACE
SPACE		35	C	36		SPACE
SPACE		37	A	38		SPACE
SPACE		39	B	40		SPACE
SPACE		41	C	42		SPACE
50A MCB		N		G		

NOTES

1. PUSHBUTTON SPECIFICATION 16956.
2. TWO POSITION SELECTOR SWITCH. SPECIFICATION SECTION 16956.
3. THREE POSITION SELECTOR SWITCH. SPECIFICATION SECTION 16956
4. 24½ x 24½ x 12⅛ CONTROL ENCLOSURE, NEMA 4X WITH BACK PANEL 21" x 21" ROBROY INDUSTRIES CAT # N242410HWT OR ENGINEER APPROVED EQUAL.
5. 20½ x 16⅝ x 12⅛ CONTROL ENCLOSURE, NEMA 4X WITH BACK PANEL 17" x 13" ROBROY INDUSTRIES CAT # N20161 0HWT OR ENGINEER APPROVED EQUAL.
6. 30 3/16 x 20 3/8 x 10⅛ CONTROL ENCLOSURE, NEMA 4X WITH BACK PANEL 27" x 17" ROBROY INDUSTRIES CAT # N30208HWT OR ENGINEER APPROVED EQUAL.

RECORD DRAWING
DATE: AUG. 1988
DRAFTED BY: MCA
THESE RECORD DRAWINGS HAVE BEEN PREPARED, IN PART, ON THE BASIS OF INFORMATION COMPILED AND FURNISHED BY OTHERS. THE ENGINEER WILL NOT BE RESPONSIBLE FOR ANY ERRORS OR OMISSIONS WHICH HAVE BEEN INCORPORATED INTO THIS DOCUMENT AS A RESULT.

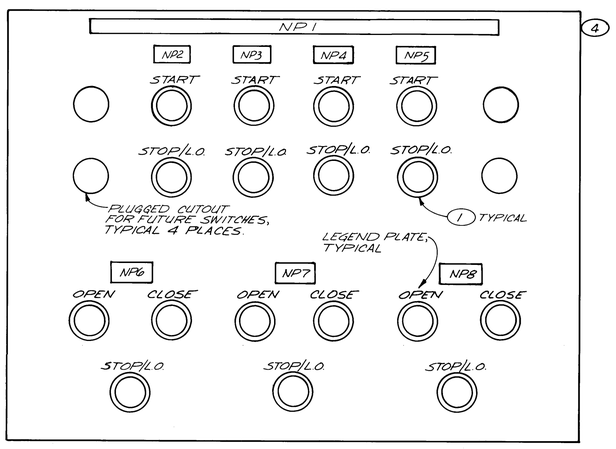

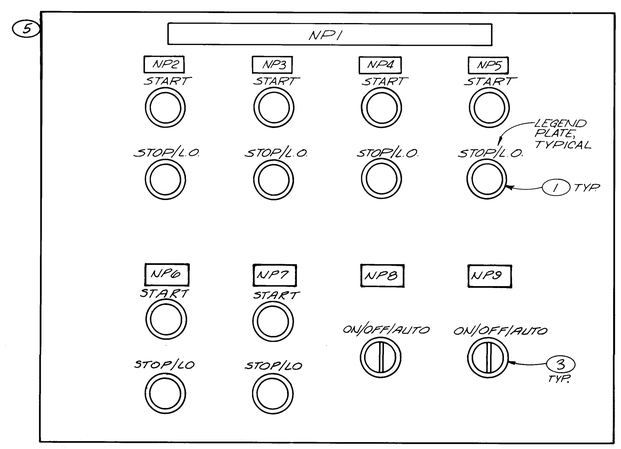

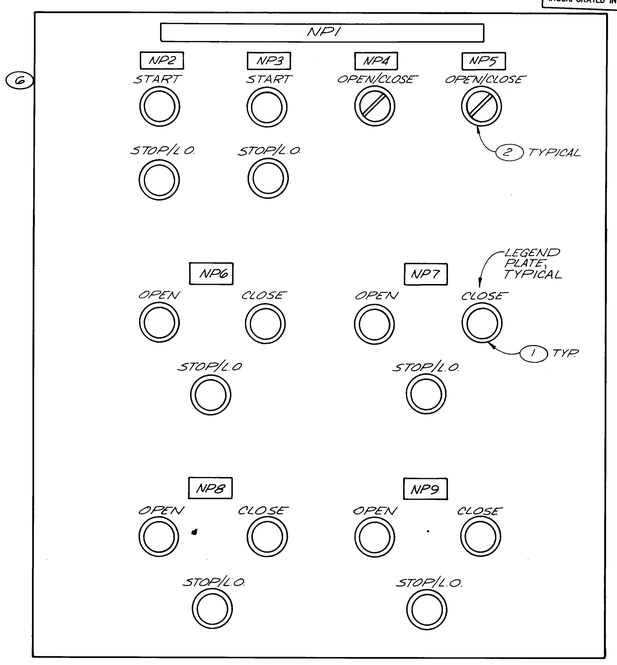

TAG No.	NAMEPLATE	ENGRAVING	LETTER SIZE
—	NP1	POLYMER FEED LOCAL CONTROL PANEL (PFCP)	3/8"
HS-3901A	NP2	POLYMER FEED PUMP Nº 1	1/8"
HS-3902A	NP3	POLYMER FEED PUMP Nº 2	1/8"
HS-3903A	NP4	POLYMER FEED PUMP Nº 3	1/8"
HS-3904A	NP5	POLYMER FEED PUMP Nº 4	1/8"
HS-3911A	NP6	DILUTION WATER VALVE Nº 1	1/8"
HS-3912A	NP7	DILUTION WATER VALVE Nº 2	1/8"
HS-3913A	NP8	DILUTION WATER VALVE Nº 3	1/8"

TAG No.	NAMEPLATE	ENGRAVING	LETTER SIZE
—	NP1	DRY FEEDER LOCAL CONTROL PANEL (FLCP)	3/8"
HS-3921D	NP2	BLOWER Nº 1	1/8"
HS-3922D	NP3	BLOWER Nº 2	1/8"
HS-3921A	NP4	SCREW FEEDER Nº 1	1/8"
HS-3922A	NP5	SCREW FEEDER Nº 2	1/8"
HS-3921J	NP6	DUST COLLECTOR Nº 1	1/8"
HS-3922J	NP7	DUST COLLECTOR Nº 2	1/8"
HS-3921N	NP8	VIBRATOR NO. 1	1/8"
HS-3922N	NP9	VIBRATOR NO. 2	1/8"

TAG No.	NAMEPLATE	ENGRAVING	LETTER SIZE
—	NP1	MIXING TANK LOCAL CONTROL PANEL (MTCP)	3/8"
HS-3931D	NP2	MIXER Nº 1	1/8"
HS-3932D	NP3	MIXER Nº 2	1/8"
HS-3921G	NP4	WETTING UNIT SOLENOID VALVE Nº 1	1/8"
HS-3922G	NP5	WETTING UNIT SOLENOID VALVE Nº 2	1/8"
HS-3931A	NP6	TANK FILL VALVE Nº 1	1/8"
HS-3932A	NP7	TANK FILL VALVE Nº 2	1/8"
HS-3931G	NP8	POLYMER OUTLET VALVE Nº 1	1/8"
HS-3932G	NP9	POLYMER OUTLET VALVE Nº 2	1/8"

STEVEN E. SORENSON NEW MEXICO 6570 REGISTERED PROFESSIONAL ENGINEER

1 2 3 4 5 6 7 8 9 10 11 12 13 14 15 16 17 18 19 20 21 22 23 24 25 26 27 28 29
2 6 3 6 9 4 1 0 5 6 8

NO.	DATE	REVISIONS	APPROVED
1	7-23-85	PP31 CIRCUIT 16	

DESIGNED SS
DRAWN STAFF
CHECKED
APPROVED
APPROVED
DATE 5-85

MOLZEN-CORBIN
STANLEY CONSULTANTS
A JOINT VENTURE

NONE
GRAPHIC SCALE

CITY OF ALBUQUERQUE, NEW MEXICO
SOLIDS HANDLING FACILITIES
PHASE II B-3, CONTRACT 1

INTERIM SLUDGE DEWATERING FACILITIES
PANELBOARDS, PANEL DETAILS

M-C NO. 832221
E-14
105 of 112
SC NO.

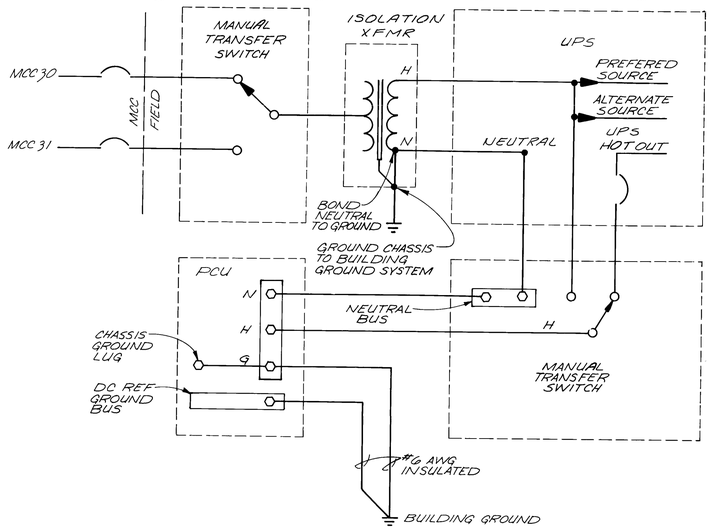

POWER & GROUNDING DETAIL
PCU-12 & ASSOCIATED EQUIMPMENT
NO SCALE

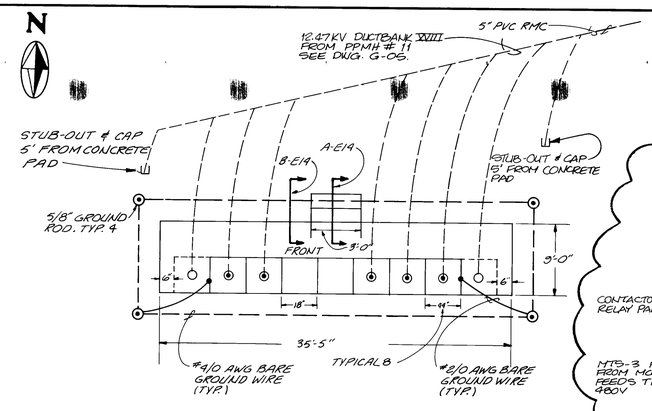

5th AVE. SWITCHING STATION
NO SCALE

FOR LOCATION, SEE DRAWING NO. G-05.

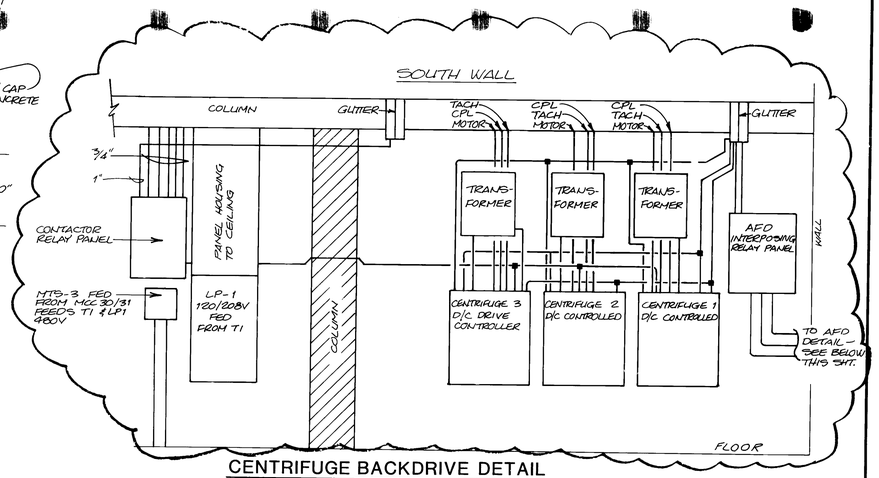

CENTRIFUGE BACKDRIVE DETAIL
NO SCALE

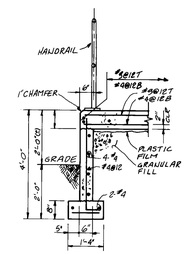

(B-E19) SECTION
E-19 NO SCALE

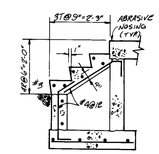

(A-E19) SECTION
E-19 NO SCALE

NOTES

1. 24" X 20" X 10" NEMA TYPE 12 ENCLOSURE WITH BACK PANEL 21" X 17" HOFFMAN BULLETIN A-12 CAT. NO. A-242010LP WITH A-24P20 OR ENGINEER APPROVED EQUAL.
2. 20 1/4" X 16 5/8" X 7 7/8" CONTROL ENCLOSURE, NEMA 4X WITH BACK PANEL 17" X 13" ROBROY CAT. NO. N20166 OR ENGINEER APPROVED EQUAL

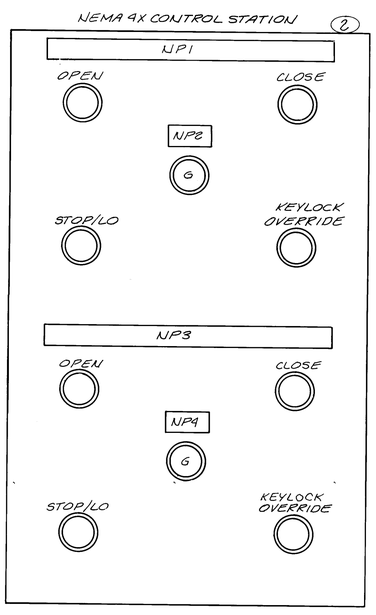

NAMEPLATE	ENGRAVING	LETTER SIZE
NP1	NORTH BIN GATE CONTROLS FV-3963	1/2"
NP2	BIN READY NL-3963C	1/8"
NP3	SOUTH BIN GATE CONTROLS FV-3964	1/2"
NP4	BIN READY NL-3964C	1/8"

BIN GATE CONTROL PANEL
NO SCALE

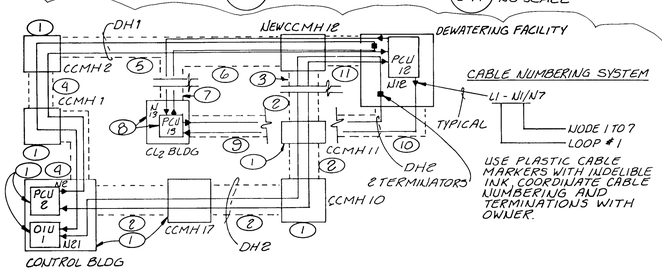

NOTES

1. EXISTING
2. DUCT BANK: EXISTING. DATA HIGHWAY 2 CABLES (DH2): THIS CONTRACT.
3. DUCT BANK AND DH2: THIS CONTRACT.
4. DUCT BANK: EXISTING. DH1: LIQUID SYSTEMS RENOVATION (LSR) CONTRACT.
5. DUCT BANK: THIS CONTRACT. DH1: LSR CONTRACT.
6. DUCT BANK: THIS CONTRACT. OIU1 TO PCU12 PORTION OF DH1: LSR CONTRACT.
7. DUCT BANK AND PCU12 TO PCU13 PORTION OF DH1: LSR CONTRACT.
8. LSR CONTRACT.
9. DUCT BANK AND PCU12 TO PCU13 PORTION OF DH2: LSR CONTRACT.
10. DUCT BANK: THIS CONTRACT. PCU12 TO PCU13 PORTION OF DH2: LSR CONTRACT.
11. DUCT BANK AND DH2: THIS CONTRACT. DH1 CABLE: LSR CONTRACT. INSTALLATION OF DH1: THIS CONTRACT. DH1 & DH2 IN SAME CONDUIT.

GENERAL NOTES

1. EACH DH=2 COAXIAL CABLE, SECTION 16120.
2. NO SPLICES ALLOWED.
3. ALL TERMINATIONS AND INSTALLATIONS TO DH: THIS CONTRACT. CONNECTION TO PCU/OIU: OWNER.
4. SHOW CONSEQUENTIAL CHANGES TO DUCT BANK FILL INFORMATION ON RECORD DRAWINGS.
5. BOTH HIGHWAYS SHALL BE CONNECTED TO PCU 2(EXISTING) OIU 1(EXISTING), PCU 12, AND PCU 13(NOT IN THIS CONTRACT) ON THE SAME DAY. COORDINATE CLOSELY WITH CITY AND WITH THE CONTRACTOR FURNISHING PCU 13 TO ENSURE TIMELY AND SMOOTH INSTALLATION AND CONNECTION OF HIGHWAYS.

DATA HIGHWAY LOOP CONNECTION DETAIL
NO SCALE

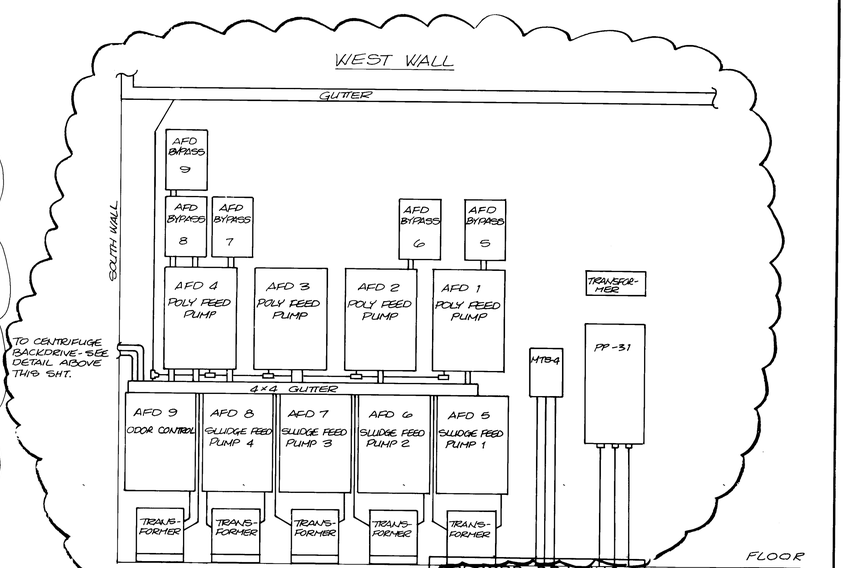

AFD DETAIL
NO SCALE

RECORD DRAWING

DATE:	DRAFTED BY:
AUG. 1988	MCA

THESE RECORD DRAWINGS HAVE BEEN PREPARED, IN PART, ON THE BASIS OF INFORMATION COMPILED AND FURNISHED BY OTHERS. THE ENGINEER WILL NOT BE RESPONSIBLE FOR ANY ERRORS OR OMISSIONS WHICH HAVE BEEN INCORPORATED INTO THIS DOCUMENT AS A RESULT.

STEVEN E. SORENSON — NEW MEXICO — 8570 — 5-85 — REGISTERED PROFESSIONAL ENGINEER

1 2 3 4 5 6 7 8 9 10 11 12 13 14 15 16 17 18 19 20 21 22 23 24 25 26 27 28 29
26 3 6 9 4 1 0 6 8 8

NO.	DATE	REVISIONS	APPROVED
1	7-24-85	DATA HIGHWAY DETAIL	

DESIGNED SS
DRAWN STAFF
CHECKED
APPROVED
APPROVED
DATE 5-85

MOLZEN-CORBIN
STANLEY CONSULTANTS
A JOINT VENTURE

AS SHOWN
GRAPHIC SCALE

CITY OF ALBUQUERQUE, NEW MEXICO
SOLIDS HANDLING FACILITIES
PHASE II B-3, CONTRACT 1

INTERIM SLUDGE DEWATERING FACILITIES
ELECTRICAL DETAILS

M-C NO. 832221
E-15
106 of 112
SC NO.

MOTOR CONTROL CENTER SCHEDULE #30

MCC & UNIT NUMBER	REF NUMBER	UNIT NAMEPLATE FIRST LINE	SECOND LINE	THIRD LINE	HP OR KVA	FLA	STARTER SIZE	STARTER TYPE	CB/MCP FRAME	CB/MCP TRIP	AUX MS CONTACTS N.O.	AUX MS CONTACTS N.C.	SCHEM NO.		NOTES
1A		SPACE													
1B	E-21	KWH	METERING												1
1C	E-05	INCOMING	FEEDER												
2A	E-06	CENTRIFUGE	MAINDRIVE #1		150	180	5	*	400	250	7	2	17		5
3AL	E-06	TANK FILL	WATERVALVE #1	FEEDER	1	1.8	—	—	150	15	—	—	9		
3AR	E-06	TRANSFORMER	FEEDER TO	U.P.S.					150	15	—	—	—		
3BL	E-06	FLUSHING	WATER VALVE #1	FEEDER	1	1.8	—	—	150	15	—	—	10		
3BR	E-05	DILUTION	WATER VALVE #2	FEEDER	1	1.8	—	—	150	15	—	—	9		
3CL	E-05	SLUDGE	FEED PUMP #1	FEEDER	7 1/2	11	—	—	150	20	—	—	7		
3CR	E-06	CENTRIFUGE	BACKDRIVE #1	FEEDER	25	11	—	—	150	40	—	—	19		
3DL	E-05	SLUDGE	FEED PUMP #2	FEEDER	7 1/2	11	—	—	150	20	—	—	7		
3DR	E-06	CENTRIFUGE	BACKDRIVE #2	FEEDER	25	-15	—	—	150	40	—	—	19		
3E	E-06	LUBE	OIL	PUMP #1	1/4	1	1	FVNR	3	8	5	—	18		
3F	E-06	SCREWFEEDER #1			1/2	1	1	FVNR	3	8	6		1		
4A	E-06	CENTRIFUGE	MAINDRIVE #2		150	180	5	*	400	250	7	2	17		5
5A	E-06	POWER ROOF	EXHAUSTER #1		1	1.8	1	FVNR	3	18	5	—	12		
5BL	E-06	FLUSHING	WATER VALVE #2	FEEDER	1	1.8	—	—	150	15	—	—	10		
5BR	E-05	DILUTION	WATER VALVE #2	FEEDER	1	1.8	—	—	150	15	—	—	9		
5C	E-05	POLYMER	MIXER #1		2	3.4	1	FVNR	7	30	5	—	11		
5DL	E-05	TRANSFORMER	FEEDER TO	LTG. PNL.	45KVA	54	—	—	150	70	—	—			
5DR	E-05	TRANSFORMER	FEEDER TO POLY.	FEED PUMPS	15KVA	18	—	—	150	25	—	—			
5E	E-06	BLOWER #1			2	3.4	1	FVNR	7	30	5	—	13		
5F	E-06	LUBE	OIL	PUMP #2	1/4	1	1	FVNR	3	8	5	—	18		4
6AL	E-05	NORTH	BIN GATE	FEEDER	1 1/2	2.6	1	FVNR	3	8	—	—	15		
6AR		POLYMER	OUTLET VALVE	# FEEDER	1	1.8	—	—	150	15	—	—	9		
6B	E-05	CENTRATE	SAMPLE	PUMP #1	1/3	1	1	FVNR	3	8	1	—	2		
6C	E-06	DUST	COLLECTOR #1		1/2	1	1	FVNR	3	8	5	—	13		
6D	E-05	CENTRATE	SAMPLE	PUMP #2	1/3	1	1	FVNR	3	8	1	—	2		
6E	E-06	DISTRIBUTION	CONVEYOR		3.4	1.4	1	FVNR	3	15	6	2	20		
6F		SPACE													
7A	E-06	CE	HOT WATER	PUMP #1	1 1/2	2.6	1	FVNR	3	18	3	—	25		
7B	E-06	MANHOLE PUMP	FEEDER						20CB						
7C		SPARE							20CB						
7D	E-07	INTAKE	FAN #1		3	4.8	1	FVNR	7	42	5	—	12		
7E															
8A	E-18	MASTER TERMINAL	& INTERPOSING	RELAYS										FULL SECTION	

* REDUCED VOLTAGE WYE - DELTA.

GENERAL NOTES

1. NAMEPLATE NOT REQUIRED FOR "SPACE". UNLESS NOTED OTHERWISE, "SPACE" SHALL BE A 12" SPACE SUITABLE FOR THE FUTURE INSTALLATION OF A SIZE 2 STARTER OR A 60A FEEDER.
2. HORSEPOWERS, STARTER SIZES, SWITCH AMPACITY, AND FUSE SIZES ARE BASED ON PLANT EQUIPMENT AS DESIGNED. ADJUST TO MATCH EQUIPMENT ACTUALLY SUPPLIED.
3. FUSE SIZES ARE BASED ON THE RECOMMENDATIONS OF THE BUSSMAN COMPANY FOR THEIR FRSR FUSE. SUBMITTALS OF MCC SCHEDULES SHALL SHOW THE RECOMMENDED FUSE SIZES FOR THE FUSES ACTUALLY SUPPLIED.
4. FURNISH ACTUAL HP OF EACH MOTOR TO MCC MANUFACTURER BEFORE MCC SUBMITTALS ARE PREPARED. MCC MANUFACTURER FURNISH EQUIPMENT TO MATCH. SIZE 1 IS MINIMUM STARTER SIZE.

NOTES

1. CT'S, PT'S, KWH METER, KW TRANSDUCER, VOLTMETER SWITCH(VS), VOLTMETER(VM), AMMETER SWITCH(AS), AMMETER(AM).
2. SIZE AS REQUIRED FOR EQUIPMENT SUPPLIED.
3. PROVIDE FUSES FOR EQUIPMENT SUPPLIED.
4. OVERSIZED CONTROL TRANSFORMER.
5. PROVIDE 150:5 CT ON PHASE C. SEE SCHEMATIC.

REFERENCE MCC DRAWING D-2216-1-2

RECORD DRAWING
DATE: AUG. 1988
DRAFTED BY: MCA
THESE RECORD DRAWINGS HAVE BEEN PREPARED, IN PART, ON THE BASIS OF INFORMATION COMPILED AND FURNISHED BY OTHERS. THE ENGINEER WILL NOT BE RESPONSIBLE FOR ANY ERRORS OR OMISSIONS WHICH HAVE BEEN INCORPORATED INTO THIS DOCUMENT AS A RESULT.

STEVEN E. SORENSON NEW MEXICO 6570 REGISTERED PROFESSIONAL ENGINEER

26 | 3 6 9 4 1 0 7 8 8

NO.	DATE	REVISIONS	APPROVED
1	7-23-85	CUBICLE 7A	

DESIGNED SS
DRAWN STAFF
CHECKED
APPROVED
APPROVED
DATE 5-85

MOLZEN-CORBIN
STANLEY CONSULTANTS
A JOINT VENTURE

NONE
GRAPHIC SCALE

CITY OF ALBUQUERQUE, NEW MEXICO
SOLIDS HANDLING FACILITIES
PHASE II B-8 CONTRACT

INTERIM SLUDGE DEWATERING FACILITIES
MCC # 30 SCHEDULE

M-C NO. 8928-11
E-1
CO. NO.

82624

MOTOR CONTROL CENTER SCHEDULE # 31

MCC & UNIT NUMBER	REF NUMBER	UNIT NAMEPLATE FIRST LINE	SECOND LINE	THIRD LINE	HP OR KVA	FLA	STARTER SIZE	STARTER TYPE	CB/MCP FRAME	CB/MCP TRIP	AUX MS CONTACTS N.O.	AUX MS CONTACTS N.C.	SCHEM NO.		NOTES
1A		SPACE													
1B	E-21	KWH	METERING												1
1C	E-05	INCOMING	FEEDER												
2A	E-06	CENTRIFUGE	MAIN DRIVE #3		150	180	5	*	400	250	7	2	17		5
3A		SPACE													
3B	E-06	DUST	COLLECTOR #2		1/2	1	1	FVNR	3	8	5	–	13		
3C	E-06	LUBE, OIL	PUMP #3		1/2	1	1	FVNR	3	8	5	–	18		
3DL	E-05	SLUDGE	FEED PUMP #3	FEEDER	7 1/2	11	–	–	150	20	–	–	7		
3DR	E-06	CENTRIFUGE	BACK DRIVE #3	FEEDER	25	-15	—	—	150	40	–	–	19		
3EL	E-05	SLUDGE	FEED PUMP #4	FEEDER	7 1/2	11	–	–	150	20	–	–	7		
3ER	E-05	SLUDGE	FEED VALVE	FEEDER	1	1.8	–	–	150	15	–	–	10		
3FL	E-05	SOUTH	BIN GATE	FEEDER	1 1/2	2.6	–	–	150	15	–	–	15		
3FR		POLYMER	OUTLET VALVE	#1 FEEDER	1	1.8	–	–	150	15	–	–	9		
4A	E-05	POLYMER	MIXER #2		2	3.4	1	FVNR	7	30	5	–	11		
4BL	E-06	TRANSFORMER	FEEDER TO	U.P.S.					150	15					
4BR	E-05	ODOR CONTROL	BLOWER #1	FEEDER	5	7.6	–	–	150	15	–	–	6		
4CL	E-05	TRANSFORMER	FEEDER TO	LTG. PNL.	45KVA	54	–	–	150	70	–	–			
4CR	E-05	TRANSFORMER	FEEDER TO	POLY. FEED PUMP	15KVA	18	–	–	150	25	–	–			
4D	E-05	CENTRATE	SAMPLE	PUMP #3	1/3	1	1	FVNR	3	8	1	–	2		
4E	E-06	INCLINED	CONVEYOR		2	3.4	1	FVR	7	30	6	2	10		
4F		SPACE													
5A	E-06	SCREW FEEDER	#2		1/2	1	1	FVNR	3	8	6	–	1		
5BL	E-06	HOT WATER	WASH UNIT	FEEDER	7 1/2	11	–	–	150	15	–	–			
5BR		SPACE													
5C	E-05	ODOR CONTROL	BLOWER #2		5	7.6	1	FVNR	15	68	5	–	12		
5D	E-06	BLOWER #2			2	3.4	1	FVNR	7	30	5	–	13		
5E	E-06	HOT WATER	CIRCULATION	PUMP #2	3	4.8	1	FVNR	7	42	5	–	14		4
5FL	E-06	BRIDGE	CRANE	FEEDER	25	34	–	–	150	40	–	–			
5FR	E-07	AIR CONDITIONING	UNIT	FEEDER	3/4	1.4	–	–	150	20	–	–	22		

MCC & UNIT NUMBER	REF NUMBER	UNIT NAMEPLATE FIRST LINE	SECOND LINE	THIRD LINE	HP OR KVA	FLA	STARTER SIZE	STARTER TYPE	CB/MCP FRAME	CB/MCP TRIP	AUX MS CONTACTS N.O.	AUX MS CONTACTS N.C.	SCHEM NO.		NOTES
6A		SPACE													
6B	E-06	FLUSHING	WATER VALVE #3	FEEDER	1	1.8	–	–	150	15			10		
6C	E-05	DILUTION	WATER VALVE #3	FEEDER	1	1.8	–	–	150	15			9		
6CL	E-05	ROLL-UP	DOOR	FEEDER	1/2	2.6	–	–	150	15			–		
6CR	E-05	TANK FILL	VALVE #2	FEEDER	1	1.8	–	–	150	15			9		
6D	E-07	INTAKE	FAN #2		3	4.8	1	FVNR	7	42	5	–	12		
6E	E-06	POWER ROOF	EXHAUSTER	#2	1	1.8	1	FVNR	3	18	5	–	12		
6F		INCLINED CONVEYOR	SOFT START	MODULE											
7A	E-18	MASTER TERMINALS	& INTERPOSING	RELAYS										FULL SECTION	

* REDUCED VOLTAGE WYE - DELTA.

GENERAL NOTES

1. NAMEPLATE NOT REQUIRED FOR "SPACE". UNLESS NOTED OTHERWISE, "SPACE" SHALL BE A 12" SPACE SUITABLE FOR THE FUTURE INSTALLATION OF A SIZE 2 STARTER OR A 60A FEEDER.
2. HORSEPOWERS, STARTER SIZES, SWITCH AMPACITY, AND FUSE SIZES ARE BASED ON PLANT EQUIPMENT AS DESIGNED. ADJUST TO MATCH EQUIPMENT ACTUALLY SUPPLIED.
3. FUSE SIZES ARE BASED ON THE RECOMMENDATIONS OF THE BUSSMAN COMPANY FOR THEIR FRSR FUSE. SUBMITTALS OF MCC SCHEDULES SHALL SHOW THE RECOMMENDED FUSE SIZES FOR THE FUSES ACTUALLY SUPPLIED.
4. FURNISH ACTUAL HP OF EACH MOTOR TO MCC MANUFACTURER BEFORE MCC SUBMITTALS ARE PREPARED. MCC MANUFACTURER FURNISH EQUIPMENT TO MATCH. SIZE 1 IS MINIMUM STARTER SIZE.

NOTES

1. CT'S, PT'S, KWH METER, KW TRANSDUCER, VOLTMETER SWITCH(VS), VOLTMETER(VM), AMMETER SWITCH(AS), AMMETER(AM).
2. SIZE AS REQUIRED FOR EQUIPMENT SUPPLIED.
3. PROVIDE FUSES FOR EQUIPMENT SUPPLIED.
4. OVERSIZED CONTROL TRANSFORMER.
5. PROVIDE 150:5 CT ON PHASE C. SEE SCHEMATIC.

REFERENCE MCC DRAWING D-2216-2-2

RECORD DRAWING
DATE: AUG. 1988
DRAFTED BY: MCA
THESE RECORD DRAWINGS HAVE BEEN PREPARED, IN PART, ON THE BASIS OF INFORMATION COMPILED AND FURNISHED BY OTHERS. THE ENGINEER WILL NOT BE RESPONSIBLE FOR ANY ERRORS OR OMISSIONS WHICH HAVE BEEN INCORPORATED INTO THIS DOCUMENT AS A RESULT.

STEVEN E. SORENSON NEW MEXICO 6570 REGISTERED PROFESSIONAL ENGINEER

1 2 3 4 5 6 7 8 9 10 11 12 13 14 15 16 17 18 19 20 21 22 23 24 25 26 27 28 29
26 3694 1088

NO.	DATE	REVISIONS	APPROVED

DESIGNED SS
DRAWN STAFF
CHECKED
APPROVED
APPROVED
DATE 5-85

MOLZEN-CORBIN
STANLEY CONSULTANTS
A JOINT VENTURE

NONE
GRAPHIC SCALE

CITY OF ALBUQUERQUE, NEW MEXICO
SOLIDS HANDLING FACILITIES
PHASE II B-3, CONTRACT 1

INTERIM SLUDGE DEWATERING FACILITIES
MCC # 31 SCHEDULE

M-C NO. 832221
E-17
108 OF 112
SC NO.

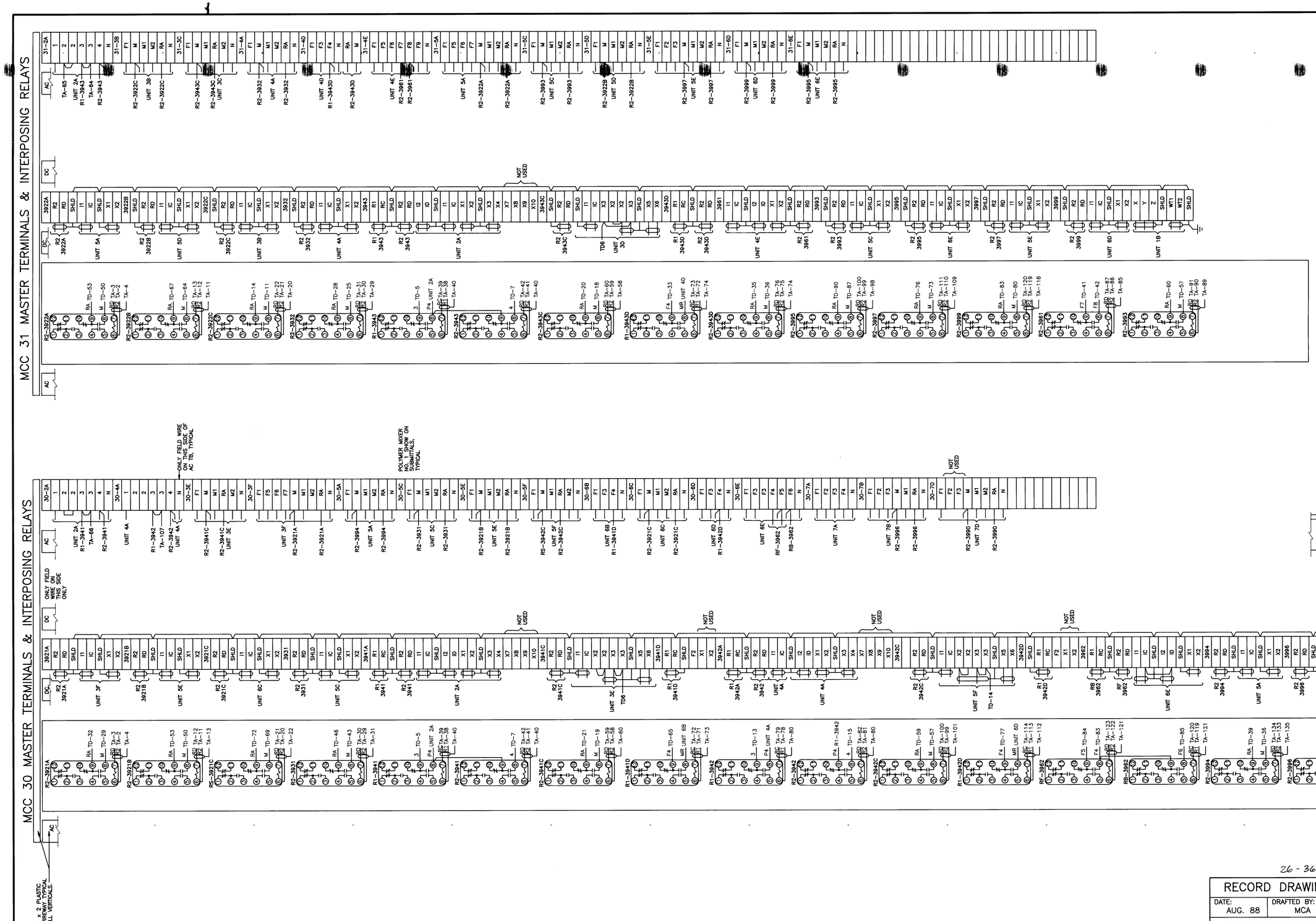

1. WIRING NOT SHOWN.
2. MAKE EACH TB AND VERTICAL WIREWAY FULL HEIGHT OF COMPARTMENT.
3. KEEP AC AND DC WIRING SEPARATED IN MASTER COMPARTMENT, AND THROUGHOUT THE MCC.
4. DRAWING IS MAINLY TO ILLUSTRATE OVERALL REQUIREMENTS. COMPLETE, DETAILED SUBMITTALS REQUIRED. GROUP ALL MASTER TERMINALS IN THIS SECTION. NONE REQUIRED OR ALLOWED IN ANY OTHER SECTIONS.

REFERENCE MCC DRAWINGS 2D31455 SHEETS 33 AND 35

26-3694-109-88

RECORD DRAWING

DATE:	DRAFTED BY:
AUG. 88	MCA

THESE RECORD DRAWINGS HAVE BEEN PREPARED, IN PART, ON THE BASIS OF INFORMATION COMPILED AND FURNISHED BY OTHERS. THE ENGINEER WILL NOT BE RESPONSIBLE FOR ANY ERRORS OR OMISSIONS WHICH HAVE BEEN INCORPORATED INTO THIS DOCUMENT AS A RESULT.

STEVEN E SORENSON NEW MEXICO 6570 REGISTERED PROFESSIONAL ENGINEER

NO.	DATE	REVISIONS	APPROVED
	10/88	RECORD DRAWING	

DESIGNED SS
DRAWN STAFF
CHECKED
APPROVED SES
APPROVED
DATE MAY 1985

MOLZEN-CORBIN
STANLEY CONSULTANTS
A JOINT VENTURE

NONE
GRAPHIC SCALE

CITY OF ALBUQUERQUE, NEW MEXICO
SOLIDS HANDLING FACILITIES
PHASE II B-3, CONTRACT 1

INTERIM SLUDGE DEWATERING FACILITIES
MCC TERMINAL BOARD

M-C NO. 832221
E-18
109 OF 112
SC NO.

82624

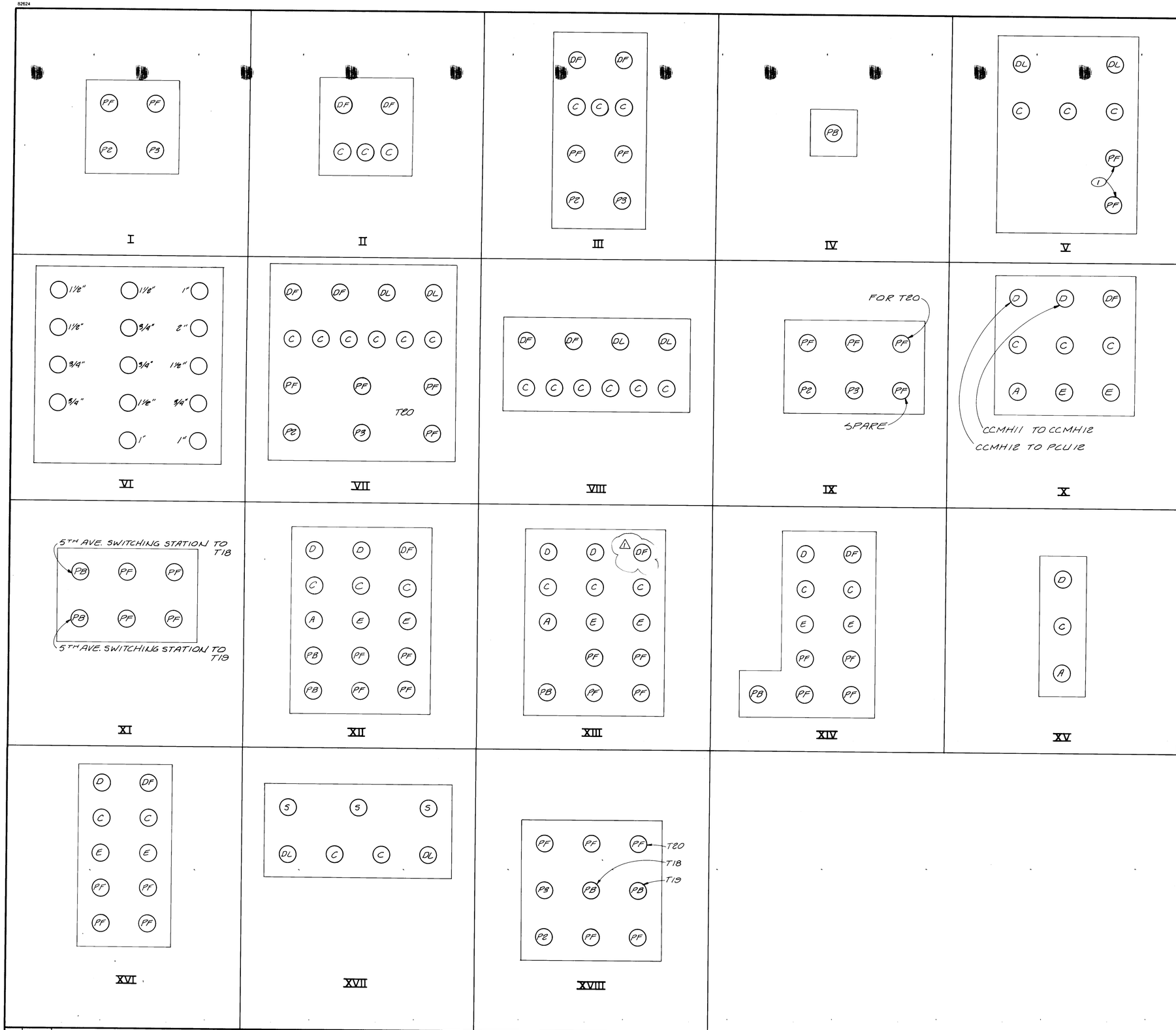

NOTES

1. LEAVE 24" OF CONDUIT AND REBAR CLEAR OF CONCRETE AND CAP FOR FUTURE EAST END EXTENSION.

GENERAL NOTES

1. FOR LOCATIONS OF DUCT BANKS, SEE SHEETS G-04, G-05, G-06.

LETTER DESIGNATION	CONDUIT SIZE & TYPE	TYPE OF CIRCUIT
A	1" PVC	ALARM FLOAT (1)
E	2" PVC	FUTURE ELECTRICAL (2)
C	2" PVC	CONTROL & INSTR. (2)
D	4" RMC	DATA HIGHWAY (3)
DL	2" RMC	DATA HIGHWAY LOOP (2) △
DF	4" RMC	DATA HIGHWAY FUTURE (2)
P2	5" PVC	PLANT PRIMARY - 2 (4)
P3	5" PVC	PLANT PRIMARY - 3 (4)
PF	5" PVC	FUTURE PRIMARY (2)
PB	5" PVC	BRANCH PRIMARY (5)
S	3" PVC	SECONDARY POWER (2)

(1) 2 - TWISTED SHIELDED #16 PAIRS.
(2) CONDUIT: THIS CONTRACT. CABLE: NOT THIS CONTRACT.
(3) 2 COAXIAL CABLES 16120 FOR D.H.1.
(4) 3 - 500 MCM, 15KV AND 1 - #1/0 GROUND.
(5) 3 #2 , 15KV AND 1 - #2 GROUND. △

DUCT BANK IDENTIFICATION SCHEDULE

NO SCALE

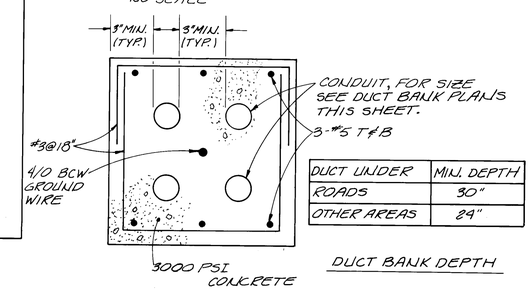

DUCT UNDER	MIN. DEPTH
ROADS	30"
OTHER AREAS	24"

DUCT BANK DEPTH

DUCT BANK DETAIL

NO SCALE

RECORD DRAWING

DATE:	DRAFTED BY:
AUG. 1988	MCA

THESE RECORD DRAWINGS HAVE BEEN PREPARED, IN PART, ON THE BASIS OF INFORMATION COMPILED AND FURNISHED BY OTHERS. THE ENGINEER WILL NOT BE RESPONSIBLE FOR ANY ERRORS OR OMISSIONS WHICH HAVE BEEN INCORPORATED INTO THIS DOCUMENT AS A RESULT.

STEVEN E. SORENSON NEW MEXICO 6570 REGISTERED PROFESSIONAL ENGINEER 5-85

1 2 3 4 5 6 7 8 9 10 11 12 13 14 15 16 17 18 19 20 21 22 23 24 25 26 27 28 29
2 6 3 6 9 4 1 1 0 8 8

NO.	DATE	REVISIONS	APPROVED
△1	7-23-85	DUCT BANK XIII, DUCT BANK IDENTIFICATION SCHEDULE	

DESIGNED SS
DRAWN STAFF
CHECKED
APPROVED
APPROVED
DATE 5-85

MOLZEN-CORBIN
STANLEY CONSULTANTS
A JOINT VENTURE

NONE
GRAPHIC SCALE

CITY OF ALBUQUERQUE, NEW MEXICO
SOLIDS HANDLING FACILITIES
PHASE II B-3, CONTRACT 1

INTERIM SLUDGE DEWATERING FACILITIES
DUCT BANK DETAILS

M-C NO. 832221
E-19
110 of 112
SC NO.

82624

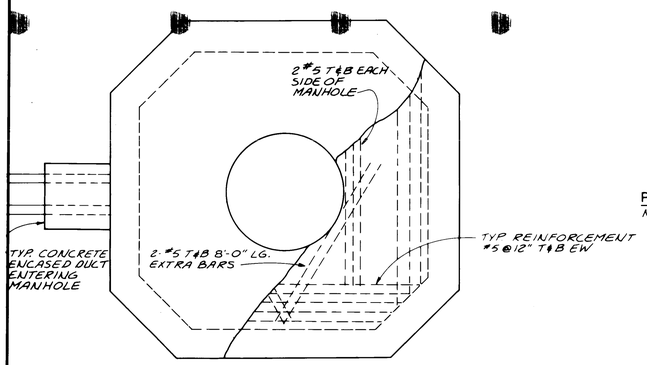

TOP VIEW- TOP SLAB
SCALE 1/2" = 1'-0"

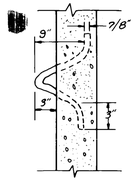

PULLING IRON DETAIL
NO SCALE

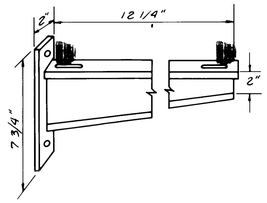

WALL BRACKET DETAIL
NO SCALE

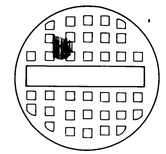

LID DETAIL
NO SCALE

GENERAL NOTES

1. CABLE TRAY TO MOUNTED AT LEAST 3" ABOVE FLOOR LEVEL.
2. CONCRETE ENCASEMENT SHALL BE RED DYE-3000 PSI.
3. PROVIDE ALL COUPLING ADAPTERS, FITTINGS, ELBOWS, SOLVENT, CEMENT, BENDERS, BUSHINGS, BELL ENDS, SPACERS, DUCT PLUGS, TAPE AND MISC. MATERIAL. INSTALL SYSTEM WITH PROPER SPACING AS PER RECOMMENDED BY MANUFACTURER.
4. PROVIDE ALL BOLTS, WASHERS, WALL ANCHORS, AND MISC. MATERIAL. FOR MOUNTING CABLE TRAY TO WALL AS PER MANUFACTURERS RECOMMENDATIONS.
5. CONCRETE PAD DIMENSIONS ARE APPROXIMATE, CONTRACTOR IS RESPONSIBLE FOR ADJUSTING PAD DIMENSIONS TO MATCH EQUIPMENT SUPPLIED.

NOTES

1. HUSKY/BURNDY ALUM. VENTRIB CABLE TRAY TYPE AM OR EQUAL.
2. 1 #3/0 BARE COPPER GROUND WIRE AROUND INSIDE MANHOLE WALL 2" ABOVE FLOOR. CONNECT TO GROUND ROD (4).
3. THERMIT CONNECTION.
4. 5/8" x 10'-0" COPPERWELD GROUND ROD WITH TOP 3" ABOVE MANHOLE FLOOR.
5. PULLING IRON, SEE DETAIL THIS SHEET.
6. HUSKY/BURNDY WALL BRACKET SUPPORT, CAT. NO. WBK 12L OR EQUAL.
7. OUTLINE OF MANHOLE OPENING. FRAME AND COVER TO BE NEENAH FOUNDRY CAT. NO. R-1640 D OR EQUAL.
8. DUCT BANKS AS CALLED FOR IN DRAWINGS. SHOWN THIS SHEET IN SECTION ADJUST POSITION TO MATCH MANHOLE SCHEDULE.
9. FLYGT SUBMERSIBLE WATERTIGHT SWITCH.
10. SUMP PUMP COVER AND FRAME TO BE NEENAH R-4380-21 OR EQUAL.

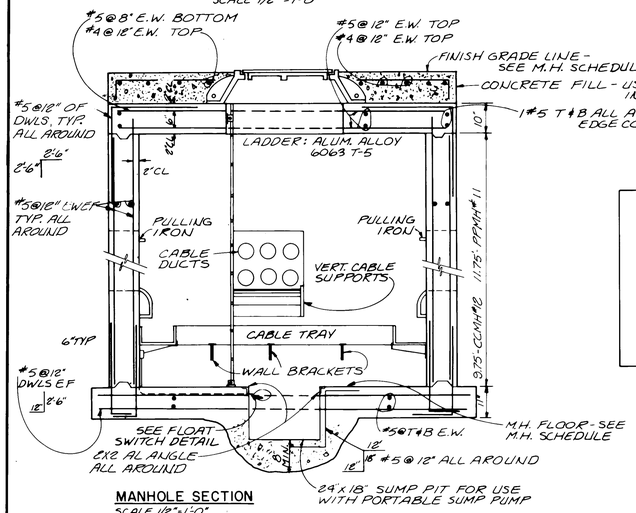

MANHOLE SECTION
SCALE 1/2" = 1'-0"

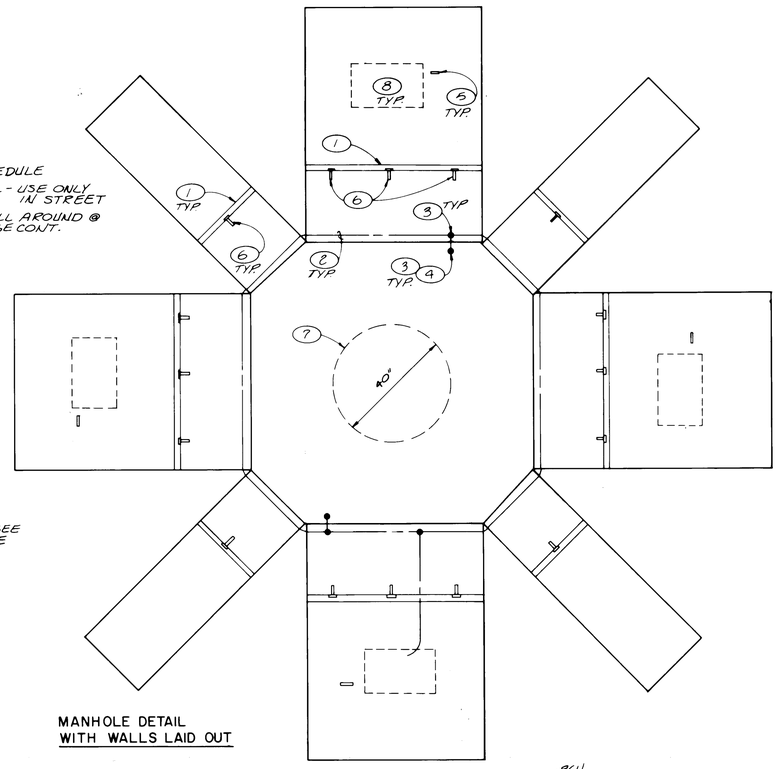

MANHOLE DETAIL
WITH WALLS LAID OUT

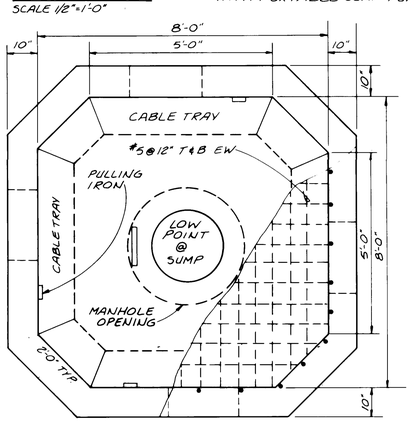

TOP VIEW-BOTTOM SLAB
SCALE 1/2" = 1'-0"

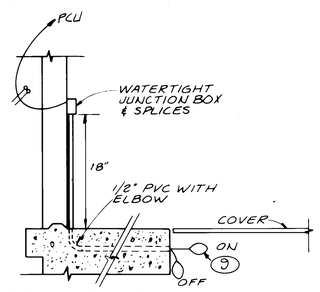

FLOAT SWITCH DETAIL
NO SCALE

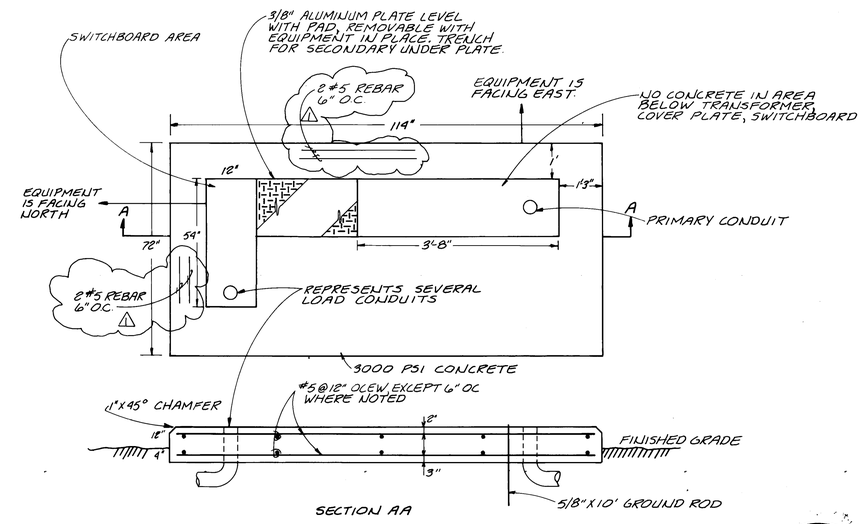

TRANSFORMER PAD DETAIL
NO SCALE

RECORD DRAWING

DATE:	DRAFTED BY:
AUG. 1988	MCA

THESE RECORD DRAWINGS HAVE BEEN PREPARED, IN PART, ON THE BASIS OF INFORMATION COMPILED AND FURNISHED BY OTHERS. THE ENGINEER WILL NOT BE RESPONSIBLE FOR ANY ERRORS OR OMISSIONS WHICH HAVE BEEN INCORPORATED INTO THIS DOCUMENT AS A RESULT.

STEVEN E. SORENSON NEW MEXICO 6570 REGISTERED PROFESSIONAL ENGINEER 5-85

1 2 3 4 5 6 7 8 9 10 11 12 13 14 15 16 17 18 19 20 21 22 23 24 25 26 27 28 29
26 3 6 9 4 1 1 1 1 8

NO.	DATE	REVISIONS	APPROVED
1	7-23-85	TRANSFORMER PAD DETAIL, NOTE TITLES	

DESIGNED SS
DRAWN STAFF
CHECKED
APPROVED
APPROVED
DATE 5-85

MOLZEN-CORBIN
STANLEY CONSULTANTS
A JOINT VENTURE

GRAPHIC SCALE

CITY OF ALBUQUERQUE, NEW MEXICO
SOLIDS HANDLING FACILITIES
PHASE II B- 3, CONTRACT 1

INTERIM SLUDGE DEWATERING FACILITIES
ELECTRICAL MANHOLE AND TRANSFORMER PAD DETAIL

M-C NO. 832221
E-20
111 OF 112
SC NO.

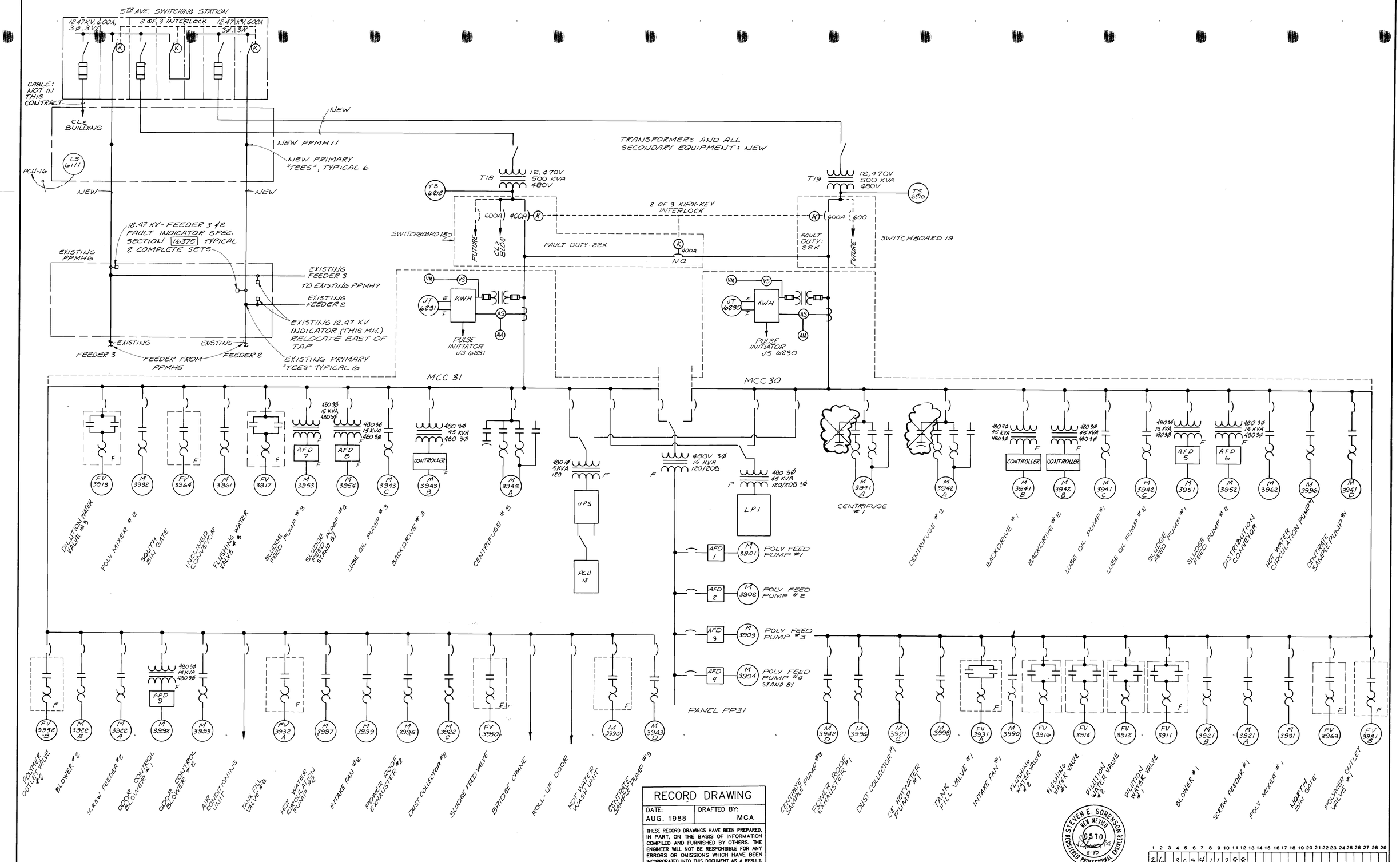

RECORD DRAWING

DATE:	DRAFTED BY:
AUG. 1988	MCA

THESE RECORD DRAWINGS HAVE BEEN PREPARED, IN PART, ON THE BASIS OF INFORMATION COMPILED AND FURNISHED BY OTHERS. THE ENGINEER WILL NOT BE RESPONSIBLE FOR ANY ERRORS OR OMISSIONS WHICH HAVE BEEN INCORPORATED INTO THIS DOCUMENT AS A RESULT.

1 2 3 4 5 6 7 8 9 10 11 12 13 14 15 16 17 18 19 20 21 22 23 24 25 26 27 28 29
2 6 3 6 9 4 1 1 2 9 8

NO.	DATE	REVISIONS	APPROVED

DESIGNED SS
DRAWN STAFF
CHECKED MA
APPROVED MA
APPROVED
DATE 5-85

MOLZEN-CORBIN
STANLEY CONSULTANTS
A JOINT VENTURE

NONE
GRAPHIC SCALE

CITY OF ALBUQUERQUE, NEW MEXICO
SOLIDS HANDLING FACILITIES
PHASE II B-3, CONTRACT 1

INTERIM SLUDGE DEWATERING FACILITIES
ONE - LINE DIAGRAM

M-C NO. 832221
E-21 112 OF 112
SC NO.