CITY OF ALBUQUERQUE
PUBLIC WORKS DEPARTMENT
PROJECT NO. 4344.90

EAST CENTRAL/WEST CENTRAL SALT STORAGE FACILITIES

INDEX OF SHEETS

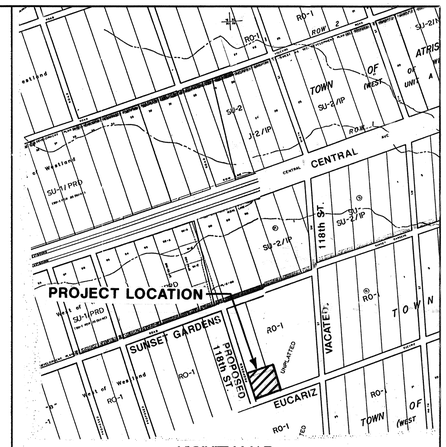

VICINITY MAP
WEST CENTRAL SITE

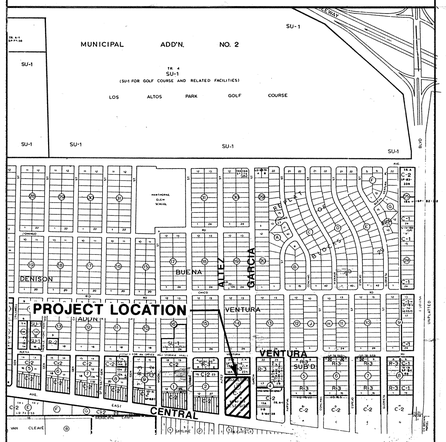

VICINITY MAP
EAST CENTRAL SITE

RECORD SET

David J. Larrow
1-10-95

APPROVAL OF AS BUILT DRAWINGS
CHIEF CONSTRUCTION ENGINEER
DATE

REV.	SHEETS	CITY ENGR.	DATE	USER DEPT.	DATE	USER DEPT.	DATE

APPROVAL OF REVISIONS

STATE OF NEW MEXICO JOSEPH E. ... 4396 REGISTERED PROFESSIONAL ENGINEER 10-28-92

HOLMES & NARVER, INC.
6501 AMERICAS PARKWAY, SUITE 700
ALBUQUERQUE, NEW MEXICO 87110
PHONE (505) 889-4100

APPROVED FOR CONSTRUCTION
Russell B. Sirles
10-28-92 C.E.

DRAWING NO. 4344.90

SHEET G-1 OF 22

DWG: J:\CAD\277800\J:G-1 TIME: 09-22-92 15:05:41 plot scale: 1"=1"

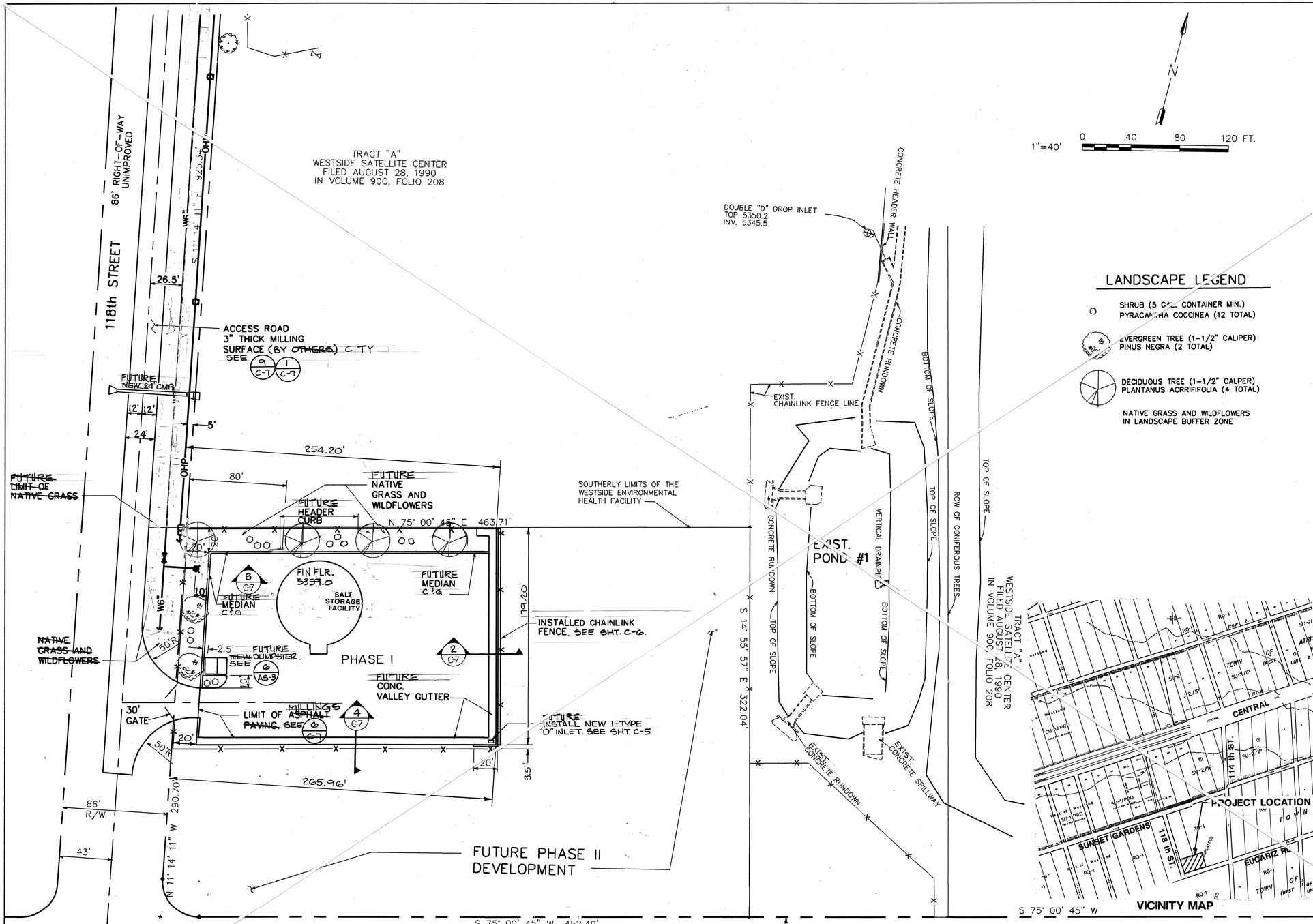

RECORD SET
David J. Larrow
1-10-95

SHEET NOT USED
SEE SHEET C-2

GENERAL NOTES

1. LOCATION OF UTILITIES ARE APPROXIMATE. IT IS THE CONTRACTOR'S RESPONSIBILITY TO LOCATE ALL PERTINENT UTILITIES IN THE FIELD. CALL ONE CALL SYSTEM, INC. AT 260-1990 TWO WORKING DAYS BEFORE ANY EXCAVATION.
2. IT IS THE CONTRACTOR'S RESPONSIBILITY TO SUPPORT ALL UTILITIES EXPOSED DURING CONSTRUCTION. CONTRACTOR WILL BE RESPONSIBLE FOR DAMAGE TO ALL UTILITIES, INCLUDING SERVICE LINES.
3. PRIOR TO CONSTRUCTION, THE CONTRACTOR SHALL EXCAVATE AND VERIFY THE HORIZONTAL AND VERTICAL LOCATIONS OF ALL OBSTRUCTIONS. SHOULD A CONFLICT EXIST, THE CONTRACTOR SHALL NOTIFY THE PUBLIC WORKS DEPARTMENT SO THAT THE CONFLICT CAN BE RESOLVED WITH MINIMUM AMOUNT OF DELAY.
4. CONTRACTOR SHALL COORDINATE WITH PNM (JIM VANN - 848-3426) WHERE LIP OF TRENCH IS LESS THAN 5' TO POWER POLE. COSTS ASSOCIATED WITH SUPPORT OF EXISTING POLES SHALL BE INCIDENTAL TO THE PROJECT.
5. CONTRACTOR SHALL BE CHARGED BY PNM FOR ANY DAMAGE TO PNM CABLES AND FOR SUPPORTING OR MINOR RELOCATIONS OF CABLES DURING CONSTRUCTION. THESE COSTS SHALL BE INCIDENTAL TO THE PROJECT.
6. TACK COAT REQUIREMENTS SHALL BE DETERMINED BY THE CITY.
7. EXCEPT WHERE OTHERWISE NOTED, NEW SEWER MAIN LINE SHALL BE SDR 35 PVC OR V.C.P. PER TECHNICAL SECTION 901.
8. ALL SANITARY SEWER MANHOLES SHALL BE BUILT IN ACCORDANCE WITH THE CITY OF ALBUQUERQUE STANDARD DRAWING 2102. ALL SANITARY SEWER MANHOLES SHALL BE 4 FEET DIAMETER UNLESS OTHERWISE NOTED.
9. WATER SHUT-OFF PLANS ARE FOR CITY USE ONLY. WATER DISTRIBUTION SYSTEM SHUT-OFFS AND TURN-ONS SHALL BE AS PER SECTION 18.3 OF THE GENERAL CONDITIONS. THE CONTRACTOR IS RESPONSIBLE FOR COORDINATION OF THE WATER SHUT-OFF PLANS WITH WATER SYSTEMS DIVISION THREE WORKING DAYS IN ADVANCE OF SHUTOFF BY WATER SYSTEMS DIVISION. (TEL. 857-8200)
10. INSTALL NEW FIRE HYDRANTS AS PER CITY OF ALBUQUERQUE STANDARD DRAWING 2340.
11. CONTRACTOR SHALL COORDINATE WITH THE GAS COMPANY OF NEW MEXICO (761-7775) TWO WEEKS PRIOR TO NEEDING A GAS LINE SEGMENT RELOCATED.
12. CONTRACTOR SHALL NOTIFY THE ENGINEER NOT LESS THAN SEVEN (7) DAYS PRIOR TO STARTING WORK IN ORDER THAT THE ENGINEER MAY TAKE NECESSARY MEASURES TO INSURE THE PRESERVATION OF SURVEY MONUMENTS. CONTRACTOR SHALL NOT DISTURB PERMANENT SURVEY MONUMENTS WITHOUT THE CONSENT OF THE ENGINEER AND SHALL NOTIFY THE ENGINEER AND BEAR THE EXPENSE OF REPLACING ANY THAT MAY BE DISTURBED WITHOUT PERMISSION. REPLACEMENT SHALL BE DONE ONLY BY THE ENGINEER. WHEN A CHANGE IS MADE IN THE FINISHED ELEVATION OF THE PAVEMENT OF ANY ROADWAY IN WHICH A PERMANENT SURVEY MONUMENT IS LOCATED. CONTRACTOR SHALL, AT HIS OWN EXPENSE, ADJUST THE MONUMENT COVER TO THE NEW GRADE UNLESS OTHERWISE SPECIFIED. REFER TO SECTION 4.4 OF THE GENERAL CONDITIONS.
13. PROVIDE 4 1/2 FEET OF BURY ON ALL FIRE HYDRANTS.
14. TRENCH BACKFILL FOR PIPELINES SHALL BE COMPACTED TO 95% OF MAXIMUM DENSITY AS DETERMINED BY ASTM D1557 IN ACCORDANCE WITH BERNALILLO COUNTY PUBLIC WORKS SPECIFICATIONS.

AS BUILT INFROMATION

CONTRACTOR: PIMA CONSTRUCTION CO
CONSULTANT: CITY OF ALBUQUERQUE
STAMPED BY: CITY OF ALBUQUERQUE — DATE 7/92
INSPECTOR'S ACCEPTANCE BY: — DATE
FIELD VERIFICATION BY: — DATE
DRAWINGS CORRECTED BY: — DATE
MICRO-FILM INFORMATION
RECORDED BY — DATE
NO.

BENCH MARKS

HORIZ. – "REWARD" ACS STATION
USC &BRASS TABLET
NM STATE PLANE – CENTRAL ZONE
E = 350,944.85 N = 1,487,301.42
G/G = 0.99967114
DELTA ALPHA = 00° 17' 11"
VERT. – 1" REBAR ELEV. 5305.73
SE CORNER OF EUCARIZ 210±

SURVEY INFORMATION

FIELD NOTES

NO.	BY	DATE
1	COA – M. REYNOLDS	3/6/92
2	COA – M. REYNOLDS	7/31/92

ENGINEER'S SEAL

David J. Larrow 10-21-92

NO.	DATE	REMARKS	BY
		REVISIONS	

DESIGN
DESIGNED BY: DJL/PMT — DATE: 10/92
DRAWN BY: PMT — DATE: 10/92
CHECKED BY: DJL — DATE: 10/92

Holmes & Narver

CITY OF ALBUQUERQUE
PUBLIC WORKS DEPARTMENT
ENGINEERING GROUP

TITLE: EAST CENTRAL/WEST CENTRAL SALT STORAGE FACILITIES
WEST CENTRAL SITE PLAN

APPROVALS	ENGINEER	DATE	APPROVALS	ENGINEER	DATE
DRC CHAIRMAN	[illegible]	10-28-92	WATER	R.W. Kane	10-27-92
TRANSPORTATION	N/A CHD	10-23-92	WASTE WATER	R.W. Kane	10-27-92
HYDROLOGY	[illegible]	10-27-92			
PARKS & REC					

DRAWING NO. 4344.90 — MAP NO. L8 — SHEET C-1 OF 22

DWG: J:\CAD\277800\J:2778C11 TIME: 08-24-92 12:16:58

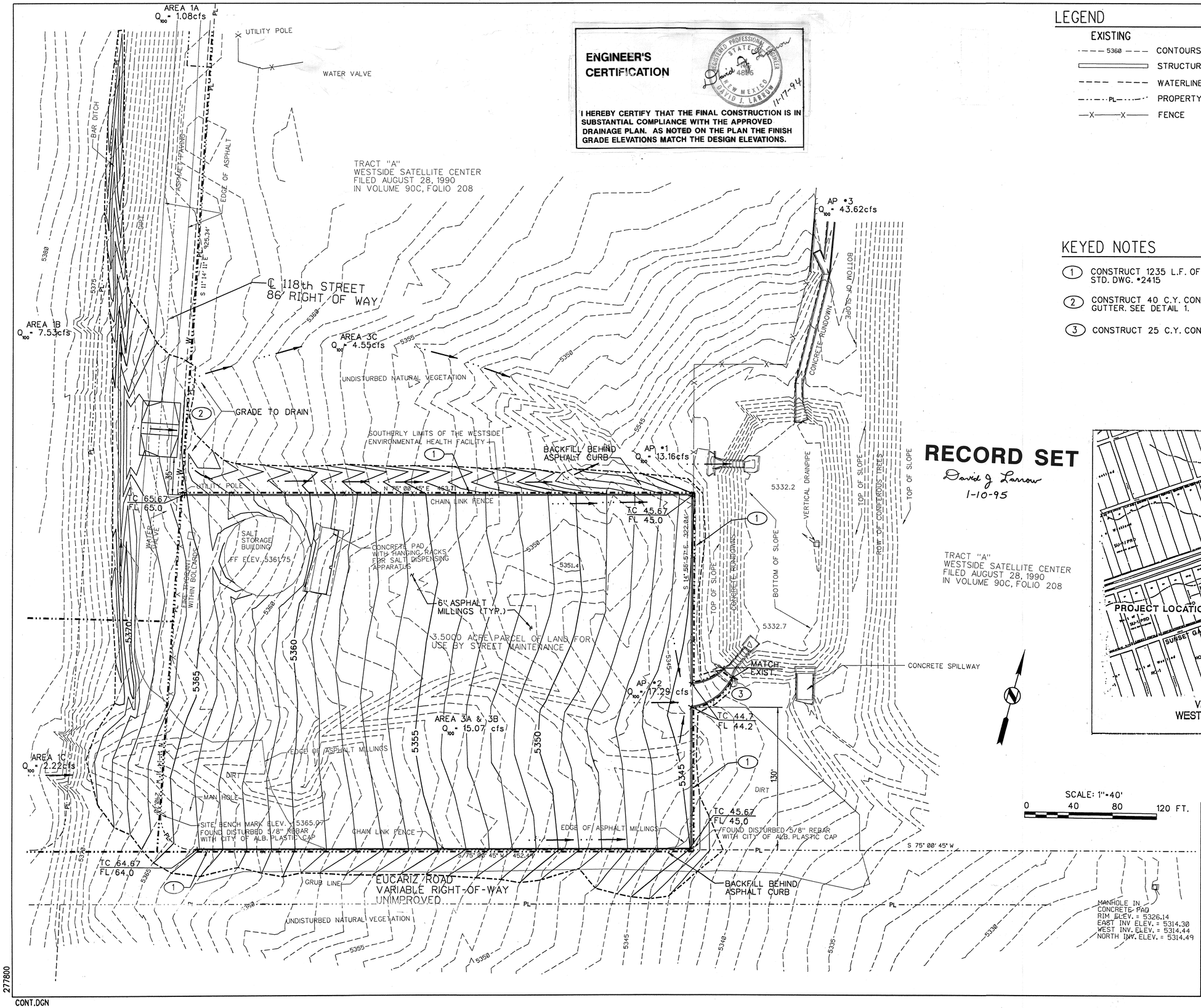

ENGINEER'S CERTIFICATION

I HEREBY CERTIFY THAT THE FINAL CONSTRUCTION IS IN SUBSTANTIAL COMPLIANCE WITH THE APPROVED DRAINAGE PLAN. AS NOTED ON THE PLAN THE FINISH GRADE ELEVATIONS MATCH THE DESIGN ELEVATIONS.

REGISTERED PROFESSIONAL ENGINEER — STATE OF NEW MEXICO — 4896 — DAVID J. LARROW

David J. Larrow 11-17-94

LEGEND

EXISTING	NEW
5360 CONTOURS	5360 CONTOURS
STRUCTURES	STRUCTURES
WATERLINE	ASPHALT CURB
PL PROPERTY LINE	FLOW LINE
X FENCE	TC 65.5 TOP OF CONC/ CURB ELEV.
	FL 65.5 FLOWLINE ELEV.
	DRAINAGE AREA BOUNDARY
	LIMITS OF CONSTRUCTION

KEYED NOTES

1. CONSTRUCT 1235 L.F. OF ASPHALT CURB PER C.O.A. STD. DWG. #2415
2. CONSTRUCT 40 C.Y. CONCRETE VALLEY GUTTER. SEE DETAIL 1.
3. CONSTRUCT 25 C.Y. CONCRETE CHUTE. SEE DETAIL 2.

RECORD SET

David J. Larrow
1-10-95

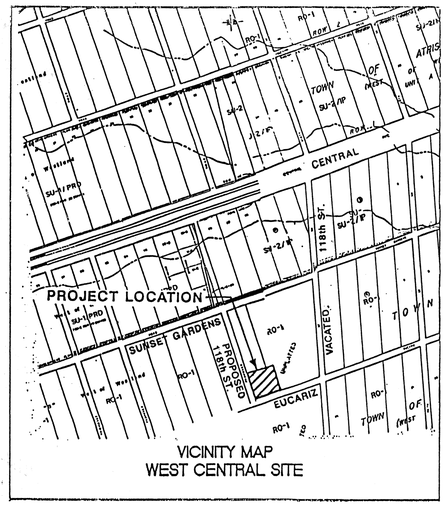

VICINITY MAP
WEST CENTRAL SITE

AS BUILT INFORMATION

CONTRACTOR: PARK CONSTRUCTION CO
STAMPED BY: CITY OF ALBUQUERQUE — DATE 7/8/94
INSPECTIONS: CITY OF ALBUQUERQUE — DATE 7/8/94
ACCEPTANCE BY — DATE
FIELD VERIFICATION BY — DATE
DRAWINGS CORRECTED BY — DATE
MICRO-FILM INFORMATION
RECORDED BY — DATE
NO.

BENCH MARKS

HORIZ. - "REWARD" ACS STATION
USC &BRASS TABLET
NM STATE PLANE - CENTRAL ZONE
E = 350,944.85 N = 1,487,301.42
G/G = 0.99967114
DELTA ALPHA = 00° 17' 11"
VERT. - 1" REBAR ELEV. 5305.73
SE CORNER OF EUCARIZ 210'±

SURVEY INFORMATION

FIELD NOTES

NO.	BY	DATE
1	COA - M. REYNOLDS	3/94
2	COA - M. REYNOLDS	7/31/92

ENGINEERS SEAL

REGISTERED PROFESSIONAL ENGINEER — STATE OF NEW MEXICO — 4896 — DAVID J. LARROW — 11-17-94

NO.	DATE	REMARKS	BY
1	6/6/94	DRAINAGE ADDENDUM	LCL

REVISIONS

		DATE
DESIGN		
DESIGNED BY	L. LOSACK	6/94
DRAWN BY	L. LOSACK	6/94
CHECKED BY	D. LARROW	6/94

HN Holmes & Narver

CITY OF ALBUQUERQUE
PUBLIC WORKS DEPARTMENT
ENGINEERING GROUP

TITLE: EAST CENTRAL/WEST CENTRAL SALT STORAGE FACILITIES GRADING & DRAINAGE PLAN

APPROVALS	ENGINEER	DATE	APPROVALS	ENGINEER	DATE
PARKS/GEN. SERV.			TRAFFIC		
ENVIRON. HEALTH					
HYDROLOGY					

DRAWING NO. 4344.90 | MAP NO. L8 | SHEET C-2 OF 22

277800

CONT.DGN

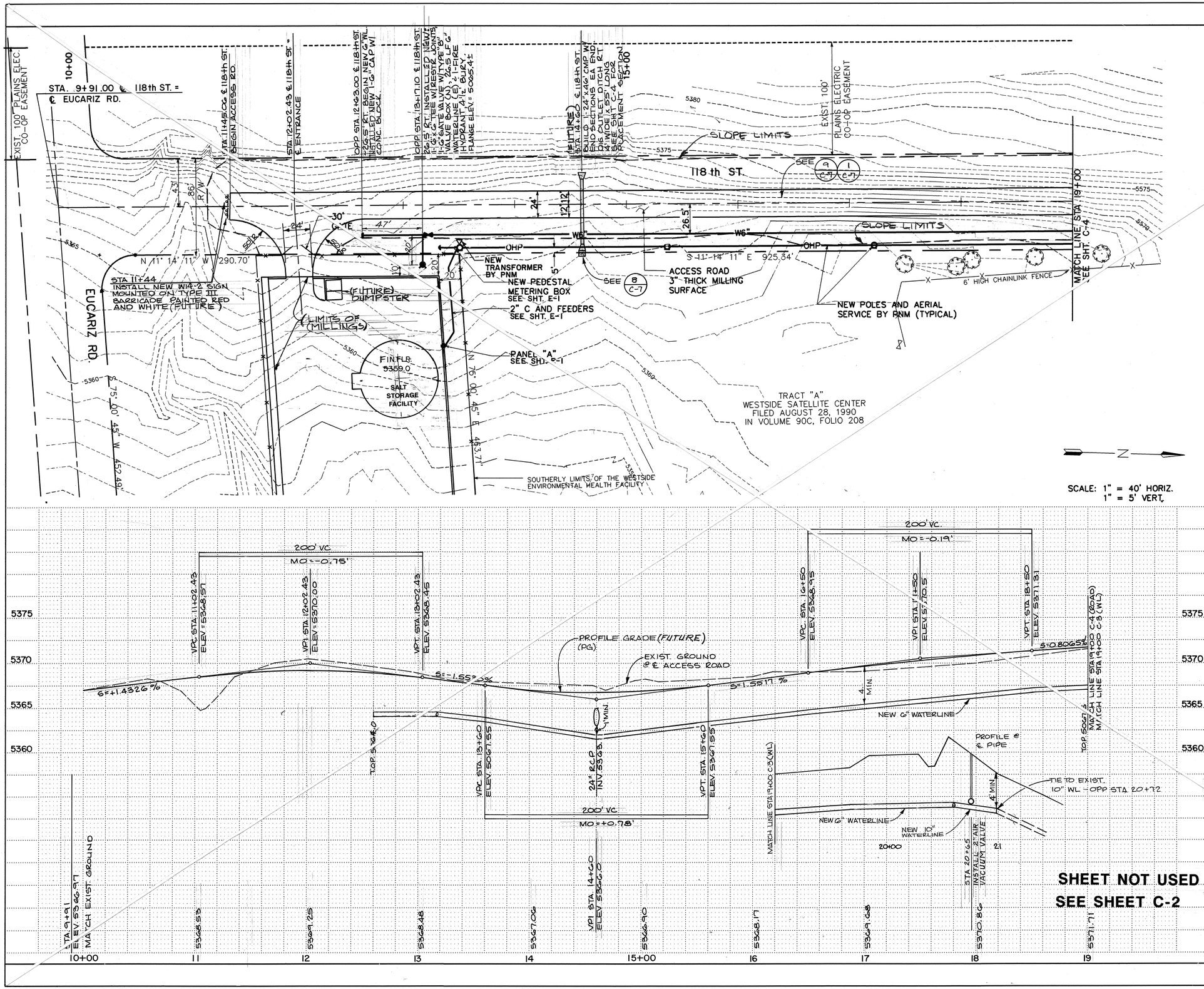

SHEET NOT USED
SEE SHEET C-2

RECORD SET
David J. Larson
1-10-95

HN Holmes & Narver

CITY OF ALBUQUERQUE
PUBLIC WORKS DEPARTMENT
ENGINEERING GROUP

TITLE: EAST CENTRAL/WEST CENTRAL SALT STORAGE FACILITIES ACCESS ROAD – PLAN AND PROFILE

APPROVALS	ENGINEER	DATE	APPROVALS	ENGINEER	DATE
DRC CHAIRMAN			WATER	R.W. Kane	10-27-92
TRANSPORTATION		10-28-92	WASTE WATER	R.W. Kane	10-27-92
HYDROLOGY	N/A				
PARKS & REC					

DRAWING NO.	MAP NO.	SHEET	OF
4344.90	L8	C-3	22

AS BUILT INFORMATION
CONTRACTOR: PURA CONSTRUCTION CO.
WORK STAKED BY: PURA CONSTRUCTION CO. DATE: 7-93
INSPECTED BY: CITY OF ALBUQUERQUE
INSPECTOR'S ACCEPTANCE: DATE
FIELD VERIFICATION BY: DATE
DRAWINGS CORRECTED BY: DATE
MICRO-FILM INFORMATION
RECORDED BY: DATE
NO.

BENCH MARKS
HORIZ. – "REWARD" ACS STATION
USC &BRASS TABLET
NM STATE PLANE – CENTRAL ZONE
E = 350,944.85 N = 1,487,301.42
G/G = 0.99967114
DELTA ALPHA = 00° 17' 11"
VERT. – 1" REBAR ELEV. 5305.73
SE CORNER OF EUCARIZ 210+

SURVEY INFORMATION

NO.	BY	DATE	FIELD NOTES
1	COA – M. REYNOLDS	3/6/92	
2	COA – M. REYNOLDS	7/31/92	

ENGINEER'S SEAL
PROFESSIONAL ENGINEER STATE OF NEW MEXICO DAVID J. LARSON
10-21-92

NO.	DATE	REMARKS	BY
1	7/20/93	ADDED AIR VACUUM VALVE	DJL

REVISIONS

DESIGN		
DESIGNED BY:	DJL/PMT	DATE: 10/92
DRAWN BY:	PMT	DATE: 10/92
CHECKED BY:	DJL	DATE: 10/92

TIME: 09-25-92 08:03:16
DWG: J:\CAD\277800\J:2778C12

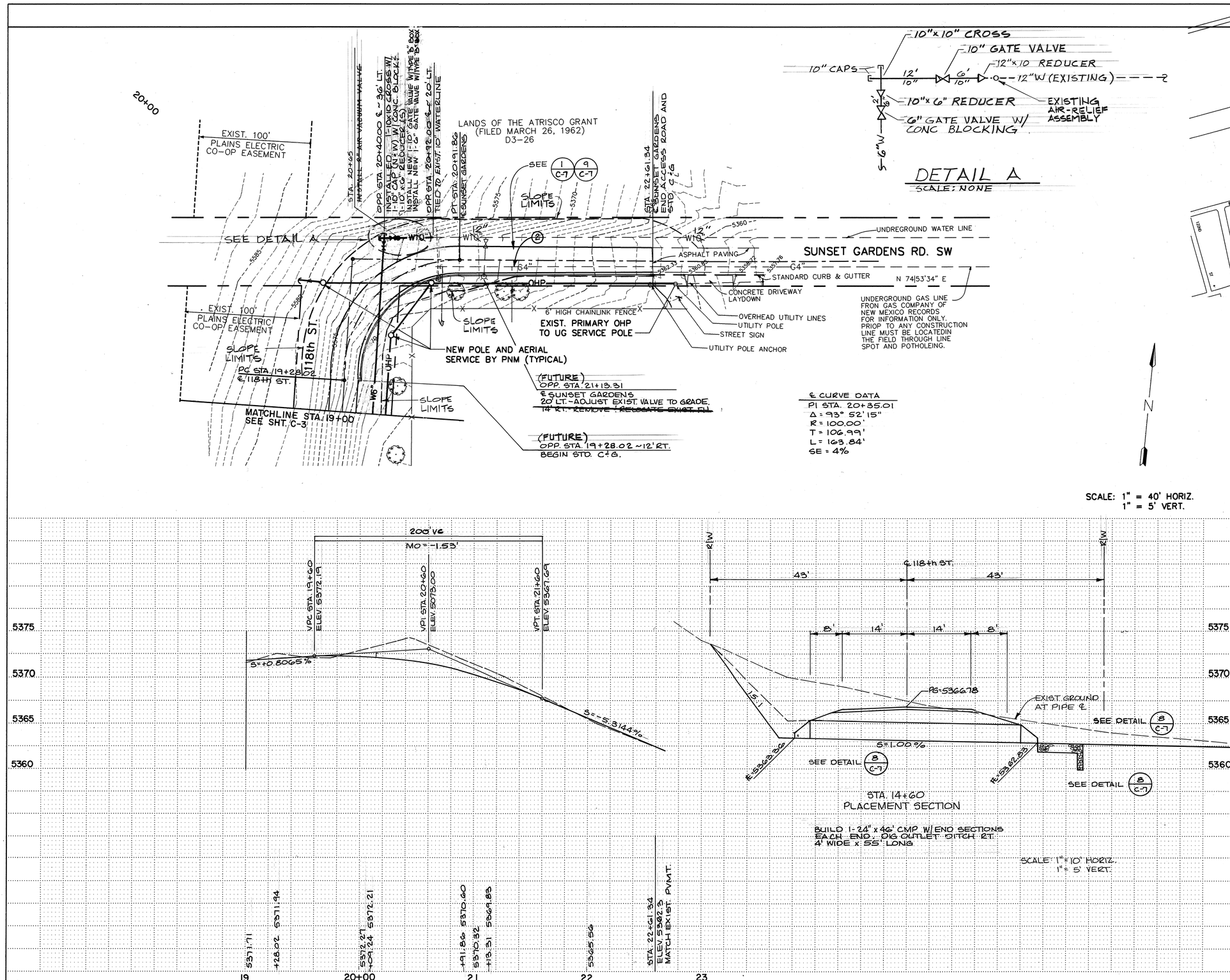

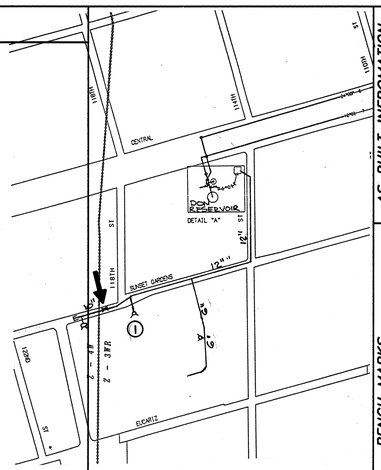

WATER SHUT-OFF

- CONTRACTOR SHALL BE RESPONSIBLE FOR TIMING AND COORDINATION OF THE WATER SHUT-OFF REQUIREMENTS IN CONJUNCTION WITH COMPLETION OF THIS PROJECT.
- AT LEAST THREE (3) WORKING DAYS PRIOR TO CONSTRUCTION, CONTRACTOR SHALL CONTACT PWD/WATER SYSTEMS DIVISION (857-8200) TO INITIATE IMPLEMENTATION OF THIS WATER SHUT-OFF PLAN.
- TO COMPLETE NON-PRESSURE CONNECTION SHOWN, THE EXISTING VALVES LISTED BELOW AND MARKED WITH AN ARROW (→) ON THE ABOVE MAP MUST BE CLOSED BY PWD/WATER SYSTEMS PERSONNEL.

MAP #	VALVE #
L8	?

(1) PROVIDE TEMPORARY AIR RELIEF VALVE.

(2) GAS LINE (200 LF.±) TO BE RE-LOCATED BY THE GAS COMPANY OF NM. WORK IS TO BE COORDINATED AND PAID BY THE CONTRACTOR UNDER THE UTILITY RELOCATION ALLOWANCE, SECTION 9 OF THE SPECIAL PROVISIONS.

RECORD SET
David J. Larson
1-10-95

AS BUILT INFORMATION

CONTRACTOR: PIMA CONSTRUCTION CO
WORK STAKED BY: PIMA CONSTRUCTION CO — DATE 7/92
SURVEY VERIFIED BY: CITY OF ALBUQUERQUE — DATE 7/94
ACCEPTANCE BY: — DATE
FIELD VERIFICATION BY: — DATE
DRAWINGS CORRECTED BY: — DATE
MICRO-FILM INFORMATION
RECORDED BY: — DATE
NO.

BENCH MARKS

HORIZ. – "REWARD" ACS STATION
USC &BRASS TABLET
NM STATE PLANE – CENTRAL ZONE
E = 350,944.85 N = 1,487,301.42
G/C = 0.99967114
DELTA ALPHA = 00° 17' 11"
VERT. – 1" REBAR ELEV. 5305.73
SE CORNER OF EUCARIZ 210+-

SURVEY INFORMATION

FIELD NOTES

NO.	BY	DATE
1	COA – M. REYNOLDS	3/6/92
2	COA – M. REYNOLDS	7/31/92

ENGINEER'S SEAL

NEW MEXICO PROFESSIONAL ENGINEER — DAVID J. LARSON — 10-21-92

REVISIONS

NO.	DATE	REMARKS	BY
1	11/20/93	ADDED AIR VACUUM VALVE	DJL

DESIGN
DESIGNED BY: DJL/PMT — DATE: 10/92
DRAWN BY: PMT — DATE: 10/92
CHECKED BY: DJL — DATE: 10/92

Holmes & Narver

CITY OF ALBUQUERQUE
PUBLIC WORKS DEPARTMENT
ENGINEERING GROUP

TITLE: EAST CENTRAL/WEST CENTRAL SALT STORAGE FACILITIES ACCESS ROAD – PLAN AND PROFILE

APPROVALS	ENGINEER	DATE	APPROVALS	ENGINEER	DATE
DRC CHAIRMAN		10-28-92	WATER	R.W. Kane	10-27-92
TRANSPORTATION		10-27-92	WASTE WATER	R.W. Kane	10-27-92
HYDROLOGY		10-27-92			
PARKS & REC					

DRAWING NO. 4344.90 — MAP NO. L8 — SHEET C-4 OF 22

DWG: J:\CAD\277800\U2778C13 TIME: 09-25-92 07:46:48

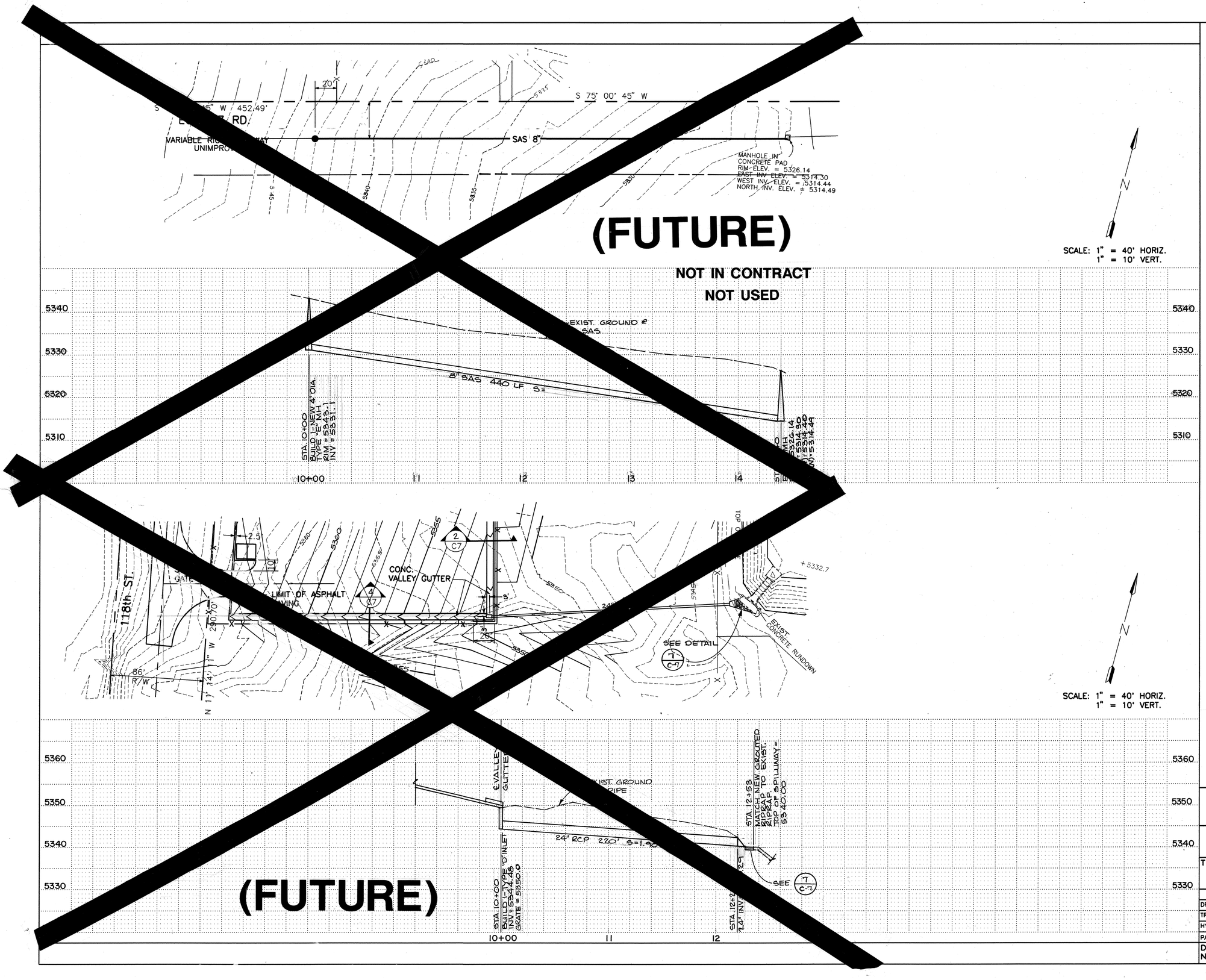

RECORD SET

David J Larrow
1-10-95

HN
Holmes & Narver

CITY OF ALBUQUERQUE
PUBLIC WORKS DEPARTMENT
ENGINEERING GROUP

TITLE: EAST CENTRAL/WEST CENTRAL SALT STORAGE FACILITIES STORM DRAIN PROFILE

APPROVALS	ENGINEER	DATE	APPROVALS	ENGINEER	DATE
DRC CHAIRMAN		10-28-92	WATER	N/A RWK	10-27-92
TRANSPORTATION	N/A RWK	10-28-92	WASTE WATER	N/A RWK	10-27-92
HYDROLOGY		10-27-92			
PARKS & REC					

DRAWING NO. 4344.90 | MAP NO. L8 | SHEET C-5 OF 22

AS BUILT INFROMATION

CONTRACTOR PIMA CONSTRUCTION CO
CITY OF ALBUQUERQUE
CONSTRUCTION STAKED BY PIMA CONSTRUCTION CO DATE 7/94
STAKED BY CITY OF ALBUQUERQUE DATE 7/94
INSPECTOR'S ACCEPTANCE BY DATE
FIELD VERIFICATION BY DATE
VERIFICATION BY DATE
CORRECTED BY DATE
MICRO-FILM INFORMATION
RECORDED BY DATE
NO.

BENCH MARKS

HORIZ. – "REWARD" ACS STATION
USC &BRASS TABLET
NM STATE PLANE – CENTRAL ZONE
E = 350,944.85 N = 1,487,301.42
G/G = 0.99967114
DELTA ALPHA = 00° 17' 11"
VERT. – 1" REBAR ELEV. 5305.73
SE CORNER OF EUCARIZ 210±

SURVEY INFORMATION

FIELD NOTES

NO.	BY	DATE
1	COA – M. REYNOLDS	3/6/92
2	COA – M. REYNOLDS	7/31/92

ENGINEER'S SEAL

REGISTERED PROFESSIONAL ENGINEER
STATE OF NEW MEXICO
DAVID J. LARROW
No. 9

David J Larrow
10-21-92

NO.	DATE	REMARKS	BY

REVISIONS

DESIGN

DESIGNED BY: DJL/PMT DATE: 10/92
DRAWN BY: PMT DATE: 10/92
CHECKED BY: DJL DATE: 10/92

TIME: 09-24-92 10:56:32
DWG: J:\CAD\277800\J2778C14

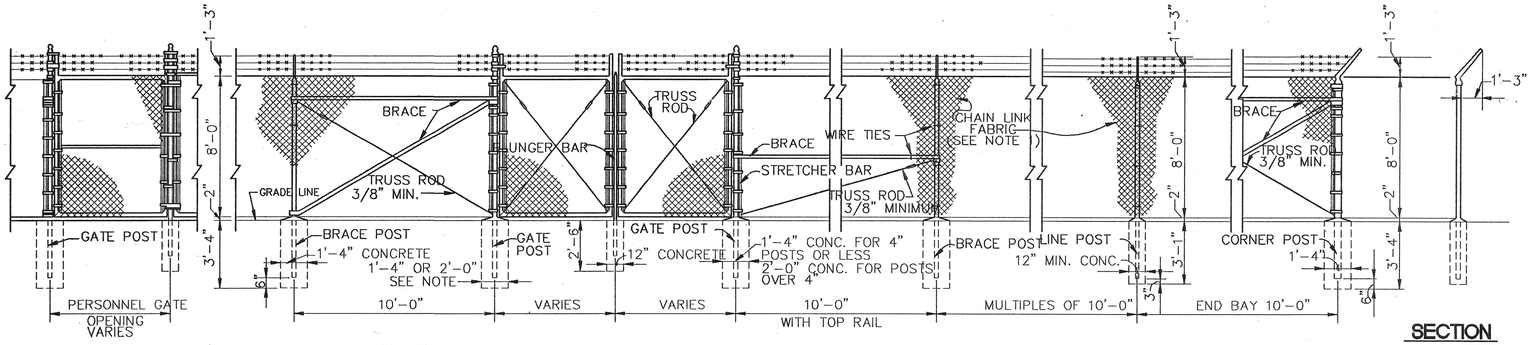

SECTION

CHAIN LINK FABRIC FENCE TYPE FE-6

N. T. S.

1 / C-6

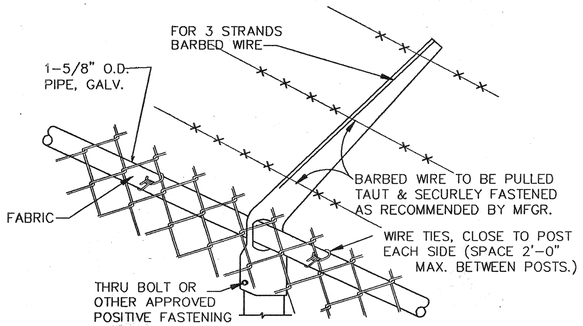

EXTENSION ARM W/TOP RAIL FOR BARBED WIRE

(ARMS FOR H COL. POSTS & TUBULAR POSTS SIMILAR)
N.T.S.

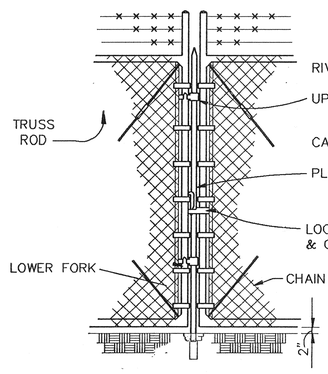

ELEVATION

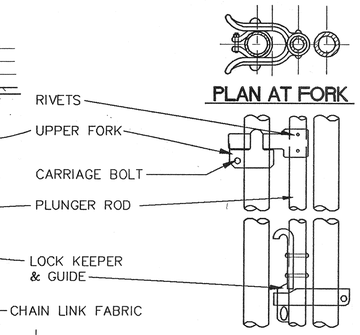

PLAN AT FORK

DETAIL

SWING GATE DETAILS

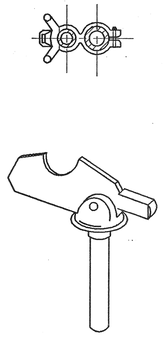

GATE KEEPER

(TO HOLD GATE OPEN)

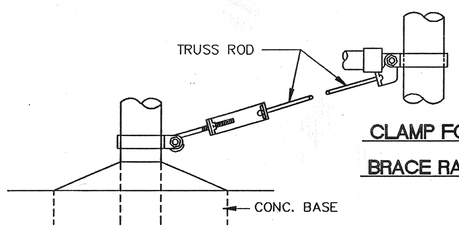

CLAMP FOR BRACE RAIL

TRUSS ROD + BAND

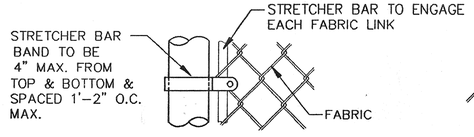

DETAIL END OR GATE POST

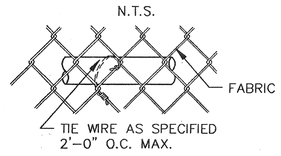

WIRE TIES FOR BRACE RAIL

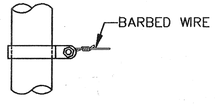

BAND FOR WIRE STRECHING

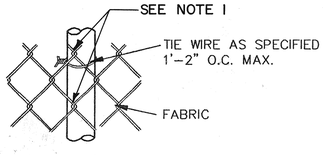

WIRE TIES FOR POST

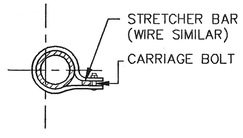

PLAN AT BANDS

TOP VIEW ELEVATION

DETAIL OF BONDING GATE FRAMES TO SUPPORTING POST

FASTENING DETAILS-SIMILAR FOR TUBULAR POST OF H COLUMNS

N. T. S.

NOTE:

1. TACK WELD FENCE FABRIC TO ALL STRUCTURAL MEMBERS. THREE (3) TACKS PER POST (MIN.).

AS BUILT INFROMATION

CONTRACTOR PIMA CONSTRUCTION CO
CITY OF ALBUQUERQUE
WORK STAKED BY PIMA CONSTRUCTION CO DATE 7/92
INSPECTED BY CITY OF ALBUQUERQUE DATE 7/94
ACCEPTANCE BY DATE
FIELD VERIFICATION BY DATE
DRAWINGS CORRECTED BY DATE

MICRO-FILM INFORMATION

RECORDED BY DATE
NO.

BENCH MARKS

SURVEY INFORMATION

FIELD NOTES

NO.	BY	DATE
1	COA - M. REYNOLDS	3/6/92
2	COA - M. REYNOLDS	7/31/92

ENGINEER'S SEAL

REGISTERED PROFESSIONAL ENGINEER STATE OF NEW MEXICO DAVID J. LARROW
David J. Larrow 10-21-92

NO.	DATE	REMARKS	BY

REVISIONS

DESIGN

DESIGNED BY: D.J.LARROW DATE: 10/92
DRAWN BY: J.L.MOORE DATE: 10/92
CHECKED BY: D.J.LARROW DATE: 10/92

RECORD SET
David J. Larrow
1-10-95

Holmes & Narver

CITY OF ALBUQUERQUE
PUBLIC WORKS DEPARTMENT
ENGINEERING GROUP

TITLE: EAST CENTRAL/WEST CENTRAL SALT STORAGE FACILITY CHAIN LINK FENCE DETAILS

APPROVALS	ENGINEER	DATE	APPROVALS	ENGINEER	DATE
DRC CHAIRMAN	N/A	10-28-92	WATER	N/A RWK	10-27-92
TRANSPORTATION	N/A RHB	10-28-92	WASTE WATER	N/A RWK	10-27-92
HYDROLOGY	NA				
PARKS & REC					

DRAWING NO. 4344.90 MAP NO. SHEET C-6 OF 20

DWG: J:\CAD\277800\J-FENCEDET TIME: 09-30-92 06:37:01

SCALE: 1"=20

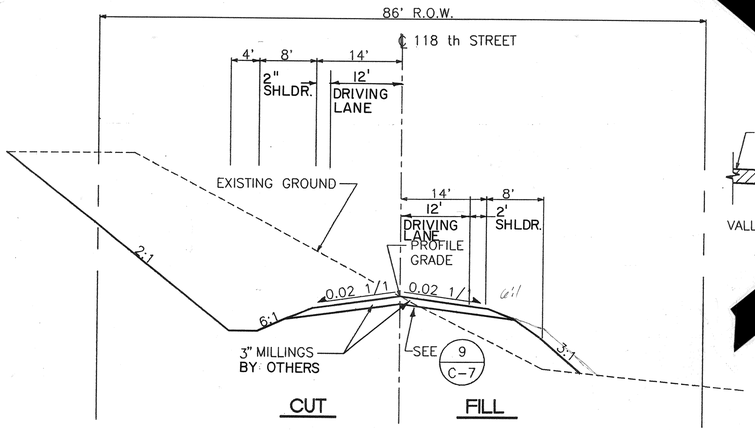

TYPICAL ROADWAY SECTION 1 C-7

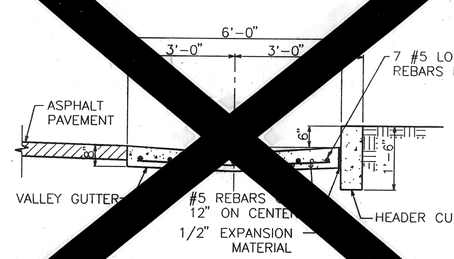

SECTION A 2

(FUTURE)

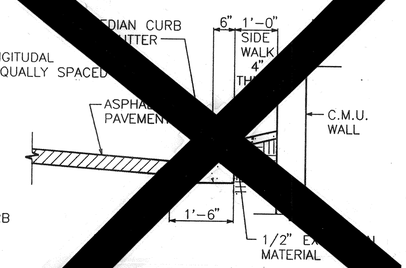

(FUTURE)

SECTION B 3 C-7

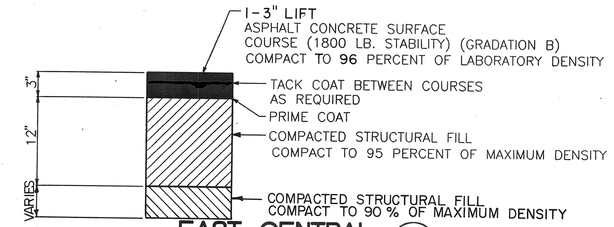

EAST CENTRAL 5 C-7

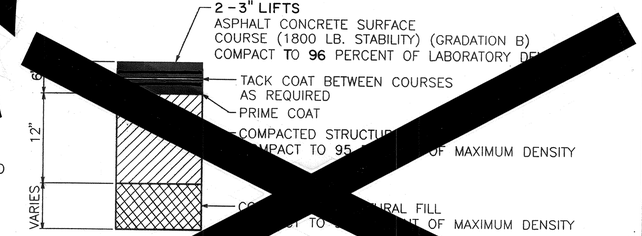

CENTRAL 6 C-7

(FUTURE)

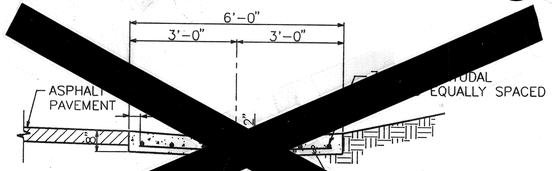

(FUTURE)

SECTION C

PARKING LOT PAVING DETAILS

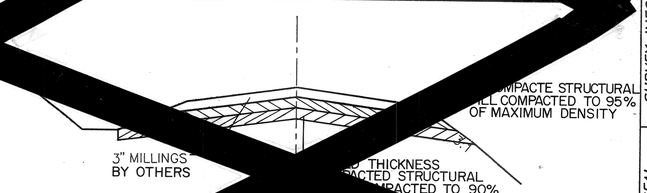

(FUTURE)

ROADWAY PAVING 9

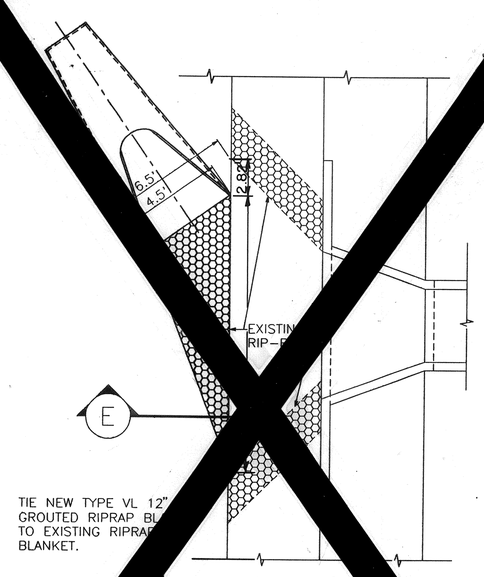

(FUTURE)

RCP RIP-RAP DETAIL 7 C-7

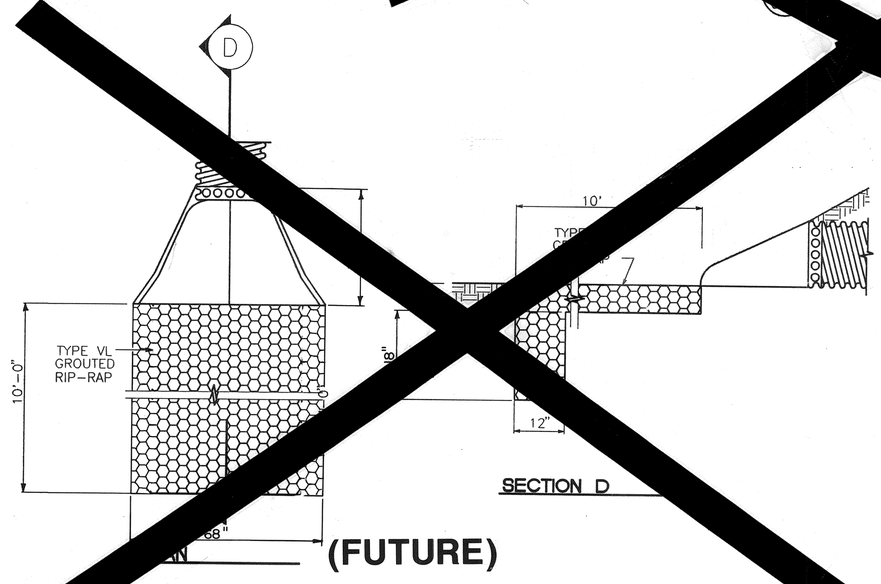

(FUTURE)

SECTION D

CMP DETAILS 8 C-7

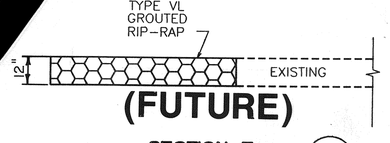

(FUTURE)

SECTION E E

RECORD SET

David J Larrow
1-10-95

NOT TO SCALE

Holmes & Narver

CITY OF ALBUQUERQUE
PUBLIC WORKS DEPARTMENT
ENGINEERING GROUP

TITLE: EAST CENTRAL/WEST CENTRAL SALT STORAGE FACILITIES CIVIL DETAILS

APPROVALS	ENGINEER	DATE	APPROVALS	ENGINEER	DATE
DRC CHAIRMAN		10-28-92	WATER	MA RWK	10-27-92
TRANSPORTATION		10-28-92	WASTE WATER	MA RWK	10-27-92
HYDROLOGY		10-27-92			
PARKS & REC					

DRAWING NO.	MAP NO.	SHEET	OF
4344.90		C-7	22

AS BUILT INFROMATION
CONTRACTOR: PUMA CONSTRUCTION CO
WORK STAKED BY: CITY OF ALBUQUERQUE DATE 7/93-7/94
INSPECTOR'S ACCEPTANCE BY: DATE
FIELD VERIFICATION BY: DATE
DRAWINGS CORRECTED BY: DATE

MICRO-FILM INFORMATION
RECORDED BY: DATE
NO.

BENCH MARKS

SURVEY INFORMATION
FIELD NOTES

NO.	BY	DATE
1	COA - M. REYNOLDS	3/6/92
2	COA - M. REYNOLDS	7/31/92

ENGINEER'S SEAL
David J Larrow 10-21-92

NO.	DATE	REMARKS	BY
		REVISIONS	

DESIGN
DESIGNED BY: D.J.LARROW DATE: 10/92
DRAWN BY: J.L.MOORE DATE: 10/92
CHECKED BY: D.J.LARROW DATE: 10/92

TIME: 10-02-92 08:25:41
DWG: J:\CAD\277800\J:C-DETAIL
SCALE: 1=1

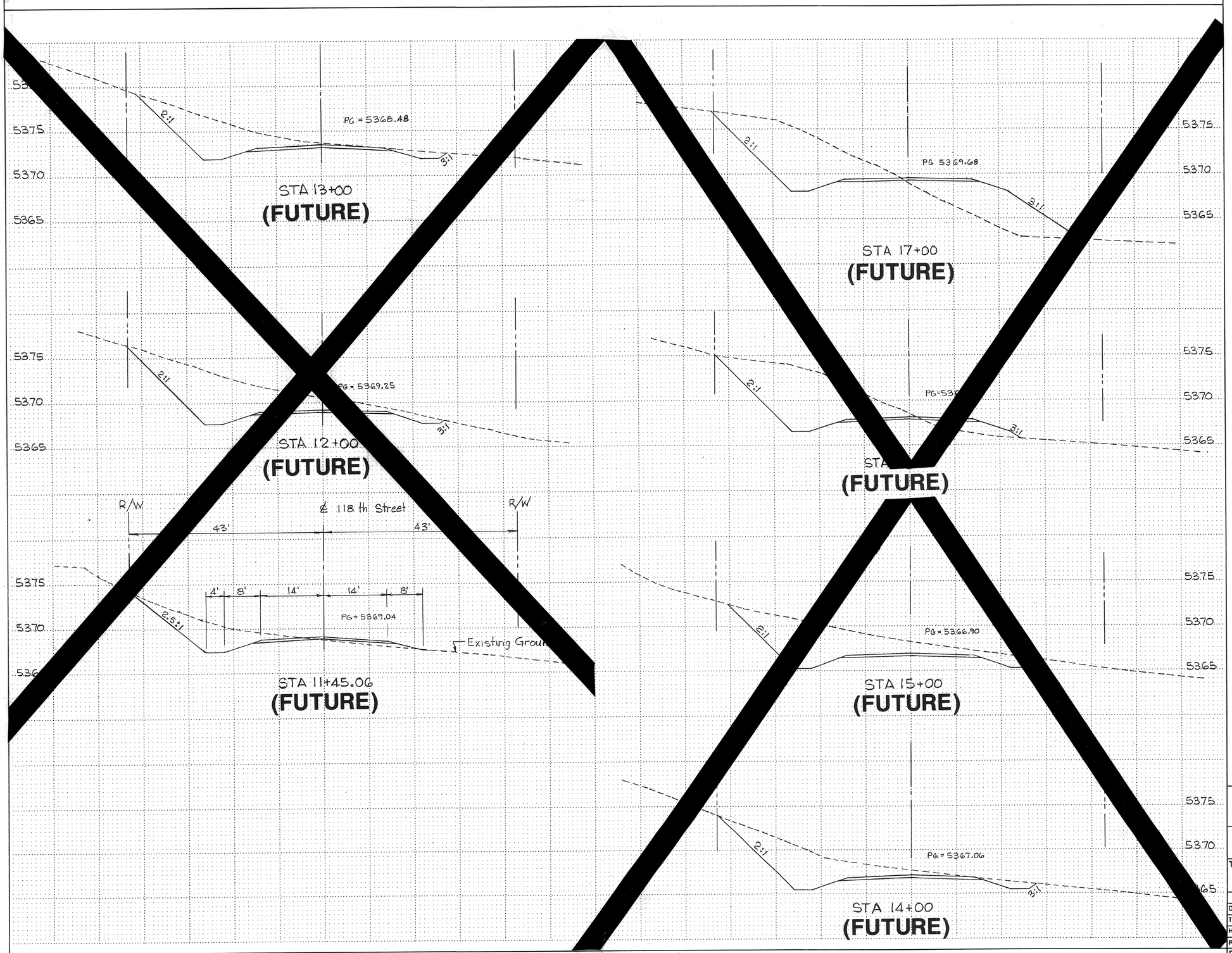

AS BUILT INFROMATION

CONTRACTOR: PIMA CONSTRUCTION CO
CITY OF ALBUQUERQUE

WORK STARTED BY: PIMA CONSTRUCTION CO DATE 7/19/91
WORK COMPLETED BY: CITY OF ALBUQUERQUE DATE 7/1/93
INSPECTOR'S ACCEPTANCE BY DATE
FIELD VERIFICATION BY DATE
DRAWINGS CORRECTED BY DATE

MICRO-FILM INFORMATION

RECORDED BY DATE
NO.

BENCH MARKS

SURVEY INFORMATION

FIELD NOTES

NO.	BY	DATE
1	COA - M. REYNOLDS	3/6/92
2	COA - M. REYNOLDS	7/31/92

ENGINEER'S SEAL

REGISTERED PROFESSIONAL ENGINEER STATE OF NEW MEXICO DAVID J. LARROW 10-27-92

NO.	DATE	REMARKS	BY
		REVISIONS	
		DESIGN	

DESIGNED BY: DATE: 10/92
DRAWN BY: DATE: 10/92
CHECKED BY: DATE: 10/92

RECORD SET

David J Larrow
1-10-95

SCALE
Horiz : 1" = 10'
Vert : 1" = 5'

HN
Holmes & Narver

CITY OF ALBUQUERQUE
PUBLIC WORKS DEPARTMENT
ENGINEERING GROUP

TITLE: EAST CENTRAL/WEST CENTRAL
SALT STORAGE FACILITIES
CROSS SECTIONS

APPROVALS	ENGINEER	DATE	APPROVALS	ENGINEER	DATE
DRC CHAIRMAN	N/A	10-28-92	WATER	RWK N/A	10-27-92
TRANSPORTATION	N/A	10-28-92	WASTE WATER	N/A RWK	10-27-92
HYDROLOGY	NA				
PARKS & REC					

DRAWING NO. 4344.90 | MAP NO. L8 | SHEET C-8 OF 22

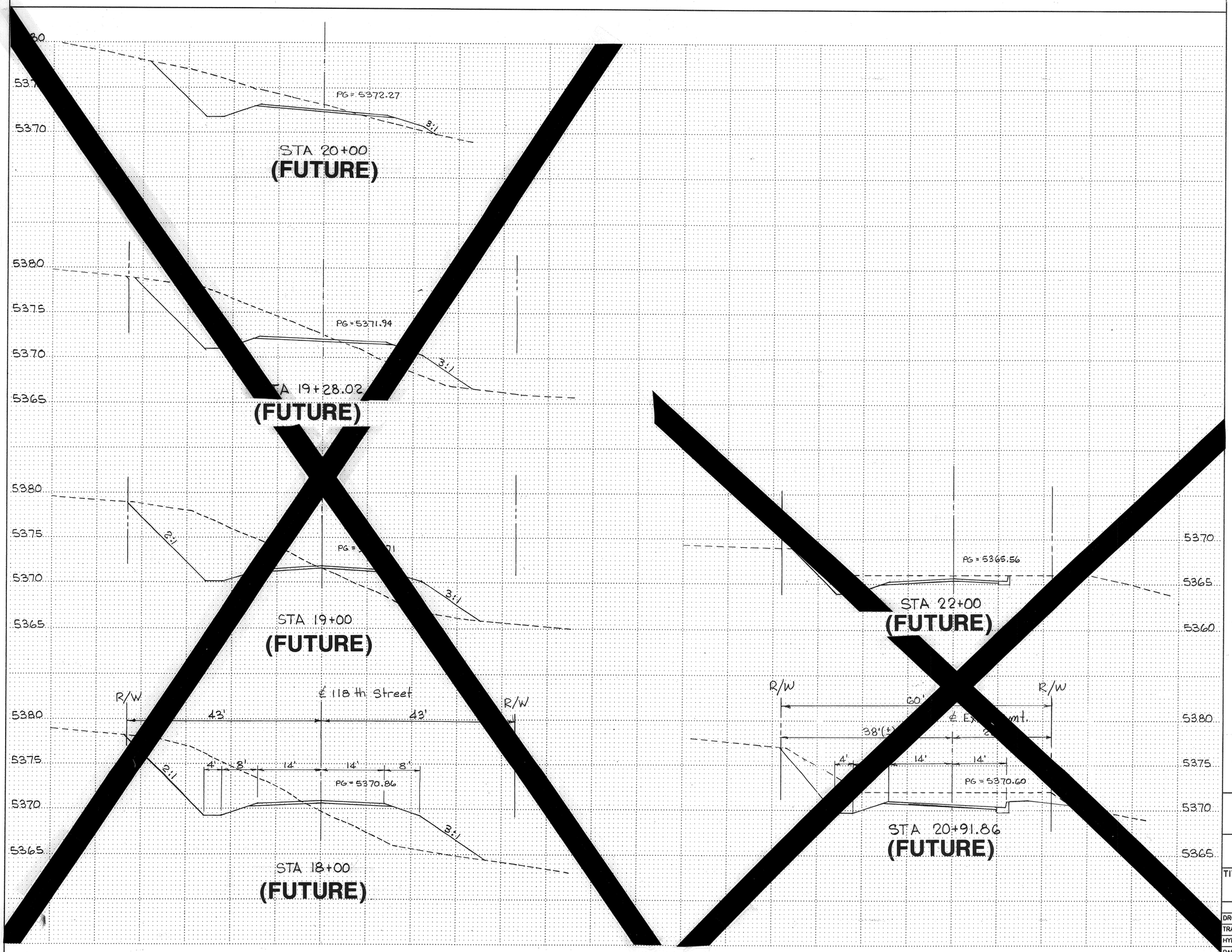

RECORD SET

David J Larson
1-10-95

SCALE:
Horiz: 1" = 10'
Vert: 1" = 5'

HN
Holmes & Narver

CITY OF ALBUQUERQUE
PUBLIC WORKS DEPARTMENT
ENGINEERING GROUP

TITLE: EAST CENTRAL/WEST CENTRAL SALT STORAGE FACILITIES CROSS SECTIONS

APPROVALS	ENGINEER	DATE	APPROVALS	ENGINEER	DATE
DRC CHAIRMAN	S.F. Goodsby	10-28-92	WATER	N/A RWK	10-27-92
TRANSPORTATION	N/A RWK	10-28-92	WASTE WATER	N/A RWK	10-27-92
HYDROLOGY	N.A.				
PARKS & REC					

DRAWING NO.	MAP NO.	SHEET	OF
4344.90	L8	C-9	22

ENGINEER'S SEAL

David J Larson 10-27-92

NO.	DATE	REMARKS	BY
		REVISIONS	

DESIGNED BY: DESIGN DATE: 10/92
DRAWN BY: DATE: 10/92
CHECKED BY: DATE: 10/92

BENCH MARKS

SURVEY INFORMATION

FIELD NOTES

NO.	BY	DATE
1	COA - M. REYNOLDS	3/6/92
2	COA - M. REYNOLDS	7/31/92

AS BUILT INFROMATION

CONTRACTOR: PIMA CONSTRUCTION CO
CITY OF ALBUQUERQUE
WORK: PIMA CONSTRUCTION CO
INSPECTED BY: CITY OF ALBUQUERQUE DATE 7/92-7/94
INSPECTOR'S ACCEPTANCE BY DATE
FIELD VERIFICATION BY DATE
DRAWINGS CORRECTED BY DATE

MICRO-FILM INFORMATION

RECORDED BY DATE
NO.

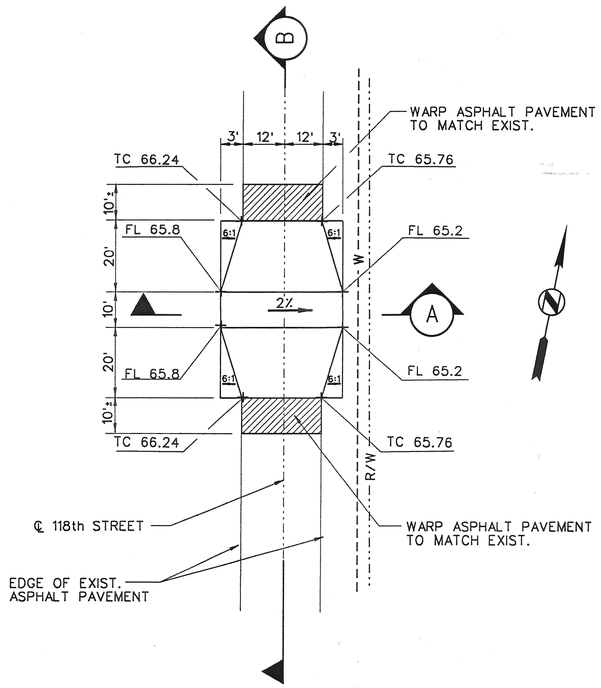

VALLEY GUTTER DETAIL (1)

SCALE: 1" = 20'-0"

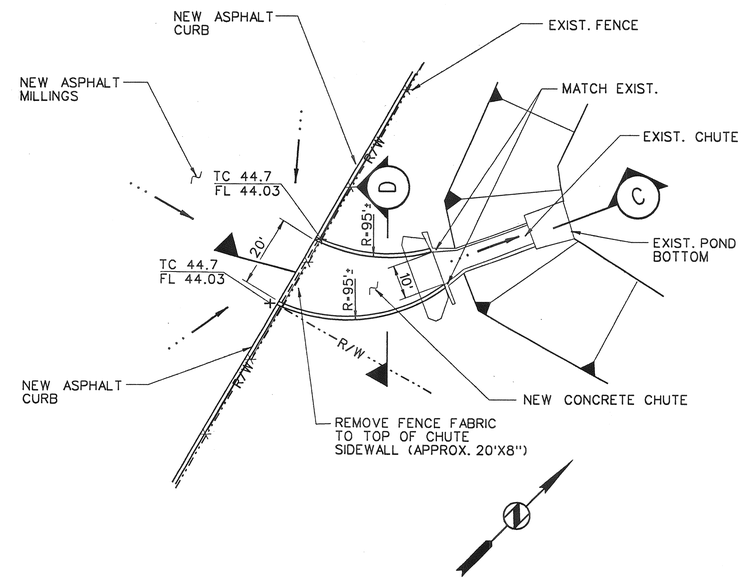

CONCRETE CHUTE DETAIL (2)

SCALE: 1" = 20'-0"

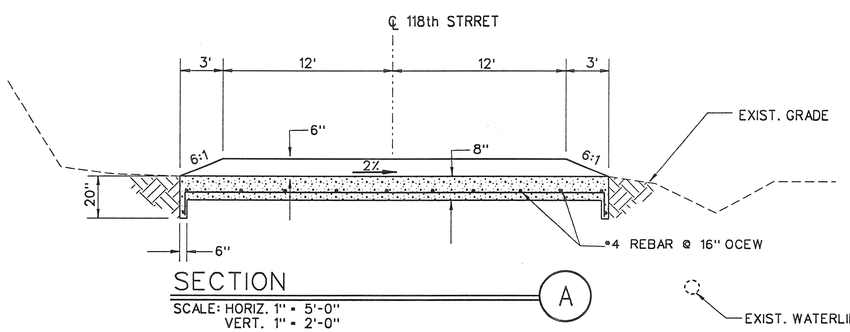

SECTION (A)

SCALE: HORIZ. 1" = 5'-0"
VERT. 1" = 2'-0"

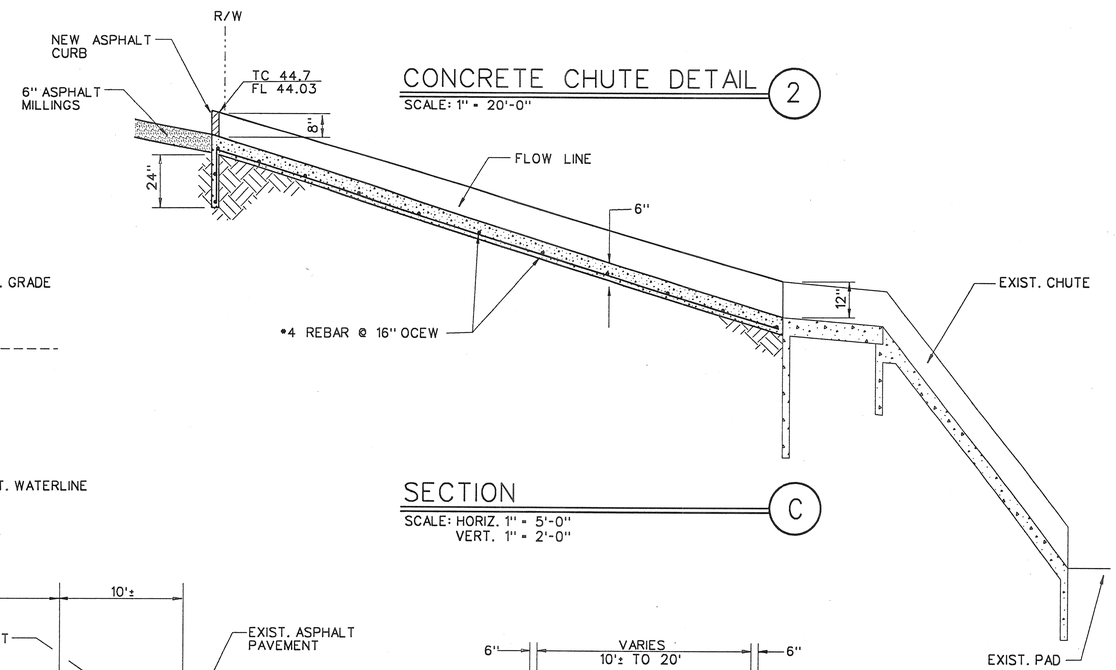

SECTION (C)

SCALE: HORIZ. 1" = 5'-0"
VERT. 1" = 2'-0"

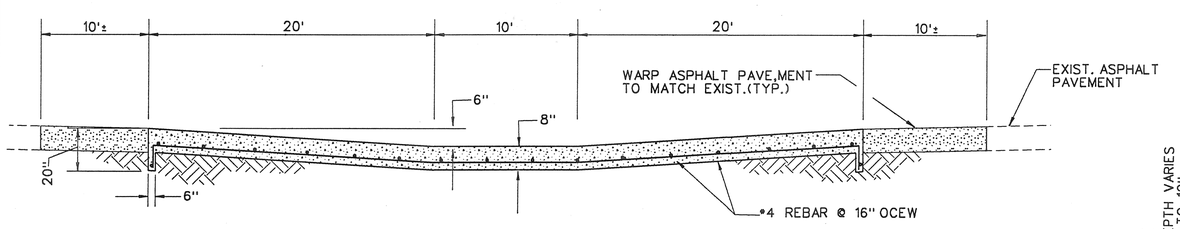

SECTION (B)

SCALE: HORIZ. 1" = 5'-0"
VERT. 1" = 2'-0"

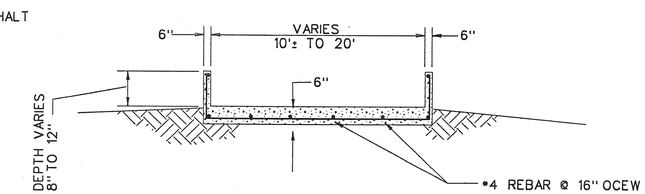

SECTION (D)

SCALE: HORIZ. 1" = 5'-0"
VERT. 1" = 2'-0"

ENGINEER'S CERTIFICATION

I HEREBY CERTIFY THAT THE FINAL CONSTRUCTION IS IN SUBSTANTIAL COMPLIANCE WITH THE APPROVED DRAINAGE PLAN. AS NOTED ON THE PLAN THE FINISH GRADE ELEVATIONS MATCH THE DESIGN ELEVATIONS.

11-17-94

RECORD SET

David J. Larrow
1-10-95

HN Holmes & Narver

CITY OF ALBUQUERQUE
PUBLIC WORKS DEPARTMENT
ENGINEERING GROUP

TITLE: EAST CENTRAL/WEST CENTRAL SALT STORAGE FACILITIES SECTIONS & DETAILS

APPROVALS	ENGINEER	DATE	APPROVALS	ENGINEER	DATE
PARKS/GEN. SERV.			TRAFFIC		
ENVIRON. HEALTH					
HYDROLOGY					

DRAWING NO. 4344.90 | MAP NO. L8 | SHEET C-10 OF 22

AS BUILT INFORMATION

CONTRACTOR: PIMA CONSTRUCTION CO
WORK STAKED BY: CITY OF ALBUQUERQUE DATE 7/93
WORK STAKED BY: PIMA CONSTRUCTION CO DATE 7/94
WORK ACCEPTED BY: CITY OF ALBUQUERQUE DATE
FIELD VERIFICATION BY: DATE
DRAWINGS CORRECTED BY: DATE
MICRO-FILM INFORMATION
RECORDED BY: DATE
NO.

BENCH MARKS

HORIZ. - "REWARD" ACS STATION
USC &BRASS TABLET
NM STATE PLANE - CENTRAL ZONE
E = 350,944.85 N = 1,487,301.42
G/G = 0.99967114
DELTA ALPHA = 00° 17' 11"
VERT. - 1" REBAR ELEV. 5305.73
SE CORNER OF EUCARIZ 210'±

SURVEY INFORMATION

FIELD NOTES

NO.	BY	DATE
1	COA - M. REYNOLDS	3/94
2	COA - M. REYNOLDS	7/31/92

ENGINEERS SEAL

NO.	DATE	REMARKS	BY
1	6/6/94	DRAINAGE ADDENDUM	L.CL

REVISIONS

DESIGN
DESIGNED BY L. LOSACK DATE 6/94
DRAWN BY L. LOSACK DATE 6/94
CHECKED BY D. LARROW DATE 6/94

2778.00

DETLS.DGN

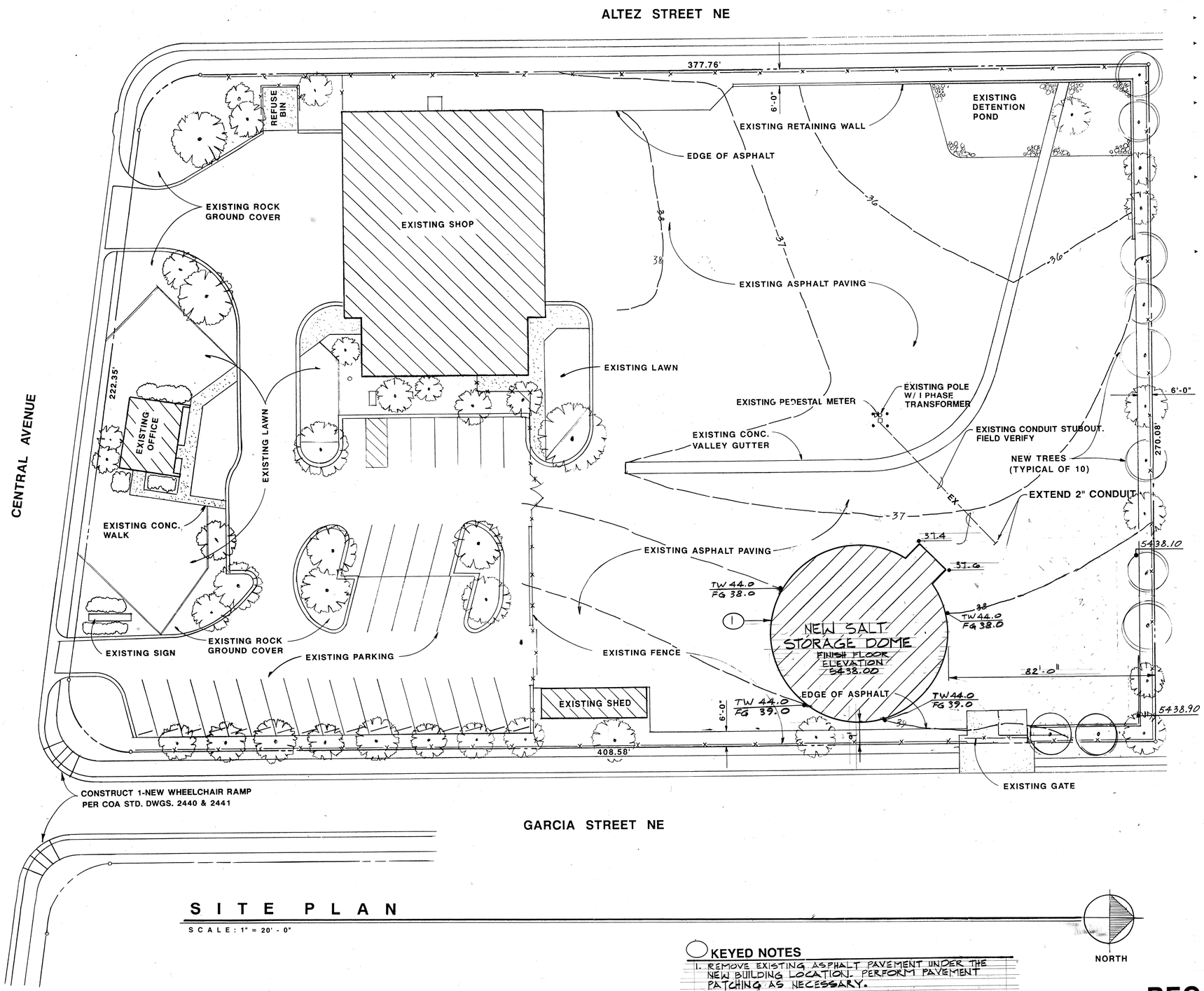

SITE PLAN

SCALE: 1" = 20' - 0"

GENERAL INFORMATION

- SITE DEVELOPMENT CONSISTS OF ADDING NEW SAND/SALT STORAGE BUILDING TO THIS EXISTING SITE.
- LEGAL DESCRIPTION:
  TRACT A BLOCK 3 BUENA VENTURA SUBDIVISION
- SITE
  AREA . . . . . 2.59 AC TOTAL
- EXISTING BUILDINGS
  SHOP . . . . . 8100 SF ±
  OFFICE . . . . . 600 SF ±
  SHED . . . . . 500 SF ±
  TOTAL . 9200 SF

  NEW SALT/SAND BUILDING . . . . . 2275 SF
  TOTAL BUILDING AREA . . . . . 11475 SF
- LANDSCAPE
  EXISTING SITE AREA . . . . . 112820 SF
  MINUS BUILDING AREA . . . . . 11475 SF
  TOTAL . 101345 SF

  REQUIRED LANDSCAPE AREA . . . . . 15202 SF
  (15% x 101345)
  LANDSCAPE AREA PROVIDED . . . . . 19814 SF
- PARKING
  REQUIRED 10
  PROVIDED 34

LEGEND

EXISTING TREES

NEW TREES FRAXINUS AMERICANA 'AUTUMN PURPLE' (AUTUMN PURPLE ASH)
(MIN. 8 FEET HIGH PLANTING SIZE. PROVIDE NEW IRRIGATION BY AUTOMATIC SPRINKLER SYSTEM SEE SPECS.

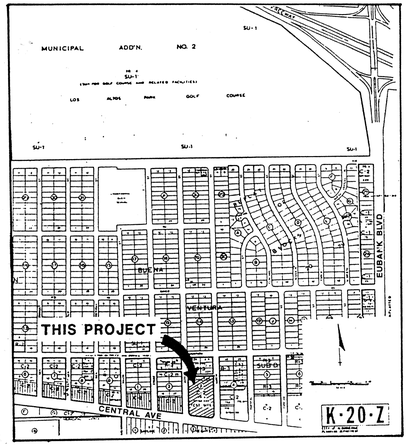

LOCATION MAP

KEYED NOTES

1. REMOVE EXISTING ASPHALT PAVEMENT UNDER THE NEW BUILDING LOCATION. PERFORM PAVEMENT PATCHING AS NECESSARY.

LEGEND

TW TOP OF WALL
FG FINISH GRADE

RECORD SET
David J Larson
1-10-95

AS BUILT INFORMATION
CONTRACTOR: PUMA CONSTRUCTION CO
PROJECT: PUMA CONSTRUCTION CO
WORK STAKED BY: CITY OF ALBUQUERQUE DATE 7/92-
INSPECTED BY: PUMA CONSTRUCTION CO DATE 7/94
ACCEPTANCE BY: DATE
FIELD VERIFICATION BY DATE
AS-BUILT DRAWINGS REVIEWED BY DATE
MICRO-FILM INFORMATION
RECORDED BY DATE
NO

BENCH MARKS
SOUTH BONNET BOLT ON FIRE HYDRANT AT NORTHWEST CORNER OF CENTRAL & GARCIA.
ELEVATION = 5442.82

SURVEY INFORMATION
FIELD NOTES

NO.	BY	DATE
1	COA - M. REYNOLDS	3/6/92
2	COA - M. REYNOLDS	7/31/92

ENGINEER'S SEAL
David J Larson 8-5-93

NO.	DATE	REMARKS	BY
		REVISIONS	

DESIGN
DESIGNED BY GWC DATE 4/23/92
DRAWN BY GWC DATE 4/23/92
CHECKED BY JA DATE 4/23/92

Holmes & Narver

CITY OF ALBUQUERQUE
PUBLIC WORKS DEPARTMENT
ENGINEERING GROUP

TITLE: EAST CENTRAL/WEST CENTRAL SALT STORAGE FACILITY
EAST CENTRAL SITE PLAN

APPROVALS	ENGINEER	DATE	APPROVALS	ENGINEER	DATE
DRC CHAIRMAN	[illegible]	10-28-92	WATER	N/A RWK	10-27-92
TRANSPORTATION	[illegible]	10-28-92	WASTE WATER	N/A RWK	10-27-92
HYDROLOGY	[illegible]	10-27-92			
PARKS & REC					

DRAWING NO. 4344.90 | MAP NO. K20 | SHEET C-11 OF 22

JOB NO. 2778.00

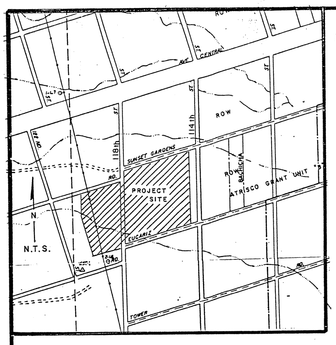

LOCATION MAP
Zone Atlas Map No. L-8

UTILITY COUNSEL LOG NUMBER: 07-21-21-41

LEGAL DESCRIPTION

A certain tract of land situate within projected Section 29, T. 10 N., R. 2 E., N.M.P.M., the Town of Atrisco Grant, Bernalillo County, New Mexico, being all of Lots 2 thru 5, inclusive, Block 6, as the same is shown and designated on the Map entitled PLAT, LANDS OF THE ATRISCO GRANT filed in the Office of the County Clerk, Bernalillo County, New Mexico on March 26, 1962 in Volume D3, Folio 26 and all of Parcel 2, as the same is designated on the Warranty Deed filed in the Office of the County Clerk, Bernalillo County, New Mexico on April 29, 1988 in Volume 369-A, Folios 274 and 275, and the Northerly one-half of Eucariz Road S.W. as the same is designated on the Special Warranty Deed filed in the Office of the County Clerk, Bernalillo County, New Mexico on April 29, 1988 in Volume 369-A, Folios 276 and 277, and that portion of the proposed 118th Street S.W. as Quitclaimed to the City of Albuquerque, New Mexico by Document No. 8899365 and being further described by Grid Bearings and ground distances as follows:

BEGINNING at the northeast corner of the tract herein described, said corner being the northeast corner of Lot 2, Block 6 of said Map and also being a point on the southerly right-of-way of Sunset Gardens Road S.W. as the same road right-of-way is designated on the Quitclaim Deed filed in the Office of the County Clerk, Bernalillo County, New Mexico on November 4, 1988 in Volume D564-A, Page 701, from which point ACS station "REWARD" Bearn N 20°11'10" E, 7723.27 feet; thence along the easterly boundary of said Lot 2, Block 6,
S 00°17'35" W, 1061.58 feet to the southeast corner of the tract herein described, said corner also being the southeast corner of said Lot 2, Block 6; thence along the southerly boundary of said Block 6 and also along the northerly boundary of the Eucariz Road S.W. as the same is shown on said Map,
S 75°00'45" W, 902.20 feet to a point on the southerly boundary of the tract herein described, said point also being the southeast corner of said Parcel 2; thence continuing along the southerly boundary of the tract herein described,
S 00°17'34" W, 31.08 feet to a point on the southerly boundary of the tract herein described, said point also being the southeast corner of said Northerly one-half of Eucariz Road S.W.; thence continuing along the southerly boundary of the tract herein described,
S 75°00'50" W, 524.91 feet to the southwest corner of the parcel herein described; thence, continuing along the westerly boundary of the parcel herein described, also being the easterly boundary of Right-of-Way 9, as the same is shown and designated on the plat of POWER LINE CHANNEL DRAINAGE RIGHTS-OF-WAY filed in the Office of the County Clerk, Bernalillo County, New Mexico on August 3, 1988 in Volume C-37, Folio 28; thence continuing along the westerly boundary of the tract herein described and also along said easterly boundary,
N 11°14'11" W, 620.87 feet to a point; thence leaving said easterly boundary and continuing along the westerly boundary of the tract herein described,
N 00°19'35" E, 411.92 feet to the northwest corner of the tract herein described, said corner also being a point on the southerly boundary of the Sunset Gardens Road S.W. as the same is shown on said Map; thence along the northerly boundary of the tract herein described and also along said southerly boundary,
N 74°53'34" E, 715.91 feet to a point, said point also being a point on the westerly boundary of said Lot 5, Block 6; thence continuing along the northerly boundary of the tract herein described,
N 00°17'35" E, 37.00 feet to a point, said point also being the northwest corner of said Lot 5, Block 6, and also being a point on the southerly boundary of said Sunset Gardens Road S.W.; thence continuing along the said southerly boundary:
N 75°00'47" E, 840.00 feet to the point and place of beginning.

Said tract contains 35.5090 acres, more or less.

SUBDIVISION DATA

1) Case number: DRB 89-345
2) Zone Atlas Map number: L-8
3) Gross acreage: 35.5090 Acres
4) Total lots created: 2 Lots
5) Total mileage of full width streets created: .2 Miles

NOTES

1) Plat was compiled using existing records and actual field survey, all corners of Tract A were set with a No. 5 rebar and yellow plastic cap marked "LS
2) Bearings are State Plane Grid Bearings, Central Zone.
3) Distances, unless designated, are ground distances.
4) Plat shows all easements of record.
5) Record bearings and distances are shown in parenthesis.
6) North one half Eucariz Road acquired by Special Warranty Deed filed April 29, 1988, Volume 369-A, Folios 276-277.
7) The purpose of this Plat is to combine (4) four lots and an unplatted parcel including the 118th Street into (2) two tracts and dedicate additional street right-of-way.

STATION DATA

1) ACS Station "REWARD" is a standard USC & GS brass tablet having New Mexico State Plane, Central Zone coordinates:
N = 1,487,301.42 ; E = 350,944.85
G/G = 0.99967114 ; delta alpha = -00 17'11"

NOTICE OF SUBDIVISION CONDITIONS

A variance or waiver from certain subdivision requirements has been granted by the City and the Albuquerque Metropolitan Arroyo Flood Control Authority in connection with this plat.

The City (and AMAFCA with reference to drainage) may require and/or permit easements to be added, modified or removed when future plats or site development plans are approved.

OWNER'S CERTIFICATE

The undersigned Owner(s) and/or Proprietor(s) do hereby freely consent to all the foregoing and hereby represent that I/we am/are authorized to so act and dedicate the additional street right-of-way as shown hereon and grant easements as shown hereon.
City of Albuquerque
A Municipal Corporation

ARTHUR A. BLUMENFELD
Chief Administrative Officer

ACKNOWLEDGEMENT

STATE OF NEW MEXICO)
) SS
COUNTY OF BERNALILLO)

On this 25th day of June, 1990 the following instrument was acknowledged before me, a Notary Public, by Arthur A. Blumenfeld, Chief Administrative Officer for the City of Albuquerque, New Mexico, a Municipal Corporation, on the behalf of said Municipal Corporations.

MY COMMISSION EXPIRES 4-2-91 NOTARY PUBLIC Elvira Davis

PLAT OF WESTSIDE SATELITE CENTER

BERNALILLO COUNTY, NEW MEXICO
JUNE, 1989

State of New Mexico
County of Bernalillo } SS
This instrument was filed for record on AUG 8 1990 at 10:00 o'clock and was recorded in Vol. 90C Folio 208 of records of said County
Clerk & Recorder
Deputy Clerk

9067505

APPROVED AND ACCEPTED BY:

CITY SURVEYOR	082490 DATE
PLANNING DIRECTOR	8/28/90 DATE
CITY ENGINEER	8/28/90 DATE
A.M.A.F.C.A.	8/28/90 DATE
TRAFFIC ENGINEER	8/3/90 DATE
PROPERTY MANAGER	6/25/90 DATE
UTILITY DEVEL. DIVISION P.W.D.	8-28-90 DATE
PARKS AND RECREATION DEPARTMENT	8/28/90 DATE
COUNTY PUBLIC WORKS	8/23/90 DATE

THIS IS TO CERTIFY THAT TAXES ARE CURRENT AND PAID ON UPC# 1-008-056-114-222-30602 (1)
PROPERTY OWNER OF RECORD: CITY OF ABQ (SEE ON PT)
BERNALILLO COUNTY TREASURER'S OFFICE: Chris Simpson 6-26-90 (2)
1-008-056-154-236-30604 (3)
1-008-056-045-200-30804 (3)

SP-90-154

SURVEYORS CERTIFICATE

I Daniel C. Montano, Professional Surveyor and City Surveyor for the City of Albuquerque, hereby certify that this plat was prepared by me or under my direct supervision, meets the minimum requirements for monumentation and surveys of the Albuquerque Subdivision Ordinace and is true to the best of my knowledge and belief.

Daniel C. Montano
N.M.P.S. No. 5340

082490
DATE

DANIEL C. MONTANO NEW MEXICO 5340 REGISTERED LAND SURVEYOR

DRB-89-345

SHEET 1 OF 2

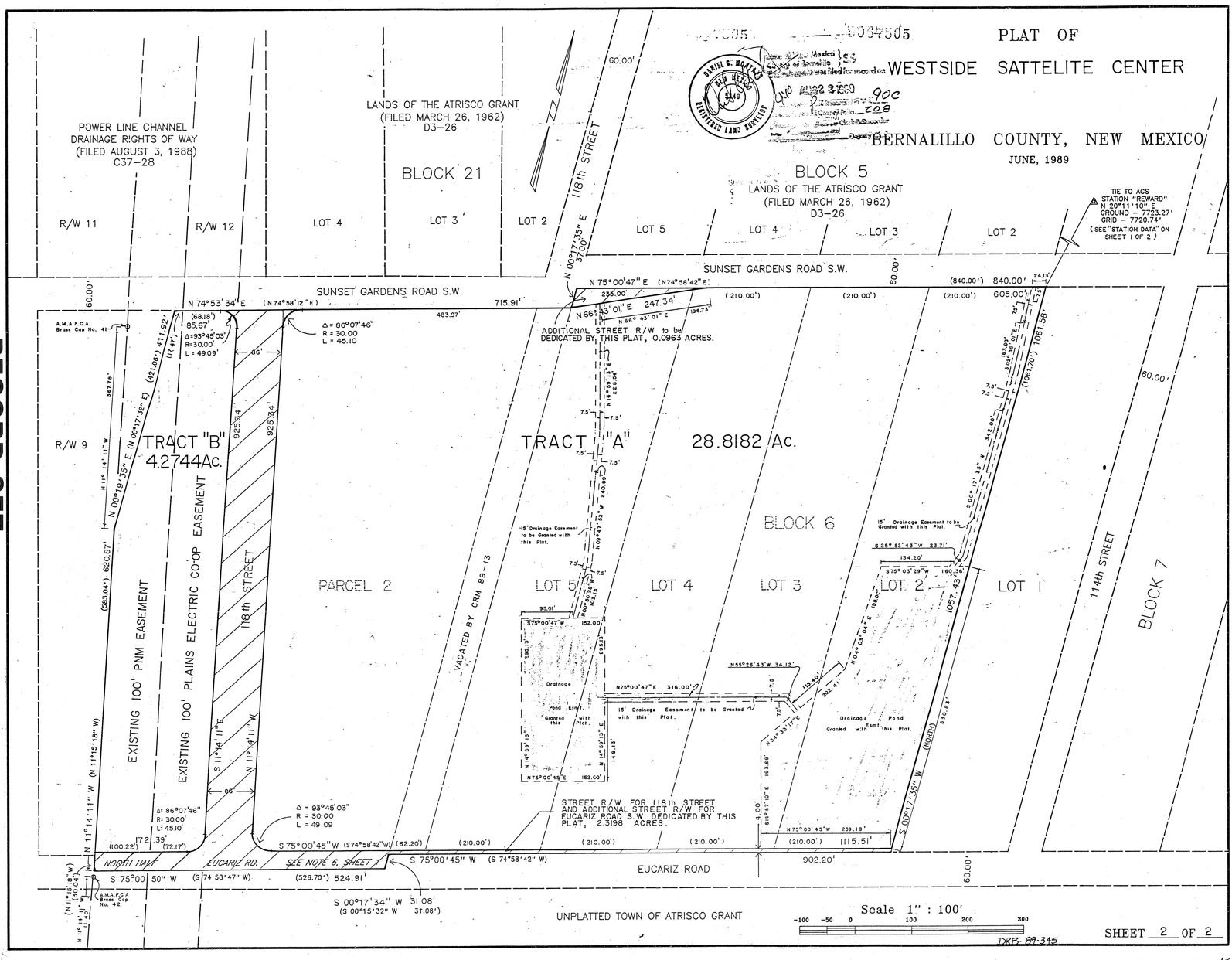

RECORD SET
David J. Kenan
1-10-95

DRAWING NO.	MAP NO.	SHEET	OF
4344.90	L8	R-1	22

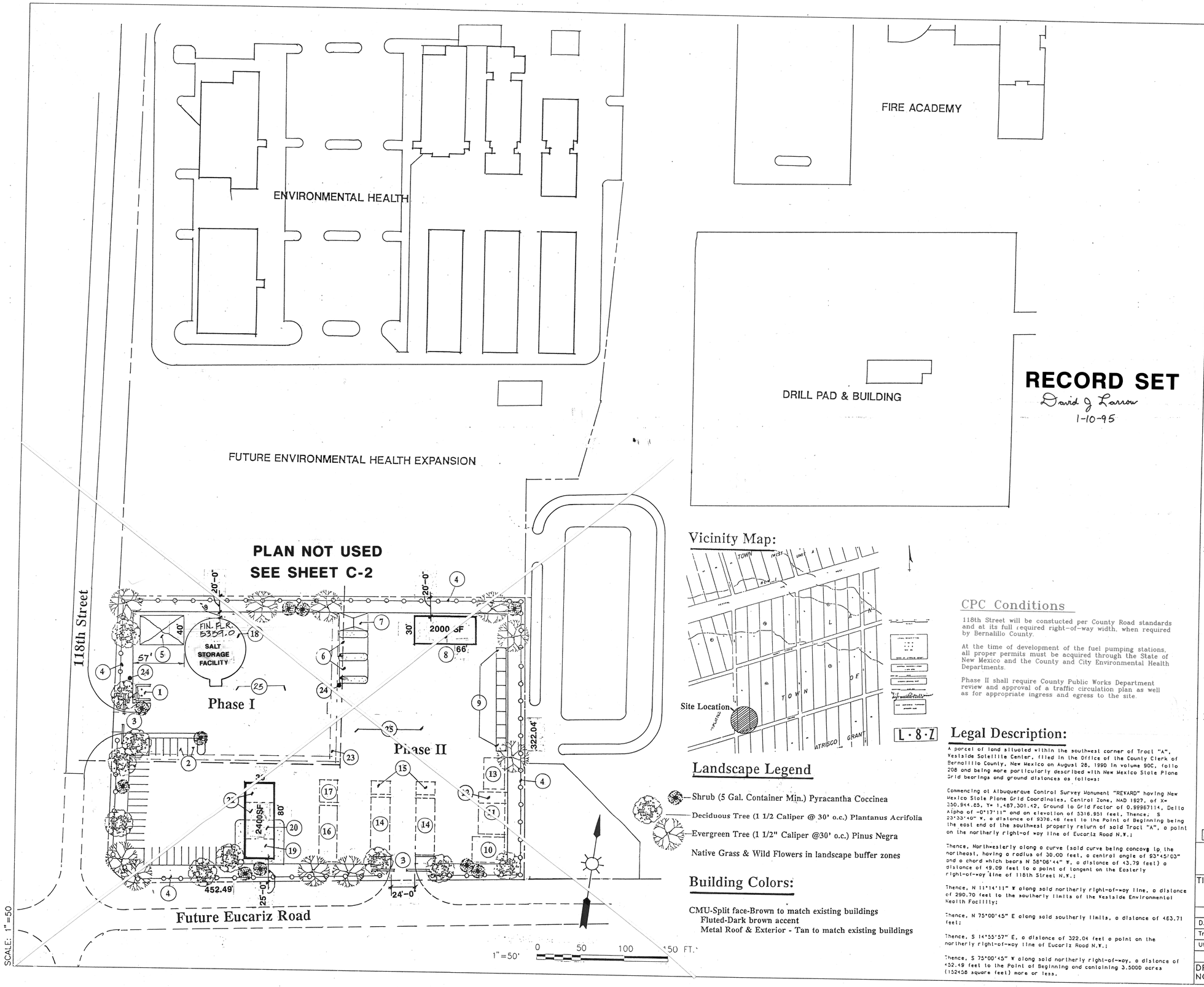

RECORD SET
David J Larrow
1-10-95

Keyed Notes

1 Refuse Container
2 HC Parking, Future
3 Electric Security Gate, Future
4 Wire Fabric Security Fence
5 Asphalt Storage
6 Fuel Island, Future
7 Truck Wash, Future
8 Covered Parking. Future
9 Salt Spreaders & Racks, Future
10 Graders
11 10 YD Dump Trucks
12 Amtrack Truck
13 Rollers
14 5 YD Dump Trucks
15 Sweeper
16 Pick-ups
17 Loaders
18 Salt Storage Building
19 Shower/Locker Rooms, Future
20 Office/Meeting Rooms, Future
21 Open Bay, Future
23 6' Concrete Swale
24 400 Watt High Pressure Sodium Security Light with cut-off luminaire on 30' aluminum pole
25 Asphalt Paving

Notes

Net Site Area: 152.553 square feet

Paved Area: 114,078 square feet

Building Areas: 8275 square feet

Landscaping: 30,200 square feet

Parking: 30 spaces total
28 spaces 20'-0" x 8'-6"
2 spaces 20'-0" x 12'-0" handicapped

Vicinity Map:

CPC Conditions

118th Street will be constucted per County Road standards and at its full required right-of-way width, when required by Bernalillo County.

At the time of development of the fuel pumping stations, all proper permits must be acquired through the State of New Mexico and the County and City Environmental Health Departments.

Phase II shall require County Public Works Department review and approval of a traffic circulation plan as well as for appropriate ingress and egress to the site.

Landscape Legend

Shrub (5 Gal. Container Min.) Pyracantha Coccinea
Deciduous Tree (1 1/2 Caliper @ 30' o.c.) Plantanus Acrifolia
Evergreen Tree (1 1/2" Caliper @30' o.c.) Pinus Negra
Native Grass & Wild Flowers in landscape buffer zones

Building Colors:

CMU-Split face-Brown to match existing buildings
Fluted-Dark brown accent
Metal Roof & Exterior - Tan to match existing buildings

Legal Description:

A parcel of land situated within the southeast corner of Tract "A", Westside Satellite Center, filed in the Office of the County Clerk of Bernalillo County, New Mexico on August 28, 1990 in volume 90C, folio 208 and being more particularly described with New Mexico State Plane Grid bearings and ground distances as follows:

Commencing at Albuquerque Control Survey Monument "REYARD" having New Mexico State Plane Grid Coordinates, Central Zone, NAD 1927, of X= 350,944.85, Y= 1,457,301.42, Ground to Grid Factor of 0.99967114, Delta Alpha of -0°17'11" and an elevation of 5316.851 feet, Thence; S 23°33'40" W, a distance of 9376.46 feet to the Point of Beginning being the east end of the southwest property return of said Tract "A", a point on the northerly right-of way line of Eucariz Road N.W.;

Thence, Northwesterly along a curve (said curve being concave to the northeast, having a radius of 30.00 feet, a central angle of 93°45'03" and a chord which bears N 58°06'44" W, a distance of 43.79 feet) a distance of 49.09 feet to a point of tangent on the Easterly right-of-way line of 118th Street N.W.;

Thence, N 11°14'11" W along said northerly right-of-way line, a distance of 290.70 feet to the southerly limits of the Westside Environmental Health Facility;

Thence, N 75°00'45" E along said southerly limits, a distance of 463.71 feet;

Thence, S 14°55'57" E, a distance of 322.04 feet a point on the northerly right-of-way line of Eucariz Road N.W.;

Thence, S 75°00'45" W along said northerly right-of-way, a distance of 452.49 feet to the Point of Beginning and containing 3.5000 acres (152458 square feet) more or less.

AS BUILT INFROMATION

CONTRACTOR	PUMA CONSTRUCTION CO CITY OF ALBUQUERQUE
WORK STAKED BY	PUMA CONSTRUCTION CO
INSPECTED BY	CITY OF ALBUQUERQUE DATE 7/92-7/94
ACCEPTANCE BY	DATE
FIELD VERIFICATION BY	DATE
DRAWINGS CORRECTED BY	DATE

MICRO-FILM INFORMATION

RECORDED BY	DATE
NO.	

BENCH MARKS

SURVEY INFORMATION
FIELD NOTES

NO.	BY	DATE
1	COA - M. REYNOLDS	3/6/92
2	COA - M. REYNOLDS	7/31/92

ENGINEER'S SEAL

NO.	DATE	REMARKS	BY

REVISIONS

DESIGN

DESIGNED BY:	PR	DATE: 10/92
DRAWN BY:	JM	DATE: 10/92
CHECKED BY:	LB	DATE: 10/92

HOLMES & NARVER, INC.

CITY OF ALBUQUERQUE
PUBLIC WORKS DEPARTMENT
ENGINEERING GROUP

TITLE: WESTSIDE SATELLITE CENTER
PROPOSED STREET MAINTENANCE FACILITY
SITE DEVELOPMENT PLAN

APPROVALS	ENGINEER	DATE	APPROVALS	ENGINEER	DATE
D.R.C. Chair					
Trans. Dev.					
Utility Dev.					

DRAWING NO.	MAP NO.	SHEET	OF
4344.90	L8	R-2	22

ORIGINAL
DWG: N:\CAD\2431.00\N:ABQ-100
ORIGINAL
TIME: 12-16-91 15:25:40

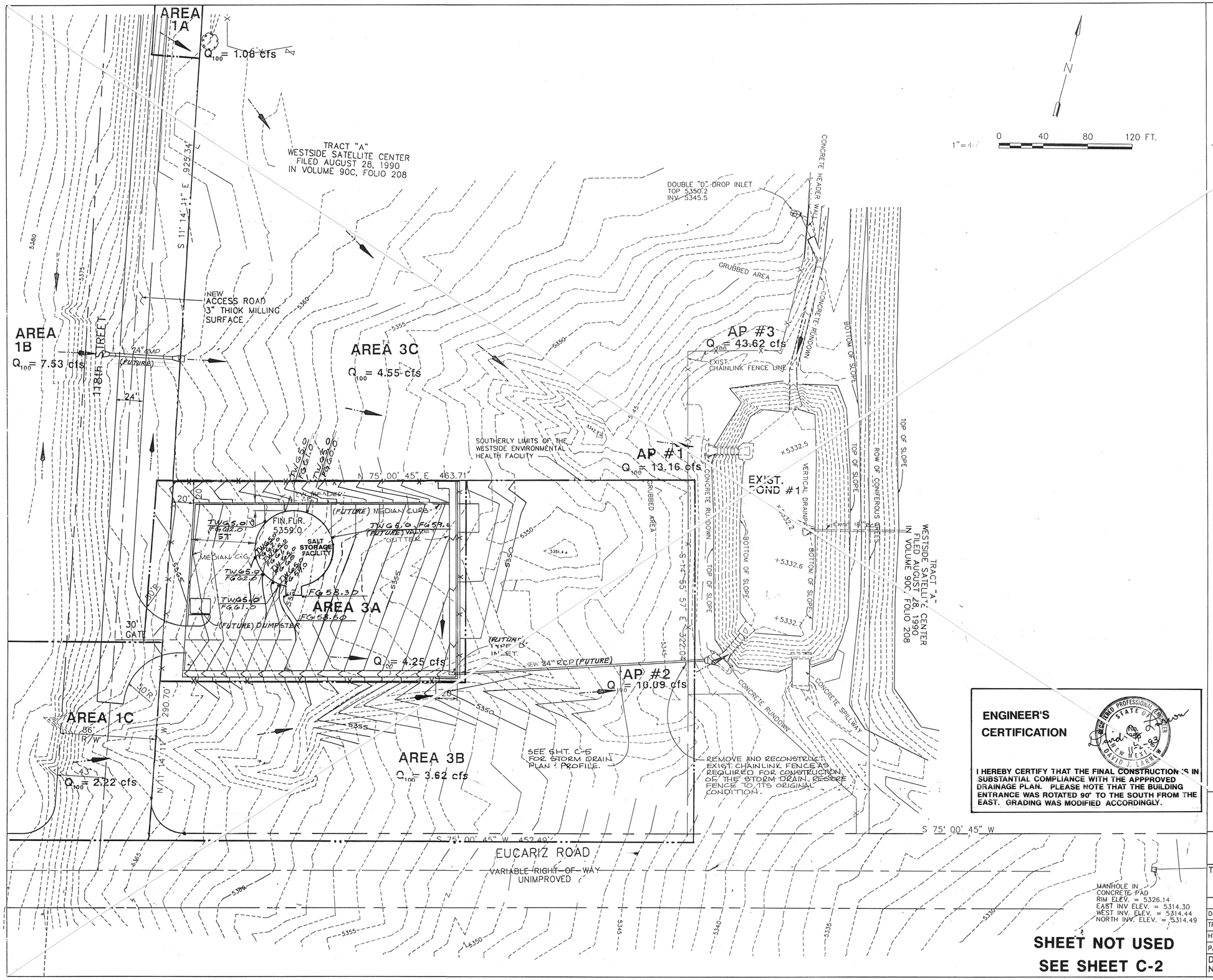

LEGEND

- DIRECTION OF FLOW
- DRAINAGE BASIN BOUNDARY
- NEW CONTOUR
- EXISTING CONTOUR
- RIGHT OF WAY
- CENTERLINE
- —x—x— CHAINLINK FENCE
- TW TOP OF WALL
- FG FINISH GRADE

ENGINEER'S CERTIFICATION

I HEREBY CERTIFY THAT THE FINAL CONSTRUCTION IS IN SUBSTANTIAL COMPLIANCE WITH THE APPPROVED DRAINAGE PLAN. PLEASE NOTE THAT THE BUILDING ENTRANCE WAS ROTATED 90° TO THE SOUTH FROM THE EAST. GRADING WAS MODIFIED ACCORDINGLY.

REGISTERED PROFESSIONAL ENGINEER — STATE OF NEW MEXICO — DAVID J. LARSON — 11-2-93

RECORD SET

David J Larson
11-2-93

Holmes & Narver

CITY OF ALBUQUERQUE
PUBLIC WORKS DEPARTMENT
ENGINEERING GROUP

TITLE: EAST CENTRAL/WEST CENTRAL SALT STORAGE FACILITIES
GRADING AND DRAINGE PLAN

APPROVALS	ENGINEER	DATE	APPROVALS	ENGINEER	DATE
DRC CHAIRMAN		10-28-92	WATER	N/A RWK	10-27-92
TRANSPORTATION	N/A RWK	10-28-92	WASTE WATER	N/A RWK	10-27-92
HYDROLOGY		10-27-92			
PARKS & REC					

DRAWING NO.	MAP NO.	SHEET	OF
4344.90	L8	R-3	20

SHEET NOT USED
SEE SHEET C-2

AS BUILT INFROMATION
CONTRACTOR PUMA CONSTRUCTION CO
STATED BY PUMA CONSTRUCTION CO DATE 7/92
WORK INSPECTED BY CITY OF ALBUQUERQUE DATE 7/94
ACCEPTANCE BY DATE
FIELD VERIFICATION BY DATE
DRAWINGS CORRECTED BY DATE
MICRO-FILM INFORMATION
RECORDED BY DATE
NO.

BENCH MARKS
HORIZ. – "REWARD" ACS STATION
USC &GRASS TABLE"
NM STATE PLANE – CENTRAL ZONE
E = 350,944.85 N = 1,487,301.42
G/G = 0.99967114
DELTA ALPHA = 00° 17' 11"
VERT. – 1" REBAR ELEV. 5305.73
SE CORNER OF EUCARIZ 210'±

SURVEY INFORMATION
FIELD NOTES

NO.	BY	DATE
1	COA – M. REYNOLDS	3/6/92
2	COA – M. REYNOLDS	7/31/92

ENGINEER'S SEAL
David J Larson 8-5-93

NO.	DATE	REMARKS	BY
		REVISIONS	
		DESIGN	

DESIGNED BY: DJL/PWT DATE: 10/92
DRAWN BY: PWT DATE: 10/92
CHECKED BY: DJL DATE: 10/92

DWG: J:\CAD\277800\J:2778C10 TIME: 09-24-92 10:30:57

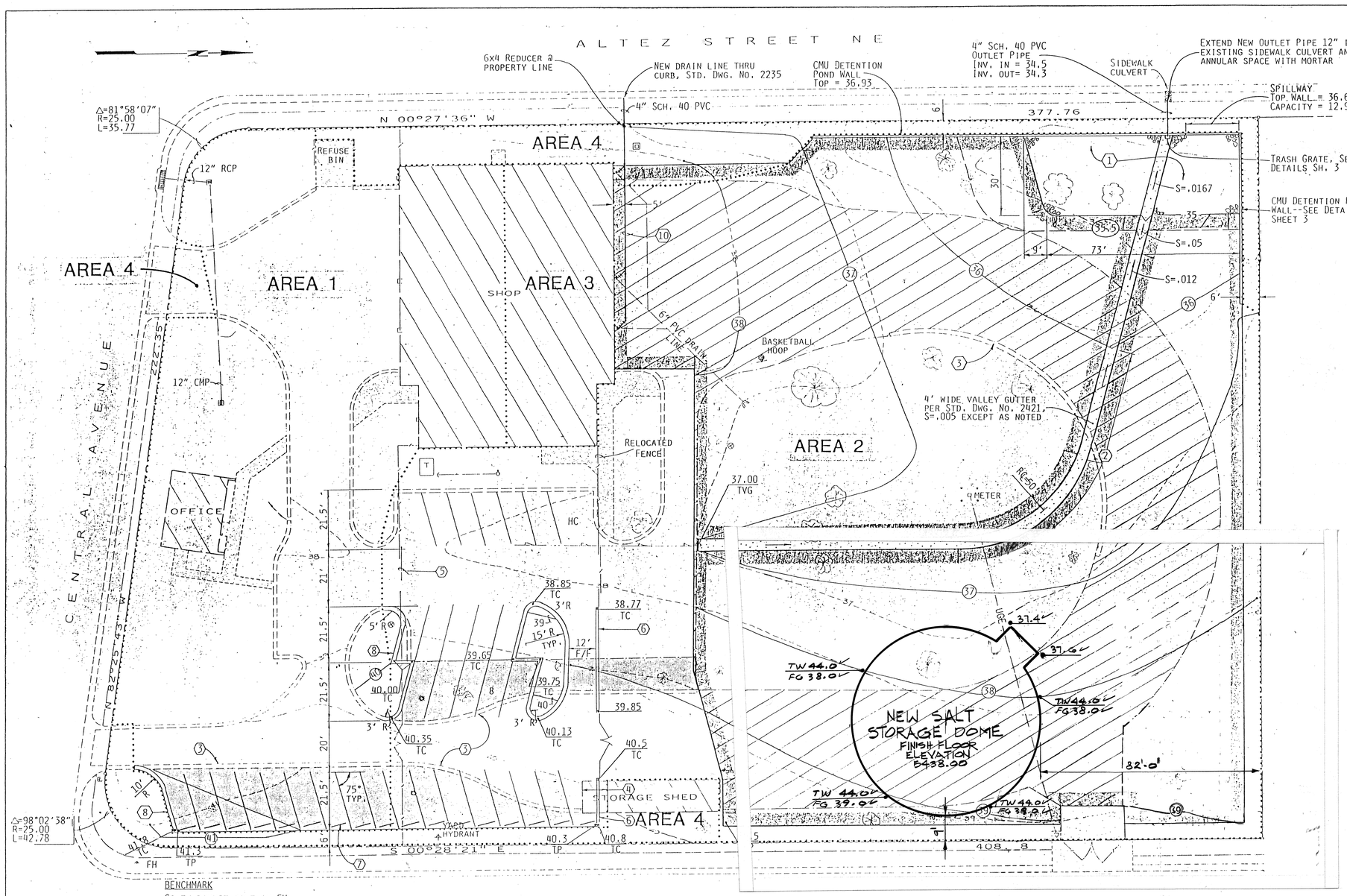

BENCHMARK
SOUTH BONNET BOLT ON FH
ELEV = 5442.82

NOTE: POND WATER LEVELS (AREA 2)
10 YR. STORM = 36.1
100 YR. STORM= 36.6

ENGINEER'S CERTIFICATION

REGISTERED PROFESSIONAL ENGINEER STATE OF NEW MEXICO DAVID J. LARROW

David J. Larrow 10-27-93

I HEREBY CERTIFY THAT THE FINAL CONSTRUCTION IS IN SUBSTANTIAL COMPLIANCE WITH THE APPROVED DRAINAGE PLAN. AS NOTED ON THE PLAN THE FINISH GRADE ELEVATIONS MATCH THE DESIGN ELEVATIONS.

DRAINAGE CRITERIA

CRITERIA SHALL CONFORM TO THE CRITERIA USED FOR THE ORIGINAL DRAINAGE PLAN AS FOLLOWS:

1. 100-YR. DEVELOPED RUNOFF RATE SHALL NOT EXCEED THE 5-YR. UNDEVELOPED RUNOFF RATE
2. DETENTION PONDING SHALL BE PROVIDED FOR THE DIFFERENCE BETWEEN THE 6-HR. DEVELOPED AND UNDEVELOPED RUNOFF VOLUME

UNDEVELOPED CONDITIONS

AREA = 113,024 SQ. FT. (2.59 AC.)
HYDROLOGIC SOIL GROUP B
COEFFICIENT OF RUNOFF, C = 0.34
100-YR. 6-HR. RAINFALL = 2.40"
5-YR. 6-HR. RAINFALL = 2.40 X 0.541 = 1.3"
5-YR. RAINFALL INTENSITY, I = 1.30 X 2.11 = 2.74"/HR.
Q 5-YR. = CIA = .34 X 2.74 X 2.59 = 2.41 CFS
CN = 70
Q = .45"
V 100-YR. = QA = .45 ÷ 12 X 113,024 = 4238 CU. FT.

AMENDED DEVELOPED CONDITIONS

Q 100-YR. RATES:
AREA 1, CONTROLLED DISCHARGE (UNCHANGED)=.97 CFS
AREA 2, CONTROLLED DISCHARGE, 4" OUTLET PIPE (FOR 2.1' HEAD) =.70 CFS
AREA 3, FREE DISCHARGE:
Q = CIA = .90 X 5.06 X .095 =.43 CFS
AREA 4, FREE DISCHARGE:
Q = CIA = .35 X 5.06 X .17 =.30 CFS
2.40 CFS
OK

V 100-YR. CALCULATIONS:

AREA NO.	AREA (SF)	IMPERVIOUS PERCENT	CN	Q (IN.)	VOLUME (CU. FT.)
1	27,511	64	87	1.25	2,866
2	74,173	94	96	1.95	12,053
3	4,112	100	100	2.40	822
4	7,228	15	74	.55	331
					16,072

REQ'D PONDING: 16,072 - 4,238 = 11,384 CU. FT.

PONDING VOLUME CALCULATIONS (AREA 2)

ELEVATION	AREA (SF)	AVG. AREA (SF)	DEPTH (FT)	VOLUME (CF)
34.5	0	--	--	--
35.0	2,880	1,440	.5	720
35.5	3,780	3,330	.5	1,665
36.0	6,900	5,340	.5	2,670
36.5	13,380	10,140	.5	5,070
36.6	14,940	14,160	.1	1,416
				11,541 CU. FT.

PONDING AVAILABLE

AREA 1 (ORIGINAL PLAN UNCHANGED) = 1,736 CU. FT.
AREA 2 =11,541 "
13,277 "
OK >11,384 "

LEGEND OF EXISTING IMPROVEMENTS

- BUILDING DOWNSPOUT
- SPRINKLER VALVE
- 5' CLF W/3 STRAND BARBED WIRE
- 18" CURB & GUTTER
- GATE OPERATOR
- TRANSFORMER
- TREES
- ASPHALT LIMITS
- CONCRETE
- SEDIMENT TRAP
- POWER POLE WITH GUY WIRE & UG LINE

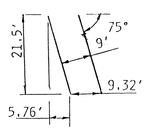

TYPICAL PARKING STALL

RECORD SET
David J. Larrow
10-28-93

AMENDED DRAINAGE PLAN

SCALE: 1" = 20'

NEW SALT STORAGE BUILDING IMPROVEMENTS

1. ALL ROOF DRAINAGE WILL FLOW TO THE WEST SIDE OF OF THE BUILDING.
2. THESE IMPROVEMENTS DO NOT MATERIALLY CHANGE THE EXISTING DRAINAGE PATTERN.

REGISTERED PROFESSIONAL ENGINEER STATE OF NEW MEXICO No. 8856 DAVID J. LARROW
David J. Larrow 8-5-93

LEGEND

- 41.3 / TP — TOP OF PAVEMENT GRADE
- 41.8 / TC — TOP OF CURB GRADE
- 37.00 / TVG — TOP OF VALLEY GUTTER GRADE
- EXISTING ASPHALT TO BE REMOVED
- NEW 2" ASPHALTIC CONCRETE PAVEMENT
- NEW 4" ASPHALTIC CONCRETE PAVEMENT (BORDER ONLY)

Holmes & Narver

CITY OF ALBUQUERQUE
PUBLIC WORKS DEPARTMENT
ENGINEERING GROUP

EAST CENTRAL/WEST CENTRAL SALT STORAGE FACILITY EAST CENTRAL AMENDED DRAINAGE PLAN

APPROVALS	ENGINEER	DATE	APPROVALS	ENGINEER	DATE
D.R.C. Chair	J.J. Gallaby	10-28-92	Water	N/A RWK	10-27-92
Trans. Dev.	N/A RWK	10-28-92	Waste Water	N/A RWK	10-27-92
Hydrology	[illegible]	10-27-92			

PROJECT NO. 4344.90 | MAP NO. K20 | SHEET R-4 OF 22

AS BUILT INFORMATION
CONTRACTOR PUMA CONSTRUCTION CO
WORK STAKED BY PUMA CONSTRUCTION CO DATE 7/92-7/94
INSPECTOR CITY OF ALBUQUERQUE
FIELD VERIFICATION BY DATE
DRAWINGS REVISED BY DATE
DRAWINGS CORRECTED BY DATE
RECORDED BY DATE

BENCH MARKS
SOUTH BONNET BOLT ON FIRE HYDRANT @ NW CORNER CENTRAL & GARCIA.
ELEVATION = 5442.82

SURVEY INFORMATION
FIELD NOTES

NO.	BY	DATE
1	J. GUTIERREZ	2/91

REVISIONS

NO.	DATE	REVISIONS	BY
1	4/91		
2	4/91		
3	4/91		

DESIGNED BY
DRAWN BY
CHECKED BY

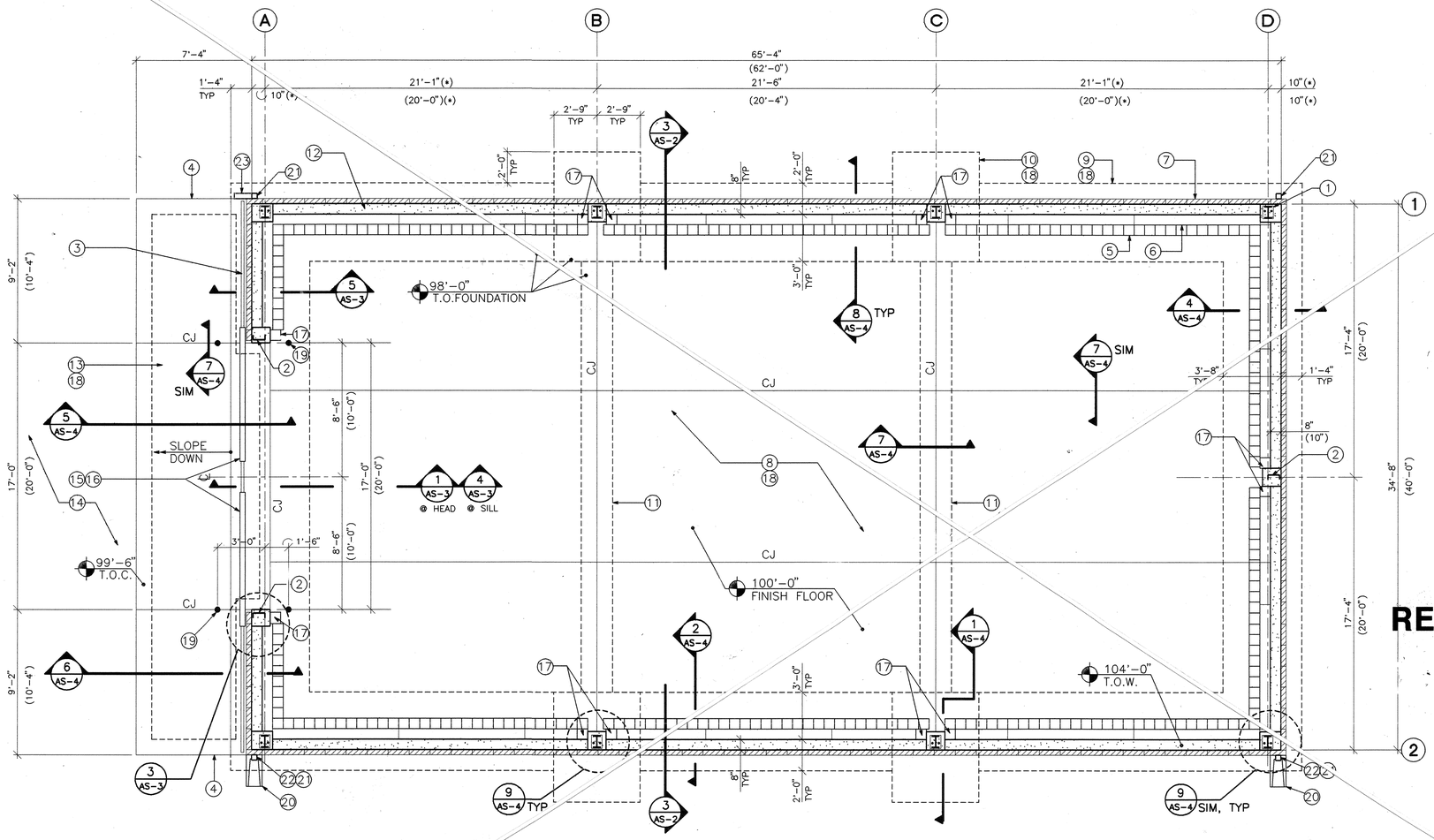

FOUNDATION/FLOOR PLAN

SCALE: 1/4" = 1'-0"

GENERAL NOTES

A. FINISH FLOOR ELEVATION AT EAST CENTRAL SITE 100'-0" = ACTUAL ELEVATION 5438'-0"
FINISH FLOOR ELEVATION AT WEST CENTRAL SITE 100'-0" = ACTUAL ELEVATION 5359'-0"

B. DIMENSIONS FOR THE EAST CENTRAL SITE SHOWN ON PLAN. DIMENSIONS FOR THE WEST CENTRAL SITE SHOWN IN PARENTHESES.

C. DIMENSIONS MARKED THUS (*) MAY VARY ACCORDING TO THE CHOSEN METAL BUILDING SYSTEM.

D. SEE SHEET AS-2 FOR FINISH MATERIALS.

E. COLUMN PIERS AND FOUNDATIONS SHOWN AT THE METAL BUILDING COLUMN LOCATIONS SHALL BE VERIFIED BY THE CONTRACTOR AS ADEQUATE TO SUPPORT THE ANTICIPATED STRUCTURE DEAD LOADS AND LIVE LOADS DEFINED ON THESE DRAWINGS. MODIFICATIONS TO THE FOUNDATIONS SHALL BE SUBMITTED TO THE ENGINEER FOR APPROVAL.

F. FRP = FIBER-REINFORCED PLASTIC, SEE SPECIFICATIONS.

STRUCTURAL DESIGN CRITERIA

I. LIVE LOADS

A. ROOF: 20 PSF

B. INTERIOR FLOOR SLAB: 2 KSF MAXIMUM OR 5-TON VEHICLE AXLE LOAD

C. SEISMIC: 1991 UBC, ZONE 2B

$V = \frac{ZIC}{Rw} W$ Z=.20 I=1.0 C=2.75 Rw=6

D. WIND: 1991 UBC
1. BASIC WIND SPEED: 80 MPH
2. EXPOSURE: C
3. IMPORTANCE FACTOR: 1.0

E. SOIL PARAMETERS: PER "GEOTECHNICAL INVESTIGATION REPORT - ROAD SALT STORAGE FACILITY, EUCARIZ ROAD & 118th STREET NW, ALBUQUERQUE, NM", JULY 31, 1992 PREPARED BY SERGENT, HAUSKINS & BECKWITH
1. VERTICAL BEARING: 2500 PSF DL+LL W/ 1/3 INCREASE FOR DL+LL+WIND OR SEISMIC
2. LATERAL PASSIVE: 350 PCF
3. SLIDING FRICTION: 0.35

II. MATERIALS

A. CONCRETE: f'c = 4000 PSI @ 28 DAYS

B. REINFORCING STEEL: ASTM A615, GRADE 60

C. ANCHOR BOLTS: ASTM A307

D. STEEL PIPE: ASTM A53, GRADE B

SEE SHEET 22 FOR STRUCTURE.

KEYED NOTES

1. MAIN BUILDING COLUMN AND BASEPLATE BY OTHERS. TYP FOR 8.
2. WIND COLUMN AND BASEPLATE BY OTHERS. TYP FOR 3.
3. GALV. EMBEDDED SCHEDULE 40 PIPE FOR SUPPORT OF SLIDING DOOR. ACTUAL SUPPORT SYSTEM MAY VARY DEPENDING ON CHOSEN METAL BUILDING SYSTEM REQUIREMENTS.
4. ASPHALT PAVEMENT SURFACE TO MATCH SLOPE OF CONCRETE APPROACH RAMP TO PROVIDE DRAINAGE AWAY FROM BUILDING
5. VERTICAL RAILROAD TIES, 4'-0" LONG, LAG BOLTED TO HORIZONTAL RAILROAD TIES.
6. HORIZONTAL RAILROAD TIES BOLTED TO CONCRETE WALL.
7. 4" CMU VENEER
8. 9" CONCRETE SLAB WITH #5 @ 12 EACH WAY IN TOP AND BOTTOM LAYERS. PROVIDE 2" CLEAR TOP LAYER AND 3" CLEAR BOTTOM LAYER.
9. 1'-0" x 5'-0" FOUNDATION AROUND PERIMETER, CONTINUE REINFORCING THROUGH COLUMN FOUNDATION. SEE GENERAL NOTE E.
10. 2'-0" x 5'-6" x 7'-0" COLUMN FOUNDATION, TYPICAL 4 PLACES. SEE GENERAL NOTE E.
11. 1'-0" x 2'-0" TIE BEAM W/ 2 - #5 CONTINUOUS INTO COLUMN FOUNDATIONS.
12. CONCRETE WALL TO 4'-0" A.F.F.
13. CONCRETE RAMP.
14. ASPHALT PAVEMENT.
15. PR 8'-6"x 16'-0" SLIDING DOORS AT EAST CENTRAL SITE.
16. PR 10'-0"x 16'-0" SLIDING DOORS AT WEST CENTRAL SITE.
17. VERTICAL RAILROAD TIE EA. SIDE OF CONCRETE COLUMN PIER. BOLT TO CONCRETE W 3/4"ø FRP BOLT SEE DETAIL 8/AS-4 SIM.
18. FOR TYP. SUBGRADE PREPARATION UNDER FOUNDATIONS AND FLOOR SLABS, SEE 10/AS-4.
19. PIPE BOLLARD, SEE 8/AS-3
20. CONCRETE SPLASH BLOCKS @ WEST CENTRAL SITE, TYPICAL OF 2
21. DOWNSPOUTS, TYPICAL OF 4 @ WEST CENTRAL SITE
22. DOWNSPOUTS, TYPICAL OF 2 @ SOUTH SIDE OF BLDG @ EAST CENTRAL SITE
23. DOWNSPOUT, ONE @ NORTHWEST CORNER OF BLDG @ EAST CENTRAL SITE. DIRECT FLOW TOWARD WEST

RECORD SET

David J Larson
1-10-95

AS BUILT INFROMATION
CONTRACTOR: PIMA CONSTRUCTION CO
CONSULTANT: CITY OF ALBUQUERQUE
REVIEWED BY: PIMA CONSTRUCTION CO DATE 7/22
REVIEWED BY: CITY OF ALBUQUERQUE DATE 7/24
INSPECTOR'S NOTES: DATE
FIELD VERIFICATION BY: DATE
DRAWINGS CORRECTED BY: DATE
MICRO-FILM INFORMATION
RECORDED BY: DATE
NO.

BENCH MARKS

SURVEY INFORMATION
FIELD NOTES

NO.	BY	DATE
1	COA - M. REYNOLDS	3/6/92
2	COA - M. REYNOLDS	7/31/92

ENGINEER'S SEAL

NO.	DATE	REMARKS	BY

REVISIONS

DESIGN
DESIGNED BY: R. A. EHLERT DATE: 10/92
DRAWN BY: B. ROENSCH DATE: 10/92
CHECKED BY: DATE: 10/92

HN Holmes & Narver

CITY OF ALBUQUERQUE
PUBLIC WORKS DEPARTMENT
ENGINEERING GROUP

TITLE: EAST CENTRAL/WEST CENTRAL SALT STORAGE FACILITY FOUNDATION/FLOOR PLAN

APPROVALS	ENGINEER	DATE	APPROVALS	ENGINEER	DATE
DRC CHAIRMAN	[illegible] NP	10-28-92	WATER	N/A RWK	10-27-92
TRANSPORTATION	N/A CWD	10-28-92	WASTE WATER	N/A RWK	10-27-92
HYDROLOGY	N/A				
PARKS & REC					

DRAWING NO. 4344.90 MAP NO. SHEET AS-1 OF 22

DWG: J:\CAD\277800\JAS-1 TIME: 09-29-92 07:12:14
plot scale: 1/4"=1'-0"

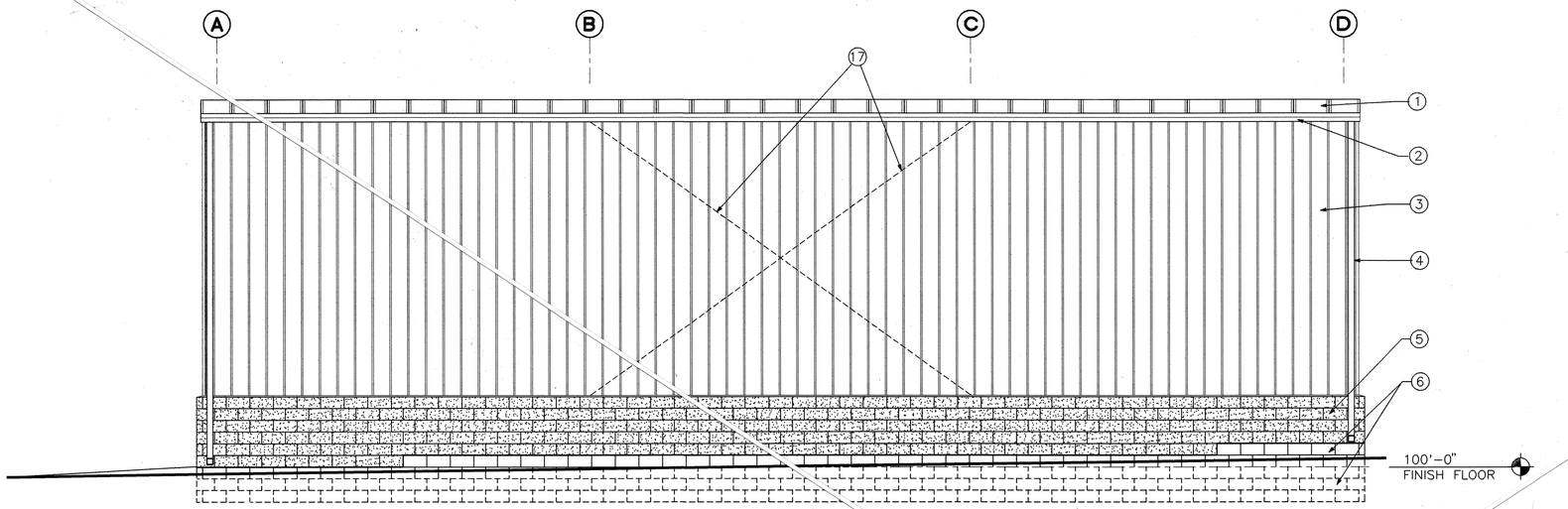

SOUTH ELEVATION @ EAST CENTRAL SITE (NORTH ELEVATION SIMILAR)
NORTH ELEVATION @ WEST CENTRAL SITE (SOUTH ELEVATION SIMILAR)

SCALE: 1/4" = 1'-0"

1 / AS-2

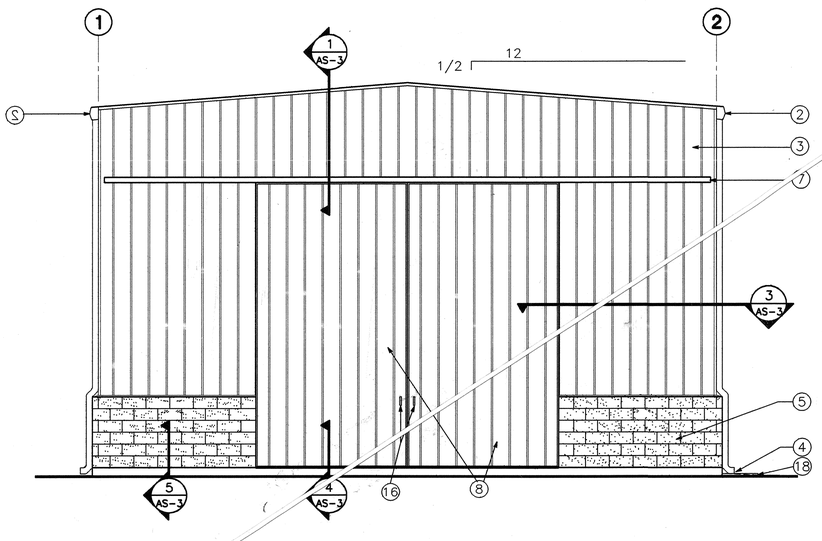

WEST ELEVATION @ EAST CENTRAL SITE (EAST ELEVATION SIMILAR)
EAST ELEVATION @ WEST CENTRAL SITE (WEST ELEVATION SIMILAR)

SCALE: 1/4" = 1'-0"

2 / AS-2

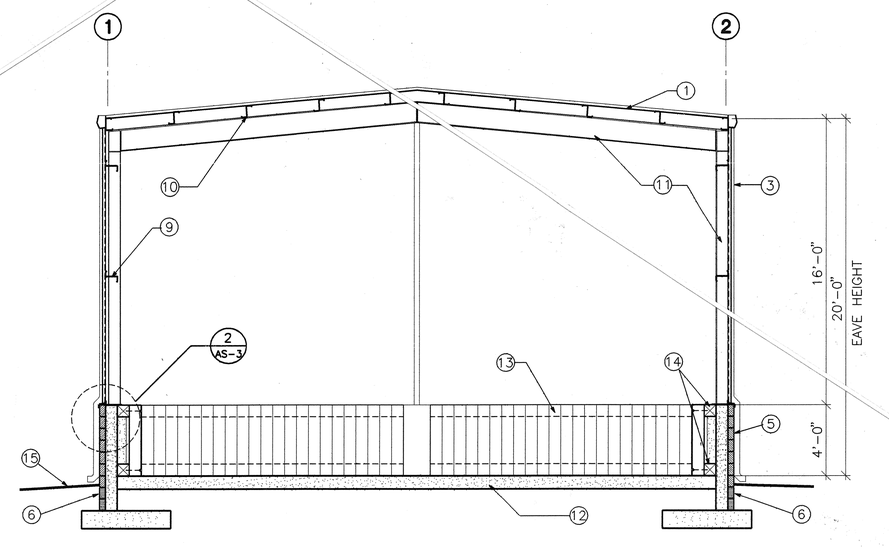

BUILDING SECTION

SCALE: 1/4" = 1'-0"

3 / AS-1

NOTE:
SEE DETAIL 10 / AS-4 FOR TYPICAL SUBGRADE PREPARATION UNDER SLAB AND FOUNDATIONS

SEE SHEET 22 FOR STRUCTURE.

RECORD SET

David J Larson
1-10-95

○ KEYED NOTES

1. METAL RIBBED PANEL ROOFING.
2. CONTINUOUS METAL GUTTER.
3. METAL RIBBED PANEL SIDING.
4. DOWNSPOUTS. REF AS-1 FOR QUANTITY & LOCATIONS.
5. 4" SPLIT FACED CMU VENEER.
6. 4" CMU VENEER (PLAIN BLOCK) BELOW GRADE.
7. SLIDING DOOR TRACK.
8. PR 8'-6" x 16'-0" SLIDING DOORS @ EAST CENTRAL SITE; PR 10'-0" x 16'-0" SLIDING DOORS @ WEST CENTRAL SITE.
9. METAL BUILDING GIRT.
10. METAL BUILDING PURLIN.
11. METAL BUILDING RIGID FRAME.
12. 9" CONCRETE SLAB.
13. VERTICAL RAILROAD TIES 4'-0" A.F.F. LAG BOLTED TO HORIZONTAL RAILROAD TIES.
14. HORIZONTAL RAILROAD TIES, BOLTED TO CONCRETE WALL.
15. ASPHALT PAVEMENT.
16. PULL HANDLES
17. TIE ROD CROSS BRACING TYPICAL @ COLUMN LINES #1 AND #2
18. CONCRETE SPLASH BLOCK. TYPICAL OF 2 @ WEST CENTRAL SITE.

GENERAL NOTES

A. METAL BUILDING, METAL BUILDING DOOR, AND METAL BUILDING COMPONENTS BY OTHERS.

B. FINISHES:
WALL PANEL TO MATCH BUTLER-TONE COATING SYSTEM EXTERIOR COLOR IVORY CREAM

ROOF PANEL TO MATCH BUTLER-TONE COATING SYSTEM EXTERIOR COLOR BRONZE

CMU SPLIT-FACE VENEER TO MATCH EXISTING BUILDINGS @ EAST/WEST SITES

AS BUILT INFROMATION

CONTRACTOR	PIMA CONSTRUCTION CO	
INSPECTOR	CITY OF ALBUQUERQUE	
STAKED BY	CITY OF ALBUQUERQUE	DATE 7/92
INSPECTOR'S ACCEPTANCE BY		DATE 7/94
FIELD VERIFICATION BY		DATE
DRAWINGS CORRECTED BY		DATE

MICRO-FILM INFORMATION

RECORDED BY	DATE
NO.	

BENCH MARKS

SURVEY INFORMATION

FIELD NOTES

NO.	BY	DATE
1	COA - M. REYNOLDS	3/6/92
2	COA - M. REYNOLDS	7/31/92

ENGINEER'S SEAL

STATE OF NEW MEXICO — JOSEPH E. SEALOVE — 5985 — REGISTERED ARCHITECT

NO.	DATE	REMARKS	BY

REVISIONS

DESIGN	DATE: 10/92	
DESIGNED BY: R. A. EHLERT	DATE: 10/92	
DRAWN BY: B. ROENSCH	DATE: 10/92	
CHECKED BY:		

HN Holmes & Narver

CITY OF ALBUQUERQUE
PUBLIC WORKS DEPARTMENT
ENGINEERING GROUP

TITLE: EAST CENTRAL/WEST CENTRAL SALT STORAGE FACILITY ELEVATIONS/SECTION

APPROVALS	ENGINEER	DATE	APPROVALS	ENGINEER	DATE
DRC CHAIRMAN	J.E. Sealove	10-28-92	WATER	N/A RWK	10-27-92
TRANSPORTATION	N/A RHO	10-27-92	WASTE WATER	N/A RWK	10-27-92
HYDROLOGY	N/A				
PARKS & REC					

DRAWING NO. 4344.90 | MAP NO. | SHEET AS-2 OF 22

plot scale: 1/4"=1'-0"

DWG: J:\CAD\277800\J-AS-2 TIME: 09-29-92 07:19:36

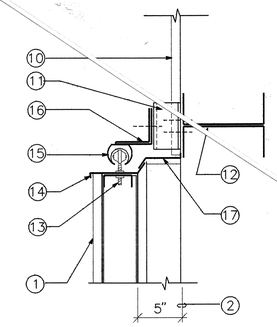

DETAIL DOOR TRACK @ HEAD (1 / AS-1/AS-2)
SCALE: 1 1/2" = 1'-0"

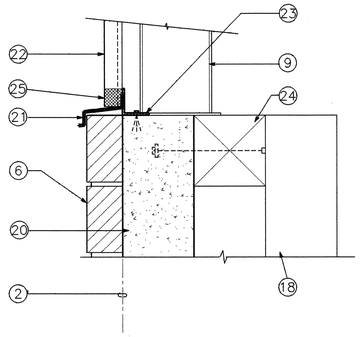

DETAIL @ TOP OF CONCRETE WALL (2 / AS-2)
SCALE: 1 1/2" = 1'-0"

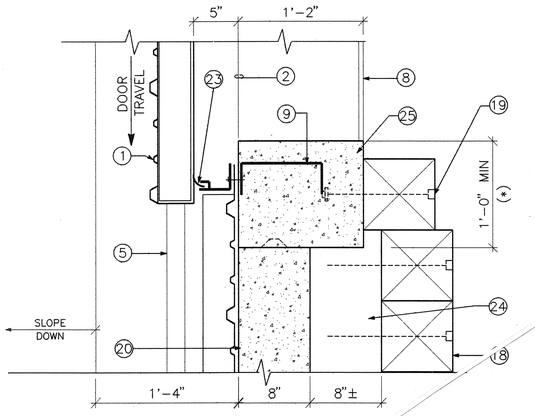

DETAIL @ DOOR JAMB (3 / AS-1/AS-2)
SCALE: 1 1/2" = 1'-0"

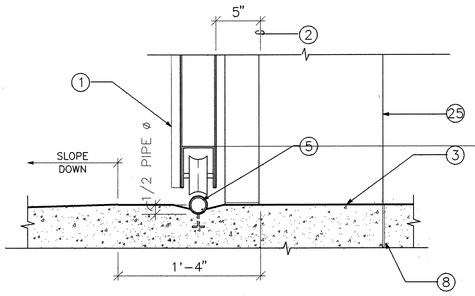

DETAIL DOOR TRACK @ DOOR OPENING (4 / AS-1/AS-2)
SCALE: 1 1/2" = 1'-0"

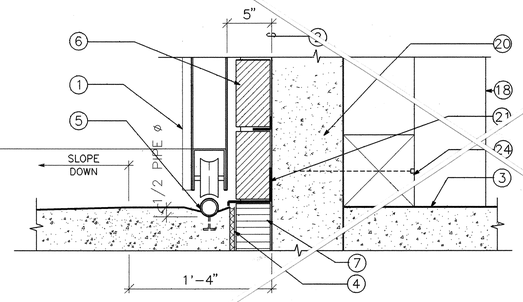

DETAIL DOOR TRACK @ ADJACENT WALL PANEL (5 / AS-1/AS-2)
SCALE: 1 1/2" = 1'-0"

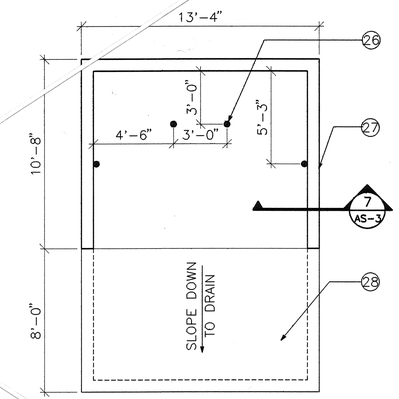

DETAIL DUMPSTER ENCLOSURE PLAN @ WEST CENTRAL SITE (6 / AS-3)
SCALE: 1/4" = 1'-0"

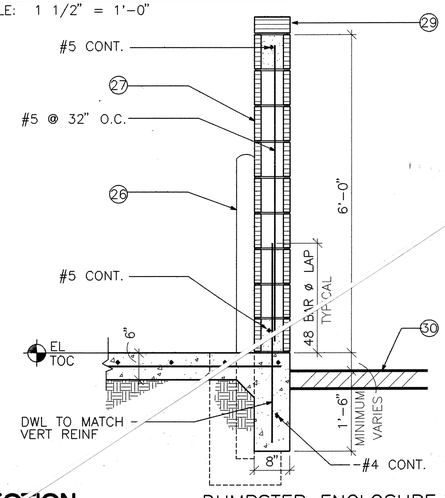

SECTION DUMPSTER ENCLOSURE WALL @ WEST CENTRAL SITE (7 / AS-3)
SCALE: 3/4" = 1'-0"

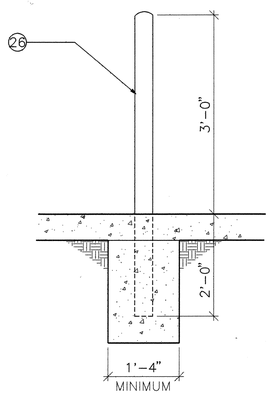

DETAIL PIPE BOLLARD @ WEST CENTRAL SITE (8 / AS-3)
SCALE: 3/4" = 1'-0"

RECORD SET
David J Larson
1-10-95

SEE SHEET 22 FOR STRUCTURE.

○ KEYED NOTES

1. DOOR LEAF W/ WHEELS @ BOTTOM
2. STRUCTURAL LINE
3. FINISH FLOOR
4. 1/2" FELT JOINT
5. SCHEDULE 40 PIPE TRACK W/ 1/2"øx 4" WELDED STUDS @ 12" O.C PIPE TO MEET DOORWHEEL REQUIREMENTS; INSTALL LEVEL
6. 4" CMU SPLIT FACE VENEER
7. 4" CMU VENEER BELOW GRADE
8. CONTROL JOINT
9. WIND COLUMN
10. HEADER PANEL
11. TRACK SUPPORT BRACKET
12. HEADERS
13. DOOR TRUCK
14. DOOR TOP FLASHING
15. SLIDING DOOR TOP TRACK
16. TRACK BRACKET
17. HEADER FLASHING
18. VERTICAL RAILROAD TIES, 4'-0" LONG, LAG BOLTED TO HORIZONTAL RAILROAD TIES. SEE DETAIL (8 / AS-4)
19. VERTICAL RAILROAD TIE @ JAMB, 4'-0" LONG. BOLT TO CONCRETE W/ 3/4"ø FRP BOLT. SEE DETAIL (8 / AS-4) SIM.
20. CONCRETE WALL
21. METAL BASE FLASHING, CONTINUOUS
22. METAL RIBBED PANEL SIDING
23. FLEXIBLE SIDE FLASHING, CONTINUOUS
24. HORIZONTAL RAILROAD TIE, BOLT TO CONCRETE WALL SEE DETAIL (8 / AS-4)
25. NEOPRENE CLOSURE, CONTINUOUS
26. CONCRETE FILLED PIPE BOLLARD, SEE DETAIL (8 / AS-3)
27. 8" SPLIT-FACE CMU
28. 6" CONCRETE SLAB W/ #4 @12" EW, 3" CLR BOTTOM
29. 4"x 8"x 16" CAP BLOCK, COLOR TO MATCH SPLIT-FACE CMU
30. ASPHALT PAVEMENT

AS BUILT INFORMATION

CONTRACTOR	PIMA CONSTRUCTION CO	
CITY CONSTRUCTION	CITY OF ALBUQUERQUE	
SURVEY BY	CITY OF ALBUQUERQUE	DATE 7/92
STAKED BY	CITY OF ALBUQUERQUE	DATE 7/94
INSPECTOR'S ACCEPTANCE BY		DATE
FIELD VERIFICATION BY		DATE
DRAWINGS CORRECTED BY		DATE

MICRO-FILM INFORMATION

RECORDED BY	DATE
NO.	

BENCH MARKS

ENGINEER'S SEAL/SURVEY INFORMATION

FIELD NOTES

NO.	BY	DATE
2	COA - M. REYNOLDS	7/31/92
1	COA - M. REYNOLDS	3/6/92

REVISIONS

NO.	DATE	REMARKS	BY

DESIGNED BY:	R. A. EHLERT	DATE: 10/92
DRAWN BY:	B. ROENSCH	DATE: 10/92
CHECKED BY:		DATE: 10/92

HN Holmes & Narver

CITY OF ALBUQUERQUE
PUBLIC WORKS DEPARTMENT
ENGINEERING GROUP

TITLE: EAST CENTRAL/WEST CENTRAL SALT STORAGE FACILITY ARCHITECTURAL DETAILS

APPROVALS	ENGINEER	DATE	APPROVALS	ENGINEER	DATE
DRC CHAIRMAN		10-28-92	WATER	N/A RWK	10-27-92
TRANSPORTATION	N/A	10-28-92	WASTE WATER	N/A RWK	10-27-92
HYDROLOGY	N/A				
PARKS & REC					

DRAWING NO. 4344.90 | MAP NO. | SHEET AS-3 OF 22

DWG: J:\CAD\277800\JAS-3 TIME: 09-24-92 15:27:51
plot scale: 1 1/2"=1'-0"

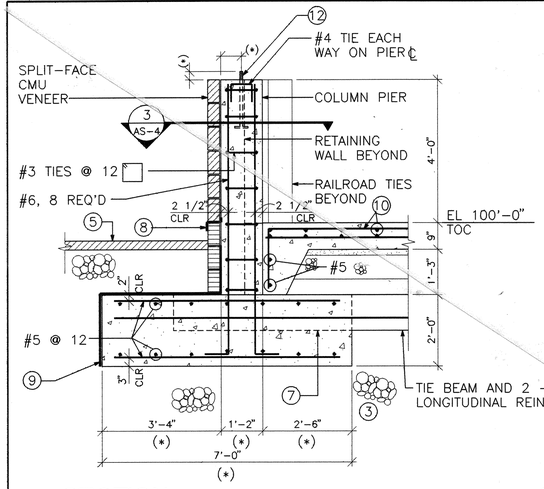

SECTION 1/AS-1,AS-4

SCALE: 1/2"=1'-0"

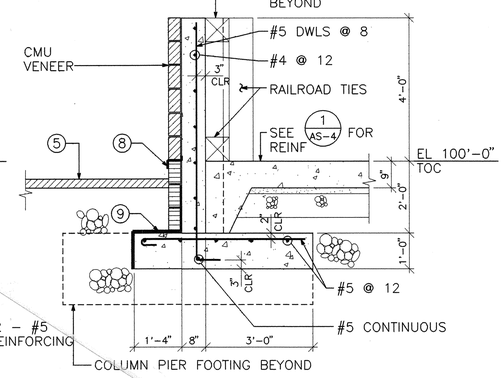

SECTION 2/AS-1,AS-4

SCALE: 1/2"=1'-0"

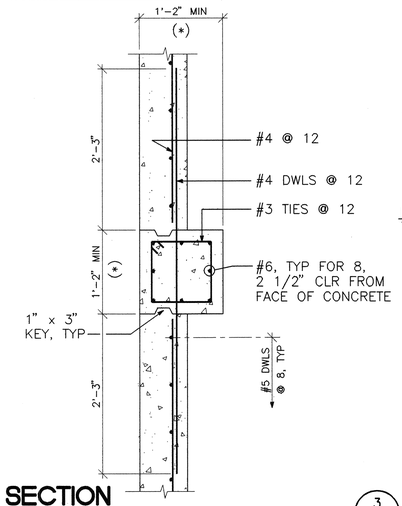

SECTION 3/AS-4

SCALE: 1"=1'-0"

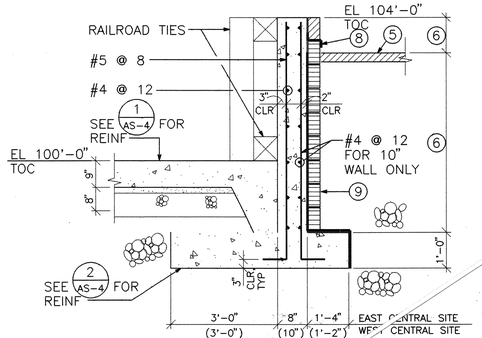

SECTION 4/AS-1

SCALE: 1/2"=1'-0"

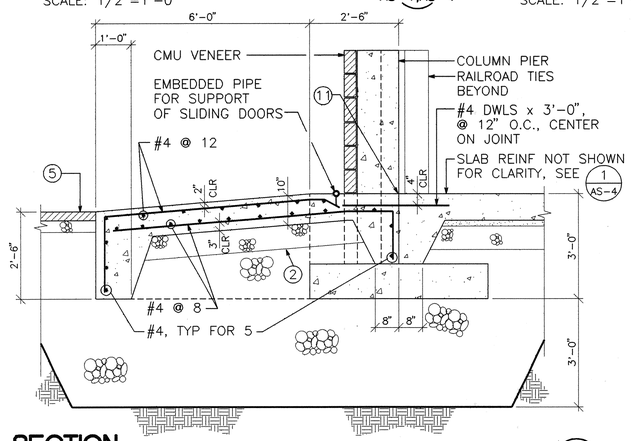

SECTION 5/AS-1,AS-4

SCALE: 1/2"=1'-0"

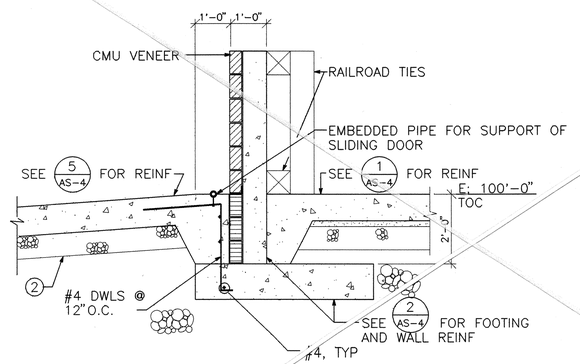

SECTION 6/AS-1

SCALE: 1/2"=1'-0"

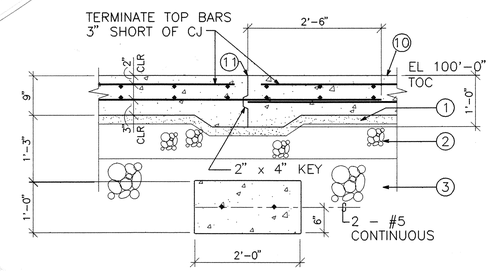

SECTION 7/AS-1

SCALE: 3/4"=1'-0"

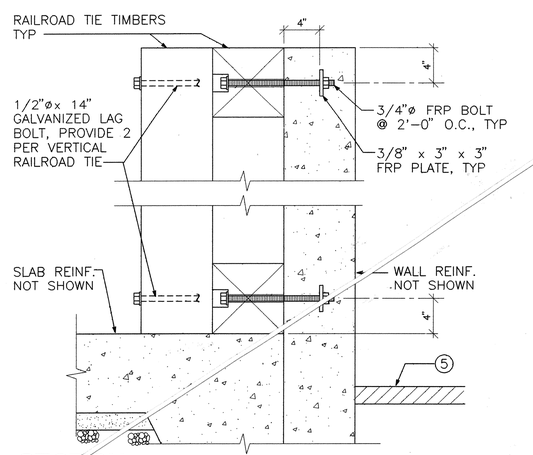

SECTION 8/AS-1,AS-3

SCALE: 1 1/2"=1'-0"

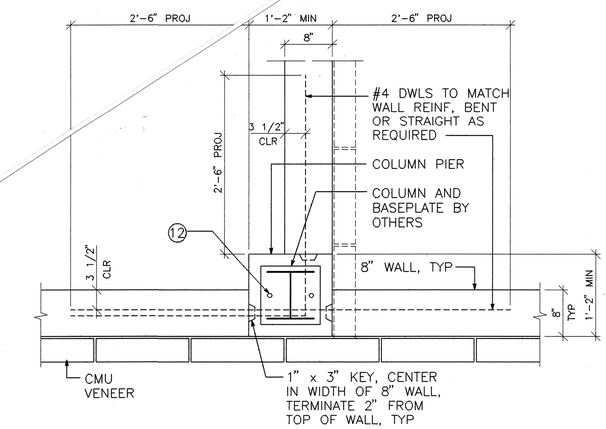

DETAIL TYPICAL COLUMN PIER/WALL INTERSECTION 9/AS-1

SCALE: 1"=1'-0"

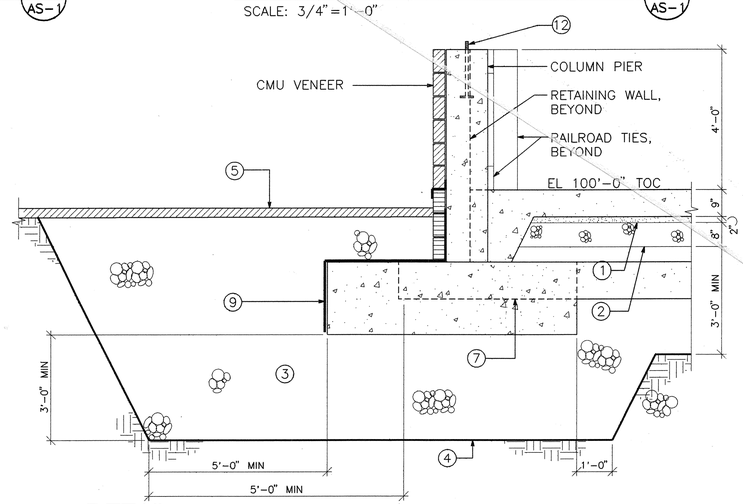

DETAIL TYPICAL SUBGRADE PREPARATION 10/AS-1,AS-2

SCALE: 1/2"=1'-0"

○ KEYED NOTES

1. 2" CLEAN SAND ON TOP OF VAPOR BARRIER.
2. 8" GRANULAR BASE COURSE MATERIAL.
3. COMPACTED STRUCTURAL FILL.
4. EXISTING NATIVE SOILS.
5. ASPHALT PAVEMENT
6. DEPTH OF FILL AT BACK WALL VARIES. SEE CIVIL DWGS. FOR FINISH PAVEMENT ELEVATIONS.
7. CONTINUOUS RETAINING WALL FOUNDATION, BEYOND.
8. CONTINUOUS FLASHING @ BASE, TYP
9. FLUID APPLIED WATERPROOFING @ CMU BELOW GRADE
10. SEE PLAN ON SHEET AS-1 FOR SLAB REINF.
11. PROVIDE 1/4" WIDE x 2" DEEP SILICONE SEALANT AT TOP OF JOINT.
12. 3/4"ø ANCHOR BOLT, TYP FOR 2 FINAL SIZE AND LOCATION TO BE ESTABLISHED BY BUILDING MANUFACTURER

RECORD SET

David J Larson
1-10-95

SEE SHEET 22 FOR STRUCTURE.

HN Holmes & Narver

AS BUILT INFORMATION

CONTRACTOR PIMA CONSTRUCTION CO
CITY OF ALBUQUERQUE
WORK STAKED TO GRADE BY CITY OF ALBUQUERQUE DATE 7/29/94
STAKED BY DATE
INSPECTOR'S ACCEPTANCE BY DATE
FIELD VERIFICATION BY DATE
DRAWINGS CORRECTED BY DATE
MICRO-FILM INFORMATION
RECORDED BY DATE
NO.

BENCH MARKS

SURVEY INFORMATION
FIELD NOTES

NO.	BY	DATE
1	COA - M. REYNOLDS	3/6/92
2	COA - M. REYNOLDS	7/31/92

ENGINEER'S SEAL

NO.	DATE	REMARKS	BY

REVISIONS

DESIGN
DESIGNED BY: R. A. EHLERT DATE: 10/92
DRAWN BY: D. G. WEST DATE: 10/92
CHECKED BY: DATE: 10/92

CITY OF ALBUQUERQUE
PUBLIC WORKS DEPARTMENT
ENGINEERING GROUP

TITLE: EAST CENTRAL/WEST CENTRAL SALT STORAGE FACILITY FOUNDATION SECTIONS AND DETAILS

APPROVALS	ENGINEER	DATE	APPROVALS	ENGINEER	DATE
DRC CHAIRMAN	N/A		WATER	N/A RWK	10-27-92
TRANSPORTATION	N/A RHO	10-28-92	WASTE WATER	N/A RWK	10-27-92
HYDROLOGY	N/A				
PARKS & REC					

DRAWING NO. 4344.90 MAP NO. SHEET AS-4 OF 22

DWG: J:\CAD\277800\J-AS-4 TIME: 09-24-92 15:41:49
plot scale: 1/2"=1'-0"

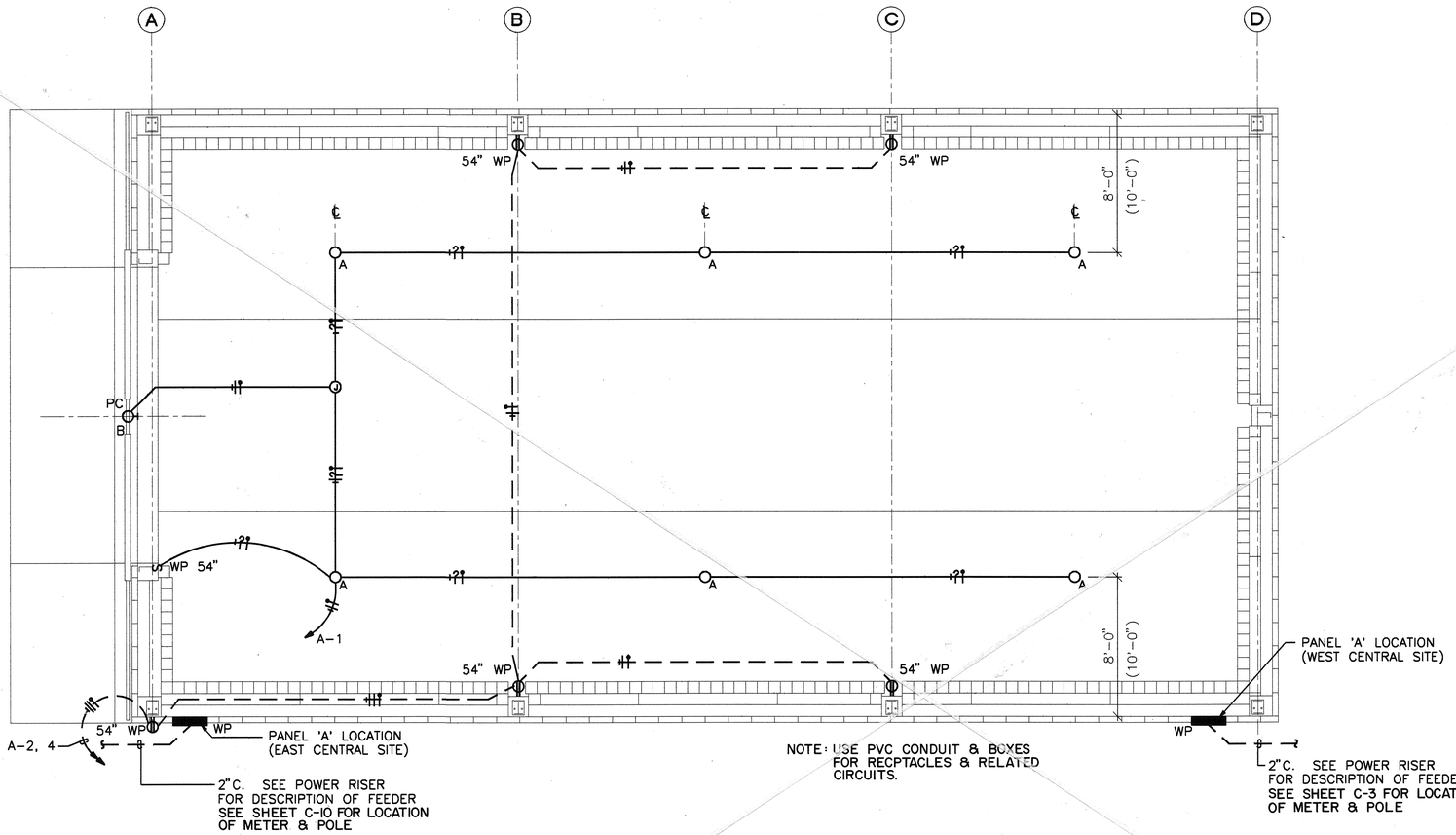

LIGHTING/POWER PLAN

SCALE: 1/4" = 1'-0"

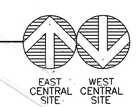

PANEL SCHEDULE

PANEL 'A' 120/240VOLTS, 1 PHASE, 3 WIRE WITH 100 AMP MAIN BREAKER. RAINPROOF ENCLOSURE.

NO. CCTS	BREAKER SIZE	LOAD	CCT NO.
1	20A-1P	LIGHTS	1
2	20A-1P*	RECEPTS	2,4
3	20A-1P	SPARES	3,5,6
10	-1P	SPACES	7-16

* PROVIDE GFCI CIRCUIT BREAKER

FIXTURE SCHEDULE

TYPE	MOUNTING	LAMPS	DESCRIPTION
A	STEM HUNG 17'-0" TO BOTTOM OF FIXTURE	1-100W HPS	MOLDCAST #MDL-5-00-10-12-
B	WALLMOUNT 1'-0" ABOVE DOOR	1-100W HPS	HPS WALL BRACKET WITH PHOTOCELL MOLDCAST #MDL-1-00-10-12-PCR

ELECTRICAL LEGEND

SYMBOL	DESCRIPTION
O	STEM HUNG HID FIXTURE
O-H	WALL MOUNTED HID FIXTURE
S WP	SPST TOGGLE SWITCH WITH WEATHER-PROOF COVERPLATE
PC	PHOTOCELL
WP	DUPLEX NEMA 5-20R RECEPTACLE WITH WEATHERPROOF COVERPLATE
	1/2" CONDUIT WITH NEUTRAL, HOT, SWITCH AND GROUND CONDUCTORS RESPECTIVELY
	HOMERUN TO PANELBOARD
	CONDUIT RUN EXPOSED
	CONDUIT RUN CONCEALED BELOW FLOOR OR GRADE
WP	WEATHERPROOF
	PEDESTAL METERING POST PER PNM REQUIREMENTS
	GROUNDING ROD 10'x 3/4" COPPER CLAD W/#6 BARE COPPER GROUND CONNECTION TO GROUND BUS

LOAD CALCULATIONS

LOAD	CONN'D KW	% DIV	EST. DEMAND KW
LIGHTING	1.1	100	1.1
RECEPTACLES	2.5	100	2.5
TOTALS	3.6		3.6

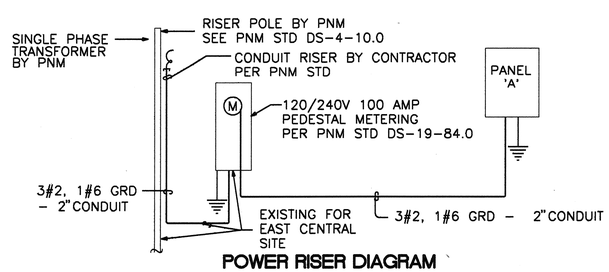

POWER RISER DIAGRAM

NO SCALE

○ KEYED NOTES

RECORD SET

David J Larson
1-10-95

SEE SHEET 22 FOR STRUCTURE.

Holmes & Narver

CITY OF ALBUQUERQUE
PUBLIC WORKS DEPARTMENT
ENGINEERING GROUP

TITLE: EAST CENTRAL/WEST CENTRAL SALT STORAGE FACILITY
ELECTRICAL LIGHTING/POWER PLAN LEGEND/SCHEDULES

APPROVALS	ENGINEER	DATE	APPROVALS	ENGINEER	DATE
DRC CHAIRMAN	NA	10-28-92	WATER	N/A RWK	10-27-92
TRANSPORTATION	N/A	10-28-92	WASTE WATER	N/A RWK	10-27-92
HYDROLOGY	NA				
PARKS & REC					

DRAWING NO. 4344.90 | MAP NO. | SHEET E-1 OF 22

AS BUILT INFROMATION
CONTRACTOR: PUHA CONSTRUCTION CO.
INSPECTED BY: CITY OF ALBUQUERQUE DATE 7/94
STAKED BY: CITY OF ALBUQUERQUE DATE 7/94
INSPECTORS ACCEPTANCE BY: DATE
FIELD VERIFICATION BY: DATE
DRAWINGS CORRECTED BY: DATE
MICRO-FILM INFORMATION
RECORDED BY: DATE
NO.

BENCH MARKS

SURVEY INFORMATION
FIELD NOTES

NO.	BY	DATE
1	COA - M. REYNOLDS	3/6/92
2	COA - M. REYNOLDS	7/31/92

ENGINEER'S SEAL

NO.	DATE	REMARKS	BY

REVISIONS

DESIGN
DESIGNED BY: D. CRAWFORD DATE: 10/92
DRAWN BY: B. ROENSCH DATE: 10/92
CHECKED BY: DATE: 10/92

DWG: J:\CAD\277800\JE-1
TIME: 09-29-92 15:34:20
plot scale: 1/4"=1'-0"

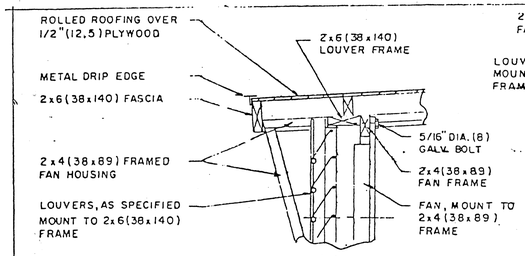

JAMB, DETAIL 'A' at FAN HOUSING (E)
SCALE 1"=1'-0"

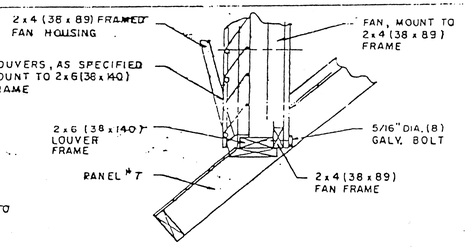

DETAIL 'B' at FAN HOUSING (E)
SCALE 1"=1'-0"

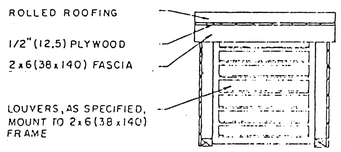

ELEVATION at FAN HOUSING (E)
SCALE 1/2"=1'-0"

*NOTE: FAN HOUSING, FAN and LOUVERS ARE OPTIONAL, SEE GENERAL NOTES.

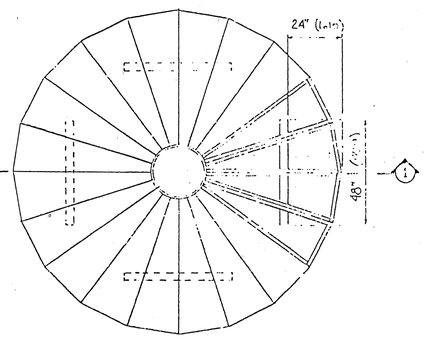

LIFTING ARRANGEMENT FOR ASSEMBLED DOME TOP
SCALE: 3/8"=1'-0"

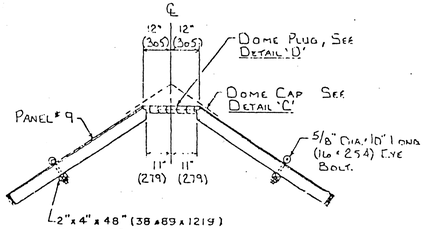

SECTION (1)
SCALE: 3/8"=1'-0"

NOTE:

PANEL #9 & PANELS #9 & #8, MAYBE ASSEMBLED ON THE GROUND AND LIFTED INTO PLACE.

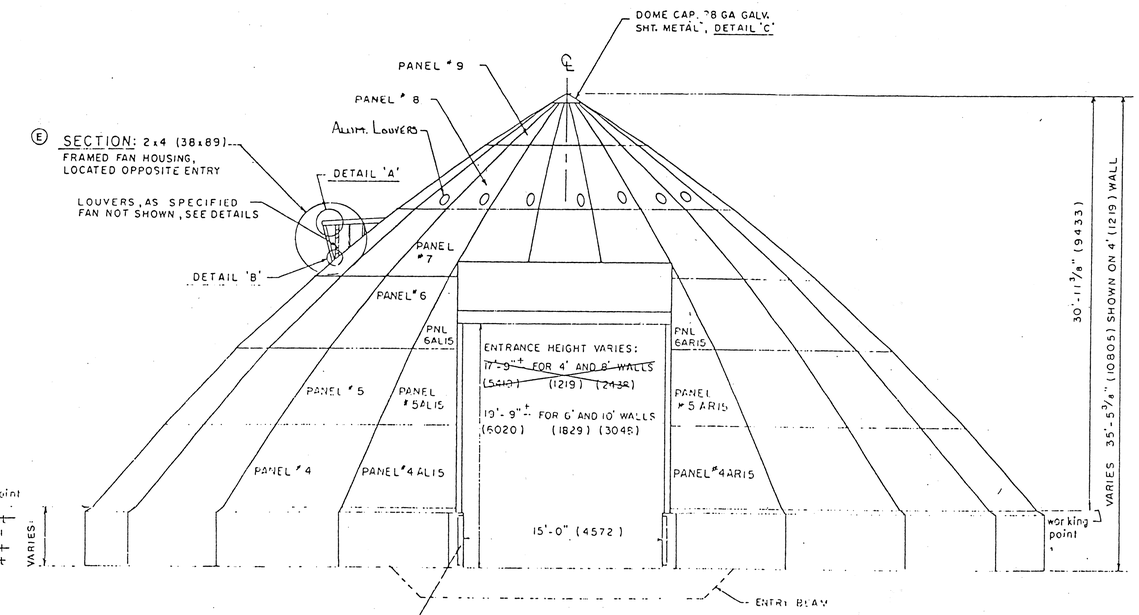

(E) ELEVATION
SCALE 3/16"=1'-0"

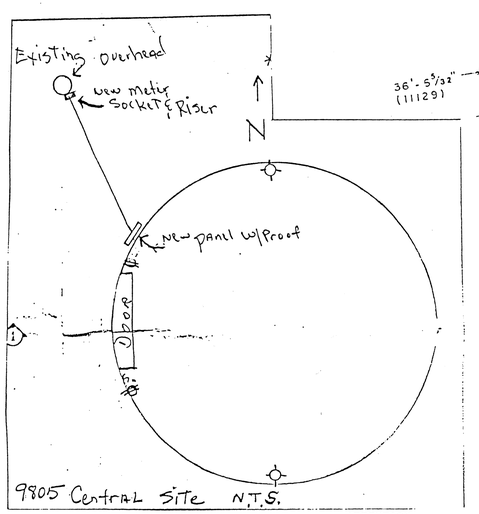

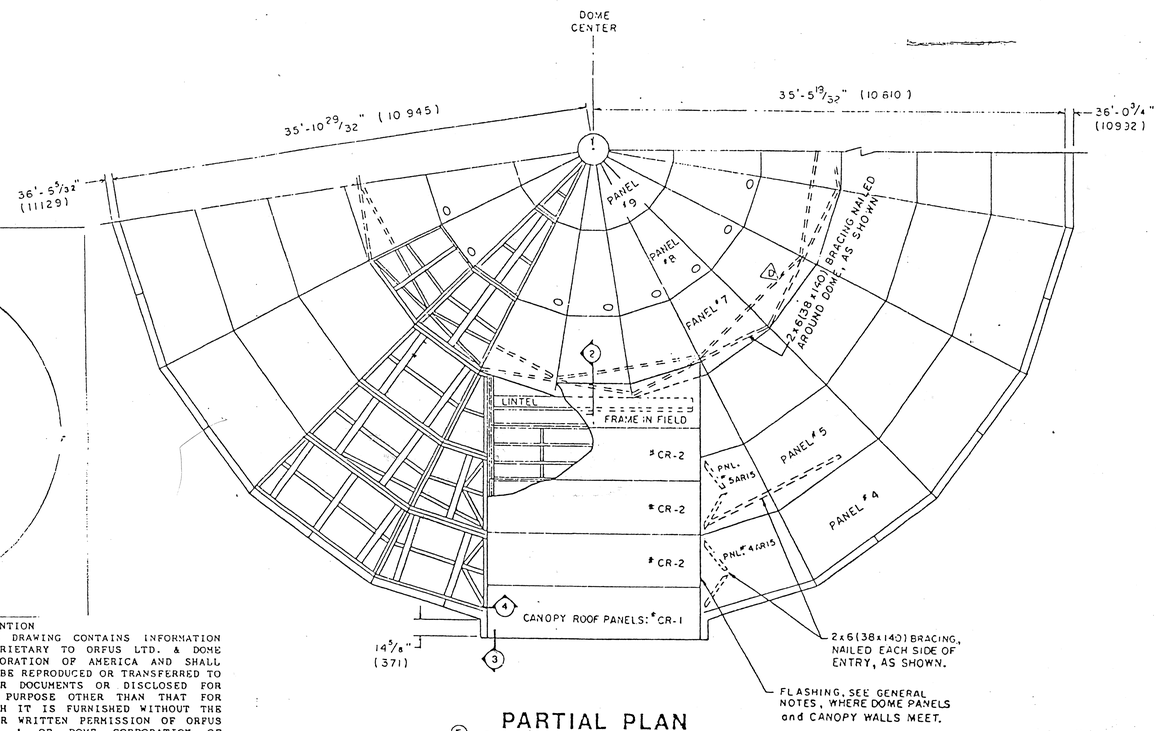

(E) PARTIAL PLAN
SCALE 3/16"=1'-0"

GENERAL NOTES

GENERAL

1. All workmanship except where noted otherwise shall be in accordance with the requirements of the latest issue of the building code standard of the area where the structure is located.
2. Ground snow drift shall not be allowed to pile up against the dome.
3. Stored material shall not be allowed to pile up against the dome.

FOUNDATION

1. Concrete in the foundation wall shall have a minimum compressive strength at 28 days of not less than 3,000 psi.
2. The interior surfaces of the concrete wall shall receive two applications of a protective coating of a mixture consisting of 50% each of mineral spirits and linseed oil. Mixture may be brushed, rolled or sprayed.
3. Reinforced steel shall be intermediate grade deformed ASTM-A615-(Latest Issue) Grade 60.

TIMBER

1. All materials shall conform to American Softwood Lumber Standard PS-20- (Latest Issue)
2. Lumber shall be kiln dried SPF or better Grade #2 or better.
3. Plywood shall be 5 ply,5 layer Douglas Fir Structural No. 1 Sheathing Rated Exterior, APA rated and conform to PS 1-(Latest Issue).
4. Panel framing members shall be planed so as to meet flush with the plywood sheathing.
5. Plywood edges shall be planed so as to butt against the edges of adjoining plywood.
6. Plywood shall be glued to the panel framework and either nailed with 2" spiral nails or 1 3/4" staples at 6" O.C. max.
7. Adhesive shall be of a waterproof type resorcinol resin adhesive applied in accordance with the manufacturers instructions.
8. Sill plates shall be pressure treated southern pine.

HARDWARE

1. Bolts shall be hot dip galvanized 5/8" dia. machine bolts with 2 3/4" square x 3/16" thk. square washers.
2. Nails for framing shall be 3 1/2" galvanized screw shank nails
3. Steel shall conform to ASTM-A36 unless noted otherwise.

ROOFING.

1. Roofing shingles shall be asphalt with asphalt or fiberglass matt, carrying a minimum 20 year manufactures prorated warranty. Installed as per manufactures specifications. Roll roofing shall be used over the entrance and fan dormer.
2. Flashing shall be 0.025" aluminum, galvanized metal or non metallic and applied where indicated on the drawing.

EXHAUST FAN AND LOUVER.

Exhaust fan and louver shall be as recommended by the building manufacturer or as required by the owner. Fan and fan housing are optional items to be included as part of the structure only upon specific request by the owner.

DESIGN LIVE LOADS:

Ground Snow Load - 40 psf
Wind Load - 90 mph

HUGH J. DICKIE NEW MEXICO #10441 REGISTERED PROFESSIONAL ENGINEER
7-13-93

REV. NO.	REVISIONS	DATE	BY
K	ADDED DETAIL 'G', CORRECTED NOTES, SHEETS 1 TO 4	01-27-92	SEH

DOME CORP. OF AMERICA
R-72' DIA. DOME, (21.95m)

PLAN and ELEVATION

City of Albuquerque
9805 Central N.E. Site

DWG. NO. R-72
22
2-25-86

RECORD SET
David J Lanoy
1-10-95