CITY OF Albuquerque

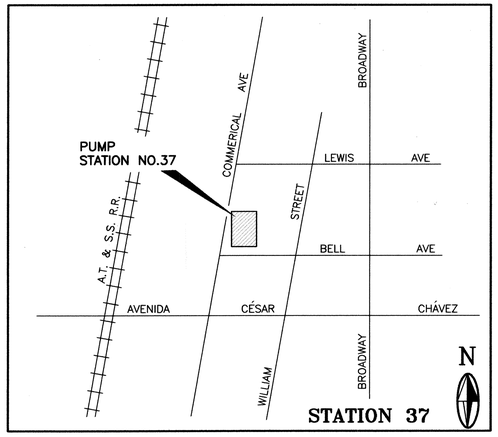

ZONE ATLAS: MAP L-14

LOCATION MAP
N.T.S.

CITY OF ALBUQUERQUE, NEW MEXICO
PUBLIC WORKS DEPARTMENT

STORM WATER PUMP STATION NO. 37
BELL REHABILITATION

JULY 2002

INDEX TO DRAWINGS

SEQ.	SHEET	TITLE
1	C-01	TITLE SHEET INDEX TO DRAWINGS
2	C-02	EXISTING BELL PUMP STATION NO. 37 – LOCATION MAP & SITE PLAN
3	C-03	BELL PUMP STATION NO. 37 – PUMP AND PIPING MODIFICATIONS PLANS, SECTION AND DETAILS
4	C-04	BELL PUMP STATION NO. 37 – DISCHARGE HEADER DETAIL AND MODIFIED PUMP ROOM CATWALK PLAN
5	E-01	ELECTRICAL LEGEND
6	E-02	ELECTRICAL ONE-LINE DIAGRAM
7	E-03	BELL STATION #37 ELECTRICAL SITE PLANS
8	E-04	BELL STATION #37 MOTOR ROOM ELECTRICAL REMOVALS AND TEMPORARY CONNECTIONS
9	E-05	BELL STATION #37 MOTOR ROOM POWER PLAN
10	E-06	BELL STATION #37 CONTROL LAYOUT AND CONDUIT PLAN
11	E-07	BELL STATION #37 LIFT PUMP #1 SCHEMATICS
12	E-08	BELL STATION #37 LIFT PUMP #2 SCHEMATICS
13	E-09	BELL STATION #37 LIFT PUMP #3 SCHEMATICS
14	E-10	BELL STATION #37 SUMP PUMP CONTROL SCHEMATIC
15	E-11	BELL STATION #37 BARSCREEN DIAGRAMS
16	E-12	BELL STATION #37 ELECTRICAL DETAILS
17	E-13	BELL STATION #37 LIFT PUMP #1 CONNECTION DIAGRAMS AND ALARM
18	E-14	BELL STATION #37 LIFT PUMP #2 AND #3 CONNECTION DIAGRAMS
19	I-01	BELL STATION #37 INSTRUMENTATION LEGEND
20	I-02	BELL STATION #37 ELECTRICAL P & ID DIAGRAM, SHEET 1
21	I-03	BELL STATION #37 ELECTRICAL P & ID DIAGRAM, SHEET 2
22	I-04	BELL STATION #37 ELECTRICAL P & ID DIAGRAM, SHEET 3
23	I-05	BELL STATION #37 ELECTRICAL P & ID DIAGRAM, SHEET 4
24	I-06	BELL STATION #37 LOOP DIAGRAMS, SHEET 1
25	I-07	BELL STATION #37 INSTALLATION DETAILS

2701 MILES RD SE
ALBUQUERQUE, NM 87106
TEL: 505.242-6700
FAX: 505.242-0673
MOLZEN-CORBIN & Associates
ENGINEERS/ARCHITECTS/PLANNERS

REV.	SHEETS	CITY ENGINEER	DATE	USER DEPARTMENT	DATE	USER DEPARTMENT	DATE

ENGINEERS STAMP & SIGNATURE

RONALD R. MOSHER, NEW MEXICO, 10753, 7-16-02, REGISTERED PROFESSIONAL ENGINEER

APPROVALS	ENGINEER	DATE
DRC Chairman		7-19-02
Transportation	N/A	7/16/02
Water/Wastewater	Billy J. Gabaldon	7/17/02
Hydrology	RB Brownson	7/16/02
Parks		
Constr. Coord.		7-19-02

****
APPROVED FOR CONSTRUCTION

City Architect — Date 7/16/02

City Engineer — Date 7/19/02

City Project No. 4682.91

Sheet 1 Of 25 (C-01)

37R1TIT.DWG 1=1 7-15-01 FILE: ABQ33-73 LS37

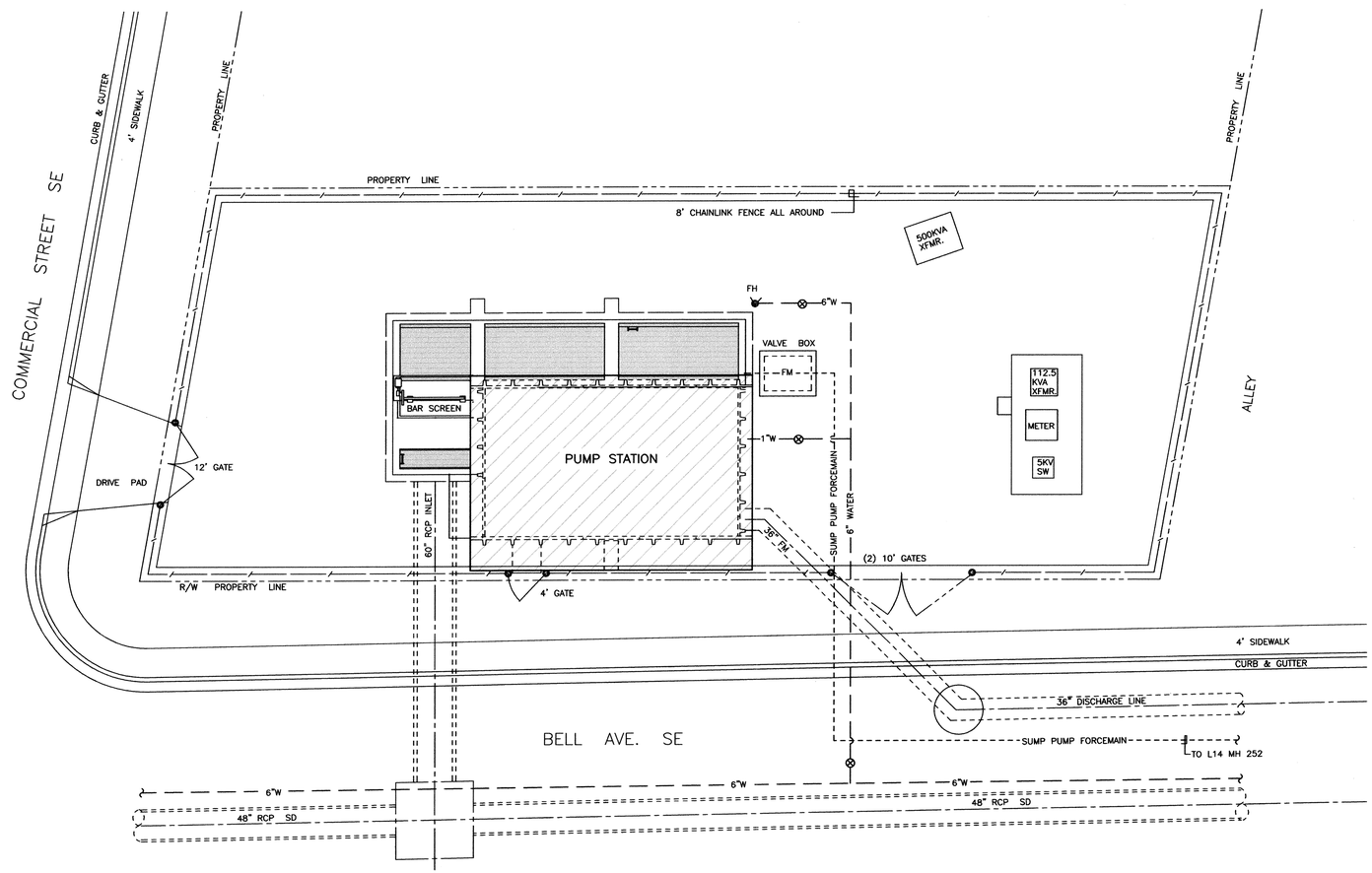

EXISTING STATION NO.37 SITE PLAN

SCALE: 1"=10'-0"

N

0 10 20

1"=10'-0"
GRAPHIC SCALE

© COPYRIGHT

2701 MILES RD SE
ALBUQUERQUE, NM 87106
TEL: 505.242-5700
FAX: 505.242-0673

MOLZEN-CORBIN & Associates
ENGINEERS/ARCHITECTS/PLANNERS

NO.	DATE	REMARKS	BY

REVISIONS

DESIGN

DESIGNED BY	BB/RM	DATE NOV. 1998
DRAWN BY	C.J. SPINELLO	DATE NOV. 1998
CHECKED BY	RM	DATE NOV. 1998

AS BUILT INFORMATION

CONTRACTOR
WORK STARTED BY DATE
INSPECTOR'S ACCEPTANCE BY DATE
FIELD VERIFICATION BY DATE
DRAWINGS COMPILED BY DATE

MICRO-FILM INFORMATION

RECORDED BY DATE
NO.

BENCH MARKS

SURVEY INFORMATION

FIELD NOTES

NO.	BY	DATE

ENGINEER'S SEAL

RONALD R. MOSHER
NEW MEXICO
10753
REGISTERED PROFESSIONAL ENGINEER
7-18-02

CITY OF ALBUQUERQUE
PUBLIC WORKS DEPARTMENT
ENGINEERING DEVELOPMENT GROUP

TITLE: STORM WATER PUMP STATION #37 REHABILITATION

EXISTING BELL PUMP STATION #37
LOCATION MAP AND SITE PLAN

Design Review Committee: APPROVED JUL 19 2002 DESIGN REVIEW COMMITTEE

City Engineer Approval: APPROVED JUL 19 2002 CITY ENGINEER

Last Design Update | Mo./Day/Yr. | Mo./Day/Yr.

City Project No.	Zone Map No.	Sheet
4682.91	L-14	C-02

2 Of 25

37RISITE.DWG 1=10 7/11/02

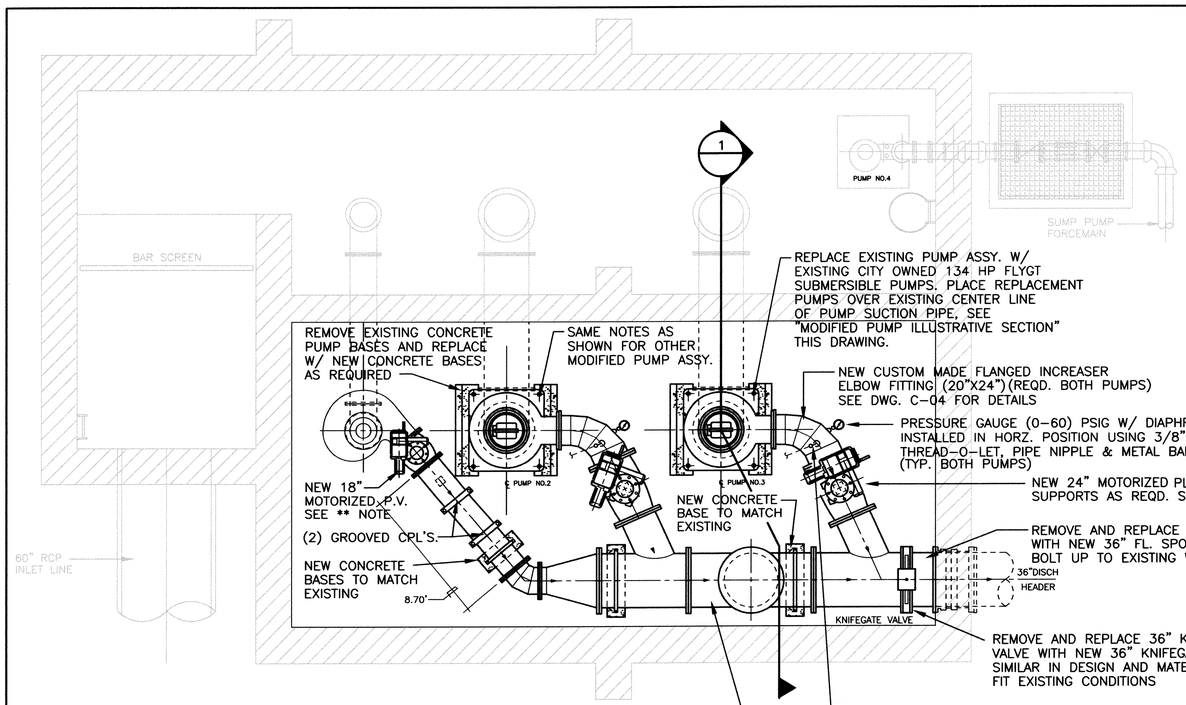

N

PUMP STATION NO.37 PUMP ROOM - MODIFIED PLAN

SCALE: 1/4" = 1'-0"

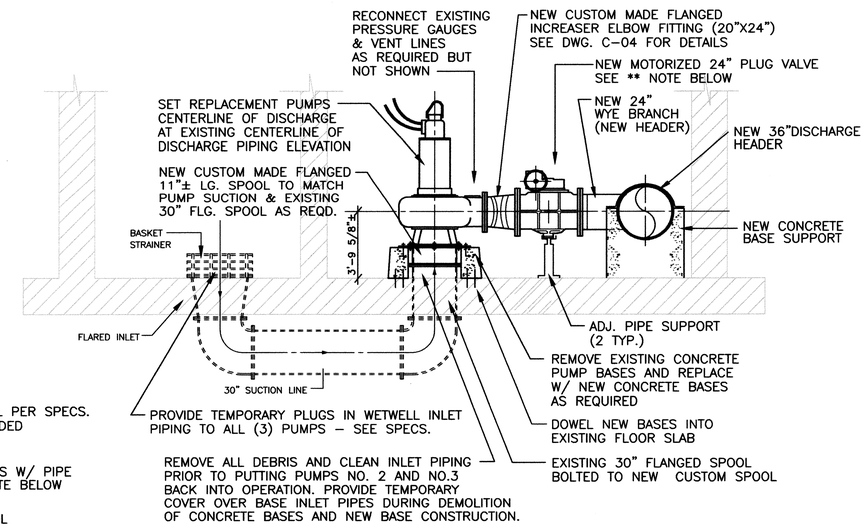

MODIFIED PUMP ILLUSTRATIVE SECTION (1)

N.T.S. (SIMILAR FOR BOTH PUMPS)

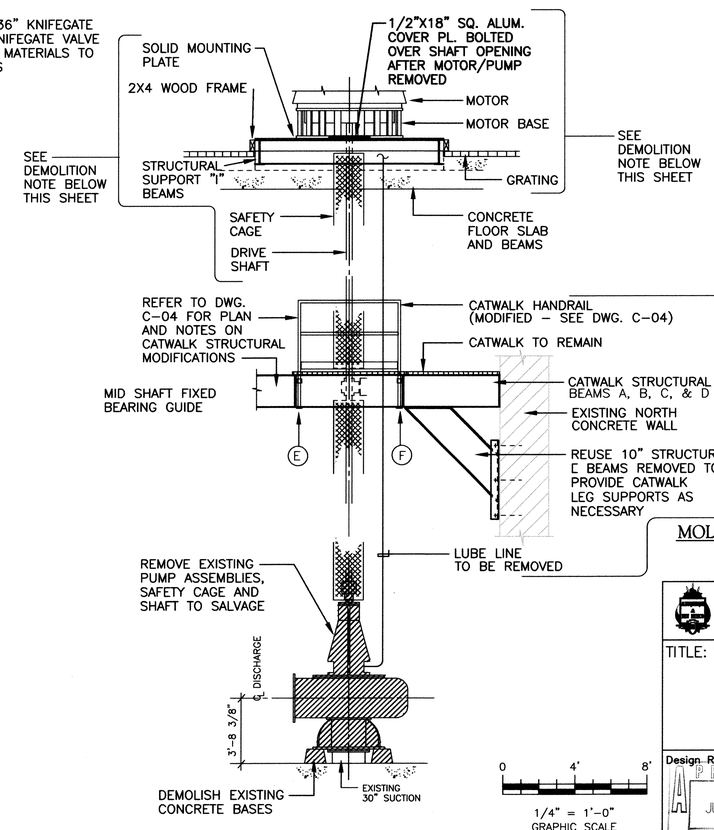

EXISTING PUMP/MOTOR ILLUSTRATIVE ELEVATION DETAIL

SCALE: NOT TO SCALE

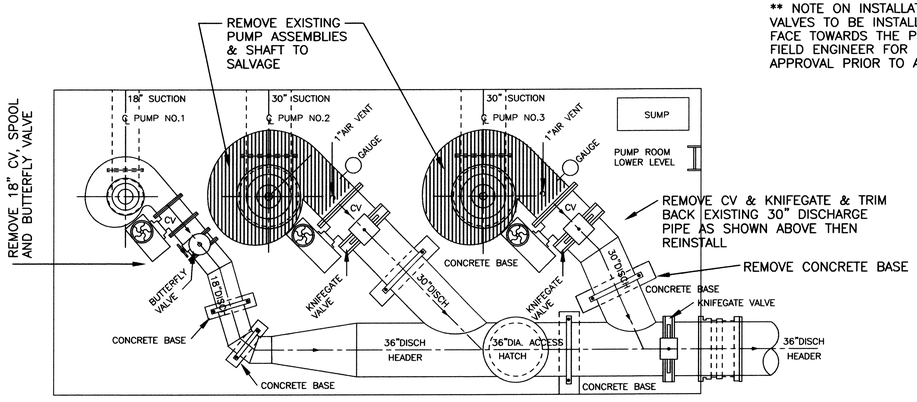

** NOTE ON INSTALLATION:
VALVES TO BE INSTALLED WITH PLUG FACE TOWARDS THE PUMP. CONTACT FIELD ENGINEER FOR INSTALLATION APPROVAL PRIOR TO ASSEMBLY.

DEMOLITION NOTES:

EXISTING BUT NOT SHOWN IS A STRUCTURALLY SUPPORTED GRATED CATWALK ALONG THE NORTH WALL AND OUT TO THE SHAFT BRG. LOCATION OF EACH PUMP LOCATED APPROX. 10 FT. BELOW STREET LEVEL FLOOR SLAB. PORTIONS OF CATWALK AND STRUCTURAL SUPPORT SYSTEM IS TO BE REMOVED TO ALLOW REMOVAL OF BOTH PUMPS & SHAFTS, REFER TO DWGS. FOR REMOVAL AND REPLACEMENT DETAILS. NO.2 AND NO.3 PUMP MOTOR/BASES ARE TO BE REMOVED TO SALVAGE. EXISTING MOTOR/BASE STRUCTURAL SUPPORTS, FRAMING, GRATING AND SOLID MOUNTING PLATES ARE TO BE REMOVED AND REINSTALLED AFTER NO2. AND NO.3 PUMPS ARE REMOVED FROM THE BUILDING. REINSTALLED MOUNTING PLATE SHAFT OPENINGS TO BE COVERED W/ 1/2" X 18" SQ. ALUM. CKR. PLS., BOLTED TO THE REINSTALLED SOLID MOUNTING PLATES AS REQD. AT EACH LOCATION.

EXISTING POWER CABLES TO PUMP MOTORS NO.2 & NO.3 MUST BE DISCONNECTED FROM POWER AND REMOVED PRIOR TO PUMP REMOVAL.

N

PUMP STATION NO.37 PUMP ROOM - EXISTING PLAN

SCALE: 1/4" = 1'-0"

© COPYRIGHT

AS BUILT INFORMATION
CONTRACTOR / WORK STAKED BY / INSPECTOR / ACCEPTANCE BY / FIELD VERIFICATION BY / DRAWINGS CORRECTED BY — DATE
MICRO-FILM INFORMATION
RECORDED BY — DATE — NO.

BENCH MARKS

SURVEY INFORMATION
FIELD NOTES

NO.	BY	DATE

ENGINEER'S SEAL
RONALD R. MOSHER NEW MEXICO 10753 REGISTERED PROFESSIONAL ENGINEER

NO.	DATE	REMARKS	BY

REVISIONS

DESIGNED BY	BB/RM/CS	DATE	FEB. 2000
DRAWN BY	C.J. SPINELLO	DATE	FEB. 2000
CHECKED BY	RM	DATE	FEB. 2000

MOLZEN-CORBIN & Associates
ENGINEERS/ARCHITECTS/PLANNERS
2701 MILES RD SE
ALBUQUERQUE, NM 87106
TEL: 505.242-5700
FAX: 505.242-0673

CITY OF ALBUQUERQUE
PUBLIC WORKS DEPARTMENT
ENGINEERING DEVELOPMENT GROUP

TITLE: STORM WATER PUMP STATION #37 REHABILITATION

BELL STATION #37
PUMP, VALVE & PIPING MODIFICATIONS
PLANS, SECTIONS AND DETAILS

Design Review Committee	City Engineer Approval	Last Design Update	Mo./Day/Yr.	Mo./Day/Yr.
APPROVED JUL 19 2002 DESIGN REVIEW COMMITTEE	APPROVED JUL 19 2002 CITY ENGINEER			

City Project No.	Zone Map No.	Sheet
4682.91	L-14	3 Of 25 C-03

TAB37PP4.DWG 1=48 7/11/02

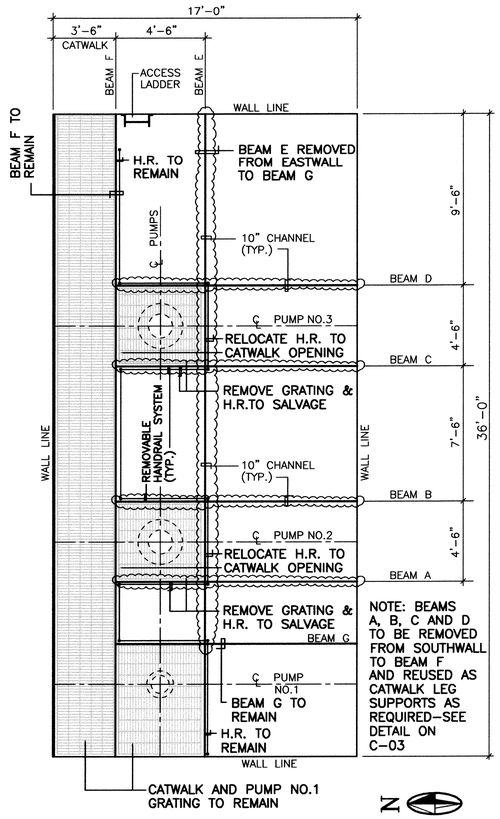

MODIFIED PUMP ROOM CATWALK – PLAN

SCALE: 1"=4'-0"

0 4 8

1"=4'-0"
GRAPHIC SCALE

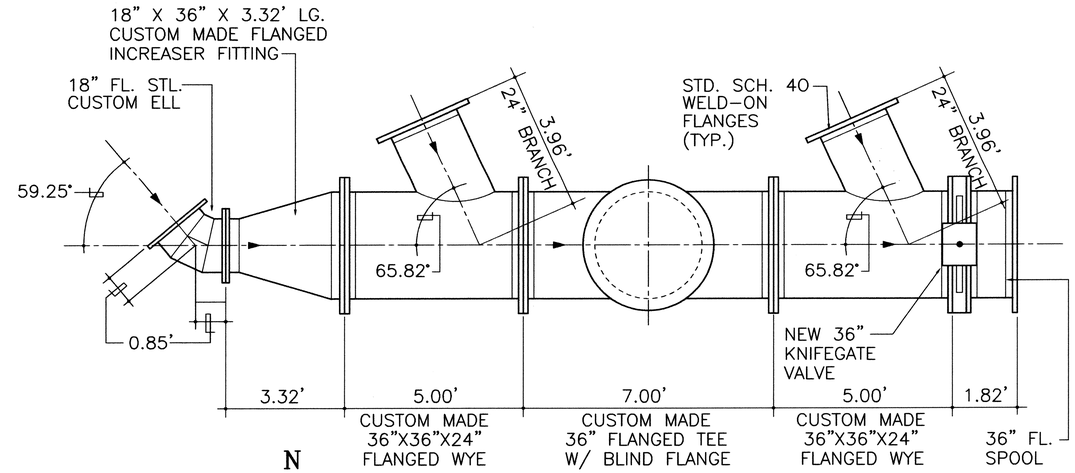

NOTE: ALL WELDED STEEL PIPE MATERIALS – SEE SPECS.

NEW DISCHARGE HEADER PLAN – DETAIL

SCALE: 1/2" = 1'-0"

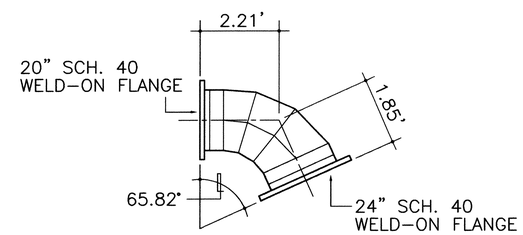

CUSTOM MADE FLANGED INCREASER ELL (20"X24")
2 REQUIRED

SCALE: 1/2" = 1'-0"

NOTE: CONTRACTOR SHALL VERIFY ALL DIMENSIONS IN THE FIELD PRIOR TO FABRICATION OF CUSTOM HEADER & FITTINGS

0 2 4

1/2"=1'-0"
GRAPHIC SCALE

© COPYRIGHT

AS BUILT INFORMATION

CONTRACTOR | DATE
WORK STAKED BY | DATE
INSPECTOR'S ACCEPTANCE BY | DATE
FIELD VERIFICATION BY | DATE
DRAWINGS CORRECTED BY | DATE
MICRO-FILM INFORMATION
RECORDED BY | DATE
NO.

BENCH MARKS

SURVEY INFORMATION
FIELD NOTES

NO.	BY	DATE

ENGINEER'S SEAL

RONALD R. MOSHER NEW MEXICO 10763 REGISTERED PROFESSIONAL ENGINEER

NO.	DATE	REMARKS	BY

REVISIONS

DESIGN

		DATE
DESIGNED BY	RM/CS	FEB. 2000
DRAWN BY	C.J. SPINELLO	FEB. 2000
CHECKED BY	RM	FEB. 2000

2701 MILES RD SE
ALBUQUERQUE, NM 87106
TEL: 505.242-5700
FAX: 505.242-0673

MOLZEN-CORBIN & Associates
ENGINEERS/ARCHITECTS/PLANNERS

CITY OF ALBUQUERQUE
PUBLIC WORKS DEPARTMENT
ENGINEERING DEVELOPMENT GROUP

TITLE: STORM WATER PUMP STATION #37 REHABILITATION

BELL STATION #37
DISCHARGE HEADER DETAIL AND MODIFIED PUMP ROOM CATWALK PLAN

Design Review Committee	City Engineer Approval	Last Design Update	Mo./Day/Yr.	Mo./Day/Yr.
APPROVED JUL 19 2002 DESIGN REVIEW COMMITTEE	APPROVED JUL 19 2002 CITY ENGINEER			

City Project No.	Zone Map No.	Sheet
4682.91	L-14	4 Of 25 C-04

TAB37PP5 1=48 6-8-01

POWER

- LPA-5 EP — DUPLEX RECEPTACLE
  - EP – EXPLOSIONPROOF
  - GFI – GRD FAULT INTERRUPTER
  - WP – WEATHERPROOF
- PP1-2 — SPECIAL RECEPTACLE
- J — JUNCTION BOX ON CEILING
- J — JUNCTION BOX ON WALL
- FUSED COMBINATION STARTER
- # — EQUIPMENT SEE ABBREVIATIONS
- M — SINGLE PHASE MOTOR
- M — THREE PHASE MOTOR
- T — THERMOSTAT
- PUSHBUTTON
  - ESS – EMERGENCY STOP BUTTON
  - S/S – START/STOP
- UH — UNIT HEATER
- EC — EVAPORATIVE COOLER
- GROUND ROD
- G — GROUND CONDUCTOR EXOTHERMIC WELD
- VS — SOLENOID VALVE
- 30A — DISCONNECT SWITCH
- GH — GAS HEATER
- XXXX — CONDUIT IDENTIFIER
  - XXXX – NUMBER

TERMINALS

- MCU, MCC, DP'S
- PLC/CONTROL PANEL
- ELECT. VALVE ACTUATOR
- FIELD JB
- TEL
- MOTOR RESISTER TERMINAL
- PACKAGE CONTROL
- PACKAGE CONTROL #2

LIGHTING

- 1 — FLUORESCENT CEILING FIXTURE
  - TYP. 1 — FIXTURE TYPE PER SPECIFICATION SCHEDULE
- 1 a — WALL FIXTURE
  - # DESIGNATES TYPE, LETTER DESIGNATES SWITCH
- PEC — PHOTELECTRIC CELL
- $# — SWITCH, # INDICATES:
  - 3 – THREE WAY
  - 4 – FOUR WAY
  - a – SWITCH DESIGNATION
  - K – KEY OPERATED
  - WP – WEATHERPROOF
  - DP – DOUBLE POLE

SCHEMATICS

- FUSE
- TERMINAL BLOCK MOUNTED FUSE
- SELECTOR SWITCH (A B C; X0X, X00, 00X)
  - A, B, C — INDICATES SWITCH POSITION
  - X — INDICATES CLOSED CONTACT
  - 0 — INDICATES OPEN CONTACT
- CENTRIFUGAL SWITCH
- NORMALLY OPEN PUSHBUTTON
- NORMALLY CLOSED PUSHBUTTON
- ## TDOD — TIME DELAY RELAY CONTACT OPEN AFTER DROP OUT
  - # = OPERATING COIL
- ## TDOD — TIME DELAY RELAY CONTACT CLOSE AFTER DROP OUT
  - # = OPERATING COIL
- ## TDOE — TIME DELAY RELAY CONTACT CLOSE AFTER ENERGIZING
  - # = OPERATING COIL
- NORMAL OPEN LEVEL SWITCH
- NORMAL CLOSED LEVEL SWITCH
- OPEN PRESSURE SWITCH
- NORMALLY OPEN LIMIT SWITCH
- NORMALLY CLOSED LIMIT SWITCH
- TORQUE SWITCH
- R — NORMALLY OPEN CONTACT
  - R INDICATES COIL REFERENCE
- R — NORMALLY CLOSED CONTACT
  - R INDICATES COIL REFERENCE
- OPEN TEMPERATURE SWITCH
- R — RELAY COIL
  - R–RELAY DESIGNATION
- R — PILOT LIGHT
  - R INDICATES COLOR
  - R–RED
  - G–GREEN
  - A–AMBER
  - W–WHITE
- M — MOTOR
- SHIELD
- TRIP POLES — CIRCUIT BREAKER
- SWITCH
- OL'S — OVERLOAD'S

ONE-LINE DIAGRAMS

- 2.6 IMP. 240V 5KVA 120V — TRANSFORMER
  - 240V – PRIMARY VOLTAGE
  - 5KVA – KVA RATIING
  - 120V – SECONDARY VOLTAGE
  - 2.6 IMP – TRANSFORMER IMPEDANCE
- 3ø GROUNDED WYE
- 3ø UNGROUNDED DELTA
- 300:5 (2) — CURRENT TRANSFORMER
  - 300:5 – INDICATES CT RATIO
  - (2) – INDICATES QUANTITY
- 480V 120V (2) — FUSED POTENTIAL TRANSFORMER
  - 480V – PRIMARY VOLTAGE
  - 120V – SECONDARY VOLTAGE
  - (2) INDICATES QUANTITY
- # — SWITCHBOARD METER, # INDICATES
  - A – AMMETER
  - ET – ELAPSED TIME
  - KW – KILOWATT
  - KWH – KILOWATT–HOUR
  - KWHD – HOUR–DEMAND
  - V – VOLTMETER
- GROUND
- THERMAL OVERLOAD
- SURGE ARRESTER
- 100A — DOUBLE THROW DISCONNECT
  - 100 A– AMPERAGE RATING
- 60A 3P — SINGLE THROW DISCONNECT
  - 60A – AMPERAGE RATING
  - 3P – NUMBER OF POLES
- 600A — DRAWOUT FUSE & RATING
- 100A 225A 3P — CIRCUIT BREAKER
  - 100A – TRIP RATING
  - 225A – FRAME RATING (FOR ADJUSTABLE TRIP BREAKERS)
  - 3P – NUMBER OF POLES
  - M – MAGNETIC TRIP
- E 1200AF 800AT — LOW VOLTAGE AIR CIRCUIT BREAKER
  - E – INDICATES ELECTRICAL SHUNT TRIP
  - M – INDICATES MECHANICAL SHUNT TRIP
  - 1200AF – FRAME RATING
  - 800AT – TRIP RATING
- HP — SINGLE PHASE MOTOR
- HP — THREE PHASE MOTOR
- K — KIRK KEY INTERLOCK
- 60A 45A LTR # — FUSED SWITCH COMBINATION STARTER
  - 60A – INDICATES SWITCH RATING
  - 45A – INDICATES FUSE SIZE
  - # – NEMA STARTER SIZE
  - LTR = TYPE
  - FV2S – FULL VOLTAGE 2 SPEED
  - FVR – FULL VOLTAGE REVERSING
  - FVNR – FULL VOLTAGE NON–REVERSING
  - RVAT – REDUCED VOLTAGE AUTOTRANSFORMER
  - PW – PART WINDING
  - MV – MEDIUM VOLTAGE
  - AFD – ADJUSTABLE FREQUENCY DRIVE

ONE-LINE DIAGRAMS

- 60CA 100A IT, ## # — MOTOR CIRCUIT PROTECTOR COMBINATION STARTER
  - 100A IT – INSTANTANEOUS TRIP RATING
  - 60CA – CONTINUOUS AMP
  - # – NEMA STARTER SIZE
  - ## – TYPE
- DP–A — DISTRIBUTION PANELBOARD
- POWER FACTOR CORRECTION CAPACITOR
- LIGHTNING ARRESTOR
- TRANSIENT SUPPRESSOR

CIRCUITING

- PHASE CONDUCTOR
- NEUTRAL CONDUCTOR
- SWITCHED CONDUCTOR
- GROUNDING CONDUCTOR
- HOMERUN INDICATION
- CONTROL CONDUCTOR
  - 4 – INDICATES # OF COND.
- SHIELDED PAIR
  - 4 – INDICATES # OF PAIRS
- MANUFACTURER SUPPLIED
- CONDUIT TURNS DOWN
- CONDUIT TURNS UP
- SURFACE MOUNTED CONDUIT
- BURIED OR EMBEDDED CONDUIT
- G — GROUND WIRE

ABBREVIATIONS

A	AMPERES
AFF	ABOVE FINISHED FLOOR
AFG	ABOVE FINISHED GRADE
BSCP	BAR SCREEN CONTROL PANEL
CJB	CONTROL JUNCTION BOX
CTL. PNL.	CONTROL PANEL
CT	CURRENT TRANSFORMER
DP#	DISTRIBUTION PANEL & IDENTIFYING LETTER
DV	DISCHARGE VALVE
DVCP	DISCHARGE VALVE CONTROL PANEL
ECU	EVAPORATIVE COOLER UNIT
EMT	ELECTRICAL METALLIC TUBING
FE	FLOW ELEMENT
FT	FLOW TRANSMITTER
FTI	FLOW TRANSMITTER/INDICATOR
FVNR	FULL VOLTAGE NON–REVERSING
GUH	GAS UNIT HEATER
GFIR	GROUND FAULT INTERRUPTING RECEPTACLE
GRD, G	GROUND
HID	HIGH INTENSITY DISCHARGE
HVAC	HEATING, VENTILATION, AIR CONDITIONING
IC	INSTRUMENT CABINET
J	JUNCTION
JB	JUNCTION BOX
KV	KILO VOLT
KVA	KILO VOLT–AMPERE
KW	KILOWATT
KWH	KILOWATT–HOUR
KVAR	KILO VOLT AMPHERE REACTIVE

ABBREVIATIONS CONT.

L	LINE
LE	LEVEL ELEMENT
LFMC	LIQUIDTIGHT FLEXIBLE METALLIC CONDUIT
LI	LEVEL INDICATOR
LSH	LEVEL SWITCH HIGH
LTI	LEVEL TRANSMITTER/INDICATOR
LT	LEVEL TRANSMITTER
M	MAGNETIC TRIP
MCU	MOTOR CONTROL UNIT
MCC	MOTOR CONTROL CENTER
MOV	MOTOR OPERATED VALVE
N	NEUTRAL
NC	NORMALLY CLOSED
NEMA	NATIONAL ELECTRICAL MANUFACTURER'S ASSOC
NIC	NOT IN CONTRACT
NIU	NOT IN USE
NO	NORMALLY OPEN
N.T.S.	NOT TO SCALE
OFE	OWNER FURNISHED EQUIPMENT
OL'S	OVERLOADS (THERMAL OVERLOAD CONTACTS)
P#CR	PUMP NUMBER CONTROL RELAY
PBV	PUMP BYPASS CONTROL VALVE
PCB	POLYCHLORINATED BIPHENYL
PCP	PUMP CONTROL PANEL
PEC	PHOTO–ELECTRIC CELL
PF	POWER FACTOR
PFCC	POWER FACTOR CORRECTION CAPACITOR
PH	PHASE
PNM	PUBLIC SERVICE COMPANY OF NEW MEXICO
PSH	PRESSURE SWITCH HIGH (HIGH DISC. PRESS. SWITCH)
PSL	PRESSURE SWITCH LOW
PT	POTENTIAL TRANSFORMER
PTT	PRESSURE TRANSDUCER TRANSMITTER
PVC	POLYVINYL CHLORIDE
RMC	RIGID METAL CONDUIT, GALVANIZED
RTB	REMOTE TERMINAL BLOCK
RTU–TB	REMOTE TERMINAL UNIT TERMINAL BLOCK
RTD	RESISTANCE TEMPERATURE DEVICE
SP	SPARE
SPCP	SUMP PUMP CONTROL PANEL
SW	SWITCH
SYM	SYMMETRICAL
TB	TERMINAL BLOCK
TE	TEMPERTURE ELEMENT (MOTOR RTD)
TEL	TELEMETRY
TSH	TEMP. SWITCH HIGH (HIGH AMBIENT TEMP. SWITCH)
TSP	TWISTED SHIELDED PAIR
TSL	TEMP. SWITCH LOW (LOW AMBIENT TEMP. SWITCH)
TWSH	TWISTED SHIELDED CONDUCTORS
TYP	TYPICAL
UH	UNIT HEATER
V	VOLT
VAC	VOLTS ALTERNATING CURRENT
VDC	VOLTS DIRECT CURRENT
VIBJB	VIBRATION SENSOR JUNCTION BOX
VLV	VALVE LOCATED ITEM
VS	SOLENOID VALVE
W	WIRE
WH	WATER HEATER
WP	WEATHERPROOF
WT	WATERTIGHT
XFMR	TRANSFORMER
XMTR	TRANSMITTER
Y	WYE
ZSC	POSITION SWITCH CLOSED
ZSO	POSITION SWITCH OPEN
Δ	DELTA
ø	PHASE
PXXX	POWER CONDUCTORS
CXXX	CONTROL CONDUCTORS
LXXXX	LIGHTING & RECEPTACLE CONDUCTORS

NOTE: SOME SYMBOLS SHOWN BUT NOT USED.

© COPYRIGHT

2701 MILES RD SE
ALBUQUERQUE, NM 87106
TEL: 505.242.6700
FAX: 505.242.0673
MOLZEN-CORBIN & Associates
ENGINEERS/ARCHITECTS/PLANNERS

AS BUILT INFORMATION

CONTRACTOR — DATE
WORK STAKED BY — DATE
INSPECTED BY — DATE
ACCEPTANCE BY — DATE
VERIFICATION BY — DATE
DRAWINGS CORRECTED BY — DATE
MICRO-FILM INFORMATION
RECORDED BY — DATE
NO.

BENCH MARKS

SURVEY INFORMATION

FIELD NOTES

NO.	BY	DATE

ENGINEER'S SEAL

STEVEN E. SORENSON — NEW MEXICO — 6570 — REGISTERED PROFESSIONAL ENGINEER

16 July 2002

NO.	DATE	REMARKS	BY

REVISIONS

DESIGNED BY WNH — DATE 10-00
DRAWN BY RA — DATE 10-00
CHECKED BY SES — DATE 7-02

CITY OF ALBUQUERQUE
PUBLIC WORKS DEPARTMENT
ENGINEERING DEVELOPMENT GROUP

TITLE: STORM WATER PUMP STATION #37 REHABILITATION

ELECTRICAL LEGEND

Design Review Committee: APPROVED JUL 19 2002 DESIGN REVIEW COMMITTEE

City Engineer Approval: APPROVED JUL 19 2002 CITY ENGINEER

Last Design Update — Mo./Day/Yr. — Mo./Day/Yr.

City Project No.	Zone Map No.	Sheet
4682.91	L-14	E-01

5 Of 25

EAB37E01 1=1 7-2-02

PANEL ELP

DESCRIPTION	BRKR	CKT	LOAD PER PHASE A	LOAD PER PHASE B	CKT	BRKR	DESCRIPTION
ELECTRIC VALVE ACTUATOR #1	30	1			2	30	ELECTRIC VALVE ACTUATOR #2
	30	3			4	30	
	30	5			6	30	
ELECTRIC VALVE ACTUATOR #3	30	7			8	20	PLC
	30	9			10		
	30	11			12		
		13			14		
		15			16		
		17			18		
		19			20		
		21			22		
		23			24		

208Y/120 VOLT
100 AMP BUS,
100 AMP MCB, NEMA 1

PANEL LP

DESCRIPTION	BRKR	CKT	LOAD PER PHASE A	LOAD PER PHASE B	CKT	BRKR	DESCRIPTION
UPPER LEVEL LIGHTS	20	1			2	20	EXTERIOR LIGHTS (7)
LOWER LEVEL LIGHTS	20	3			4	20	
SPARE	20	5			6	20	RECEPTS
SPARE	20	7			8	20	HEAT TRACE BACKFLOW
SPARE	20	9			10	20	
SUMP PUMPS	20	11			12	20	
SPARE	20	13			14	20	SPARE
SPARE	20	15			16	20	
HEATER CONTROLS	20	17			18	20	HEATER CONTROLS
SPARE	30	19			20	–	SPACE
	2P	21			22	–	SPACE
SPACE	–	23			24	–	SPACE

(8) PANEL LP1

DESCRIPTION	BRKR	CKT	LOAD PER PHASE A	LOAD PER PHASE B	CKT	BRKR	DESCRIPTION
UPPER LEVEL LIGHTS	20	1			2	20	EXTERIOR LIGHTS
LOWER LEVEL LIGHTS	20	3			4	20	PLC
SPARE	20	5			6	20	RECEPTS
SPACE	–	7			8	20	HEAT TRACE BACKFLOW
SPACE	–	9			10	–	SPACE
SUMP PUMPS	20	11			12	–	SPACE
SPARE	20	13			14	20	SPARE
SPARE	20	15			16	–	SPACE
HEATER CONTROLS	20	17			18	20	HEATER CONTROLS
UPS	40	19			20	–	SPACE
	–	21			22	–	SPACE
	3P	23			24	–	SPACE

208Y/120 VOLT
225A BUS
100A MCB, 30 CKT, (NOT ALL SPACES SHOWN)

KEYED NOTES

1. INSTALL INDICATED CONDUITS AND CONDUCTORS.
2. INSTALL OFE FUSIBLE PRIMARY SWITCH. PROVIDE AND INSTALL S & C SML4Z FUSE HOLDERS AND REFILLS IN PRIMARY SWITCH. STORE ONE SET OF SPARE FUSES REFILLS IN DOOR AND DELIVER ADDITIONAL SET TO OWNER.
3. 500 KVA TRANSFORMER.
4. INSTALL NEW MOTOR CONTROL CENTER.
5. KEY LOCK SYSTEM TO PERMIT ONLY ONE CIRCUIT BREAKER TO BE CLOSED. KIRK BRAND, NO SUBSTITUTES.
6. INSTALL DRAWOUT FUSES OR DISCONNECT AND FUSES. INSTALL THREE PHASE VOLTAGE MONITOR AND CONNECT OUTPUT TO PLC. SSAC PLMU SERIES OR ENGINEER APPROVED SUBTITUTE.
7. SCHEDULE OF EXISTING PANEL. RECONNECT LOADS TO REPLACEMENT PANELBOARD LP–1.
8. CIRCUITS MAY BE REARRANGED IF PHYSICALLY NECESSARY. PROVIDE CORRECTED DIRECTORY.
9. TEMPORARY CONNECTION OF NEW MCC TO OLD MCC. SEE E–04.
10. ELECTRONIC SAG PROTECTOR.
11. OTHER LOADS ARE SHOWN ON SCHEDULE.
12. PRIMARY METERING ENCLOSURE METER BASE AND ENCLOSURE AS REQUIRED BY PNM. COMPLY WITH PNM DS–19–79.0 AND DRAWINGS REFERENCED THEREON. DELIVER TO PNM FOR METERING EQUIPMENT INSTALLATION. RETRIEVE AND INSTALL.
13. 4" C. WITH 3 #2 15 KV, #8 GND.
14. FOR ALL ASPECTS OF SERVICE, COMPLY WITH PNM DS–7–15.1 AND DRAWINGS REFERENCED THEREON.

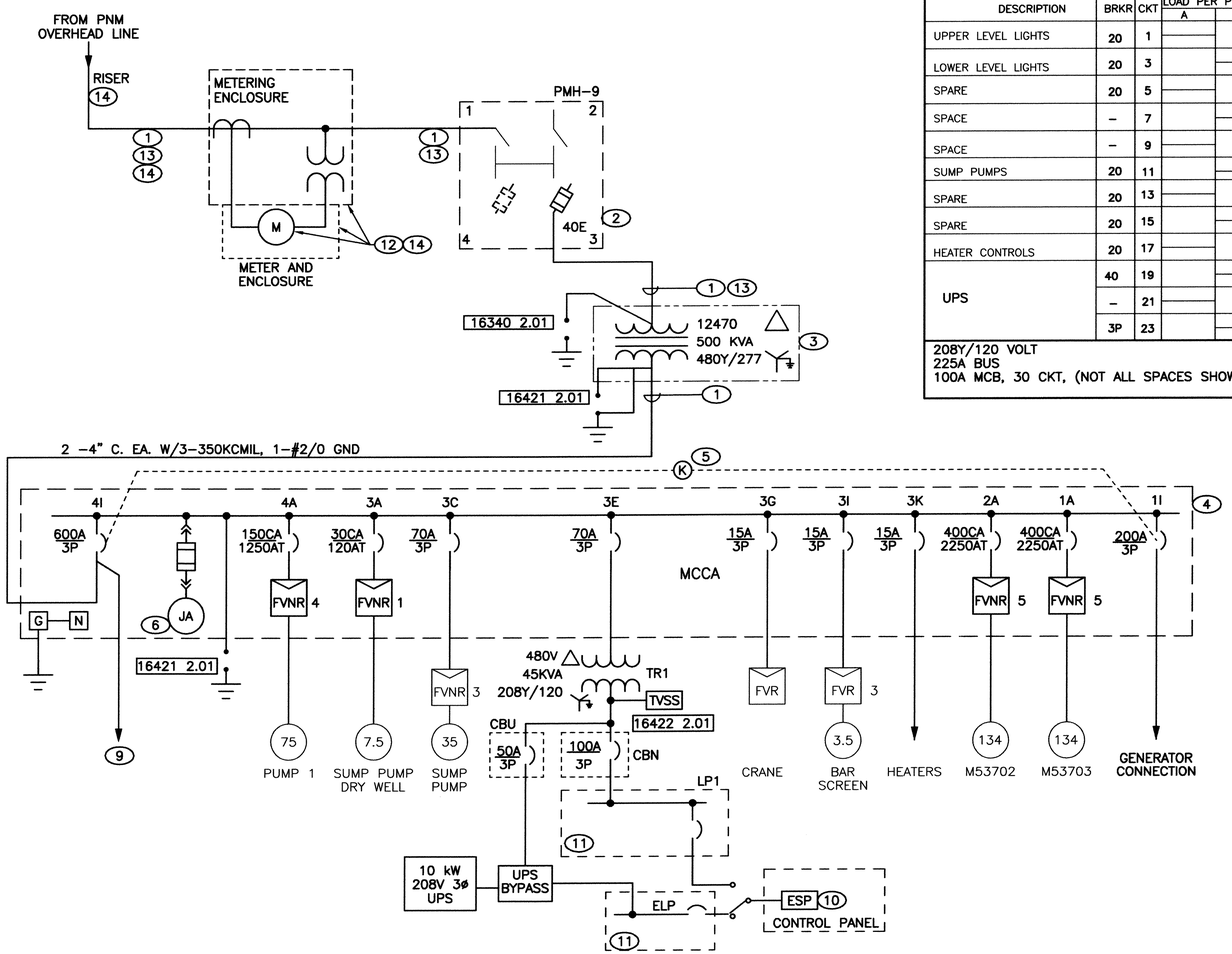

ONE–LINE DIAGRAM

N.T.S.

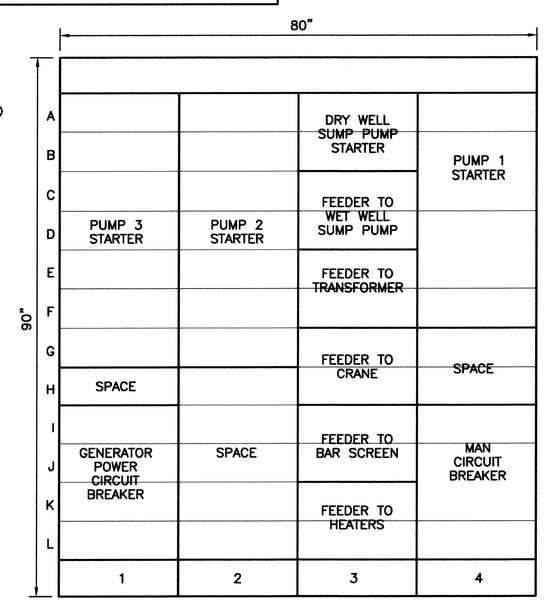

NEW MCC ELEVATION

N.T.S.

© COPYRIGHT

2701 MILES RD SE
ALBUQUERQUE, NM 87106
TEL: 505.242-5700
FAX: 505.242-0673
MOLZEN-CORBIN & Associates
ENGINEERS/ARCHITECTS/PLANNERS

CITY OF ALBUQUERQUE
PUBLIC WORKS DEPARTMENT
ENGINEERING DEVELOPMENT GROUP

TITLE: STORM WATER PUMP STATION #37 REHABILITATION

ELECTRICAL ONE–LINE DIAGRAM

Design Review Committee	City Engineer Approval	Last Design Update	Mo./Day/Yr.	Mo./Day/Yr.
APPROVED JUL 19 2002 DESIGN REVIEW COMMITTEE	APPROVED JUL 19 2002 CITY ENGINEER			

City Project No.	Zone Map No.	Sheet
4682.91	L–14	E–02

6 Of 25

AS BUILT INFORMATION
CONTRACTOR WORK STAKED BY — DATE
INSPECTOR ACCEPTANCE BY — DATE
VERIFICATION BY DRAWINGS — DATE
CONTROL BY MICRO–FILM INFORMATION
RECORDED BY — DATE
NO.

BENCH MARKS

SURVEY INFORMATION
FIELD NOTES
NO. | BY | DATE

ENGINEER'S SEAL
STEVEN E. SORENSON NEW MEXICO 6570 REGISTERED PROFESSIONAL ENGINEER
16 July 2002

NO.	DATE	REMARKS	BY

REVISIONS

DESIGN
DESIGNED BY WNH/HCH DATE 10–00
DRAWN BY RA DATE 7–02
CHECKED BY SES DATE 7–02

EAB37E02 1=1 7/2/02

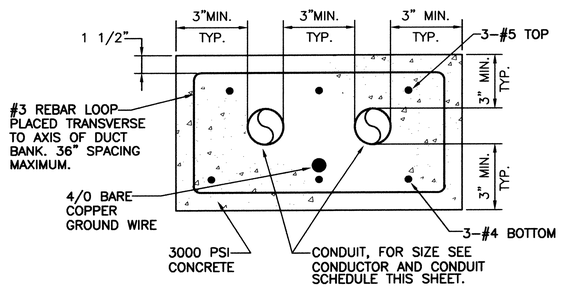

DUCT BANK DETAIL

SCALE: N.T.S.

CONDUCTOR AND CONDUIT SCHEDULE

DB TAG	CONDUIT NUMBER	CONDUIT SIZE	CONDUIT TYPE	CABLE TYPE	CABLE ORIGIN	CABLE DESTINATION
1	P53701	4"	PVC	3-#2 15KV	RISER	METERING
2	P53702	3"	PVC	4-350 THWN	TRANSFORMER	MCC
3	P53703	3"	PVC	4-350 THWN	TRANSFORMER	MCC
4	P53704	4"	PVC	3-#2 15KV	METERING	15KV SWITCH
5	P53705	4"	PVC	4-#2 15KV	15KV SWITCH	TRANSFORMER

KEYED NOTES

1. CONSTRUCT CONCRETE PAD FOR METERING, SWITCHGEAR, AND TRANSFORMER. DO NOT SCALE PAD ON THIS PLAN. SEE DETAIL ON E-12.
2. 4" RED-DYED CONCRETE ENCASED SCHEDULE 40 PVC TO EXISTING POLE. INSTALL ELBOW AND RISER IN ACCORDANCE WITH PNM DRAWING DS-7-15.1.
3. PRIMARY METERING ENCLOSURE METER BASE AND ENCLOSURE AS REQUIRED BY PNM. COMPLY WITH PNM DS-19-79.0 AND DRAWINGS REFERENCED THEREON. DELIVER TO PNM FOR METERING EQUIPMENT INSTALLATION. RETRIEVE AND INSTALL.
4. INSTALL OWNER FURNISHED S&C PMH-9 PRIMARY SWITCH.
5. 500 KVA PADMOUNTED TRANSFORMER.
6. DUCTBANK BETWEEN SECONDARY COMPARTMENT OF NEW TRANSFORMER AND BUILDING. INSTALL CONDUCTORS BETWEEN TRANSFORMER AND NEW MCC. 36 INCH MINIMUM COVER.
7. CONDUIT AND CONDUCTORS BETWEEN METERING ENCLOSURE AND PRIMARY SWITCH AND BETWEEN PRIMARY SWITCH AND TRANSFORMER.
8. ARRANGE WITH PNM TO PROVIDE SERVICE TO NEW TRANSFORMER.
9. ARRANGE WITH PNM TO DISCONNECT EXISTING SERVICE AND PNM OWNED TRANSFORMER.
10. REMOVE CONDUCTOR TO EXISTING MCC AND TO THE EXISTING 5 KV MOTOR STARTERS. REMOVE CONDUIT AS NEEDED TO AVOID INTERFERENCE WITH NEW DUCTBANK 2/3.
11. REMOVE EXISTING JUNCTION BOX, METERING ENCLOSURE, PADMOUNTED TRANSFORMER, AND DISCONNECT SWITCH. ARRANGE WITH PNM FOR REMOVAL AND RETURN OF PNM OWNED METERING DEVICES. RETURN MATERIAL REMOVED TO CITY. REMOVE EXISTING CONCRETE PADS. RESTORE TO MATCH EXISTING GRADE. REMOVE CONDUITS TO MINIMUM 2 FEET BELOW FINISHED GRADE. CAP. ABANDON BALANCE IN PLACE.
12. REMOVE EXISTING CONCRETE PAD. REMOVE CONDUITS TO MINIMUM 2 FEET BELOW FINISHED GRADE. CAP. ABANDON BALANCE IN PLACE. RESTORE TO MATCH EXISTING GRADE.
13. CORE DRILL BELOW GRADE. RUN CONDUITS TO MCC ON LOWER LEVEL. SEAL PENETRATION THROUGH EAST WALL WITH NON-SHRINK GROUT.

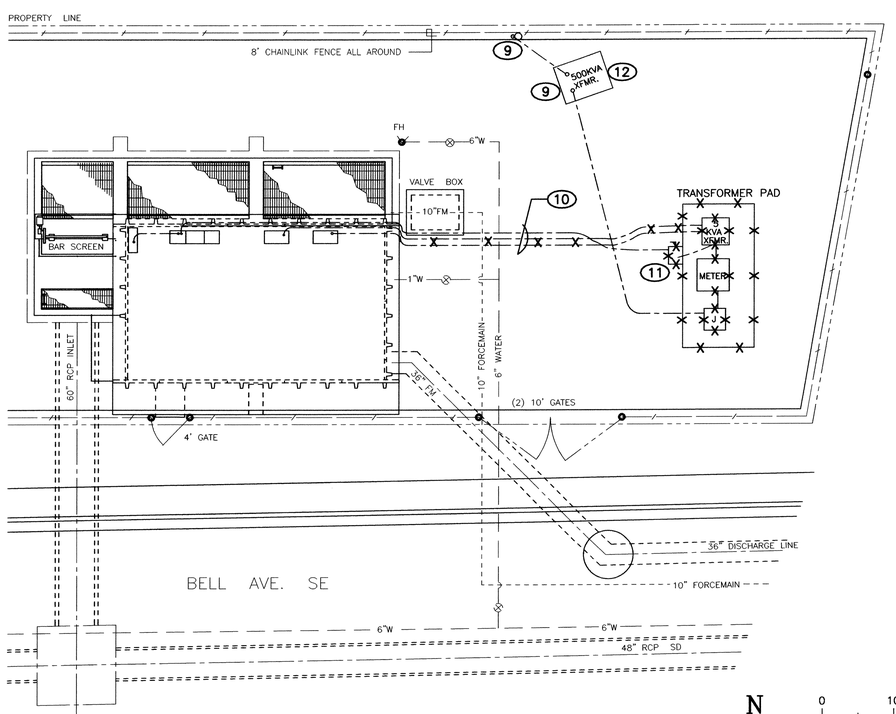

EXISTING STATION NO.37 ELECTRICAL SITE DEMOLITION PLAN

SCALE: 1"=10'-0"

N

0 10 20

1"=10'-0"
GRAPHIC SCALE

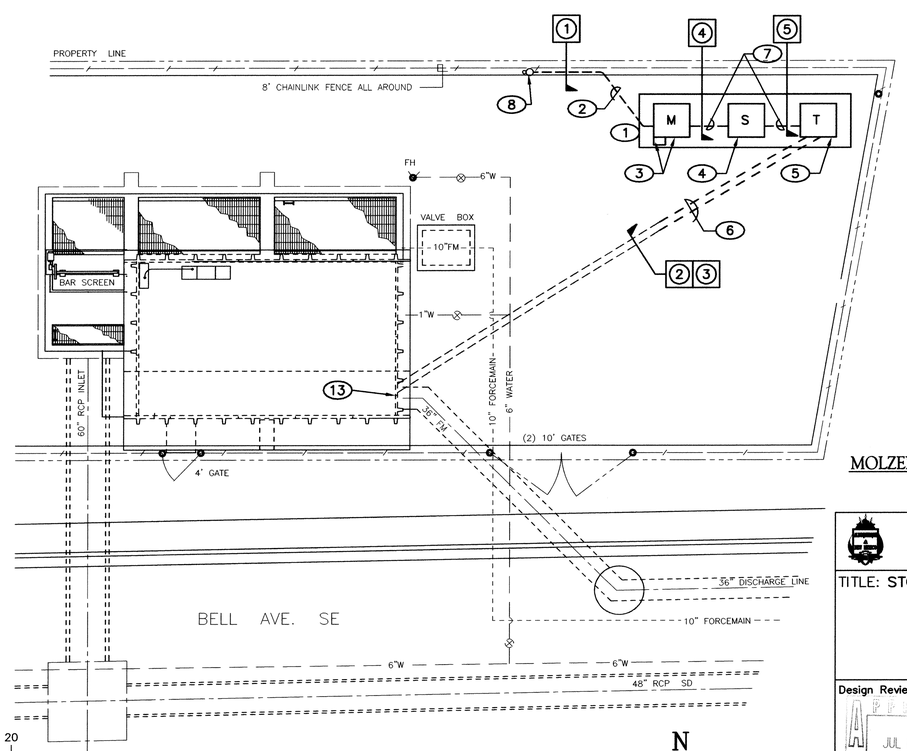

REVISED STATION NO.37 ELECTRICAL SITE PLAN

SCALE: 1"=10'-0"

N

© COPYRIGHT

2701 MILES RD SE
ALBUQUERQUE, NM 87106
TEL: 505.242-5700
FAX: 505.242-0673

MOLZEN-CORBIN & Associates
ENGINEERS/ARCHITECTS/PLANNERS

AS BUILT INFORMATION

CONTRACTOR | DATE
WORK STAKED BY | DATE
INSPECTOR ACCEPTANCE BY | DATE
VERIFICATION BY | DATE
DRAWINGS CORRECTED BY | DATE

MICRO-FILM INFORMATION

RECORDED BY | DATE
NO.

BENCH MARKS

SURVEY INFORMATION

FIELD NOTES

NO.	BY	DATE

ENGINEER'S SEAL

STEVEN E. SORENSON
NEW MEXICO
6570
NEW MEXICO REGISTERED PROFESSIONAL ENGINEER

16 July 2002

REVISIONS

NO.	DATE	REMARKS	BY

DESIGN

DESIGNED BY	WNH/HCH	DATE 10-00
DRAWN BY	RA	DATE 7-02
CHECKED BY	SES	DATE 7-02

CITY OF ALBUQUERQUE
PUBLIC WORKS DEPARTMENT
ENGINEERING DEVELOPMENT GROUP

TITLE: STORM WATER PUMP STATION #37 REHABILITATION

BELL STATION #37
ELECTRICAL SITE PLAN

Design Review Committee	City Engineer Approval	Last Design Update	Mo./Day/Yr.	Mo./Day/Yr.
APPROVED JUL 19 2002 DESIGN REVIEW COMMITTEE	APPROVED JUL 19 2002 CITY ENGINEER			

City Project No.	Zone Map No.	Sheet
4682.91	L-14	E-03

7 Of 25

EAB37E03 1=10 7/2/02

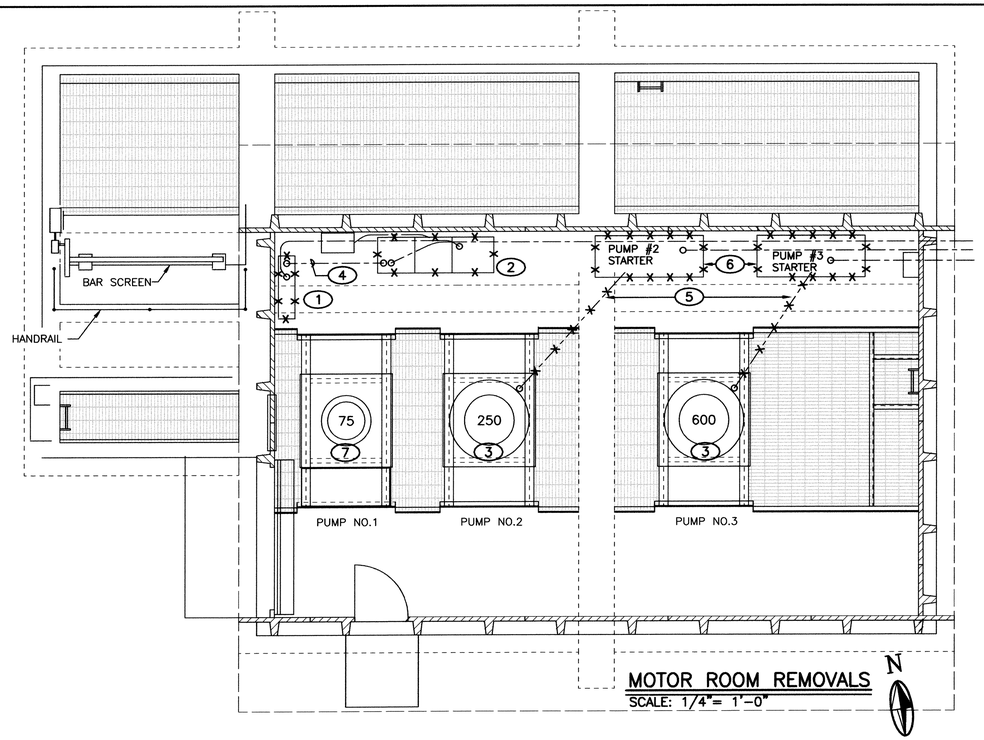

MOTOR ROOM REMOVALS
SCALE: 1/4"= 1'-0"

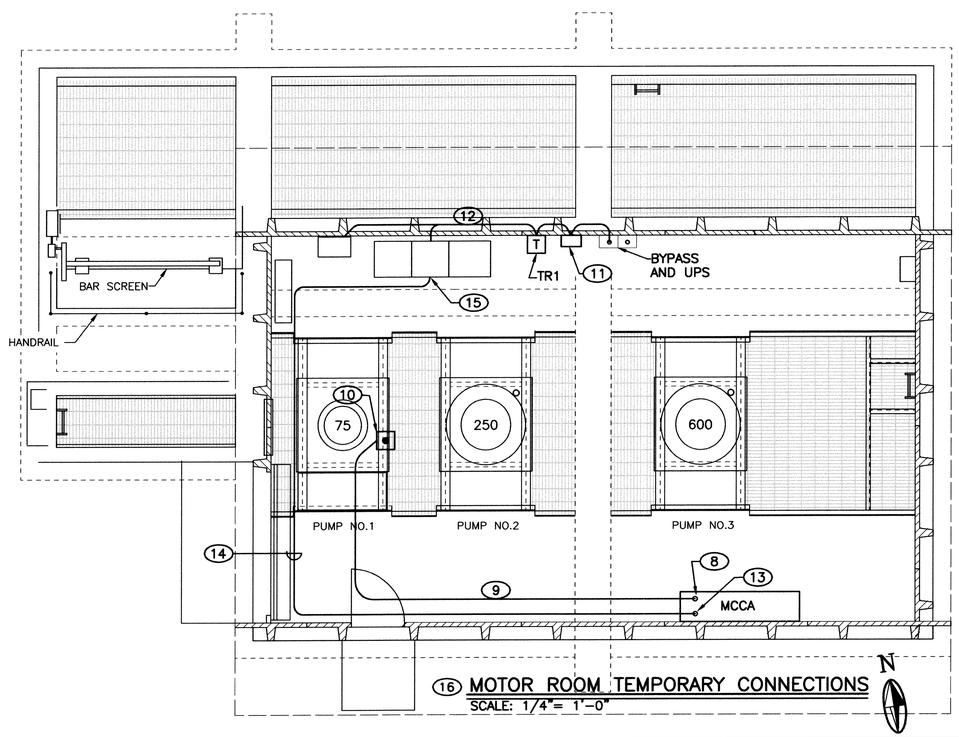

(16) MOTOR ROOM TEMPORARY CONNECTIONS
SCALE: 1/4"= 1'-0"

KEYED NOTES

(1) REMOVE EXISTING MOTOR CONTROL CENTER. DISPOSE OF AS DIRECTED BY OWNER.

(2) REMOVE STARTER/CONTROLLER. DISPOSE OF AS DIRECTED BY OWNER.

(3) DISASSEMBLE AS NECESSARY AND REMOVE PUMP MOTORS #2 AND #3. DISPOSE OF AS DIRECTED BY OWNER.

(4) REMOVE CONDUCTORS BETWEEN MOTOR CONTROL CENTER AND STARTER/CONTROLLER.

(5) DISCONNECT AND REMOVE CONDUCTORS BETWEEN STARTERS AND PUMP #2 AND #3 MOTORS.

(6) REMOVE 4160V STARTER FOR PUMP #2 AND #3. DISPOSE OF THESE STARTERS AND A THIRD SIMILAR STARTER LOCATED OUTSIDE EAST OF THE BUILDING.

(7) AT POINT SHOWN IN SEQUENCE OF CONSTRUCTION, REMOVE EDDY CURRENT CLUTCH ASSEMBLY AND DISPOSE OF AS DIRECTED BY OWNER. REINSTALL MOTOR TO PROVIDE DIRECT DRIVE TO PUMP SHAFT. FURNISH COUPLERS/ADAPTERS AS NECESSARY.

(8) CORE DRILL FLOOR FOR 3/4" RMC. TEMPORARILY USE FOR NOTE 9 CABLE.

(9) 14 – 2 PLUS GROUND SJO CORD. ROUTE THROUGH LOWER LEVEL TO PROTECT FROM DAMAGE.

(10) HEAVY–DUTY OIL–TIGHT OFF/RUN SWITCH FOR PUMP 1. MOUNT IN NEMA 1 ENCLOSURE NEAR PUMP, NORTH OF VALVE.

(11) POWER UPS FROM TR1 WITH 4 #8 PLUS GROUND. MOUNT CBU IN NEMA 1 ENCLOSURE APPROXIMATELY 48 INCHES AFF. THIS REMAINS AS PART OF THE PERMANENT INSTALLATION.

(12) 14 – 2 PLUS GROUND SJO CORD. ROUTE HIGH ON WALL. CONNECT TO POWER TELEMETRY UNIT. PROTECT AT UPS END WITH TEMPORARY IN–LINE 5A FUSE.

(13) RUN CIRCUIT TO TOP OF MCC. CONNECT TO GENERATOR CB.

(14) 3 #1, #6 GROUND, RNMC OR EMT.

(15) FIELD VERIFY LOCATION OF PUMP 1 STARTER CB. REMOVE CONDUCTORS FROM LOAD SIDE OF CB. CONNECT TEMPORARY FEEDER.

(16) REMOVE TEMPORARY ITEMS WHEN NO LONGER REQUIRED.

0 4' 8'
1/4"=1'-0"
GRAPHIC SCALE

© COPYRIGHT

AS BUILT INFORMATION
CONTRACTOR DATE
WORK STAKED BY DATE
INSPECTOR'S ACCEPTANCE BY DATE
VERIFICATION BY DATE
DRAWINGS CORRECTED BY DATE
MICRO-FILM INFORMATION
RECORDED BY DATE
NO.

BENCH MARKS

SURVEY INFORMATION
FIELD NOTES

NO.	BY	DATE

ENGINEER'S SEAL
STEVEN E. SORENSON
NEW MEXICO 6570
REGISTERED PROFESSIONAL ENGINEER
16 July 2002

NO.	DATE	REMARKS	BY

REVISIONS

DESIGN

DESIGNED BY	SES	DATE 5-01
DRAWN BY	RA	DATE 7-02
CHECKED BY	SES	DATE 7-02

2701 MILES RD SE
ALBUQUERQUE, NM 87106
TEL: 505.242-5700
FAX: 505.242-0673
MOLZEN-CORBIN & Associates
ENGINEERS/ARCHITECTS/PLANNERS

CITY OF ALBUQUERQUE
PUBLIC WORKS DEPARTMENT
ENGINEERING DEVELOPMENT GROUP

TITLE: STORM WATER PUMP STATION #37 REHABILITATION

BELL STATION #37
MOTOR ROOM ELECTRICAL REMOVALS AND TEMPORARY CONNECTIONS

Design Review Committee	City Engineer Approval	Last Design Update	Mo./Day/Yr.	Mo./Day/Yr.
APPROVED JUL 19 2002 DESIGN REVIEW COMMITTEE	APPROVED JUL 19 2002 CITY ENGINEER			

City Project No.	Zone Map No.	Sheet
4682.91	L–14	E–04 8 Of 25

EA537E04 1=1 7/2/02

CONDUCTOR AND CONDUIT SCHEDULE						
DESIG-NATION	NUMBER OF RUNS	CONDUIT SIZE	FROM	TO	WIRE	REMARKS
P3701	1	2"	MCC	GENERATOR	3-4/0, 1-#2 GROUND	
P3702	1	3/4"	MCC	HEATER	3-#12, 1-#12 GROUND	
P3703	1	1-1/2"	MCC	M53701	3-#1, 1-#6 GROUND	
P3704	2	3"	MCC	M53702	CABLE BY MOTOR MFG.	
P3705	2	3"	MCC	M53703	CABLE BY MOTOR MFG.	
P3706	1	3/4"	MCC	DW SUMP	3-#12, 1-#12 GROUND	
P3707	1	3/4"	MCC	SPCP	3-#8, 1-#10 GROUND	
P3708	1	3/4"	MCC	CRANE	3-#12, 1-#12 GROUND	
P3709	1	3/4"	MCC	BSCP	3-#12, 1-#12 GROUND	
P3710	1	1"	MCC	TR1	3-#4, 1-#8 GROUND	
P3711	1	1"	TR1	LP1	4-#2, #8 GROUND	VIA CBN ON WALL
P3712	1	1"	TR1	UPS BYPASS	4-#8, 1-#8 GROUND	VIA CBU ON WALL
P3712A	1	1"	UPS BYPASS	UPS	4-#8, 1-#8 GROUND	
P3713	1	1"	UPS BYPASS	ELP	4-#8, 1-#8 GROUND	
P3713A	1	1"	UPS	UPS BYPASS	4-#8, 1-#8 GROUND	
P3714	1	3/4"	ELP	FV53701	3-#10, 1-#10 GROUND	
P3715	1	3/4"	ELP	FV53702	3-#10, 1-#10 GROUND	
P3716	1	3/4"	ELP	FV53703	3-#10, 1-#10 GROUND	

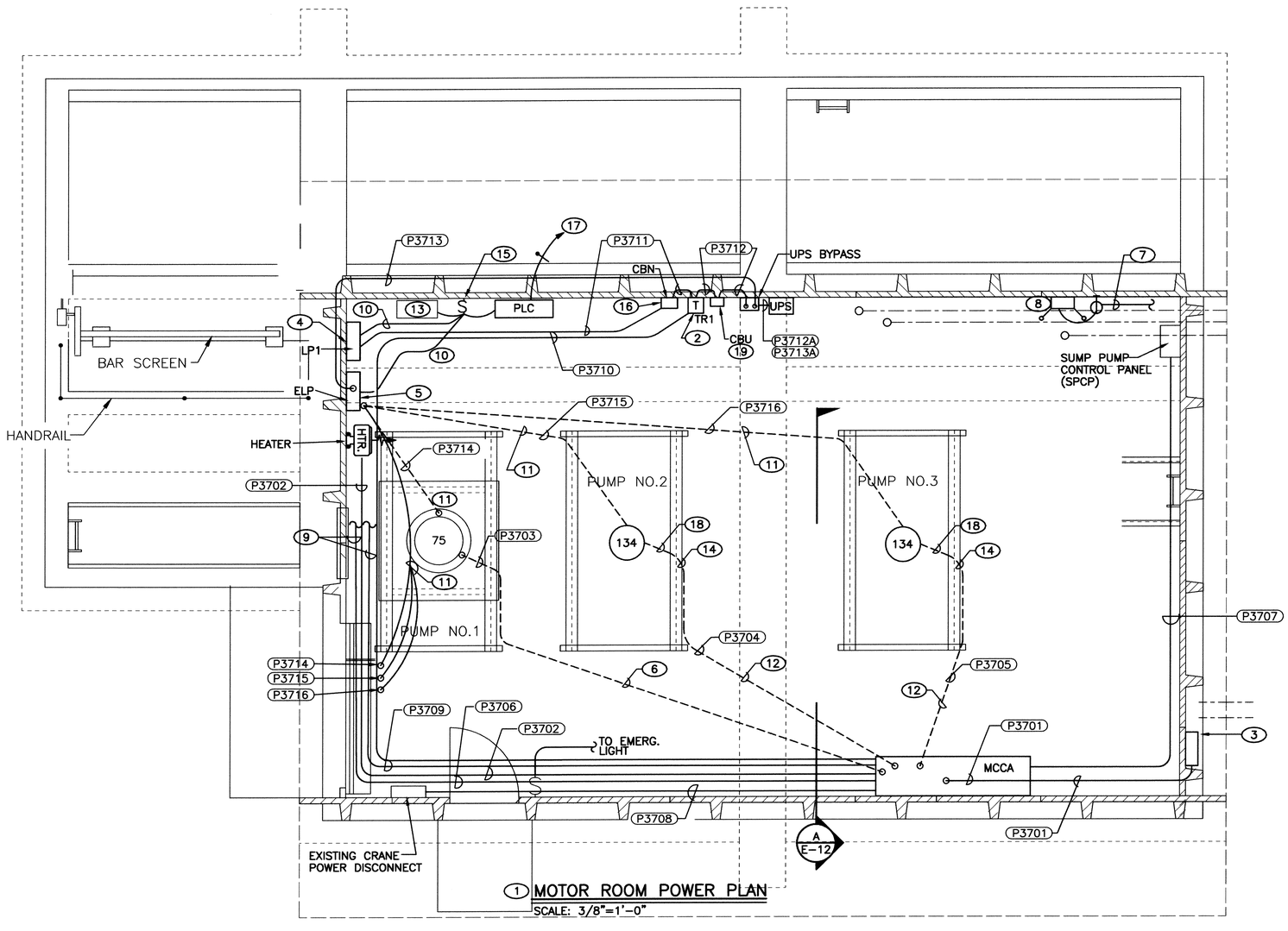

1 MOTOR ROOM POWER PLAN
SCALE: 3/8"=1'-0"

KEYED NOTES CONTINUED

15. 20 A DPDT 250 V TOGGLE SWITCH. INSTALL NP: SOURCE SELECTOR SWITCH FOR PLC AND TELEMETRY. INSTALL NP BY UPPER SWITCH POSITION: ELP. INSTALL NP BY LOWER SWITCH POSITION: LP1.

16. CIRCUIT BREAKER CBN IN NEMA 1 ENCLOSURE. NP: CBN, DISCONNECT FOR LP1.

17. RUN 3/4" CONDUIT UP FROM PLC, THEN ALONG WALL EASTWARD. CORE DRILL WALL, INSTALL CONDUIT, SEAL PENETRATION WITH SILICONE SEAL. RUN DOWN WALL THEN UNDERGROUND TO GROUNDING RING AT TRANSFORMER. INSTALL INSULATED #6 GROUND FROM RING TO ISOLATED GROUND BAR AT PLC ENCLOSURE.

18. PUMP CABLE SUSPENDED FROM CABLE GRIP.

19. CIRCUIT BREAKER CBU IN NEMA 1 ENCLOSURE. NP: CBU, DISCONNECT FOR UPS.

KEYED NOTES

1. FOR GRATING SEE DRAWING E-04.

2. TR1 (NP: TR1. FED FROM MCCA. FEEDS UPS VIA CBU AND BYPASS. FEEDS LP1 VIA CBN.)

3. 16X16X6 INCH NEMA 3R HINGED COVER ENCLOSURE. MOUNT WITH BOTTOM AT 36" AFG. INSTALL 3 POLE POWER DISTRIBUTION BLOCK FOR PHASE CONDUCTORS, SQUARE D LBA360101, AND FOR GROUND, SQUARE D LBA162101, OR ENGINEER APPROVED EQUIVALENT. INSTALL TWO INCH CLOSE NIPPLE WITH DOUBLE LOCK NUTS AND CAP THROUGH BOTTOM OF BOX. NP: CONNECTION BOX FOR PORTABLE GENERATOR.

4. NEW PANELBOARD LP1 (NP: LP1. 208 V 3 PHASE. FED FROM TR1 VIA CBN.) LOCATE TO FACILITATE RECONNECTING LOADS OF EXISTING PANELBOARD LP THAT BECOME DISCONNECTED WHEN MCC1 IS REMOVED. RECONNECT LOADS. DO NOT SPLICE EXISTING CONDUCTORS. REMOVE AND REINSTALL CONDUCTORS WHICH ARE TOO SHORT OR ARE DAMAGED. OPTION TO REMOVAL AND REINSTALLATION OF SHORT CONDUCTORS: INSTALL TERMINAL BOX BELOW LP1. INSTALL TERMINAL BOARDS. LAND EXISTING CONDUCTORS. RUN NEW CONDUCTORS TO LP1. MATCH WIRE COLORS. MARK TBS. MARK WIRES.

5. ELP (NP: ELP. 208 V 3 PHASE. FED FROM UPS VIA UPS BYPASS.)

6. CORE DRILL FLOOR AT LOCATION OF STARTER FOR PUMP 1. INSTALL CONDUIT AND SEAL WITH SILICONE SEAL. ROUTE NEW CONDUIT FROM MCCA TO PUMP 1 ON CEILING OF PUMP ROOM THEN UP THROUGH GRATING.

7. 2 #12 H&N, 1#12 GROUND FROM LINE SIDE OF SWITCH BY SOUTH DOOR, 3/4" RMC.

8. INSTALL EMERGENCY LIGHT SIX INCHES BELOW CEILING. INSTALL 15 A SIMPLEX RECEPTACLE. INSTALL CORD AND CAP TO CONNECT LIGHT TO RECEPTACLE.

9. LOCATE CONDUITS FROM MCC1 TO BAR SCREEN AND TO DRY WELL SUMP PUMP. MARK. REMOVE EXISTING CONDUCTORS. EXTEND CONDUITS OVERHEAD FROM LOCATION OF MCC1 TO MCCA. INSTALL AND CONNECT NEW CONDUCTORS TO MATCH EXISTING.

10. 2 #12 AND #12 GROUND FROM LP1 AND FROM ELP TO SWITCH.

11. RUN CONDUITS UP FROM ELP, THEN HIGH ON WALL SOUTHWARD, THEN DOWN. PENETRATE FLOOR CLOSE TO WEST WALL. SEAL PENETRATIONS WITH SILICONE SEAL. RUN CONDUIT DOWN TO LOWER FLOOR. RUN TO RESPECTIVE VALVE ACTUATOR PARALLEL TO CONTROL CONDUITS. SEE E-06 NOTE 5.

12. RUN ON CEILING OF PUMP ROOM.

13. EXISTING TELEMETRY UNIT. FIELD VERIFY LOCATION. FEED FROM SOURCE SELECTOR SWITCH WITH 3 #12.

14. LOCATE CABLE GRIPS DIRECTLY ADJACENT TO EDGE OF OPENING FOR ACCESSIBILITY FROM UPPER FLOOR.

AS BUILT INFORMATION
CONTRACTOR WORK STAKED BY DATE
INSPECTOR'S ACCEPTANCE BY DATE
VERIFICATION BY DATE
DRAWINGS CORRECTED BY DATE
MICRO-FILM INFORMATION
RECORDED BY DATE
NO.

BENCH MARKS

SURVEY INFORMATION
FIELD NOTES

NO.	BY	DATE

ENGINEER'S SEAL
STEVEN E. SORENSON NEW MEXICO 6570 PROFESSIONAL ENGINEER
16 July 2002

NO.	DATE	REMARKS	BY

REVISIONS

DESIGN
DESIGNED BY HCH/SES DATE 6-01
DRAWN BY RA DATE 7-02
CHECKED BY SES DATE 7-02

2701 MILES RD SE
ALBUQUERQUE, NM 87106
TEL: 505.242.5700
FAX: 505.242.0673
MOLZEN-CORBIN & Associates
ENGINEERS/ARCHITECTS/PLANNERS

N

0 4' 2'
SCALE: 3/8"=1'-0"
GRAPHIC SCALE

© COPYRIGHT

CITY OF ALBUQUERQUE
PUBLIC WORKS DEPARTMENT
ENGINEERING DEVELOPMENT GROUP

TITLE: STORM WATER PUMP STATION #37 REHABILITATION

BELL STATION #37
MOTOR ROOM POWER PLAN

Design Review Committee	City Engineer Approval	Last Design Update	Mo./Day/Yr.	Mo./Day/Yr.
APPROVED JUL 19 2002 DESIGN REVIEW COMMITTEE	APPROVED JUL 19 2002 CITY ENGINEER			

City Project No.	Zone Map No.	Sheet	
4682.91	L-14	E-05	9 Of 25

EAB37E05.DWG 1=1 7/2/02

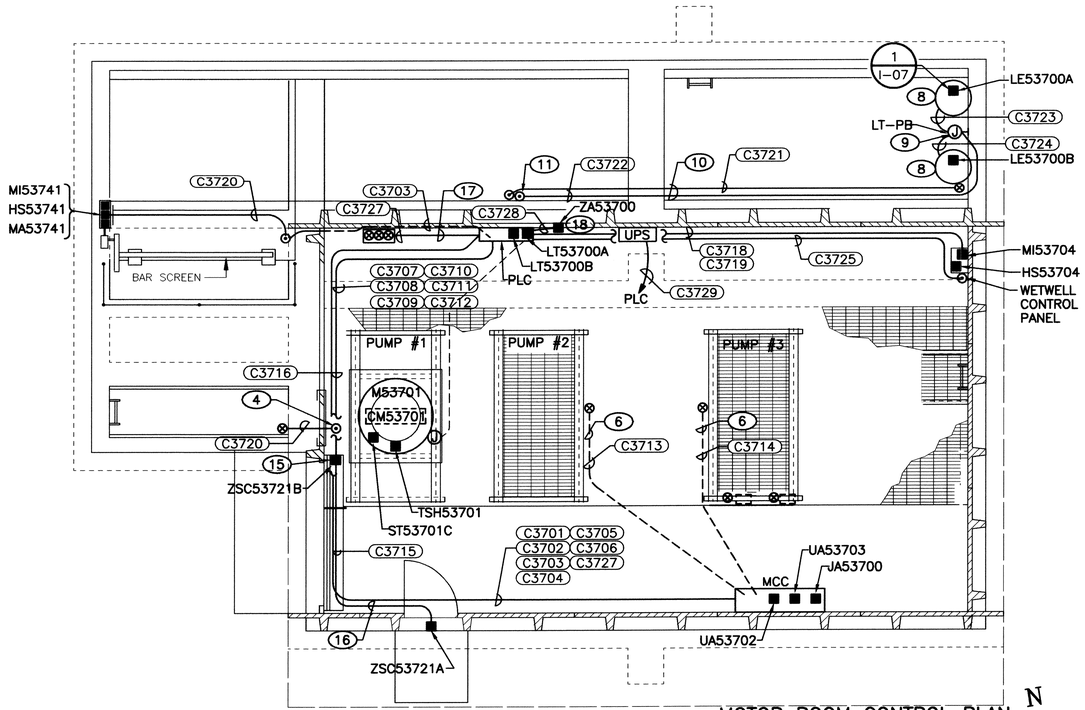

MOTOR ROOM CONTROL PLAN

SCALE: 1/4"=1'-0" (19)

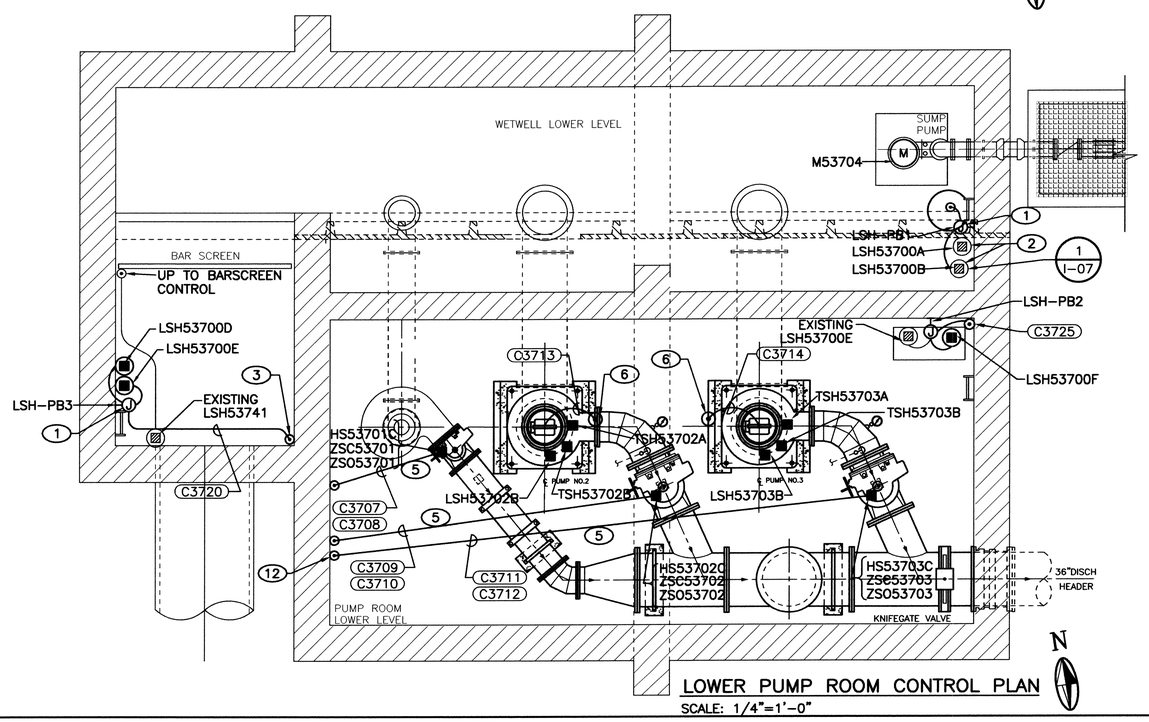

LOWER PUMP ROOM CONTROL PLAN

SCALE: 1/4"=1'-0"

KEYED NOTES CONTINUED

(10) RUN CONDUITS FOR LEVEL TRANSMITTERS AND WET WELL FLOATS ALONG SOUTH SIDE OF FLOOR SLAB.

(11) TURN LEVEL TRANSMITTER AND WET WELL FLOAT CONDUITS UP TO WALL BEHIND PLC. INSTALL LB CONNECTOR AND PENETRATE WALL TO PLC CABINET. CONNECT UPPER FLOAT TO TELEMETRY. CONNECT OTHER TO PLC.

(12) CORE DRILL FLOOR, TYPICAL.

(13) NOT USED.

(14) NOT USED.

(15) INSTALL POSITION SWITCH AT BOTTOM OF ROLL-UP DOOR. RUN CONDUITS UP WALL THEN ALONG CEILING TO PLC.

(16) CONNECT BETWEEN EXISTING SWITCH AT PERSONNEL DOOR AND SWITCH AT ROLL-UP DOOR. INSTALL CONDUIT AND CONDUCTORS TO MAKE A SERIES CONNECTION WITH THE DOOR SWITCHES FOR A PLC INPUT.

(17) INSTALL ONE INCH CONDUIT WITH PULL STRING BETWEEN NEW PLC ENCLOSURE AND EXISTING COMMUNICATIONS ENCLOSURE. INSTALL #12 THWN TO BOND PLC GROUND TO COMMUNICATIONS SYSTEM GROUND.

(18) INSTALL FEDERAL SIGNAL MODEL 55 120VAC RESONATING HORN WITH COILED PROJECTOR AT EIGHT FEET AFF.

(19) FOR GRATING, SEE DRAWING E-04.

KEYED NOTES

(1) 6" X 6" NEMA-4 FLOAT J-BOX ON WALL OF STATION, ADJACENT TO LADDER. OFFSET CONDUITS TOWARD SOUTH.

(2) WET WELL HIGH LEVEL ALARMS.

(3) RUN CONDUIT FOR FLOAT CONDUCTORS UP WALL OF INFLUENT CHANNEL. SEE MOTOR ROOM CONTROL PLAN FOR CONTINUATION.

(4) PENETRATE WALL OF PUMP ROOM. SEAL WITH PAINTABLE SILICON SEAL. RUN CONDUIT UP WALL THEN ALONG CEILING TO PLC-PB.

(5) ROUTE CONDUITS FROM VALVE ACTUATORS ALONG UNDER SIDE OF PIPE ON FLOOR TO WEST WALL THEN UP AND ALONG WALL TO PLC.

(6) PROVIDE AND INSTALL PUMP CONTROL CABLE WITH 12 -#14 THWN. INSTALL CABLE GRIP AT JUNCTION BOX. LAND ALL CABLE CONDUCTORS ON TERMINALS. SUPPORT CABLE WITH KELLEMS GRIP.

(7) NOT USED.

(8) INSTALL ADMITTANCE LEVEL ELEMENT IN INDICATED AREA.

(9) MOUNT PULLBOX FOR LEVEL ELEMENTS ON WALL OF WET WELL LOCATE IN ACCESSIBLE AREA BELOW SUMP PUMP GRATE HATCH. CONNECT TO EACH TRANSMITTER WITH LFMC.

CONDUCTOR AND CONDUIT SCHEDULE

DESIG-NATION	NUMBER OF RUNS	CONDUIT SIZE	CONDUIT TYPE	FROM	TO	WIRE	REMARKS
C3701	1	3/4"	RMC	PLC	MCC-A	TWSH	M53701
C3702	1		RMC	PLC	MCC-A	TWSH	M53701
C3703	1	3/4"	RMC	PLC	MCC-A	2 -TWSH	M53702
C3704	1	3/4"	RMC	PLC	MCC-A	3-#14, 1-#14 GND	M53702
C3705	1	3/4"	RMC	PLC	MCC-A	2- TWSH	M53703
C3706	1	3/4"	RMC	PLC	MCC-A	3-#14, 1-#14 GND	M53703
C3707	1	1"	RMC	PLC	FV1	4 -TWSH	VALVE ACTUATORS
C3708	1	3/4"	RMC	PLC	FV1	8-#14, 1-#14 GND	VALVE ACTUATORS
C3709	1	1"	RMC	PLC	FV2	4 -TWSH	VALVE ACTUATORS
C3710	1	3/4"	RMC	PLC	FV2	8-#14, 1-#14 GND	VALVE ACTUATORS
C3711	1	1"	RMC	PLC	FV3	4- TWSH	VALVE ACTUATORS
C3712	1	3/4"	RMC	PLC	FV3	8-#14, 1-#14 GND	VALVE ACTUATORS
C3713	1	2"	RMC	M53702	MCC-A	12-#14, 1-#14 GND	PUMP CABLE
C3714	1	2"	RMC	M53703	MCC-A	12-#14, 1-#14 GND	PUMP CABLE
C3715	1	3/4"	RMC	ZSC53721A	ZSC53721B	1 -TWSH	INTRUSION ALARM
C3716	1	3/4"	RMC	ZSC53721B	PLC	1 -TWSH	INTRUSION ALARM
C3718	1	3/4"	RMC	PLC	SPCP	3 -TWSH	SUMP PUMP STATUS
C3719	1	3/4"	RMC	PLC	SPCP	2-#14. 1-#14 GMD	SUMP PUMP RUN
C3720	1	3/4"	RMC	PLC	BSCP	1- 3PR TWSP	EXISTING CONDUIT
C3721	1	3/4"	RMC	PLC	LSH-PB1	2- TWSH	HIGH LEVEL FLOATS WW
C3722	1	1"	RMC	PLC	LT-PB	2- RF CABLE	LEVEL TRANSMITTER
C3723	1	3/4"	LFMC	LE53700A	LT-PB	1- RF CABLE	LEVEL TRANSMITTER
C3724	1	3/4"	LFMC	LE53700B	LT-PB	1 -RF CABLE	LEVEL TRANSMITTER
C3725	1	3/4"	RMC	PLC	LSH-PB2	2- TWSH	HIGH LEVEL SWITCH DW
C3726	1	3/4"	RMC	PLC	LSH-PB3	2- TWSH	HIGH LEVEL SWITCH BS
C3727	1	3/4"	RMC	PLC	MCC-A	1- TWSH	JA53700
C3728	1	3/4"	RMC	PLC	ZA53700	2-#12, 1-#12 GND	ALARM HORN
C3729	1	3/4"	RMC	UPS	PLC	1-TWSH	JA53700A
C3730							

2701 MILES RD SE
ALBUQUERQUE, NM 87106
TEL: 505.242-5700
FAX: 505.242-0673
MOLZEN-CORBIN & Associates
ENGINEERS/ARCHITECTS/PLANNERS

AS BUILT INFORMATION

CONTRACTOR WORK STAKED BY DATE
INSPECTOR'S ACCEPTANCE BY DATE
VERIFICATION BY DATE
DRAWINGS CORRECTED BY DATE
MICRO-FILM INFORMATION
RECORDED BY DATE
NO.

BENCH MARKS

SURVEY INFORMATION
FIELD NOTES

NO.	BY	DATE

ENGINEER'S SEAL

STEVEN E. SORENSON
NEW MEXICO
6570
REGISTERED PROFESSIONAL ENGINEER
16 July 2002

NO.	DATE	REMARKS	BY

REVISIONS

DESIGN

DESIGNED BY	WNH/HCH	DATE 10-00
DRAWN BY	SES	DATE 7-02
CHECKED BY	SES	DATE 7-02

CITY OF ALBUQUERQUE
PUBLIC WORKS DEPARTMENT
ENGINEERING DEVELOPMENT GROUP

TITLE: STORM WATER PUMP STATION #37 REHABILITATION

BELL STATION #37
CONTROL LAYOUT AND CONDUIT PLAN

Design Review Committee: APPROVED JUL 19 2002 DESIGN REVIEW COMMITTEE

City Engineer Approval: APPROVED JUL 19 2002 CITY ENGINEER

Last Design Update | Mo./Day/Yr. | Mo./Day/Yr.

0 4' 8'
1/4"=1'-0"
GRAPHIC SCALE

© COPYRIGHT

City Project No. 4682.91 | Zone Map No. L-14 | Sheet E-06 | 10 Of 25

EAB37E06.DWG 1=48 7/2/02

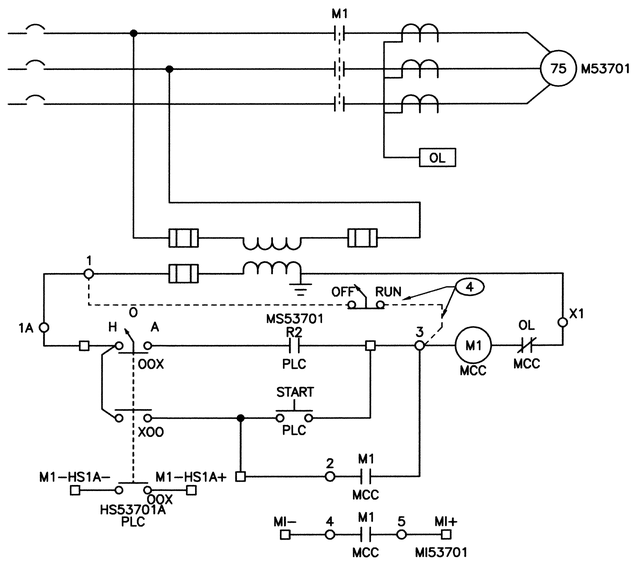

SCHEMATIC DIAGRAM FOR LIFT PUMP #1

N.T.S.

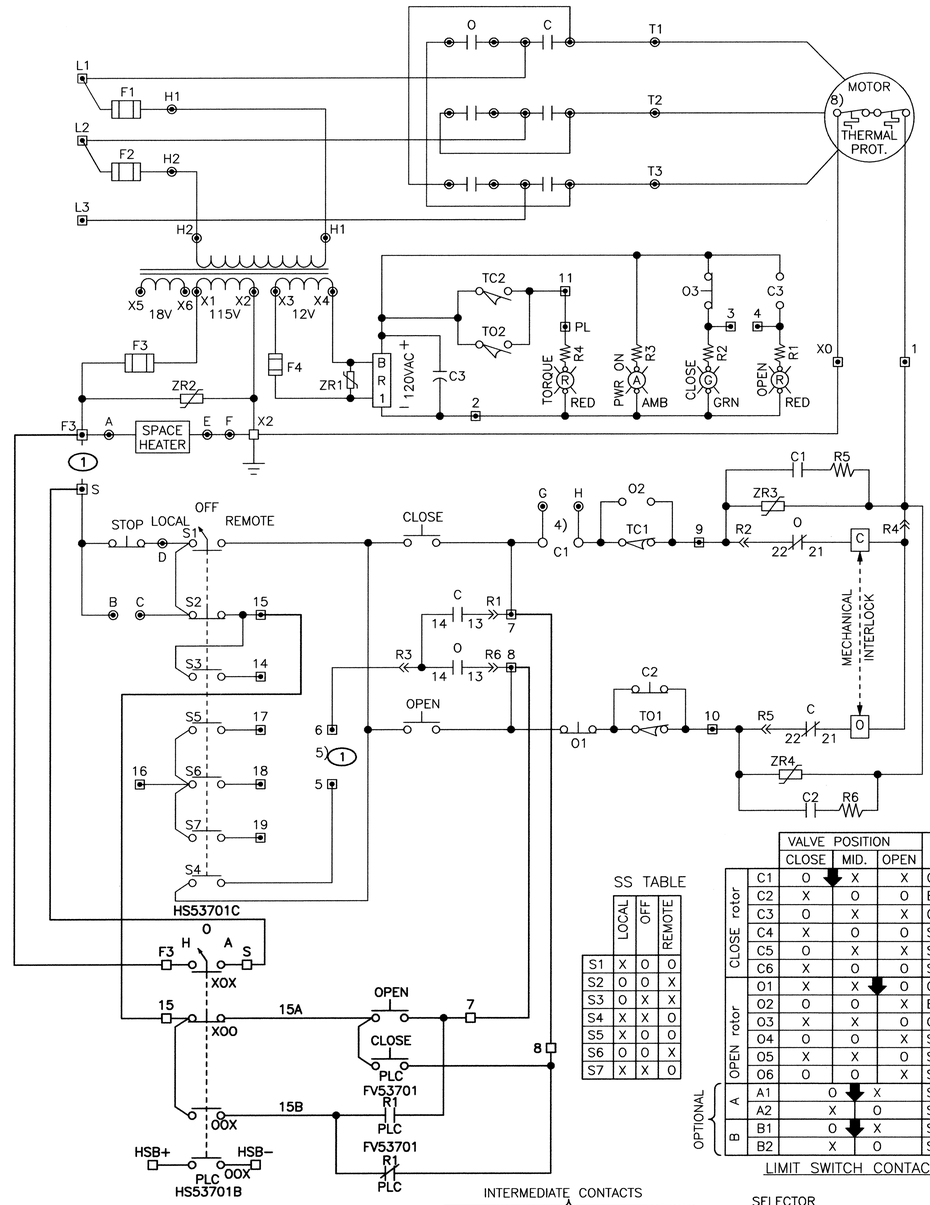

KEYED NOTES

1. REMOVE JUMPER.
2. VALVE CONTROL SHOWN IN CLOSED POSITION WITH SELECTOR SWITCH IN LOCAL.
3. LIGHT PEN WEIGHT INDICATES COMPONENTS INTEGRAL TO VALVE OPERATOR.
4. TEMPORARY SWITCH AND CONNECTIONS.

SS TABLE

	LOCAL	OFF	REMOTE
S1	X	O	O
S2	O	O	X
S3	O	X	X
S4	X	X	O
S5	X	O	O
S6	O	O	X
S7	X	X	O

LIMIT SWITCH CONTACTS

		VALVE POSITION			CONTACT FUNCTION
		CLOSE	MID.	OPEN	
CLOSE rotor	C1	O	X	X	CLOSE COIL
	C2	X	O	O	BYPASS TO1
	C3	O	X	X	OPEN LAMP
	C4	X	O	O	SPARE
	C5	O	X	X	SPARE
	C6	X	O	O	SPARE
OPEN rotor	O1	X	X	O	OPEN COIL
	O2	O	O	X	BYPASS TC1
	O3	X	X	O	CLOSE LAMP
	O4	O	O	X	SPARE
	O5	X	X	O	SPARE
	O6	O	O	X	SPARE
OPTIONAL A	A1	O	X		SPARE
	A2	X	O		SPARE
OPTIONAL B	B1	O	X		SPARE
	B2	X	O		SPARE

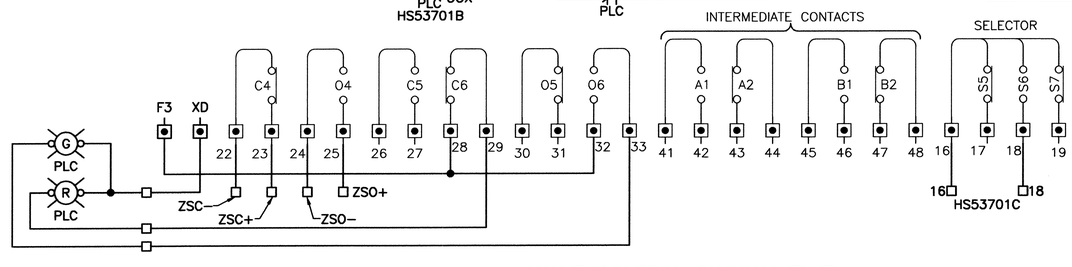

VALVE CONTROL DIAGRAM 2 3

N.T.S.

© COPYRIGHT

2701 MILES RD SE
ALBUQUERQUE, NM 87106
TEL: 505.242.5700
FAX: 505.242.0673
MOLZEN-CORBIN & Associates
ENGINEERS/ARCHITECTS/PLANNERS

CITY OF ALBUQUERQUE
PUBLIC WORKS DEPARTMENT
ENGINEERING DEVELOPMENT GROUP

TITLE: STORM WATER PUMP STATION #37 REHABILITATION

BELL PUMP STATION #37
LIFT PUMP #1
SCHEMATICS

Design Review Committee	City Engineer Approval	Last Design Update	Mo./Day/Yr.	Mo./Day/Yr.
APPROVED JUL 19 2002 DESIGN REVIEW COMMITTEE	APPROVED JUL 19 2002 CITY ENGINEER			

City Project No.	Zone Map No.	Sheet
4682.91	L-14	E-07 11 Of 25

AS BUILT INFORMATION

CONTRACTOR WORK STAKED BY — DATE
INSPECTOR'S ACCEPTANCE BY — DATE
FIELD VERIFICATION BY — DATE
DRAWINGS CORRECTED BY — DATE
MICRO-FILM INFORMATION
RECORDED BY — DATE
NO.

BENCH MARKS

SURVEY INFORMATION
FIELD NOTES

NO.	BY	DATE

ENGINEER'S SEAL
STEVEN E. SORENSON
NEW MEXICO 6570
REGISTERED PROFESSIONAL ENGINEER
16 July 2002

NO.	DATE	REMARKS	BY

REVISIONS

		DATE
DESIGNED BY	WNH/HCH	10-00
DRAWN BY	RA	7-02
CHECKED BY	SES	7-02

EAB37E07.DWG 1=1 7/3/02

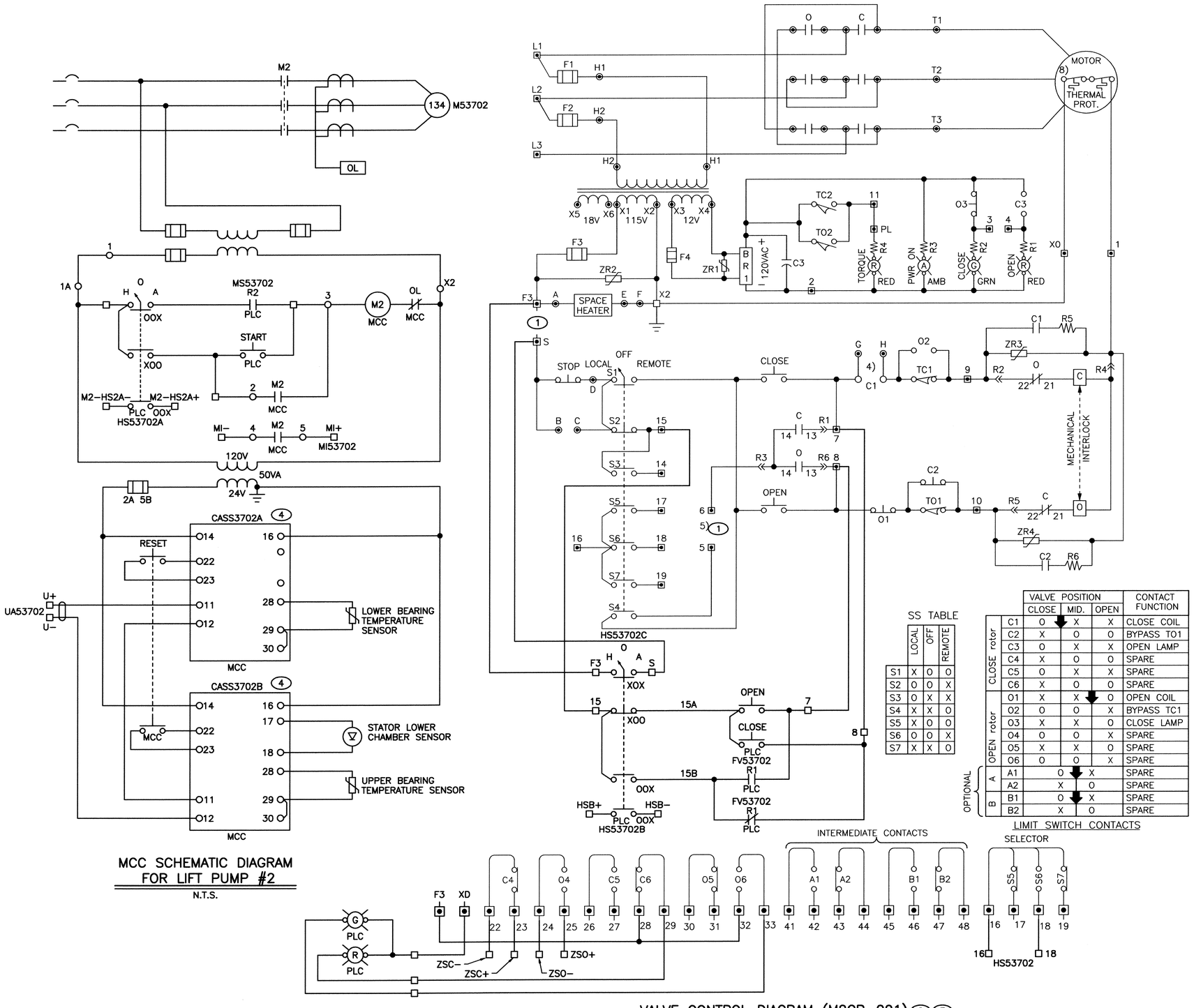

MCC SCHEMATIC DIAGRAM FOR LIFT PUMP #2

N.T.S.

VALVE CONTROL DIAGRAM (M2CP-001) (2) (3)

N.T.S.

KEYED NOTES

1. REMOVE JUMPER.
2. VALVE CONTROL SHOWN IN CLOSED POSITION WITH SELECTOR SWITCH IN LOCAL.
3. LIGHT PEN WEIGHT INDICATES COMPONENTS INTEGRAL TO VALVE OPERATOR.
4. INSTALL OFE CAS MONITORING UNITS IN MCC COMPARTMENT.

AS BUILT INFORMATION

CONTRACTOR WORK STAKED BY DATE
INSPECTOR ACCEPTANCE BY DATE
VERIFICATION BY DATE
DRAWINGS CORRECTED BY DATE
MICRO-FILM INFORMATION
RECORDED BY DATE
NO.

BENCH MARKS

SURVEY INFORMATION

FIELD NOTES

NO.	BY	DATE

ENGINEER'S SEAL

STEVEN E. SORENSON NEW MEXICO 6570 REGISTERED PROFESSIONAL ENGINEER

16 July 2002

NO.	DATE	REMARKS	BY

REVISIONS

DESIGN

DESIGNED BY WNH/HCH DATE 10-00
DRAWN BY RA DATE 10-00
CHECKED BY SES DATE 7-02

2701 MILES RD SE
ALBUQUERQUE, NM 87106
TEL: 505.242.5700
FAX: 505.242.0673

MOLZEN-CORBIN & Associates
ENGINEERS/ARCHITECTS/PLANNERS

CITY OF ALBUQUERQUE
PUBLIC WORKS DEPARTMENT
ENGINEERING DEVELOPMENT GROUP

TITLE: STORM WATER PUMP STATION #37 REHABILITATION

BELL STATION #37
LIFT PUMP #2
SCHEMATICS

Design Review Committee	City Engineer Approval	Last Design Update	Mo./Day/Yr.	Mo./Day/Yr.
APPROVED JUL 19 2002 DESIGN REVIEW COMMITTEE	APPROVED JUL 19 2002 CITY ENGINEER			

City Project No.	Zone Map No.	Sheet
4682.91	L-14	E-08 12 Of 25

© COPYRIGHT

EAB37E08.DWG 1=1 7/3/02

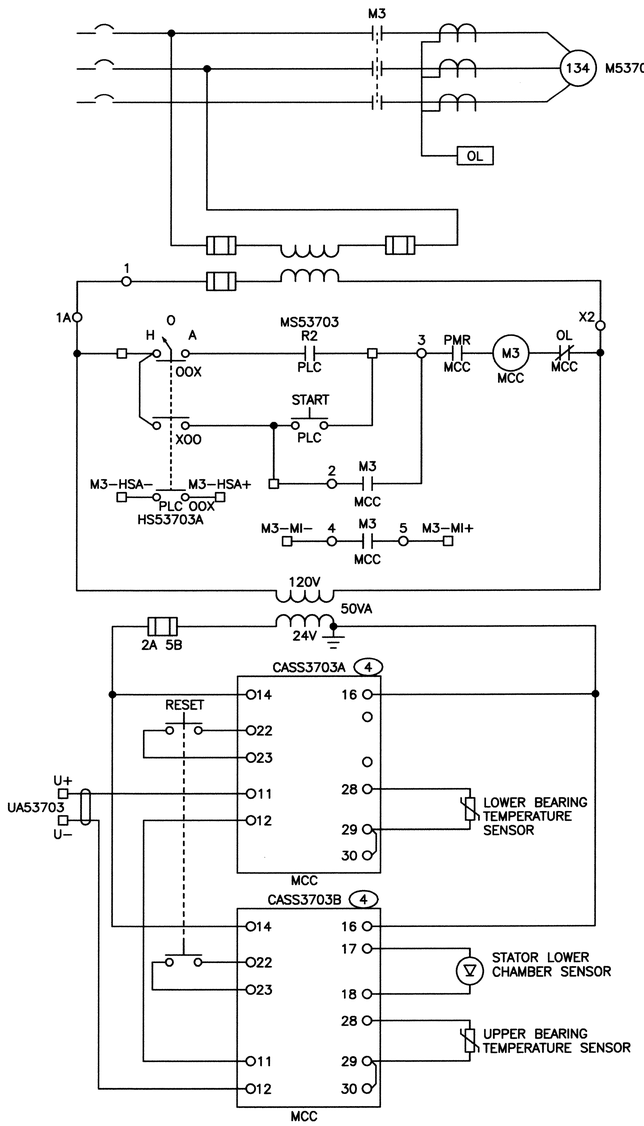

SCHEMATIC DIAGRAM FOR LIFT PUMP #3

N.T.S.

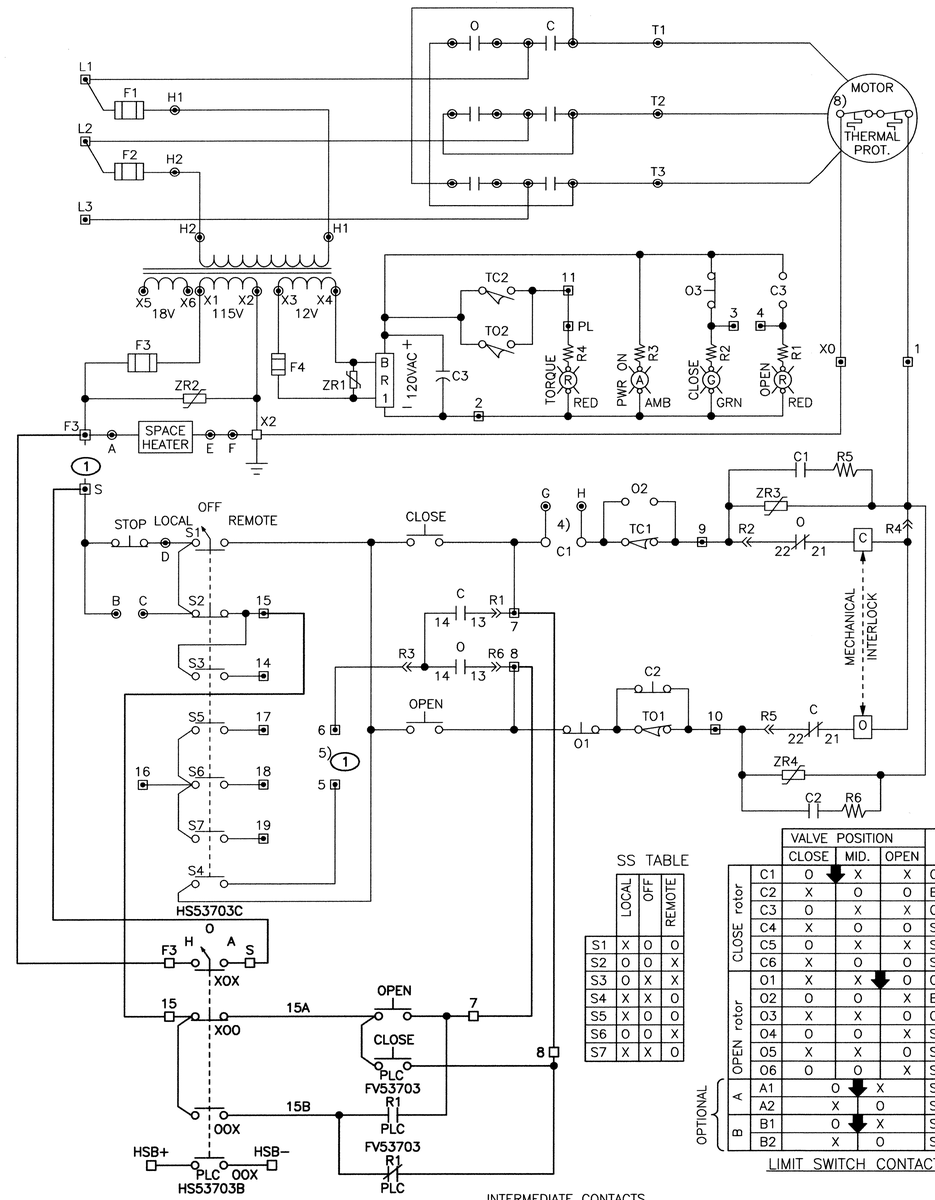

KEYED NOTES

1. REMOVE JUMPER.
2. VALVE CONTROL SHOWN IN CLOSED POSITION WITH SELECTOR SWITCH IN LOCAL.
3. LIGHT PEN WEIGHT INDICATES COMPONENTS INTEGRAL TO VALVE OPERATOR.
4. INSTALL OFE CAS MONITORING UNITS IN MCC COMPARTMENT.

SS TABLE

	LOCAL	OFF	REMOTE
S1	X	O	O
S2	O	O	X
S3	O	X	X
S4	X	X	O
S5	X	O	O
S6	O	O	X
S7	X	X	O

LIMIT SWITCH CONTACTS

			VALVE POSITION			CONTACT FUNCTION
			CLOSE	MID.	OPEN	
	CLOSE rotor	C1	O	X	X	CLOSE COIL
		C2	X	O	O	BYPASS TO1
		C3	O	X	X	OPEN LAMP
		C4	X	O	O	SPARE
		C5	O	X	X	SPARE
		C6	X	O	O	SPARE
	OPEN rotor	O1	X	X	O	OPEN COIL
		O2	O	O	X	BYPASS TC1
		O3	X	X	O	CLOSE LAMP
		O4	O	O	X	SPARE
		O5	X	X	O	SPARE
		O6	O	O	X	SPARE
OPTIONAL	A	A1	O	X		SPARE
		A2	X	O		SPARE
	B	B1	O	X		SPARE
		B2	X	O		SPARE

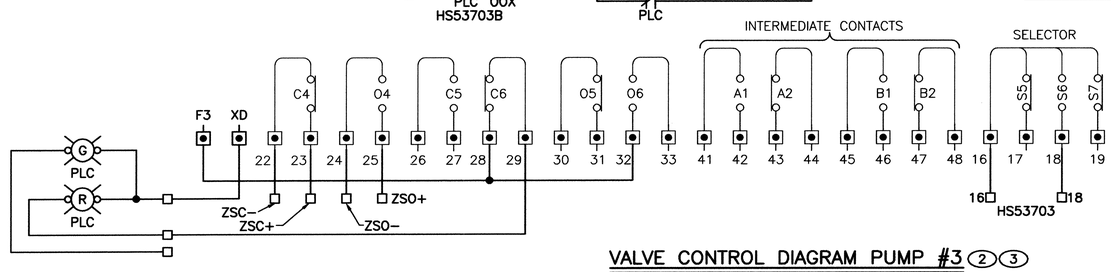

VALVE CONTROL DIAGRAM PUMP #3 (2)(3)

N.T.S.

2701 MILES RD SE
ALBUQUERQUE, NM 87106
TEL: 505.242-5700
FAX: 505.242-0673
MOLZEN-CORBIN & Associates
ENGINEERS/ARCHITECTS/PLANNERS

AS BUILT INFORMATION

CONTRACTOR WORK STARTED BY — DATE
CONTRACTOR WORK ACCEPTANCE BY — DATE
FIELD VERIFICATION BY — DATE
DRAWINGS CORRECTED BY — DATE
MICRO-FILM INFORMATION
RECORDED BY — DATE
NO.

BENCH MARKS

SURVEY INFORMATION
FIELD NOTES

NO.	BY	DATE

ENGINEER'S SEAL

NEW MEXICO STEVEN E. SORENSON 6570 REGISTERED PROFESSIONAL ENGINEER

NO.	DATE	REMARKS	BY

REVISIONS

		DATE
DESIGN		
DESIGNED BY	WNH/HCH	DATE 10-00
DRAWN BY	RA	DATE 10-00
CHECKED BY	SES	DATE 7-02

CITY OF ALBUQUERQUE
PUBLIC WORKS DEPARTMENT
ENGINEERING DEVELOPMENT GROUP

TITLE: STORM WATER PUMP STATION #37 REHABILITATION

BELL STATION #37
LIFT PUMP #3
SCHEMATICS

Design Review Committee: APPROVED JUL 19 2002 DESIGN REVIEW COMMITTEE

City Engineer Approval: APPROVED JUL 19 2002 CITY ENGINEER

Last Design Update | Mo./Day/Yr. | Mo./Day/Yr.

City Project No.	Zone Map No.	Sheet
4682.91	L-14	E-09

13 Of 25

© COPYRIGHT

EAB37E09.DWG 1=1 7/3/02

KEYED NOTES

1. MODIFY SUMP PUMP CONTROL CIRCUITRY AS SHOWN TO PROVIDE PLC CONTROL AND MONITORING OF EQUIPMENT OPERATIONS.
2. REUSE EXISTING TERMINAL BOARD POINTS. RE-LABEL AS INDICATED.
3. CUT SHIELD 1/2" SHORTER THAN PAIRED CABLE. INSULATE SHIELD WITH HEAT SHRINK TUBING.
4. REMOVE SUMP PUMP CONTROL FLOATS. STORE AS DIRECTED BY OWNER REPRESENTATIVE. IF SERVICEABLE, REUSE CONDUIT INSTALLED FROM SUMP PUMP CONTROL PANEL TO WET WELL. IF EXISTING CONDUIT IS DAMAGED OR OTHERWISE NOT SERVICEABLE, REPLACE.
5. SINGLE PAIR TWSH FROM PLC TO SUMP PUMP CONTROL PANEL.
6. PROVIDE AND INSTALL CONTACT BLOCK FOR EXISTING HOA SWITCH.

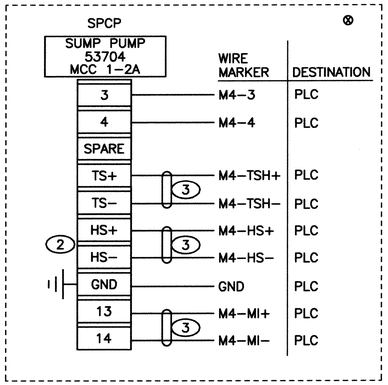

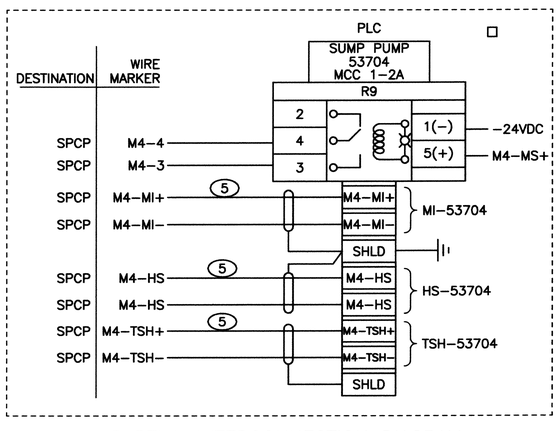

PARTIAL INTERCONNECTION DIAGRAM

CONTROL DIAGRAM

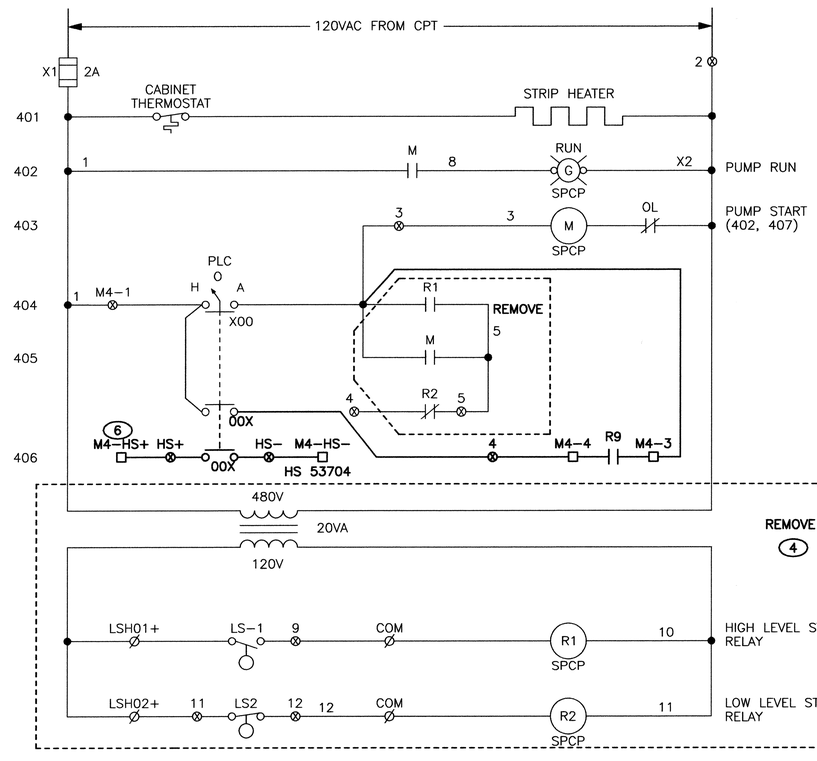

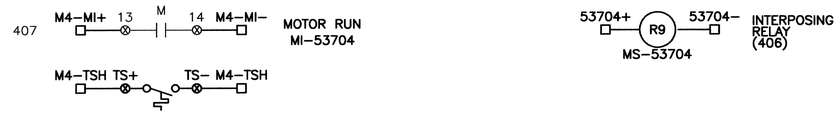

EXISTING SUMP PUMP CONTROL PANEL SCHEMATIC DIAGRAM (1)

N.T.S.

AS BUILT INFORMATION

CONTRACTOR: WORK STARTED BY DATE
WORK COMPLETED DATE
ACCEPTANCE BY DATE
FIELD VERIFICATION BY DATE
DRAWINGS CORRECTED BY DATE
MICRO-FILM INFORMATION
RECORDED BY DATE
NO.

BENCH MARKS

SURVEY INFORMATION

FIELD NOTES

NO.	BY	DATE

ENGINEER'S SEAL

STEVEN E. SORENSON NEW MEXICO 6370 REGISTERED PROFESSIONAL ENGINEER 16 July 2002

NO.	DATE	REMARKS	BY

REVISIONS

DESIGN

DESIGNED BY	WNH	DATE 10-00
DRAWN BY	RA	DATE 10-00
CHECKED BY	SES	DATE 7-02

2701 MILES RD SE
ALBUQUERQUE, NM 87106
TEL: 505.242-5700
FAX: 505.242-0673
MOLZEN-CORBIN & Associates
ENGINEERS/ARCHITECTS/PLANNERS

CITY OF ALBUQUERQUE
PUBLIC WORKS DEPARTMENT
ENGINEERING DEVELOPMENT GROUP

TITLE: STORM WATER PUMP STATION #37 REHABILITATION

BELL STATION #37
SUMP PUMP
CONTROL SCHEMATIC

Design Review Committee	City Engineer Approval	Last Design Update	Mo./Day/Yr.	Mo./Day/Yr.
APPROVED JUL 19 2002 DESIGN REVIEW COMMITTEE	APPROVED JUL 19 2002 CITY ENGINEER			

City Project No.	Zone Map No.	Sheet
4682.91	L-14	E-10

Sheet 14 Of 25

© COPYRIGHT

E4837E10.DWG 1=1 7/3/02

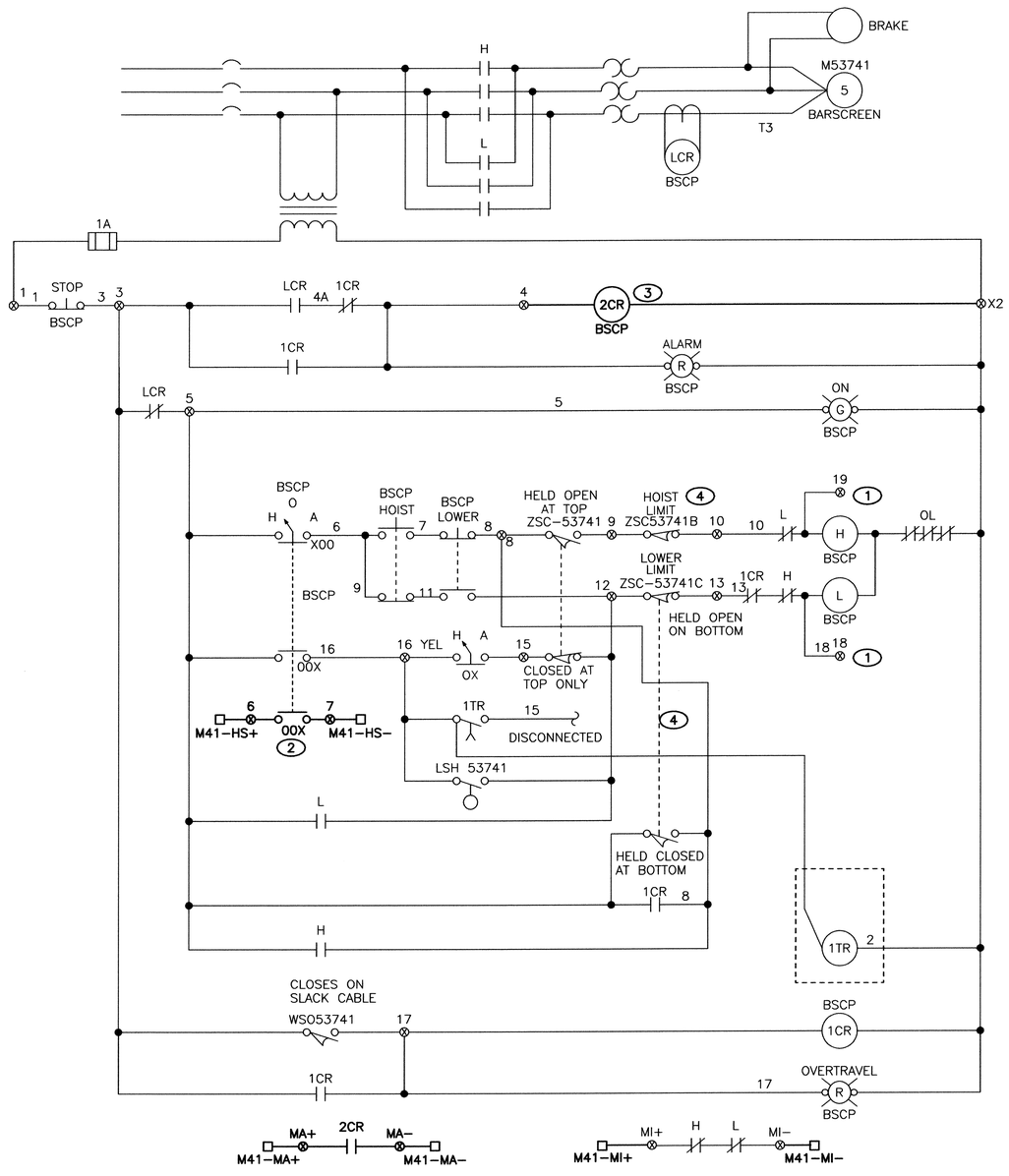

BAR SCREEN SCHEMATIC DIAGRAM

N.T.S.

KEYED NOTES

1. REMOVE CONDUCTORS TO EXISTING CONTROLLER.
2. PROVIDE AND INSTALL CONTACT BLOCK FOR EXISTING HOA SWITCH.
3. INSTALL RELAY IN EXISTING CONTROL PANEL. CONNECT FOR ALARM TO PLC.
4. ADJUST SWITCHES FOR PROPER OPERATION.
5. 3 PAIR TWSH.
6. CUT SHIELD 1/2" SHORTER THAN THE STRIPPED CABLE PAIRS. INSTALL HEAT SHRINK TUBING TO INSULATE THE SHIELD.

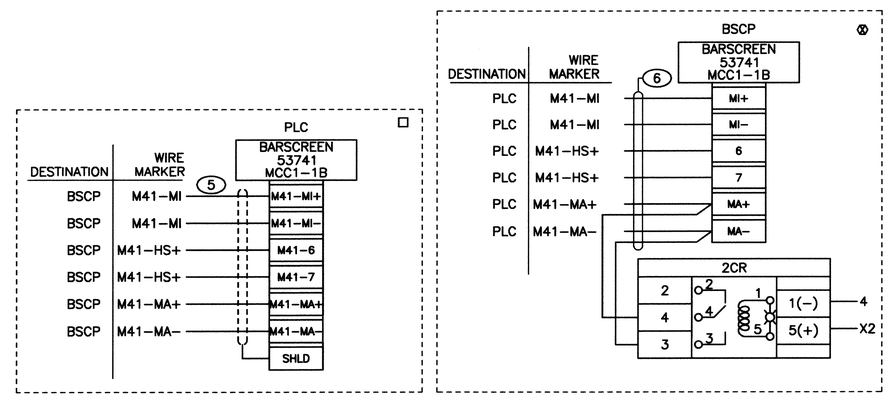

PARTIAL INTERCONNECTION DIAGRAM

2701 MILES RD SE
ALBUQUERQUE, NM 87106
TEL: 505.242-5700
FAX: 505.242-0673
MOLZEN-CORBIN & Associates
ENGINEERS/ARCHITECTS/PLANNERS

AS BUILT INFORMATION

CONTRACTOR WORK STAKED BY DATE
INSPECTOR'S ACCEPTANCE BY DATE
FIELD VERIFICATION BY DATE
DRAWINGS CORRECTED BY DATE
MICRO-FILM INFORMATION
RECORDED BY DATE
NO.

BENCH MARKS

SURVEY INFORMATION
FIELD NOTES

NO.	BY	DATE

ENGINEER'S SEAL

STEVEN E. SORENSON
NEW MEXICO
6570
REGISTERED PROFESSIONAL ENGINEER
16 July 2002

NO.	DATE	REMARKS	BY

REVISIONS

DESIGN

DESIGNED BY	WNH	DATE 10-00
DRAWN BY	RA	DATE 10-00
CHECKED BY	SES	DATE 7-02

CITY OF ALBUQUERQUE
PUBLIC WORKS DEPARTMENT
ENGINEERING DEVELOPMENT GROUP

TITLE: STORM WATER PUMP STATION #37 REHABILITATION

BELL STATION #37
BARSCREEN
DIAGRAMS

Design Review Committee: APPROVED JUL 19 2002 DESIGN REVIEW COMMITTEE

City Engineer Approval: APPROVED JUL 19 2002 CITY ENGINEER

Last Design Update | Mo./Day/Yr. | Mo./Day/Yr.

City Project No.	Zone Map No.	Sheet
4682.91	L-14	E-11 15 Of 25

© COPYRIGHT

EAB37E11.DWG 1=1 7/3/02

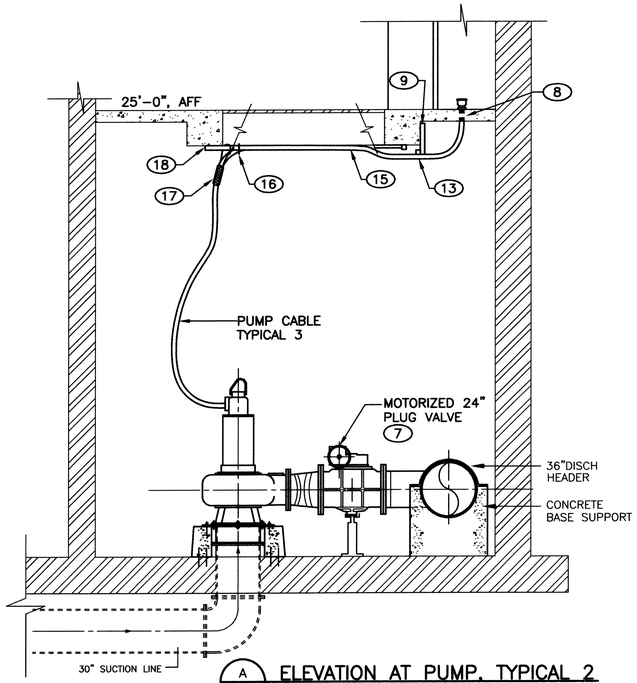

A / E-05 ELEVATION AT PUMP, TYPICAL 2
SCALE: 1/4" = 1'-0"

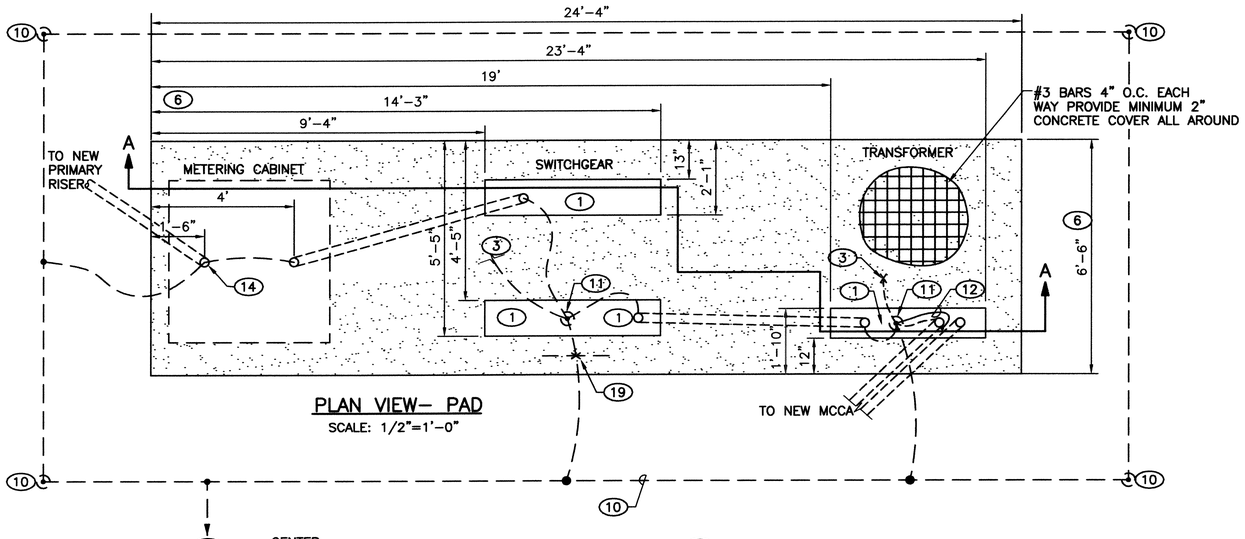

PLAN VIEW- PAD
SCALE: 1/2"=1'-0"

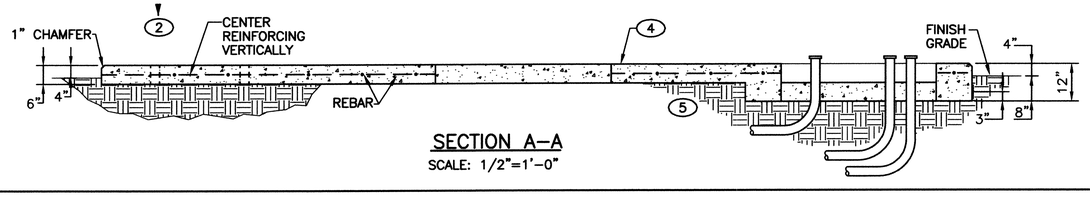

SECTION A-A
SCALE: 1/2"=1'-0"

KEYED NOTES

1. NO CONCRETE IN TROUGH AREA.
2. TO PLC.
3. CONNECT TO EQUIPMENT GROUND BAR WITH #4/0, TYPICAL.
4. 3000 PSI CONCRETE. LEVEL WITHIN +/- 1/4 INCH IN FIVE FEET. TROWEL FINISH TO PROVIDE A TRUE PLANE WITHIN 1/16 INCH IN FIVE FEET AS DETERMINED BY A FIVE FOOT STRAIGHTEDGE.
5. COMPACT EXISTING SOIL AND ENGINEERED FILL TO MINIMUM 95% MODIFIED PROCTOR.
6. DIMENSIONS SHOWN ARE TYPICAL. ADJUST DIMENSIONS TO ACCOMMODATE EQUIPMENT FURNISHED. MAINTAIN MINIMUM THREE FEET CLEARANCE ON EACH SIDE OF SWITCHGEAR. MAINTAIN MANUFACTURER RECOMMENDED CLEARANCE AROUND TRANSFORMER. MAINTAIN CLEARANCE AROUND PRIMARY METERING ENCLOSURE AS REQUIRED BY PNM STANDARDS.
7. ILLUSTRATIVE. SEE DRAWING C-03 FOR ACTUAL ORIENTATION.
8. CORE DRILL FLOOR AT STARTER FOR PUMP 2 AND FOR PUMP 3, TOTAL OF SIX PENETRATIONS. INSTALL CONDUITS. INSTALL BUSHINGS AND BONDS AS SPECIFIED. SEAL AROUND CONDUITS WITH SILICONE SEAL. SEE E-05 FOR PUMP 1 CONDUIT.
9. THREE VERTICAL STRUT, EACH ANCHORED WITH 1/2" DIAMETER DRILLED IN EPOXY-SET ANCHOR. ONE HORIZONTAL STRUT BOLTED TO VERTICAL STRUTS.
10. CONSTRUCT GROUND GRID OF #4/0 BARE COPPER AND 5/8 INCH BY 12 FOOT GROUND RODS 3 FEET OUTSIDE THE PERIMETER OF THE PAD. BURY #4/0 AT THREE FEET BELOW GRADE. RISE UP AT RODS TO CONNECT INSIDE GROUND WELL. PROVIDE GROUND WELLS AND MARKINGS AS SPECIFIED.
11. 5/8 INCH BY 12 FOOT GROUND RODS FOR SWITCHGEAR AND TRANSFORMER. CONNECT TO GROUND GRID WITH #4/0.
12. CONNECT DUCT BANK GROUND TO GROUND ROD.
13. EXTEND STRUT DOWN TO ACCOMMODATE BENDING RADIUS OF CONDUIT.
14. BOND TO METAL CONDUITS, TYPICAL.
15. OFFSET VERTICALLY UP SO CONDUITS ARE SUPPORTED RIGHT AT BOTTOM OF BEAM. OFFSET HORIZONTALLY TOWARD CENTERLINE OF PUMP FOR EASY ACCESS TO CABLES FOR FUTURE MAINTENANCE. CONTROL HORIZONTAL OFFSET SO CONDUITS DO NOT INTERFERE WITH REMOVAL/REPLACEMENT OF PUMP.
16. INSULATED THROAT BUSHING, TYPICAL.
17. CABLE GRIP ON EACH CABLE. KELLEMS STANDARD DUTY, SINGLE OFFSET EYE, SINGLE WEAVE, TIN-COATED BRONZE, SPLIT MESH, ROD CLOSING.
18. TWO STRUT IN NORTH-SOUTH DIRECTION. THREE STRUT IN EAST-WEST DIRECTION. CANTILEVER EW STRUT FOR SUPPORT OF CONDUIT TOWARD PUMP CENTERLINE.
19. BRAZE GROUNDING CONDUCTOR TO REINFORCING ROD.

AS BUILT INFORMATION
CONTRACTOR WORK STARTED BY DATE
INSPECTOR'S ACCEPTANCE BY DATE
FIELD VERIFICATION BY DATE
DRAWINGS CORRECTED BY DATE
MICRO-FILM INFORMATION
RECORDED BY DATE
NO.

BENCH MARKS

SURVEY INFORMATION
FIELD NOTES

NO.	BY	DATE

ENGINEER'S SEAL
STEVEN E. SORENSON
NEW MEXICO 6570
REGISTERED PROFESSIONAL ENGINEER
15 July 2002

NO.	DATE	REMARKS	BY
		REVISIONS	

DESIGNED BY	WNH/HCH	DATE 10-00
DRAWN BY	RA	DATE 10-00
CHECKED BY	SES	DATE 7-02

2701 MILES RD SE
ALBUQUERQUE, NM 87106
TEL: 505.242-5700
FAX: 505.242-0673
MOLZEN-CORBIN & Associates
ENGINEERS/ARCHITECTS/PLANNERS

CITY OF ALBUQUERQUE
PUBLIC WORKS DEPARTMENT
ENGINEERING DEVELOPMENT GROUP

TITLE: STORM WATER PUMP STATION #37 REHABILITATION
BELL STATION #37
ELECTRICAL
DETAILS

0 4' 8'
1/4"=1'-0"
GRAPHIC SCALE

0 2' 4'
1/2"=1'-0"
GRAPHIC SCALE

© COPYRIGHT

Design Review Committee	City Engineer Approval	Last Design Update	Mo./Day/Yr.	Mo./Day/Yr.
APPROVED JUL 19 2002 DESIGN REVIEW COMMITTEE	APPROVED JUL 19 2002 CITY ENGINEER			

City Project No.	Zone Map No.	Sheet
4682.91	L-14	E-12

16 Of 25

EAB37E12.DWG 1=24 7/3/02

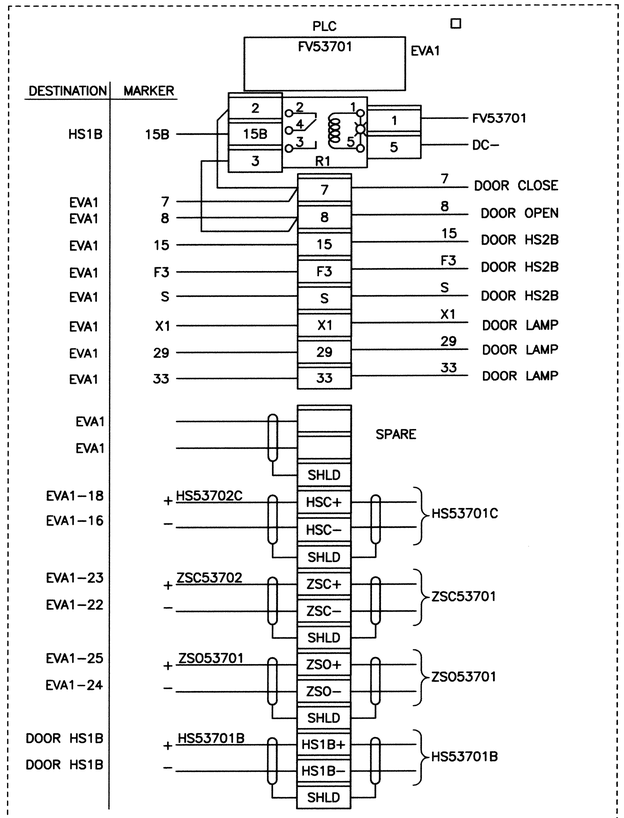

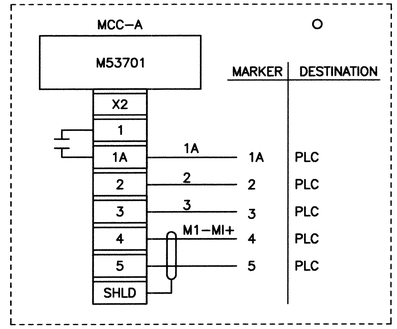

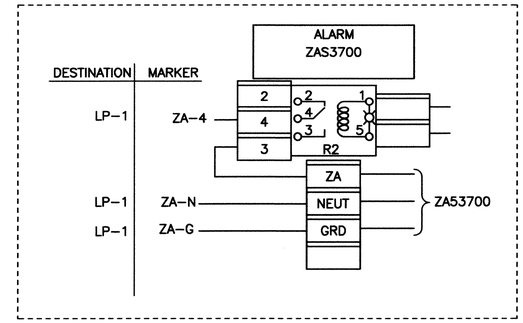

INTERCONNECTION DIAGRAM FOR ALARM

N.T.S.

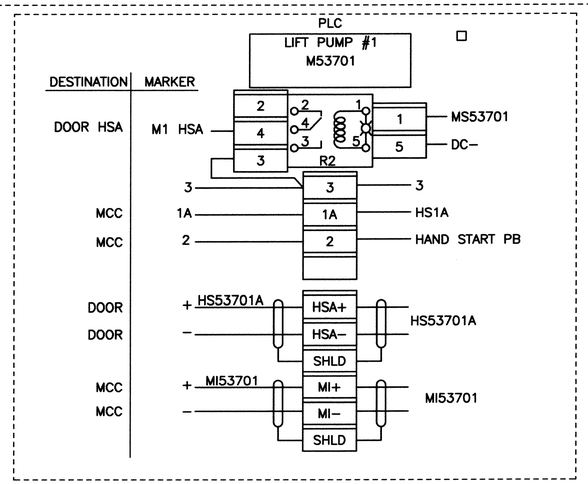

INTERCONNECTION DIAGRAM FOR LIFT PUMP #1

N.T.S.

2701 MILES RD SE
ALBUQUERQUE, NM 87106
TEL: 505.242-5700
FAX: 505.242-0673
MOLZEN-CORBIN & Associates
ENGINEERS/ARCHITECTS/PLANNERS

AS BUILT INFORMATION

CONTRACTOR: DATE
WORK STAKED BY: DATE
INSPECTOR'S ACCEPTANCE BY: DATE
FIELD VERIFICATION BY: DATE
DRAWINGS CORRECTED BY: DATE

MICRO-FILM INFORMATION

RECORDED BY: DATE
NO.

BENCH MARKS

SURVEY INFORMATION

FIELD NOTES

NO.	BY	DATE

ENGINEER'S SEAL

STEVEN E. SORENSON NEW MEXICO 6570 REGISTERED PROFESSIONAL ENGINEER

16 July 2002

REVISIONS

NO.	DATE	REMARKS	BY

DESIGN

DESIGNED BY	WNH	DATE 10-00
DRAWN BY	RA	DATE 10-00
CHECKED BY	SES	DATE 7-02

CITY OF ALBUQUERQUE
PUBLIC WORKS DEPARTMENT
ENGINEERING DEVELOPMENT GROUP

TITLE: STORM WATER PUMP STATION #37 REHABILITATION

BELL STATION #37

LIFT PUMP #1

CONNECTIONS DIAGRAMS AND ALARM

Design Review Committee: APPROVED JUL 19 2002 DESIGN REVIEW COMMITTEE

City Engineer Approval: APPROVED JUL 19 2002 CITY ENGINEER

Last Design Update | Mo./Day/Yr. | Mo./Day/Yr.

City Project No.	Zone Map No.	Sheet
4682.91	L-14	E-13

17 Of 25

© COPYRIGHT

EA837E13.DWG 1=1 7/3/02

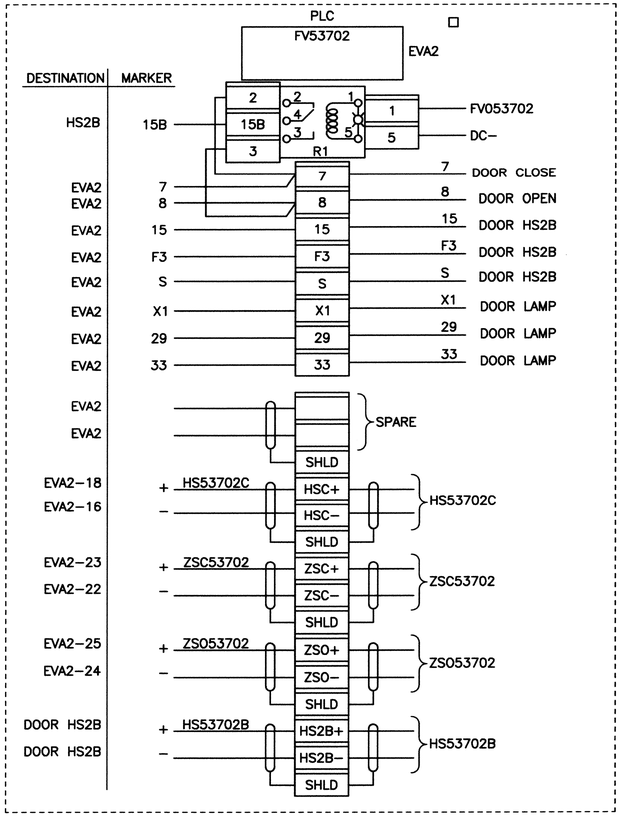

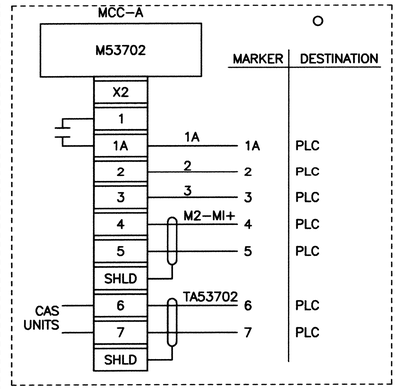

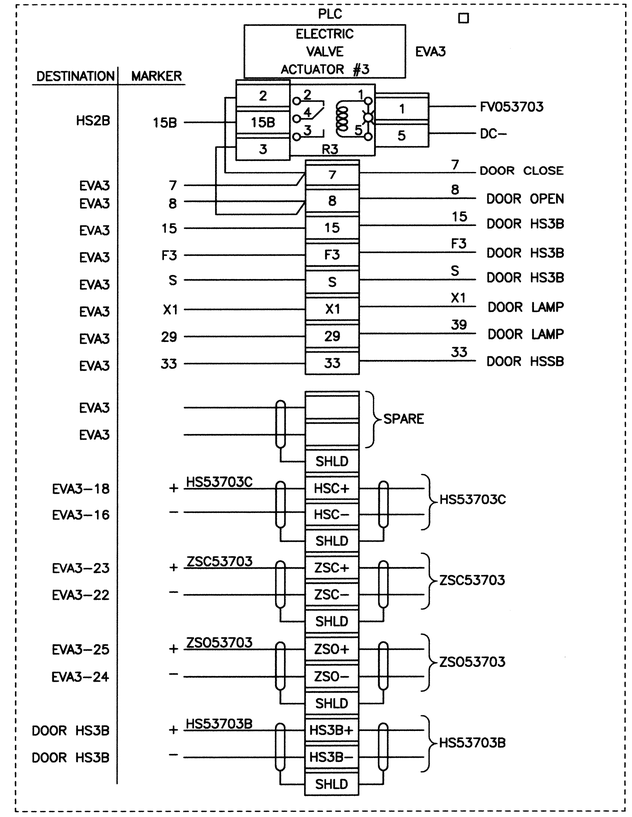

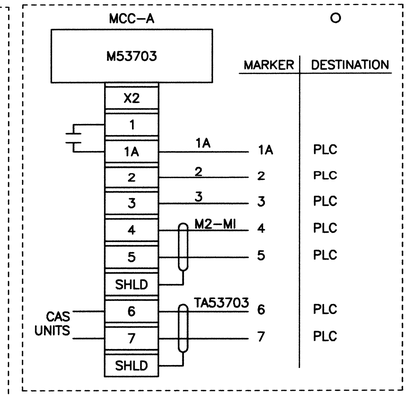

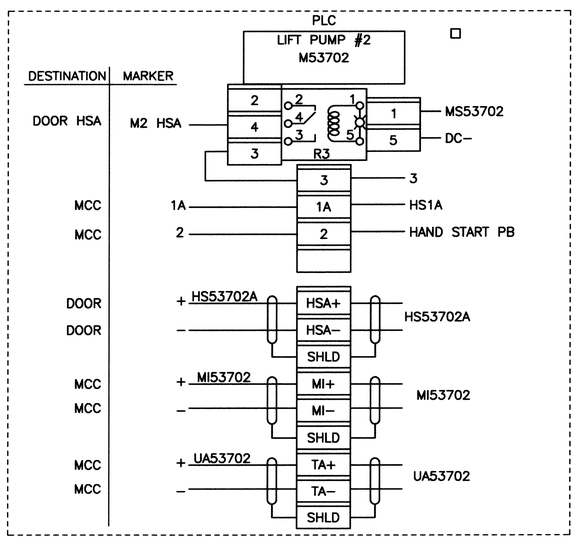

INTERCONNECTION DIAGRAM FOR LIFT PUMP #2

N.T.S.

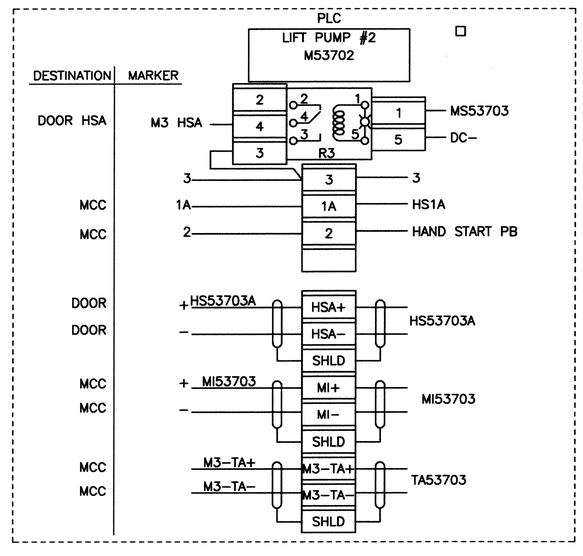

INTERCONNECTION DIAGRAM FOR LIFT PUMP #3

N.T.S.

© COPYRIGHT

AS BUILT INFORMATION

CONTRACTOR WORK STAKED BY — DATE
INSPECTOR'S ACCEPTANCE BY — DATE
FIELD VERIFICATION BY — DATE
DRAWINGS CORRECTED BY — DATE
MICRO-FILM INFORMATION
RECORDED BY — DATE
NO.

BENCH MARKS

SURVEY INFORMATION
FIELD NOTES

NO.	BY	DATE

ENGINEER'S SEAL

STEVEN E. SORENSON
NEW MEXICO
6570
REGISTERED PROFESSIONAL ENGINEER

16 July 2002

NO.	DATE	REMARKS	BY

REVISIONS

DESIGN

DESIGNED BY	WNH/HCH	DATE 10-00
DRAWN BY	RA	DATE 10-00
CHECKED BY	SES	DATE 7-02

2701 MILES RD SE
ALBUQUERQUE, NM 87106
TEL: 505.242-5700
FAX: 505.242-0673

MOLZEN-CORBIN & Associates
ENGINEERS/ARCHITECTS/PLANNERS

CITY OF ALBUQUERQUE
PUBLIC WORKS DEPARTMENT
ENGINEERING DEVELOPMENT GROUP

TITLE: STORM WATER PUMP STATION #37 REHABILITATION

BELL STATION #37
LIFT PUMP #2 AND #3
CONNECTION DIAGRAMS

Design Review Committee: APPROVED JUL 19 2002 DESIGN REVIEW COMMITTEE

City Engineer Approval: APPROVED JUL 19 2002 CITY ENGINEER

Last Design Update — Mo./Day/Yr. — Mo./Day/Yr.

City Project No. 4682.91 | Zone Map No. L-14 | Sheet E-14 | 18 Of 25

EAB37E14.DWG 1=1 7/3/02

EQUIPMENT

- CONE ROOF TANK
- FLOATING ROOF TANK
- STIRRED TANK
- HEATED AND STIRRED TANK
- BIN
- PRESSURIZED SPHERICAL VESSEL
- HORIZONTAL DRUM VESSEL
- VERTICAL DRUM VESSEL
- TOWER
- PACKED TOWER
- TRAYED TOWER
- THICKENER TANK

EQUIPMENT

- CENTRIFUGAL PUMP
- ROTARY PUMP
- MOTOR
- TURBINE
- COMPRESSOR
- EJECTOR
- CYCLONE
- LIQUID FILTER
- DRUM FILTER
- STATIC MIXER
- EXCHANGER
- SHELL AND TUBE EXCHANGER
- DOUBLE PIPE EXCHANGER
- AIR EXCHANGER
- VESSEL INSULATION
- FLOW NOZZLE
- MANHOLE
- THERMOWELL
- REDUCER

VALVES

- NORMALLY OPEN ANGLE VALVE SOLID – NORMALLY CLOSED
- 3 – WAY VALVE SOLID – CLOSED PORT
- 4 – WAY VALVE
- 4" NORMALLY OPEN BALL VALVE SOLID – NORMALLY CLOSED 4" – VALVE SIZE
- 2" NORMALLY OPEN BLEED VALVE SOLID – NORMALLY CLOSED 2" – VALVE SIZE
- 10" NORMALLY OPEN BUTTERFLY VALVE SOLID – NORMALLY CLOSED 10" – VALVE SIZE
- 8" CHECK VALVE 8" – VALVE SIZE
- 2" NORMALLY OPEN COCK VALVE SOLID – NORMALLY CLOSED 2" – VALVE SIZE
- 4" NORMALLY OPEN DIAPHRAGM VALVE SOLID – NORMALLY CLOSED 4" – VALVE SIZE
- 8" NORMALLY OPEN GATE VALVE SOLID – NORMALLY CLOSED 8" – VALVE SIZE
- 4" NORMALLY OPEN GLOBE VALVE SOLID – NORMALLY CLOSED 4" – VALVE SIZE
- 2" NORMALLY OPEN HAND VALVE SOLID – NORMALLY CLOSED 2" – VALVE SIZE
- 2" NORMALLY OPEN NEEDLE VALVE SOLID – NORMALLY CLOSED 2" – VALVE SIZE
- 2" NORMALLY OPEN PINCH VALVE SOLID – NORMALLY CLOSED 2" – VALVE SIZE
- 6" NORMALLY OPEN PLUG VALVE SOLID – NORMALLY CLOSED 6" – VALVE SIZE
- 4" NORMALLY OPEN STRAHMAN VALVE SOLID – NORMALLY CLOSED 4" – VALVE SIZE
- 8" NORMALLY OPEN UNCLASSIFIED VALVE SOLID – NORMALLY CLOSED 8" – VALVE SIZE
- ISOLATION VALVE

P & ID INSTRUMENTATION

- ORIFICE PLATE
- FE 70102 ROTAMETER FE – FUNCTIONAL IDENTIFICATION 70102 – LOOP NUMBER
- VENTURI TUBE
- FLUME
- WEIR
- TURBINE FLOW METER

P & ID INSTRUMENTATION

- FLOW STRAIGHTENING VANE
- DIAPHRAGM SEAL
- BLIND FLANGE
- AVERAGING PITOT TUBE
- HANDWHEEL
- DIAPHRAGM ACTUATOR, SPRING OPPOSED
- S DIAPHRAGM ACTUATOR, SPRING OPPOSED, WITH POSITIONER
- DIAPHRAGM ACTUATOR, PRESSURE BALANCED
- M MOTORIZED ACTUATOR
- CYLINDER ACTUATOR
- E/H ELECTROHYDRAULIC ACTUATOR
- S SOLENOID ACTUATOR
- PRESSURE RELIEF
- PRESSURE REDUCING REGULATOR
- BACKPRESSURE REGULATOR
- RELIEF ARROW
- PRESSURE AND VACUUM RELIEF ARROW
- MAGNETIC CLUTCH
- C OUTPUT FROM COMPUTER CONTROL SYSTEM
- C INPUT TO COMPUTER CONTROL SYSTEM

LINE LEGEND

- PROCESS LINE
- INSULATED PROCESS LINE
- INSULATED AND HEAT TRACED PROCESS LINE
- ELECTRIC SIGNAL LINE
- SOFTWARE LINE
- ELECTROMAGNETIC SIGNAL LINE
- ELECTRIC BINARY SIGNAL LINE

PANEL LEGEND

VFD –	VARIABLE FREQUENCY DRIVE
OIU –	OPERATOR INTERFACE (PLC DOOR)
SC –	SPEED CONTROL
F –	FIELD

FUNCTION SYMBOLS

	FIELD DEVICE	OPERATOR INTERFACE UNIT: CONTROLS	OPERATOR INTERFACE UNIT: INDICATOR LIGHT	COMPUTER FUNCTION
FIELD MOUNTED				
PLC CABINET MOUNTED/ ACCESSIBLE TO OPERATOR				
INACCESSIBLE TO OPERATOR/ INDICATION ONLY				
REMOTE PANEL CONTROLLER MOUNTED				

FUNCTIONAL IDENTIFICATION

	FIRST–LETTER: MEASURED OR INITIATING VARIABLE	FIRST–LETTER: MODIFIER	SUCCEEDING–LETTERS: READOUT OR PASSIVE FUNCTION	SUCCEEDING–LETTERS: OUTPUT FUNCTION	SUCCEEDING–LETTERS: MODIFIER
A	ANALYSIS		ALARM		
B	BURNER, COMBUSTION		USER'S CHOICE	USER'S CHOICE	BACKWARD
C	USER'S CHOICE			CONTROL	
D	USER'S CHOICE	DIFFERENTIAL			
E	VOLTAGE		SENSOR (ELEMENT)		
F	FLOW RATE	RATIO (FRACTION)			FORWARD
G	USER'S CHOICE		GLASS, VIEWING DEVICE		
H	HAND				HIGH
I	CURRENT (ELEC)		INDICATE		
J	POWER	SCAN			
K	TIME,TIME SCHEDULE	TIME RATE OF CHANGE		CONTROL STATION	
L	LEVEL		LIGHT		LOW
M	MOTOR	MOMENTARY			MIDDLE, INTERMEDIATE
N	INDICATOR		USER'S CHOICE	USER'S CHOICE	USER'S CHOICE
O	USER'S CHOICE		ORIFICE, RESTRICTION		
P	PRESSURE, VACUUM		POINT (TEST) CONNECTION		
Q	QUANTITY	INTEGRATE, TOTALIZE			
R	RADIATION		RECORD		RUN
S	SPEED, FREQUENCY	SAFETY		SWITCH	STOP
T	TEMPERATURE			TRANSMIT	
U	MULTIVARIABLE		MULTIFUNCTION	MULTIFUNCTION	MULTIFUNCTION
V	VIBRATION, MECHANICAL ANALYSIS			VALVE, DAMPER, LOUVER	
W	WEIGHT, FORCE		WELL		
X	UNCLASSIFIED	X AXIS		POLARIZER	
Y	EVENT, STATE OR PRESENCE	Y AXIS		RELAY, COMPUTE, CONVERT	
Z	POSITION, DIMENSION	Z AXIS		DRIVER, ACTUATOR, UNCLASSIFIED FINAL CONTROL ELEMENT	

NOTE: NOT ALL SYMBOLS ARE USED ON PLANS.

PACKAGE LEGEND

* –	PACKAGE SYSTEM
** –	ELECTRICAL SPECIFICATION
*** –	EXISTING

INSTRU. ID EXAMPLE SYMBOL

PWR HS 53701A LOC

- PWR – POWER SUPPLY
- FUN – FUNCTION
- PKG – PACKAGE LEGEND
- PANEL LEGEND

MSS 53701B

- FIRST LETTER
- SUCCEEDING LETTER
- TAG NUMBER

© COPYRIGHT

2701 MILES RD SE
ALBUQUERQUE, NM 87106
TEL: 505.242-5700
FAX: 505.242-0673
MOLZEN-CORBIN & Associates
ENGINEERS/ARCHITECTS/PLANNERS

AS BUILT INFORMATION
CONTRACTOR / WORK STAKED BY / INSPECTOR'S ACCEPTANCE BY / FIELD VERIFICATION BY / DRAWINGS CORRECTED BY — DATE
MICRO-FILM INFORMATION
RECORDED BY — DATE
NO.

BENCH MARKS

SURVEY INFORMATION
FIELD NOTES
NO. | BY | DATE

SEAL
ENGINEER'S SEAL
STEVEN E. SORENSON NEW MEXICO 6570 REGISTERED PROFESSIONAL ENGINEER
16 July 2002

NO.	DATE	REMARKS	BY
		REVISIONS	

DESIGN

		DATE
DESIGNED BY	WNH	10-00
DRAWN BY	RA	10-00
CHECKED BY	SES	7-02

CITY OF ALBUQUERQUE
PUBLIC WORKS DEPARTMENT
ENGINEERING DEVELOPMENT GROUP

TITLE: STORM WATER PUMP STATION #37 REHABILITATION
BELL STATION #37
INSTRUMENTATION
LEGEND

Design Review Committee: APPROVED JUL 19 2002 DESIGN REVIEW COMMITTEE
City Engineer Approval: APPROVED JUL 19 2002 CITY ENGINEER
Last Design Update | Mo./Day/Yr. | Mo./Day/Yr.

City Project No.	Zone Map No.	Sheet	
4682.91	L–14	I–01	19 Of 25

EAB3701.DWG 1=1 7/3/02

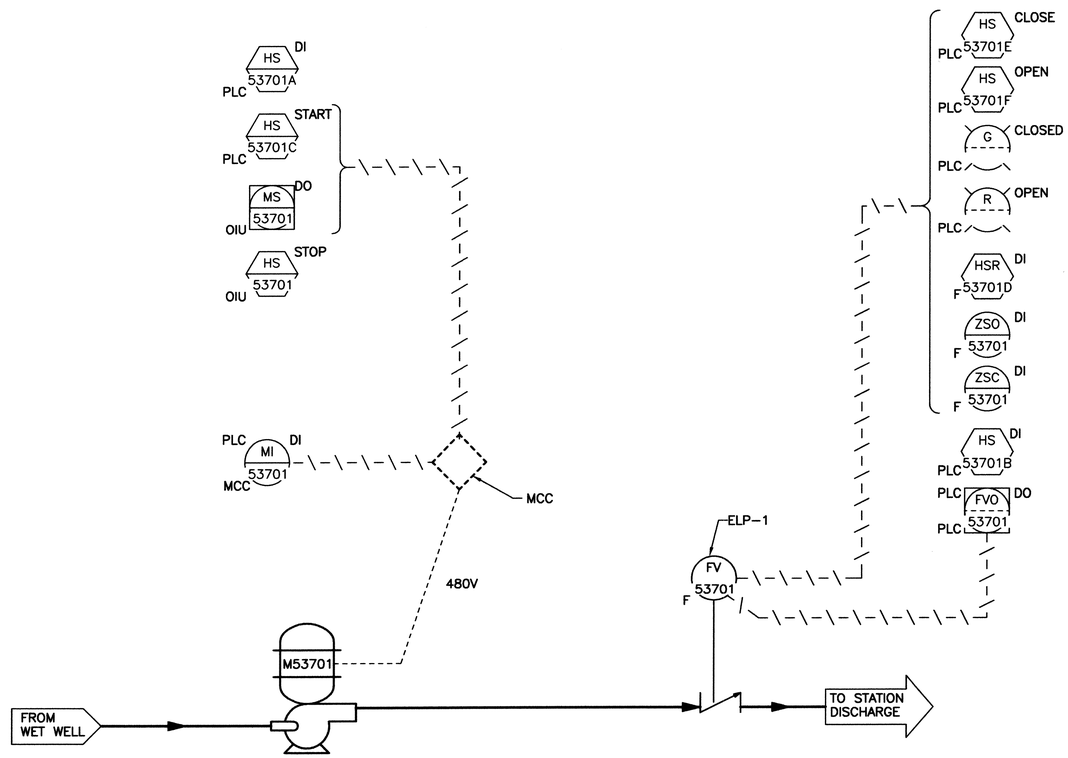

PUMP #1 PID DIAGRAM

N.T.S.

© COPYRIGHT

AS BUILT INFORMATION

CONTRACTOR
WORK STARTED BY — DATE
WORK COMPLETED — DATE
ACCEPTANCE BY — DATE
FIELD VERIFICATION BY — DATE
DRAWINGS CORRECTED BY — DATE

MICRO-FILM INFORMATION

RECORDED BY — DATE
NO.

BENCH MARKS

SURVEY INFORMATION

FIELD NOTES

NO.	BY	DATE

ENGINEER'S SEAL

STEVEN E. SORENSON — NEW MEXICO — 6570 — REGISTERED PROFESSIONAL ENGINEER

16 July 2002

REVISIONS

NO.	DATE	REMARKS	BY

DESIGN

		DATE
DESIGNED BY	WNH	10-00
DRAWN BY	RA	10-00
CHECKED BY	SES	7-02

2701 MILES RD SE
ALBUQUERQUE, NM 87106
TEL: 505.242-5700
FAX: 505.242-0673

MOLZEN-CORBIN & Associates
ENGINEERS/ARCHITECTS/PLANNERS

CITY OF ALBUQUERQUE
PUBLIC WORKS DEPARTMENT
ENGINEERING DEVELOPMENT GROUP

TITLE: STORM WATER PUMP STATION #37 REHABILITATION

BELL STATION #37
ELECTRICAL P & ID
DIAGRAM, SHEET 1

Design Review Committee	City Engineer Approval	Last Design Update	Mo./Day/Yr.	Mo./Day/Yr.
APPROVED JUL 19 2002 DESIGN REVIEW COMMITTEE	APPROVED JUL 19 2002 CITY ENGINEER			

City Project No.	Zone Map No.	Sheet
4682.91	L-14	I-02

20 Of 25

EAB3/02 1=1 7/03/02

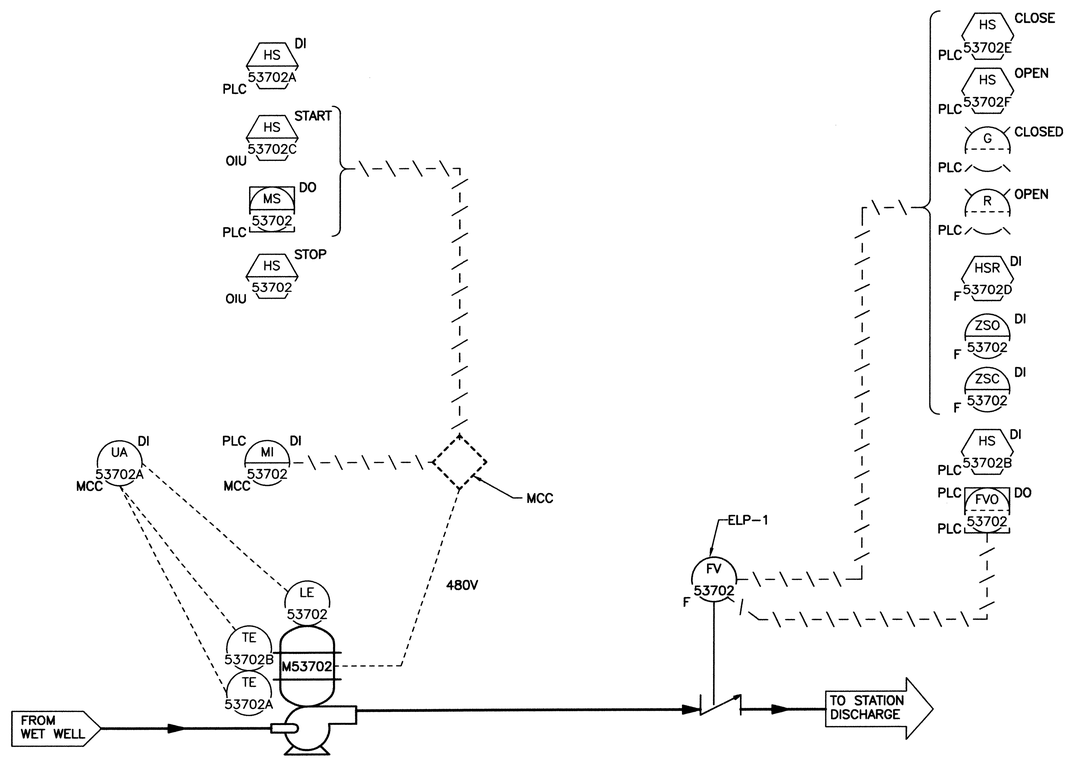

PUMP #2 PID DIAGRAM

N.T.S.

AS BUILT INFORMATION	
CONTRACTOR	
WORK STAKED BY	DATE
INSPECTOR'S ACCEPTANCE BY	DATE
FIELD VERIFICATION BY	DATE
DRAWINGS CORRECTED BY	DATE
MICRO-FILM INFORMATION	
RECORDED BY	DATE
NO.	

BENCH MARKS

SURVEY INFORMATION

FIELD NOTES

NO.	BY	DATE

ENGINEER'S SEAL

STEVEN E. SORENSON NEW MEXICO 6570 REGISTERED PROFESSIONAL ENGINEER

16 July 2002

REVISIONS

NO.	DATE	REMARKS	BY

DESIGN

		DATE
DESIGNED BY	WNH	10-00
DRAWN BY	RA	10-00
CHECKED BY	SES	7-02

2701 MILES RD SE
ALBUQUERQUE, NM 87106
TEL: 505.242-5700
FAX: 505.242-0673

MOLZEN-CORBIN & Associates
ENGINEERS/ARCHITECTS/PLANNERS

CITY OF ALBUQUERQUE
PUBLIC WORKS DEPARTMENT
ENGINEERING DEVELOPMENT GROUP

TITLE: STORM WATER PUMP STATION #37 REHABILITATION

BELL STATION #37
ELECTRICAL P & ID
DIAGRAM, SHEET 2

Design Review Committee	City Engineer Approval	Last Design Update	Mo./Day/Yr.	Mo./Day/Yr.
APPROVED JUL 19 2002 DESIGN REVIEW COMMITTEE	APPROVED JUL 19 2002 CITY ENGINEER			

City Project No.	Zone Map No.	Sheet	
4682.91	L-14	I-03	21 Of 25

© COPYRIGHT

EAB3703.DWG 1=1 7/3/02

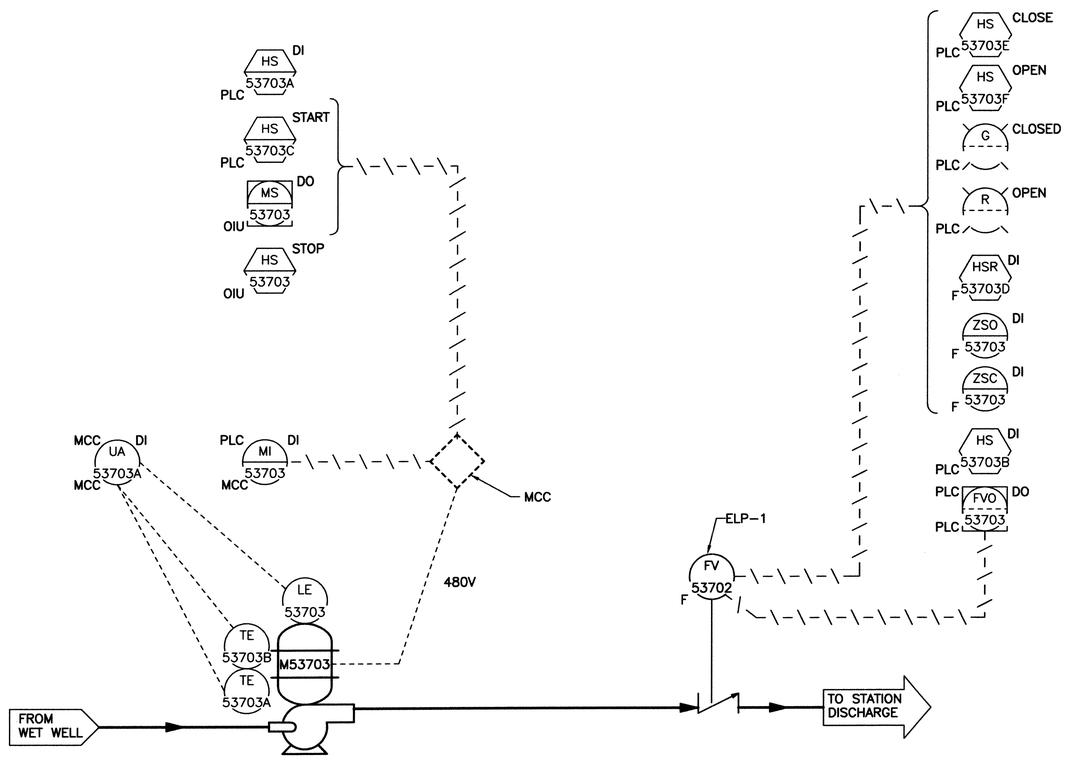

PUMP #3 PID DIAGRAM

N.T.S.

© COPYRIGHT

AS BUILT INFORMATION

CONTRACTOR
WORK
STARTED BY DATE
WORK STOPPED
ACCEPTANCE BY DATE
FIELD
VERIFICATION BY DATE
DRAWINGS
CORRECTED BY DATE
MICRO-FILM INFORMATION
RECORDED BY DATE
NO.

BENCH MARKS

SURVEY INFORMATION

FIELD NOTES

NO.	BY	DATE

ENGINEER'S SEAL

STEVEN E. SORENSON
NEW MEXICO
6570
REGISTERED PROFESSIONAL ENGINEER

16 July 2002

NO.	DATE	REMARKS	BY

REVISIONS

DESIGN

DESIGNED BY	WNH	DATE 10-00
DRAWN BY	RA	DATE 10-00
CHECKED BY	SES	DATE 7-02

2701 MILES RD SE
ALBUQUERQUE, NM 87106
TEL: 505.242-5700
FAX: 505.242-0673

MOLZEN-CORBIN & Associates
ENGINEERS/ARCHITECTS/PLANNERS

CITY OF ALBUQUERQUE
PUBLIC WORKS DEPARTMENT
ENGINEERING DEVELOPMENT GROUP

TITLE: STORM WATER PUMP STATION #37 REHABILITATION

BELL STATION #37
ELECTRICAL P & ID
DIAGRAM, SHEET 3

Design Review Committee	City Engineer Approval	Last Design Update	Mo./Day/Yr.	Mo./Day/Yr.
APPROVED JUL 19 2002 DESIGN REVIEW COMMITTEE	APPROVED JUL 19 2002 CITY ENGINEER			

City Project No.	Zone Map No.	Sheet
4682.91	L-14	I-04 22 Of 25

EAB37104.DWG 1=1 7/3/02

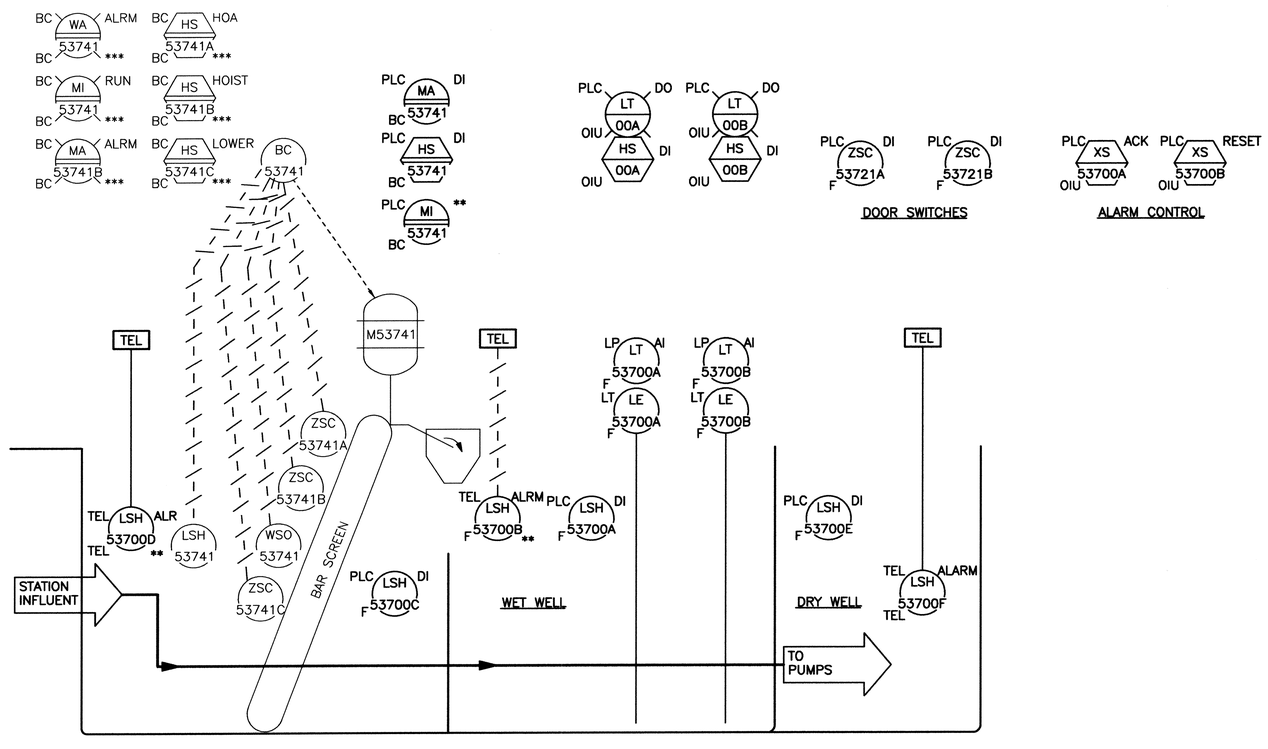

BARSCREEN PID DIAGRAM

N.T.S.

AS BUILT INFORMATION

CONTRACTOR
WORK STARTED ON DATE
WORK COMPLETED ACCEPTANCE BY DATE
FIELD VERIFICATION BY DATE
DRAWINGS CORRECTED BY DATE

MICRO-FILM INFORMATION

RECORDED BY DATE
NO.

BENCH MARKS

SURVEY INFORMATION

FIELD NOTES

NO.	BY	DATE

ENGINEER'S SEAL

STEVEN E. SORENSON NEW MEXICO 6570 REGISTERED PROFESSIONAL ENGINEER

NO.	DATE	REMARKS	BY

REVISIONS

DESIGNED BY	WNH	DATE 10-00
DRAWN BY	RA	DATE 10-00
CHECKED BY	SES	DATE 7-02

2701 MILES RD SE
ALBUQUERQUE, NM 87106
TEL: 505.242-5700
FAX: 505.242-0673

MOLZEN-CORBIN & Associates
ENGINEERS/ARCHITECTS/PLANNERS

CITY OF ALBUQUERQUE
PUBLIC WORKS DEPARTMENT
ENGINEERING DEVELOPMENT GROUP

TITLE: STORM WATER PUMP STATION #37 REHABILITATION

BELL STATION #37
ELECTRICAL P & ID
DIAGRAM, SHEET 4

Design Review Committee	City Engineer Approval	Last Design Update	Mo./Day/Yr.	Mo./Day/Yr.
APPROVED JUL 19 2002 DESIGN REVIEW COMMITTEE	APPROVED JUL 19 2002 CITY ENGINEER			

City Project No.	Zone Map No.	Sheet
4682.91	L-14	I-05

23 Of 25

© COPYRIGHT

EAR37105.DWG 1=1 7/5/02

NOTES

1. SINGLE PAIR TWSH.
2. CUT SHIELD 1/2" SHORTER THAN STRIPPED CABLE PAIRS. INSTALL HEAT SHRINK TUBING TO INSULATE THE SHIELD.

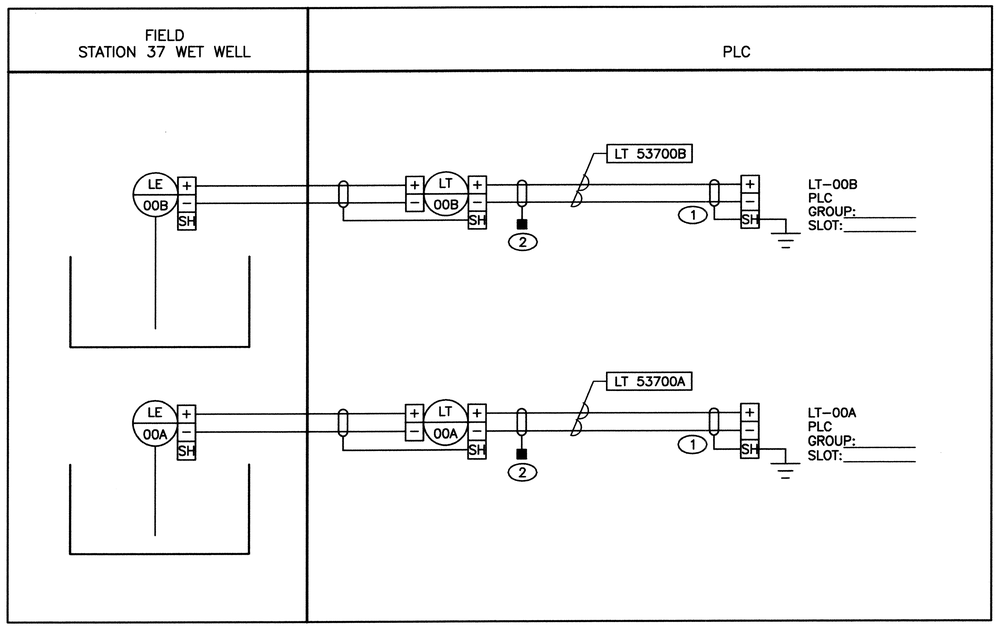

LOOP DIAGRAM
N.T.S.

2701 MILES RD SE
ALBUQUERQUE, NM 87106
TEL: 505.242-5700
FAX: 505.242-0673

MOLZEN-CORBIN & Associates
ENGINEERS/ARCHITECTS/PLANNERS

AS BUILT INFORMATION

CONTRACTOR
WORK STARTED BY DATE
WORK COMPLETED DATE
ACCEPTANCE BY DATE
FIELD VERIFICATION BY DATE
DRAWINGS CORRECTED BY DATE

MICRO-FILM INFORMATION

RECORDED BY DATE
NO.

BENCH MARKS

SURVEY INFORMATION

FIELD NOTES

NO.	BY	DATE

ENGINEER'S SEAL

STEVEN E. SORENSON
NEW MEXICO
6570
REGISTERED PROFESSIONAL ENGINEER

16 July 2002

REVISIONS

NO.	DATE	REMARKS	BY

DESIGN

DESIGNED BY	WNH	DATE 10-00
DRAWN BY	RA	DATE 10-00
CHECKED BY	SES	DATE 7-02

CITY OF ALBUQUERQUE
PUBLIC WORKS DEPARTMENT
ENGINEERING DEVELOPMENT GROUP

TITLE: STORM WATER PUMP STATION #37 REHABILITATION

BELL STATION #37
LOOP DIAGRAMS,
SHEET 1

Design Review Committee: APPROVED JUL 19 2002 DESIGN REVIEW COMMITTEE

City Engineer Approval: APPROVED JUL 19 2002 CITY ENGINEER

Last Design Update | Mo./Day/Yr. | Mo./Day/Yr.

City Project No. 4682.91 | Zone Map No. L-14 | Sheet I-06 | 24 Of 25

© COPYRIGHT

EAB3706.DWG 1=1 7/3/02

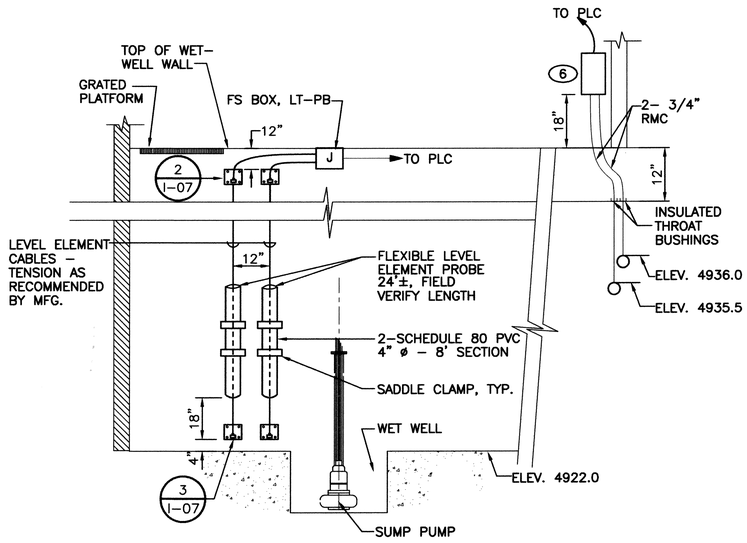

1 / E-06 LEVEL ELEVEL AND FLOAT INSTALLATION
SCALE: N.T.S.

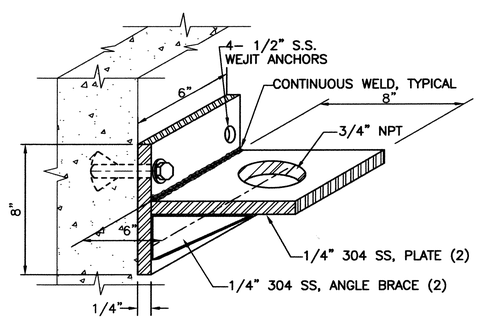

2 / I-07 TRANSMITTER UPPER BRACKET (4)
SCALE: N.T.S.

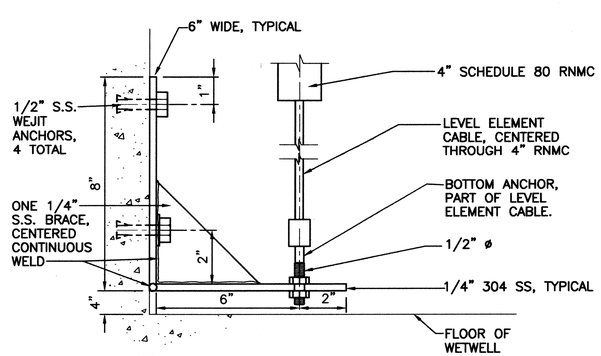

3 / I-07 CABLE ANCHOR
SCALE: N.T.S.

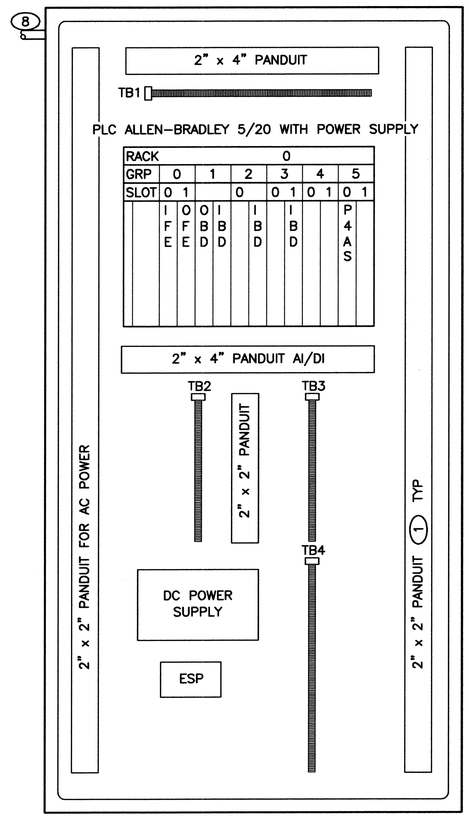

PLC LAYOUT
N.T.S.

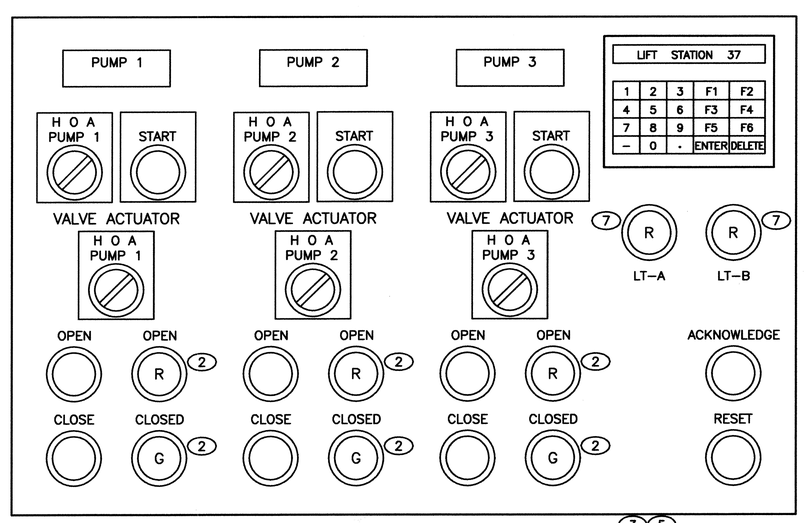

PLC DOOR
N.T.S.

TERMINAL BLOCK ID

TB1. M53701, M53702, M53703, M53704, M53741 — DISCRETE DEVICES SEE SHEETS: E10, E11, E13, E14

TB2. LT53700A, LT53700B, — ANALOG DEVICES SEE SHEET I-06

TB3. DC DOOR DEVICES, THIS SHEET

TB4. AC DOOR DEVICES, THIS SHEET

KEYED NOTES

1. NOT ALL PANDUIT SHOWN. PROVIDE SUFFICIENT PANDUIT TO SEPARATE AC AND DC SYSTEMS.
2. LED TYPE INDICATOR.
3. PROVIDE STEEL ENCLOSURE, NEMA 12, SINGLE HINGED DOOR.
4. 1/4" WELD ALL AROUND AS REQUIRED, HOT DIP GALVANIZE AFTER FABRICATION, OR ALL SS.
5. OBTAIN UL LISTING FOR CONTROL PANEL.
6. 12 BY 16 NEMA 4 ENCLOSURE WITH SEVEN BUCHANAN B112 TBS. LEAVE FOUR FEET OF EACH FLOAT CABLE COILED IN ENCLOSURE.
7. MOMENTARY CONTACT ILLUMINATED PUSH BUTTON 24VDC RED LED. ALLEN-BRADELY 800T-QBH24R OR ENGINEER APPROVED SUBSTITUTION.
8. 1" CONDUIT TO EXISTING TELEMETRY UNIT. CONNECTIONS FROM PLC COMMUNICATIONS MODULE TO TELEMETRY BY CITY.

AS BUILT INFORMATION
CONTRACTOR WORK STAKED BY — DATE
INSPECTOR'S ACCEPTANCE BY — DATE
FIELD VERIFICATION BY — DATE
DRAWINGS CORRECTED BY — DATE
MICRO-FILM INFORMATION
RECORDED BY — DATE
NO.

BENCH MARKS

SURVEY INFORMATION
FIELD NOTES

NO.	BY	DATE

ENGINEER'S SEAL
STEVEN E. SORENSON
NEW MEXICO 6570
REGISTERED PROFESSIONAL ENGINEER
16 July 2002

NO.	DATE	REMARKS	BY

REVISIONS

DESIGN

DESIGNED BY	WNH	DATE 10-00
DRAWN BY	RA	DATE 10-00
CHECKED BY	SES	DATE 7-02

2701 MILES RD SE
ALBUQUERQUE, NM 87106
TEL: 505.242-5700
FAX: 505.242-0673
MOLZEN-CORBIN & Associates
ENGINEERS/ARCHITECTS/PLANNERS

CITY OF ALBUQUERQUE
PUBLIC WORKS DEPARTMENT
ENGINEERING DEVELOPMENT GROUP

TITLE: STORM WATER PUMP STATION #37 REHABILITATION

BELL STATION #37 INSTALLATION DETAILS

Design Review Committee: APPROVED JUL 19 2002 DESIGN REVIEW COMMITTEE

City Engineer Approval: APPROVED JUL 19 2002 CITY ENGINEER

Last Design Update | Mo./Day/Yr. | Mo./Day/Yr.

City Project No.	Zone Map No.	Sheet
4682.91	L-14	I-07 25 Of 25

© COPYRIGHT

EAB37I07.DWG 1=12 7/3/02