2 3 4 5 6 7 8 9 10 11 12 13 14 15
26-5038 -2011

PUBLIC IMPROVEMENT PLANS

FOR

FOUR HILLS VILLAGE - 20th INSTALLMENT, UNIT ONE

ALBUQUERQUE, NEW MEXICO

SCANNED BY PLANNING

JUNE 2001

PREPARED FOR:
AZUELO, L.L.C.
5905 AZUELO NW
ALBUQUERQUE, NM 87120

PREPARED BY:
ISAACSON & ARFMAN, P.A.
128 MONROE ST. NE
ALBUQUERQUE, NM 87108

INDEX TO DRAWINGS

SHEET NO.	TITLE
1	COVER SHEET
2A-2B	PLAT
3	GRADING & DRAINAGE PLAN
4	GRADING & DRAINAGE PLAN
5	GRADING DETAILS & SECTIONS
6	GRADING DETAILS & SECTIONS
7	GRADING DETAILS & SECTIONS
	PAVING PLAN & PROFILE SHEETS
8	MASTER PAVING & STORM DRAIN PLAN
9	PAVING DETAILS & SECTIONS
10	VIA POSADA STREET – STA 10+00.00 TO STA 19+50.00
11	VIA POSADA STREET – STA 19+50.00 TO END VIA POSADA STUB STA 10+00.00 TO END
12	VIA POSADA OFFSITE – STA 8+00.00 TO STA 10+00.00 LOT 3 STA 10+00.00 TO END
13	SPARROW HAWK COURT STA 10+00.00 TO END
14	OWL COURT STA 10+00.00 TO END ACCIPITRINE COURT STA 10+00.00 TO END
15	ACCESS EASEMENT STA 10+00.00 TO END
	UTILITY PLAN & PROFILE SHEETS
16	MASTER UTILITY PLAN
17	VIA POSADA STREET – STA 10+00.00 TO STA 19+50.00
18	VIA POSADA STREET – STA 19+50.00 TO END VIA POSADA STUB STA 10+00.00 TO END
19	SPARROW HAWK COURT STA 10+00.00 TO END
20	OWL COURT STA 10+00.00 TO END ACCIPITRINE COURT STA 10+00.00 TO END
21	ACCESS EASEMENT STA 10+00.00 TO END
22	SIGNING & CONSTRUCTION TRAFFIC CONTROL STANDARDS
23	TYPICAL TRAFFIC CONTROL & SIGNING EXAMPLES

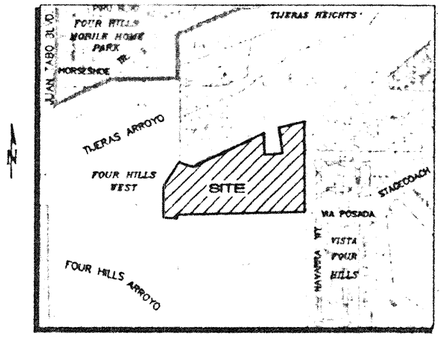

VICINITY MAP

GENERAL NOTES

1. ALL WORK DETAILED ON THESE PLANS TO BE PERFORMED UNDER CONTRACT SHALL, EXCEPT AS OTHERWISE STATED OR PROVIDED FOR HEREON, BE CONSTRUCTED IN ACCORDANCE WITH THE CITY OF ALBUQUERQUE STANDARD SPECIFICATIONS FOR PUBLIC WORKS CONSTRUCTION 1986 EDITION AS AMENDED WITH UPDATE NO. 6.

2. ALL WORK ON THIS PROJECT SHALL BE PERFORMED IN ACCORDANCE WITH APPLICABLE FEDERAL, STATE, AND LOCAL LAWS, RULES, AND REGULATIONS CONCERNING CONSTRUCTION SAFETY AND HEALTH.

3. PRIOR TO CONSTRUCTION, THE CONTRACTOR SHALL EXCAVATE & VERIFY THE HORIZONTAL AND VERTICAL LOCATIONS OF ALL OBSTRUCTIONS. SHOULD A CONFLICT EXIST, THE CONTRACTOR SHALL NOTIFY THE ENGINEER SO THAT THE CONFLICT CAN BE RESOLVED WITH MINIMUM DELAY.

4. TWO (2) WORKING DAYS PRIOR TO ANY EXCAVATION, CONTRACTOR MUST CONTACT NEW MEXICO ONE CALL SYSTEM @ 260-1990 FOR LOCATION OF EXISTING UTILITIES.

5. CONTRACTOR SHALL CONDUCT HIS OPERATIONS IN A MANNER WHICH WILL MINIMIZE INTERFERENCE WITH LOCAL TRAFFIC. CONTRACTOR SHALL COMPLY WITH ALL APPLICABLE LAWS, ORDINANCES, RULES, REGULATIONS, AND ORDERS OF ANY PUBLIC BODY HAVING JURISDICTION FOR THE SAFETY OF PERSONS OR PROPERTY, AND TO PROTECT THEM FROM DAMAGE, INJURY, OR LOSS. CONTRACTOR SHALL ERECT AND MAINTAIN, AS REQUIRED BY THE CONDITIONS AND PROGRESS OF THE WORK, ALL NECESSARY SAFEGUARDS FOR SAFETY CONTINUOUSLY AND NOT LIMITED TO NORMAL WORKING HOURS, THROUGHOUT THE DURATION OF THE PROJECT. CONTRACTOR SHALL ADHERE TO SECTION 18 OF THE GENERAL CONDITIONS OF THE CITY OF ALBUQUERQUE STANDARD SPECIFICATIONS FOR PUBLIC WORKS CONSTRUCTION, 1986, AS AMENDED WITH UPDATE NO. 6.

6. THE CONTRACTOR AGREES THAT HE SHALL ASSUME THE SOLE AND COMPLETE RESPONSIBILITY FOR THE JOB SITE CONDITIONS DURING THE COURSE OF CONSTRUCTION OF THIS PROJECT, INCLUDING SAFETY OF ALL PERSONS AND PROPERTY; THAT THIS REQUIREMENT SHALL APPLY CONTINUOUSLY AND NOT BE LIMITED TO NORMAL WORKING HOURS; AND THAT THE CONTRACTOR SHALL DEFEND, INDEMNIFY, AND HOLD HARMLESS THE OWNER & ENGINEER FROM ANY AND ALL LIABILITY REAL OR ALLEGED, IN CONNECTION WITH THE PERFORMANCE OF WORK ON THIS PROJECT, EXCEPTING LIABILITY ARISING FROM THE SOLE NEGLIGENCE OF THE OWNER OR ENGINEER.

7. TRAFFIC CONTROL: FIVE (5) WORKING DAYS PRIOR TO BEGINNING CONSTRUCTION THE CONTRACTOR SHALL SUBMIT TO THE CONSTRUCTION COORDINATION DIVISION A DETAILED CONSTRUCTION SCHEDULE. TWO (2) WORKING DAYS PRIOR TO CONSTRUCTION, THE CONTRACTOR SHALL OBTAIN A BARRICADING PERMIT FROM THE CONSTRUCTION COORDINATION DIVISION. CONTRACTOR SHALL NOTIFY BARRICADE ENGINEER (768-2551) PRIOR TO OCCUPYING AN INTERSECTION. SEE SECTION 19 OF THE SPECIFICATIONS. ALL STREET STRIPING ALTERED OR DESTROYED SHALL BE REPLACED WITH PLASTIC REFLECTORIZED PAVEMENT MARKINGS BY CONTRACTOR TO LOCATION AS EXISTING OR AS SHOWN IN THIS PLAN SET.

8. WHEN ABUTTING EXISTING PAVEMENT TO NEW, SAWCUT EXISTING PAVEMENT TO A STRAIGHT EDGE AND AT A RIGHT ANGLE, OR AS APPROVED BY THE FIELD ENGINEER. REMOVAL OF BROKEN OR CRACKED PAVEMENT WILL ALSO BE REQUIRED.

9. EXISTING CURB AND GUTTER NOT TO BE REMOVED UNDER THE CONTRACT WHICH IS DAMAGED OR DISPLACED BY THE CONTRACTOR SHALL BE REMOVED AND REPLACED BY THE CONTRACTOR AT HIS EXPENSE.

10. ALL FINAL BACKFILL FOR TRENCHES SHALL BE COMPACTED TO A MINIMUM 90% MAXIMUM DENSITY PER ASTM D-1557 AND AS DIRECTED BY SECTION 701.14.2 AND STANDARD DRAWING NUMBER 2315.

11. THE CONTRACTOR SHALL PROMPTLY CLEAN UP ANY MATERIAL EXCAVATED WITHIN THE PUBLIC RIGHT-OF-WAY OR PRIVATE ROADWAY EASEMENTS SO THAT THE EXCAVATED MATERIAL IS NOT SUSCEPTIBLE TO BEING WASHED DOWN THE STREET OR INTO ANY PUBLIC DRAINAGE FACILITY.

12. PROPOSED WATERLINE MATERIALS SHALL BE EITHER PVC PIPE MEETING AWWA C900 REQUIREMENTS (6"-12") OR DUCTILE IRON PIPE, THICKNESS CLASS 50 (6"-16").

13. ALL SANITARY SEWER LINE STATIONING REFERS TO SANITARY SEWER CENTERLINE STATIONING.

14. ALL FITTINGS ON WATERLINES SHALL HAVE RESTRAINED JOINTS AS NOTED ON THE PLANS.

15. CONTRACTOR SHALL SUPPORT ALL EXISTING, UNDERGROUND UTILITY LINES WHICH BECOME EXPOSED DURING CONSTRUCTION. PAYMENT FOR SUPPORTING WORK SHALL BE INCIDENTAL TO WATERLINE AND/OR SEWERLINE COSTS.

16. CONTRACTOR SHALL ASSIST THE ENGINEER/INSPECTOR IN THE RECORDING OF DATA ON ALL UTILITY LINES AND ACCESSORIES AS REQUIRED BY THE CITY OF ALBUQUERQUE FOR THE PREPARATION OF RECORD DRAWINGS. CONTRACTOR SHALL NOT COVER UTILITY LINES AND ACCESSORIES UNTIL ALL DATA HAS BEEN RECORDED.

17. THE CONTRACTOR SHALL NOTIFY THE ENGINEER NOT LESS THAN SEVEN (7) DAYS PRIOR TO STARTING WORK IN ORDER THAT THE ENGINEER MAY TAKE NECESSARY MEASURES TO INSURE THE PRESERVATION OF SURVEY MONUMENTS. CONTRACTOR SHALL NOT DISTURB PERMANENT SURVEY MONUMENTS WITHOUT THE CONSENT OF THE ENGINEER AND SHALL NOTIFY THE ENGINEER AND BEAR THE EXPENSE OF REPLACING ANY THAT MAY BE DISTURBED WITHOUT PERMISSION. REPLACEMENT SHALL BE DONE ONLY BY THE CITY SURVEYOR. WHEN A CHANGE IS MADE IN THE FINISHED ELEVATIONS OF THE PAVEMENT OF ANY ROADWAY IN WHICH A PERMANENT SURVEY MONUMENT IS LOCATED, CONTRACTOR SHALL, AT HIS OWN EXPENSE, ADJUST THE MONUMENT COVER TO THE NEW GRADE UNLESS OTHERWISE SPECIFIED. REFER TO SECTION 4.4 OF THE GENERAL CONDITIONS OF THE STANDARD SPECIFICATIONS.

18. PNM WILL PROVIDE AT NO COST TO THE CITY OR THE CONTRACTOR THE REQUIRED PERSONNEL FOR INSPECTION OR OBSERVATION DEEMED NECESSARY BY PNM WHILE THE CONTRACTOR IS EXPOSING PNM'S CABLES. HOWEVER, THE CONTRACTOR SHALL BE CHARGED THE TOTAL COST ASSOCIATED WITH REPAIRS TO ANY DAMAGED CABLES OR FOR ANY COST ASSOCIATED WITH SUPPORTING OR RELOCATING THE POLES AND CABLES DURING CONSTRUCTION.

19. WARNING--EXISTING UTILITY LINE LOCATIONS ARE SHOWN IN AN APPROXIMATE MANNER ONLY, AND SUCH LINES MAY EXIST WHERE NONE ARE SHOWN. THE LOCATION OF ANY SUCH EXISTING LINES IS BASED UPON INFORMATION PROVIDED BY THE UTILITY COMPANY, THE OWNER, OR BY OTHERS, AND THE INFORMATION MAY BE INCOMPLETE OR MAY BE OBSOLETE BY THE TIME CONSTRUCTION COMMENCES.

    THE ENGINEER HAS UNDERTAKEN NO FIELD VERIFICATION OF THE LOCATION, DEPTH, SIZE, OR TYPE OF EXISTING UNDERGROUND UTILITY LINES, MAKES NO REPRESENTATION PERTAINING THERETO, AND ASSUMES NO RESPONSIBILITY OR LIABILITY THEREFOR. THE CONTRACTOR SHALL INFORM ITSELF OF THE LOCATION OF ANY UTILITY LINE IN OR NEAR THE AREA OF THE WORK IN ADVANCE OF AND DURING EXCAVATION WORK. THE CONTRACTOR IS FULLY RESPONSIBLE FOR ANY AND ALL DAMAGE CAUSED BY ITS FAILURE TO LOCATE, IDENTIFY, AND PRESERVE ANY AND ALL EXISTING UTILITIES. THE CONTRACTOR SHALL COMPLY WITH STATE STATUTES, MUNICIPAL AND LOCAL ORDINANCES, RULES AND REGULATIONS PERTAINING TO THE LOCATION OF THESE LINES AND FACILITIES, IN PLANNING AND CONDUCTING EXCAVATION, WHETHER BY CALLING OR NOTIFYING THE UTILITIES, COMPLYING WITH "BLUE STAKES" PROCEDURES, OR OTHERWISE.

20. FOR STORM DRAIN CONSTRUCTION, RCP PIPE JOINTS SHALL NOT BE GROUTED PRIOR TO FINAL INSPECTION. FINAL INSPECTION WILL DETERMINE JOINTS TO BE GROUTED FOR FINAL ACCEPTANCE OF THE CONSTRUCTION.

21. ALL EXCAVATION, TRENCHING AND SHORING ACTIVITIES MUST BE ACCOMPLISHED IN ACCORDANCE WITH OSHA 29CFR 1926.650 SUBPART P.

22. CONTRACTOR SHALL MAINTAIN A GRAFFITI-FREE WORK SITE. CONTRACTOR SHALL PROMPTLY REMOVE ANY AND ALL GRAFFITI FROM EQUIPMENT, WHETHER PERMANENT OR TEMPORARY.

REV	SHEETS	CITY ENGINEER	DATE	USER DEPARTMENT	DATE	USER DEPARTMENT	DATE

ENGINEERS STAMP & SIGNATURE

GENEVIEVE L. DONART NEW MEXICO 15088 7/9/01

APPROVALS	ENGINEER	DATE
DRC Chairman		7-10-01
Transportation		7-09-01
Water/Wastewater		7/09/01
Hydrology		7-9-01
AMAFCA		
Constr. Mngmt.		
Constr. Coord.		7-10-01

APPROVED FOR CONSTRUCTION

City Engineer — Date 7/13/01

DRB NO. 1000320

ISAACSON & ARFMAN, P.A.
Consulting Engineering Associates
128 Monroe Street N.E.
Albuquerque New Mexico

City Project No. 5038

Sheet 1 Of 23

SCANNED BY PLANNING

TALOS LOG NO.: 2001242863

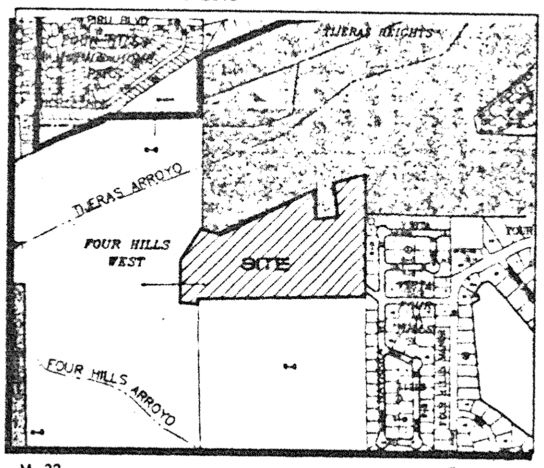

M-22 1"=750'±

VICINITY MAP

PLAT FOR FOUR HILLS VILLAGE 20TH INSTALLMENT, UNIT 1

BEING A REPLAT OF
TRACT C, FOUR HILLS VILLAGE
20TH INSTALLMENT

WITHIN
SECTIONS 27, 33 AND 34
TOWNSHIP 10 NORTH, RANGE 4 EAST, NMPM
CITY OF ALBUQUERQUE
BERNALILLO COUNTY, NEW MEXICO

JUNE, 2001

SUBDIVISION DATA / NOTES

1. Total Number of Existing Tracts: 1
2. Total Number of Lots created: 42
3. Total Number of Tracts created: 0
4. Gross Subdivision Acreage: 120.3401 Ac.
5. Total Mileage of Full Width Streets Created: 0.5433 miles
6. Bearings are New Mexico State Plane Grid Bearings (Central Zone).
7. Distances are ground distances.
8. Bearings and distances in parenthesis are record.
9. Basis of boundary are the following plats (and documents) of record entitled:
"BULK LAND PLAT FOR FOUR HILLS VILLAGE 20TH INSTALLMENT TRACTS A, B, AND C" (12-29-98, 98C-367)
"SUMMARY PLAT FOR ANNEXATION, FOUR HILLS WEST" (1-7-81, C17-174).
"AMENDED REPLAT OF TRACT 1, VISTA FOUR HILLS" (5-25-79, D9-133).
"SUMMARY PLAT FOR ANNEXATION TO THE CITY OF ALBUQUERQUE OF NW1/4, NE1/4, S1/2NE1/4, NW1/4 AND NW1/4 OF SECTION 33, T.10N., R.4E., N.M.P.M." (8-24-82, C20-24).
"UNIT NO 1, 2, 3, 4 AND 5, FOUR HILLS MOBILE HOME PARK" (12-7-78, D9-39)
"AMENDED PLAT OF TIJERAS HEIGHTS" (12-18-78, D9-42)
"SUMMARY PLAT, BEING A REPLAT OF A SUMMARY PLAT OF TIJERAS HEIGHTS" (5-31-78, D8-139).
"WARRANTY DEED" (Document No. 82-18044)
"QUITCLAIM DEED" (Document No. 82-18045)
"WARRANTY DEED" (Document No. 86-122458)
"WARRANTY DEED" (Document No. 86-122461)
"WARRANTY DEED" (Document No. 86-122464)
All being records of Bernalillo County, New Mexico.
10. Field Survey performed December 29, 1998
11. Title Report: None.
12. This property is apparently affected by reservations, restrictions and agreements contained within easements, documents and memorandums as listed within the above mentioned Title Report.
13. Maintenance of the private drainage easements as shown hereon shall be the responsibility of the owners and/or proprietors of the individual properties in which the easements exist.
14. Maintenance of the private access easements as shown hereon shall be the responsibility of the owners and/or proprietors of the individual properties in which the easements exist.
15. City Standard Utility Note II: "City of Albuquerque Water and Sanitary Sewer Service to Four Hills Village Subdivision 20th installment must be verified and coordinated with the Public Works Department, City of Albuquerque."
16. Centerline (in lieu of R/W) monumentation to be installed at all centerline PC's, PT's, angle points and street intersections prior to acceptance of subdivision street improvements and will consist of a standard four-inch (4") aluminum alloy cap stamped "City of Albuquerque", "Centerline Monumentation", "Survey Marker", "Do Not Disturb", "PLS #7719"
17. Unless otherwise noted, all points shown as (●) are SET 5/8" REBAR with CAP "ALS LS# 7719" Points shown as (○) are "FOUND" with type of marker noted on plans.

ALDRICH LAND SURVEYING
P.O. BOX 30701, ALBQ., N.M. 87190
505-884-1990
16SPT1.DWG 6/18/01

LEGAL DESCRIPTION

A tract of land situate within Section 34, Township 10 North, Range 4 East, New Mexico Principal Meridian, City of Albuquerque Bernalillo County, New Mexico being all of TRACT C, FOUR HILLS VILLAGE 20TH INSTALLMENT as the same is shown and designated on said plat filed for record in the office of the County Clerk of Bernalillo County, New Mexico on December 29, 1998 in Book 98C, Page 367 and being more particularly described as follows:

BEGINNING at the northeast corner of the herein described tract, from whence the Albuquerque Control Survey Monument "5-M22" bears S 73°01'22" E, 607.40 feet;

THENCE S 00°40'49" W, 965.94 feet along a line common with the west line of BLOCK 1, VISTA FOUR HILLS as the same is shown and designated on said plat filed for record in the office of the County Clerk of Bernalillo County, New Mexico on May 25, 1979 in Volume D9, Folio 133 to the southeast corner, said point also being on the west line of BLOCK 4, VISTA FOUR HILLS as the same is shown and designated on said plat filed for record in the office of the County Clerk of Bernalillo County, New Mexico on May 25, 1979 in Volume D9, Folio 133;

THENCE leaving said west line N 87°22'47" W, 1334.54 feet to a point,

(LEGAL DESCRIPTION CONTINUED ON SHEET 4)

DISCLOSURE STATEMENT

The intent of this plat is to subdivide the subject tract into 42 residential lots, to dedicate public right-of-way, and to grant those easements necessary to serve the residential development.

FREE CONSENT AND DEDICATION

The subdivision shown hereon is with the free consent and in accordance with the desires of the undersigned Owner(s) and/or Proprietor(s) thereof and said Owner(s) and/or Proprietor(s) do hereby dedicate all streets and public right-of-way shown hereon to the City of Albuquerque in fee simple with warranty covenants and do hereby grant: all access, utility and drainage easements shown hereon including the right to construct, operate, inspect, and maintain facilities therein; and all public utility easements shown hereon for the common and joint use of gas, electrical power and communication services for overhead and/or buried distribution lines, conduits, and pipes for underground and/or overhead utilities where shown or indicated, and including the right of ingress and egress for construction and maintenance, and the right to trim interfering trees and shrubs. Said Owner(s) and/or Proprietor(s) do hereby consent to all of the foregoing and do hereby certify that this subdivision is their free act and deed.

OWNER

AZUELO L.L.C.
A NEW MEXICO LIMITED LIABILITY COMPANY

BO JOHNSON, MANAGING MEMBER Date

ACKNOWLEDGMENT

STATE OF NEW MEXICO }SS
COUNTY OF BERNALILLO)

This instrument was acknowledged before me on ______________, 2001, by Bo Johnson as a member of Azuelo, L.L.C., on behalf of said Limited Liability Company.

My Commission Expires: ______________

Notary Public

APPROVALS

DRB PROJECT NO. 1000320
APPLICATION NO.

PUBLIC SERVICE CO. OF NM--ELECTRIC SERVICES DIV. DATE

PUBLIC SERVICE CO. OF NM--GAS SERVICES DIV. DATE

QWEST CORPORATION DATE

COMCAST CABLE DATE

CITY SURVEYOR, ENGR. DIV., P.W.D. DATE

TRAFFIC ENGINEERING, TRANS. DEV. DIV., P.W.D. DATE

PARKS DEPARTMENT DATE

UTILITY DEVELOPMENT DIV., P.W.D. DATE

REAL PROPERTY DIVISION, D.F.M. DATE

A.M.A.F.C.A. DATE

CITY ENGINEER, PUBLIC WORKS DEPT. DATE

APPROVAL AND CONDITIONAL ACCEPTANCE AS SPECIFIED BY THE ALBUQUERQUE SUBDIVISION ORDINANCE, CHAPTER 14, ARTICLE 14 OF THE REVISED ORDINANCES OF ALBUQUERQUE, N.M. 1994.

CITY PLANNER, ALBUQUERQUE PLANNING DIVISION DATE

SURVEYOR'S CERTIFICATION

"I, Timothy Aldrich, a duly qualified Registered Professional Land Surveyor under the laws of the State of New Mexico, do hereby certify that this plat and description were prepared by me or under my supervision, shows all easements as shown on the plat of record or made known to me by the owners and/or proprietors of the subdivision shown hereon, utility companies and other parties expressing an interest and meets the minimum requirements for monumentation and surveys of the Albuquerque Subdivision Ordinance, Chapter 14, Article 14, and further meets the Minimum Standards for Land Surveying in the State of New Mexico (Effective November 1, 1989 and revisions effective December 25, 1991 and February 2, 1994 and October 2000), and is true and correct to the best of my knowledge and belief"

Timothy Aldrich, P.S. No. 7719 Date

PLAT FOR FOUR HILLS VILLAGE 20TH INSTALLMENT, UNIT 1

BEING A REPLAT OF
TRACT C, FOUR HILLS VILLAGE
20TH INSTALLMENT

WITHIN
SECTIONS 27, 33 AND 34
TOWNSHIP 10 NORTH, RANGE 4 EAST, NMPM
CITY OF ALBUQUERQUE
BERNALILLO COUNTY, NEW MEXICO

JUNE, 2001

CURVE TABLE

CURVE	RADIUS	LENGTH	TANGENT	CHORD	BEARING	DELTA
C1	25.00	39.27	25.00	35.36	N 39°47'59" E	90°00'00"
C2	25.00	39.27	25.00	35.36	S 50°12'01" E	90°00'00"
C3	25.00	39.27	25.00	35.36	N 39°47'59" E	90°00'00"
C4	15.00	23.56	15.00	21.21	N 50°12'01" W	90°00'00"
C5	15.00	23.56	15.00	21.21	S 39°47'59" W	90°00'00"
C6	25.00	39.27	25.00	35.36	S 50°12'01" E	90°00'00"
C7	25.00	36.70	22.56	33.50	N 42°44'24" E	84°07'10"
C8	25.00	18.50	9.70	18.08	N 20°31'09" W	42°23'54"
C9	40.00	46.24	26.09	43.71	S 08°36'04" E	66°14'09"
C10	40.00	46.19	26.06	43.67	S 57°35'55" W	66°09'51"
C11	40.00	42.66	23.61	40.67	N 58°45'52" W	61°06'44"
C12	40.00	49.77	28.68	46.62	N 07°26'09" E	71°17'16"
C13	40.00	184.86	43.81	59.08	N 89°19'11" W	264°47'56"
C14	25.00	18.50	9.70	18.08	S 21°52'48" W	42°23'44"
C15	25.00	37.13	22.95	33.81	S 41°51'59" E	85°05'26"
C16	443.11	77.77	38.99	77.67	N 79°20'58" W	10°03'23"
C17	440.00	75.95	38.07	75.86	N 59°20'25" W	09°53'26"
C18	25.00	36.68	22.54	33.48	N 73°34'03" E	84°04'30"
C19	97.00	52.23	26.76	51.60	N 16°06'19" E	30°50'59"
C20	127.00	46.26	23.39	46.01	N 09°45'18" W	20°52'14"
C21	25.00	19.76	10.43	19.25	N 42°50'09" W	45°17'28"
C22	40.00	94.49	97.41	74.00	S 02°11'35" W	135°20'56"
C23	40.00	25.43	13.16	25.00	S 88°04'39" W	36°25'12"
C24	40.00	54.89	42.11	58.00	N 27°14'23" W	92°56'43"
C25	25.00	17.82	9.31	17.45	S 01°11'25" E	40°50'46"
C26	40.00	184.81	43.87	59.12	S 68°52'33" W	264°42'51"
C27	173.00	8.15	4.08	8.15	N 20°15'49" W	02°41'56"
C28	173.00	59.16	29.87	58.88	N 09°07'01" W	19°35'41"
C29	173.00	67.31	34.09	66.89	N 10°27'59" W	22°17'37"
C30	143.00	20.27	10.15	20.25	N 24°44'26" E	08°07'14"
C31	143.00	56.73	28.74	56.36	N 20°09'56" E	22°43'46"
C32	143.00	77.00	39.46	76.07	N 16°06'19" E	30°50'59"
C33	25.00	37.14	22.95	33.81	S 11°01'28" E	85°06'22"
C34	380.00	154.63	78.40	153.56	N 65°14'09" W	23°18'51"
C36 *	380.00	121.42	61.23	120.90	N 86°02'48" W	18°18'27"
C37	380.00	276.04	144.43	270.01	N 74°23'22" W	41°37'17"
C38	410.00	33.85	16.94	33.84	S 87°09'54" W	04°43'51"
C39	410.00	228.98	117.56	226.02	N 74°28'11" W	31°59'58"
C40	410.00	35.00	17.51	34.99	N 56°01'28" W	04°53'28"
C41	410.00	297.84	155.83	291.33	N 74°23'22" W	41°37'18"
C42	120.00	64.61	33.11	63.83	N 16°06'19" E	30°50'59"
C43	150.00	62.72	31.82	62.26	N 11°17'51" W	23°57'21"

*C35 INTENTIONALLY LEFT OFF PLANS

LINE TABLE

LINE	BEARING	DISTANCE
L1	S 23°01'18" E	11.09
L2	S 84°47'59" W	13.35
L3	S 00°43'04" W	24.79
L4	S 53°34'44" E	20.56
L5	N 00°40'49" E	24.74
L6	N 89°19'11" W	14.41
L7	N 00°40'49" E	15.23
L8	N 84°47'59" E	16.59
L9	N 05°12'01" W	20.23
L10	N 05°12'01" W	20.23
L11	S 84°47'59" W	6.59
L12	S 05°12'01" E	20.23
L13	S 05°12'01" E	20.23
L14	S 84°47'59" W	4.00
L15	N 05°12'01" W	20.00
L16	S 84°47'59" W	23.00
L17	S 84°47'59" W	23.00
L18	N 05°12'01" W	20.00
L19	N 54°46'54" W	29.78
L20	N 23°16'31" W	38.18
L21	N 32°24'35" W	34.80
L22	N 87°22'47" W	11.01

LOT AREA TABLE

LOT	AREA (SF)	LOT	AREA (SF)
1	14072	22	14495
2	12673	23	11141
3	12395	24	10413
4	12243	25	15357
5	13431	26	55124
6	14619	27	9958
7	15807	28	11833
8	16995	29	14377
9	18183	30	41188
10	19258	31	25275
11	13547	32	25999
12	14913	33	12761
13	12962	34	11626
14	15618	35	31595
15	15049	36	30429
16	24027	37	12151
17	20354	38	25929
18	11901	39	24042
19	19999	40	24536
20	21192	41	[illegible]
21	11292	42	59337

16SPT1.DWG 6/27/01

LEGAL DESCRIPTION (CONTINUED)

THENCE S 00°43'04" W, 24.79 feet to a point, said point being on the east line of TRACT A, FOUR HILLS VILLAGE 20TH INSTALLMENT as the same is shown and designated on said plat filed for record in the office of the County Clerk of Bernalillo County, New Mexico on December 29, 1998 in Book 98C, Page 367;

THENCE N 87°23'00" W, 132.86 feet along a line common with the east line of said TRACT A to the southwest corner;

THENCE continuing N 01°08'04" W, 270.46 feet to a point;

THENCE continuing N 34°19'37" E, 254.94 feet to the northwest corner;

THENCE leaving said east line S 54°46'54" E, 76.86 feet along the northerly line of the herein described tract to a point;

THENCE continuing N 66°43'25" E, 947.13 feet to a point;

THENCE continuing S 00°00'57" E, 240.00 feet to a point;

THENCE continuing N 87°42'03" E, 152.78 feet to a point;

THENCE continuing N 07°36'10" W, 278.71 feet to a point;

THENCE continuing N 76°01'08" E, 299.14 feet to the point of beginning and containing 21.9235 acres more or less.

PUBLIC UTILITY EASEMENTS

PUBLIC UTILITY EASEMENTS SHOWN ON THIS PLAT ARE GRANTED FOR THE COMMON AND JOINT USE OF

1. THE PUBLIC SERVICE CO. OF NM--ELECTRIC SERVICES DIVISION FOR THE INSTALLATION, MAINTENANCE, AND SERVICE OF UNDERGROUND/OVERHEAD ELECTRICAL LINES, COMMUNICATION LINES, TRANSFORMERS, AND ANY OTHER EQUIPMENT, FIXTURES, STRUCTURES, AND RELATED FACILITIES REASONABLY NECESSARY TO PROVIDE ELECTRICAL SERVICE.
2. QWEST FOR THE INSTALLATION, MAINTENANCE AND SERVICE OF ALL BURIED COMMUNICATION LINES AND OTHER RELATED EQUIPMENT AND FACILITIES REASONABLY NECESSARY TO PROVIDE COMMUNICATION SERVICES, INCLUDING BUT NOT LIMITED TO ABOVE GROUND PEDESTALS AND CLOSURES.
3. COMCAST FOR THE INSTALLATION, MAINTENANCE, AND SERVICE OF SUCH LINES, CABLE, AND OTHER RELATED EQUIPMENT AND FACILITIES REASONABLY NECESSARY TO PROVIDE CABLE TV SERVICE.
4. THE PUBLIC SERVICE CO. OF NM--GAS SERVICES DIVISION FOR THE INSTALLATION, MAINTENANCE, AND SERVICE OF SUCH DISTRIBUTION AND SERVICE LINES AND FACILITIES REASONABLY NECESSARY TO PROVIDE GAS SERVICE.

INCLUDED IS THE RIGHT TO BUILD, REBUILD, CONSTRUCT, RECONSTRUCT, LOCATE, RELOCATE, CHANGE, REMOVE, MODIFY, RENEW, OPERATE, AND MAINTAIN FACILITIES FOR THE PURPOSES DESCRIBED ABOVE, TOGETHER WITH FREE ACCESS TO, FROM, AND OVER SAID EASEMENT, INCLUDING SUFFICIENT WORKING AREA SPACE FOR ELECTRIC TRANSFORMERS, WITH THE RIGHT AND PRIVILEGE TO TRIM AND REMOVE TREES, SHRUBS, OR BUSHES WHICH INTERFERE WITH THE PURPOSES SET FORTH HEREIN. NO BUILDING, SIGN, OR OTHER STRUCTURE SHALL BE ERECTED OR CONSTRUCTED ON SAID EASEMENTS, NOR SHALL ANY WELL BE DRILLED OR OPERATED THEREON. PROPERTY OWNERS SHALL BE SOLELY RESPONSIBLE FOR CORRECTING ANY VIOLATIONS OF NATIONAL ELECTRICAL SAFETY CODE CAUSED BY CONSTRUCTION OF POOLS, DECKING, OR ANY STRUCTURES ADJACENT TO OR NEAR EASEMENTS SHOWN ON THIS PLAT.

EASEMENTS FOR ELECTRIC TRANSFORMERS/SWITCHGEARS, AS INSTALLED, SHALL EXTEND TEN FEET (10') IN FRONT OF TRANSFORMER/SWITCHGEAR DOORS AND FIVE FEET (5') ON EACH SIDE.

In approving this plat, PNM Electric Services and Gas Services (PNM) did not conduct a Title Search of the properties shown hereon. Consequently, PNM does not waive nor release any easement or easement rights to which it may be entitled.

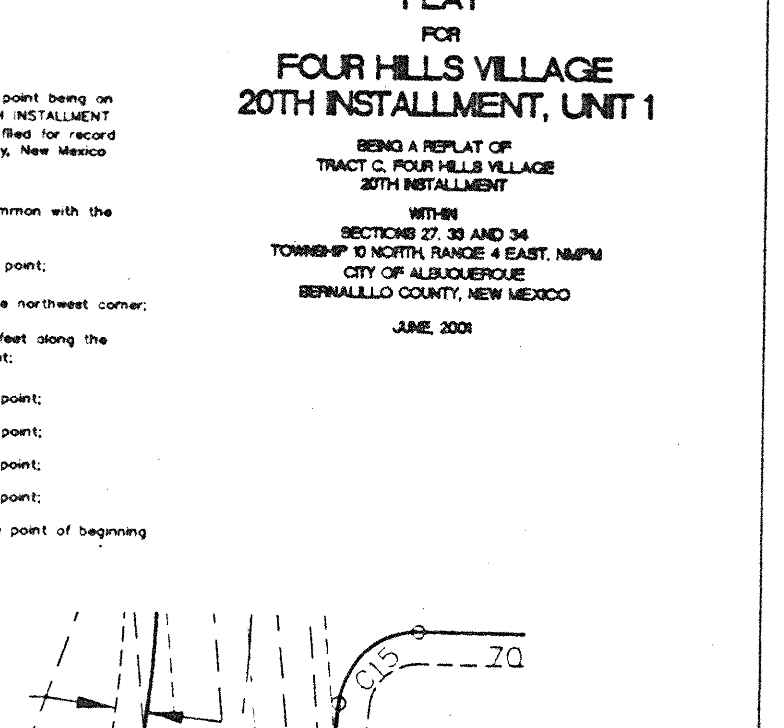

WALL / STRUCTURE SETBACK DETAIL

NOTE: PERIMETER & RETAINING WALLS OR OTHER STRUCTURES ARE RESTRICTED FROM THAT AREA OF THE EXISTING 50 FT. DRAINAGE & UTILITY EASEMENT (EASEMENT 1) OUTSIDE OF THE RIGHT-OF-WAY AS DESIGNATED BY THE HATCHED AREA SHOWN ABOVE.

SCANNED BY PLANNING

PLAT
FOR
FOUR HILLS VILLAGE 20TH INSTALLMENT, UNIT 1

BEING A REPLAT OF
TRACT C, FOUR HILLS VILLAGE
20TH INSTALLMENT

WITHIN
SECTIONS 27, 33 AND 34
TOWNSHIP 10 NORTH, RANGE 4 EAST, NMPM
CITY OF ALBUQUERQUE
BERNALILLO COUNTY, NEW MEXICO

JUNE, 2001

SCALE: 1"=60'

NOTES

1. FOR LINE AND CURVE TABLES, SEE SHEET 4.
2. FOR LOT AREA TABLE, SEE SHEET 4.

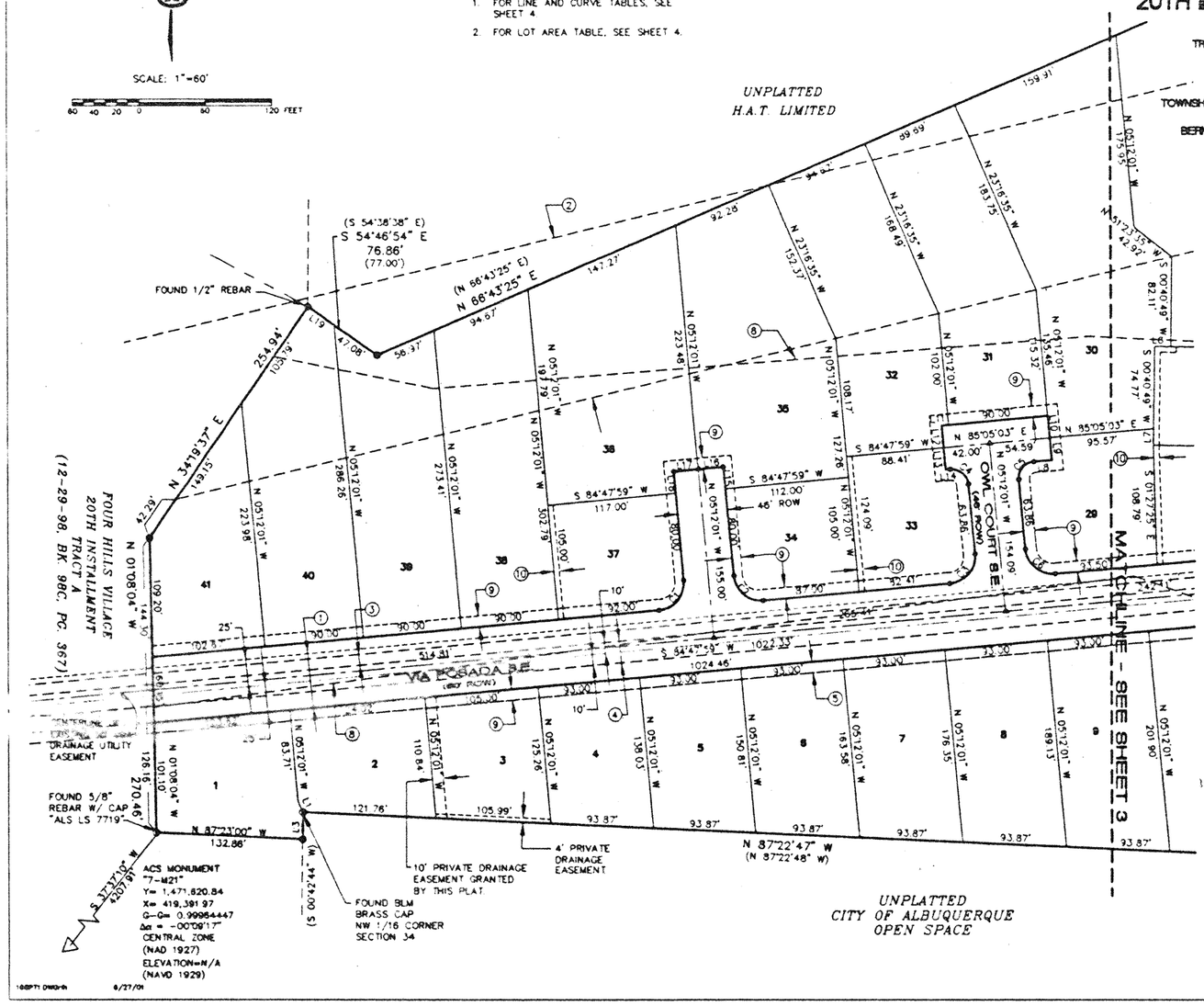

EASEMENTS

1. EXISTING 50' C.O.A. DRAINAGE & UTILITY EASEMENT (01-07-81, C17-174)
2. EXISTING 150' PUBLIC SERVICE COMPANY OF NEW MEXICO EASEMENT (04-01-75, MISC. 414, PG. 443 & 09-08-76, MISC. 495, PG. 479)
3. EXISTING 10' C.O.A. U.G. SEWER LINE EASEMENT (06-21-79, MISC. 698, PGS. 291-293 & 07-09-79, MISC. 702, PGS. 289-291)
4. EXISTING 20' C.O.A. PERMANENT UTILITY EASEMENT (05-16-78, MISC. 608, PGS. 359-364)
5. EXISTING 10' GAS EASEMENT (09-30-97, BK. 97-27, PGS. 113-119)
6. EXISTING 10' PNM & M.S.T.&T. EASEMENT (03-01-77, BK.MISC. 522, PG. 404)
7. EXISTING 15' C.O.A. PUBLIC PEDESTRIAN AND NON-VEHICULAR ACCESS EASEMENT (12-29-98, BK. 98C, PG. 367)
8. EXISTING A.M.A.F.C.A. FLOOD PLAIN EASEMENT GRANTED BY PLAT (12-29-98, 98C-367) TO BE RELEASED UPON ISSUANCE OF A LETTER OF MAP REVISION (LOMR) BY THE FEDERAL EMERGENCY MANAGEMENT AGENCY (FEMA) AND UPON ISSUANCE OF A QUITCLAIM DEED FROM A.M.A.F.C.A. TO THE UNDERLYING PROPERTY OWNER.
9. 10' PUBLIC UTILITY EASEMENT GRANTED BY THIS PLAT.
10. 5' PRIVATE DRAINAGE EASEMENT GRANTED BY THIS PLAT.
11. 22' PRIVATE ACCESS, WATER, SANITARY SEWER, AND DRAINAGE EASEMENT GRANTED BY THIS PLAT.
12. 10' PNM & QWEST EASEMENT GRANTED BY THIS PLAT.

168PT1 DWG/dh 6/27/01

PLAT
FOR
FOUR HILLS VILLAGE 20TH INSTALLMENT, UNIT 1

BEING A REPLAT OF
TRACT C, FOUR HILLS VILLAGE
20TH INSTALLMENT

WITHIN
SECTIONS 27, 33 AND 34
TOWNSHIP 10 NORTH, RANGE 4 EAST, NMPM
CITY OF ALBUQUERQUE
BERNALILLO COUNTY, NEW MEXICO

JUNE, 2001

SCALE: 1"=60'

NOTES

1. FOR LINE AND CURVE TABLES, SEE SHEET 4.
2. FOR LOT AREA TABLE, SEE SHEET 4.

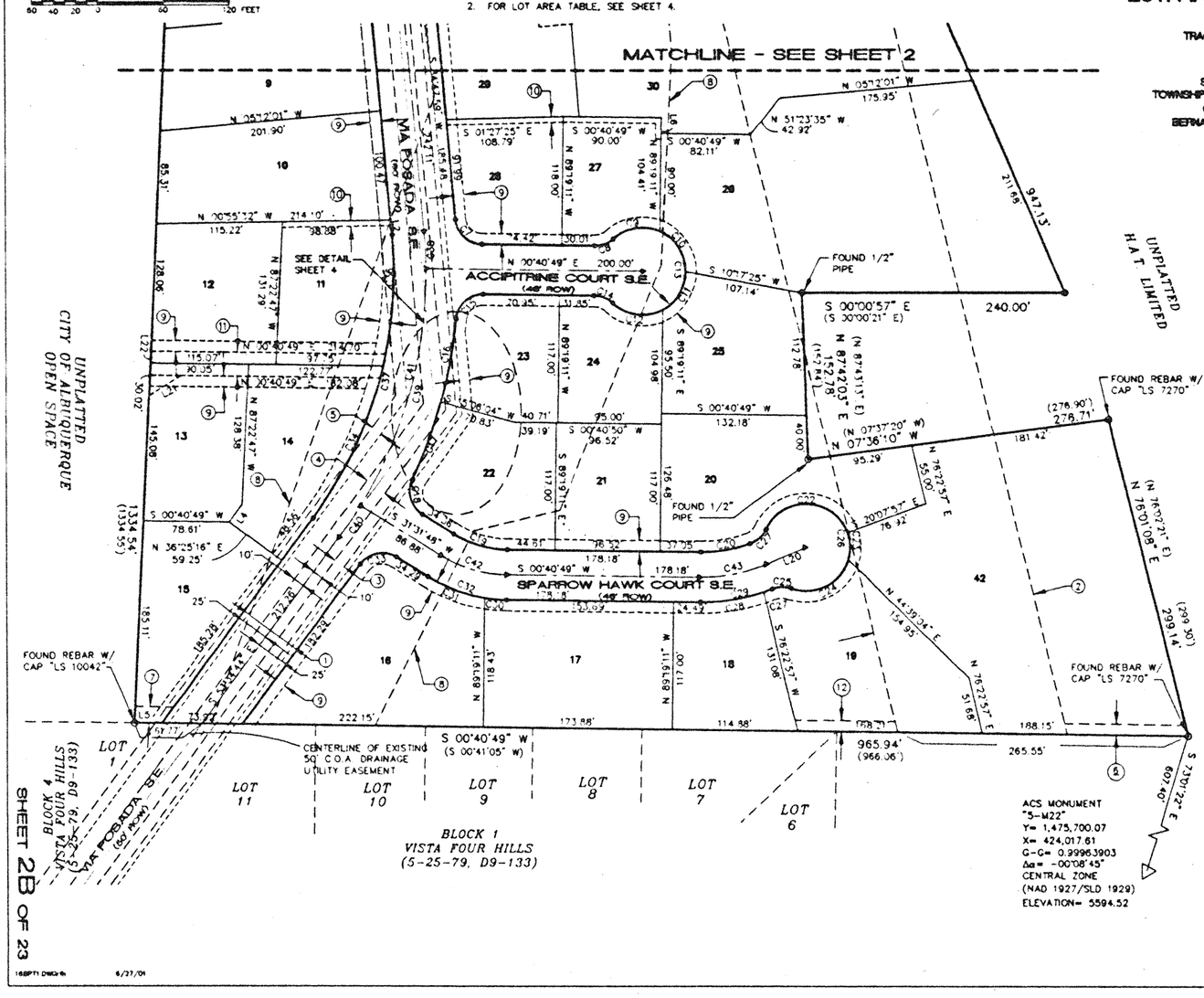

EASEMENTS

1. EXISTING 50' C.O.A. DRAINAGE & UTILITY EASEMENT (01-07-81, C17-174)
2. EXISTING 150' PUBLIC SERVICE COMPANY OF NEW MEXICO EASEMENT (04-01-75, MISC. 414, PG. 443 & 09-08-76, MISC. 495, PG. 479)
3. EXISTING 10' C.O.A. U.G. SEWER LINE EASEMENT (06-21-79, MISC. 698, PGS. 291-293 & 07-09-79, MISC. 702, PGS. 289-291)
4. EXISTING 20' C.O.A. PERMANENT UTILITY EASEMENT (05-16-78, MISC. 608, PGS. 359-364)
5. EXISTING 10' GAS EASEMENT (09-30-97, BK. 97-27, PGS. 113-119)
6. EXISTING 10' PNM & M.S.T.&T. EASEMENT (03-01-77, BK MISC. 522, PG. 404)
7. EXISTING 15' C.O.A. PUBLIC PEDESTRIAN AND NON-VEHICULAR ACCESS EASEMENT (12-29-98, BK. 98C, PG. 367)
8. EXISTING A.M.A.F.C.A. FLOOD PLAIN EASEMENT GRANTED BY PLAT (12-29-98, 98C-367) TO BE RELEASED UPON ISSUANCE OF A LETTER OF MAP REVISION (LOMR) BY THE FEDERAL EMERGENCY MANAGEMENT AGENCY (FEMA) AND UPON ISSUANCE OF A QUITCLAIM DEED FROM A.M.A.F.C.A. TO THE UNDERLYING PROPERTY OWNER.
9. 10' PUBLIC UTILITY EASEMENT GRANTED BY THIS PLAT.
10. 5' PRIVATE DRAINAGE EASEMENT GRANTED BY THIS PLAT.
11. 22' PRIVATE ACCESS, WATER, SANITARY SEWER, AND DRAINAGE EASEMENT GRANTED BY THIS PLAT.
12. 10' PNM & QWEST EASEMENT GRANTED BY THIS PLAT.

168PT1 DWG/dh 6/27/01

SCANNED BY PLANNING

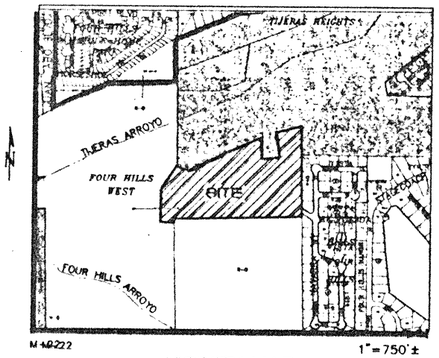

VICINITY MAP

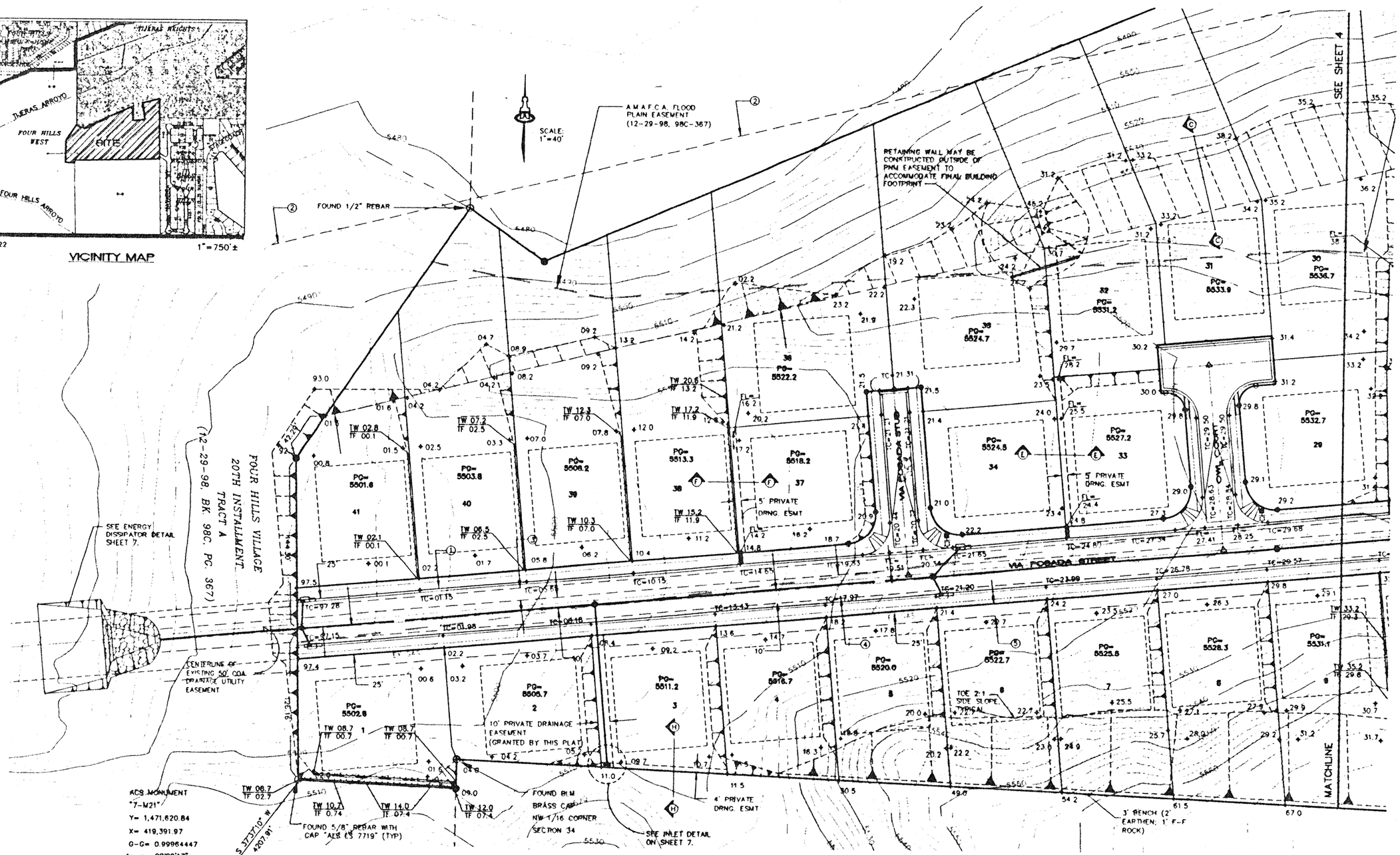

LEGEND

5500	EXISTING CONTOUR
◆52.0	PROPOSED SPOT ELEVATION
	FLOW ARROW
PG=5544.0	PAD GRADE ELEVATION
TC=48.0	TOP OF CURB ELEVATION
FL=45.68	FLOWLINE ELEVATION
	RETAINING WALL
	SIDEWALK CULVERT
TW=35.2 / TF=50.0	TOP OF WALL / TOP OF FOOTING ELEVATION
	1:1 SLOPE
	1-1/2:1 SLOPE
	2:1 SLOPE
	3:1 SLOPE

EASEMENTS

1. EXISTING 50' C.O.A. DRAINAGE & UTILITY EASEMENT (01-07-81, C17-174)
2. EXISTING 150' PUBLIC SERVICE COMPANY OF NEW MEXICO EASEMENT (04-01-75, MISC 414, PG 443 & 09-08-78, MISC 495, PG 479)
3. EXISTING 10' C.O.A. U.G. SEWER LINE EASEMENT (08-21-79, MISC 698, PGS 291-293 & 07-09-79, MISC. 702, PGS 289-291)
4. EXISTING 20' C.O.A. PERMANENT UTILITY EASEMENT (05-16-78, MISC 608, PGS 359-364)
5. EXISTING 10' GAS EASEMENT (09-30-97, BK. 97-27, PGS 113-119)
6. EXISTING 10' PNM & M.S.T.&T. EASEMENT (03-01-77, BK MISC 522 PG 404)
7. EXISTING 15' C.O.A. PUBLIC PEDESTRIAN AND NON-VEHICULAR ACCESS EASEMENT (12-29-98, BK. 98C, PG. 367)

AS-BUILT INFORMATION

CONTRACTOR | DATE
STAKED BY | DATE
INSPECTOR'S REPRESENTATIVE BY | DATE
FIELD VERIFICATION BY | DATE
CORRECTED BY | DATE
MICRO-FILM INFORMATION
RECORDED BY | DATE
NO.

BENCH MARKS

ACS BENCHMARK "5-M22", LOCATED 60.0' EAST OF MUNICIPAL LIMITS LINE, 77.9' SOUTHEAST OF POWER POLE SE #37 AND 186.0' NORTHWEST OF POWER POLE #60 A. STANDARD ACS BRASS DISK SET IN CONCRETE, STAMPED "5-M22, 1975 ACS" (NGVD 1929)
ELEVATION= 5594.518'

SURVEY INFORMATION

FIELD NOTES

1	ALS	3/94

ENGINEER'S SEAL

GENEVIEVE L. BONARI NEW MEXICO 15008 LICENSED PROFESSIONAL ENGINEER

REMARKS | BY | DATE

REVISIONS

DESIGN

DESIGNED BY GLD DATE 6/01
DRAWN BY RTH DATE 2/01
CHECKED BY FCA DATE 2/01

ISAACSON & ARFMAN, P.A.
Consulting Engineering Associates
128 Monroe Street N.E.
Albuquerque New Mexico
16BORD.DWG/h VIEW 1 07/03/01

CITY OF ALBUQUERQUE
PUBLIC WORKS DEPARTMENT
ENGINEERING GROUP

TITLE: FOUR HILLS VILLAGE--20TH INSTALLMENT
GRADING & DRAINAGE PLAN

Design Review Committee | City Engineer Approval | Last Design Update | Date | Date

City Project No. 5028 | Zone Map No. M-22 | Sheet 3 of 23

SCANNED BY PLANNING

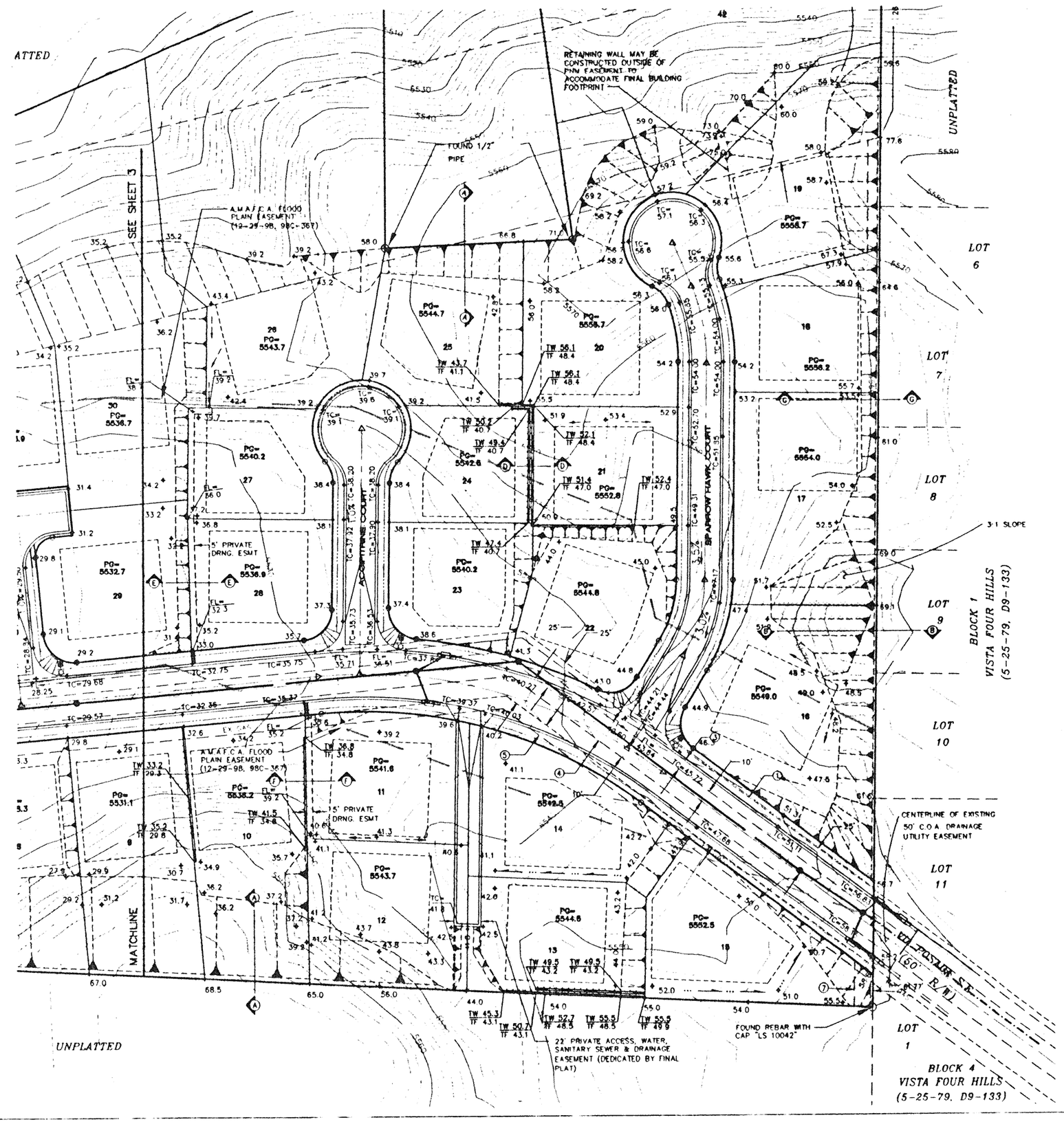

SCALE: 1"=40'

LEGEND

5500	EXISTING CONTOUR
◆52.0	PROPOSED SPOT ELEVATION
→	FLOW ARROW
PG=5544.0	PAD GRADE ELEVATION
TC=48.0	TOP OF CURB ELEVATION
FL=45.68	FLOWLINE ELEVATION
	RETAINING WALL
	SIDEWALK CULVERT
TW=35.2 / TF=50.0	TOP OF WALL / TOP OF FOOTING ELEVATION
	1:1 SLOPE
	1-1/2:1 SLOPE
	2:1 SLOPE
	3:1 SLOPE

EASEMENTS

1. EXISTING 50' C.O.A. DRAINAGE & UTILITY EASEMENT (01-07-81, C17-174)
2. EXISTING 150' PUBLIC SERVICE COMPANY OF NEW MEXICO EASEMENT (04-01-75, MISC. 414, PG. 443 & 09-08-78, MISC. 495, PG. 479)
3. EXISTING 10' C.O.A. U.G. SEWER LINE EASEMENT (06-21-79, MISC. 698, PGS. 291-293 & 07-09-79, MISC. 702, PGS. 289-291)
4. EXISTING 20' C.O.A. PERMANENT UTILITY EASEMENT (05-16-78, MISC. 608, PGS. 359-364)
5. EXISTING 10' GAS EASEMENT (09-30-97, BK. 97-27, PGS. 113-119)
6. EXISTING 10' PNM & M.S.T.&T. EASEMENT (03-01-77, BK MISC. 522, PG. 404)
7. EXISTING 15' C.O.A. PUBLIC PEDESTRIAN AND NON-VEHICULAR ACCESS EASEMENT (12-29-98, BK. 98C, PG. 367)

AS-BUILT INFORMATION

CONTRACTOR — WORK STAKED BY — DATE; PRELIMINARY ACCEPTANCE BY — DATE; FIELD VERIFICATION BY — DATE; DRAWINGS CORRECTED BY — DATE; MICRO-FILM INFORMATION — RECORDED BY — DATE; NO.

BENCH MARKS

ACS BENCHMARK "5-M22", LOCATED 60.0' EAST OF MUNICIPAL LIMITS LINE, 77.9' SOUTHEAST OF POWER POLE SE #37 AND 186.0' NORTHWEST OF POWER POLE #60 A STANDARD ACS BRASS DISK SET IN CONCRETE, STAMPED "5-M22, 1975 ACS" (NGVD 1929) ELEVATION= 5594.518'

SURVEY INFORMATION

FIELD NOTES

1	ALS	3/94

ENGINEER'S SEAL

GENEVIEVE L. BONART — NEW MEXICO — 15088 — 7/7/01

NO.	DATE	REMARKS	BY
		REVISIONS	
		DESIGN	

DESIGNED BY GLD — DATE 6/01
DRAWN BY RFH — DATE 2/01
CHECKED BY FCA — DATE 2/01

ISAACSON & ARFMAN, P.A.
Consulting Engineering Associates
128 Monroe Street N.E.
Albuquerque New Mexico
16BORD DWG#h VIEW 2 07/03/01

CITY OF ALBUQUERQUE
PUBLIC WORKS DEPARTMENT
ENGINEERING GROUP

TITLE: FOUR HILLS VILLAGE--20TH INSTALLMENT
GRADING & DRAINAGE PLAN

Design Review Committee — City Engineer Approval — Last Design Update — Mo./Day/Yr. — Mo./Day/Yr.

City Project No. 5038 — Zone Map No. M-22 — Sheet 4 Of 23

SCANNED BY PLANNING

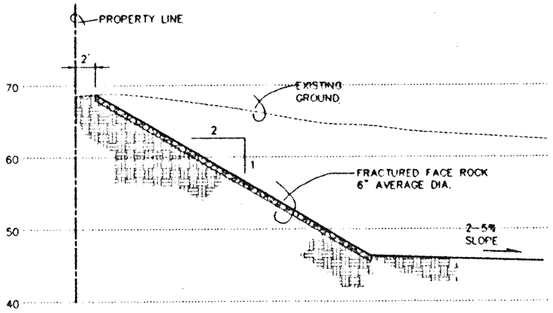

SECTION A-A

SCALE: 1"=10'

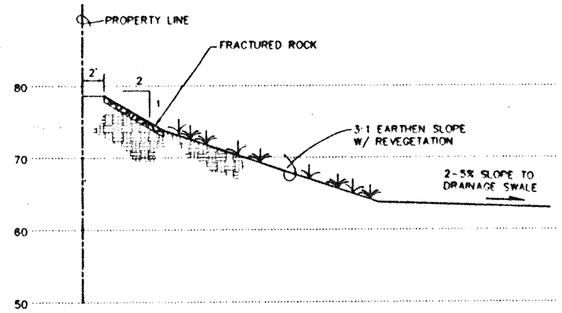

SECTION B-B

SCALE: 1"=10'

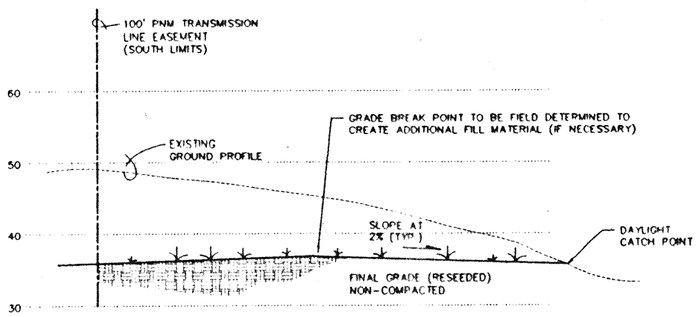

SECTION C-C

SCALE: 1"=10'

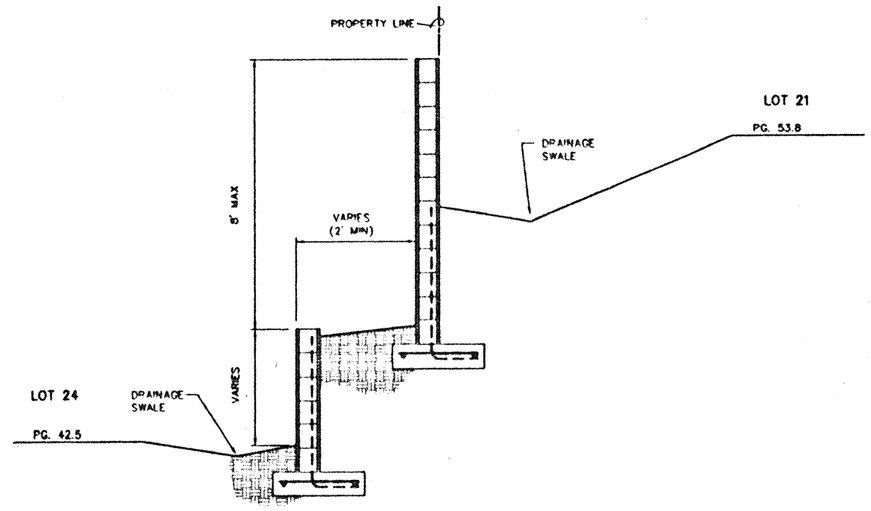

SECTION D-D
TWO-TIER RETAINING WALL

SCALE: 1"=5'-0"

EROSION CONTROL

1. THE CONTRACTOR SHALL ENSURE THAT NO SOIL ERODES FROM THE SITE INTO THE PUBLIC RIGHT-OF-WAY OR ONTO PRIVATE PROPERTY. THIS CAN BE ACHIEVED BY CONSTRUCTING EROSION CONTROL BERMS (AS DETAILED AT RIGHT) AS SHOWN ON THE PLAN AND WETTING THE SOIL TO KEEP IT FROM BLOWING.
2. THE CONTRACTOR SHALL SECURE "TOPSOIL DISTURBANCE PERMIT" FROM THE CITY ENVIRONMENTAL HEALTH DEPARTMENT PRIOR TO BEGINNING CONSTRUCTION. AN EXCAVATION PERMIT IS REQUIRED FOR ALL WORK WITHIN PUBLIC RIGHT-OF-WAY.
3. SEE GRADING NOTES.

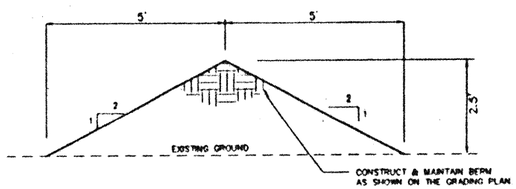

EROSION CONTROL BERM

SCALE: 1"=2'

AS-BUILT INFORMATION

CONTRACTOR

WORK STAKED BY | DATE
INSPECTOR'S ACCEPTANCE BY | DATE
FIELD VERIFICATION BY | DATE
DRAWINGS CORRECTED BY | DATE

MICRO-FILM INFORMATION

RECORDED BY | DATE

NO.

BENCH MARKS

ACS BENCHMARK "5-M22", LOCATED 60.0' EAST OF MUNICIPAL LIMITS LINE, 77.9' SOUTHEAST OF POWER POLE SE #37 AND 186.0' NORTHWEST OF POWER POLE #80 A STANDARD ACS BRASS DISK SET IN CONCRETE, STAMPED "5-M22, 1975 ACS" (NGVD 1929)
ELEVATION= 5594.518'

SURVEY INFORMATION

FIELD NOTES

1	ALS	3/94

ENGINEER'S SEAL

GENEVIEVE L. DONART NEW MEXICO 15088 PROFESSIONAL ENGINEER

NO.	DATE	REMARKS	BY
		REVISIONS	

DESIGN

DESIGNED BY GLD DATE 6/01
DRAWN BY RFH DATE 7/01
CHECKED BY FCA DATE 7/01

ISAACSON & ARFMAN, P.A.
Consulting Engineering Associates
128 Monroe Street N.E.
Albuquerque New Mexico
16900TL.DWG/A VIEW 1 07/06/01

CITY OF ALBUQUERQUE
PUBLIC WORKS DEPARTMENT
ENGINEERING GROUP

TITLE: FOUR HILLS VILLAGE--20TH INSTALLMENT
GRADING & DRAINAGE DETAILS

Design Review Committee: JUL 1 0 2001 — CHAIR, DRC REVIEW COMMITTEE
City Engineer Approval: JUL 13 2001 — CITY ENGINEER
Last Design Update | Mo./Day/Yr. | Mo./Day/Yr.

City Project No	Zone Map No	Sheet	Of
5038	M-22	5	23

SCANNED BY PLANNING

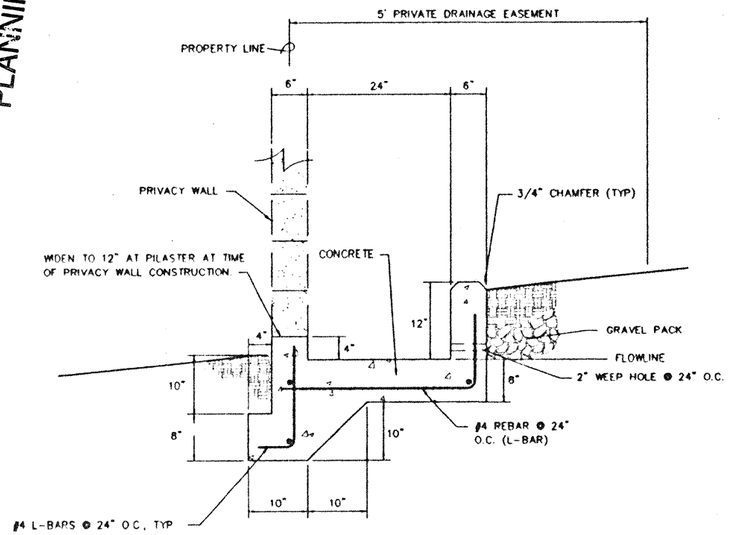

SECTION E-E
BACKYARD RUNDOWN AT GARDEN WALL

SCALE 1"=1'-0"

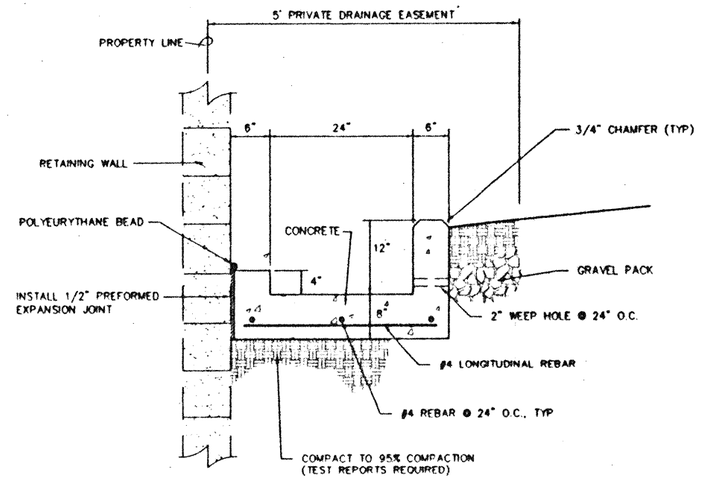

SECTION F-F
BACKYARD RUNDOWN AT RETAINING WALL

SCALE 1"=1'-0"

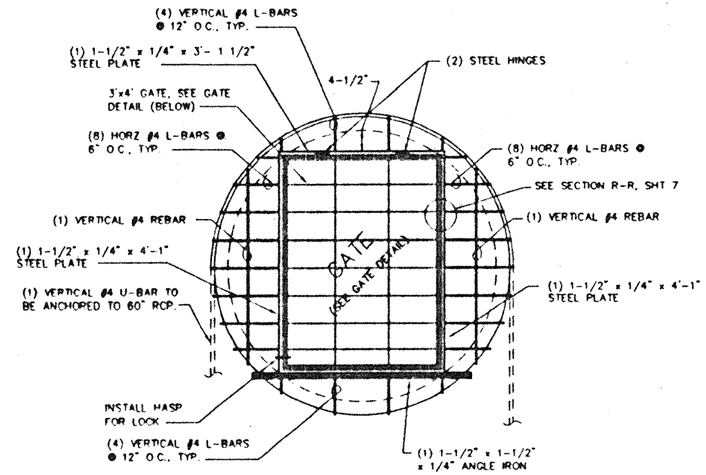

NOTES

1. WELD ALL REBAR AND STEEL CROSSINGS AND/OR CONNECTIONS PER INDUSTRY STANDARDS
2. PAINT EXPOSED REBAR AND STEEL WITH RUST-RESISTANT PAINT
3. CONTRACTOR SHALL PROVIDE THE ENGINEER WITH SHOP DRAWING

TEMPORARY SAFETY SCREEN W/ SERVICE GATE DETAIL

NTS

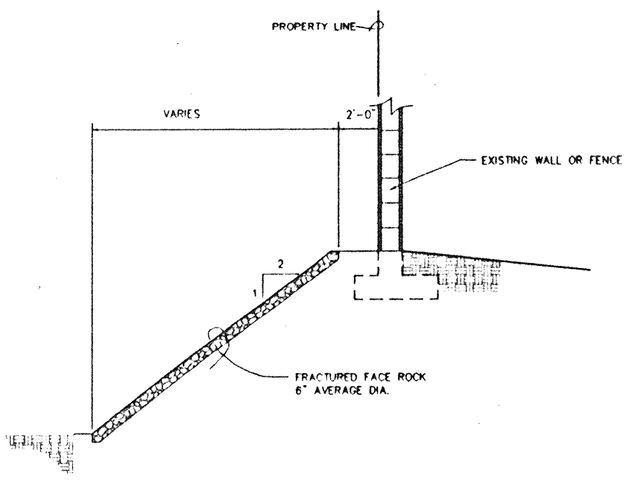

SECTION G-G
2:1 ARMORED SLOPE

SCALE 1"=5'-0"

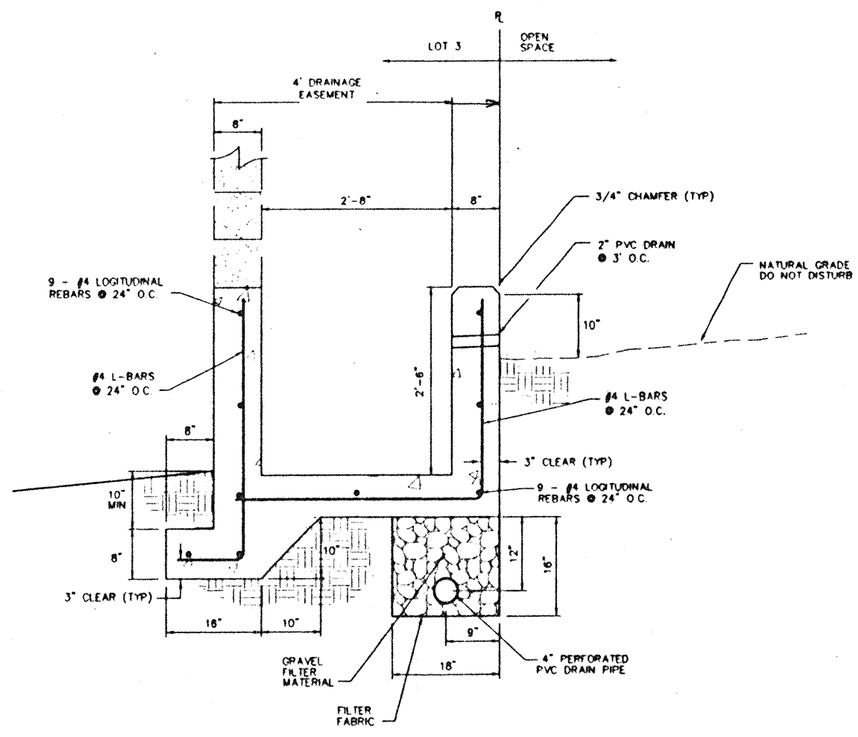

SECTION H-H
CONCRETE RUNDOWN AT LOT 3

SCALE 1"=1'-0"

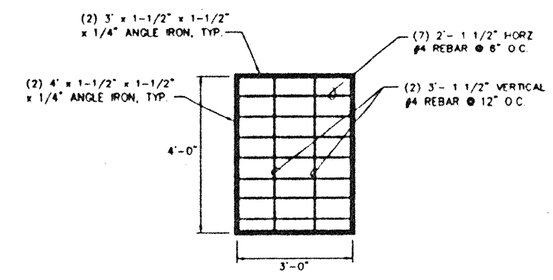

GATE DETAIL

NTS

AS-BUILT INFORMATION
CONTRACTOR
WORK STAKED BY / INSPECTED BY / ACCEPTANCE BY / FIELD VERIFICATION BY / DRAWINGS CORRECTED BY — DATE
MICRO-FILM INFORMATION
RECORDED BY — DATE
NO.

BENCH MARKS
ACS BENCHMARK "5-M22", LOCATED 60.0' EAST OF MUNICIPAL LIMITS LINE, 77.9' SOUTHEAST OF POWER POLE SE #37 AND 186.0' NORTHWEST OF POWER POLE #60. A STANDARD ACS BRASS DISK SET IN CONCRETE, STAMPED "5-M22, 1975 ACS" (NGVD 1929)
ELEVATION= 5594.518'

SURVEY INFORMATION
FIELD NOTES
1 — ALS — 3/94

ENGINEER'S SEAL
GENEVIEVE L. BONAR — NEW MEXICO — 15088

NO.	DATE	REMARKS	BY
		REVISIONS	

DESIGN
DESIGNED BY GLD — DATE 6/01
DRAWN BY RFH — DATE 2/01
CHECKED BY F.C.A. — DATE 2/01

ISAACSON & ARFMAN, P.A.
Consulting Engineering Associates
128 Monroe Street N.E.
Albuquerque New Mexico
1658DTL.DWG.sh VIEW 2 07/09/01

CITY OF ALBUQUERQUE
PUBLIC WORKS DEPARTMENT
ENGINEERING GROUP

TITLE: FOUR HILLS VILLAGE--20TH INSTALLMENT
GRADING & DRAINAGE DETAILS

Design Review Committee — JUL 10 2001 — DRC Chairperson
City Engineer Approval — JUL 13 2001 — CITY ENGINEER
Last Design Update — Mo./Day/Yr.

City Project No. 5038 | Zone Map No. M-22 | Sheet 6 Of 23

SCANNED BY PLANNING

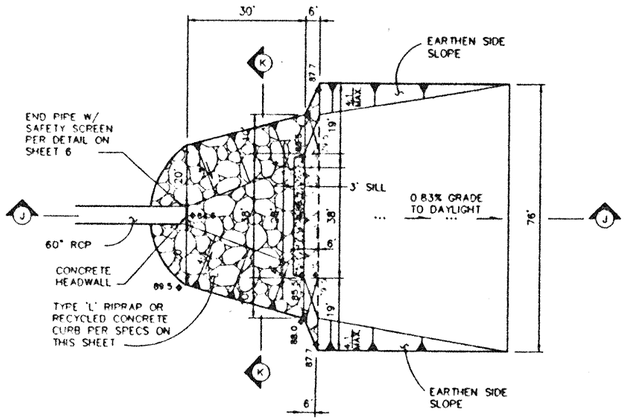

RIPRAP ENERGY DISSIPATOR DETAIL
SCALE: 1"=20'

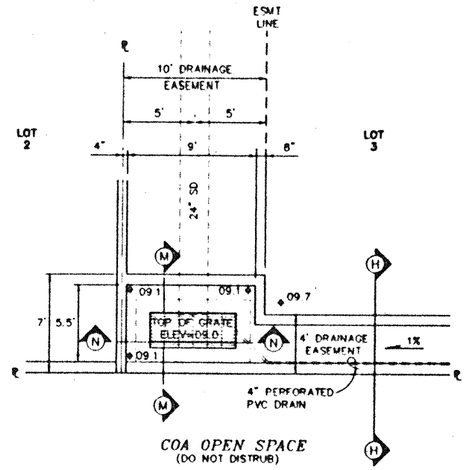

TYPE 'D' DOUBLE GRATE INLET DETAIL
SCALE: 1"=5

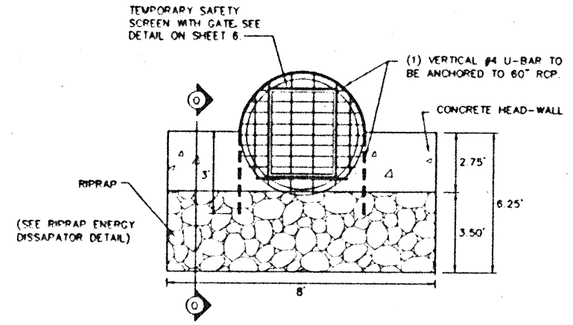

SECTION P-P
NTS

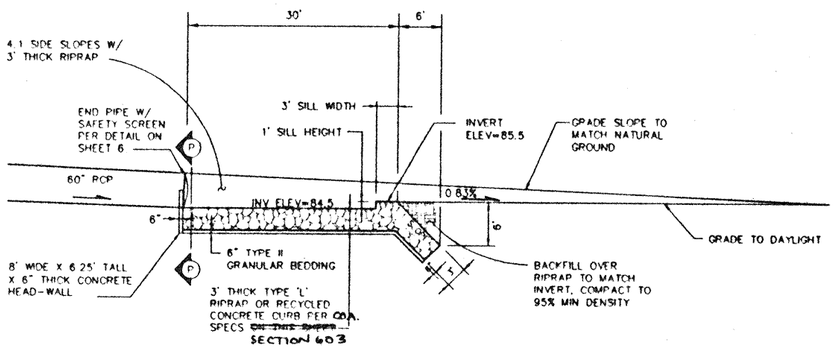

SECTION J-J
RIPRAP ENERGY DISSIPATOR
SCALE: 1"=10'

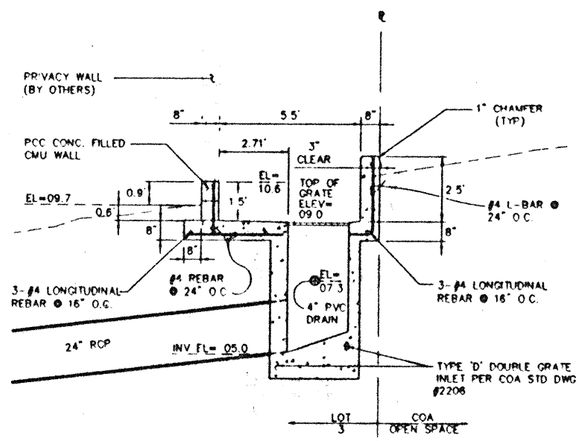

SECTION M-M
SCALE: 1"=2.5

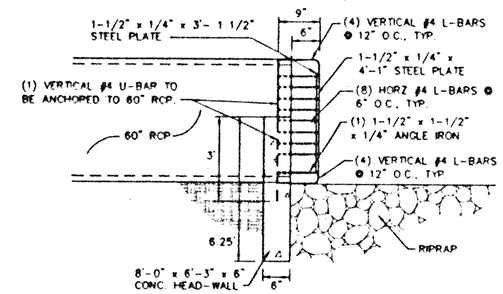

SECTION Q-Q
NTS

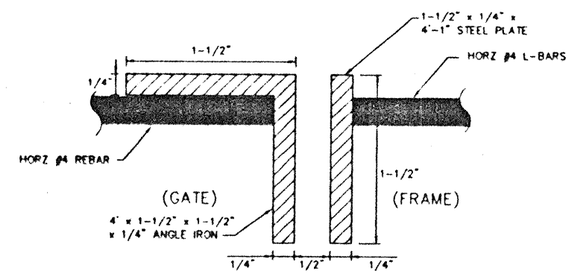

SECTION R-R
NTS

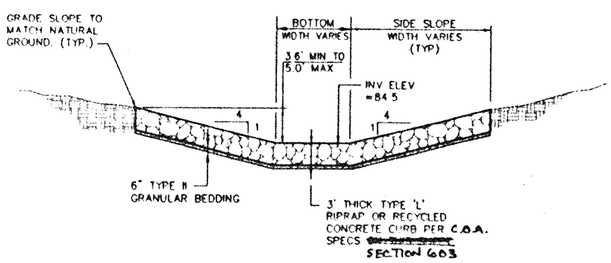

SECTION K-K
SCALE: 1"=10'

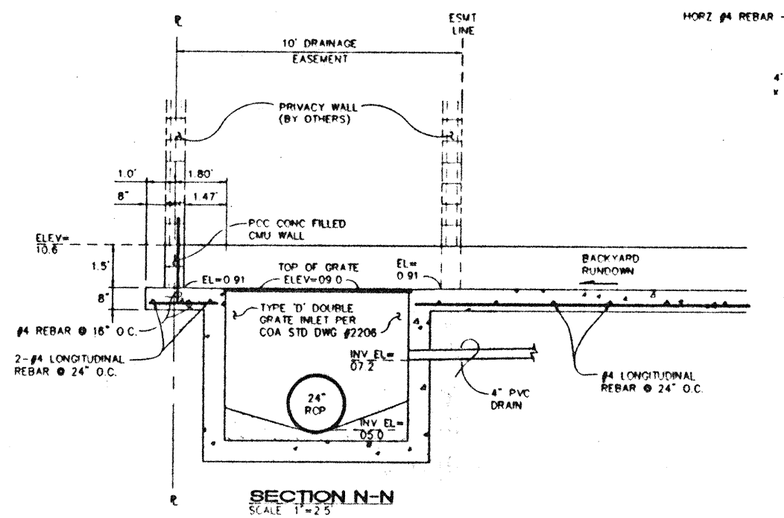

SECTION N-N
SCALE: 1"=2.5

AS-BUILT INFORMATION

CONTRACTOR
WORK STAKED BY
INSPECTED BY
ACCEPTANCE BY
SUPERVISION BY
DATE
CORRECTIONS BY
DATE
MICRO-FILM INFORMATION
RECORDED BY
DATE
NO.

BENCH MARKS
ACS BENCHMARK "5-M22", LOCATED 60.0' EAST OF MUNICIPAL LIMITS LINE, 77.9' SOUTHEAST OF POWER POLE SE #37 AND 188.0' NORTHWEST OF POWER POLE #60 A STANDARD ACS BRASS DISK SET IN CONCRETE, STAMPED "5-M22, 1975 ACS" (NGVD 1929)
ELEVATION= 5594.518'

SURVEY INFORMATION
FIELD NOTES
1 ALS 3/94

ENGINEER'S SEAL
GENEVIEVE L. ROMAN
NEW MEXICO
19088
7/9/01

NO.	DATE	REMARKS	BY
		REVISIONS	
		DESIGN	

DESIGNED BY GLD DATE 6/01
DRAWN BY RFH DATE 2/01
CHECKED BY FCA DATE 2/01

ISAACSON & ARFMAN, P.A.
Consulting Engineering Associates
128 Monroe Street N.E.
Albuquerque New Mexico
16903TLDWG.sh VIEW 3 07/09/01

CITY OF ALBUQUERQUE
PUBLIC WORKS DEPARTMENT
ENGINEERING GROUP

TITLE: FOUR HILLS VILLAGE--20TH INSTALLMENT
GRADING & DRAINAGE DETAILS

Design Review Committee: JUL 10 2001 — REVIEW COMMITTEE
City Engineer Approval: JUL 13 2001 — CITY ENGINEER
Last Design Update
No./Date/Int.
No./Date/Int.

City Project No 5038 | Zone Map No M-22 | Sheet 7 Of 23

SCANNED BY PLANNING

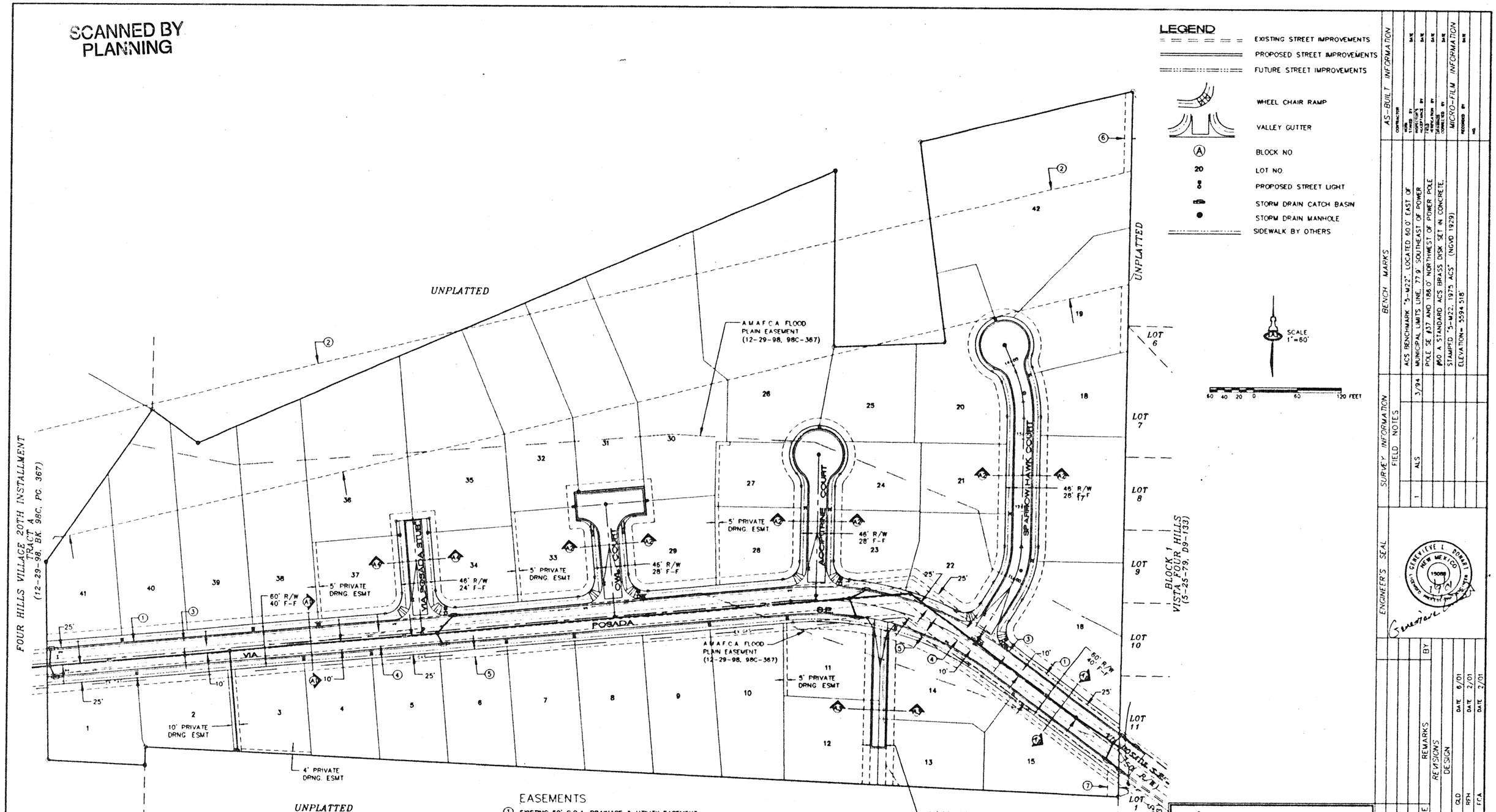

EASEMENTS

1. EXISTING 50' C.O.A. DRAINAGE & UTILITY EASEMENT (01-07-81, C17-174)
2. EXISTING 150' PUBLIC SERVICE COMPANY OF NEW MEXICO EASEMENT (04-01-75, MISC. 414, PG. 443 & 09-08-76, MISC. 495, PG. 479)
3. EXISTING 10' C.O.A. U.G. SEWER LINE EASEMENT (06-21-79, MISC. 698, PGS. 291-293 & 07-09-79, MISC. 702, PGS. 289-291)
4. EXISTING 20' C.O.A. PERMANENT UTILITY EASEMENT (05-16-78, MISC. 608, PGS. 359-364)
5. EXISTING 10' GAS EASEMENT (09-30-97, BK. 97-27, PGS. 113-119)
6. EXISTING 10' PNM & M.S.T.&T. EASEMENT (03-01-77, BK MISC. 522, PG. 404)
7. EXISTING 15' C.O.A. PUBLIC PEDESTRIAN AND NON-VEHICULAR ACCESS EASEMENT (12-29-98, BK. 98C, PG. 367)

AS-BUILT INFORMATION
CONTRACTOR
WORK STAKED BY — DATE
INSPECTOR'S ACCEPTANCE — DATE
FIELD VERIFICATION BY — DATE
DRAWINGS CORRECTED BY — DATE
MICRO-FILM INFORMATION
RECORDED BY — DATE
NO.

BENCH MARKS
ACS BENCHMARK "5-M22", LOCATED 60.0' EAST OF MUNICIPAL LIMITS LINE, 77.9' SOUTHEAST OF POWER POLE SE #37 AND 186.0' NORTHWEST OF POWER POLE #60. A STANDARD ACS BRASS DISK SET IN CONCRETE, STAMPED "5-M22, 1975 ACS". (NGVD 1929)
ELEVATION= 5594.518'

SURVEY INFORMATION
FIELD NOTES

NO.	DATE	REMARKS	BY
1	3/94		ALS

ENGINEER'S SEAL
GENEVIEVE L. ROMAN, NEW MEXICO, 15008, 19 C1, REGISTERED PROFESSIONAL ENGINEER

REVISIONS
DESIGN
DESIGNED BY GLD DATE 6/01
DRAWN BY RFH DATE 2/01
CHECKED BY FCA DATE 2/01

ISAACSON & ARFMAN, P.A.
Consulting Engineering Associates
128 Monroe Street N.E.
Albuquerque New Mexico
16SPUSTR DWG.R 06/26/01

CITY OF ALBUQUERQUE
PUBLIC WORKS DEPARTMENT
ENGINEERING GROUP

TITLE: FOUR HILLS VILLAGE--20TH INSTALLMENT
MASTER PAVING & STORM DRAIN PLAN

Design Review Committee — JUL 1 — REVIEW COMMITTEE
City Engineer Approval — JUL 11 2001 — CITY ENGINEER
Last Design Update — Mo./Day/Yr. — Mo./Day/Yr.

City Project No. 5038 | Zone Map No. M-22 | Sheet 8 Of 23

SCANNED BY
PLANNING

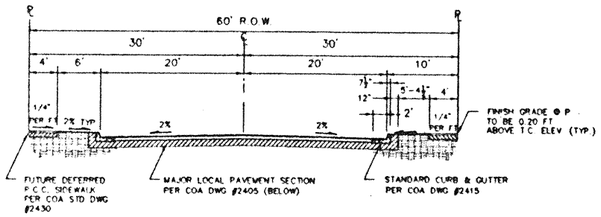

SECTION A1-A1

60' VIA POSADA RESIDENTIAL STREET SECTION

1"=10'

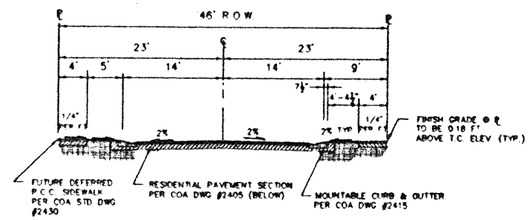

SECTION A2-A2

TYPICAL 46' R.O.W. RESIDENTIAL STREET SECTION

1"=10'

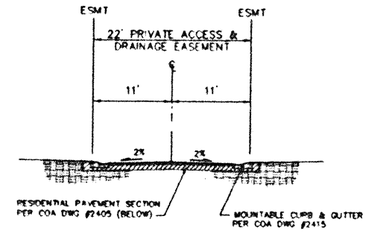

SECTION A3-A3

22' ACCESS DRIVEWAY FOR LOTS 12 AND 13

1"=10'

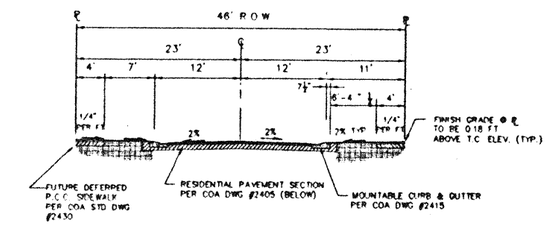

SECTION A4-A4

46' R.O.W. RESIDENTIAL STREET SECTION

1"=10'

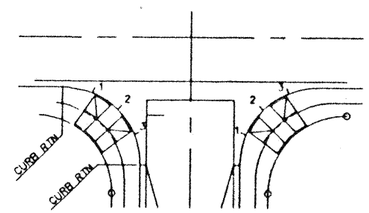

NOTE:
QUARTER POINT GRADES ARE REFERENCED AS 1, 2 & 3 ALONG THE FACE OF CURB IN A CLOCKWISE DIRECTION.

QUARTER POINT DETAIL

NTS

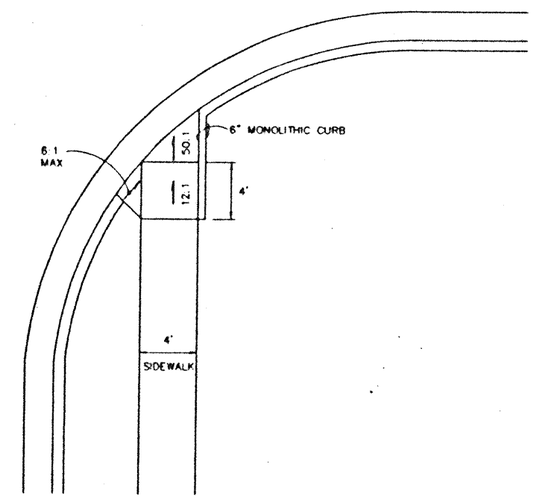

WHEELCHAIR RAMP DETAIL

SCALE: 1"=5'

NOTE: **

CONTRACTOR SHALL BE RESPONSIBLE FOR UPGRADING ANY SOIL WHERE THE R-VALUE IS LESS THAN 50. TO A DEPTH OF 2'.

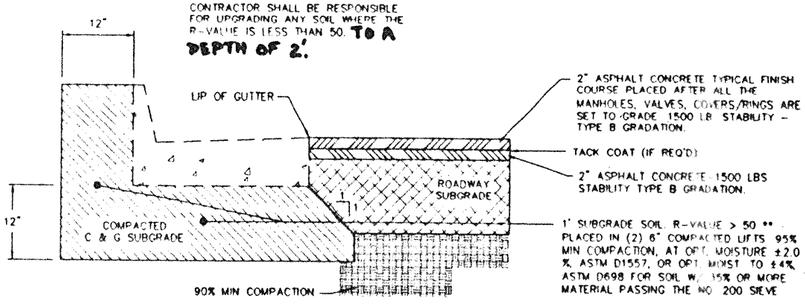

MAJOR LOCAL PAVING SECTION

SCALE: 1"= 1'-0" (PER COA STD. DWG. No. 2405)

NOTE: **

CONTRACTOR SHALL BE RESPONSIBLE FOR UPGRADING ANY SOIL WHERE THE R-VALUE IS LESS THAN 50 TO A DEPTH OF 2'.

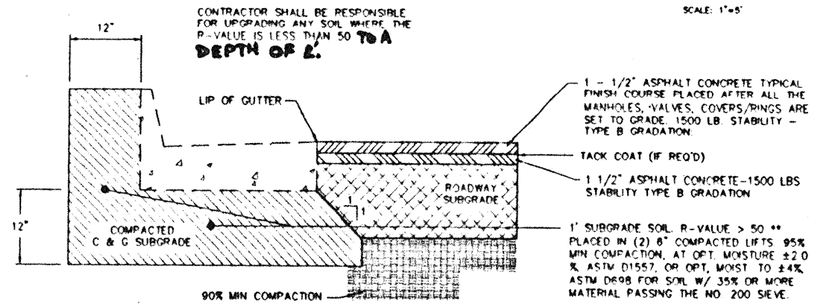

RESIDENTIAL PAVING SECTION

SCALE: 1"= 1'-0" (PER COA STD. DWG. No. 2405)

AS-BUILT INFORMATION

CONTRACTOR
WORK STAKED BY
INSPECTOR'S FIELD CHANGES BY DATE
VERIFICATION BY DATE
DRAWINGS CORRECTED BY DATE

MICRO-FILM INFORMATION

RECORDED BY DATE

NO.

BENCH MARKS

ACS BENCHMARK "5-M22", LOCATED 50.0' EAST OF MUNICIPAL LIMITS LINE, 77.9' SOUTHEAST OF POWER POLE SE #37 AND 186.0' NORTHWEST OF POWER POLE #60 A STANDARD ACS BRASS DISK SET IN CONCRETE, STAMPED "5-M22, 1975 ACS" (NGVD 1929)
ELEVATION= 5594.518'

SURVEY INFORMATION

FIELD NOTES

1 ALS 3/94

ENGINEER'S SEAL

GENEVIEVE L. DONATI
NEW MEXICO
15088
LICENSED PROFESSIONAL ENGINEER

7/9/01

REMARKS BY DATE NO.

REVISIONS

DESIGN

DESIGNED BY GLD DATE 6/01
DRAWN BY RFH DATE 7/01
CHECKED BY FCA DATE 7/01

ISAACSON & ARFMAN, P.A.
Consulting Engineering Associates
128 Monroe Street N.E.
Albuquerque New Mexico
168F VOTL DWGnov 07/10/01

CITY OF ALBUQUERQUE
PUBLIC WORKS DEPARTMENT
ENGINEERING GROUP

TITLE: FOUR HILLS VILLAGE--20TH INSTALLMENT

PAVING DETAILS & SECTIONS

Design Review Committee
JUL 1 0
REVIEW COMMITTEE

City Engineer Approval
JUL 13 2001
CITY ENGINEER

Last Design Update

Mo./Day/Yr	Mo./Day/Yr

City Project No. 5038 | Zone Map No. M-22 | Sheet 9 of 23

SCANNED BY PLANNING

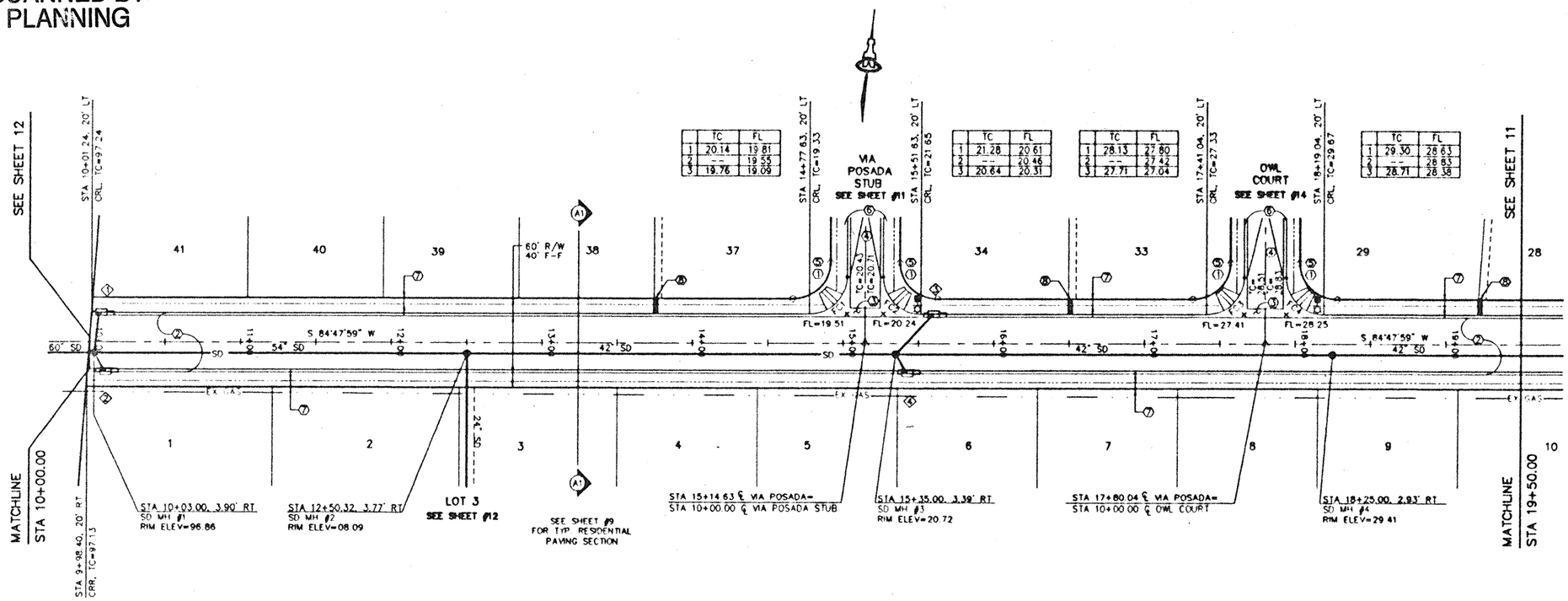

KEYED CONSTRUCTION NOTES

1. CONSTRUCT HANDICAP RAMP PER COA STD DWG #2441. CASE II
2. STANDARD CURB & GUTTER PER COA STD DWG #2415.
3. CONSTRUCT PCC VALLEY GUTTER 6' WIDE, 1 1/2" INVERT PER COA STD DWG #2420.
4. CROWN TO NO CROWN TRANSITION 50' MIN. LENGTH PER COA STD DWG #2401.
5. TRANSITION FROM MOUNTABLE TO STANDARD CURB PER COA STD DWG #2418.
6. MOUNTABLE CURB & GUTTER PER COA TD DWG #2415
7. 4' WIDE, 4" THICK FUTURE (DEFERRED) PCC CONCRETE SIDEWALK PER COA STD DWG #2430.
8. SIDEWALK CULVERT PER COA STD DWG #2236

FACE OF CURB CURVE TABLE

CURVE	LENGTH	RADIUS	DELTA
FC1	39.27	25.00	90°00'00"
FC2	39.27	25.00	90°00'00"
FC3	39.27	25.00	90°00'00"
FC4	39.27	25.00	90°00'00"

STORM DRAIN INLET INFORMATION

INLET NO ◇	INLET TYPE	STATION* & OFFSET	TOP GR EL	INV OUT
1	TYPE A	10+05.99, 20' LT	96.51	91.10
2	TYPE A	10+08.89, 20' RT	96.62	91.10
3	TYPE A	15+58.38, 20' LT	20.96	16.00
4	TYPE A	15+41.01, 20' RT	20.53	16.00

SCALES: 1"=40' HOR. 1"=10' VERT.

* STATIONING IS TO MIDPOINT OF GRATE @ FACE OF CURB

CONNECTOR PIPE INFORMATION

FROM INLET NO ◇	Q (CFS)	DIA (IN)	LENGTH (FT)	SLOPE (FT/FT)
1	10.45	18"	22.11	0.060
2	10.45	18"	15.28'	0.087
3	13.95	18"	31.70	0.092
4	13.95	18"	15.84'	0.184

VIA POSADA

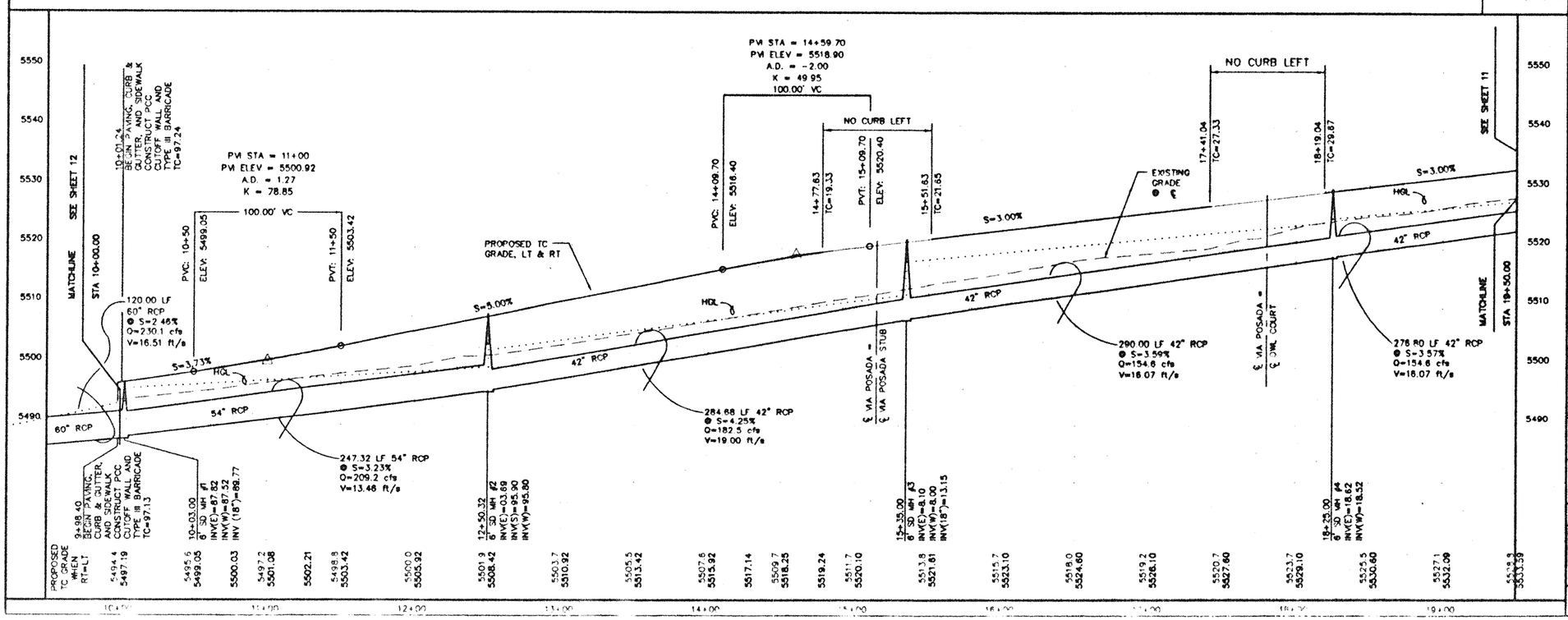

ISAACSON & ARFMAN, P.A.
Consulting Engineering Associates
128 Monroe Street N.E.
Albuquerque New Mexico
168PVI.DWG/h VEW 1 07/03/01

CITY OF ALBUQUERQUE
PUBLIC WORKS DEPARTMENT
ENGINEERING GROUP

TITLE: FOUR HILLS VILLAGE--20TH INSTALLMENT
VIA POSADA
STA 10+00.00 TO STA 19+50.00
PAVING & STORM DRAIN PLAN & PROFILE

Design Review Committee | City Engineer Approval | Last Design Update | Mo./Day/Yr | Mo./Day/Yr

City Project No 5038 | Zone Map No M-22 | Sheet 10 Of 23

AS-BUILT INFORMATION
CONTRACTOR | STAKED BY | DATE | INSPECTOR'S ACCEPTANCE BY | DATE | FIELD VERIFICATION BY | DATE | DRAWINGS CORRECTED BY | DATE
MICRO-FILM INFORMATION
RECORDED BY | DATE | NO.

BENCH MARKS
ACS BENCHMARK "5-M22", LOCATED 80.0' EAST OF MUNICIPAL LIMITS LINE, 77.9' SOUTHEAST OF POWER POLE SE #37 AND 186.0' NORTHWEST OF POWER POLE #60 A STANDARD ACS BRASS DISK SET IN CONCRETE, STAMPED "5-M22, 1975 ACS" (NGVD 1929) ELEVATION= 5594.518'

SURVEY INFORMATION
FIELD NOTES
3/94 ALS
1

NO.	DATE	REMARKS	BY
		REVISIONS	

DESIGNED BY GLD DATE 6/01
DRAWN BY RFH DATE 2/01
CHECKED BY F.C.A. DATE 2/01

ENGINEER'S SEAL
GENEVIEVE L. DONATI NEW MEXICO 15088 LICENSED PROFESSIONAL ENGINEER 7/9/01

SCANNED BY PLANNING

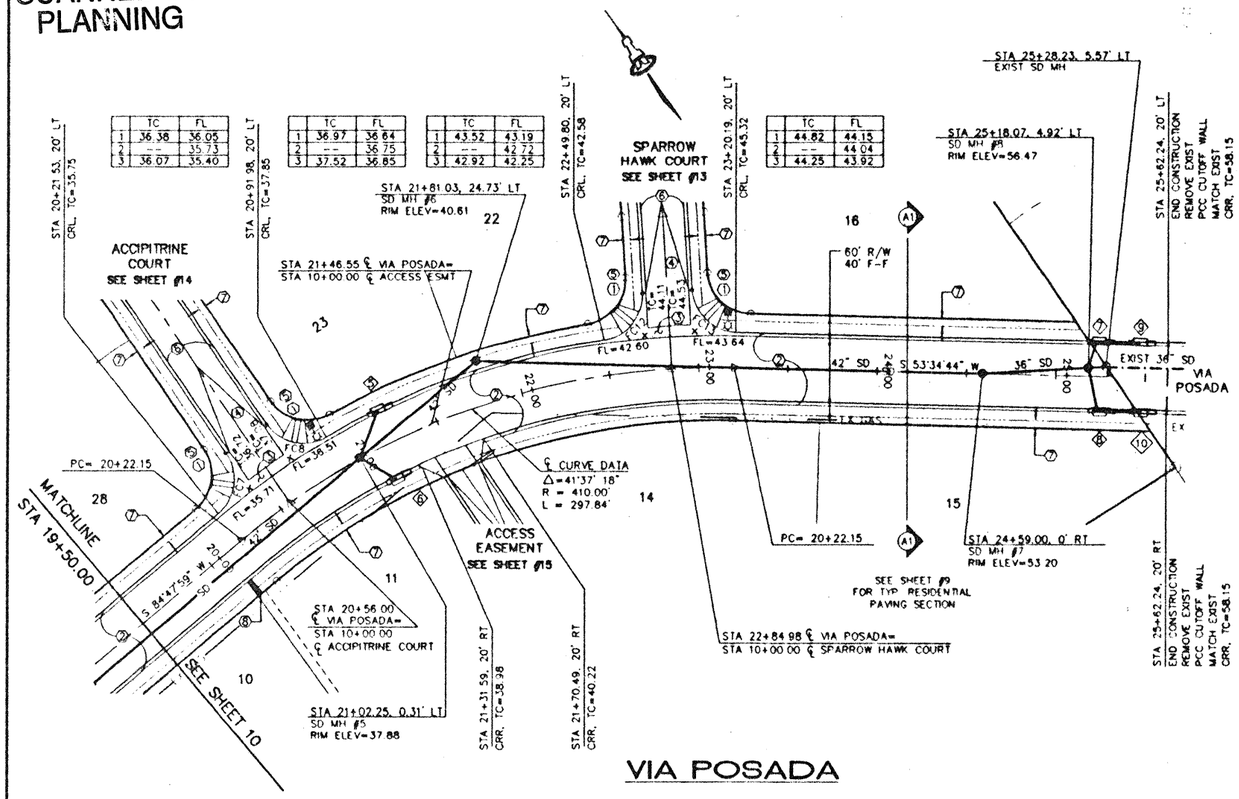

VIA POSADA

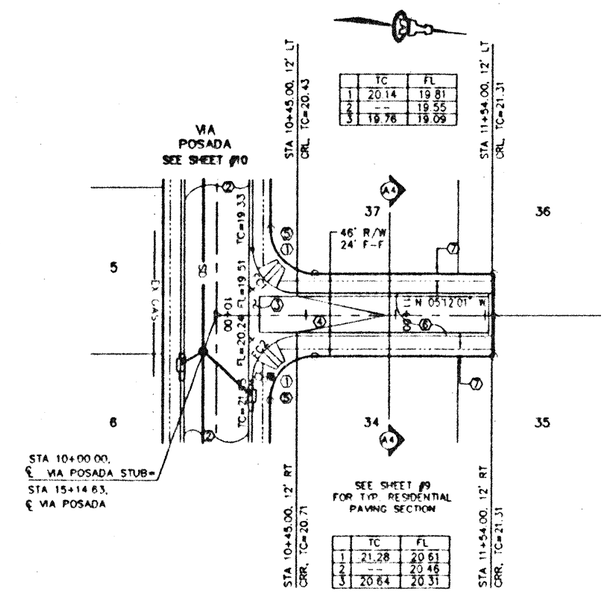

VIA POSADA STUB

	TC	FL
1	36.38	36.05
2	--	35.73
3	36.07	35.40

	TC	FL
1	36.97	36.64
2	--	36.75
3	37.52	36.85

	TC	FL
1	43.52	43.19
2	--	42.72
3	42.92	42.25

	TC	FL
1	44.82	44.15
2	--	44.04
3	44.25	43.92

	TC	FL
1	20.14	19.81
2	--	19.55
3	19.76	19.09

	TC	FL
1	21.28	20.61
2	--	20.46
3	20.64	20.31

KEYED CONSTRUCTION NOTES

1. CONSTRUCT HANDICAP RAMP PER COA STD DWG #2441.
2. STANDARD CURB & GUTTER PER COA STD DWG #2415.
3. CONSTRUCT PCC VALLEY GUTTER 6' WIDE, 1 1/2" INVERT PER COA STD DWG #2420.
4. CROWN TO NO CROWN TRANSITION 50' MIN. LENGTH PER COA STD DWG #2401.
5. TRANSITION FROM MOUNTABLE TO STANDARD CURB PER COA STD DWG #2418.
6. MOUNTABLE CURB & GUTTER PER COA TD DWG #2415.
7. 4' WIDE, 4" THICK PCC CONCRETE SIDEWALK FUTURE (DEFERRED) PER COA STD DWG #2430.
8. SIDEWALK CULVERT PER COA STD DWG #2236

FACE OF CURB CURVE TABLE

CURVE	LENGTH	RADIUS	DELTA
FC1	39.27	25.00	90°00'00"
FC2	39.27	25.00	90°00'00"
FC7	36.70	25.00	84°07'10"
FC8	37.58	25.00	86°07'19"
FC12	37.12	25.00	85°04.59"
FC12	37.14	25.00	85°06.32"

STORM DRAIN INLET INFORMATION

INLET NO ◇	INLET TYPE	STATION* & OFFSET	TOP GR. EL.	INV. OUT
5	TYPE A	21+21.53, 20' LT	37.83	33.80
6	TYPE A	21+13.87, 20' RT	37.60	32.80
7	TYPE A	25+22.06, 20' LT	56.08	52.00
8	TYPE A	25+23.44, 20' RT	56.62	52.00
9	TYPE A	25+45.06, 20' LT	57.14	53.00
10	TYPE A	25+46.44, 20' RT	57.20	53.00

*STATIONING IS TO MIDPOINT OF GRATE ● FACE OF CURB

SCALES:
1"=40' HOR.
1"=10' VERT.

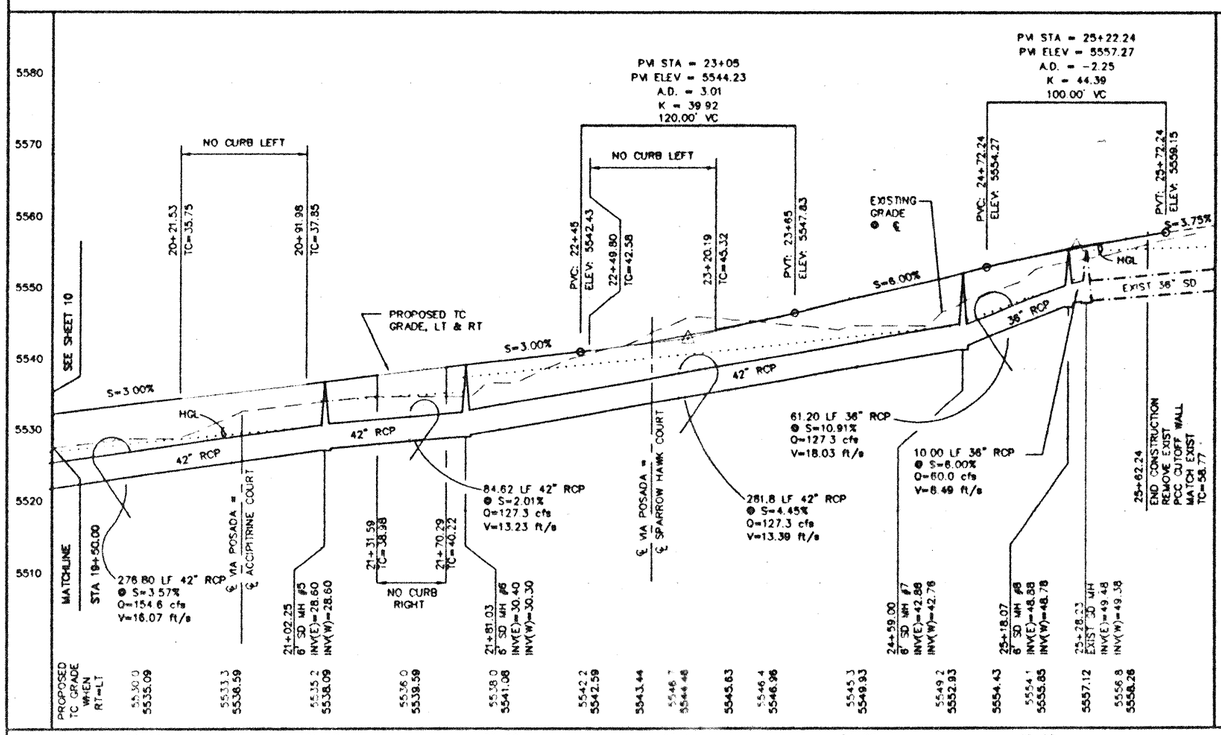

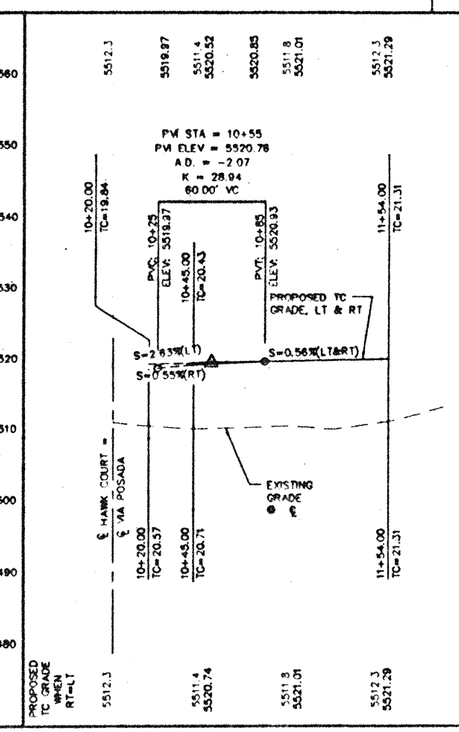

CONNECTOR PIPE INFORMATION

FROM INLET NO ◇	Q (CFS)	DIA. (IN)	LENGTH (FT)	SLOPE (FT/FT)
5	13.65	18"	26.47'	0.0630
6	13.65	18"	21.57'	0.0370
7	33.65	24"	25.15'	0.1041
8	33.65	24"	14.15'	0.1852
9	33.65	18"	20'	0.050
10	33.65	18"	20'	0.050

ISAACSON & ARFMAN, P.A.
Consulting Engineering Associates
128 Monroe Street N.E.
Albuquerque New Mexico
168PVI.DWG/th VIEW 2 07/03/01

CITY OF ALBUQUERQUE
PUBLIC WORKS DEPARTMENT
ENGINEERING GROUP

TITLE: FOUR HILLS VILLAGE--20TH INSTALLMENT
VIA POSADA & VIA POSADA STUB
STA 19+50.00 TO END STA 10+00.00 TO END
PAVING & STORM DRAIN PLAN & PROFILE

Design Review Committee | City Engineer Approval | JUL 13 2001 CITY ENGINEER | Last Design Update | Mo./Day/Yr. | Mo./Day/Yr.

City Project No 5038 | Zone Map No M-22 | Sheet 11 Of 23

AS-BUILT INFORMATION
CONTRACTOR | WORK STAKED BY | INSPECTOR'S FIELD CHANGE BY | DATE | FINAL INSPECTION BY | DATE | CORRECTIONS COMPLETED BY | DATE
MICRO-FILM INFORMATION
RECORDED BY | DATE | NO.

BENCH MARKS
ACS BENCHMARK "5-M22", LOCATED 60.0' EAST OF MUNICIPAL LIMITS LINE, 77.9' SOUTHEAST OF POWER POLE SE #37 AND 186.0' NORTHWEST OF POWER POLE #60 A STANDARD ACS BRASS DISK SET IN CONCRETE, STAMPED "5-M22, 1975 ACS" (NGVD 1929) ELEVATION= 5594.518'

SURVEY INFORMATION
FIELD NOTES
ALS 1 3/94

ENGINEER'S SEAL
GENEVIEVE L. BONART NEW MEXICO 19088 REGISTERED PROFESSIONAL ENGINEER 7/9/01

NO.	DATE	REMARKS REVISIONS DESIGN	BY

DESIGNED BY GLD DATE 6/01
DRAWN BY RTH DATE 2/01
CHECKED BY FCA DATE 2/01

SCANNED BY PLANNING

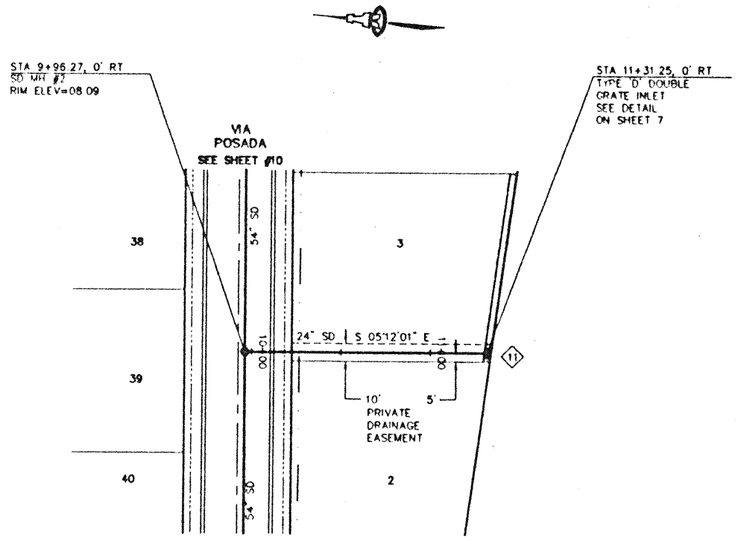

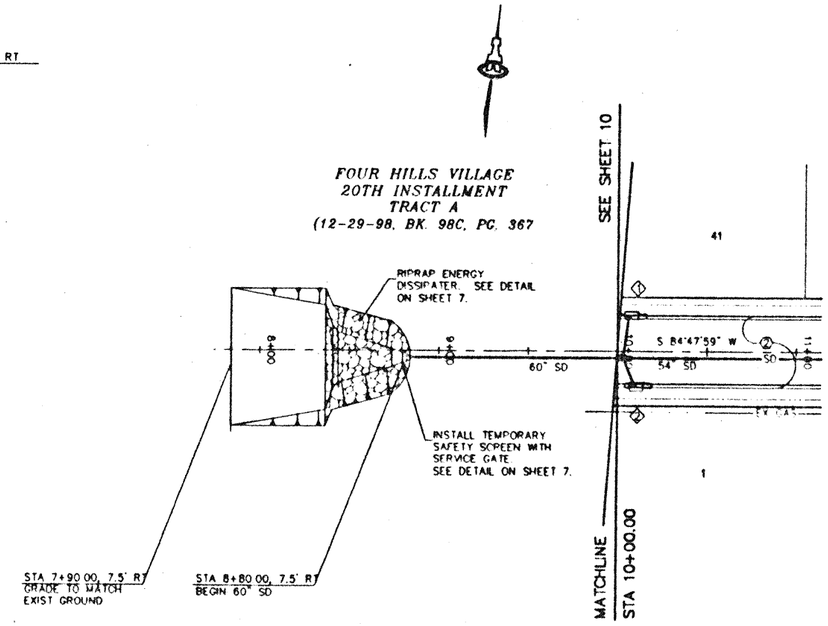

LOT 3

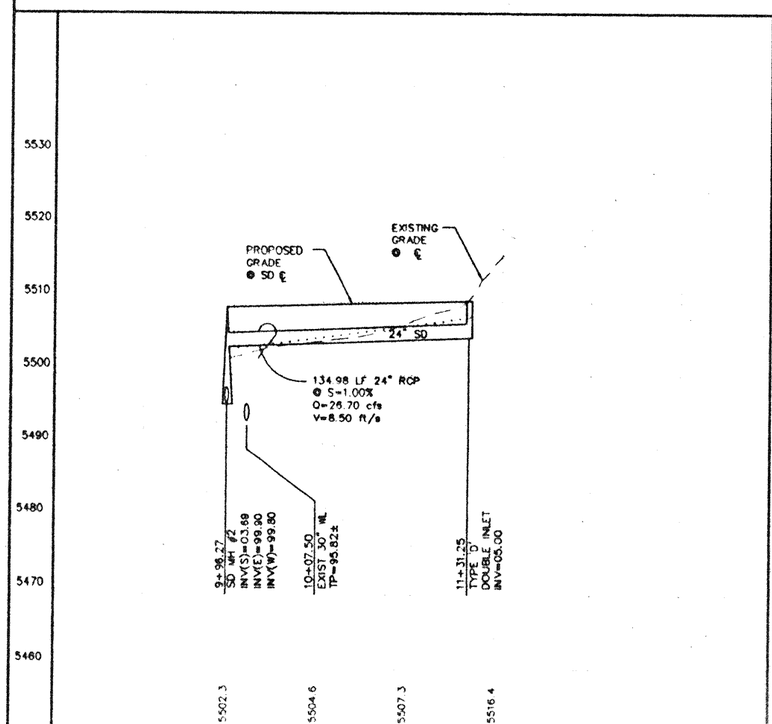

VIA POSADA

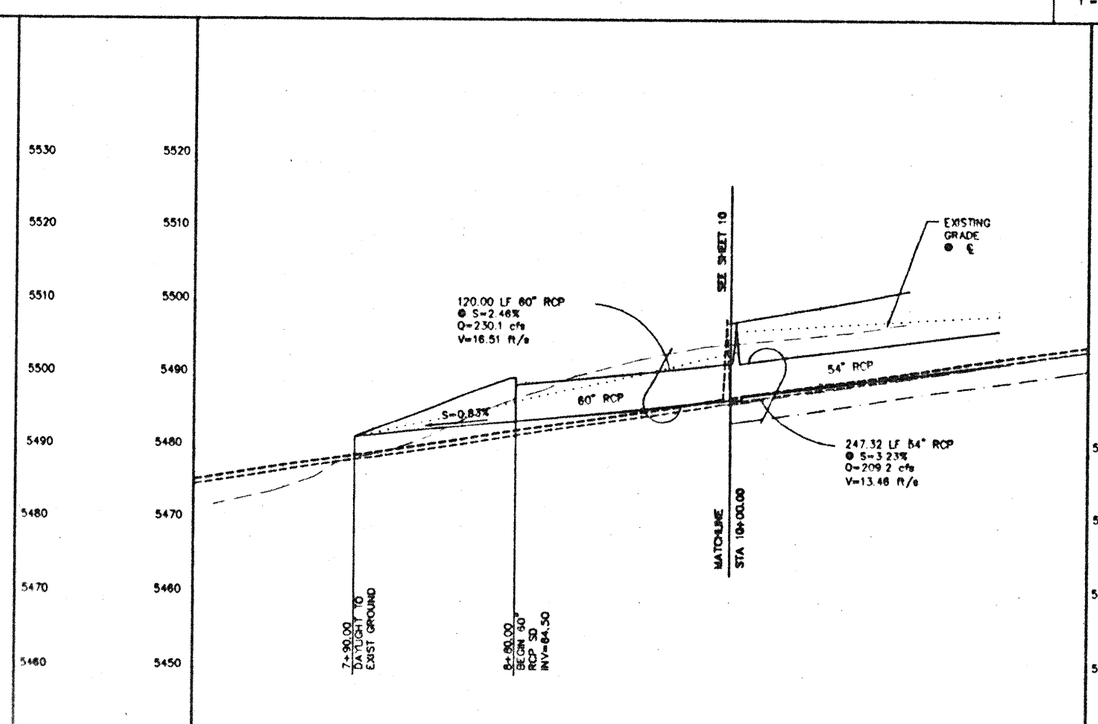

SCALES:
1"=40' HOR.
1"=10' VERT.

STORM DRAIN INLET INFORMATION

INLET NO ◇	INLET TYPE	STATION* & OFFSET	TOP GR EL	INV OUT
1	TYPE A	10+05.99, 18' LT	96.51	89.00
2	TYPE A	10+08.89, 18' RT	96.62	89.00
11	DOUBLE TYPE D	11+31.25, 0' RT	09.00	05.00

*STATIONING IS TO MIDPOINT OF GRATE @ FACE OF CURB

CONNECTOR PIPE INFORMATION

FROM INLET NO ◇	Q (CFS)	DIA. (IN)	LENGTH (FT)	SLOPE (FT/FT)
1	10.45	18"	22.11'	0.060
2	10.45	18"	15.28'	0.087

ISAACSON & ARFMAN, P.A.
Consulting Engineering Associates
128 Monroe Street N.E.
Albuquerque New Mexico
168FV4.DWG/dh 07/06/01

CITY OF ALBUQUERQUE
PUBLIC WORKS DEPARTMENT
ENGINEERING GROUP

TITLE: FOUR HILLS VILLAGE--20TH INSTALLMENT
VIA POSADA LOT 3
STA 9+00.00 TO STA 10+00.00 STA 10+00.00 TO END
STORM DRAIN PLAN & PROFILE

Design Review Committee | City Engineer Approval | Last Design Update | No./Day/Yr | No./Day/Yr

JUL 0 2 2001 | JUL 13 2001 CITY ENGINEER

City Project No. 5028 | Zone Map No. 14-22 | Sheet 12 of 23

AS-BUILT INFORMATION
CONTRACTOR | WORK STAKED BY | INSPECTED BY | ACCEPTANCE BY | FIELD VERIFICATION BY | DRAWINGS CORRECTED BY | MICRO-FILM INFORMATION | RECORDED BY | DATE | NO.

BENCH MARKS
ACS BENCHMARK "5-M22" LOCATED 60.0' EAST OF MUNICIPAL LIMITS LINE, 77.9' SOUTHEAST OF POWER POLE SE #37 AND 186.0' NORTHWEST OF POWER POLE #60. A STANDARD ACS BRASS DISK SET IN CONCRETE. STAMPED "5-M22, 1975 ACS". (NGVD 1929)
ELEVATION = 5594.518'

SURVEY INFORMATION
FIELD NOTES
1 | 3/94 | ALS

ENGINEER'S SEAL
GENEVIEVE L. DONART NEW MEXICO 15088

NO.	DATE	REMARKS	BY
		REVISIONS	

DESIGN
DESIGNED BY GLD DATE 6/01
DRAWN BY RTH DATE 2/01
CHECKED BY FCA DATE 2/01

SCANNED BY PLANNING

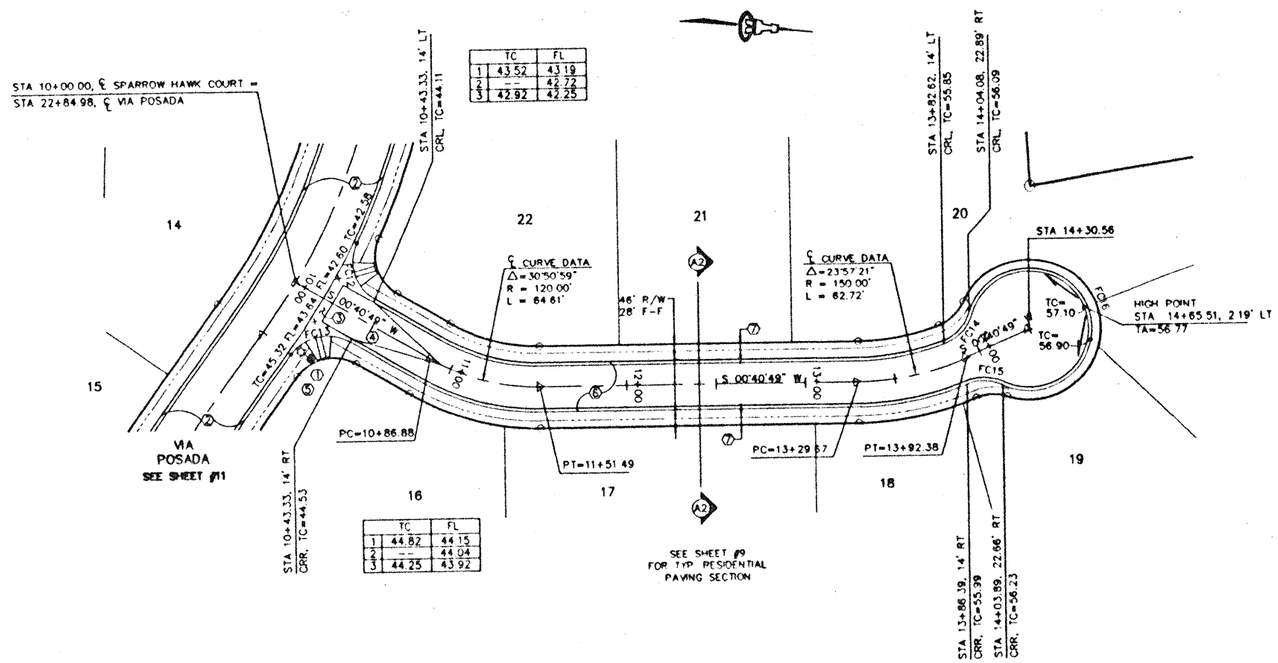

	TC	FL
1	43.52	43.19
2	--	42.72
3	42.92	42.25

	TC	FL
1	44.82	44.15
2	--	44.04
3	44.25	43.92

KEYED CONSTRUCTION NOTES

1. CONSTRUCT HANDICAP RAMP PER PER COA STD DWG #2441.
2. STANDARD CURB & GUTTER PER COA STD DWG #2415.
3. CONSTRUCT PCC VALLEY GUTTER 6' WIDE, 1 1/2" INVERT PER COA STD DWG #2420
4. FULL CROWN TO NO CROWN TRANSITION 50' MIN. LENGTH PER COA STD DWG #2401.
5. TRANSITION FROM MOUNTABLE TO STANDARD CURB PER COA STD DWG #2418.
6. MOUNTABLE CURB & GUTTER PER COA TD DWG #2415.
7. 4" THICK 4' WIDE FUTURE (DEFERRED) PCC SIDEWALK PER COA STD DWG #2430.

FACE OF CURB CURVE TABLE

CURVE	LENGTH	RADIUS	DELTA
FC12	39.12	25.00	89°04'59"
FC13	39.14	25.00	89°06'32"
FC14	20.66	25.00	47°21'32"
FC15	23.08	25.00	52°53'26"
FC16	170.32	35.00	278°48'37"

SPARROW HAWK COURT

SCALES:
1"=40' HOR.
1"=10' VERT.

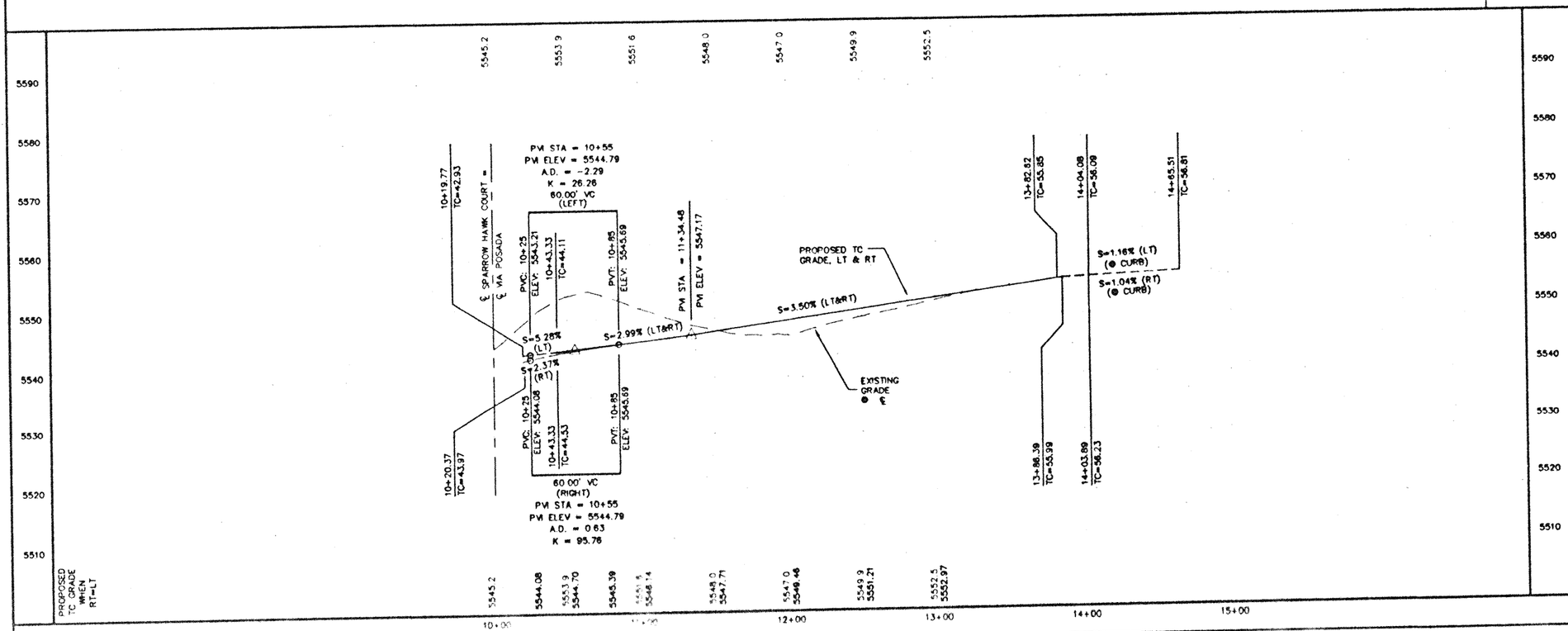

KEYED CONSTRUCTION NOTES

AS-BUILT INFORMATION

CONTRACTOR
WORK STAKED BY
INSPECTOR
ACCEPTANCE BY
REVISION BY
DATE
DATE
DATE

BENCH MARKS

ACS BENCHMARK "5-M22", LOCATED 80.0' EAST OF MUNICIPAL LIMITS LINE, 77.9' SOUTHEAST OF POWER POLE SE #37 AND 186.0' NORTHWEST OF POWER POLE #60 A STANDARD ACS BRASS DISK SET IN CONCRETE, STAMPED "5-M22, 1975 ACS" (NGVD 1929)
ELEVATION= 5594.518'

MICRO-FILM INFORMATION
RECORDED BY
DATE
NO.

SURVEY INFORMATION
FIELD NOTES

1	ALS	3/94

ENGINEER'S SEAL
GENEVIEVE L. BONART
NEW MEXICO
15098
LICENSED PROFESSIONAL ENGINEER
7/9/01

NO.	DATE	REMARKS	BY
		REVISIONS	

DESIGN
DESIGNED BY GLD DATE 6/01
DRAWN BY RFH DATE 2/01
CHECKED BY FCA DATE 2/01

ISAACSON & ARFMAN, P.A.
Consulting Engineering Associates
128 Monroe Street N.E.
Albuquerque New Mexico
168FV3.DWG/rh 06/26/01

CITY OF ALBUQUERQUE
PUBLIC WORKS DEPARTMENT
ENGINEERING GROUP

TITLE: FOUR HILLS VILLAGE--20TH INSTALLMENT
SPARROW HAWK COURT
STA 10+00 TO END
PAVING PLAN & PROFILE

Design Review Committee: JUL 5 2001 — DRC REVIEW COMMITTEE
City Engineer Approval: JUL 13 2001 — CITY ENGINEER
Last Design Update: No/Day/Yr
No/Day/Yr

City Project No. 5038
Zone Map No. M-22
Sheet 13 Of 23

SCANNED BY PLANNING

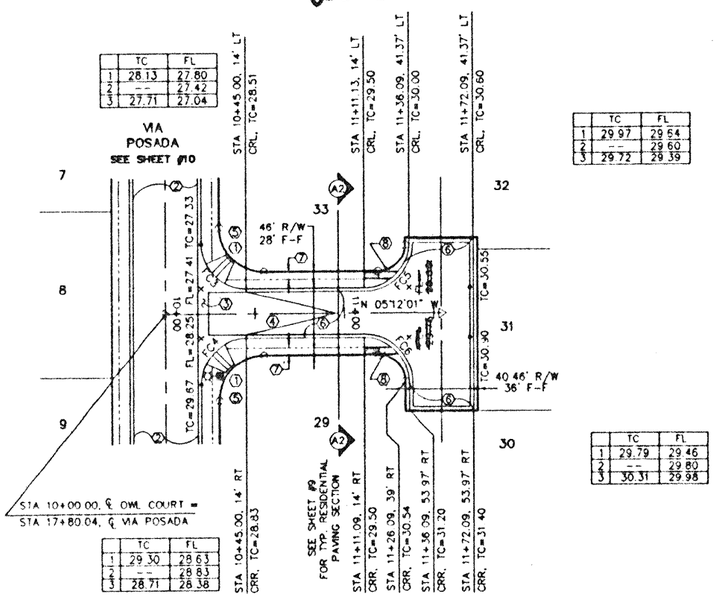

	TC	FL
1	28.13	27.80
2	--	27.42
3	27.71	27.04

	TC	FL
1	29.97	29.54
2	--	29.60
3	29.72	29.39

	TC	FL
1	29.79	29.46
2	--	29.80
3	30.31	29.98

	TC	FL
1	29.30	28.63
2	--	28.83
3	28.71	28.38

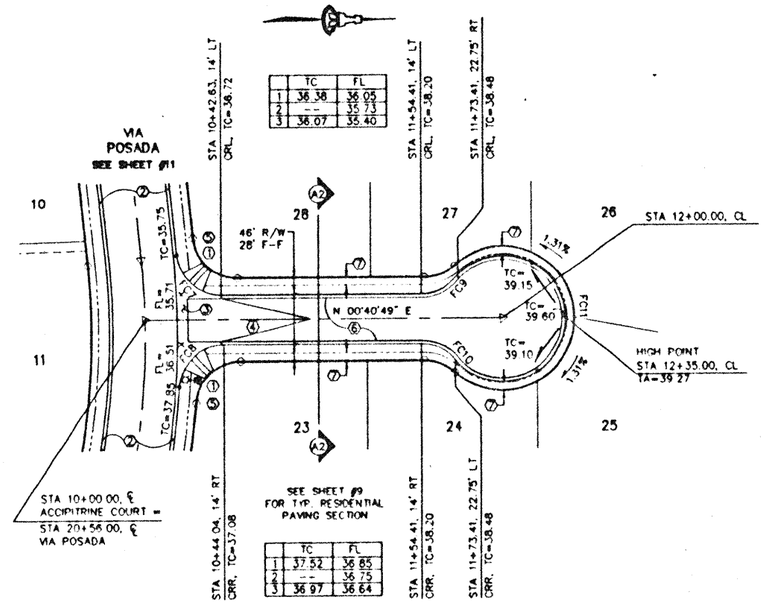

	TC	FL
1	36.38	36.05
2	--	35.73
3	36.07	35.40

	TC	FL
1	37.52	36.85
2	--	36.75
3	36.97	36.64

KEYED CONSTRUCTION NOTES

1. CONSTRUCT HANDICAP RAMP PER COA STD DWG# 2441, CASE II (THROUGHOUT PROJECT)
2. STANDARD CURB & GUTTER PER COA STD DWG #2415.
3. CONSTRUCT PCC VALLEY GUTTER 6' WIDE, 1 1/2" INVERT PER COA STD DWG #2420.
4. FULL CROWN TO NO CROWN TRANSITION 50' MIN. LENGTH PER COA STD DWG #2401.
5. TRANSITION FROM MOUNTABLE TO STANDARD CURB PER COA STD DWG #2418.
6. MOUNTABLE CURB & GUTTER PER COA STD DWG #2415.
7. 4" THICK 4' WIDE FUTURE (DEFERRED) PCC CONC. SIDEWALK PER COA STD DWG #2430.
8. CONSTRUCT HANDICAP RAMP PER DETAIL ON SHEET 9.

FACE OF CURB CURVE TABLE

CURVE	LENGTH	RADIUS	DELTA
FC3	39.27	25.00	90°00'00"
FC4	39.27	25.00	90°00'00"
FC5	39.23	25.00	89°53'53"
FC6	39.27	25.00	90°00'00"
FC7	36.70	25.00	84°07'10"
FC8	37.58	25.00	86°07'19"
FC9	21.58	25.00	49°27'30"
FC10	21.58	25.00	49°27'30"
FC11	170.38	35.00	278°55'00"

OWL COURT

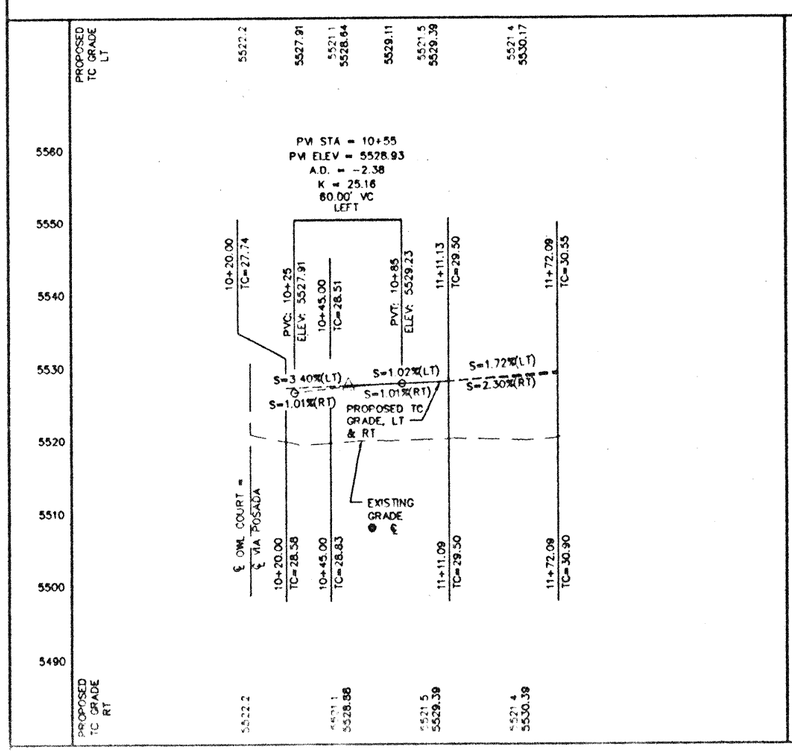

ACCIPITRINE COURT

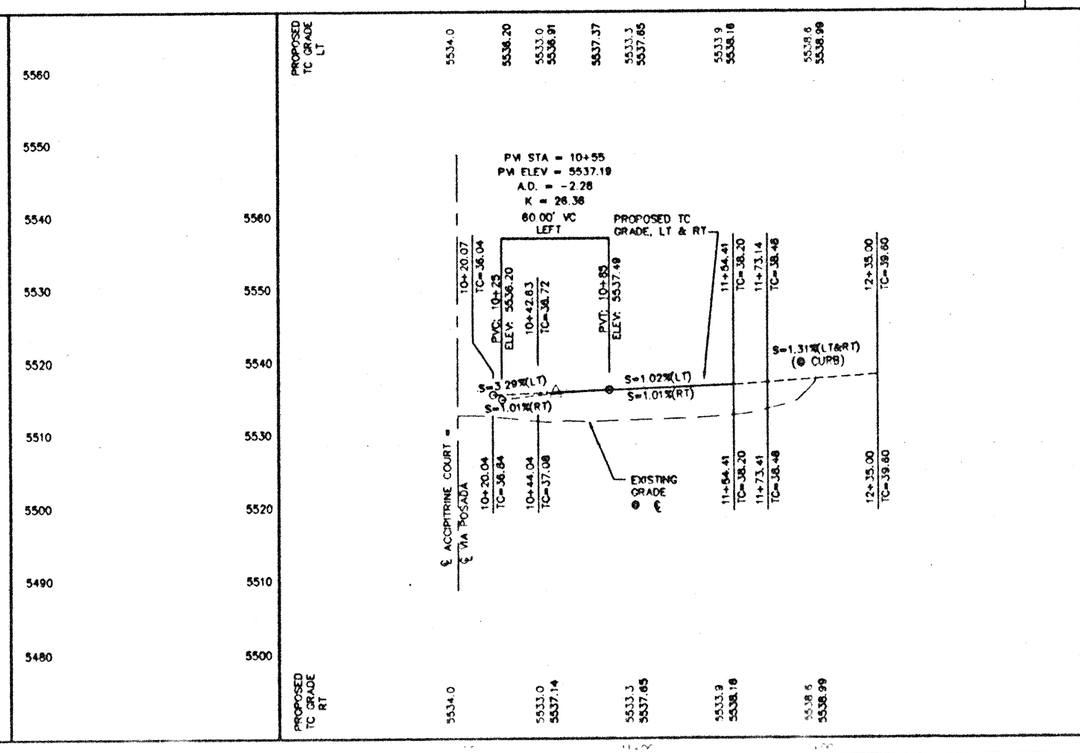

SCALES:
1"=40' HOR.
1"=10' VERT.

AS-BUILT INFORMATION
CONTRACTOR
CORR. STAMPED BY — DATE
INSPECTOR'S ACCEPTANCE BY — DATE
REPRESENTATIVE BY — DATE
DESIGNER BY — DATE
MICRO-FILM INFORMATION
RECORDED BY — DATE
NO.

BENCH MARKS
ACS BENCHMARK "5-M22", LOCATED 60.0' EAST OF MUNICIPAL LIMITS LINE, 77.9' SOUTHEAST OF POWER POLE SE #37 AND 186.0' NORTHWEST OF POWER POLE #60 A STANDARD ACS BRASS DISK SET IN CONCRETE, STAMPED "5-M22, 1975 ACS" (NGVD 1929)
ELEVATION= 5594.518'

SURVEY INFORMATION
FIELD NOTES

1	ALS	3/94

ENGINEER'S SEAL
GENEVIEVE L. BONART
NEW MEXICO
15088
7/9/01

NO	DATE	REMARKS	BY
		REVISIONS	
		DESIGN	

DESIGNED BY GLD DATE 6/01
DRAWN BY RFH DATE 2/01
CHECKED BY FCA DATE 2/01

ISAACSON & ARFMAN, P.A.
Consulting Engineering Associates
128 Monroe Street N.E.
Albuquerque New Mexico
168P V2.DWG 07/06/01

CITY OF ALBUQUERQUE
PUBLIC WORKS DEPARTMENT
ENGINEERING GROUP

TITLE: FOUR HILLS VILLAGE--2011 INSTALLMENT
OWL COURT & ACCIPITRINE COURT
STA 10+00 TO END STA 10+00 TO END
PAVING PLAN & PROFILE

Design Review Committee
City Engineer Approval
JUL 13 2001
CITY ENGINEER
Last Design Update

City Project No	Zone Map No	Sheet
5038	M-22	14 of 23

SCANNED BY
PLANNING

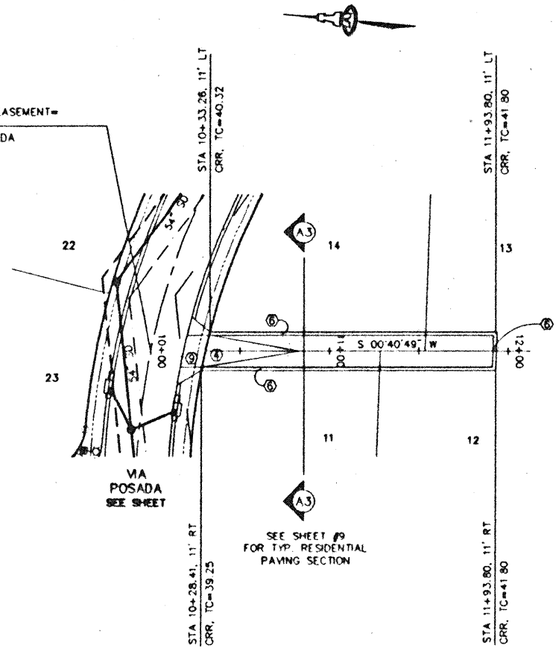

ACCESS EASEMENT

SCALES:
1"=40' HOR.
1"=10' VERT.

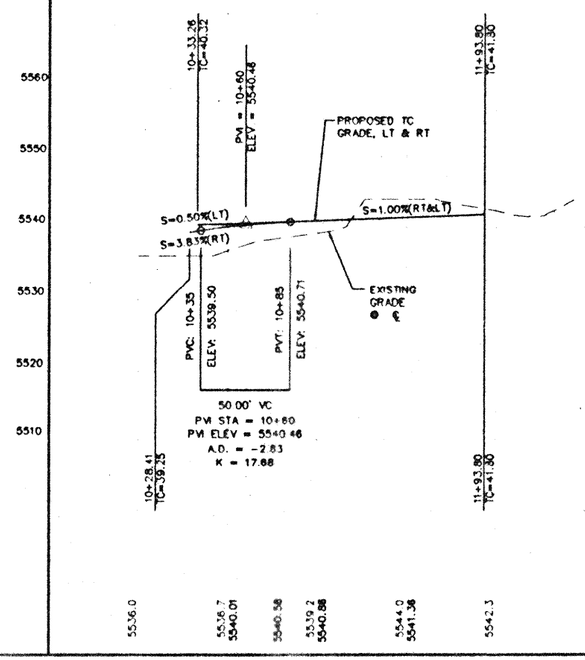

KEYED CONSTRUCTION NOTES

1. CONSTRUCT HANDICAP RAMP PER COA STD DWG# 2441.
2. STANDARD CURB & GUTTER PER COA STD DWG #2415.
3. CONSTRUCT PCC VALLEY GUTTER 6' WIDE, 1 1/2" INVERT PER COA STD DWG #2420.
4. FULL CROWN TO NO CROWN TRANSITION 50' MIN. LENGTH PER COA STD DWG #2401.
5. TRANSITION FROM MOUNTABLE TO STANDARD CURB PER COA STD DWG #2418.
6. MOUNTABLE CURB & GUTTER PER COA STD DWG #2415.
7. 4" THICK 4' WIDE FUTUER (DEFERRED) PCC CONC SIDEWALK PER COA STD DWG #2430.
8. CONSTRUCT HANDICAP RAMP PER DETAIL ON SHEET 9
9. DRIVE PAD PER COA STD DWG #2425.

AS-BUILT INFORMATION

CONTRACTOR
STAKED BY — DATE
REPRESENTATIVE — DATE
FIELD VERIFICATION BY — DATE
FIELD VERIFICATION BY — DATE
CORRECTED BY — DATE

MICRO-FILM INFORMATION
RECORDED BY — DATE
NO.

BENCH MARKS

ACS BENCHMARK "5-M22", LOCATED 60.0' EAST OF MUNICIPAL LIMITS LINE, 77.9' SOUTHEAST OF POWER POLE SE #37 AND 186.0' NORTHWEST OF POWER POLE #60 A STANDARD ACS BRASS DISK SET IN CONCRETE, STAMPED "5-M22, 1975 ACS" (NGVD 1929) ELEVATION= 5594.518'

SURVEY INFORMATION

	FIELD NOTES
1	ALS 3/94

ENGINEER'S SEAL

GENEVIEVE L. BONNET
NEW MEXICO
15089
PROFESSIONAL ENGINEER
7/9/01

NO	DATE	REMARKS	BY

REVISIONS

DESIGN

		DATE
DESIGNED BY	GLD	6/01
DRAWN BY	RFH	2/01
CHECKED BY	FCA	2/01

ISAACSON & ARFMAN, P.A.
Consulting Engineering Associates
128 Monroe Street N.E.
Albuquerque New Mexico
168FV3.DWG/th 07/03/01

CITY OF ALBUQUERQUE
PUBLIC WORKS DEPARTMENT
ENGINEERING GROUP

TITLE: FOUR HILLS VILLAGE--20TH INSTALLMENT
ACCESS EASEMENT
STA 10+00.00 TO END
PAVING PLAN & PROFILE

Design Review Committee
REVIEW AGENCY
City Engineer Approval
JUL 13 2001
CITY ENGINEER
Last Design Update — Date/Time — Date/Time

City Project No.	Zone Map No.	Sheet	Of
5038	M-22	15	23

SCANNED BY PLANNING

RESTRAINED JOINT LENGTHS, L_T, FOR HORIZONTAL BENDS, VALVES, AND DEAD ENDS, (FT.)					
SIZE	HORZ. BENDS				VALVES & DEAD ENDS
	90°	45°	22 1/2°	11 1/4°	
12	30	12	6	3	85
10	26	11	5	3	72
8	22	9	4	2	60
6	17	7	3	2	46
4	12	5	2	1	32

RESTRAINED JOINT LENGTHS, L_T, FOR REDUCERS, (FT.) MINIMUM UNOBSTRUCTED, STRAIGHT-RUN LENGTH RESTRAIN EITHER LARGE PIPE, OR SMALL PIPE.					
SIZE	LARGE SIDE	SMALL SIDE	SIZE	LARGE SIDE	SMALL SIDE
12x10	25	30	10x6	44	73
12x8	45	68	10x4	58	141
12x6	67	121	8x8	25	33
12x4	74	213	8x4	43	83
10x8	24	30	6x4	24	35

RESTRAINED JOINT LENGTHS, L_T, FOR TEES, (FT.) ALL JOINTS AT THE TEE MUST BE RESTRAINED.		
SIZE	RUN	BRANCH
12x12x12	15	17
12x12x10	10	18
12x12x8	6	19
12x12x6	3	19
12x12x4	1	18
10x10x10	12	13
10x10x8	8	16
10x10x6	4	4
10x10x4	2	20
8x8x8	6	17
8x8x6	3	15
8x8x4	2	20
6x6x6	6	20
6x6x4	2	

THIS TABLE IS BASED UPON THE FOLLOWING CRITERIA:

DEPTH OF BURY: 3.0 FT. MINIMUM
FACTOR OF SAFETY: 1.25
MATERIAL: PVC PIPE
SOIL TYPE: GM/SM - SILTY GRAVELS AND SILTY SANDS, GRAVEL-SAND-SILT MIXTURES
TEST PRESSURE: 150 PSI
TRENCH TYPE 4: PIPE BEDDED IN SAND, GRAVEL, OR CRUSHED STONE TO DEPTH OF 1/8 PIPE DIAMETER, 4 INCH MINIMUM; BACKFILL COMPACTED TO TOP OF PIPE.

DIFFERENT CRITERIA, E.G., DUCTILE IRON PIPE, GREATER DEPTH OF BURY, ETC., WILL REQUIRE DIFFERENT RESTRAINED LENGTHS. THESE MUST BE CALCULATED BY A QUALIFIED PROFESSIONAL ENGINEER AND APPROVED BY THE PUBLIC WORKS DEPARTMENT.

RESTRAINED JOINT LENGTHS FOR WATERLINE FITTINGS

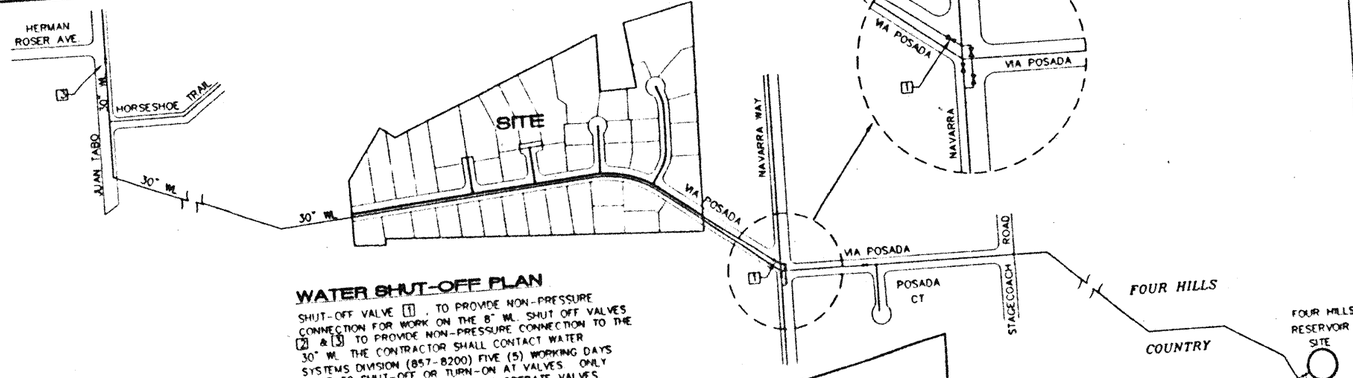

WATER SHUT-OFF PLAN

SHUT-OFF VALVE [1], TO PROVIDE NON-PRESSURE CONNECTION FOR WORK ON THE 8" WL. SHUT OFF VALVES [2] & [3] TO PROVIDE NON-PRESSURE CONNECTION TO THE 30" WL. THE CONTRACTOR SHALL CONTACT WATER SYSTEMS DIVISION (857-8200) FIVE (5) WORKING DAYS PRIOR TO SHUT-OFF OR TURN-ON AT VALVES. ONLY CITY PERSONNEL ARE ALLOWED TO OPERATE VALVES.

SCALE: 1"=60'

FOUR HILLS VILLAGE 20TH INSTALLMENT TRACT A (12-29-98, BK. 98c, PG. 367)

BLOCK 1 VISTA FOUR HILLS (5-25-79, D9-133)

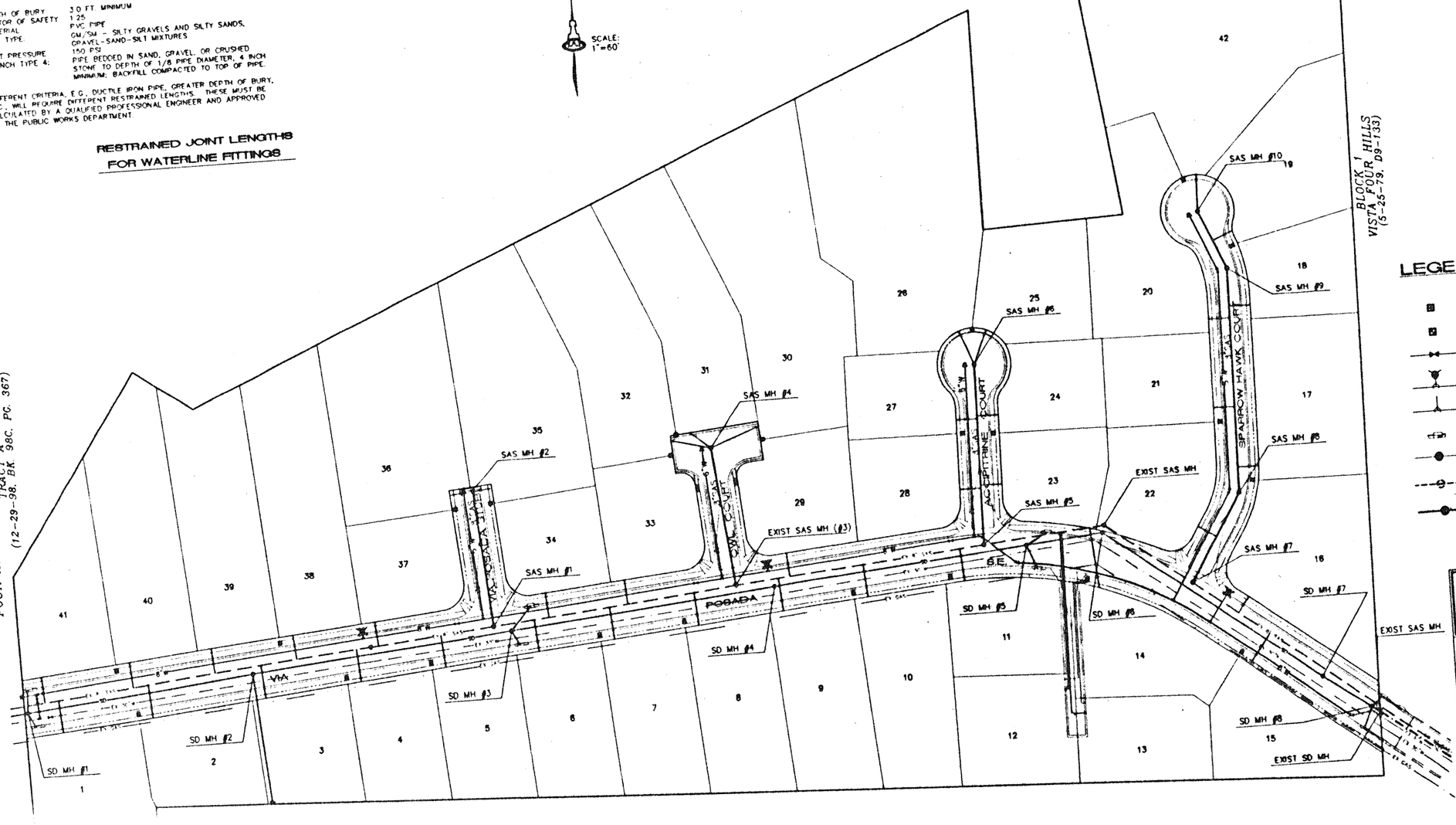

LEGEND

- SINGLE WATER METER & BOX
- DOUBLE WATER METER & BOX
- GATE VALVE W/ TYPE 'A' VALVE BOX
- FIRE HYDRANT
- WATER LINE W/ FITTING
- STORM DRAIN CATCH BASIN
- STORM DRAIN MANHOLE
- EXISTING SAS MANHOLE
- PROPOSED SAS MANHOLE

AS-BUILT INFORMATION
CONTRACTOR / DATE
WORK DONE BY / DATE
FIELD CHECKS / DATE
ACCEPTANCE BY / DATE
CITY ENGINEER / DATE

MICRO-FILM INFORMATION
RECORDED BY / DATE
NO.

BENCH MARKS
ACS BENCHMARK "5-M22", LOCATED 60.0' EAST OF MUNICIPAL LIMITS LINE, 77.9' SOUTHEAST OF POWER POLE SE #37 AND 186.0' NORTHWEST OF POWER POLE #80 A STANDARD ACS BRASS DISK SET IN CONCRETE, STAMPED "5-M22, 1975 ACS" (NGVD 1929)
ELEVATION= 5594.518'

SURVEY INFORMATION
FIELD NOTES
1 ALS 3/94

ENGINEER'S SEAL
GENEVIEVE L. BONART NEW MEXICO 15089 PROFESSIONAL ENGINEER

NO.	DATE	REMARKS	BY
		REVISIONS	
		DESIGN	
		DESIGNED BY GLD	DATE 6/01
		DRAWN BY RFH	DATE 2/01
		CHECKED BY	DATE 2/01

ISAACSON & ARFMAN, P.A.
Consulting Engineering Associates
128 Monroe Street N.E.
Albuquerque New Mexico
168UNSTR DWG.fh 07/09/01

CITY OF ALBUQUERQUE
PUBLIC WORKS DEPARTMENT
ENGINEERING GROUP

TITLE: FOUR HILLS VILLAGE--20TH INSTALLMENT
MASTER UTILITY PLAN

Design Review Committee: JUL 18 2001 — REVIEW COMMITTEE
City Engineer Approval: JUL 18 2001 — CITY ENGINEER
Last Design Update
No./Reg.No. | No./Reg.No.

City Project No. 5038 | Zone Map No. M-22 | Sheet 16 Of 23

SCANNED BY PLANNING

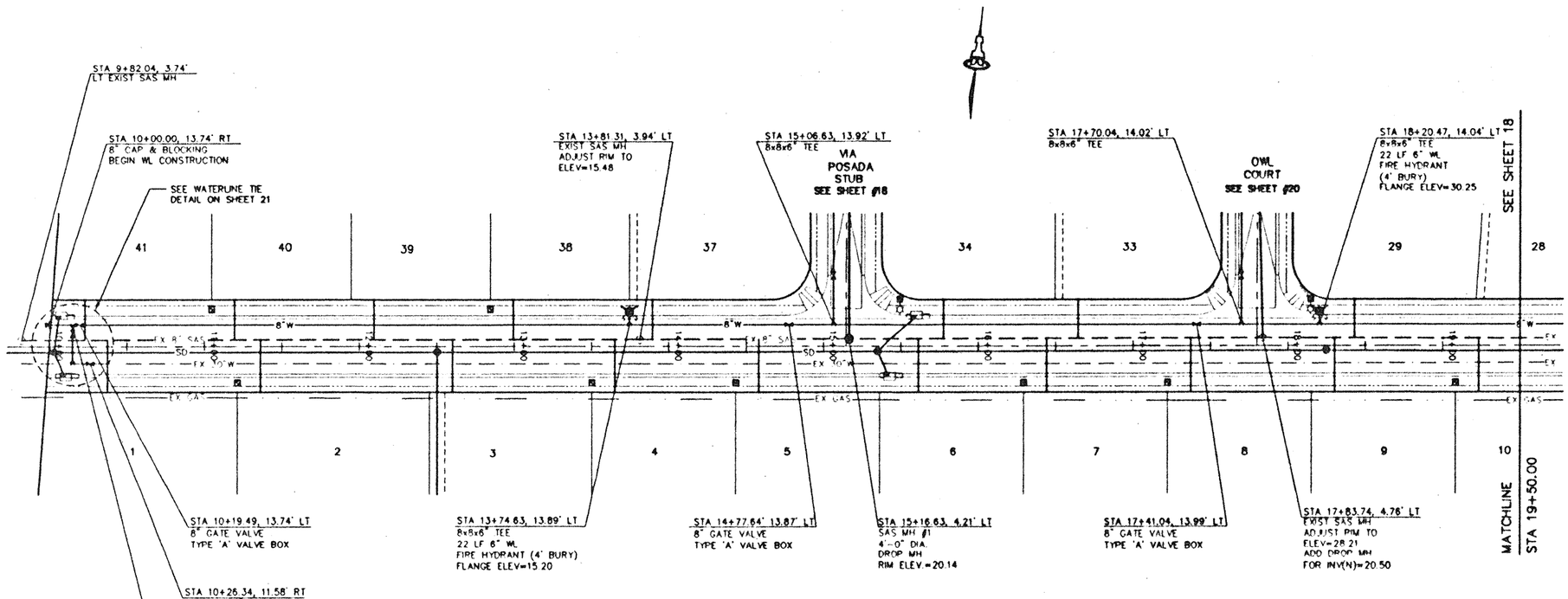

NOTE:

CONTRACTOR SHALL LOCATE AND PROTECT EXISTING GAS LINE DURING CONSTRUCTION.

VIA POSADA

SCALES:

1"=40' HOR.
1"=10' VERT.

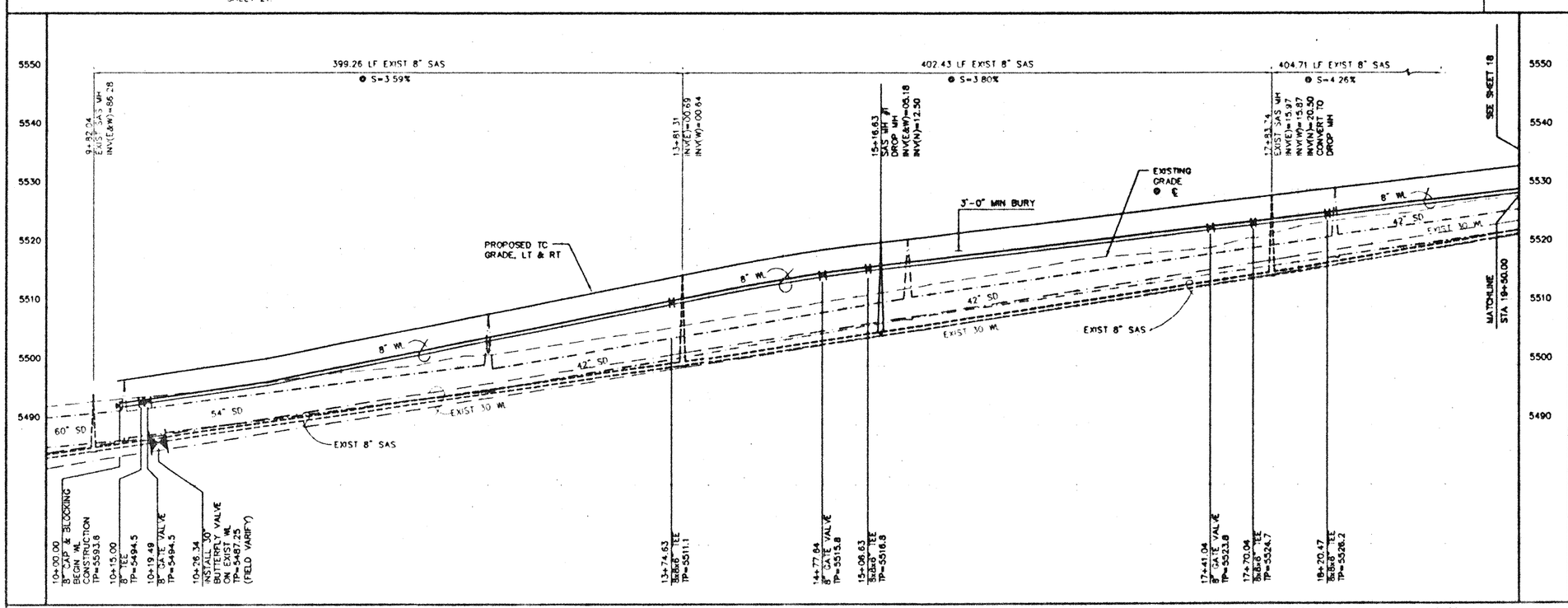

GENERAL NOTES

1. CONSTRUCT SAS SERVICES PER COA STD DWG #2125.
2. CONSTRUCT ALL SINGLE & DOUBLE WATER SERVICES PER COA STD DWG #2361, #2362, & #2363.
3. SEE SHEET #16 FOR WATER SHUT-OFF PLAN.
4. SEE SHEET #16 FOR RESTRAINED JOINT LENGTHS FOR WATER LINE FITTINGS.
5. CONSTRUCT FIRE HYDRANTS PER DESIGNATED DEPTHS & LENGTHS PER COA STD DWG #2340.
6. SEE COA STD DWG #2328 FOR VALVE RING & COVER DETAIL.
7. CONSTRUCT DROP MANHOLES PER COA STD DWG #2116.

UTILITY SERVICE TABLE

LOT NO	STATION WATER, LENGTH	STATION SAS, LENGTH	SAS INV @ R/W
1	11+21.30, 38'	10+36.69, 34'	94.69
2		11+36.30, 34'	97.73
3	13+50.32, 38'	12+60.32, 34'	08.93
4		13+65.32, 34'	09.18
5	14+43.32, 38'(S)	14+58.32, 34'	13.59
6	16+29.32, 38'(S)	15+61.32, 34'	16.95
7	17+22.32, 38'	16+44.32, 34'	19.43
8		17+37.32, 34'	22.22
9	19+08.32, 38'	18+30.32, 34'	25.01
10		19+23.32, 34'	27.79
29	SEE SHEET 20	18+43.04, 27'	24.39
33		16+64.63, 27'	19.04
34	SEE SHEET 18	15+77.63, 27'	16.43
37		13+89.63, 27'	09.40
38	12+84.63, 11'	12+99.63, 27'	04.90
39		12+09.63, 27'	00.40
40		11+19.63, 27'	95.90
41	11+04.63, 11'	10+22.95, 27'	92.77

ALL WATER SERVICES ARE DOUBLE EXCEPT WHERE NOTED AS (S) SINGLE.

AS-BUILT INFORMATION

CONTRACTOR — WORK STAKED BY — DATE
INSPECTOR'S NOTES BY — DATE
FIELD VERIFICATION BY — DATE
DRAWINGS CORRECTED BY — DATE

MICRO-FILM INFORMATION

RECORDED BY — DATE
NO.

BENCH MARKS

ACS BENCHMARK "5-M22", LOCATED 60.0' EAST OF MUNICIPAL LIMITS LINE, 77.9' SOUTHEAST OF POWER POLE SE #37 AND 186.0' NORTHWEST OF POWER POLE #90 A STANDARD ACS BRASS DISK SET IN CONCRETE, STAMPED "5-M22, 1975 ACS" (NGVD 1929)
ELEVATION= 5594.518'

SURVEY INFORMATION

FIELD NOTES: 3/94 ALS; 1

ENGINEER'S SEAL

GENEVIEVE L. ROBERT — NEW MEXICO — 15088 — PROFESSIONAL ENGINEER

NO	DATE	REMARKS	BY

REVISIONS

DESIGN: DESIGNED BY GLD — DATE 5/01; DRAWN BY RFH — DATE 2/01; CHECKED BY FCA — DATE 2/01

ISAACSON & ARFMAN, P.A.
Consulting Engineering Associates
128 Monroe Street N.E.
Albuquerque New Mexico
168UTL1.DWG/h VIEW: 1 07/03/01

CITY OF ALBUQUERQUE
PUBLIC WORKS DEPARTMENT
ENGINEERING GROUP

TITLE: FOUR HILLS VILLAGE--20TH INSTALLMENT
VIA POSADA
STA 10+00.00 TO STA 19+50.00
UTILITY PLAN & PROFILE

Design Review Committee — JUL 2001 — REVIEW COMMITTEE
City Engineer Approval — JUL 13 2001 — CITY ENGINEER
Last Design Update — Mo./Day/Yr. — Mo./Day/Yr.

City Project No. 5038 | Zone Map No. M-22 | Sheet 17 Of 23

SCANNED BY PLANNING

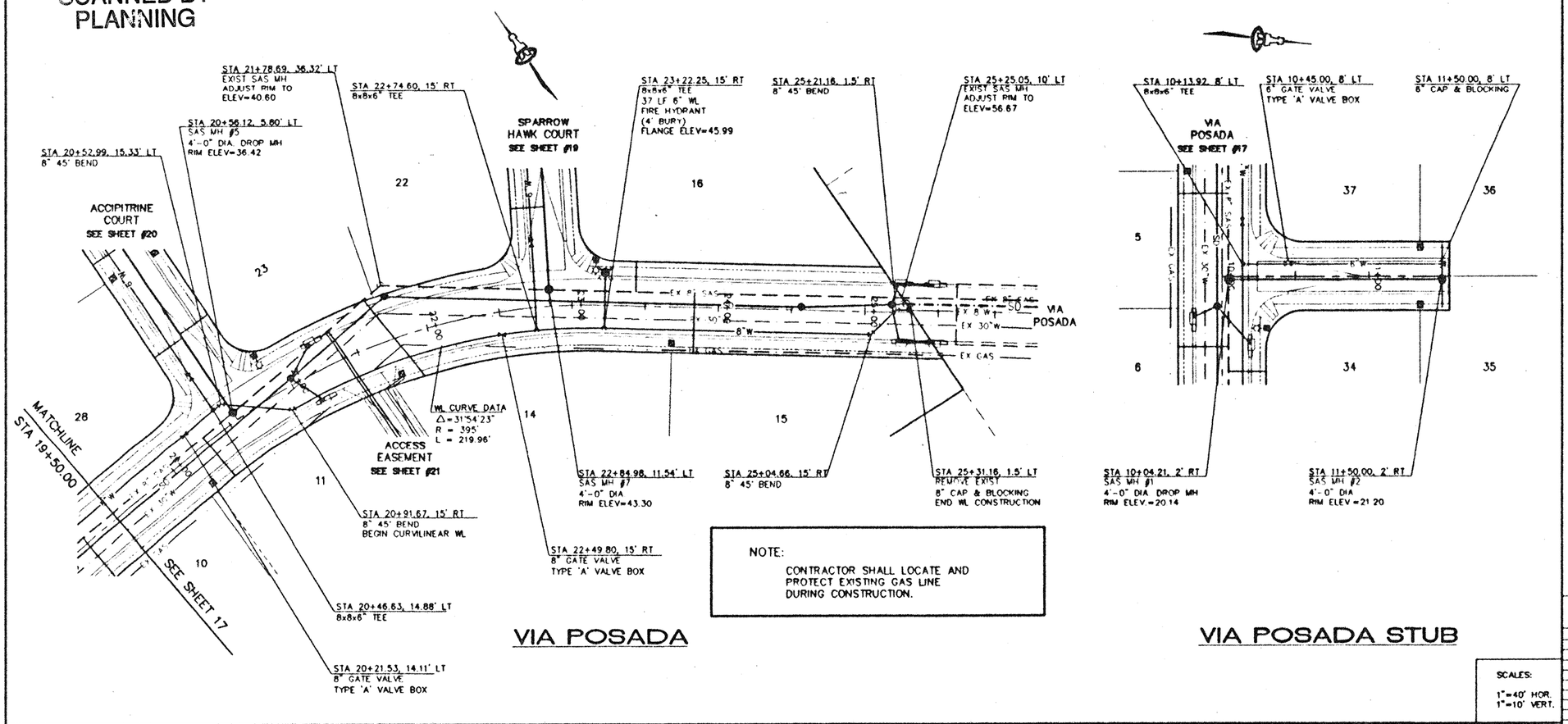

NOTE:

CONTRACTOR SHALL LOCATE AND PROTECT EXISTING GAS LINE DURING CONSTRUCTION.

VIA POSADA

VIA POSADA STUB

SCALES:
1"=40' HOR.
1"=10' VERT.

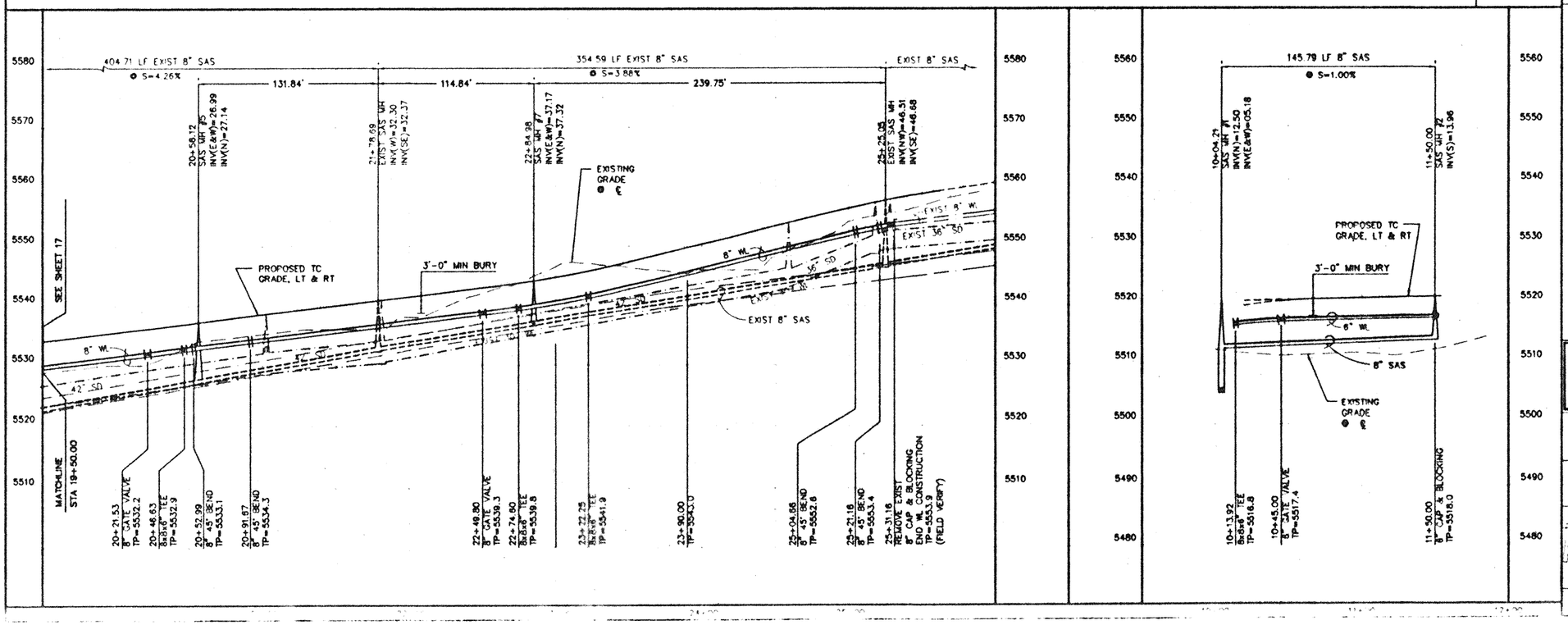

GENERAL NOTES

1. CONSTRUCT SAS SERVICES PER COA STD DWG #2125.
2. CONSTRUCT ALL SINGLE & DOUBLE WATER SERVICES PER COA STD DWG #2361, #2362, & #2363.
3. SEE SHEET #16 FOR WATER SHUT-OFF PLAN.
4. SEE SHEET #16 FOR RESTRAINED JOINT LENGTHS FOR WATER LINE FITTINGS.
5. CONSTRUCT FIRE HYDRANTS PER DESIGNATED DEPTHS & LENGTHS PER COA STD DWG #2340.
6. SEE COA STD DWG #2328 FOR VALVE RING & COVER DETAIL.
7. CONSTRUCT DROP MANHOLES PER COA STD DWG #2116.

UTILITY SERVICE TABLE

LOT NO.	STATION WATER, LENGTH	STATION SAS, LENGTH	SAS INV @ R/W
11	20+15.00, 30'(S)	20+30.40, 35'	30.81
14	23+68.55, 9'	21+89.40, 66'	35.32
15		23+83.55, 40'	44.45
16	SEE SHEET 19	23+43.37, 20'	41.55
34	11+35.00, 27'	SEE SHEET 17	
35		11+50.00, 19'	16.21
36	11+35.00, 11'	11+50.00, 23'	16.29
37		SEE SHEET 17	

ALL WATER SERVICES ARE DOUBLE EXCEPT WHERE NOTED AS (S) SINGLE.

AS-BUILT INFORMATION
CONTRACTOR
WORK STAKED BY
INSPECTOR'S ACCEPTANCE BY
DATE
REPRODUCIBLE BY
DATE
CORRECTED BY
DATE
MICRO-FILM INFORMATION
RECORDED BY
DATE

BENCH MARKS
ACS BENCHMARK "5-M22", LOCATED 60.0' EAST OF MUNICIPAL LIMITS LINE, 77.9' SOUTHEAST OF POWER POLE SE #37 AND 186.0' NORTHWEST OF POWER POLE #60 A STANDARD ACS BRASS DISK SET IN CONCRETE, STAMPED "5-M22, 1975 ACS" (NGVD 1929)
ELEVATION= 5594.518'

SURVEY INFORMATION
FIELD NOTES
3/94
ALS
1

ENGINEER'S SEAL
GENEVIEVE L. BONART
NEW MEXICO
15088
7/9/01

NO.	DATE	REMARKS	BY

REVISIONS

DESIGN
DESIGNED BY GLD DATE 6/01
DRAWN BY RFH DATE 2/01
CHECKED BY FCA DATE 2/01

ISAACSON & ARFMAN, P.A.
Consulting Engineering Associates
128 Monroe Street N.E.
Albuquerque New Mexico
168U7L1.DWG-th VIEW 2 07/03/01

CITY OF ALBUQUERQUE
PUBLIC WORKS DEPARTMENT
ENGINEERING GROUP

TITLE: FOUR HILLS VILLAGE--20TH INSTALLMENT
VIA POSADA & VIA POSADA STUB
STA 19+50.00 TO END STA 10+00.00 TO END
UTILITY PLAN & PROFILE

Design Review Committee
JUL 0 2 2001
DRC CHAIRMAN
SEVERA CARRILLO
City Engineer Approval
JUL 13 2001
CITY ENGINEER
Last Design Update
No./Date/In
No./Date/In

City Project No. 5038 | Zone Map No. M-22 | Sheet 18 Of 23

SCANNED BY PLANNING

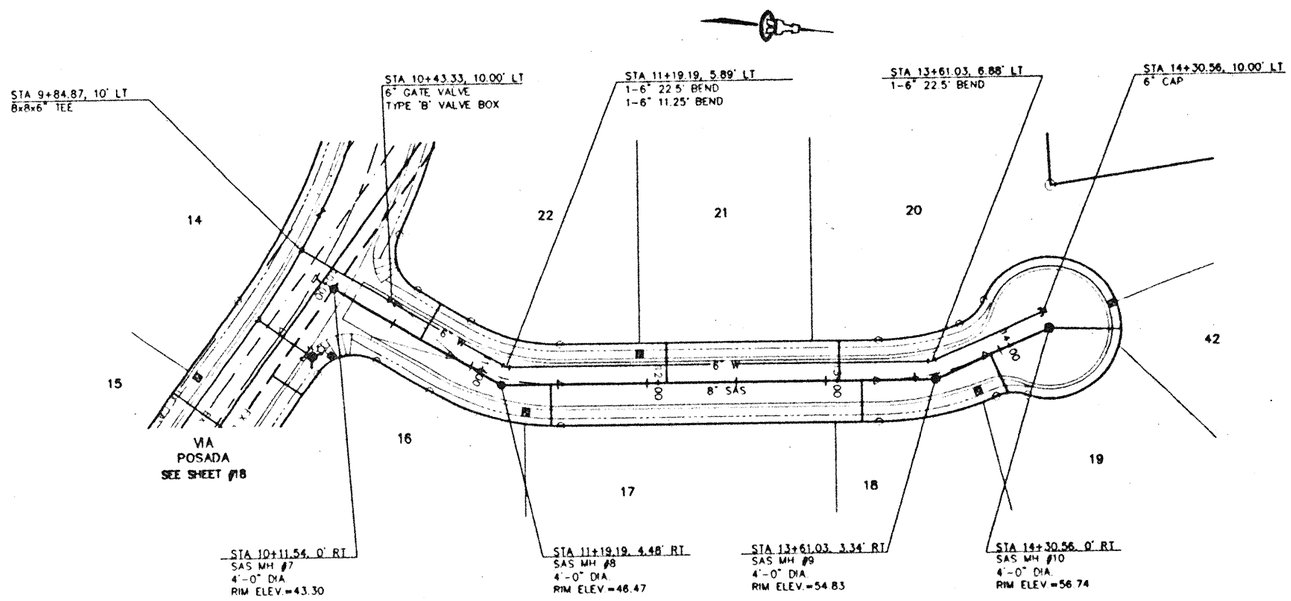

SPARROW HAWK COURT

SCALES:
1"=40' HOR.
1"=10' VERT.

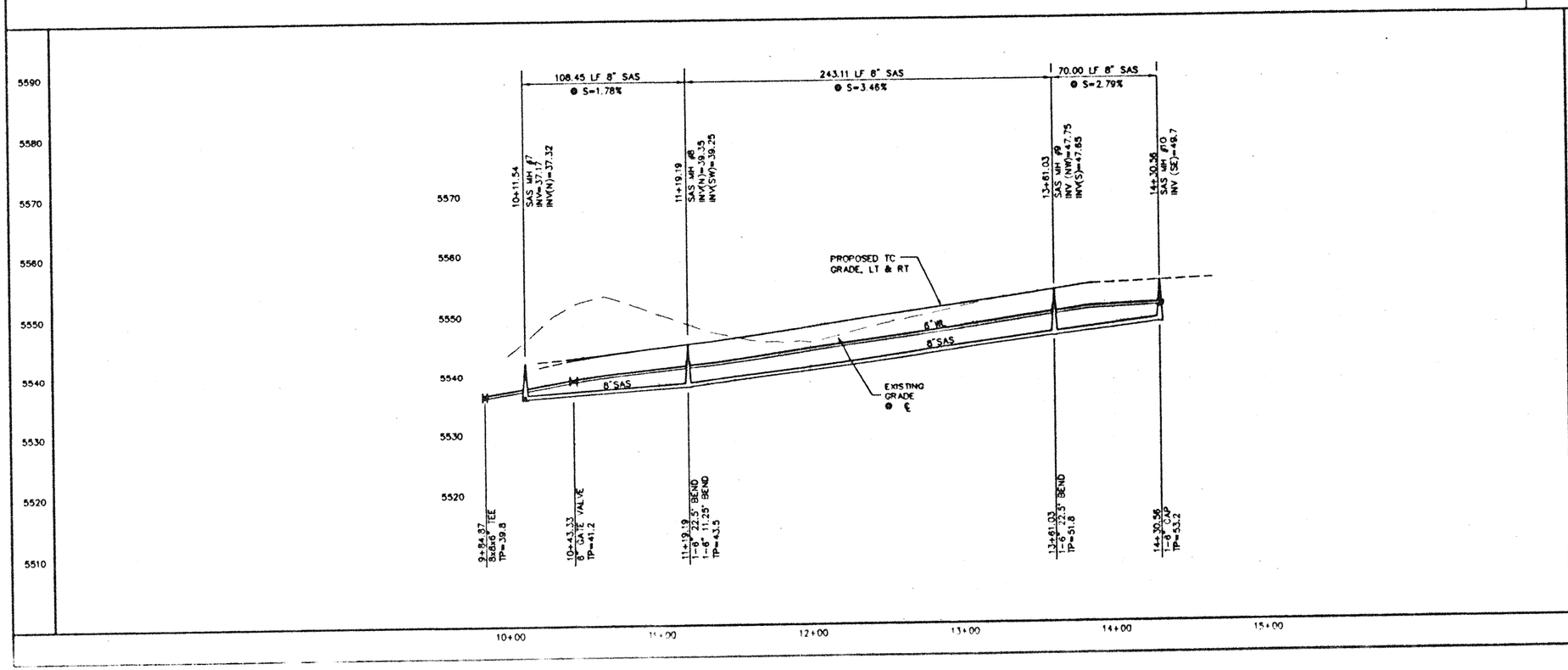

GENERAL NOTES

1. CONSTRUCT SAS SERVICES PER COA STD DWG #2125.
2. CONSTRUCT ALL SINGLE & DOUBLE WATER SERVICES PER COA STD DWG #2361, #2362, & #2363.
3. SEE SHEET #16 FOR WATER SHUT-OFF PLAN.
4. SEE SHEET #16 FOR RESTRAINED JOINT LENGTHS FOR WATER LINE FITTINGS.
5. CONSTRUCT FIRE HYDRANTS PER DESIGNATED DEPTHS & LENGTHS PER COA STD DWG #2340.
6. SEE COA STD DWG #2328 FOR VALVE RING & COVER DETAIL.

UTILITY SERVICE TABLE

LOT NO	STATION WATER, LENGTH	STATION SAS, LENGTH	SAS INV @ R/W
16	11+34.48, 25.7'	SEE SHEET 18	-
17		11+47.13, 23'	42.61
18	13+80.68, 26'	13+20.18, 23'	48.68
19		13+64.23, 24'	51.00
42	14+68.43, 39'	14+67.51, 40'	51.47
20		13+07.62, 23'	48.23
21	11+96.11, 6.8'	12+11.11, 23'	44.85
22		10+67.52, 23'	40.16

ALL WATER SERVICES ARE DOUBLE EXCEPT WHERE NOTED AS (S) SINGLE.

AS-BUILT INFORMATION

CONTRACTOR | WORK STAKED BY | DATE | WORK ACCEPTANCE BY | DATE | FIELD DRAWING BY | DATE | DRAWINGS CORRECTED BY | DATE

MICRO-FILM INFORMATION

RECORDED BY | DATE | NO.

BENCH MARKS

ACS BENCHMARK "5-M22", LOCATED 60.0' EAST OF MUNICIPAL LIMITS LINE, 77.9' SOUTHEAST OF POWER POLE SE #37 AND 186.0' NORTHWEST OF POWER POLE #60 A STANDARD ACS BRASS DISK SET IN CONCRETE, STAMPED "5-M22, 1975 ACS" (NGVD 1929)
ELEVATION= 5594.518'

SURVEY INFORMATION

FIELD NOTES

3/94 ALS 1

ENGINEER'S SEAL

GENEVIEVE L. BONAFI NEW MEXICO 15088 LICENSED PROFESSIONAL ENGINEER 7/19/01

NO.	DATE	REMARKS	BY
		REVISIONS	
		DESIGN	

DESIGNED BY GLD DATE 6/01
DRAWN BY RFH DATE 2/01
CHECKED BY FCA DATE 2/01

ISAACSON & ARFMAN, P.A.
Consulting Engineering Associates
128 Monroe Street N.E.
Albuquerque New Mexico
168UTL3.DWG/h 06/26/01

CITY OF ALBUQUERQUE
PUBLIC WORKS DEPARTMENT
ENGINEERING GROUP

TITLE: FOUR HILLS VILLAGE--20TH INSTALLMENT
SPARROW HAWK COURT
STA 10+00 TO END
UTILITY PLAN & PROFILE

Design Review Committee: JUL 2001 — DRC CHAIR, REVIEW COMMITTEE
City Engineer Approval: JUL 13 2001 — CITY ENGINEER
Last Design Update: Mo./Day/Yr. | Mo./Day/Yr.

City Project No. 5038 | Zone Map No. M-22 | Sheet 19 Of 23

SCANNED BY PLANNING

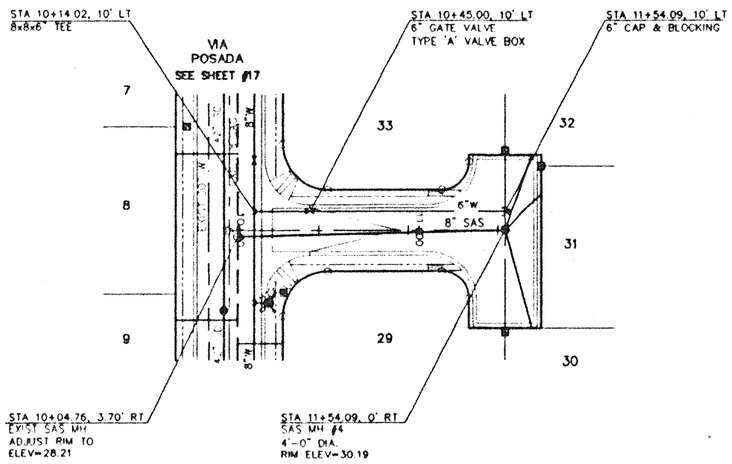

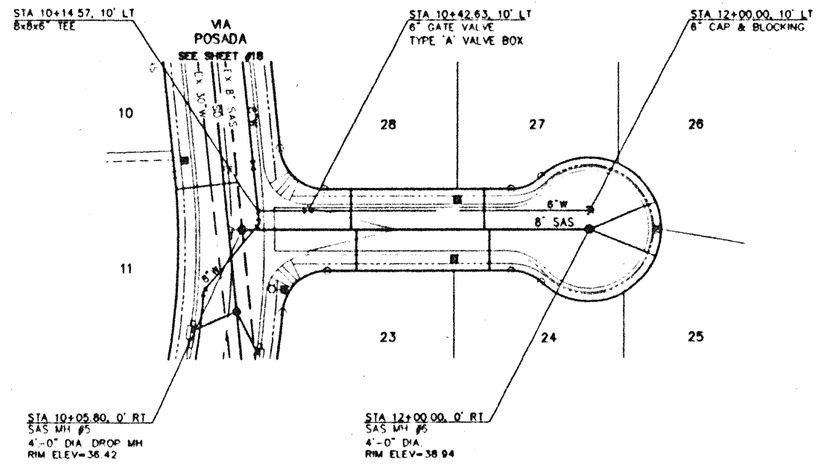

OWL COURT

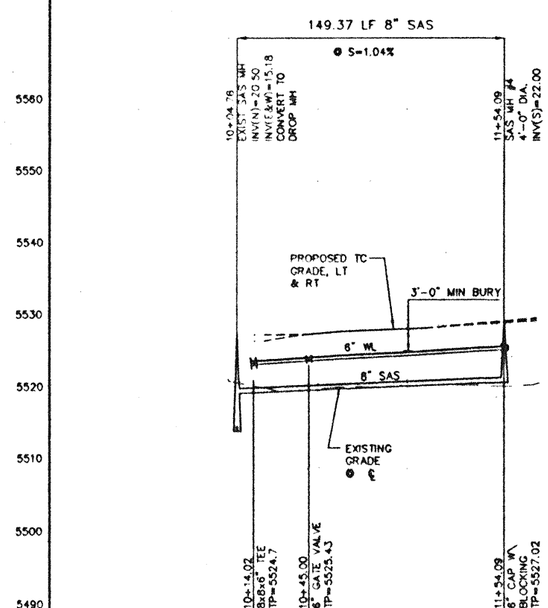

ACCIPITRINE COURT

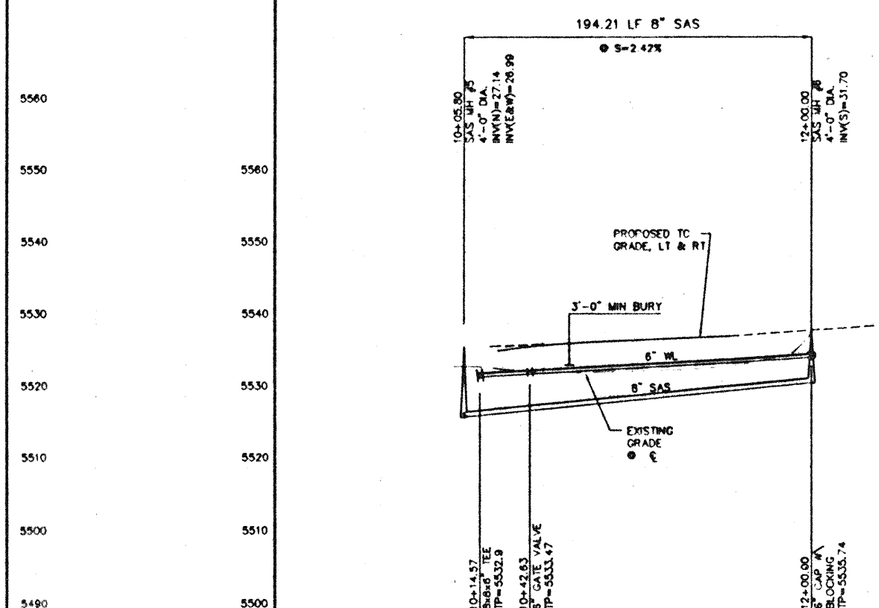

SCALES:
1"=40' HOR.
1"=10' VERT.

GENERAL NOTES

1. CONSTRUCT SAS SERVICES PER COA STD DWG #2125.
2. CONSTRUCT ALL SINGLE & DOUBLE WATER SERVICES PER COA STD DWG #2361, #2362, & #2363
3. SEE SHEET #16 FOR WATER SHUT-OFF PLAN.
4. SEE SHEET #16 FOR RESTRAINED JOINT LENGTHS FOR WATER LINE FITTINGS.
5. CONSTRUCT FIRE HYDRANTS PER DESIGNATED DEPTHS & LENGTHS PER COA STD DWG #2340.
6. SEE COA STD DWG #2328 FOR VALVE RING & COVER DETAIL.
7. CONSTRUCT DROP MANHOLES PER COA STD DWG #2116.

UTILITY SERVICE TABLE

LOT NO	STATION WATER, LENGTH	STATION SAS, LENGTH	SAS INV @ R/W
23	11+24.33, 27'	10+69.75, 23'	32.35
24		11+44.17, 23'	33.10
25	12+37.89, 38'	12+37.08, 40'	34.48
26		12+37.08, 40'	34.31
27	11+26.17, 7'	11+41.17, 23'	33.07
28		10+66.75, 23'	37.31
29	11+54.18, 67'	SEE SHEET	-
30		11+69.09, 57'	26.37
31	11+79.32, 33'(S)	11+74.32, 29'	25.47
32	11+54.09, 35'	11+69.09, 45'	25.17
33		SEE SHEET	-

ALL WATER SERVICES ARE DOUBLE EXCEPT WHERE NOTED AS (S) SINGLE.

ISAACSON & ARFMAN, P.A.
Consulting Engineering Associates
128 Monroe Street N.E.
Albuquerque New Mexico
168JTL2.DWG/fh 07/03/01

CITY OF ALBUQUERQUE
PUBLIC WORKS DEPARTMENT
ENGINEERING GROUP

TITLE: FOUR HILLS VILLAGE--20TH INSTALLMENT
OWL COURT & ACCIPITRINE COURT
STA 10+00 TO END STA 10+00 TO END
UTILITY PLAN & PROFILE

Design Review Committee: DRC CHAIRMAN, DEVELOPMENT REVIEW COMMITTEE
City Engineer Approval: JUL 13 2001, CITY ENGINEER
Last Design Update
No./Day/Yr | No./Day/Yr

City Project No 5038 | Zone Map No M-22 | Sheet 20 Of 23

AS-BUILT INFORMATION
CONTRACTOR WORK STAKED BY — DATE
INSPECTOR'S SURVEY BY — DATE
FIELD VERIFICATION BY — DATE
DRAWINGS CORRECTED BY — DATE
MICRO-FILM INFORMATION
RECORDED BY — DATE
NO.

BENCH MARKS
ACS BENCHMARK "5-M22", LOCATED 60.0' EAST OF MUNICIPAL LIMITS LINE, 77.9' SOUTHEAST OF POWER POLE SE #37 AND 186.0' NORTHWEST OF POWER POLE #90 A STANDARD ACS BRASS DISK SET IN CONCRETE, STAMPED "5-M22, 1975 ACS" (NGVD 1929)
ELEVATION= 5594.518'

SURVEY INFORMATION
FIELD NOTES
1 — ALS — 3/94

ENGINEER'S SEAL
GENEVIEVE L. BONART, NEW MEXICO, 15088, REGISTERED PROFESSIONAL ENGINEER

NO	DATE	REMARKS	BY

REVISIONS
DESIGN
DESIGNED BY GLD DATE 6/01
DRAWN BY RFH DATE 2/01
CHECKED BY FCA DATE 2/01

SCANNED BY PLANNING

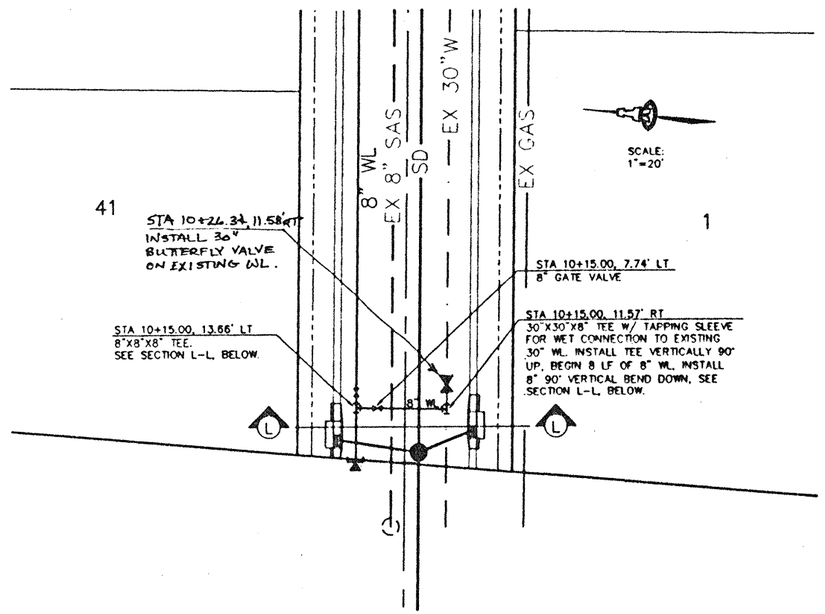

VIA POSADA WATERLINE TIE DETAIL

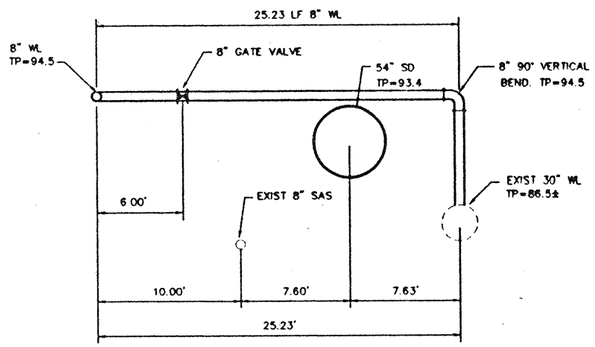

SECTION L-L

SCALE: 1"=5'

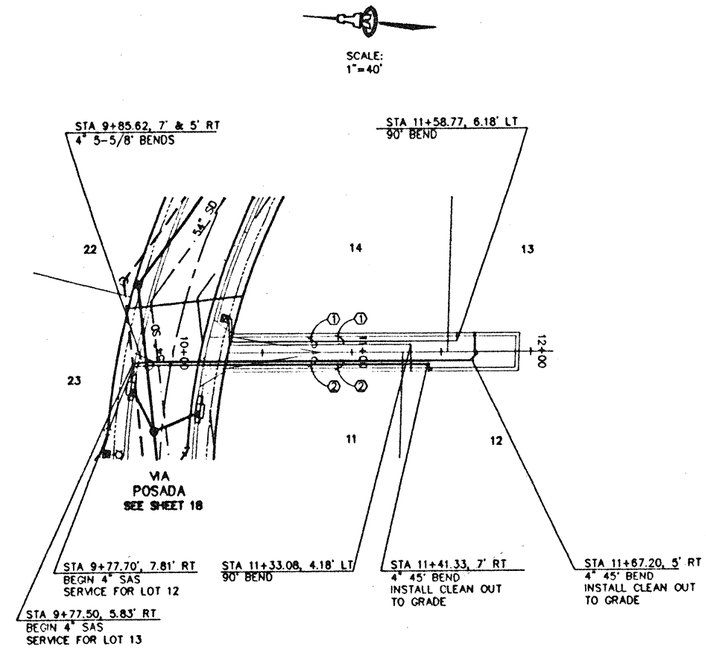

ACCESS EASEMENT

SCALES:
1"=40' HOR.
1"=10' VERT.

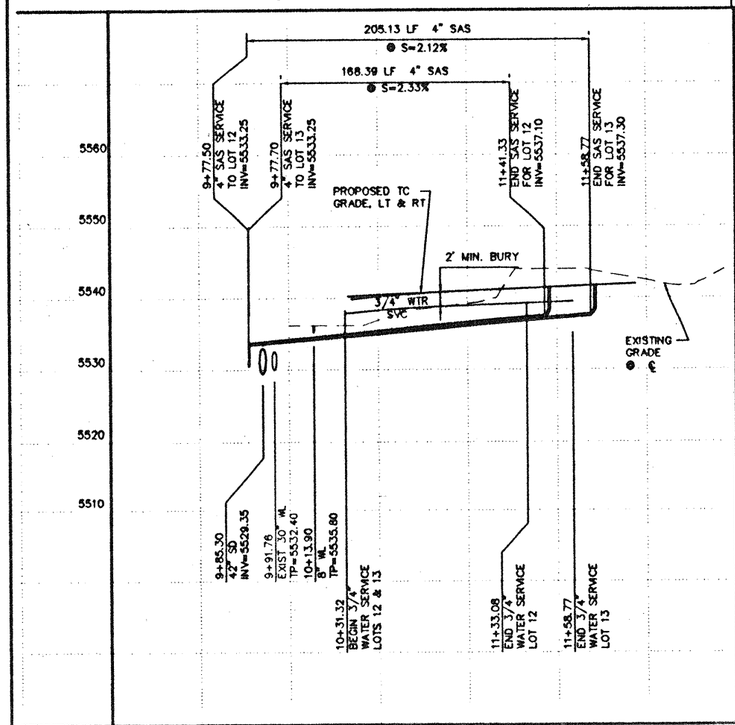

GENERAL NOTES

1. CONSTRUCT SAS SERVICES PER COA STD DWG #2125.
2. CONSTRUCT ALL SINGLE & DOUBLE WATER SERVICES PER COA STD DWG #2361, #2362, & #2363.
3. SEE SHEET #16 FOR WATER SHUT-OFF PLAN.
4. SEE SHEET #16 FOR RESTRAINED JOINT LENGTHS FOR WATER LINE FITTINGS.
5. CONSTRUCT FIRE HYDRANTS PER DESIGNATED DEPTHS & LENGTHS PER COA STD DWG #2340.
6. SEE COA STD DWG #2328 FOR VALVE RING & COVER DETAIL.

KEYED CONSTRUCTION NOTES

1. 3/4" WATER SERVICE CONNECTION FROM DOUBLE METER.
2. 4" SAS SERVICE

UTILITY SERVICE TABLE

LOT NO.	STATION WATER, LENGTH	STATION SAS, LENGTH	SAS INV @ ESMT
11	SEE SHEET 18	SEE SHEET 18	–
12	21+73.50, 9'	11+43.08, 168.39	37.10
13	21+73.50, 9'	11+68.77, 205.73	37.30
14	SEE SHEET 18	SEE SHEET 18	–

ALL WATER SERVICES ARE DOUBLE EXCEPT WHERE NOTED AS (S) SINGLE.

AS-BUILT INFORMATION
CONTRACTOR
WORK STAKED BY / DATE
INSPECTOR'S ACCEPTANCE BY / DATE
VERIFICATION BY / DATE
DOCUMENTED BY / DATE
COMPUTED BY / DATE
MICRO-FILM INFORMATION
RECORDED BY / DATE
NO.

BENCH MARKS
ACS BENCHMARK "5-M22", LOCATED 60.0' EAST OF MUNICIPAL LIMITS LINE, 77.9' SOUTHEAST OF POWER POLE SE #37 AND 186.0' NORTHWEST OF POWER POLE #60. A STANDARD ACS BRASS DISK SET IN CONCRETE. STAMPED "5-M22, 1975 ACS" (NGVD 1929) ELEVATION= 5594.518'

SURVEY INFORMATION
FIELD NOTES
ALS 3/94 1

ENGINEER'S SEAL
GENEVIEVE L. DONART
NEW MEXICO
15088
LICENSED PROFESSIONAL ENGINEER
7/30/01

NO.	DATE	REMARKS

REVISIONS

DESIGN
DESIGNED BY GLD DATE 6/01
DRAWN BY RFH DATE 2/01
CHECKED BY FCA DATE 2/01

ISAACSON & ARFMAN, P.A.
Consulting Engineering Associates
128 Monroe Street N.E.
Albuquerque New Mexico
168UTL5.DWG:fh 07/03/01

CITY OF ALBUQUERQUE
PUBLIC WORKS DEPARTMENT
ENGINEERING GROUP

TITLE: FOUR HILLS VILLAGE--20TH INSTALLMENT
ACCESS EASEMENT
STA 10+00.00 TO END
UTILITY PLAN & PROFILE

Design Review Committee: APPROVED JUL 10 2001 DESIGN REVIEW COMMITTEE
City Engineer Approval: APPROVED JUL 13 2001 CITY ENGINEER
Last Design Update | Mo./Day/Yr. | Mo./Day/Yr.

City Project No. 5038 | Zone Map No. M-22 | Sheet 21 Of 23

SCANNED BY
PLANNING

CONSTRUCTION TRAFFIC CONTROL GENERAL NOTES

1. CONTRACTOR MUST OBTAIN FROM CONSTRUCTION COORDINATION AN EXCAVATION/BARRICADING PERMIT BEFORE ENGAGING IN ANY CONSTRUCTION, MAINTENANCE OR REPAIR WORK IN ANY OF THE CITY OF ALBUQUERQUE'S RIGHTS-OF-WAY. EMERGENCY WORK THAT WOULD PRESERVE LIFE OR PROPERTY IS EXCLUDED WITH THE UNDERSTANDING, THAT A PERMIT SHALL BE OBTAINED WITHIN 24 TO 48 HOURS.

2. CONTRACTOR SHALL AT THE TIME OF PERMIT REQUEST, SUBMIT FOR APPROVAL BY CONSTRUCTION COORDINATION, A TRAFFIC CONTROL PLAN DETAILING ALL EXISTING TOPOGRAPHY SUCH AS LANE WIDTHS, DRIVEWAYS, AND BUSINESS/RESIDENTIAL ACCESSES. THE TRAFFIC CONTROL PLAN SHALL INCLUDE ALL PHASES OF WORK AND SCHEDULES INVOLVED IN THE CONSTRUCTION PROJECT. ANY SEPERATE PHASES OF A CONSTRUCTION PROJECT SHALL BE GIVEN AN INDIVIDUAL PERMIT EACH. BLANKET PERMITS WILL NOT BE ISSUED.

3. THESE TYPICAL TRAFFIC CONTROL PLANS DO NOT REFLECT THE EXISTING TOPOGRAPHY SUCH AS DRIVEWAYS, LANE WIDTHS, AND BUSINESS/RESIDENTIAL ACCESSES. EVERY LOCATION THAT REQUIRES CONSTRUCTION TRAFFIC CONTROL SHALL HAVE A DETAILED TRAFFIC CONTROL PLAN SHOWING ALL EXISTING TOPOGRAPHY.

4. CONSTRUCTION SHALL NOT BEGIN UNLESS A TRAFFIC CONTROL PLAN HAS BEEN APPROVED AND VERIFIED BY CONSTRUCTION COORDINATION.

5. CONSTRUCTION COORDINATION SHALL BE NOTIFIED 48 HOURS PRIOR TO ANY TRAFFIC CONTROL CHANGES NEEDED BY CONTRACTOR, THAT WERE NOT PREVIOUSLY APPROVED. THESE TRAFFIC CONTROL CHANGES SHALL BE REQUESTED IN WRITING ACCOMPANIED WITH A TRAFFIC CONTROL PLAN REFLECTING SUCH CHANGES.

6. ALL CONSTRUCTION TRAFFIC CONTROL DEVICES SHALL COMPLY TO THE MANUAL ON UNIFORM TRAFFIC CONTROL DEVICES (MUTCD), LATEST EDITION. IT IS THE RESPONSIBILITY OF THE CONTRACTOR TO INSTALL, SERVICE AND MAINTAIN ALL TRAFFIC CONTROL DEVICES. TRAFFIC CONTROL DEVICES SHALL NOT BE REMOVED OR ALTERED IN ANY WAY WITHOUT THE APPROVAL OF CONSTRUCTION COORDINATION, PER SECTION 6A-4 OF THE MUTCD, LATEST EDITION.

7. THE CONSTRUCTION TRAFFIC CONTROL INITIAL SET-UP SHALL BE BY AN AMERICAN TRAFFIC SAFETY SERVICES ASSOCIATION (ATSSA) CERTIFIED WORKSITE TRAFFIC SUPERVISOR. THE MAINTENANCE AND SERVICING SHALL ALSO BE DONE BY AN ATSSA CERTIFIED WORKSITE TRAFFIC SUPERVISOR OR EQUIVALENT.

8. CONTRACTOR IS RESPONSIBLE TO MAINTAIN AND SERVICE ALL TRAFFIC CONTROL DEVICES 24 HOURS A DAY, 7 DAYS A WEEK THROUGHOUT LENGTH OF PROJECT. CONTRACTOR IS RESPONSIBLE THAT ALL TRAFFIC CONTROL DEVICES COMPLY WITH THE MUTCD, LATEST EDITION.

9. ALL ADVANCE WARNING SIGNS SHALL BE DOUBLE INDICATED WHENEVER THERE ARE MULTI-LANE TRAFFIC IN ANY ONE GIVEN DIRECTION AND THERE IS SUFFICIENT MEDIAN SPACE.

10. ALL BARRICADES IN ALL TAPERS AND TANGENTS SHALL BE PLACED APART, A DISTANCE MEASURED IN FEET, EQUAL TO THAT OF THE POSTED SPEED LIMIT. NO EXCEPTIONS UNLESS APPROVED BY CONSTRUCTION COORDINATION PER MUTCD SECTION 6A-4.

△1 11. ALL WORK IN ARTERIAL ROADWAYS SHALL BE ON A CONTINUOUS 24 HOUR PER DAY BASIS UNTIL COMPLETED.

12. CONTRACTOR IS RESPONSIBLE TO PROVIDE CONSTRUCTION COORDINATION, A WEEKLY LOG OF DAILY INSPECTIONS OF BARRICADE AND MAINTENANCE SCHEDULES ON PROJECTS THAT ARE OVER ONE WEEK DURATION.

13. EQUIPMENT OR MATERIALS SHALL NOT BE STORED WITHIN 15 FEET OF A TRAVELED TRAFFIC LANE DURING NON-WORKING HOURS WITHOUT THE APPROVAL OF CONSTRUCTION COORDINATION.

14. CONTRACTOR SHALL PROVIDE AND MAINTAIN A SAFE AND ADEQUATE MEANS OF CHANNELIZING PEDESTRIAN TRAFFIC AROUND AND THROUGH THE CONSTRUCTION AREA.

15. CONTRACTOR IS RESPONSIBLE FOR OBLITERATION OF ANY CONFLICTING STRIPING AND RESPONSIBLE FOR ALL TEMPORARY STRIPING.

16. CONTRACTOR SHALL MAINTAIN ACCESS TO ALL FACILITIES, BUSINESSES AND/OR RESIDENTS AT ALL TIMES.

17. CONTRACTOR SHALL PROVIDE ACCESS SIGNS FOR BUSINESSES LOCATED WITHIN THE CONSTRUCTION AREA UNDER THE SUPERVISION OF CONSTRUCTION COORDINATION. EACH ACCESS SIGN SHALL HAVE 5 INCH, WHITE OPAQUE LETTERING ON BLUE REFLECTORIZED BACKGROUND. ACCESS SIGNS SHALL BE CONSIDERED INCIDENTAL TO THE BID AND NOT PART OF THE CONTRACT UNLESS OTHERWISE STATED. NO MORE THAN 3 BUSINESSES SHALL BE LISTED ON A ACCESS SIGN. SHOPPING CENTERS AND MALLS SHALL BE LISTED AS SUCH.

18. ALL ADVANCE WARNING SIGNS SHALL MEET THE MINIMUM REFLECTIVE INTENSITY REQUIREMENTS SET FORTH BY THE CITY OF ALBUQUERQUE. CONSTRUCTION COORDINATION SHALL DETERMINE ALL REQUIREMENTS AND APPROVE OR DISAPPROVE ANY ADVANCE WARNING SIGN PER SECTION 6A-4 OF THE MUTCD, LATEST EDITION.

△2 19. 48 HOURS PRIOR TO OCCUPYING OR CLOSING OF A RIGHT-OF-WAY, CONTRACTOR SHALL NOTIFY POLICE, FIRE DEPARTMENT, SCHOOLS, HOSPITALS, TRANSIT AUTHORITY, BUSINESSES AND/OR RESIDENTS THAT WILL BE AFFECTED BY THE CONSTRUCTION.

20. ANY FIELD ADJUSTMENTS SHALL BE APPROVED BY CONSTRUCTION COORDINATION.

21. EXCAVATIONS SHALL BE PLATED, TEMPORARILY PATCHED OR RESURFACED PRIOR TO OPENING OF TRAFFIC. A MINIMUM OF 11 FEET SHALL BE PROVIDED FOR TRAFFIC IN ANY GIVEN DIRECTION. CONTRACTOR IS RESPONSIBLE FOR ANY WORK INVOLVED IN SATISFYING THESE REQUIREMENTS.

22. CONTRACTOR SHALL AT ALL TIMES COMPLY WITH THE FOLLOWING:
1. STANDARDS AND REQUIREMENTS SET FORTH IN THE MANUAL ON UNIFORM TRAFFIC CONTROL DEVICES, LATEST EDITION.
2. THE CITY OF ALBUQUERQUE TRAFFIC CODE, LATEST EDITION.
3. SECTION 19 OF THE CITY OF ALBUQUERQUE'S STANDARD SPECIFICATIONS FOR PUBLIC WORK CONSTRUCTION, AS WELL AS OTHER SECTIONS.

23. FAILURE TO COMPLY WITH ANY OF THE ABOVE MENTIONED, WILL BE ADEQUATE CAUSE TO CEASE ALL WORK ON ANY CONSTRUCTION PROJECT. WORK WILL NOT RESUME UNTIL ALL REQUIREMENTS ARE ADDRESSED AND APPROVED BY CONSTRUCTION COORDINATION.

24. ALL TRAFFIC CONTROL DEVICES SHALL BE KEPT IN NEW-CLEAN CONDITION, WASHING OF EQUIPMENT IS INCIDENTAL TO IT'S PLACEMENT AND MAINTENANCE.

25. TRAFFIC CONTROL STANDARDS APPLY ONLY WHERE THE CONSTRUCTION TRAFFIC CONTROL PLANS ARE NOT SPECIFIC.

△3 26. ADVANCE WARNING SIGNS SHALL BE 36"x36" MIN. WITH SUPER ENGINEERING GRADE SHEETING OR BETTER. MOUNTING HEIGHT AT TOP OF SIGN SHALL BE THE SAME AS FOR A 48" SIGN AS INDICATED IN THE M.U.T.C.D.

△4 27. CONTRACTOR SHALL MAINTAIN A GRAFFITI-FREE WORKSITE. ALL GRAFFITI SHALL BE PROMPTLY REMOVED FROM ALL EQUIPTMENT, BOTH PERMANENT AND TEMPORARY.

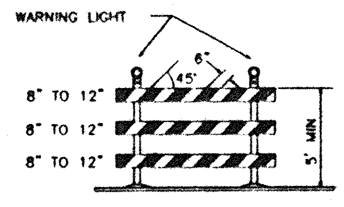

TYPE III BARRICADE

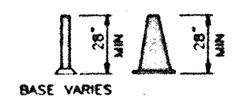

CONES

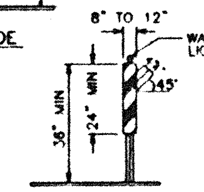

VERTICAL PANEL

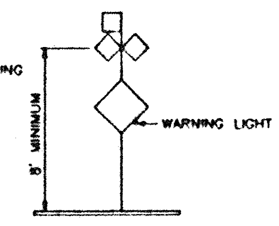

HIGH LEVEL WARNING DEVICE

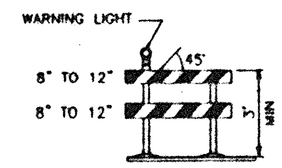

TYPE II BARRICADE COLLAPSIBLE

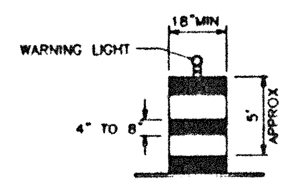

BARREL

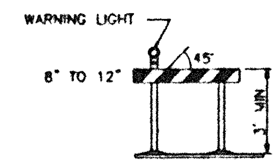

TYPE I BARRICADE COLLAPSIBLE

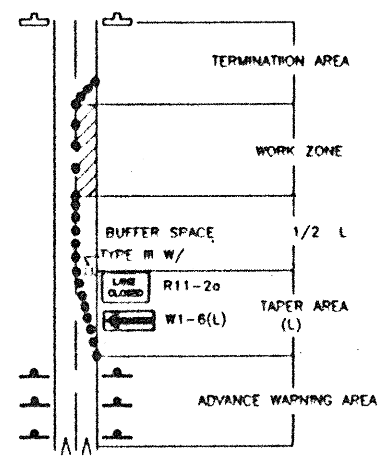

TRAFFIC CONTROL ELEMENTS

LEGEND

- WORK AREA
- BARRICADE – TYPE I, TYPE II, OR BARREL
- BARRICADE – TYPE III
- VERTICAL PANEL
- WARNING SIGN
- D — DISTANCE BETWEEN SIGNS – A DISTANCE MEASURED IN FEET EQUAL TO A VALUE OF TEN TIMES THE SPEED LIMIT OF THE STREET
- FLAGMAN POSITION
- S — SPACING BETWEEN BARRICADES – A DISTANCE MEASURED IN FEET EQUAL TO THE SPEED LIMIT OF THE STREET
- L — TAPER LENGTH – SEE CHART BELOW

THE TANGENT LENGTH IS EQUAL TO THE TAPER LENGTH FOR A GIVEN STREET.

TAPER REQUIREMENT

SPEED LIMIT (MPH)	TAPER LENGTH(L) (FEET)			MINIMUM NUMBER OF DEVICES FOR TAPER	MAXIMUM DEVICE SPACING IN FEET	
	10' LANE	11' LANE	12' LANE		ALONG TAPER	AFTER TAPER
20	70	75	80	5	20	20
25	105	115	125	6	25	25
30	150	165	180	7	30	30
35	205	225	245	8	35	35
40	270	295	320	9	40	40
45	450	495	540	13	45	45
50	500	550	600	13	50	50
55	550	605	660	13	55	55

RECOMMENDED SIGN SPACING(D) FOR ADVANCE WARNING SIGN SERIES

SPEED MILES PER HOUR	MINIMUM DISTANCE IN FEET BETWEEN SIGNS	MINIMUM DISTANCE IN FEET FROM LAST SIGN TO TAPER
0-20	10 X SPEED LIMIT	10 X SPEED LIMIT
25-30	10 X SPEED LIMIT	10 X SPEED LIMIT
30-35	10 X SPEED LIMIT	10 X SPEED LIMIT
40-45	10 X SPEED LIMIT	10 X SPEED LIMIT
50-60	10 X SPEED LIMIT	10 X SPEED LIMIT

TAPER CRITERIA

TYPE OF TAPER	TAPER LENGTH
UPSTREAM TAPER:	
MERGING TAPER	L MINIMUM
SHIFTING TAPER	1/2 L MINIMUM
SHOULDER TAPER	1/2 L MINIMUM
TWO-WAY TRAFFIC TAPER	100 FEET MAXIMUM
DOWNSTREAM TAPERS	100 FEET PER LANE

TAPER LENGTH COMPUTATION

SPEED LIMIT	
40 MPH OR LESS	$L = \frac{WS^2}{60}$
40 MPH OR GREATER	$L = W \times S$

L = TAPER LENGTH
W = WIDTH OF OFFSET IN FEET
S = POSTED SPEED OR OFF-PEAK 85-PERCENTILE SPEED IN MPH

SIGN FACE DETAILS

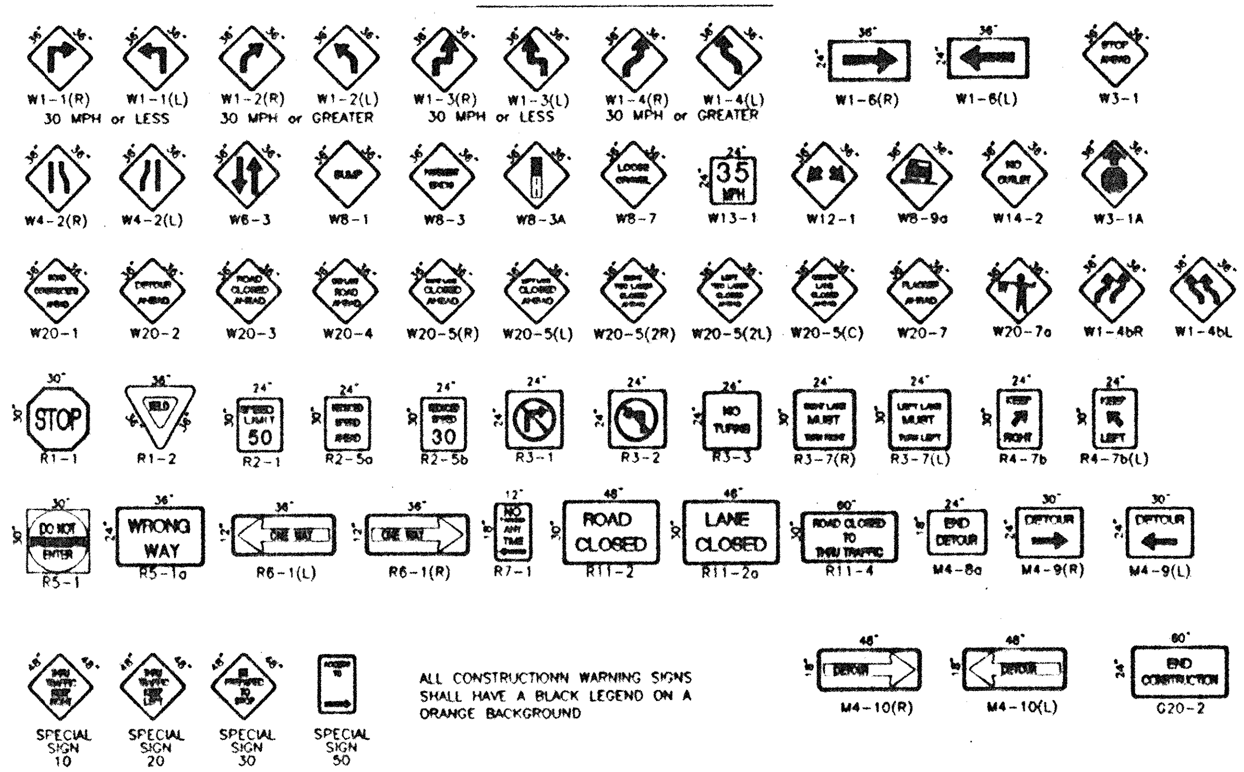

ALL CONSTRUCTIONN WARNING SIGNS SHALL HAVE A BLACK LEGEND ON A ORANGE BACKGROUND

AS-BUILT INFORMATION	
CONTRACTOR	
WORK STAKED BY	DATE
INSPECTOR'S ACCEPTANCE BY	DATE
FIELD VERIFICATION BY	DATE
DRAWINGS CORRECTED BY	DATE
MICRO-FILM INFORMATION	
RECORDED BY	DATE
NO.	

SURVEY INFORMATION	
FIELD NOTES	
1	ALS 3/94

BENCH MARKS

ACS BENCHMARK "5-M22", LOCATED 60.0' EAST OF MUNICIPAL LIMITS LINE, 77.9' SOUTHEAST OF POWER POLE SE #37 AND 186.0' NORTHWEST OF POWER POLE #60. A STANDARD ACS BRASS DISK SET IN CONCRETE, STAMPED "5-M22, 1975 ACS" (NGVD 1929) ELEVATION= 5594.518'

ENGINEER'S SEAL: COA STD DWG

REVISIONS				DESIGN
NO.	DATE	REMARKS	BY	
				DESIGNED BY GLD DATE 6/01
				DRAWN BY RFH DATE 2/01
				CHECKED BY FCA DATE 2/01

ISAACSON & ARFMAN, P.A.
Consulting Engineering Associates
128 Monroe Street N.E.
Albuquerque New Mexico
168TRF1.DWG/fh 06/06/01

CITY OF ALBUQUERQUE
PUBLIC WORKS DEPARTMENT
ENGINEERING GROUP

TITLE: FOUR HILLS VILLAGE--20TH INSTALLMENT
TRAFFIC CONTROL
SIGNING & CONSTRUCTION TRAFFIC CONTROL STANDARDS

Design Review Committee	City Engineer Approval	Last Design Update
COA	STD	

City Project No. 5038 | Zone Map No. M-22 | Sheet 22 Of 23

SCANNED BY
PLANNING

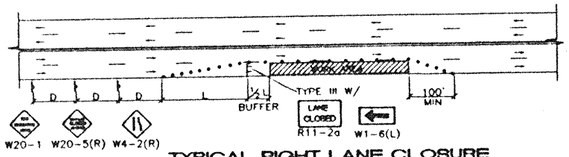

TYPICAL RIGHT LANE CLOSURE

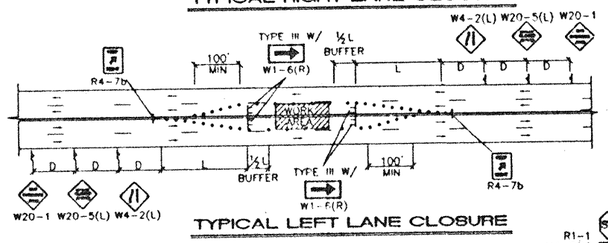

TYPICAL LEFT LANE CLOSURE

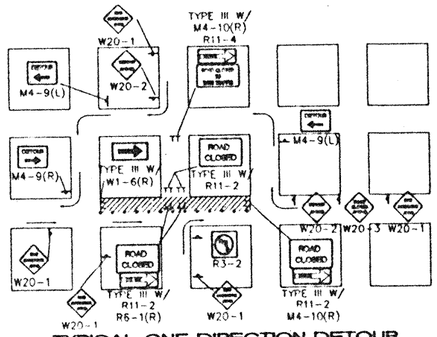

TYPICAL ONE DIRECTION DETOUR

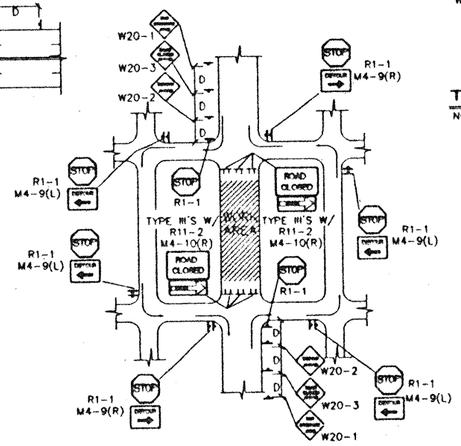

TYPICAL STREET CLOSURE

NOTE: (R1-1) BASED ON FIELD CONDITIONS.

NOTE:
MAY REQUIRE LEFT LANE CLOSURE DEPENDING ON FIELD CONDITIONS.

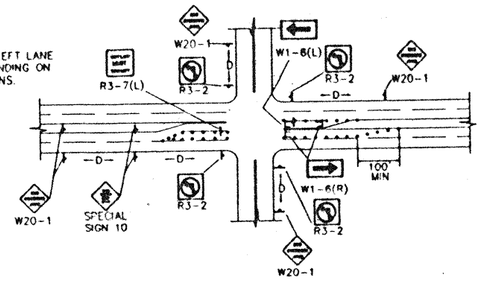

TYPICAL LANE CLOSURE AT INTERSECTION

NOTE: DEPENDING ON WORK ZONE LOCATION.

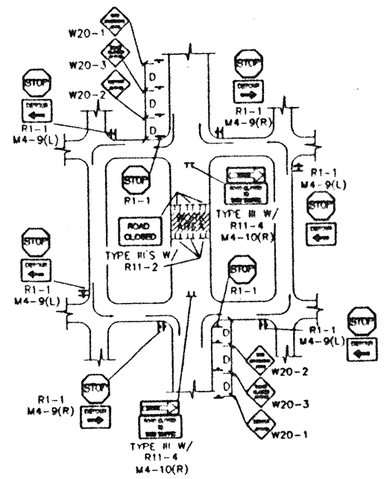

TYPICAL MID-BLOCK CLOSURE

NOTE: (R1-1) BASED ON FIELD CONDITIONS.

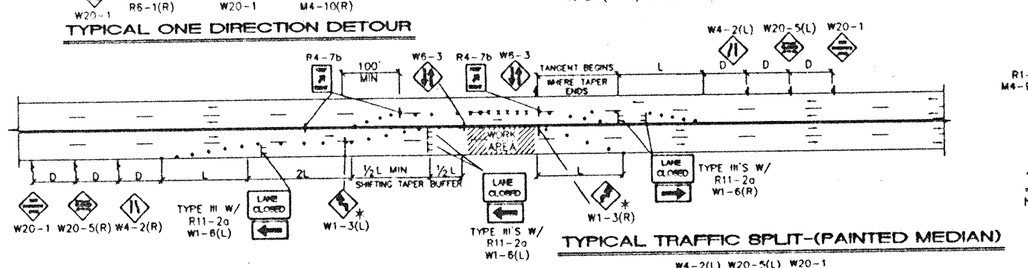

TYPICAL TRAFFIC SPLIT-(PAINTED MEDIAN)

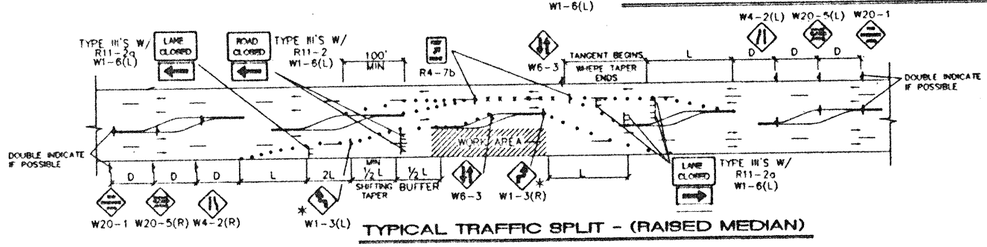

TYPICAL TRAFFIC SPLIT - (RAISED MEDIAN)

TRAFFIC SPLIT NOTES

1. THE OFFSET DISTANCE MUST BE CALCULATED IN ALL SHIFTING TAPERS. THE OFFSET DISTANCES SHALL INCLUDE LANE WIDTHS PLUS MEDIAN WIDTHS.
2. 1/2 L IS THE MINIMUM DISTANCE FOR SHIFTING TAPERS
3. REVERSE CURVES MAY BE IMPLEMENTED. ALL CURVE DATA SHALL BE CALCULATED.
4. MEDIAN REMOVAL SHALL BE REQUIRED IF 1/2 L OR REVERSE CURVE IS NOT SUFFICIENT. MEDIAN REMOVAL SHALL TAKE PLACE BEFORE SPLITS
5. REDUCED SPEED MAY BE CONSIDERED
6. * USE W1-3 FOR 30 MPH OR LESS, W1-4 FOR SPEED 35 MPH OR GREATER.

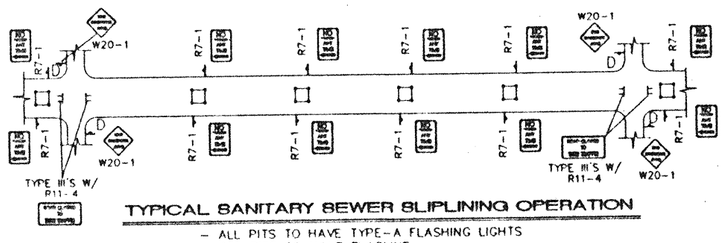

TYPICAL SANITARY SEWER SLIPLINING OPERATION

- ALL PITS TO HAVE TYPE-A FLASHING LIGHTS
- ALL PITS TO HAVE FLAGLINE

GENERAL NOTE:

ALL CONSTRUCTION WARNING SIGNS SHALL HAVE A BLACK LEGEND ON AN ORANGE BACKGROUND.

⚠ ALL ADVANCE WARNING SIGNS SHALL BE A MINIMUM OF 36" THIRTY SIX INCHES BY 36" THIRTY SIX INCHES IN SIZE AND SHALL HAVE ONE WARNING LIGHT.

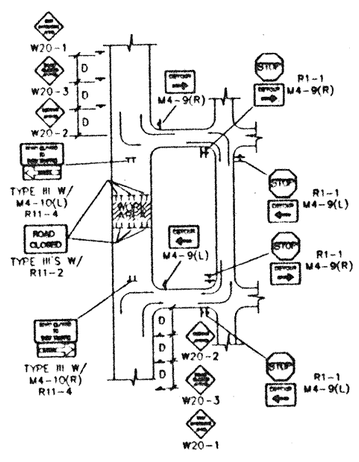

TYPICAL STREET CLOSURE

NOTE: (R1-1) BASED ON FIELD CONDITIONS.

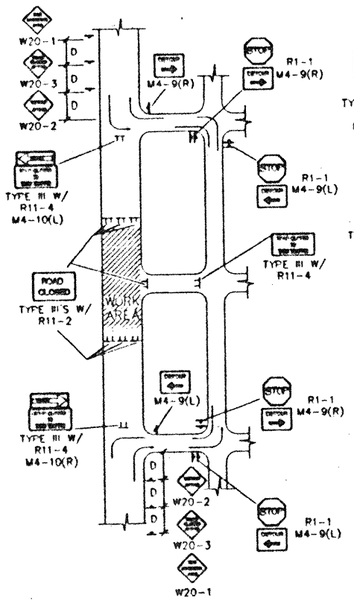

TYPICAL STREET CLOSURE

NOTE: (R1-1) BASED ON FIELD CONDITIONS.

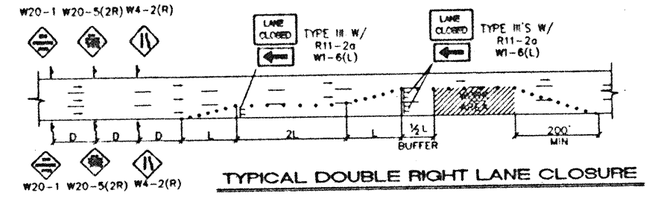

TYPICAL DOUBLE RIGHT LANE CLOSURE

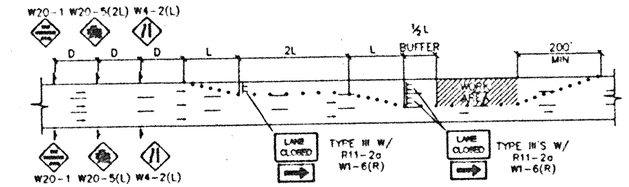

TYPICAL DOUBLE LEFT LANE CLOSURE

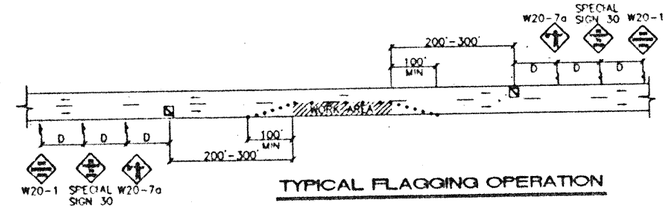

TYPICAL FLAGGING OPERATION

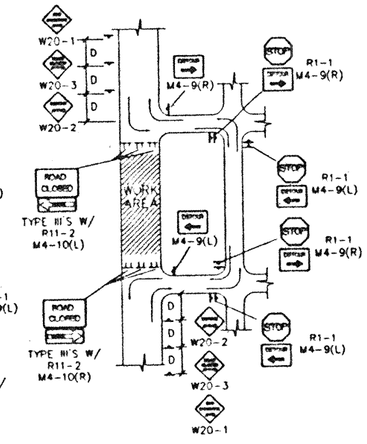

TYPICAL STREET CLOSURE

NOTE: (R1-1) BASED ON FIELD CONDITIONS.

AS-BUILT INFORMATION

CONTRACTOR | WORK STARTED BY | DATE | WORK FINISHED BY | DATE | FIELD VERIFICATION BY | DATE | DRAWINGS CORRECTED BY | DATE

MICRO-FILM INFORMATION

RECEIVED BY | DATE | MF

BENCH MARKS

ACS BENCHMARK "5-M22", LOCATED 60.0' EAST OF MUNICIPAL LIMITS LINE, 77.9' SOUTHEAST OF POWER POLE SE #37 AND 186.0' NORTHWEST OF POWER POLE #60 A STANDARD ACS BRASS DISK SET IN CONCRETE, STAMPED "5-M22, 1975 ACS" (NGVD 1929)
ELEVATION= 5594.518'

SURVEY INFORMATION

FIELD NOTES

1 | ALS | 3/94

ENGINEER'S SEAL

COA
STD
DWG

NO	DATE	REMARKS	BY
		REVISIONS	

DESIGNED BY GLD DATE 6/01
DRAWN BY RFH DATE 2/01
CHECKED BY F.T.A. DATE 2/01

ISAACSON & ARFMAN, P.A.
Consulting Engineering Associates
128 Monroe Street N.E.
Albuquerque New Mexico
168.TMP 2 DWG.fh 06/06/01

CITY OF ALBUQUERQUE
PUBLIC WORKS DEPARTMENT
ENGINEERING GROUP

TITLE: FOUR HILLS VILLAGE--20TH INSTALLMENT
TRAFFIC CONTROL
TRAFFIC CONTROL & SIGNING EXAMPLES

Design Review Committee	City Engineer Approval	Last Design Update	Mo./Day/Yr	Mo./Day/Yr
COA	STD			

City Project No 5038 | Zone Map No M-22 | Sheet 23 Of 23