CONSTRUCTION PLANS

FOR

MONTANO ROAD AND CULTURE DRIVE INTERSECTION IMPROVEMENTS

ALBUQUERQUE, NEW MEXICO

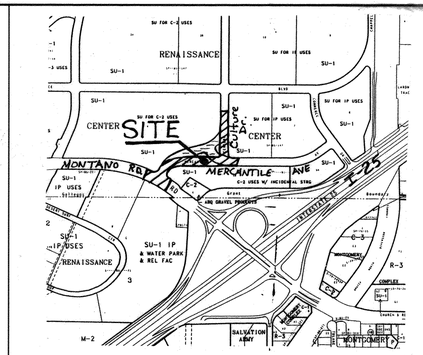

VICINITY MAP — ZONE ATLAS F-16-Z — SCALE: NONE

GENERAL NOTES

NOTICE TO CONTRACTORS

1. CITY OF ALBUQUERQUE SPECIFICATIONS FOR PUBLIC WORKS CONSTRUCTION, 1986 EDITION AS AMENDED THROUGH UPDATE 6, WILL BE REFERRED TO HEREIN AS THE "STANDARD SPECIFICATIONS".
2. TWO WORKING DAYS PRIOR TO ANY EXCAVATION, CONTRACTOR MUST CONTACT NEW MEXICO ONE CALL SYSTEM (260-1990) AND DETERMINE LOCATION OF EXISTING UTILITIES.
3. PRIOR TO ANY CONSTRUCTION, THE CONTRACTOR SHALL EXCAVATE AND VERIFY THE HORIZONTAL AND VERTICAL LOCATIONS OF ALL OBSTRUCTIONS. SHOULD A CONFLICT EXIST, THE CONTRACTOR SHALL NOTIFY THE ENGINEER OR THE SURVEYOR SO THAT THE CONFLICT CAN BE RESOLVED WITHOUT DELAY.
4. ALL EXISTING SIGNS, MARKERS, DELINEATORS, ETC., WITHIN THE CONSTRUCTION LIMITS SHALL BE REMOVED, STORED AND RE-SET BY THE CONTRACTOR.
5. THE CONTRACTOR SHALL NOTIFY THE ENGINEER NOT LESS THAN SEVEN (7) PRIOR TO STARTING WORK IN ORDER THAT THE ENGINEER MAY TAKE NECESSARY MEASURES TO INSURE THE PRESERVATION OF SURVEY MONUMENTS. CONTRACTOR SHALL NOT DISTURB PERMANENT SURVEY MONUMENTS WITHOUT THE CONSENT OF THE ENGINEER AND SHALL NOTIFY THE ENGINEER AND BEAR THE EXPENSE OF REPLACING ANY THAT MAY BE DISTURBED WITHOUT PERMISSION. REPLACEMENT SHALL BE DONE ONLY BY THE CITY SURVEYOR. WHEN A CHANGE IS MADE IN THE FINISHED ELEVATIONS OF THE PAVEMENT OF ANY ROADWAY IN WHICH A PERMANENT SURVEY MONUMENT IS LOCATED, CONTRACTOR SHALL, AT HIS OWN EXPENSE, ADJUST THE MONUMENT COVER TO THE NEW GRADE UNLESS OTHERWISE SPECIFIED. REFER TO SECTION 4.4 OF THE GENERAL CONDITIONS OF THE STANDARD SPECIFICATIONS.
6. THREE (3) WORKING DAYS PRIOR TO BEGINNING CONSTRUCTION THE CONTRACTOR SHALL SUBMIT TO THE CONSTRUCTION CO-ORDINATION DIVISION A DETAILED CONSTRUCTION SCHEDULE. TWO (2) WORKING DAYS PRIOR TO CONSTRUCTION THE CONTRACTOR SHALL OBTAIN A BARRICADING PERMIT FROM THE CONSTRUCTION CO-ORDINATION DIVISION. CONTRACTOR SHALL NOTIFY BARRICADE ENGINEER (768-2551) PRIOR TO OCCUPYING AN INTERSECTION.
7. ANY WORK OCCURRING WITHIN AN ARTERIAL ROADWAY REQUIRES 24 HOURS CONSTRUCTION.

THE FOLLOWING NOTES ALSO APPLY WHEN CHECKED

- [x] ALL UTILITIES AND UTILITY SERVICE LINES SHALL BE INSTALLED PRIOR TO PAVING.
- [x] BACKFILL COMPACTION SHALL BE ACCORDING TO SPECIFIED STREET USE.
- [ ] TACK COAT REQUIREMENTS SHALL BE DETERMINED BY THE CITY ENGINEER.
- [x] SIDEWALK AND WHEELCHAIR RAMPS WITHIN THE CURB RETURNS SHALL BE CONSTRUCTED WHEREVER A NEW CURB RETURN IS CONSTRUCTED.
- [ ] IF CURB IS DEPRESSED FOR A DRIVEPAD, THE DRIVEPAD SHALL BE CONSTRUCTED PRIOR TO ACCEPTANCE OF CURB AND GUTTER.
- [x] ALL STORM DRAINAGE FACILITIES SHALL BE COMPLETED PRIOR TO FINAL ACCEPTANCE.
- [x] THE REQUESTOR OR DEVELOPER SHALL BE RESPONSIBLE FOR REPAIR OR REPLACEMENT OF ALL CURB AND GUTTER OR SIDEWALK DAMAGE AFTER APPROVAL BY THE CITY ENGINEER OR WORK COMPLETED BY THE CONTRACTOR.

NOTE:
THE IMPROVEMENTS SHOWN HEREIN SHALL BE CONSTRUCTED BUT NOT OPENED UNTIL WARRANTED. SIGNALS SHALL BE UNOPERATIVE UNTIL WARRANTED.

CAUTION:
NOTE THAT ALL EXISTING UTILITIES MAY NOT BE SHOWN. ALL EXISTING SERVICE CONNECTIONS ARE NOT SHOWN. ANY EXISTING UTILITIES THAT ARE SHOWN ARE APPROXIMATE LOCATION ONLY. IT SHALL BE THE SOLE RESPONSIBILITY OF THE CONTRACTOR TO CONTACT ALL THE UTILITY OWNERS AND TO CONDUCT ALL NECESSARY FIELD INVESTIGATIONS PRIOR TO ANY EXCAVATIONS TO DETERMINE THE ACTUAL LOCATION OF UTILITIES AND OTHER IMPROVEMENTS.

LEGEND

CURB AND GUTTER	WATER METER
CONCRETE	CABLE T.V.
ELECTRIC TRANSFORMER	POWER POLE
ELECTRIC PANEL	ANCHOR
SANITARY SEWER MANHOLE	LIGHT POLE
TELEPHONE MANHOLE	TRAFFIC LIGHT
ELECTRIC MANHOLE	CROSSWALK SIGNAL
STORM SEWER MANHOLE	SPRINKLER CONTROL
WATER VALVE	TRAFFIC CONTROL
FIRE HYDRANT	LIGHTING BOX
TELEPHONE BOX	SIGN
SPOT ELEVATION	GRATE

INDEX TO DRAWINGS

SHEET NO.	SHEET
1	TITLE SHEET
2-4	PAVING IMPROVEMENTS
5	INTERSECTION LAYOUT & DETAILS
6	TRAFFIC STRIPING PLAN
7	TRAFFIC SIGNAL PLAN
8	CONDUIT & CABLE REQUIREMENT CHARTS
9-17	TRAFFIC SIGNAL DETAILS
18	TRAFFIC SIGNAL & DETECTOR FUNCTION CHARTS
19	ESTIMATED QUANTITIES

1 2 3 4 5 6 7 8 9 10 11 12 13 14 15
26-5358.90 0197

APPROVAL OF AS BUILT DRAWINGS
CHIEF CONSTRUCTION ENGINEER
DATE 5-7-97

SURVEYOR'S CERTIFICATION

"I, Timothy Aldrich, a duly qualified Registered Professional Land Surveyor under the laws of the State of New Mexico, do hereby certify that the 'as-built' information shown on these drawings was obtained from field construction and 'as-built' surveys performed by me or under my supervision, that the 'as-built' information shown on these drawings was added by me or under my supervision, and that this 'as-built' information is true and correct to the best of my knowledge and belief." Aldrich Land Surveying is not responsible for any of the design concepts, calculations, engineering, or intent of the record drawings.

Timothy Aldrich, P.S. No. 7719 — Date 12-21-96

dmg D. MARK GOODWIN & ASSOCIATES, P.A.
CONSULTING ENGINEERS & SURVEYORS
P. O. BOX 90606
ALBUQUERQUE, NEW MEXICO 87199
(505) 345-2010

REV.	SHEETS	CITY ENGINEER	DATE	USER DEPARTMENT	DATE	USER DEPARTMENT	DATE

ENGINEERS STAMP & SIGNATURE	APPROVALS	ENGINEER	DATE	APPROVED FOR CONSTRUCTION
D. MARK GOODWIN NEW MEXICO 8948 REGISTERED PROFESSIONAL ENGINEER 4/24/96	DRC CHAIRMAN	Billy J. Gaylor	6-25-96	
	TRANSPORTATION	[illegible]	4-30-96	
	WATER/WASTEWATER	John Stump III	5-15-96	
	HYDROLOGY	John Wilson	5-1-96	
	PARKS			
	CONSTR. MNGMT.			
	CITY PROJECT NO. 5358.90			CITY ENGINEER — DATE 5/2/96
				SHEET 1 OF 19

MERC\TITLE

CL CURVE DATA

① Δ = 61°54'08"	② Δ = 89°59'50"
R = 300.00'	R = 400.00'
L = 324.12'	L = 628.30'
T = 179.91'	T = 399.98'

CURVE DATA – DESCRIBES FACE OF CURB

① Δ = 76°57'10"	② Δ = 90°33'13"	③ Δ = 96°11'56"	④ Δ = 06°04'39"	⑤ Δ = 10°25'11"
R = 100.00'	R = 369.00'	R = 50.00'	R = 227.50'	R = 269.00'
L = 134.31'	L = 583.19'	L = 83.95'	L = 24.13'	L = 48.92'
T = 79.48'	T = 372.58'	T = 55.72'	T = 12.08'	T = 24.53'
⑥ Δ = 29°41'46"	⑦ Δ = 03°52'59"	⑧ Δ = 84°43'42"	⑨ Δ = 84°05'02"	⑩ Δ = 22°43'19"
R = 300.00'	R = 443.00'	R = 25.00'	R = 25.00'	R = 431.00'
L = 155.49'	L = 30.02'	L = 36.97'	L = 36.69'	L = 170.92'
T = 79.53	T = 15.02'	T = 22.80'	T = 22.54'	T = 86.60'
⑪ Δ = 80°49'42"	⑫ Δ = 86°01'08"	⑬ Δ = 38°03'33"		
R = 25.00'	R = 25.00'	R = 431.00'		
L = 35.27'	L = 37.53'	L = 286.30'		
T = 21.29'	T = 23.32'	T = 148.65'		

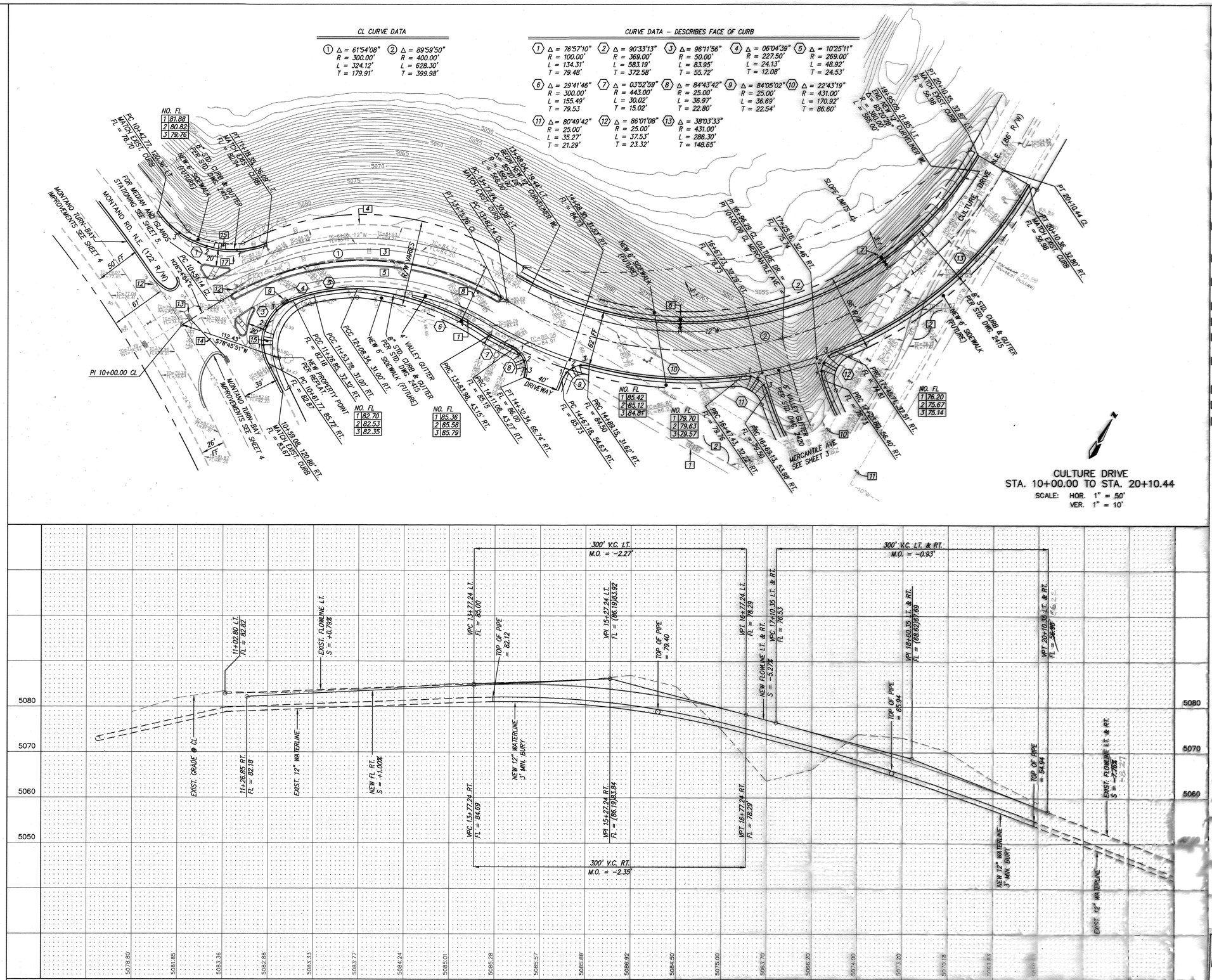

KEYED NOTES

1. 4 water meters with boxes for existing landscaping to be removed.
2. Remove all curb and gutter and paving where existing street falls behind new street. All irrigation to be removed and capped outside new paving area.
3. Remove existing median and all landscaping. Remove all irrigation system and lines, and cap outside of new paving areas.
4. Existing curb and gutter and paving west side of existing median is to remain.
5. Existing curb and gutter and paving east side of existing median is to be removed.
6. Relocate existing fire hydrant to centerline station 15+80. Flange = 83.60. Provide 6" gate valve with type "A" valve box.
7. Relocate existing fire hydrant to centerline station 18+38. Flange = 70.20. Provide 6" gate valve with type "A" valve box.
8. Relocate existing fire hydrant to centerline station 13+36. Flange = 85.63. Adjust valve boxes as necessary.
9. Relocate existing drop inlet to new curb. Extend service line to new inlet.
10. Existing 12" PVC waterline to be relocated 11 ft. off new west face of curb.
11. Existing 10" PVC waterline to remain.
12. Adjust manhole rims as necessary.
13. Remove existing inlet and build new 4' manhole type E. Rim = 80.05 Inv. = 74.62
14. New 56 L.F. 18" Class III RCP from new inlet to new manhole. New Grate = 81.06 New Inv. = 78.06. Slope = 6.14%
15. All wheelchair ramps per city standard drawing 2441.
16. All new sidewalks per city standard drawing 2430.
17. Remove existing curb & gutter outside of new curb & gutter.

GENERAL NOTES

1. All stationing is centerline stationing.
2. Adjust all manhole rims and valve boxes as necessary.
3. All water meter boxes to be removed and lines capped behind new paving.
4. For typical street section, see sht. 3

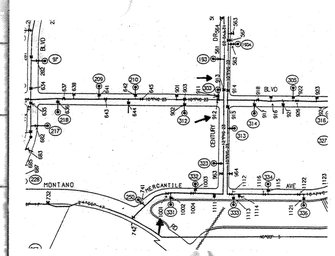

VALVE SHUT-OFF PLAN — MAP NO. F-16

WATERLINE CONNECTION IN CULTURE DR.

1. TO CONNECT NEW 12" WATERLINE TO EXISTING 12" WATERLINE IN CULTURE DR., VALVES NO. 1001, 913, & 912 WILL HAVE TO BE CLOSED.
2. CONTRACTOR WILL CONTACT WATER SYSTEMS AT 857-8200, (3) DAYS PRIOR TO NECESSARY SHUT-OFF.
3. VALVES SHALL ONLY BE OPERATED BY CITY WATER EMPLOYEES.

D. MARK GOODWIN & ASSOCIATES, P.A.
CONSULTING ENGINEERS & SURVEYORS
P.O. BOX 90606
ALBUQUERQUE, NEW MEXICO 87199
(505) 345-2010

CITY OF ALBUQUERQUE
PUBLIC WORKS DEPARTMENT
ENGINEERING DEVELOPMENT GROUP

TITLE: MONTANO RD. AND CULTURE DR. INTERSECTION PAVING IMPROVEMENTS CULTURE DRIVE

APPROVED JUN 25 1996 DESIGN REVIEW COMMITTEE

CITY ENGINEER — DATE — MO./DAY/YR

CITY PROJECT NO. 5726.90 — MAP NO. F16 — SHEET 2 OF 19

26-5350.90 0297

AS BUILT INFORMATION
CONTRACTOR: Lembke Plus — DATE
WORK STAKED BY: SLS — DATE
INSPECTOR'S CHANGE BY: — DATE
FIELD VERIFICATION BY: AS — DATE 7/6
DRAWING CORRECTED BY: AS — DATE 8/12
MICRO-FILM INFORMATION
RECORDED BY: — DATE
NO.

BENCH MARKS
BRASS TABLET STAMPED "STA. 1-25-20", IN TOP OF CONCRETE POST. LOCATED 0.50 MILES SOUTH OF MONTANO RD. ON WEST FRONTAGE RD. TO THE RIGHT.
X = 390403.88
Y = 1502304.95
Z = 5079.46

SURVEY INFORMATION
FIELD NOTES
NO. — BY — DATE

ENGINEER'S SEAL
D. MARK GOODWIN — NEW MEXICO — REGISTERED PROFESSIONAL ENGINEER — 8894

NO.	DATE	REMARKS / REVISIONS	BY

DESIGNED BY: DMG — DATE 05/96
DRAWN BY: DRD/MGS — DATE 05/96
CHECKED BY: DMG — DATE 05/96

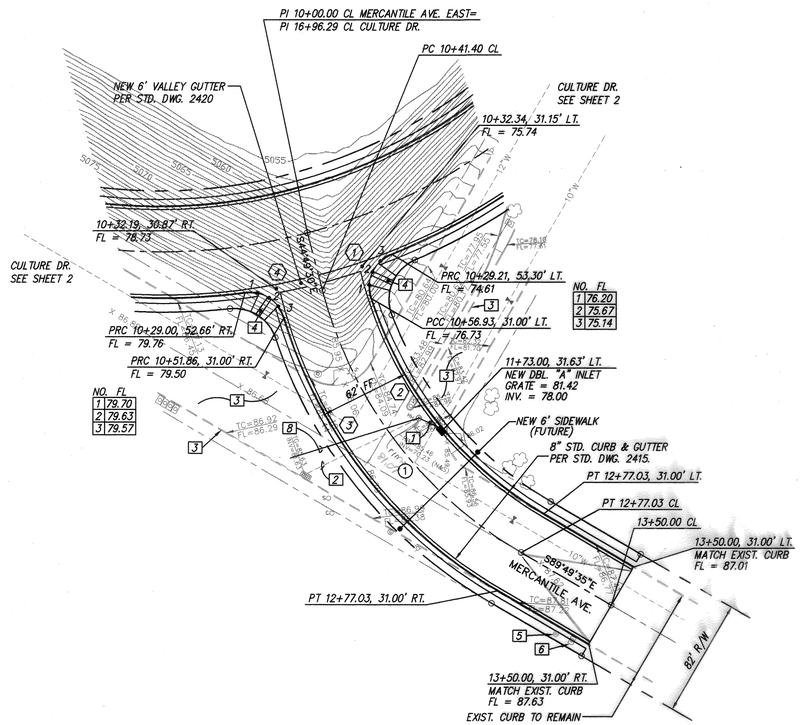

CURVE DATA – DESCRIBES FACE OF CURB

1	Δ = 86°01'08"	R = 25.00'	L = 37.53'	T = 23.32'
2	Δ = 42°02'06"	R = 269.00'	L = 197.35'	T = 103.35'
3	Δ = 43°00'16"	R = 331.00'	L = 248.44'	T = 130.40'
4	Δ = 80°49'42"	R = 25.00'	L = 35.27'	T = 21.29'

CL CURVE DATA

1 Δ = 45°00'05"
R = 300.00'
L = 235.63'
T = 124.27'

MERCANTILE AVENUE
STA. 10+00.00 TO STA. 12+77.03

SCALE: HOR. 1" = 50'
VER. 1" = 10'

KEYED NOTES

1. New 15 L.F. 18" Class III RCP.
2. Remove existing inlet and lateral.
3. Remove all paving, curb, landscaping, and irrigation. Cap irrigation outside of new curb. Adjust valves as necessary and build new collars.
4. All new wheelchair ramps per city standard drawing 2441.
5. Remove and dispose of existing street light base.
6. Adjust existing water meter as necessary.
7. New sidewalks per city standard drawing 2430.
8. New 94.09 L.F. 12" class III RCP at 1.83% S42°34'40"W with plug. Inv.= 73.45.

GENERAL NOTES

1. All stationing is centerline stationing.
2. For typical street section, see sht. 5.

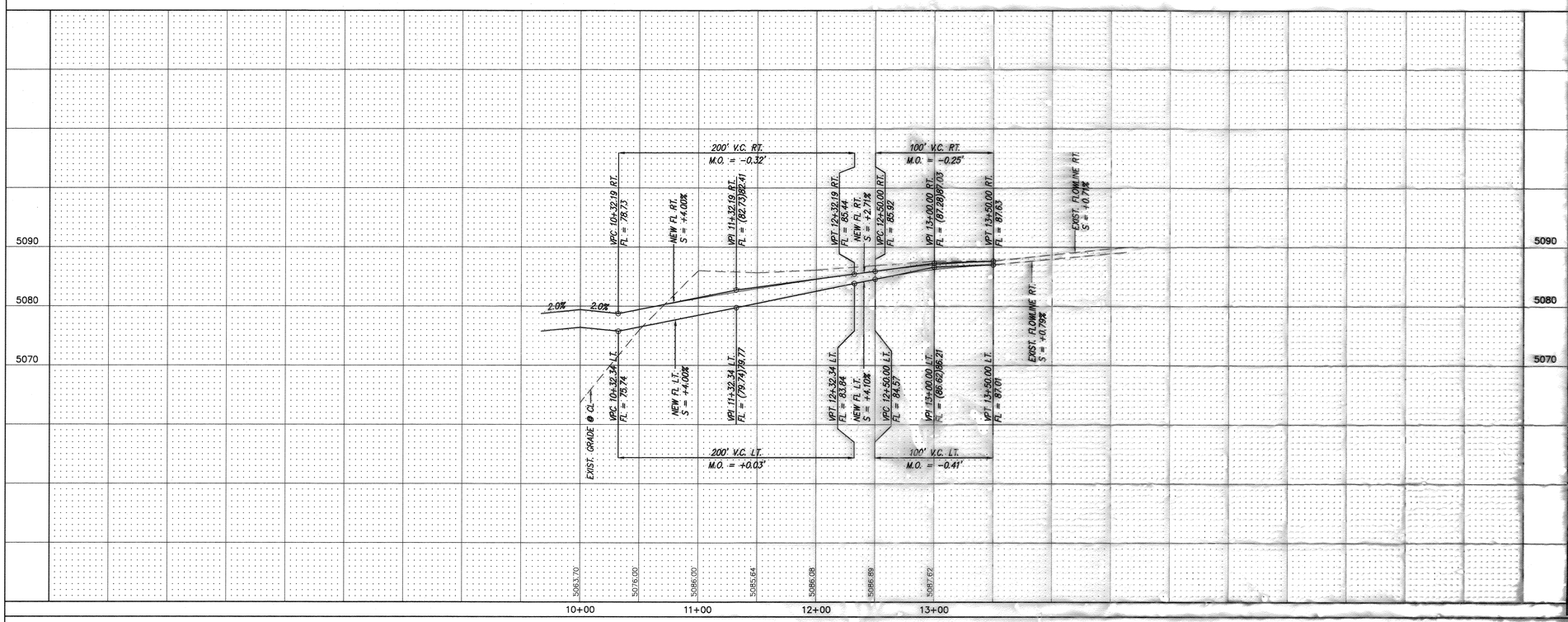

AS BUILT INFORMATION
CONTRACTOR: HERMANOS
WORK STAKED BY: AS DATE: 96
INSPECTOR'S ACCEPTANCE BY: DATE: 96
FIELD VERIFICATION BY: AS DATE:
DRAWINGS CORRECTED BY: AS DATE: 96
MICRO-FILM INFORMATION
RECORDED BY: DATE:
NO.

BENCH MARKS
BRASS TABLET STAMPED "STA. I-25-20", IN TOP OF CONCRETE POST. LOCATED 0.50 MILES SOUTH OF MONTANO RD. ON WEST FRONTAGE RD. TO THE RIGHT.
X = 380403.88
Y = 1502304.95
Z = 5076.46

SURVEY INFORMATION
FIELD NOTES
NO. | BY | DATE

ENGINEER'S SEAL
D. MARK GOODWIN NEW MEXICO 10949 REGISTERED PROFESSIONAL ENGINEER
2/21/96

REVISIONS
NO. | DATE | BY | REMARKS

DESIGN
DESIGNED BY: DMG DATE: 02/96
DRAWN BY: DBC/MCG DATE: 02/96
CHECKED BY: DMG DATE: 02/96

D. MARK GOODWIN & ASSOCIATES, P.A.
CONSULTING ENGINEERS & SURVEYORS
P.O. BOX 9[illegible]
ALBUQUERQUE, NEW MEXICO 87199
(505) 34[illegible]

CITY OF ALBUQUERQUE
PUBLIC WORKS DEPARTMENT
ENGINEERING GROUP
DEVELOPMENT

TITLE: MO[illegible] RD. [illegible] CULTURE DR. INTERSECTION IMPROVEMENTS [illegible]TILE AVE.

MO./DAY/YR.

DESIGN REVIEW COMMITTEE
APPROVED
JUN 25 199[illegible]
DESIGN REVIEW COMMITTEE

SHEET 3 OF 19

2d-5356.pd 0307

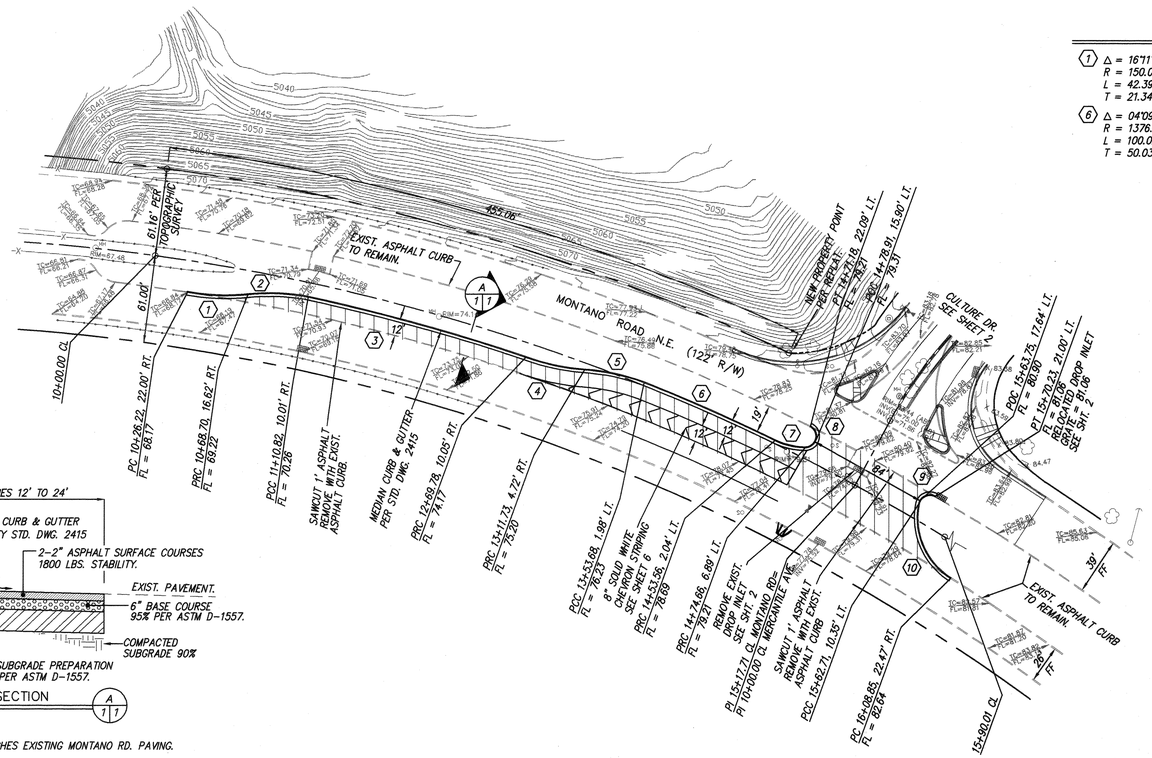

CURVE DATA – DESCRIBES FACE OF CURB

1 Δ = 16°11'32" R = 150.00' L = 42.39' T = 21.34'	2 Δ = 16°11'32" R = 150.00' L = 42.39' T = 21.34'	3 Δ = 06°22'05" R = 1420.14' L = 157.84' T = 79.00'	4 Δ = 16°07'30" R = 150.00' L = 42.22' T = 21.25'	5 Δ = 16°16'00" R = 150.00' L = 42.59' T = 21.44'
6 Δ = 04°09'52" R = 1376.14' L = 100.02' T = 50.03'	7 Δ = 25°04'27" R = 50.00' L = 21.88' T = 11.12'	8 Δ = 154°24'46" R = 8.00' L = 21.56' T = 35.23'	9 Δ = 109°38'04" R = 8.00' L = 15.31' T = 11.35'	10 Δ = 68°44'50" R = 50.00' L = 59.99' T = 34.20'

CL CURVE DATA

1 Δ = 23°36'01"
R = 1432.40'
L = 590.01'
T = 299.25'

GENERAL NOTES

1. All stationing is centerline stationing.

MONTANO RD. TURN-BAY
STA. 10+00.00 TO STA. 16+09.88
SCALE: HOR. 1" = 50'
VER. 1" = 10'

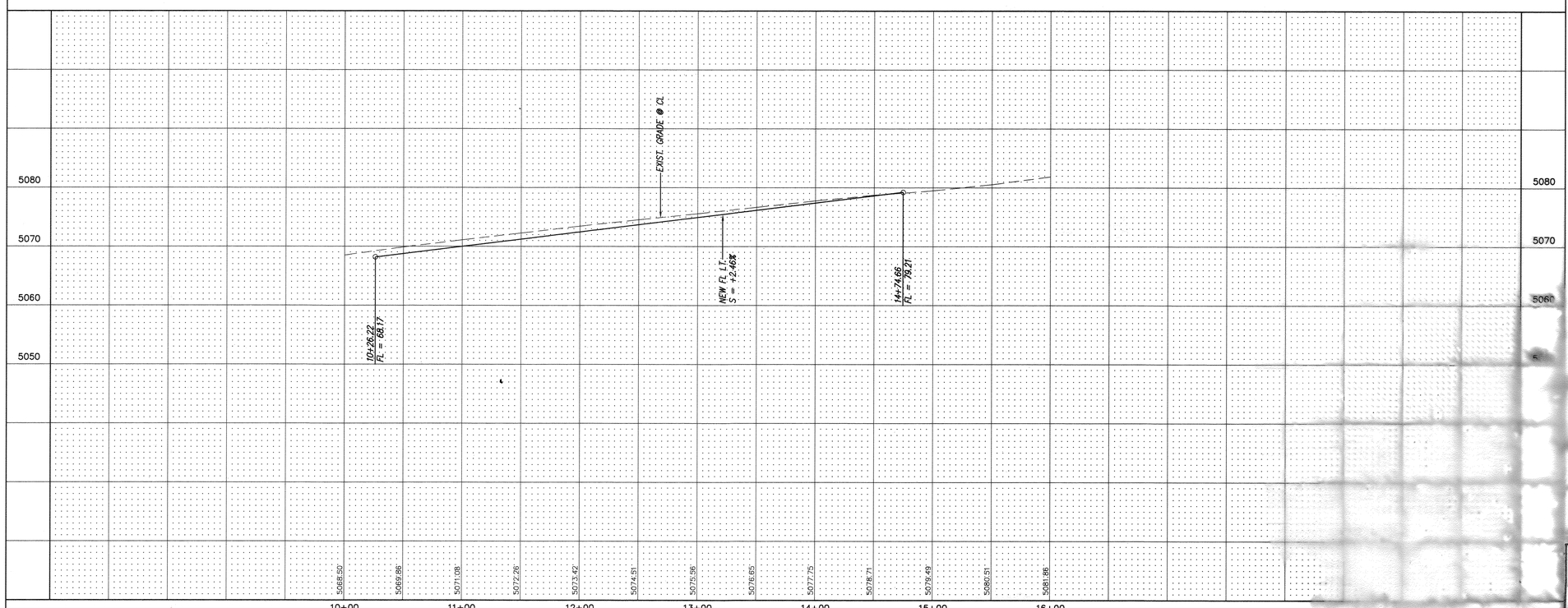

AS BUILT INFORMATION
CONTRACTOR: HEBRUNS DATE 96
WORK STAKED BY: AS DATE
INSPECTOR: AS DATE 96
ACCEPTED: DATE
FIELD VERIFICATION BY: AS DATE 96
DRAWINGS CORRECTED BY: AS DATE 96
MICRO-FILM INFORMATION
RECORDED BY DATE
NO.

BENCH MARKS
BRASS TABLET STAMPED "STA. I-25-20", IN TOP OF CONCRETE POST. LOCATED 0.50 MILES SOUTH OF MONTANO RD. ON WEST FRONTAGE RD. TO THE RIGHT.
X = 380403.88
Y = 1502304.95
Z = 5079.46

SURVEY INFORMATION
FIELD NOTES
NO. BY DATE

ENGINEER'S SEAL
D. MARK GOLDBERG NEW MEXICO 9840 REGISTERED PROFESSIONAL ENGINEER

NO. DATE REVISIONS BY
DESIGNED BY DMG DATE 02/96
DRAWN BY DBC/MCG DATE 02/96
CHECKED BY DMG DATE 02/96

26-5358.90 0497

CITY OF ALBUQUERQUE
PUBLIC WORKS DIVISION
ENGINEERING

MONTANO RD. AND CULTURE DR. INTERSECTION
PAVING IMPROVEMENTS
MONTANO ROAD TURN BAY

DESIGN REVIEW COMMITTEE | CITY ENGINEER | LAST REVISION | NO. DAY/YR.
APPROVED JUN 25 1996 DESIGN REVIEW COMMITTEE

CITY PROJECT NO. 5358.90 | ZONE MAP NO. F16 | SHEET 4 OF 19

MERC\FP-4

CURVE DATA – DESCRIBES FACE OF CURB

① Δ = 178°31'20" R = 3.00' L = 9.50' T = 232.62'	② Δ = 59°33'33" R = 294.00' L = 305.61' T = 168.24'	③ Δ = 178°50'33" R = 3.00' L = 9.49' T = 296.99'	④ Δ = 89°12'20" R = 10.00' L = 15.57' T = 9.86'	⑤ Δ = 135°15'45" R = 4.00' L = 9.44' T = 9.72'
⑥ Δ = 11°51'30" R = 120.00' L = 24.84' T = 12.46'	⑦ Δ = 150°02'00" R = 2.00' L = 5.24' T = 7.47'	⑧ Δ = 02°38'35" R = 324.00' L = 14.95' T = 7.47'	⑨ Δ = 04°03'02" R = 240.00' L = 16.97' T = 8.49'	⑩ Δ = 152°13'10" R = 2.00' L = 5.31' T = 8.09'
⑪ Δ = 21°15'41" R = 70.00' L = 25.98' T = 13.14'	⑫ Δ = 139°43'41" R = 4.00' L = 9.75' T = 10.91'	⑬ Δ = 85°15'49" R = 10.00' L = 14.88' T = 9.21'	⑭ Δ = 61°54'08" R = 300.00' L = 324.12' T = 179.91'	

CL CURVE DATA

① Δ = 61°54'08"
R = 300.00'
L = 324.12'
T = 179.91'

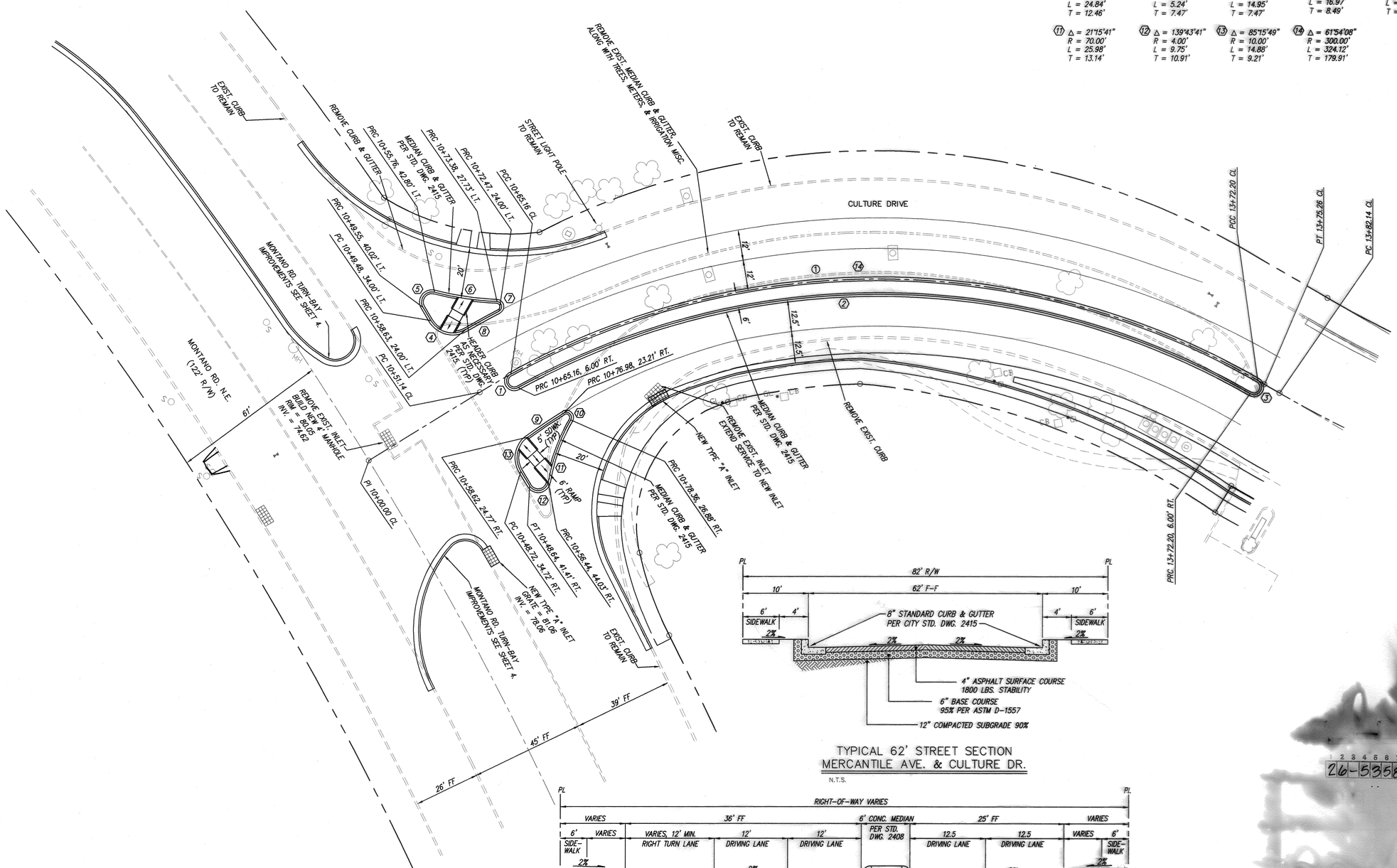

TYPICAL 62' STREET SECTION
MERCANTILE AVE. & CULTURE DR.

N.T.S.

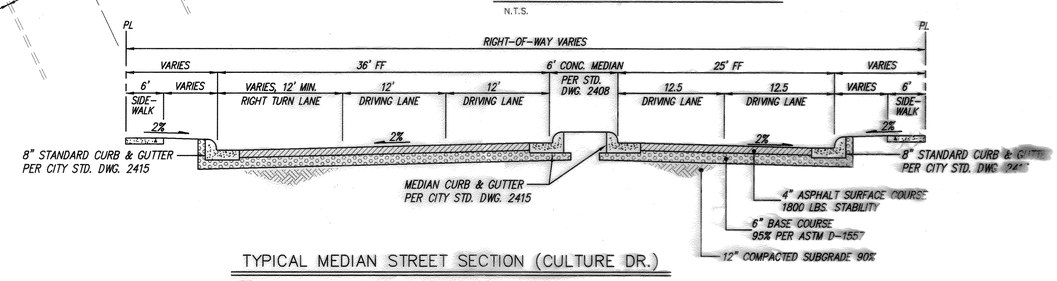

TYPICAL MEDIAN STREET SECTION (CULTURE DR.)

N.T.S.

AS BUILT INFORMATION
CONTRACTOR: [illegible] DATE 9/2
WORK STAKED BY: ALS DATE
INSPECTOR'S FINAL CHECK BY: ALS DATE 9/2
FIELD VERIFICATION BY: ALS DATE 9/2
DRAWINGS CORRECTED BY: ALS DATE 9/2
MICRO-FILM INFORMATION
RECORDED BY DATE
NO.

BENCH MARKS
BRASS TABLET STAMPED "STK. 1-25-20", IN TOP OF CONCRETE POST. LOCATED 0.50 MILES SOUTH OF MONTANO RD. ON WEST FRONTAGE RD. TO THE RIGHT.
X = 390403.89
Y = 1502304.95
Z = 5079.46

SURVEY INFORMATION
FIELD NOTES

NO.	BY	DATE

ENGINEER'S SEAL
D. MARK GOODWIN NEW MEXICO 9966 REGISTERED PROFESSIONAL ENGINEER 9/12/96

NO.	DATE	REVISIONS	BY

		DATE
DESIGNED BY:	DMG	02/96
DRAWN BY:	DMG	02/96
CHECKED BY:	DMG	02/96

1 2 3 4 5 6 7 8 9 10 11 12 13 14 15
26-5358.90 0597

[illegible] GROUP

[illegible] DR. INTERSECTION
LAYOUT & DETAILS
[illegible] RD. & CULTURE DR.

CITY ENGINEER APPROVAL — MO./DAY/YR. — MO./DAY/YR.

APPROVED JUN 25 1996 DESIGN REVIEW COMMITTEE

CITY PROJECT NO. 5358.90 | ZONE MAP NO. F-16 | SHEET 5 OF 19

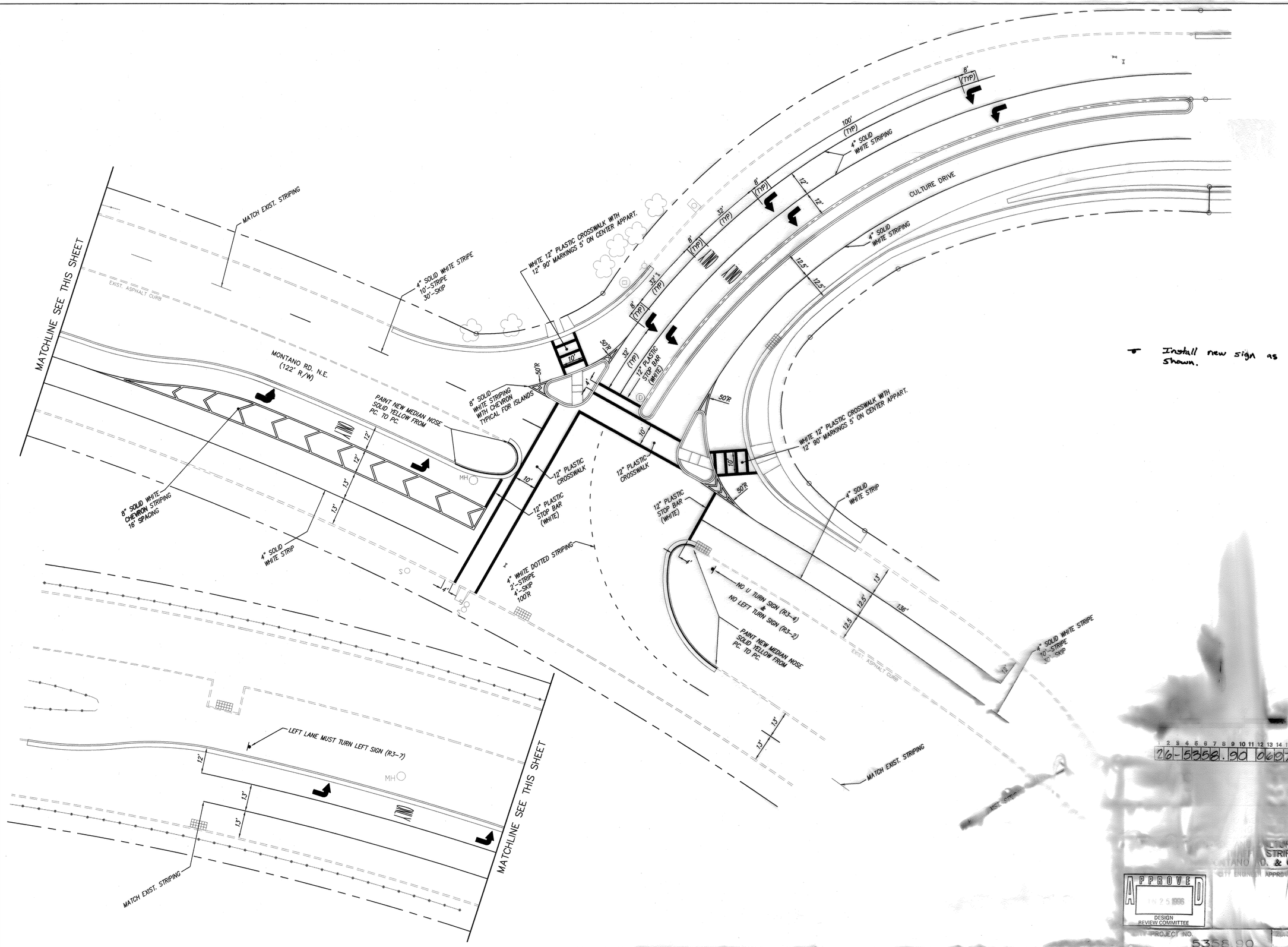

AS BUILT INFORMATION
CONTRACTOR: Thompkins
WORK STAKED BY: ALS DATE: 10
INSPECTOR'S ACCEPTANCE BY: DATE:
FIELD VERIFICATION BY: ALS DATE: 10/10
DRAWINGS CORRECTED BY: ALS DATE: 10/10
MICRO-FILM INFORMATION
RECORDED BY: DATE:
NO.

BENCH MARKS:
BRASS TABLET STAMPED "STA. I-25-20", IN TOP OF CONCRETE POST. LOCATED 0.50 MILES SOUTH OF MONTANO RD. ON WEST FRONTAGE RD. TO THE RIGHT.
X = 380403.88
Y = 1502304.95
Z = 5079.46

SURVEY INFORMATION
FIELD NOTES

NO.	BY	DATE

D. MARK GOODWIN
NEW MEXICO
9848
REGISTERED PROFESSIONAL ENGINEER
4/29/96

NO.	DATE	DESCRIPTION	BY
	02/96		
	02/96		
	02/96		

DESIGNED BY:
DRAWN BY:
CHECKED BY:

26-5358.90 0697

[illegible] GROUP
[illegible] DR. INTERSECTION
[illegible] STRIPING PLAN
[illegible] RD. & CULTURE DR.
CITY ENGINEER APPROVAL
MO./DAY/YR. MO./DAY/YR.

APPROVED
JUN 25 1996
DESIGN REVIEW COMMITTEE

CITY PROJECT NO. 5358.90
ZONE MAP NO. F16
SHEET 6 OF 19

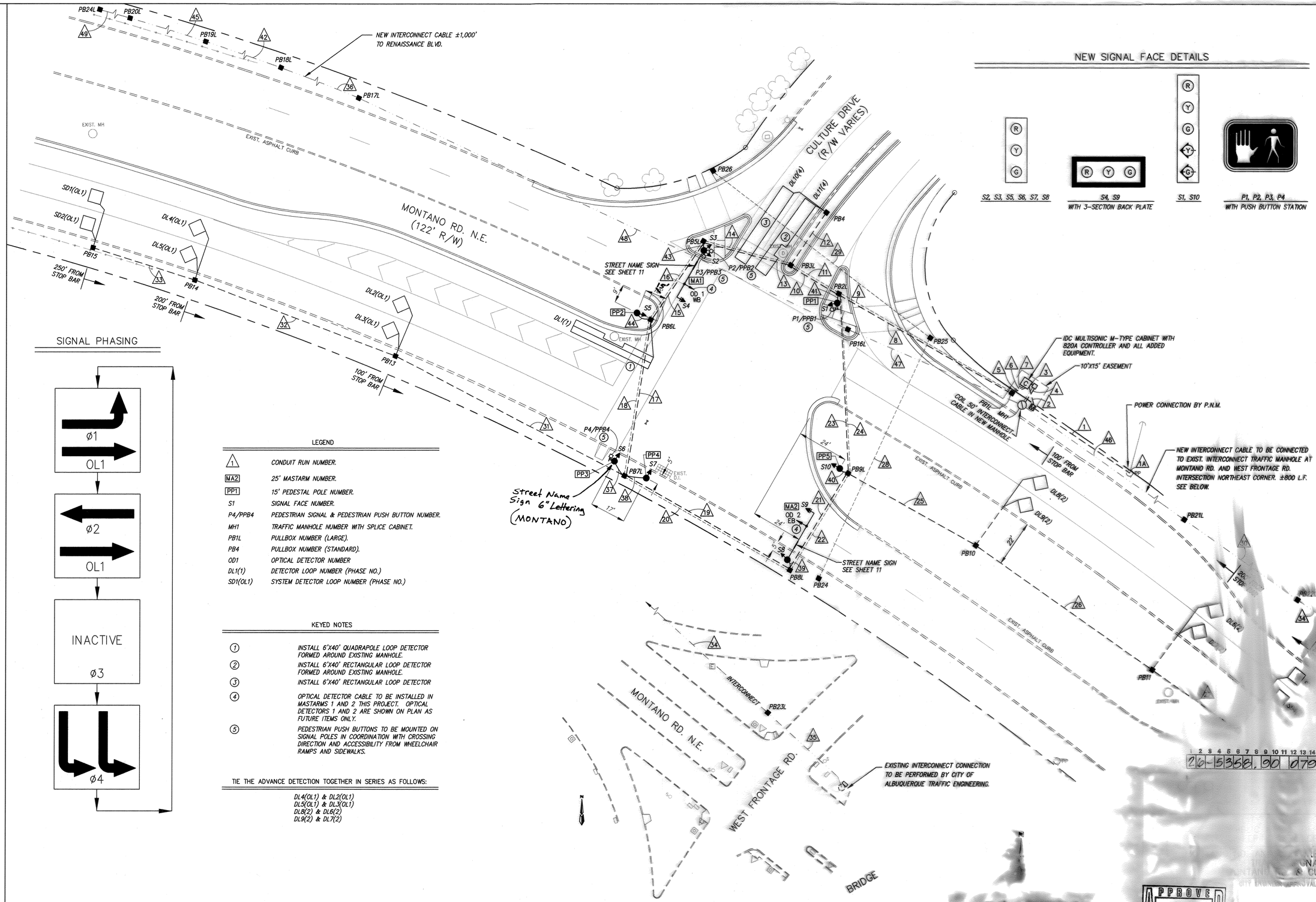

NEW SIGNAL FACE DETAILS

SIGNAL PHASING

LEGEND

1	CONDUIT RUN NUMBER.
MA2	25' MASTARM NUMBER.
PP1	15' PEDESTAL POLE NUMBER.
S1	SIGNAL FACE NUMBER.
P4/PPB4	PEDESTRIAN SIGNAL & PEDESTRIAN PUSH BUTTON NUMBER.
MH1	TRAFFIC MANHOLE NUMBER WITH SPLICE CABINET.
PB1L	PULLBOX NUMBER (LARGE).
PB4	PULLBOX NUMBER (STANDARD).
OD1	OPTICAL DETECTOR NUMBER
DL1(1)	DETECTOR LOOP NUMBER (PHASE NO.)
SD1(OL1)	SYSTEM DETECTOR LOOP NUMBER (PHASE NO.)

KEYED NOTES

1. INSTALL 6'X40' QUADRAPOLE LOOP DETECTOR FORMED AROUND EXISTING MANHOLE.
2. INSTALL 6'X40' RECTANGULAR LOOP DETECTOR FORMED AROUND EXISTING MANHOLE.
3. INSTALL 6'X40' RECTANGULAR LOOP DETECTOR
4. OPTICAL DETECTOR CABLE TO BE INSTALLED IN MASTARMS 1 AND 2 THIS PROJECT. OPTICAL DETECTORS 1 AND 2 ARE SHOWN ON PLAN AS FUTURE ITEMS ONLY.
5. PEDESTRIAN PUSH BUTTONS TO BE MOUNTED ON SIGNAL POLES IN COORDINATION WITH CROSSING DIRECTION AND ACCESSIBILITY FROM WHEELCHAIR RAMPS AND SIDEWALKS.

TIE THE ADVANCE DETECTION TOGETHER IN SERIES AS FOLLOWS:

DL4(OL1) & DL2(OL1)
DL5(OL1) & DL3(OL1)
DL8(2) & DL6(2)
DL9(2) & DL7(2)

MONTANO RD. AND WEST FRONTAGE RD. INTERSECTION

N.T.S.

AS BUILT INFORMATION
CONTRACTOR: HERKLINS DATE: 9/6
WORK STAKED BY: AS DATE:
WORK INSPECTED BY: DATE:
ACCEPTANCE BY: AS DATE: 9/6
FIELD VERIFICATION BY: AS DATE: 9/6
DRAWINGS CORRECTED BY: DATE:
MICRO-FILM INFORMATION
RECORDED BY: DATE:
NO.:

BENCH MARKS
BRASS TABLET STAMPED "STA. I-25-20" IN TOP OF CONCRETE POST. LOCATED 0.50 MILES SOUTH OF MONTANO RD. ON WEST FRONTAGE RD. TO THE RIGHT.
X = 380403.08
Y = 1502304.95
Z = 5079.46

SURVEY INFORMATION
FIELD NOTES
NO. BY DATE

ENGINEER'S SEAL
D. MARK GOODWIN NEW MEXICO 9848 REGISTERED PROFESSIONAL ENGINEER 9/9/96

NO.	REMARKS	BY	DATE

DESIGNED BY: DBC 03/96
DRAWN BY: DBC 03/96
CHECKED BY: DWG 03/96

26-15358.90 0797

...NE DR. INTERSECTION
...GNAL PLAN
...& CULTURE DR.

CITY ENGINEER APPROVAL MO./DAY/YR. MO./DAY/YR.
LAST DESIGN UPDATE

APPROVED JUN 2 1995 DESIGN REVIEW COMMITTEE

PROJECT NO. 5358.90 ZONE MAP NO. F16 SHEET 7 OF 19

CONDUIT AND CONDUCTOR REQUIREMENTS

CONDUIT LENGTH, SIZE, AND TYPE						CONDUIT FILL BY CONDUCTOR LENGTH AND TYPE								
RUN I.D. △2	SIZE/LENGTH 1"	2"	3"	TYPE	REMARKS	MCC 5 (# @ FT.)	MCC 7 (# @ FT.)	MCC 20 (# @ FT.)	SCC #8 (# @ FT.)	SCC #2 (# @ FT.)	NEW DLLIC (# @ FT.)	CC 12 (# @ FT.)	OPTICOM (# @ FT.)	SCC #6 (# @ FT.)
1		60'		REC	POWER FROM P.N.M. RISER					3 @ 70				
1A		30'		REC	P.N.M. RISER UP POWER POLE					3 @ 40				
2		10'		REC	METER TO CONTROLLER					3 @ 20				
3			2'	REC	SPLICE CABINET TO CONTROLLER							1 @ 15		
4			10'	REC	M.H. TO SPLICE CABINET							2 @ 20		
5			10'	REC	CONTROLLER TO PB1L			1 @ 20	1 @ 20				2 @ 20	
6			10'	REC	CONTROLLER TO PB1L									
7		10'		REC	CONTROLLER TO PB1L	1 @ 20					10 @ 20			
8			95'	REC	PB1L TO PB2L			1 @ 105	1 @ 105				2 @ 105	
9		95'		REC	PB1L TO PB2L	1 @ 105					10 @ 105			
10			25'	REC	PB2L TO PB3L			1 @ 35	1 @ 35				1 @ 35	
11		25'		REC	PB2L TO PB3L	1 @ 35					6 @ 35			
12			30'	REC	PB3L TO PB4						1 @ 40			
13			45'	REC	PB3L TO PB5L			1 @ 55	1 @ 55				1 @ 55	
14		45'		REC	PB3L TO PB5L	1 @ 55					5 @ 55			
15			45'	REC	PB5L TO PB6L			1 @ 55	1 @ 55					
16		45'		REC	PB5L TO PB6L	1 @ 55					5 @ 55			
17			75'	REC	PB6L TO PB7L			1 @ 85	1 @ 85					
18		75'		REC	PB6L TO PB7L	1 @ 85					4 @ 85			
19			90'	REC	PB7L TO PB8L			1 @ 100	1 @ 100					
20		90'		REC	PB7L TO PB8L	1 @ 100								
21			55'	REC	PB8L TO PB9L			1 @ 65	1 @ 65				1 @ 65	
22		55'		REC	PB8L TO PB9L	1 @ 65								
23			85'	REC	PB9L TO PB2L			1 @ 95	1 @ 95				1 @ 95	
24		85'		REC	PB9L TO PB2L	1 @ 95					4 @ 95			
25			70'	REC	PB9L TO PB10						4 @ 80			
26			100'	REC	PB10 TO PB11						4 @ 110			
27			50'	REC	PB11 TO PB12						2 @ 60			
28		125'		REC	PB24 TO PB25	EMPTY								
29		130'		REC	PB25 TO PB26									
30			250'	REC	PB21L TO PB22L							1 @ 260		
31			120'	REC	PB7L TO PB13L						4 @ 130			
32			100'	REC	PB13L TO PB14L						4 @ 110			
33			50'	REC	PB14L TO PB15						2 @ 60			
34			250'	REC	PB22L TO PB23L							1 @ 260		
35			50'	REC	PB23L TO EXIST. INTERCONNECT MH							1 @ 60		
36			250'	REC	PB17L TO PB18L							1 @ 260		
37			10'	REC	PB7L TO PP3	3 @ 20								
38			10'	REC	PB7L TO PP4	1 @ 20								
39			6'	REC	PB8L TO MA2	2 @ 16							1 @ 16	
40			6'	REC	PB9L TO PP5		1 @ 16							
41			6'	REC	PB2L TO PP1	2 @ 16	1 @ 16							
42			250'	REC	PB18L TO PB19L							1 @ 260		
43			6'	REC	PB5L TO MA1	7 @ 16							1 @ 16	
44			10'	REC	PB6L TO PP2	1 @ 20								
45			250'	REC	PB19L TO PB20L							1 @ 260		
46			250'	REC	MH1 TO PB21L							1 @ 305		
47			90'	REC	MH1 TO PB16L							1 @ 100		
48			200'	REC	PB16L TO PB17L							1 @ 210		
49			250'	REC	PB20L TO PB24L							1 @ 260		

CONDUIT AND CONDUCTOR REQUIREMENTS (CONTINUED)

CONDUIT LENGTH, SIZE, AND TYPE						CONDUIT FILL BY CONDUCTOR LENGTH AND TYPE								
RUN I.D. △2	SIZE/LENGTH 1"	2"	3"	TYPE	REMARKS	MCC 5 (# @ FT.)	MCC 7 (# @ FT.)	MCC 20 (# @ FT.)	SCC #8 (# @ FT.)	SCC #2 (# @ FT.)	NEW DLLIC (# @ FT.)	CC 12 (# @ FT.)	OPTICOM (# @ FT.)	SCC #6 (# @ FT.)
PP1					BASE TO S1	~~1 @ 22~~	1 @ 20							
"					BASE TO P1	1 @ 16								
"					BASE TO PPB1	1 @ 11								
PP2					BASE TO S5	1 @ 25								
PP3					BASE TO S6	1 @ 25								
"					BASE TO P4	1 @ 16								
"					BASE TO PPB4	1 @ 11								
PP4					BASE TO S7	1 @ 25								
PP5					BASE TO S10		1 @ 20							
MA1					BASE TO S2	1 @ 30								
"					BASE TO S3	1 @ 30								
"					BASE TO S4	1 @ 55								
"					BASE TO P2	1 @ 16								
"					BASE TO PPB2	1 @ 11								
"					BASE TO P3	1 @ 16								
"					BASE TO PPB3	1 @ 11								
"					BASE TO OD1								1 @ 50	
MA2					BASE TO S8	1 @ 30								
"					BASE TO S9	1 @ 55								
"					BASE TO OD2								1 @ 50	
TOTALS		880	3,211			~~1,299~~ 1,274	72	615	615	390	4,730	2,290	632	

AS BUILT INFORMATION
CONTRACTOR: DATE
WORK STAKED BY: DATE
INSPECTOR'S ACCEPTANCE BY: DATE
REDLINE BY: DATE
VERIFICATION BY: DATE
CORRECTED BY: DATE
MICRO-FILM INFORMATION
RECORDED BY: DATE
NO.

BENCH MARKS
BRASS TABLET STAMPED "STA. I-25-20", IN TOP OF CONCRETE POST. LOCATED 0.50 MILES SOUTH OF MONTANO RD. ON WEST FRONTAGE RD. TO THE RIGHT.
X = 380403.88
Y = 1502304.95
Z = 5078.46

SURVEY INFORMATION
FIELD NOTES
NO. BY: DATE

ENGINEER'S SEAL
D. MARK GOODWIN NEW MEXICO CERTIFICATE NO. 9345 REGISTERED PROFESSIONAL ENGINEER
4/24/96

NO. BY DATE REVISION

DESIGNED BY: DSC DATE 04/96
DRAWN BY: DSC DATE 04/96
CHECKED BY: DMG DATE 04/96

26-5358.90 0897

NORTH DIVISION ENGINEERING MANAGEMENT GROUP
TRAFFIC SIGNAL CABLES & CONDUITS

DESIGN REVIEW COMMITTEE
APPROVED JUN 25 1998 DESIGN REVIEW COMMITTEE

NO./DAY/YR.

CITY PROJECT NO. 5358.90 | ZONE MAP NO. F16 | SHEET 8 OF 19

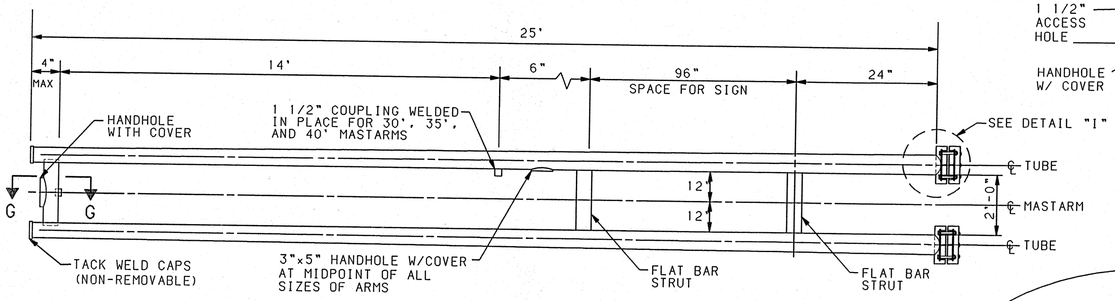

TYPICAL MASTARM DETAIL

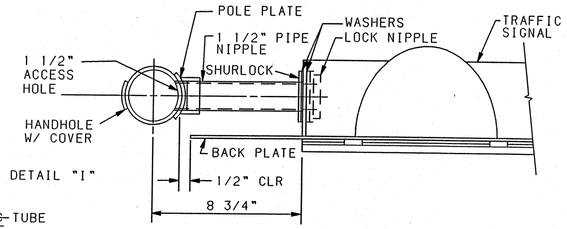

SECTION C-C

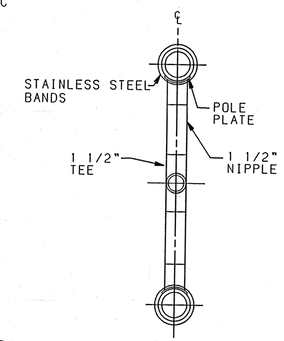

SECTION D-D

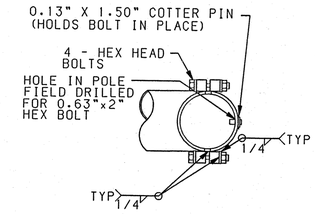

PLAN

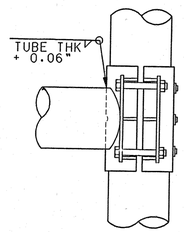

ELEVATION

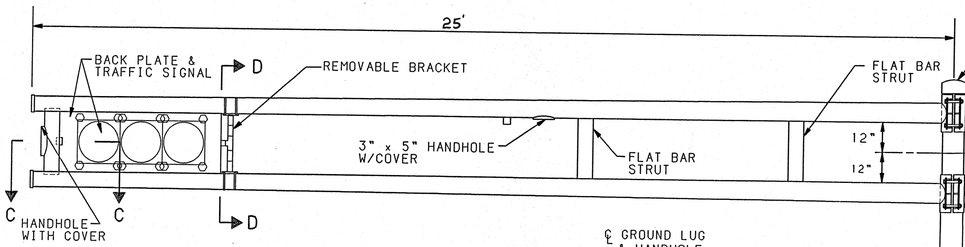

3-SECTION TRAFFIC SIGNAL

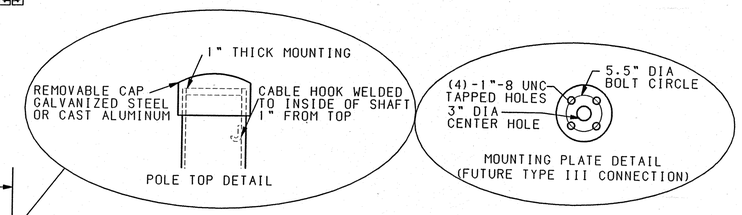

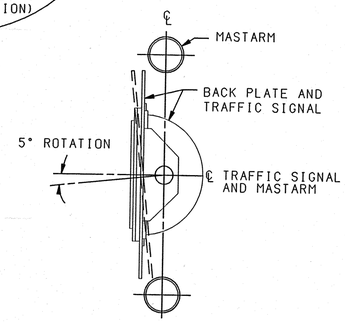

SECTION E-E

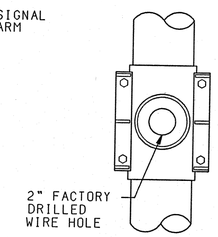

SECTION

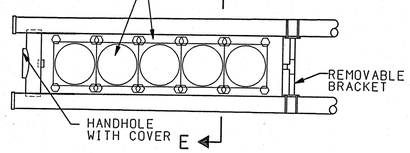

5-SECTION TRAFFIC SIGNAL

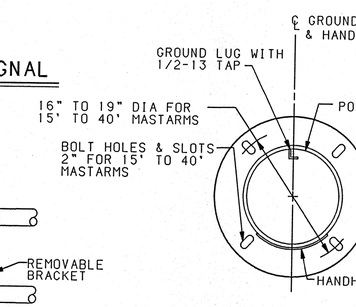

SECTION A-A

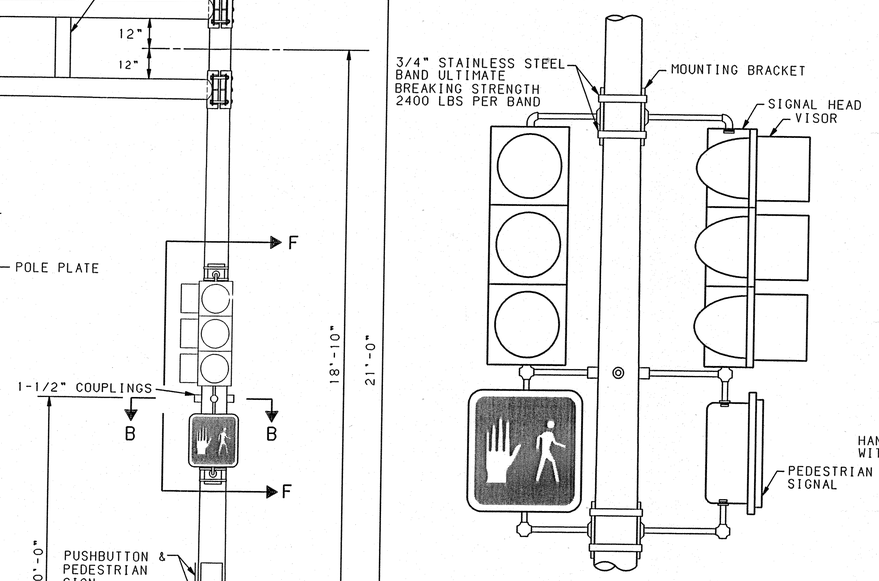

SECTION F-F

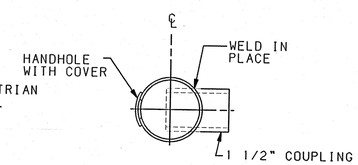

SECTION G-G

DETAIL I

NOTE:
ONE SIZE ARM CLAMP FOR 15' TO 25' MASTARMS AND ONE SIZE FOR 30' TO 40' MASTARMS WILL BE ALLOWED

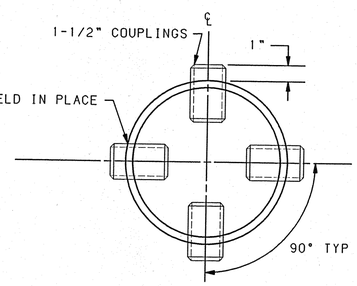

SECTION B-B

MITERED ARM END (OPTIONAL)

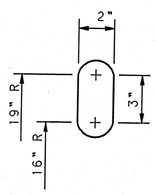

POLE PLATE SLOT DETAIL

ANCHOR BOLTS
15', 20', 25' ARM: 1 1/2"x54"x6"
30', 35', 40' ARM: 1 1/2"x54"x6"

TRAFFIC SIGNAL MASTARM NOTES

1. DESIGN IN ACCORDANCE WITH 1985 AASHTO SPECIFICATIONS FOR STRUCTURAL SUPPORTS FOR HIGHWAY SIGNS, LUMINARIES, AND TRAFFIC SIGNALS FOR AN 80 MPH WIND ZONE.
2. POLES AND MASTARM SHAFTS SHALL CONFORM TO ASTM A-595 GRADE A (MIN YIELD 55 KSI).
3. BASE PLATE AND SIGNAL ARM CLAMP SHALL BE ASTM A-36 (MIN YIELD 36 KSI).
4. ANCHOR BOLTS SHALL BE ASTM A-36 MOD 55 (MIN. YIELD 55 KSI).
5. SIGNAL ARM CONNECTING BOLTS SHALL BE ASTM A-325.
6. WELDING SHALL CONFORM TO THE REQUIREMENTS OF THE AMERICAN WELDING SOCIETY SPECIFICATION AWS D1.1. LATEST EDITION. ALL WELDS SHALL BE FREE FROM CRACKS, EXCESSIVE UNDERCUT, AND POROSITY. ANY WELDING DEFECTS SHALL BE REPAIRED BY REMOVING THE DEFECTIVE MATERIAL AND REPLACING IT WITH SOUND WELD MATERIAL.
7. ALL HOLES SHALL BE DRILLED AND DEBURRED.
8. ALL POLES, MASTARMS, AND BOLTS SHALL BE GALVANIZED TO ASTM A-123 AND A -153.
9. MASTARMS SHALL BE MARKED TO DESCRIBE WHICH IS TOP AND WHICH IS BOTTOM. POLE PLATE COVERS SHALL BE MARKED IN MATED PAIRS. POLE SHAFTS SHALL BE MARKED "ALB" "15-25" OR "30-40", AND DATE OF FABRICATION (MONTH/YEAR).

MERCH\TDTL1

AS BUILT INFORMATION
CONTRACTOR FRANKLINS DATE 96
WORK STAKED BY ALS DATE
INSPECTOR'S ACCEPTANCE BY FIELD ALS DATE 96
VERIFICATION OF DIMENSIONS BY ALS DATE 8/96
CORRECTED BY ALS DATE
MICRO-FILM INFORMATION
RECORDED BY DATE
NO.

BENCH MARKS
BRASS TABLET STAMPED "STA. I-25-20", IN TOP OF CONCRETE POST. LOCATED 0.50 MILES SOUTH OF MONTANO RD. ON WEST FRONTAGE RD. TO THE RIGHT.
X = 390403.88
Y = 1502304.95
Z = 5078.46

SURVEY INFORMATION
FIELD NOTES
NO. | BY | DATE

ENGINEER'S SEAL

NO.	DATE	REMARKS	BY
		REVISIONS	

DESIGNED BY	BHJ/COA	DATE 02/96
DRAWN BY	BHJ/COA	DATE 02/96
CHECKED BY	BHJ/COA	DATE 02/96

1 2 3 4 5 6 7 8 9 10 11 12 13 14 15
26-5358.90 0997

dmg D. MARK GOODWIN & ASSOCIATES, P.A.
CONSULTING ENGINEERS & SURVEYORS
P.O. BOX 90606
ALBUQUERQUE, NEW MEXICO 87199
(505) 345-2010

CITY OF ALBUQUERQUE
PUBLIC WORKS DEPARTMENT
ENGINEERING DEVELOPMENT GROUP

TITLE: TRAFFIC SIGNAL MASTARM DETAILS
TYPE II STANDARD
GALVANIZED STEEL

DESIGN REVIEW COMMITTEE
APPROVED JAN 25 1996 DESIGN REVIEW COMMITTEE
LAST DESIGN UPDATE | MO./DAY/YR.

CITY PROJECT NO.	ZONE MAP NO.	SHEET	OF
5358.90	F16	9	19

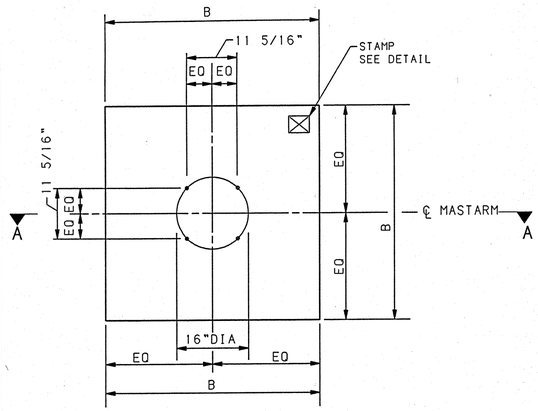

PLAN VIEW (SQUARE)

NO SCALE

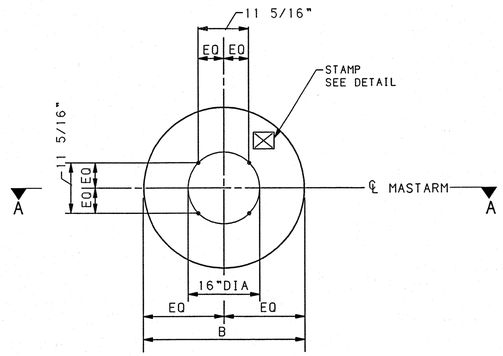

PLAN VIEW (ROUND)

NO SCALE

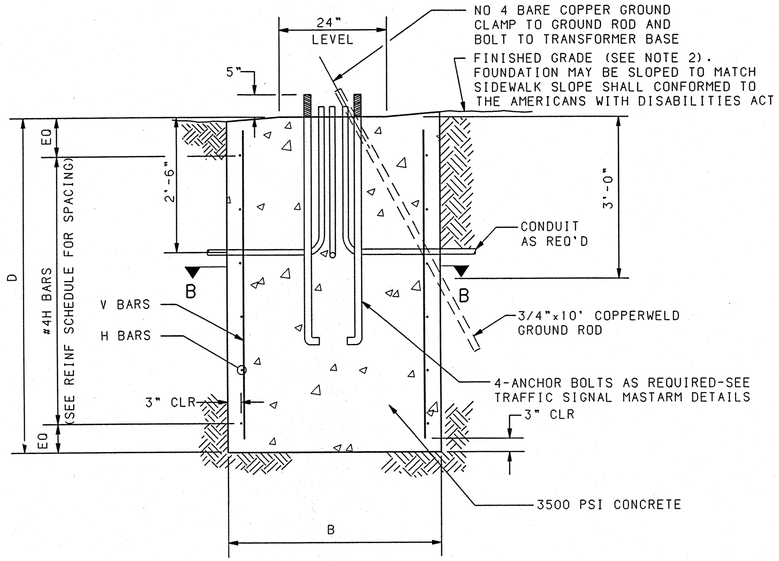

SECTION A-A (ROUND OR SQUARE)

NO SCALE

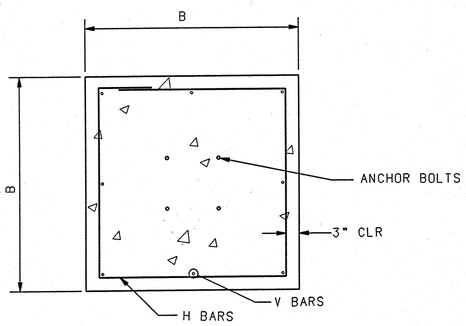

SECTION B-B (SQUARE)

NO SCALE

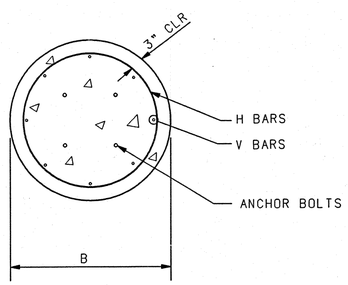

SECTION B-B (ROUND)

NO SCALE

TRAFFIC SIGNAL MASTARM FOUNDATION NOTES

1. REFER TO THE PLANS FOR LOCATIONS OF TRAFIC SIGNAL MASTARM FOUNDATIONS.
2. FINISHED GRADE FOR THE FOUNDATIONS SHALL BE ESTABLISHED IN THE FIELD BY THE PROJECT MANAGER.
3. THE FOUNDATIONS SHOWN HERE SHALL BE CONSTRUCTED IN ACCORDANCE WITH THE CITY OF ALBUQUERQUE STANDARD SPECIFICATIONS FOR PUBLIC WORKS CONSTRUCTION, CURRENT REVISION.
4. CONCRETE SHALL BE 3500 PSI FOR EXTERIOR STRUCTURES. REFER TO TABLE 101.C OF THE SPECIFICATIONS.
5. REINFORCING STEEL SHALL CONFORM TO ASTM A-615 GRADE 60.
6. THE TOP 6 INCHES OF THE FOUNDATION PEDESTAL SHALL BE FORMED TO THE DIMENSIONS SHOWN ON THIS SHEET TO FORM NEAT LINES. CONCRETE BELOW 6 LINES MAY BE CAST AGAINST THE EARTH.
7. THE CONCRETE SHALL GAIN 80% OF THE DESIGN STRENGTH PRIOR TO INSTALLING THE TRAFFIC SIGNAL MASTARM.
8. ALL FOUNDATIONS SHALL INCLUDE COPPERWELD GROUND RODS. ALL GROUND RODS SHALL BE 3/4" DIA X 10'-0" AND WILL BE CONSIDERED INCIDENTAL TO THE FOUNDATIONS BID ITEMS.
9. ALL FOUNDATIONS SHALL BE STAMPED EITHER "A" OR "B" TO SHOW TYPE CONSTRUCTED (SEE STAMP DETAIL).

FOUNDATION DIMENSIONS AND QUANTITIES

FOUNDATION TYPE	SIGNAL ARM SPAN (FT)	DIMENSION B (WIDTH)	DIMENSION D (DEPTH)	REINFORCING V BARS MARK	REINFORCING H BARS MARK	REBAR POUNDS	3500 PSI CONCRETE CUBIC YARDS	NOTES
TYPE A (SQUARE)	15	3'-6"	5'-0"	#4V2	#3H2	49.1	2.27	
	20	"	"	"	"		"	
	25	"	"	"	"		"	
TYPE B (SQUARE)	30	4'-0"	6'-3"	#5V1	#3H1	82.6	3.70	
	35	"	"	"	"		"	
	40	"	"	"	"		"	
TYPE A (ROUND)	15	2'-6"	8'-6"	#6V4	#3H4	98.1	1.55	ROUND SHAPE TO BE USED ONLY WHERE SPECIFICALLY NOTED ON PLANS OR WHEN APPROVED BY THE PROJECT MANAGER.
	20	"	"	"	"		"	
	25	"	"	"	"		"	
TYPE B (ROUND)	30	3'-0"	11'-9"	#7V3	#3H3	179.7	3.08	
	35	"	"	"	"		"	
	40	"	"	"	"		"	

REINFORCING SCHEDULE (GRADE 60 BARS)

MARK	QUANT	TYPE	SIZE	LENGTH	COMMENTS
#5V1	8	1	5	5'-9"	
#4V2	8	1	4	4'-6"	
#7V3	6	1	7	11'-3"	
#6V4	6	1	6	8'-0"	
#3H1	6	2	3	15'-4"	A = 42",TIES AT 14" OC
#3H2	5	2	3	13'-4"	A = 36",TIES AT 12" OC
#3H3	12	3	3	9'-3"	DIA = 30",TIES AT 12" OC
#3H4	9	3	3	7'-8"	DIA = 24",TIES AT 12" OC

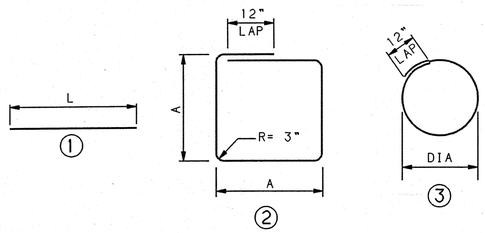

BAR BENDING DIAGRAM

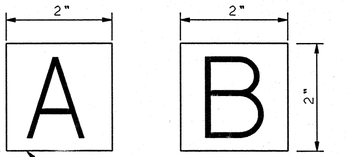

STAMP CONCRETE 1/4" DEEP TO MATCH FOUNDATION SIZE

STAMP DETAIL

NO SCALE

AS BUILT INFORMATION
CONTRACTOR FOUNDATIONS
WORK STAKED BY ALS DATE 96
INSPECTOR'S ACCEPTANCE BY DATE
FIELD VERIFICATION BY ALS DATE 96
DRAWINGS CORRECTED BY ALS DATE 6/96
MICRO-FILM INFORMATION
RECORDED BY DATE
NO.

BENCH MARKS
BRASS TABLET STAMPED "STA. 1-25-20", IN TOP OF CONCRETE POST. LOCATED 0.50 MILES SOUTH OF MONTANO RD. ON WEST FRONTAGE RD. TO THE RIGHT.
X = 390403.88
Y = 1502304.95
Z = 5079.46

SURVEY INFORMATION
FIELD NOTES
NO. BY DATE

ENGINEER'S SEAL
NEW MEXICO GEOGRAPHER 6948 REGISTERED

NO.	DATE	REMARKS	BY
		REVISIONS	

DESIGN
DESIGNED BY BHI/COA DATE 02/96
DRAWN BY BHI/COA DATE 02/96
CHECKED BY BHI/COA DATE 02/96

dmg D. MARK GOODWIN & ASSOCIATES, P.A.
CONSULTING ENGINEERS & SURVEYORS
P.O. BOX 90606
ALBUQUERQUE, NEW MEXICO 87199
(505) 345-2010

CITY OF ALBUQUERQUE
PUBLIC WORKS DEPARTMENT
ENGINEERING DEVELOPMENT GROUP

TITLE: TRAFFIC SIGNAL MASTARM DETAILS
FOUNDATION DETAILS
TYPE II AND TYPE III STANDARDS

DESIGN REVIEW COMMITTEE
APPROVED 3/8/25/1995 DESIGN REVIEW COMMITTEE

LAST DESIGN UPDATE MO./DAY/YR.

CITY PROJECT NO. 5358.90 | ZONE MAP NO. F16 | SHEET 10 OF 19

26-5358.90 1 0 97

MERCH\TDTL2

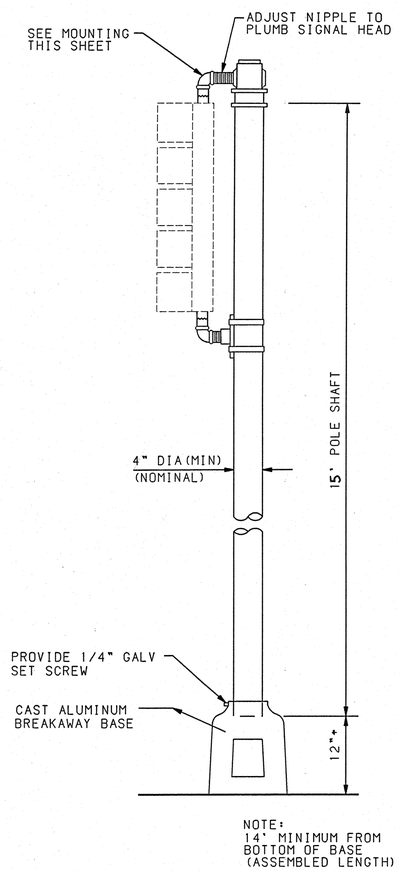

MOUNTING DETAIL

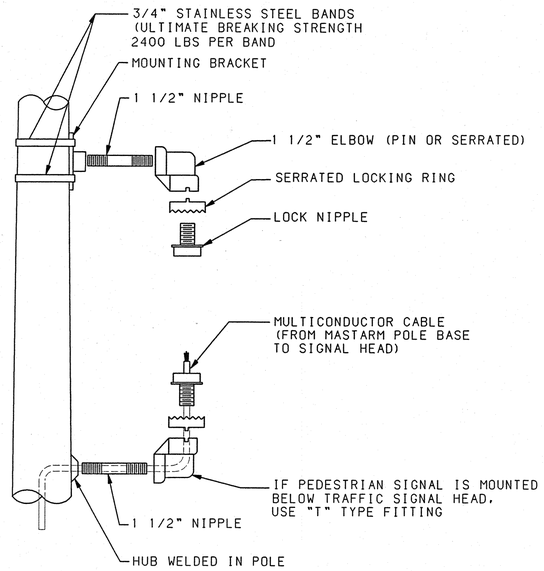

MOUNTING DETAIL

(SIDE OF SHAFT)

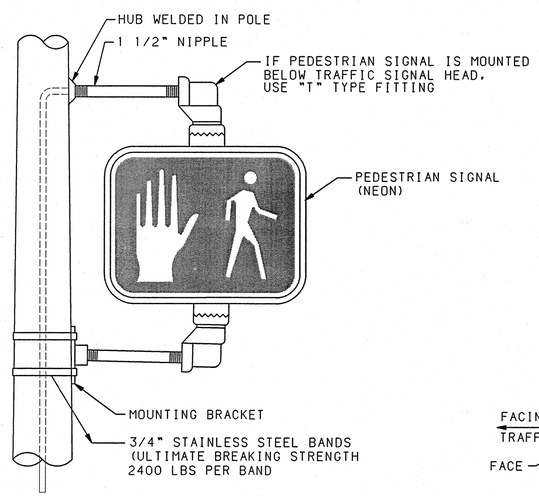

PEDESTRIAN SIGNAL

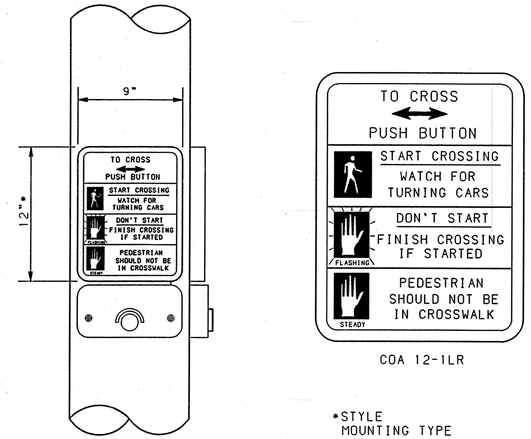

PEDESTRIAN PUSH BUTTON DETAIL

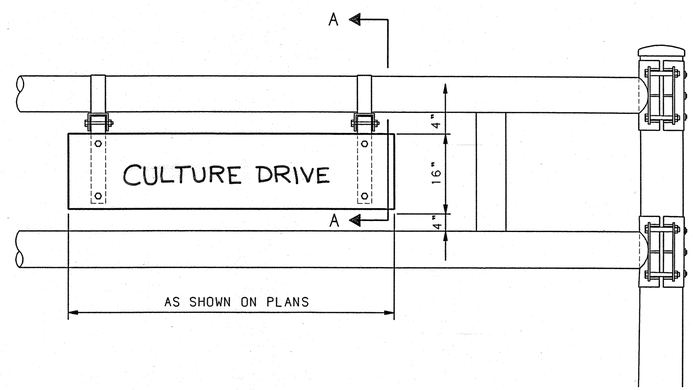

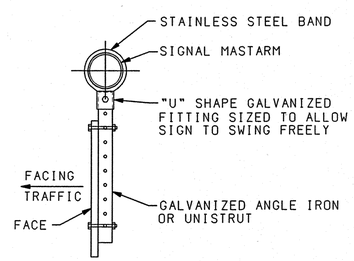

SECTION "A-A"

NOTES:

1. STREET NAMES SIGNS REQUIRED AS SHOWN ON SIGNAL PLAN SHEETS.
2. SIGN SHALL BE 16" WIDE WITH 8" SERIES "C" LETTERS UP TO 12 SQUARE FEET TOTAL AREA AND SHALL HAVE HIGH INTENSITY REFLECTIVE LEGEND. BORDER AND BACKGROUND COLORS: WHITE ON GREEN. SIGN PANELS SHALL BE SINGLE SHEET 6061-T6 ALUMINUM .120 MINIMUM THICKNESS.

STREET NAME SIGN DETAIL

AS BUILT INFORMATION
CONTRACTOR FRANKLIN
WORK STAKED BY ALS DATE 9/6
INSPECTOR'S ACCEPTANCE BY DATE
FIELD VERIFICATION BY ALS DATE 9/6
DRAWINGS CORRECTED BY ALS DATE 9/6
MICRO-FILM INFORMATION
RECORDED BY DATE
NO.

BENCH MARKS
BRASS TABLET STAMPED "STA. I-25-20", IN TOP OF CONCRETE POST. LOCATED 0.50 MILES SOUTH OF MONTANO RD. ON WEST FRONTAGE RD. TO THE RIGHT.
X = 390401.68
Y = 1502304.95
Z = 5079.46

SURVEY INFORMATION
FIELD NOTES

NO.	BY	DATE

ENGINEER'S SEAL
D. MARK GOODWIN NEW MEXICO 9848 REGISTERED PROFESSIONAL ENGINEER

REVISIONS

NO.	DATE	REMARKS	BY

		DATE
DESIGN		02/96
DESIGNED BY	BHI/COA	DATE 02/96
DRAWN BY	BHI/COA	DATE 02/96
CHECKED BY	BHI/COA	DATE 02/96

dmg D. MARK GOODWIN & ASSOCIATES, P.A.
CONSULTING ENGINEERS & SURVEYORS
P.O. BOX 90606
ALBUQUERQUE, NEW MEXICO 87199
(505) 345-2010

CITY OF ALBUQUERQUE
PUBLIC WORKS DEPARTMENT
ENGINEERING DEVELOPMENT GROUP

TITLE: TRAFFIC SIGNAL
MISCELLANEOUS DETAILS – GALVANIZED STEEL

DESIGN REVIEW COMMITTEE
APPROVED JAN 25 1996 DESIGN REVIEW COMMITTEE
LAST DESIGN UPDATE
MO./DAY/YR.

1 2 3 4 5 6 7 8 9 10 11 12 13 14 15
26-5358.90 1/1/97

MERCH\TDTL3

CITY PROJECT NO.	ZONE MAP NO.	SHEET	OF
5358.90	F16	11	19

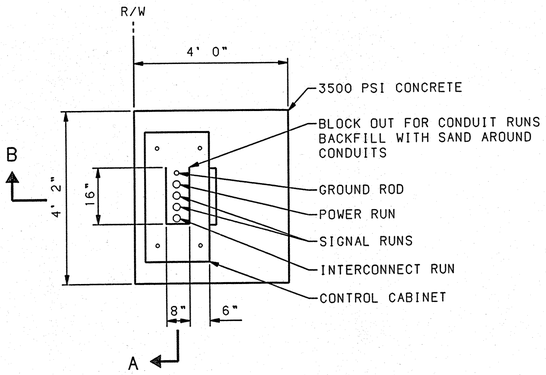

PLAN

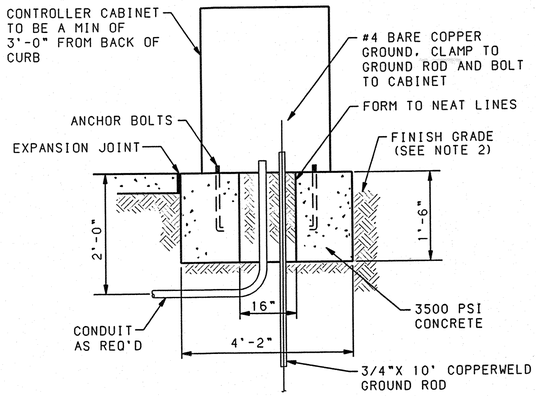

SECTION A

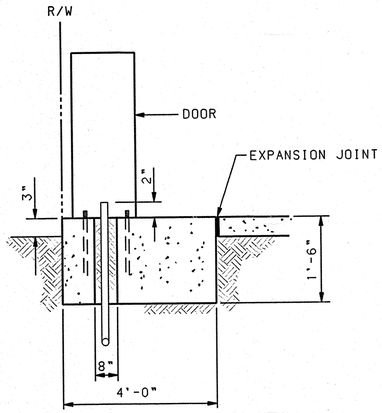

SECTION B

CONTROLLER FOUNDATION DETAIL

IN THE EVENT THE SUPPLIED CABINET WOULD OVERLAP THE SIDES OF ABOVE FOUNDATION. THE FOUNDATION SHALL BE INCREASED IN SIZE AS DIRECTED BY THE ENGINEER.

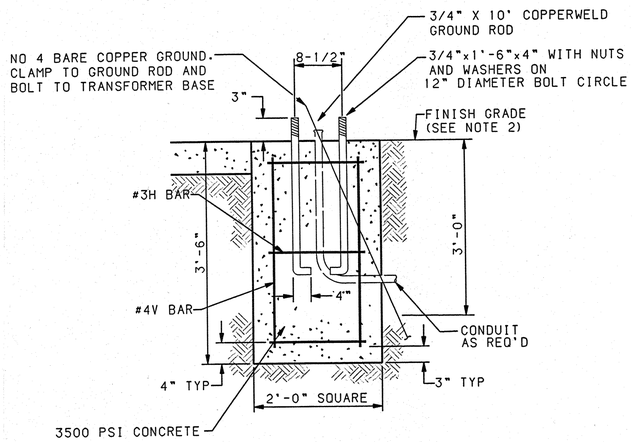

PEDESTAL FOUNDATION DETAIL

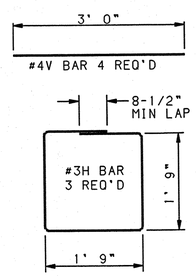

REINFORCING STEEL

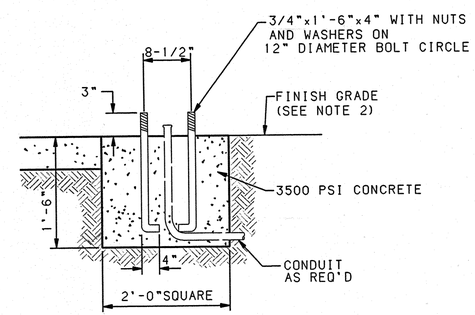

SPLICE CABINET FOUNDATION DETAIL

ESTIMATED QUANTITIES

FOUNDATION TYPE	3500 PSI CONCRETE CU YD	REINFORCING BARS POUNDS
PEDESTAL FOUNDATION	0.52	17
CONTROLLER FOUNDATION (TYPE M & P)	0.88	--
SPLICE CABINET FOUNDATION	0.13	--

(FOR CONTRACTORS INFORMATION ONLY)

TRAFFIC SIGNAL FOUNDATION NOTES

1. ALL FOUNDATIONS SHALL INCLUDE COPPERWELD GROUND RODS. ALL GROUND RODS SHALL BE 3/4" Ø x 10'-0" AND WILL BE CONSIDERED INCIDENTAL TO THE FOUNDATION BID ITEMS.
2. FINISHED GRADE FOR ALL FOUNDATIONS TO BE DETERMINED IN THE FIELD BY THE PROJECT ENGINEER. FOUNDATIONS MAY BE SLOPED TO MATCH SIDEWALKS. SLOPES SHALL CONFORM TO THE AMERICANS WITH DISABILITIES ACT REQUIREMENTS.

1 2 3 4 5 6 7 8 9 10 11 12 13 14 15
26-5358.90 1/207

MERCH\TDTL4

AS BUILT INFORMATION
CONTRACTOR FRANCLIN DATE 9/2
WORK VERIFIED BY ALS DATE
INSPECTOR'S ACCEPTANCE BY ALS DATE 9/2
FIELD VERIFICATION BY ALS DATE 12/96
DRAWINGS CORRECTED BY ALS DATE 12/96
MICRO-FILM INFORMATION
RECORDED BY DATE
NO.

BENCH MARKS
BRASS TABLET STAMPED "STA. 1-25-20", IN TOP OF CONCRETE POST, LOCATED 0.50 MILES SOUTH OF MONTANO RD. ON WEST FRONTAGE RD. TO THE RIGHT.
X = 390403.88
Y = 1502304.95
Z = 5079.46

SURVEY INFORMATION
FIELD NOTES
NO. BY DATE

ENGINEER'S SEAL
D. MARK GOODWIN NEW MEXICO 6868 REGISTERED PROFESSIONAL ENGINEER

NO.	DATE	REMARKS	BY
		REVISIONS	

DESIGN
DESIGNED BY BHI/COA DATE 02/96
DRAWN BY BHI/COA DATE 02/96
CHECKED BY BHI/COA DATE 02/96

dmg D. MARK GOODWIN & ASSOCIATES, P.A.
CONSULTING ENGINEERS & SURVEYORS
P.O. BOX 90606
ALBUQUERQUE, NEW MEXICO 87199
(505) 345-2010

CITY OF ALBUQUERQUE
PUBLIC WORKS DEPARTMENT
ENGINEERING DEVELOPMENT GROUP

TITLE: TRAFFIC SIGNAL CONTROLLER CABINET & PEDESTAL FOUNDATION DETAILS

DESIGN REVIEW COMMITTEE
APPROVED JAN 25 1996 DESIGN REVIEW COMMITTEE
LAST DESIGN UPDATE | MO./DAY/YR.

CITY PROJECT NO. 5358.90 | ZONE MAP NO. F16 | SHEET 12 OF 19

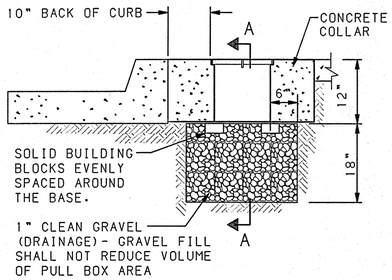

TYPICAL PULLBOX INSTALLATION

NOTE: SEE "CONCRETE COLLAR DETAILS"

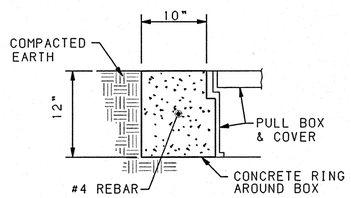

IN COMPACTED EARTH

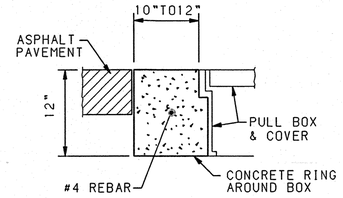

IN ASPHALT PAVEMENTS

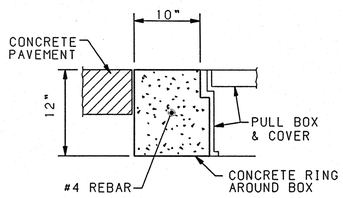

IN CONCRETE PAVEMENTS

CONCRETE COLLAR DETAILS

NOTE: THE CONCRETE COLLAR FOR THE PULL BOXES WILL BE CONSIDERED INCIDENTAL TO THE TO THE PULL BOX BID ITEMS.

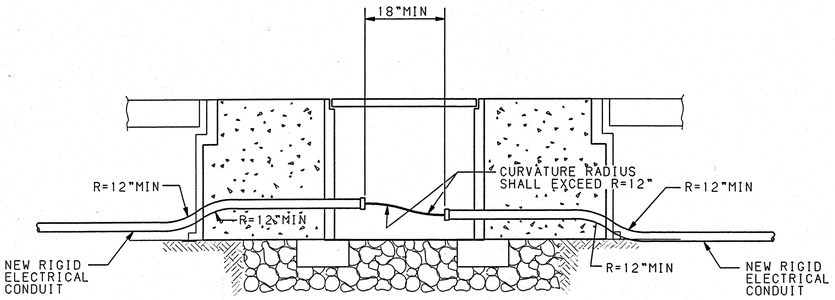

SECTION A-A

TRAFFIC SIGNAL PULLBOX (TYPICAL)
NEW CONDUIT INSTALLATION

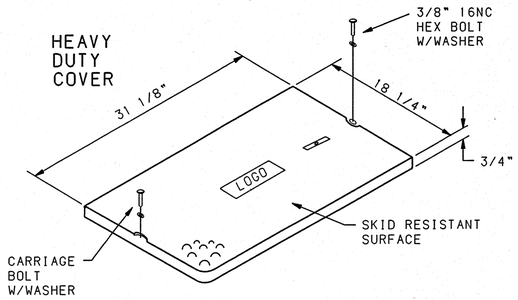

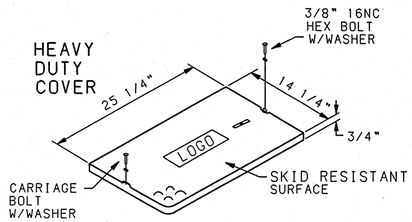

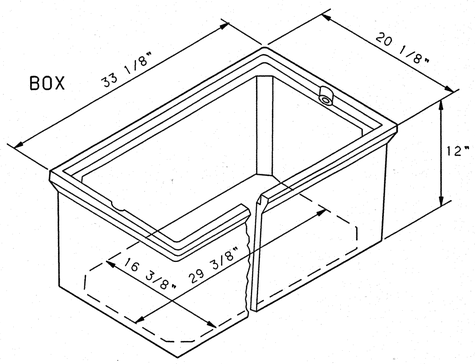

LARGE PULL BOX

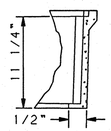

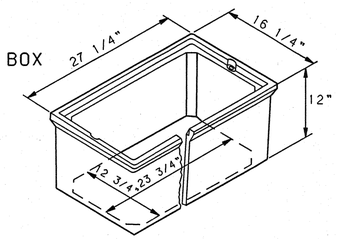

STANDARD PULL BOX

PULL BOX DETAILS

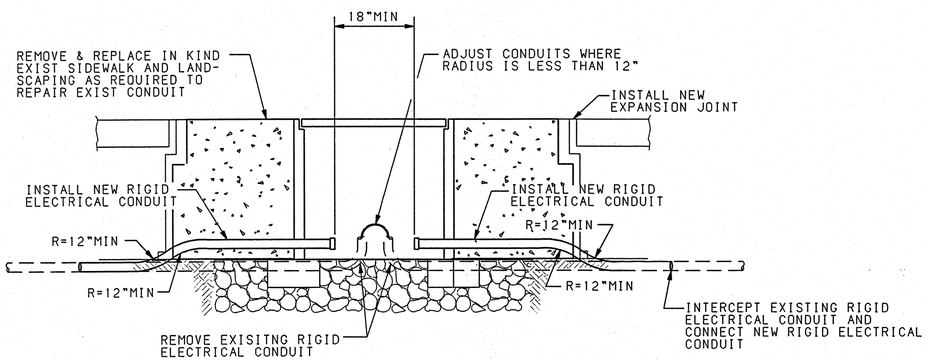

TRAFFIC SIGNAL PULLBOX (TYPICAL)
RETROFIT INSTALLATION

NOTES FOR HEAVY DUTY REINFORCED POLYMER MORTAR PULL BOXES AND COVERS

1. MATERIAL TO BE AN AGGREGATE CONSISTING OF SAND AND GRAVEL BOUND TOGETHER WITH A POLYMER AND REINFORCED WITH A HEAVY WEAVE FIBERGLASS. THE MATERIAL MUST HAVE THE FOLLOWING MECHANICAL PROPERTIES: COMPRESSIVE STRENGTH-11,000 PSI, TENSILE STRENGTH-1700 PSI, FLEXURAL STRENGTH-7500 PSI.
2. ALL PULL BOX COVERS SHALL BE HEAVY DUTY REINFORCED POLYMER MORTAR, HAVING A SERVICE LOAD OF 15,000 LBS. OVER A 10" SQUARE (150 PSI). NO CONCRETE OR STEEL COVERS WILL BE ACCEPTABLE.
3. ELECTRICAL PULL BOX (SMALL) SHALL BE A HEAVY DUTY REINFORCED POLYMER MORTAR PULL BOX AND COVER MEASURING 12-7/8"x12-7/8"x3/4".

MERCH\TDTL5

AS BUILT INFORMATION
CONTRACTOR HAMMLINS
WORK STAKED BY ALS DATE 96
WORK INSPECTED BY DATE
FIELD VERIFICATION BY ALS DATE 96
DRAWINGS CORRECTED BY ALS DATE 96
MICRO-FILM INFORMATION
RECORDED BY DATE
NO.

BENCH MARKS
BRASS TABLET STAMPED "STA. I-25-20", IN TOP OF CONCRETE POST. LOCATED 0.50 MILES SOUTH OF MONTANO RD. ON WEST FRONTAGE RD. TO THE RIGHT.
X = 390403.88
Y = 1502304.95
Z = 5079.46

SURVEY INFORMATION
FIELD NOTES
NO. BY DATE

ENGINEER'S SEAL
D. MARK GOODWIN NEW MEXICO 9649 REGISTERED PROFESSIONAL ENGINEER

NO.	DATE	REMARKS	BY
		REVISIONS	

DESIGN
DESIGNED BY BHI/COA DATE 02/96
DRAWN BY BHI/COA DATE 02/96
CHECKED BY BHI/COA DATE 02/96

26-5358.90 1/3 97

dmg D. MARK GOODWIN & ASSOCIATES, P.A.
CONSULTING ENGINEERS & SURVEYORS
P.O. BOX 90606
ALBUQUERQUE, NEW MEXICO 87199
(505) 345-2010

CITY OF ALBUQUERQUE
PUBLIC WORKS DEPARTMENT
ENGINEERING DEVELOPMENT GROUP

TITLE: TRAFFIC SIGNAL PULL BOX DETAILS

DESIGN REVIEW COMMITTEE
APPROVED JUN 25 1996 DESIGN REVIEW COMMITTEE
LAST DESIGN UPDATE
MO./DAY/YR.

CITY PROJECT NO. 5358.90
ZONE MAP NO. F16
SHEET 13 OF 19

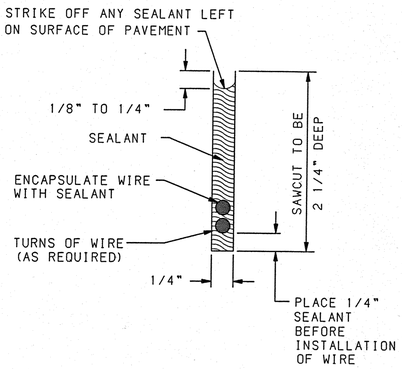

SECTION A-A

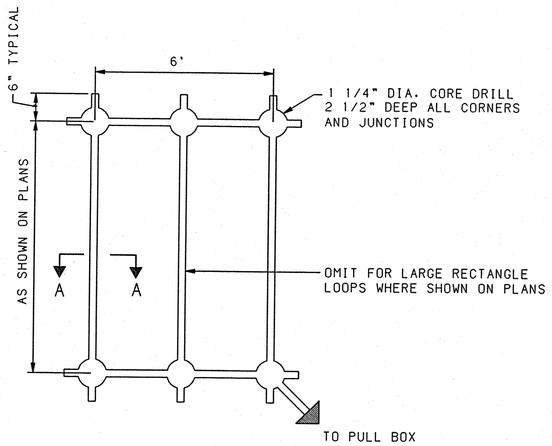

PLAN VIEW

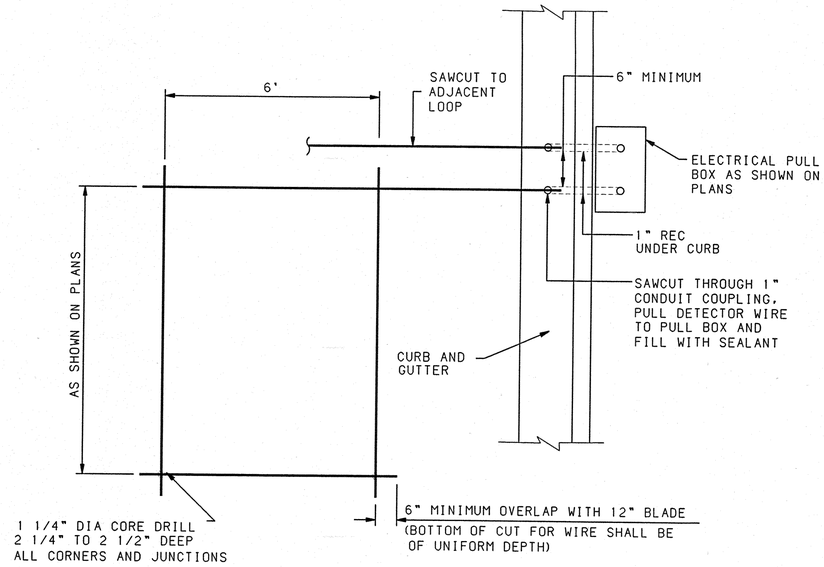

PLAN VIEW

TYPICAL ROADWAY LOOP SAWCUT DETAIL

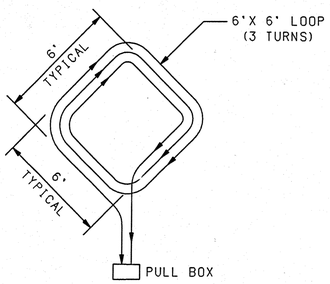

EXTEND CALL LOOP WIRING DETAIL

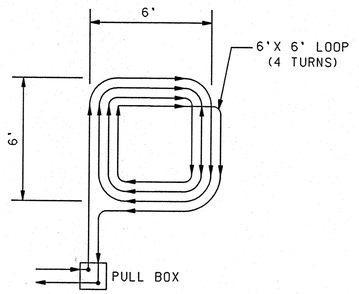

SYSTEM LOOP WIRING DETAIL

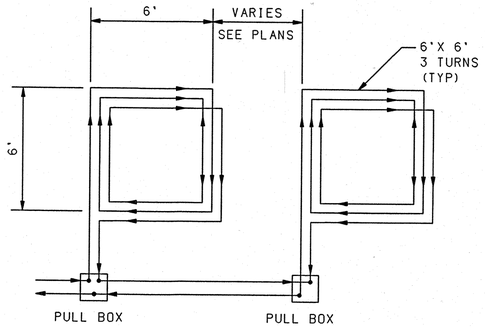

SERIES LOOP WIRING DETAIL

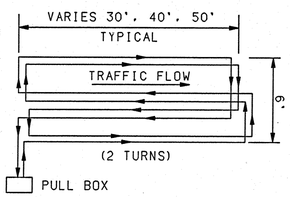

QUADRUPOLE LOOP WIRING DETAIL

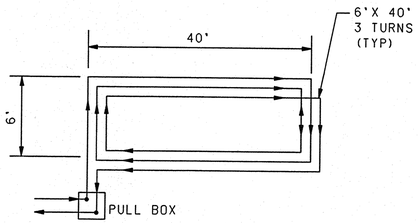

LARGE RECTANGULAR LOOP WIRING DETAIL

NOTES

1. WIRES MUST BE WOUND IN THE DIRECTION SHOWN.
2. QUADRUPOLE LOOPS SHALL HAVE 2 TURNS.
3. EXTEND CALL LOOPS SHALL HAVE 3 TURNS.
4. SYSTEM DETECTOR LOOPS SHALL HAVE 4 TURNS.
5. LARGE RECTANGLE LOOPS SHALL HAVE 3 TURNS

TYPICAL LOOP WIRE PLACEMENT DETAILS

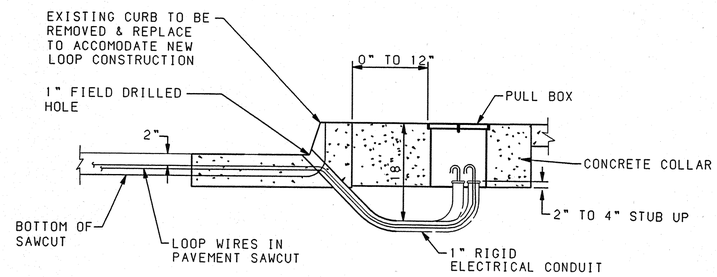

SECTION

LOOP WIRE TERMINATION DETAILS

LOOP DETECTOR NOTES

1. ALL LOOP DETECTOR WIRE SHALL BE NO. 14 AWG STRANDED COPPER WIRE WITH CROSSLINKED POLYETHYLENE INSULATION (INDUSTRY TYPE XHHW) CONFORMING TO THE REQUIREMENTS OF I.M.S.A. SPECIFICATIONS NO 51-3 1984. BACKER ROD SHALL NOT BE USED IN THE INSTALLATION OF LOOP (EXCEPT PIECES LESS THAN 12" WHICH MAY BE PLACED OVER THE WIRE AT THE SAW CUT CORNERS TO HOLD THE WIRE. A 1/4" LAYER OF SEALANT SHALL BE PLACED IN THE SAWCUT BEFORE PLACEMENT OF THE WIRE AND THEN THE WIRE SHALL BE ENCAPSULATED WITH SEALANT. HOT-MELT RUBBERIZED ASPHALT LOOP DETECTOR SEALANT MANUFACTURED BY CRAFCO SHALL BE AN ACCEPTABLE SEALANT ALTERNATE.
2. ALL LOOP LEAD IN CABLES SHALL BE TAGGED AT CABINET TO IDENTIFY EACH CABLE BY LOOP AND AND PHASE NUMBER.
3. GROUND LOOP LEAD IN CABLE SHIELDING IN CONTROL CABINET.
4. SEPARATE 1" RIGID ELECTRICAL CONDUITS ARE REQUIRED FOR EACH PAIR OF DETECTOR WIRES.

1 2 3 4 5 6 7 8 9 10 11 12 13 14 15
26-5358.90 1497

MERCH\TDTL6

AS BUILT INFORMATION
CONTRACTOR FAMWKLINS
WORK STAKED BY ALS DATE 96
INSPECTOR'S ACCEPTANCE BY DATE
FIELD VERIFICATION BY ALS DATE 96
DRAWINGS CORRECTED BY ALS DATE 96
MICRO-FILM INFORMATION
RECORDED BY DATE
NO.

BENCH MARKS
BRASS TABLET STAMPED "STA. I-25-20", IN TOP OF CONCRETE POST. LOCATED 0.50 MILES SOUTH OF MONTANO RD. ON WEST FRONTAGE RD. TO THE RIGHT.
X = 390403.88
Y = 1502304.95
Z = 5079.46

SURVEY INFORMATION
FIELD NOTES

NO.	BY	DATE

ENGINEER'S SEAL
D. MARK GOODWIN NEW MEXICO 8968 REGISTERED PROFESSIONAL ENGINEER

NO.	DATE	REMARKS	BY
		REVISIONS	

DESIGN		
DESIGNED BY	BHJ/COA	DATE 02/96
DRAWN BY	BHJ/COA	DATE 02/96
CHECKED BY	BHJ/COA	DATE 02/96

dmg D. MARK GOODWIN & ASSOCIATES, P.A.
CONSULTING ENGINEERS & SURVEYORS
P.O. BOX 90606
ALBUQUERQUE, NEW MEXICO 87199
(505) 345-2010

CITY OF ALBUQUERQUE
PUBLIC WORKS DEPARTMENT
ENGINEERING DEVELOPMENT GROUP

TITLE: TRAFFIC SIGNAL LOOP DETECTOR DETAILS

DESIGN REVIEW COMMITTEE
APPROVED JAN 25 1996
CITY ENGINEER

LAST DESIGN UPDATE | MO./DAY/YR.

CITY PROJECT NO.	ZONE MAP NO.	SHEET	OF
5358.90	F16	14	19

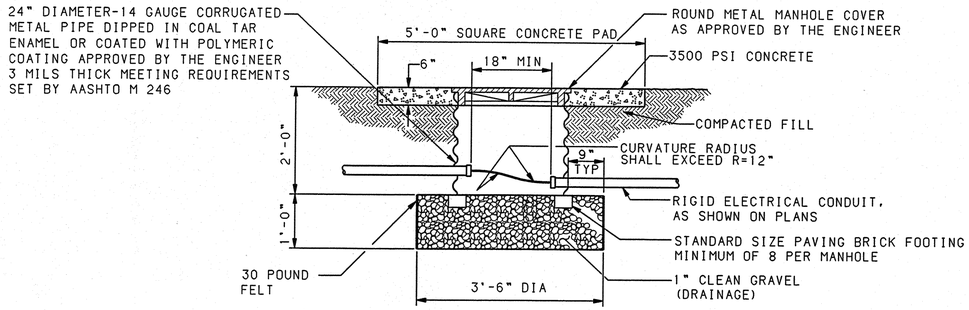

TRAFFIC SIGNAL MANHOLE (TYPICAL)
NEW CONDUIT INSTALLATION

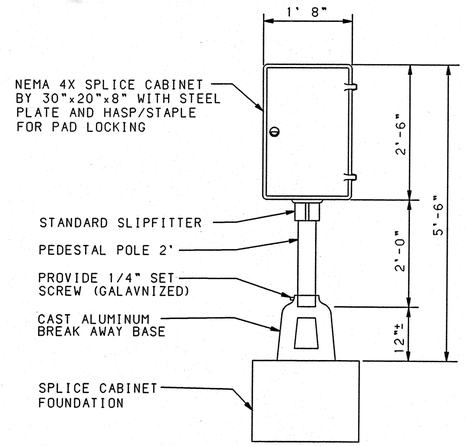

TRAFFIC SIGNAL
SPLICE CABINET DETAIL

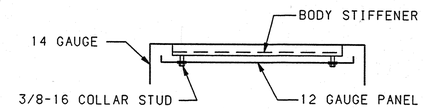

SPLICE CABINET PANEL DETAIL

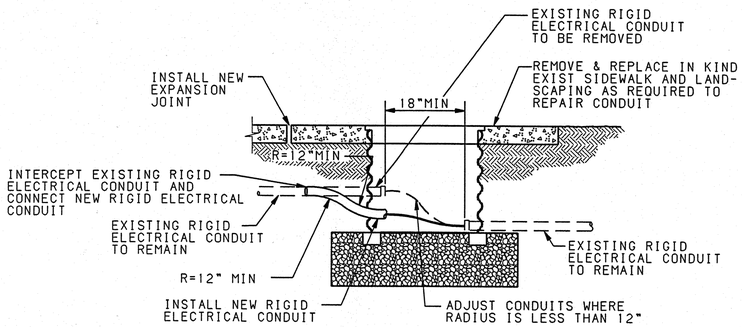

TRAFFIC SIGNAL MANHOLE (TYPICAL)
RETROFIT INSTALLATION

NOTES:

1. TRAFFIC SIGNAL MANHOLE TO BE CONSTRUCTED IN AREAS NOT NORMALLY ACCESSIBLE TO VEHICULAR TRAFFIC.

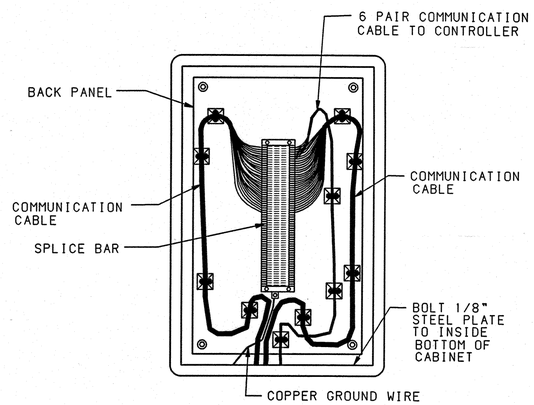

TRAFFIC SIGNAL
SPLICE CABINET WIRING DETAIL

AS BUILT INFORMATION
CONTRACTOR REMARKS
WORK STAKED BY ALS DATE
INSPECTOR'S ACCEPTANCE BY DATE
FIELD VERIFICATION BY ALS DATE
DRAWINGS CORRECTED BY ALS DATE
MICRO-FILM INFORMATION
RECORDED BY DATE
NO.

BENCH MARKS
BRASS TABLET STAMPED "STA. 1-25-20", IN TOP OF CONCRETE POST. LOCATED 0.50 MILES SOUTH OF MONTANO RD. ON WEST FRONTAGE RD. TO THE RIGHT.
X = 390403.88
Y = 1502304.95
Z = 5079.46

SURVEY INFORMATION
FIELD NOTES
NO. BY DATE

ENGINEER'S SEAL
D. MARK GOODWIN NEW MEXICO 8016 REGISTERED PROFESSIONAL ENGINEER 3/25/96

NO.	DATE	REMARKS	BY
		REVISIONS	

		DATE
DESIGN		
DESIGNED BY	BHI/COA	02/96
DRAWN BY	BHI/COA	02/96
CHECKED BY	BHI/COA	02/96

dmg D. MARK GOODWIN & ASSOCIATES, P.A.
CONSULTING ENGINEERS & SURVEYORS
P.O. BOX 90606
ALBUQUERQUE, NEW MEXICO 87199
(505) 345-2010

CITY OF ALBUQUERQUE
PUBLIC WORKS DEPARTMENT
ENGINEERING DEVELOPMENT GROUP

TITLE: TRAFFIC SIGNAL
TRAFFIC MANHOLE & SPLICE CABINET DETAILS

DESIGN REVIEW COMMITTEE
APPROVED JAN 25 1996 DESIGN REVIEW COMMITTEE
LAST DESIGN UPDATE
MO./DAY/YR.

1 2 3 4 5 6 7 8 9 10 11 12 13 14 15
26-5358.90 1597

MERCH\TDTL7

CITY PROJECT NO.	ZONE MAP NO.	SHEET	OF
5358.90	F16	15	19

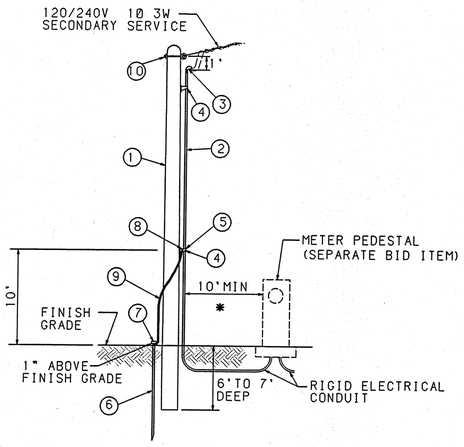

MATERIAL LIST

1	1	25' TREATED POLE
2	30'	2" GALVANIZED CONDUIT
3	1	2" WEATHER HEAD
4	2	UNIVERSAL SUPPORT BRACKET
5	2	2" PIPE STRAP KIT
6	1	COPPERWELD 3/4"x10'-0" GROUND ROD
7	1	GROUND ROD CLAMP
8	1	GROUND LUG
9	10'	#6 BARE COPPER GROUND WIRE
10	1	5/8" EYE BOLT
	40'	1/C #2 THW BLACK
	40'	1/C #2 THW WHITE
	40'	1/C #2 THW RED

SERVICE POLE (SIGNAL)

*CONDUIT AND WIRE EXTENDING MORE THAN 10' FROM POLE WILL BE MEASURED AND PAID PER ACTUAL FOOTAGE USED.

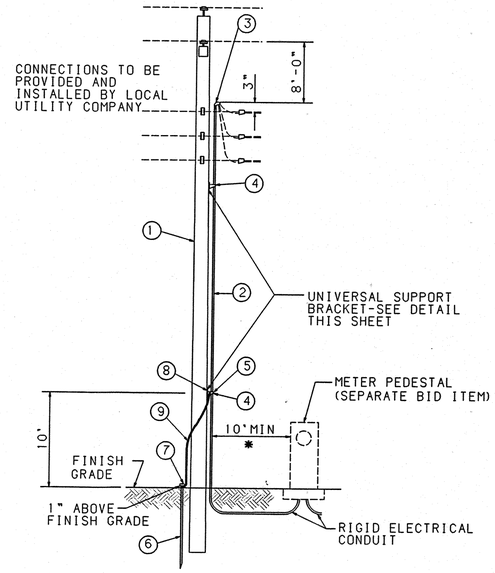

MATERIAL LIST

1	1	EXISTING POLE
2	40'	2" GALVANIZED CONDUIT
3	1	2" WEATHER HEAD
4	2	UNIVERSAL SUPPORT BRACKET
5	2	2" PIPE STRAP KIT
6	1	COPPERWELD 3/4"x10'-0" GROUND ROD
7	1	GROUND ROD CLAMP
8	1	GROUND LUG
9	10'	#6 BARE COPPER GROUND WIRE
	50'	1/C #2 THW BLACK
	50'	1/C #2 THW WHITE
	50'	1/C #2 THW RED

SERVICE RISER (SIGNAL)

*CONDUIT AND WIRE EXTENDING MORE THAN 10' FROM POLE WILL BE MEASURED AND PAID PER ACTUAL FOOTAGE USED.

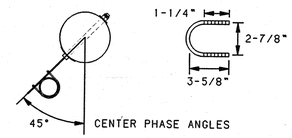

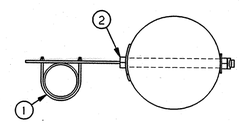

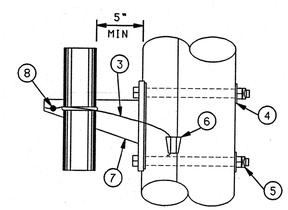

MATERIAL LIST

1	1	U BOLT
2	2	5/8" MACHINE BOLTS
3	3'	#4 SOL CU WIRE
4	2	2-1/4" SQUARE WASHER
5	2	5/8" MF LOCKNUT
6	1	LINE TAP
7	1	SUPPORT BRACKET
8	1	GROUNDING LUG

UNIVERSAL SUPPORT BRACKET NOTES:

1. BRACKET TO BE FASTENED TO POLE WITH 5/8" GALVANIZED MACHINE BOLTS.
2. BRACKET SUITABLE FOR TWO 2" CONDUITS.
3. TWO HOLE STRAPS ATTACHED AT 30" INTERVALS WITH 2" LAG SCREWS MAY BE USED INSTEAD OF THE SUPPORT BRACKET WHEN THE CONDUIT IS 1" OR LESS. A MAXIMUM OF TWO CONDUITS MAY BE STRAPPED DIRECTLY TO THE POLE.

UNIVERSAL SUPPORT BRACKET

SIGNAL SERVICE NOTES

1. ALL SIGNAL SERVICE DETAILS, MATERIALS, & INSTALLATION SHALL CONFORM TO THE LOCAL POWER COMPANY REQUIREMENTS.
2. CONTACT LOCAL POWER COMPANY CUSTOMER SERVICES FOR POLE QUADRANT FOR RISERS.
3. ALL ABOVE GRADE CONDUIT SHALL BE GALVANIZED.
4. RISER BRACKET ASSEMBLY MUST BE GROUNDED PER LOCAL POWER COMPANY REQUIREMENTS.
5. CONDUIT AND WIRE EXTENDING MORE THAN 10' FROM POLE WILL BE MEASURED AND PAID PER ACTUAL FOOTAGE USED.
6. UNIVERSAL SUPPORT BRACKETS WILL BE CONSIDERED INCIDENTAL TO THE SERVICE RISER.
7. DRILLING HOLES IN EXISTING STEEL POLES FOR UNIVERSAL SUPPORT BRACKETS WILL NOT BE PERMITTED. BRACKETS SHALL BE MOUNTED ON STEEL POLES WITH STAINLESS STEEL BANDS.
8. PROVIDE ONE 50A, SINGLE POLE, 120V CIRCUIT FOR CONTROLLER SIGNALS.

AS BUILT INFORMATION
CONTRACTOR HAWKLINS
WORK STAKED BY ALS DATE 9/6
INSPECTOR'S ACCEPTANCE BY DATE
FIELD VERIFICATION BY ALS DATE 9/6
DRAWINGS CORRECTED BY ALS DATE 12/96
MICRO-FILM INFORMATION
RECORDED BY DATE
NO.

BENCH MARKS
BRASS TABLET STAMPED "STA. I-25-20", IN TOP OF CONCRETE POST. LOCATED 0.50 MILES SOUTH OF MONTANO RD. ON WEST FRONTAGE RD. TO THE RIGHT.
X = 390403.88
Y = 1502304.95
Z = 5079.46

SURVEY INFORMATION
FIELD NOTES

NO.	BY	DATE

ENGINEER'S SEAL
D. MARK GOODWIN NEW MEXICO 15696 REGISTERED PROFESSIONAL ENGINEER 12/6/96

NO.	DATE	REMARKS	BY

REVISIONS

		DATE
DESIGN		02/96
DESIGNED BY	BH/COA	02/96
DRAWN BY	BH/COA	02/96
CHECKED BY	BH/COA	02/96

dmg D. MARK GOODWIN & ASSOCIATES, P.A.
CONSULTING ENGINEERS & SURVEYORS
P.O. BOX 90606
ALBUQUERQUE, NEW MEXICO 87199
(505) 345-2010

CITY OF ALBUQUERQUE
PUBLIC WORKS DEPARTMENT
ENGINEERING DEVELOPMENT GROUP

TITLE: TRAFFIC SIGNAL
ELECTRICAL SERVICE DETAILS
FOR SIGNALS

DESIGN REVIEW COMMITTEE
APPROVED JAN 25 1996
LAST DESIGN UPDATE | MO./DAY/YR.

1 2 3 4 5 6 7 8 9 10 11 12 13 14 15
26-5358.90 1697

MERCH\TDTL8

CITY PROJECT NO.	ZONE MAP NO.	SHEET	OF
5358.90	F16	16	19

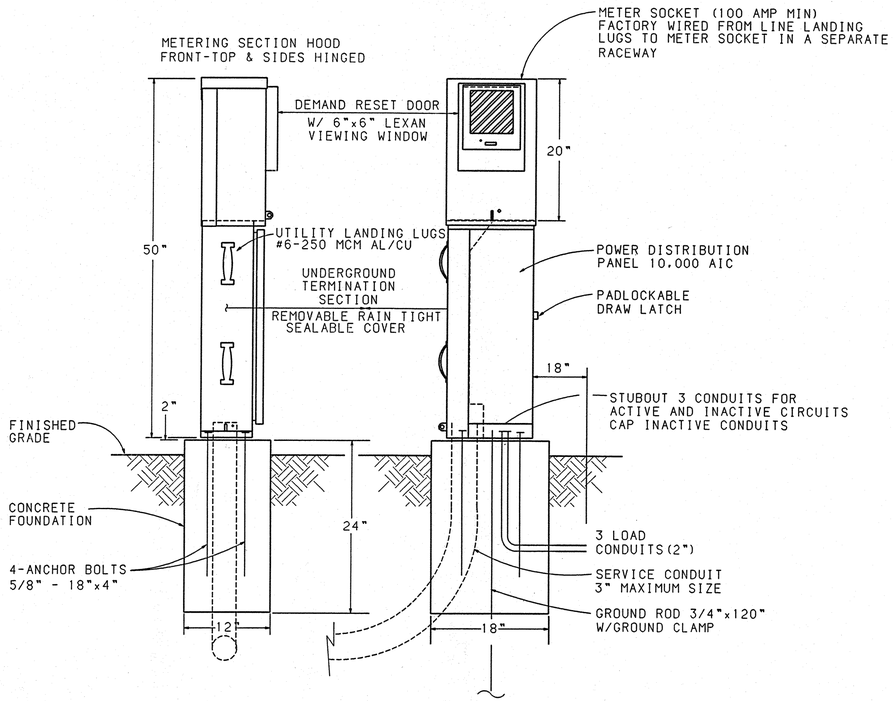

LEFT SIDE

FRONT VIEW

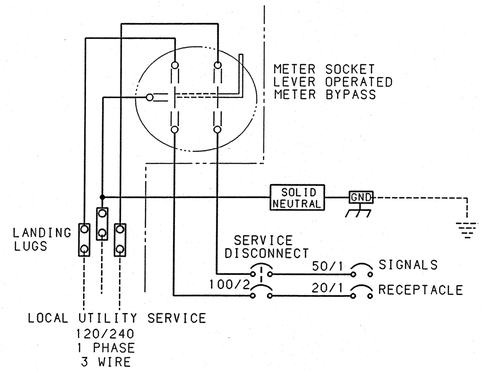

SERVICE EQUIPMENT
WIRING DIAGRAM "A"

CONSTRUCTION MATERIALS AND FINISH

- ☐ 12 GA HD GALV STEEL
  - ☐ POWDER COATED _____
- ☐ 14 GA #304 S/S SHEET
  - ☐ POWDER COATED COLOR: _____
  - ☐ NATURAL
- ☐ 0.125" ALUMINUM SHEET
  - ☐ POWDER COATED COLOR: _____
  - ☐ NATURAL
  - ☐ ANODIZED

POWDER COAT COLORS

- ☐ WHITE
- ☐ RANCH GREEN
- ☐ MINT GREEN
- ☐ OTHER _____
- ☐ CAMEL

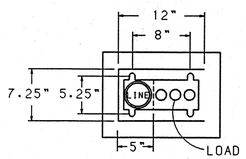

BASE PLAN

ENCLOSURE CONSTRUCTION NOTES

1. SERVICE PEDESTAL SHALL BE UL LISTED "INDUSTRIAL CONTROL PANEL" PER UL 508.
2. SERVICE PEDESTAL SHALL MEET THE ELECTRIC UTILITY SERVICE EQUIPMENT REQUIREMENTS COMMITTEE ((EUSERC) GUIDELINES.
3. CONSTRUCTION SHALL BE NEMA 3R AND 12, RAIN TIGHT AND DUST TIGHT. ELECTRICALLY WELDED AND REINFORCED WHERE REQUIRED.
4. ALL NUTS, BOLTS, SCREWS AND HINGES SHALL BE STAINLESS STEEL.
5. NUTS, BOLTS & SCREWS SHALL NOT BE VISIBLE FROM OUTSIDE OF ENCLOSURE.
6. PHENOLIC NAME PLATES SHALL BE PROVIDED AS REQUIRED.
7. CIRCUIT BREAKERS SHALL BE CABLE IN-CABLE OUT WITH LINE ON TOP & LOAD ON THE BOTTOM. HANDLE POSITION UP="ON", MIDDLE="TRIPPED", DOWN="OFF".
8. A PLASTIC COVERED WIRING DIAGRAM SHALL BE ATTACHED TO THE INSIDE OF THE FRONT DOOR.
9. ENCLOSURE SHALL BE FACTORY WIRED AND CONFORM TO REQUIRED NEMA STANDARDS.
10. ALL POWDER COATED CABINETS SHALL HAVE A CORROSION RESISTANT COATING WHICH INCLUDES A FIVE STEP DIP TANK METAL PREPARATION PROCESS:
    A. ALKALINE CLEANER 160°F.
    B. CLEAR WATER RINSE.
    D. IRON PHOSPHATE APPLICATION 150°F.
    E. CLEAR WATER RINSE.
    F. INHIBITIVE RINSE TO SEAL PHOSPHATED SURFACES 120°F.
    FINISHED WITH AN ELECTROSTATICALLY APPLIED DRY POLYESTER POWDER COATING THEN BAKED @ 380°F TO CURE.
11. CONCRETE FOUNDATIONS INCLUDING EXCAVATION AND BACKFILL,CONCRETE, AND ANCHOR BOLTS, COMPLETE IN PLACE, WILL BE CONSIDERED INCIDENTAL TO THE METER PEDESTAL.

AS BUILT INFORMATION
CONTRACTOR FRANKLINS
WORK STAKED BY ALS DATE 96
INSPECTOR ACCEPTANCE BY DATE
FIELD VERIFICATION BY ALS DATE 96
DRAWINGS CORRECTED BY ALS DATE 12/96
MICRO-FILM INFORMATION
RECORDED BY DATE
NO.

BENCH MARKS
BRASS TABLET STAMPED "STA. I-25-20", IN TOP OF CONCRETE POST. LOCATED 0.50 MILES SOUTH OF MONTANO RD. ON WEST FRONTAGE RD. TO THE RIGHT.
X = 390403.88
Y = 1502304.95
Z = 5079.46

SURVEY INFORMATION
FIELD NOTES

NO.	BY	DATE

ENGINEER'S SEAL

NO.	DATE	REMARKS	BY

REVISIONS

DESIGN		
DESIGNED BY	BHI/COA	DATE 02/96
DRAWN BY	BHI/COA	DATE 02/96
CHECKED BY	BHI/COA	DATE 02/96

dmg D. MARK GOODWIN & ASSOCIATES, P.A.
CONSULTING ENGINEERS & SURVEYORS
P.O. BOX 90606
ALBUQUERQUE, NEW MEXICO 87199
(505) 345-2010

CITY OF ALBUQUERQUE
PUBLIC WORKS DEPARTMENT
ENGINEERING DEVELOPMENT GROUP

TITLE:
METER PEDESTAL DETAILS
FOR SIGNALS

DESIGN REVIEW COMMITTEE
APPROVED JUN 25 1996 DESIGN REVIEW COMMITTEE

LAST DESIGN UPDATE | MO./DAY/YR.

1 2 3 4 5 6 7 8 9 10 11 12 13 14 15
26-5358.90 1797

MERCH\TDTL9

CITY PROJECT NO.	ZONE MAP NO.	SHEET	OF
5358.90	F16	17	19

FUNCTION CHART – 115 VOLT CIRCUIT

CONDUCTOR			RING 1 – MULTI CONDUCTOR CABLE 20	
CONDUCTOR NUMBER	BASE COLOR	TRACER	FUNCTION	FIELD CONNECTION
1	BLACK	–	SPARE	
2	WHITE	–	SPARE	
3	RED	–	PHASE 1 RED	
4	GREEN	–	PHASE 1 GREEN	S1,S10,LEFT TURN
5	ORANGE	–	PHASE 1 YELLOW	S1,S10,LEFT TURN
6	BLUE	–	PHASE 2 WALK	
7	WHITE	BLACK	PHASE 2 DONT WLK.	
8	RED	BLACK	PHASE 2 RED	
9	GREEN	BLACK	PHASE 2 GREEN	S1,S2,S4,S8,S9,S10
10	ORANGE	BLACK	PHASE 2 YELLOW	S1,S2,S4,S8,S9,S10
11	BLUE	BLACK	SPARE	
12	BLACK	WHITE	SPARE	
13	RED	WHITE	OVER LAY 1 RED	
14	GREEN	WHITE	OVER LAY 1 GREEN	S1,S8,S9,S10
15	BLUE	WHITE	OVER LAY 1 YELLOW	S1,S8,S9,S10
16	BLACK	RED	PHASE 4 WALK	
17	WHITE	RED	PHASE 4 DONT WALK	
18	ORANGE	RED	PHASE 4 RED	
19	BLUE	RED	PHASE 4 GREEN	S3,S6,S7
20	RED	GREEN	PHASE 4 YELLOW	S3,S6,S7

FUNCTION CHART – 24 VOLT CIRCUIT

MULTI CONDUCTOR CABLE 5			
CONDUIT NUMBER	BASE COLOR	FUNCTION	FIELD CONNECTION
1	BLACK	PHASE 2 PPB	PPB1, PPB2
2	WHITE	COMMON	
3	RED	PHASE 4 PPB	PPB3, PPB4
4	GREEN		
5	ORANGE		

SIGNAL NOTES

1. ALL WORK ON THESE PLANS TO BE PERFORMED UNDER THIS CONTRACT SHALL CONFORM TO THE CURRENT NATIONAL ELECTRIC CODE, AND THE STANDARDS OF THE NATIONAL BOARD OF FIRE UNDERWRITERS FOR ELECTRICAL WIRING AND APPARATUS.
2. ALL WORK ON THESE PLANS TO BE PERFORMED UNDER THIS CONTRACT SHALL CONFORM TO THE "THIRD DRAFT SPECIFICATIONS AND CONTRACT ITEM LISTING" TRAFFIC ENGINEERING OPERATIONS, CITY OF ALBUQUERQUE, JUNE 1994. COPIES OF THESE SPECIFICATIONS AREA AVAILABLE FROM THE ENGINEER AT THE COST OF REPRODUCTION.
3. LOCATIONS OF CONDUITS, FOUNDATIONS, CONTROL CABINETS, POLES, PULL BOXES, MANHOLES AND SPLICE CABINETS SHOWN ON THE PLANS ARE SCHEMATIC AND SHALL BE ADJUSTED IN THE FIELD TO MAXIMIZE CLEAR SPACE AVAILABLE FOR PEDESTRIANS AND WHEELCHAIRS TO COMPLY WITH THE AMERICANS WITH DISABILITIES ACT. THE CONTRACTOR SHALL MEET WITH THE CITY TRAFFIC ENGINEERING OPERATIONS PERSONNEL IN THE FIELD AT ALL LOCATIONS TO SPOT EQUIPMENT BEFORE BEGINNING THE WORK. ALL SUCH EQUIPMENT SHALL BE INSTALLED WITHIN THE RIGHT-OF-WAY.
4. THE CONTRACTOR IS WARNED THAT EXISTING CONDUITS MAY CONTAIN AC POWER AND CAUTION SHALL BE EXERCISED IN INTERCEPTING OR INSTALLING CABLE IN EXISTING CONDUIT.
5. THE CONTRACTOR SHALL BORE, DRILL OR PUSH WHEN CROSSING EXISTING PAVEMENTS AND ANY DRIVEWAYS FOR STREET CROSSINGS. BEFORE CONDUIT CAN BE BORED, DRILLED OR PUSHED THE CONTRACTOR SHALL LOCATE ALL EXISTING UTILITIES. THE CONTRACTOR SHALL LOCATE AND EXPOSE GAS LINES WHICH CROSS ANY PROPOSED BORES. THESE EXCAVATIONS SHALL REMAIN OPEN UNTIL AFTER THE BORE IS COMPLETE. CONTRACTOR SHALL REMOVE AND REPLACE IN KIND ANY SIDEWALK OR PAVEMENT REQUIRED TO EXPOSE SUCH LINES. THE CONTRACTOR MAY CUT, TRENCH AND REPLACE EXISTING PAVEMENT ONLY WHEN APPROVED BY THE PROJECT MANAGER.
6. SPLICING FOR TRAFFIC SIGNALS MCC WILL BE PERMITTED IN LARGE PULL BOXES INCLUDING LARGE MEDIAN PULL BOXES.
7. ALL LOOP LEAD-IN CABLES SHALL BE TAGGED AT CABINET TO IDENTIFY EACH CABLE BY PHASE AND LOOP NUMBER.
8. ALL PULL BOXES SHALL BE REINFORCED POLYMER MORTAR HEAVY DUTY TYPE WITH REINFORCED POLYMER MORTAR HEAVY DUTY COVERS. CONCRETE COVERS, STEEL COVERS AND CONCRETE PULL BOXES WILL NOT BE ACCEPTABLE.
9. THE CONTRACTOR SHALL REMOVE ALL CONFLICTING SIGNING AND DELIVER TO THE CITY YARDS WHEN TRAFFIC SIGNALS ARE PUT INTO OPERATION.
10. LIVE UNUSED CONDUCTORS WILL NOT BE ALLOWED AT MASTARM POLES AND PEDESTAL POLES. ALL SUCH UNUSED CONDUCTORS SHALL BE DISCONNECTED AT THE LARGE PULL BOX ADJACENT TO THE POLE.
11. IF TRENCH WIDTHS LESS THAN 12" ARE PROPOSED BY THE CONTRACTOR, APPROVED COMPACTION METHODS SHALL BE USED DURING BACKFILL TO PREVENT LATENT TRENCH FAILURES. THE CONTRACTOR SHALL USE GROUT OR LEAN FILL AS APPROVED BY THE PROJECT MANAGER IN LIEU OF EARTH BACKFILL.
12. THE CITY OF ALBUQUERQUE TRAFFIC ENGINEERING OPERATIONS PERSONNEL WILL PROVIDE TRAFFIC SIGNAL TIMING PLANS AND WILL PROGRAM TRAFFIC SIGNAL CONTROLLER.
13. ALL DATA SHOWN HEREIN CONCERNING EXISTING UTILITIES HAS BEEN OBTAINED FROM A TOPOGRAPHIC SURVEY WHICH MAY OR MAY NOT BE ACCURATE. THE CONTRACTOR WILL BE RESPONSIBLE FOR EXPLORATORY TRENCHING, IF NECESSARY TO MORE SPECIFICALLY LOCATE UTILITY LINES. COST OF LOCATING UTILITY LINES INCLUDING EXPLORATORY TRENCHING WILL BE CONSIDERED INCIDENTAL TO CONSTRUCTION.

DETECTOR LOOPS

LOOP I.D.	VEHICLE DETECTOR				LOOP TYPE	VEHICLE DIMENSIONS				LOOP WIRE	PAVEMENT SAWCUT
	MODE	CALL	UNIT NO.	CHANNEL		L	W	S	T		
DL1(1)	PRESS		2	1	QP	40'	6'	15'	5'	389	147
DL2(OL1)	PRESS	EXT2	4	1	EC	6'	6'	22'	3'	127	46
DL3(OL1)	PRESS	EXT2	4	1	EC	6'	6'	7'	3'	97	31
DL4(OL1)	PRESS	EXT2	4	1	EC	6'	6'	22'	3'	127	46
DL5(OL1)	PRESS	EXT2	4	1	EC	6'	6'	7'	3'	97	31
DL6(2)	PRESS	EXT2	4	2	EC	6'	6'	22'	20'	161	46
DL7(2)	PRESS	EXT2	4	2	EC	6'	6'	7'	20'	131	31
DL8(2)	PRESS	EXT2	4	2	EC	6'	6'	22'	22'	165	46
DL9(2)	PRESS	EXT2	4	2	EC	6'	6'	7'	22'	135	31
DL10(4)	PRESS		3	1	QP	40'	6'	16'	3'	387	148
DL11(4)	PRESS		3	2	QP	40'	6'	4'	3'	363	136
SD1(OL1)	PULSE		7	1	SD-4TURN	6'	6'	18'	3'	138	42
SD2(OL1)	PULSE		7	2	SD-4TURN	6'	6'	5'	3'	112	29
SD3(2)	PULSE		6	1	SD-4TURN	6'	6'	17'	20'	170	41
SD4(2)	PULSE		6	2	SD-4TURN	6'	6'	5'	20'	146	29
TOTALS										2,745	880

DETECTOR RACK ASSIGNMENTS

UNIT NO. →	POWER SUPPLY	1	2	3	4	5	6	7	8	9	10
CHANNEL 1 →		1	2	4	2EC	4EC	SD1	SD3	SD5	ISOLATION PEDD	OPT1
CHANNEL 2 →		3	2	4	2EC	4EC	SD2	SD4	SD6		OPT2
DETECTOR MODULE REQ.	✓*		✓	✓	✓		✓	✓		✓*	

* INCIDENTAL TO CONSTRUCTION.

QUANTITY ESTIMATING ASSUMPTIONS

LOOP WIRE
6' X 30' QP LOOP = (8*L) + (4*W) + (2*S) + (2*T) + 5 = 269 + 2(S+T)
6' X 40' QP LOOP = (8*L) + (4*W) + (2*S) + (2*T) + 5 = 349 + 2(S+T)
6' X 50' QP LOOP = (8*L) + (4*W) + (2*S) + (2*T) + 5 = 429 + 2(S+T)
6' X 6' EC LOOP = (6*L) + (6*W) + (2*S) + (2*T) + 5 = 77 + 2(S+T)
6' X 6' SYS LOOP= (8*L) + (8*W) + (2*S) + (2*T) + 5 = 96 + 2(S+T)

PAVEMENT SAWCUT
6' X 30' QP LOOP = (3*L) + (2*W) + S = 102 + S
6' X 40' QP LOOP = (3*L) + (2*W) + S = 132 + S
6' X 50' QP LOOP = (3*L) + (2*W) + S = 162 + S
6' X 6' EC LOOP = (2*L) + (2*W) + S = 24 + S
6' X 6' SYS LOOP = (2*L) + (2*W) + S = 24 + S

WHERE:
L = DETECTOR LOOP LENGTH (FROM PLAN).
W = DETECTOR LOOP WIDTH (FROM PLAN).
S = SAWCUT LENGTH FROM DETECTOR LOOP TO FACE OF CURB (FROM PLAN).
T = LOOP WIRE TERMINAL LENGTH FROM FACE OF CURB TO PULL BOX (FROM PLAN).

NOTES:

1. IDENTIFY CONDUCTORS LISTED AS "115 VOLTS"
2. WRAP RING 2 CABLE AT EACH SPLICE POINT WITH COLORED ELECTICAL TAPE. THE IDENTIFICATION MARKING SHALL BE PROVIDED ON EACH RING 2 CABLE AT EACH SPLICE BOX AND LOCATED 6" BACK FROM THE END.
3. IDENTIFY CONDUCTORS LISTED AS "PPB – LOW VOLTAGE" AT EACH SPLICE POINT. FIVE (5) CONDUCTOR CABLE SHALL BE 24 VOLTS AND USED FOR PUSH BUTTONS ONLY.
4. CONDUCTOR CABLE RUNS TO TRAFFIC SIGNALS, PEDESTRIAN SIGNALS, AND PEDESTRIAN PUSH BUTTONS SHALL BE SPLICED INTO THE MAIN CONDUCTORS AT THE NEAREST LARGE PULL BOX AND RUN WITHOUT ADDITIONAL SPLICES INTO EACH SIGNAL HEAD OR PUSH BUTTON ASSEMBLY.

ABBREVIATIONS

DL	DETECTOR LOOP
EC	EXTENDED CALL LOOP
L	DETECTOR LOOP LENGTH
W	DETECTOR LOOP WIDTH
S	SAWCUT LOOP TO CURB
T	TERMINAL LENGTH
QP	QUADRAPOLE LOOP

LEGEND

— — — — — — — —	NEW 3" PVC CONDUIT.
▭	NEW 6'X40' RECTANGULAR DETECTOR.
▭	NEW 6'X40' QUADRAPOLE LOOP DETECTOR.
■ PB1	TRAFFIC ELECTRICAL PULL BOX NO. 1
M	NEW ELECTRIC METER.
C	NEW CONTROLLER CABINET &
▲ ●	NEW TRAFFIC SIGNAL
1	NEW TRAFFIC SIGNAL MANHOLE.
S7	TRAFFIC SIGNAL NO. 1.
▲——▲	NEW 25' TRAFFIC SIGNAL MASTARM. TYPE II FOUNDATION. (SUSPENDED SIGNAL TO HAVE BACKPLATE)
▲ PB	NEW TRAFFIC SIGNAL WITH MOUNTED PEDESTRIAN SIGNAL.

AS BUILT INFORMATION
CONTRACTOR Hoffpauir Inc. DATE 9/96
WORK STAKED BY AVS DATE
WORK INSPECTED BY ACCEPTANCE BY DATE
FIELD VERIFICATION BY AVS DATE 9/96
DRAWINGS CORRECTED BY AVS DATE 11/96
MICRO-FILM INFORMATION
RECORDED BY DATE
NO.

BENCH MARKS
BRASS TABLET STAMPED "STA. I-25-20" IN TOP OF CONCRETE POST. LOCATED 0.50 MILES SOUTH OF MONTANO RD. ON WEST FRONTAGE RD. TO THE RIGHT.
X = 390403.88
Y = 1502304.95
Z = 5079.46

SURVEY INFORMATION
FIELD NOTES
NO. BY DATE

ENGINEER'S SEAL
D. MARK GOODWIN NEW MEXICO 6946 REGISTERED PROFESSIONAL ENGINEER
9/26/96

NO.	DATE	REMARKS	BY

REVISIONS

DESIGN		
DESIGNED BY	DBC	DATE 03/96
DRAWN BY	DBC	DATE 03/96
CHECKED BY	DMG	DATE 03/96

dmg D. MARK GOODWIN & ASSOCIATES, P.A.
CONSULTING ENGINEERS & SURVEYORS
P.O. BOX 90606
ALBUQUERQUE, NEW MEXICO 87199
(505) 345-2010

CITY OF ALBUQUERQUE
PUBLIC WORKS DEPARTMENT
ENGINEERING DEVELOPMENT GROUP

TITLE: TRAFFIC SIGNAL FUNCTIONS & DETECTORS
MONTANO RD. AND CULTURE DR. INTERSECTION

DESIGN REVIEW COMMITTEE
APPROVED JUN 25 1996 DESIGN REVIEW COMMITTEE

LAST DESIGN UPDATE MO./DAY/YR.

1 2 3 4 5 6 7 8 9 10 11 12 13 14 15
26-5358.90 1897

MERCH\FUNCT

CITY PROJECT NO.	ZONE MAP NO.	SHEET	OF
5358.90	F16	18	19

TRAFFIC SIGNAL ESTIMATED QUANTITIES

ITEM NO.	ITEM DESCRIPTION	UNIT	TOTAL
0421.11	METER PEDESTAL (SIGNAL)	EACH	1
0421.15	SERVICE CONNECTION SIGNAL	EACH	1
0422.03	TRAFFIC SIGNAL PEDESTAL POLE, 15 FOOT	EACH	5
0422.10	TRAFFIC SIGNAL MASTARM, 25 FOOT ARM, TYPE II	EACH	2
0423.01	TRAFFIC SIGNAL FOUNDATION FOR PEDESTAL POLE & SPLICE CABINET	EACH	6
0423.02	TRAFFIC SIGNAL MASTARM FOUNDATION	EACH	2
0423.03	TRAFFIC CONTROLLER FOUNDATION (TYPE H & P CABINETS)	EACH	1
0424.05	RIGID ELECTRICAL CONDUIT, 2"	LIN. FT.	880
0424.10	RIGID ELECTRICAL CONDUIT, 3"	LIN. FT.	3,211
0425.02	ELECTRICAL PULL BOX, STANDARD	EACH	3
0425.03	ELECTRICAL PULL BOX, LARGE	EACH	14
0426.01	SINGLE CONDUCTOR, 2	LIN. FT.	390
0426.04	SINGLE CONDUCTOR, 8	LIN. FT.	615
0426.10	MULTI-CONDUCTOR CABLE 5	LIN. FT.	~~1,299~~ 1,274
0426.11	MULTI-CONDUCTOR CABLE 7	LIN. FT.	72
0426.14	MULTI-CONDUCTOR CABLE 20	LIN. FT.	615
0426.21	COM CBL 12 PR	LIN. FT.	2,290
0427.02	3 SECTION TRAFFIC SIGNAL ASSEMBLY	EACH	8
0427.21	PEDESTRIAN SIGNAL (NEON)	EACH	4
0427.31	3 SECTION BACKPLATE	EACH	2
0428.01	LOOP VEHICLE DETECTOR	EACH	15
0428.10	PEDESTRIAN PUSH BUTTON STATION	EACH	4
0428.21	LOOP DETECTOR WIRE	LIN. FT.	2,941
0428.50	LOOP LEAD-IN CABLE	LIN. FT.	4,730
0428.60	DETECTOR SAW CUT	LIN. FT.	880
0428.78	OPT DET CABL	LIN. FT.	632
0429.01	TRAFFIC ACTUATED CONTROLLER - 8 PHASE	EACH	1
0429.20	FOUR PHASE SINGLE RING CONTROLLER CABINET	EACH	1
0441.01	REF PLAS MRK 4"	LIN. FT.	2,050
0441.03	REF PLAS MRK 8"	LIN. FT.	500
0441.04	REF PLAS MRK 12"	LIN. FT.	510
0441.11	REF PLAS ARW LT	EACH	10
0441.20	REF PLAS WD ONLY	EACH	4
0450.01	ALUMINUM PANEL SIGN	EACH	3

AS BUILT INFORMATION
CONTRACTOR FRONTIER LTD
WORK STAKED BY AGS DATE
WORK INSPECTED BY AGS DATE
ACCEPTANCE BY ALS DATE
FIELD VERIFICATION BY ALS DATE
DRAWINGS CORRECTED BY ALS DATE
MICRO-FILM INFORMATION
RECORDED BY DATE
NO.

BENCH MARKS
BRASS TABLET STAMPED "STA. I-25-20" IN TOP OF CONCRETE POST. LOCATED 0.50 MILES SOUTH OF MONTANO RD. ON WEST FRONTAGE RD. TO THE RIGHT.
X = 380403.88
Y = 1502304.95
Z = 5079.46

SURVEY INFORMATION
FIELD NOTES
NO. BY DATE

ENGINEER'S SEAL
D. MARK GOODWIN NEW MEXICO 5079 REGISTERED PROFESSIONAL ENGINEER

NO. DATE REMARKS BY

REVISIONS

DESIGN		
DESIGNED BY	DBC	DATE 04/96
DRAWN BY	DBC	DATE 04/96
CHECKED BY	DMG	DATE 04/96

dmg D. MARK GOODWIN & ASSOCIATES, P.A.
CONSULTING ENGINEERS & SURVEYORS
P.O. BOX 90606
ALBUQUERQUE, NEW MEXICO 87199
(505) 345-2010

CITY OF ALBUQUERQUE
PUBLIC WORKS DEPARTMENT
ENGINEERING DEVELOPMENT GROUP

TITLE: TRAFFIC SIGNAL ESTIMATED QUANTITIES

DESIGN REVIEW COMMITTEE
APPROVED JUN 25 1996 DESIGN REVIEW COMMITTEE

LAST DESIGN UPDATE MO./DAY/YR.

1 2 3 4 5 6 7 8 9 10 11 12 13 14 15
26-5358.90 1997

MERCH\EST

CITY PROJECT NO.	ZONE MAP NO.	SHEET	OF
5358.90	F16	19	19