PLANS FOR CONSTRUCTION OF

WESTERN ESTATES SUBDIVISION

MARCH, 1996

INDEX TO DRAWINGS

SHEET	TITLE
1	TITLE SHEET
2	SUBDIVISION PLAT
3	GRADING, DRAINAGE AND EROSION CONTROL PLAN
4	GRADING, DRAINAGE AND EROSION CONTROL PLAN DETAILS

STREET PAVING PLAN & PROFILE

5	CHRIS COURT NW
6	ALAMOGORDO DRIVE NW, (CURB AND GUTTER ONLY)

WATER & SANITARY SEWER PLAN & PROFILE

7	CHRIS COURT NW

STORM DRAINAGE IMPROVEMENTS

8	CHANNEL "A"

THESE DRAWINGS DO NOT INCLUDE NECESSARY COMPONETS FOR THE CONSTRUCTION SAFETY WHICH SHALL REMAIN THE RESPONSIBILITY OF THE CONTRACTOR.

ALL IDEAS, DESIGNS, ARRANGEMENTS, AND PLANS INDICATED OR REPRESENTED BY THIS INSTRUMENT ARE OWNED BY AND THE PROPERTY OF BRASHER & LORENZ, INC., AND WERE CREATED AND DEVELOPED FOR USE ON AND IN CONNECTION WITH THE SPECIFIED PROJECT. THESE IDEAS DESIGNS, ARRANGEMENTS OR PLANS SHALL NOT BE USED BY ANY PERSON, FIRM OR CORPORATION FOR ANY PURPOSE WHATSOEVER WITHOUT THE WRITTEN CONSENT OF BRASHER & LORENZ, INC.

5054T 3/11/96 1=1

VICINITY MAP: H-11 SCALE: 1"=750'

GENERAL NOTES:

1. ALL WORK DETAILED ON THESE PLANS TO BE PERFORMED UNDER CONTRACT SHALL, EXCEPT AS OTHERWISE STATED OR PROVIDED FOR HERON, BE CONSTRUCTED IN ACCORDANCE WITH THE "CITY OF ALBUQUERQUE, STANDARD SPECIFICATIONS FOR PUBLIC WORKS CONSTRUCTION, 1986" (COA STND). THROUGH UPDATE NO 6.
2. TWO (2) WORKING DAYS PRIOR TO ANY EXCAVATION, CONTRACTOR MUST CONTACT NEW MEXICO ONE CALL SYSTEM, 260-1990, FOR LOCATION OF EXISTING UTILITIES.
3. PRIOR TO CONSTRUCTION, THE CONTRACTOR SHALL EXCAVATE AND VERIFY THE HORIZONTAL AND VERTICAL LOCATIONS OF ALL OBSTRUCTIONS. SHOULD A CONFLICT EXIST, THE CONTRACTOR SHALL NOTIFY THE ENGINEER OR SURVEYOR SO THAT THE CONFLICT CAN BE RESOLVED WITH MINIMUM AMOUNT OF DELAY.
4. IF ANY UTILITY LINES, PIPELINES, OR UNDERGROUND UTILITY LINES ARE SHOWN ON THESE DRAWINGS, THEY ARE SHOWN IN AN APPROXIMATE MANNER ONLY, AND SUCH LINES MAY EXIST WHERE NONE ARE SHOWN. IF ANY SUCH EXISTING LINES ARE SHOWN, THE LOCATION IS BASED UPON INFORMATION PROVIDED BY THE OWNER OF SAID UTILITY, AND THE INFORMATION MAY BE INCOMPLETE, OR MAY BE OBSOLETE BY THE TIME CONSTRUCTION COMMENCES. THE ENGINEER HAS UNDERTAKEN NO FIELD VERIFICATION OF THE LOCATION, DEPTH, SIZE, OR TYPE OF EXISTING UTILITY LINES, PIPELINES, OR UNDERGROUND UTILITY LINES. THE CONTRACTOR SHALL INFORM HIMSELF OF THE LOCATION OF ANY UTILITY LINE, PIPELINE, OR UNDERGROUND UTILITY LINE IN OR NEAR THE AREA OF THE WORK IN ADVANCE OF AND DURING EXCAVATION WORK. THE CONTRACTOR IS FULLY RESPONSIBLE FOR ANY AND ALL DAMAGE CAUSED BY HIS FAILURE TO LOCATE, IDENTIFY AND PRESERVE ANY AND ALL EXISTING UTILITIES, PIPELINES, AND UNDERGROUND UTILITY LINES. IN PLANNING AND CONDUCTING EXCAVATION, THE CONTRACTOR SHALL COMPLY WITH STATE STATUTES, MUNICIPAL AND LOCAL ORDINANCES, RULES AND REGULATIONS, IF ANY, PERTAINING TO THE LOCATION OF THESE LINES AND FACILITIES.
5. THE CONTRACTOR SHALL SECURE A "TOPSOIL DISTURBANCE PERMIT" PRIOR TO BEGINNING CONSTRUCTION.
6. THE CONTRACTOR SHALL ASSIST THE ENGINEER/INSPECTOR IN THE RECORDING OF DATA ON ALL UTILITY LINES AND ACCESSORIES AS REQUIRED BY THE OWNERS FOR THE PREPARATION OF "RECORD DRAWINGS". THE CONTRACTOR SHALL NOT COVER UTILITY LINES AND ACCESSORIES UNTIL ALL DATA HAS BEEN RECORDED.
7. REFERENCE MADE TO STANDARD DRAWINGS REFER TO ALBUQUERQUE STANDARD DRAWINGS.
8. ELECTRONIC MARKER DISCS SHALL BE PLACED IN ACCORDANCE WITH SECTION 170 OF THE CITY OF ALBUQUERQUE, STANDARD SPECIFICATIONS, PUBLIC WORKS CONSTRUCTION.
9. WATERLINE CONNECTIONS SHALL BE CONSTRUCTED IN ACCORDANCE WITH CITY STD. DWG. 2301.
10. WATER METERS ARE TO BE INSTALLED AT ALL SERVICES IN ACCORDANCE WITH CITY STD. DWG. 2362 AND 2363.
11. ALL CONSTRUCTION WITHIN CITY RIGHT-OF-WAY OR EASEMENTS MUST BE DONE FROM APPROVED WORK ORDER DOCUMENTS FROM THE CITY OF ALBUQUERQUE AND PREPARED BY BRASHER & LORENZ, INC.
12. AN EXCAVATION/CONSTRUCTION PERMIT WILL BE REQUIRED BEFORE BEGINNING ANY WORK WITHIN CITY RIGHT-OF-WAY. AN APPROVED COPY OF THESE PLANS MUST BE SUBMITTED AT THE TIME OF APPLICATION FOR THIS PERMIT.
13. THE CONTRACTOR SHALL BE RESPONSIBLE FOR DETERMINING, IN ADVANCE OF HIS CONSTRUCTION, IF OVERHEAD UTILITY LINES SUPPORT STRUCTURES, POLES, GUYS, ETC. ARE AN OBSTRUCTION TO CONSTRUCTION OPERATIONS. IF ANY OBSTRUCTION TO CONSTRUCTION OPERATIONS IS EVIDENT, THE CONTRACTOR SHALL BE RESPONSIBLE FOR COORDINATING WITH THE APPROPRIATE UTILITY OWNER TO REMOVE OR SUPPORT THE UTILITY OBSTRUCTION. ANY COST ASSOCIATED WITH THIS EFFORT SHALL BE THE RESPONSIBILITY OF THE CONTRACTOR.
14. CONTRACTOR IS TO SUPPORT AND MAINTAIN THE INTEGRITY OF ALL UNDERGROUND TELEPHONE, ELECTRIC CABLES, AND CABLE TELEVISION UTILITIES AT NO ADDITIONAL COST TO THE OWNER. CABLE IS TO BE SUPPORTED EVERY 15' (MINIMUM). CONTRACTOR SHALL COORDINATE WITH AND MAKE NECESSARY PAYMENT (IF ANY) TO UTILITY OWNER FOR DE-ENERGIZATION OF CABLES OR SUPPORT OF CABLES BY THE UTILITY OWNER.
15. THREE (3) WORKING DAYS PRIOR TO BEGINNING CONSTRUCTION THE CONTRACTOR SHALL SUBMIT TO THE CONSTRUCTION COORDINATION DIVISION A DETAILED CONSTRUCTION SCHEDULE. TWO (2) WORKING DAYS PRIOR TO CONSTRUCTION THE CONTRACTOR SHALL OBTAIN A BARRICADING PERMIT FROM THE CONSTRUCTION COORDINATION DIVISION. THE CONTRACTOR SHALL NOTIFY THE BARRICADE ENGINEER (768-2551) PRIOR TO OCCUPYING AN INTERSECTION. SEE SECTION 19 OF THE SPECIFICATIONS.
16. ALL STREET STRIPING ALTERED OR DESTROYED SHALL BE REPLACED IN KIND BY THE CONTRACTOR TO LOCATION, AND IN KIND AS EXISTING OR AS INDICATED ON THE PLANSET.
17. ANY WORK OCCURRING IN AN ARTERIAL ROADWAY REQUIRES TWENTY-FOUR HOUR CONSTRUCTION.

1 2 3 4 5 6 7 8 9 10 11 12 13 14 15
2 6 - 5 3 6 9 . 9 0 0 1 9 7

BRASHER & LORENZ, INC.
Consulting Engineers
4425 Juan Tabo Blvd. NE Suite 202
Albuquerque, New Mexico 87111
Ph: 505-296-0422 Fax: 505-296-0466

REV.	SHEETS	CITY ENGINEER	DATE	USER DEPARTMENT	DATE	USER DEPARTMENT	DATE

ENGINEERS STAMP & SIGNATURE

3-12-96

APPROVALS	ENGINEER	DATE
DRC Chairman	Billy J. Hopkins	5-20-96
Transportation	[illegible]	4-29-96
Water/Wastewater	R.W. Lorenz	3-22-96
Hydrology	John Cleveland	4-29-96
Parks		
Constr. Mngmt.		

APPROVED FOR CONSTRUCTION

City Engineer 6/21/96 Date

CITY PROJECT NO. 5369.90

SHEET 1 OF 8

APPROVAL OF AS BUILT DRAWINGS
CHIEF CONSTRUCTION ENGINEER
DATE 1-23-97

SCANNED BY BY LASON

DRB No. 95-260

© COPYRIGHT

PLAT OF

LOTS 1 THRU 26
WESTERN ESTATES SUBDIVISION

ALBUQUERQUE, BERNALILLO COUNTY, NEW MEXICO
NOVEMBER 1995

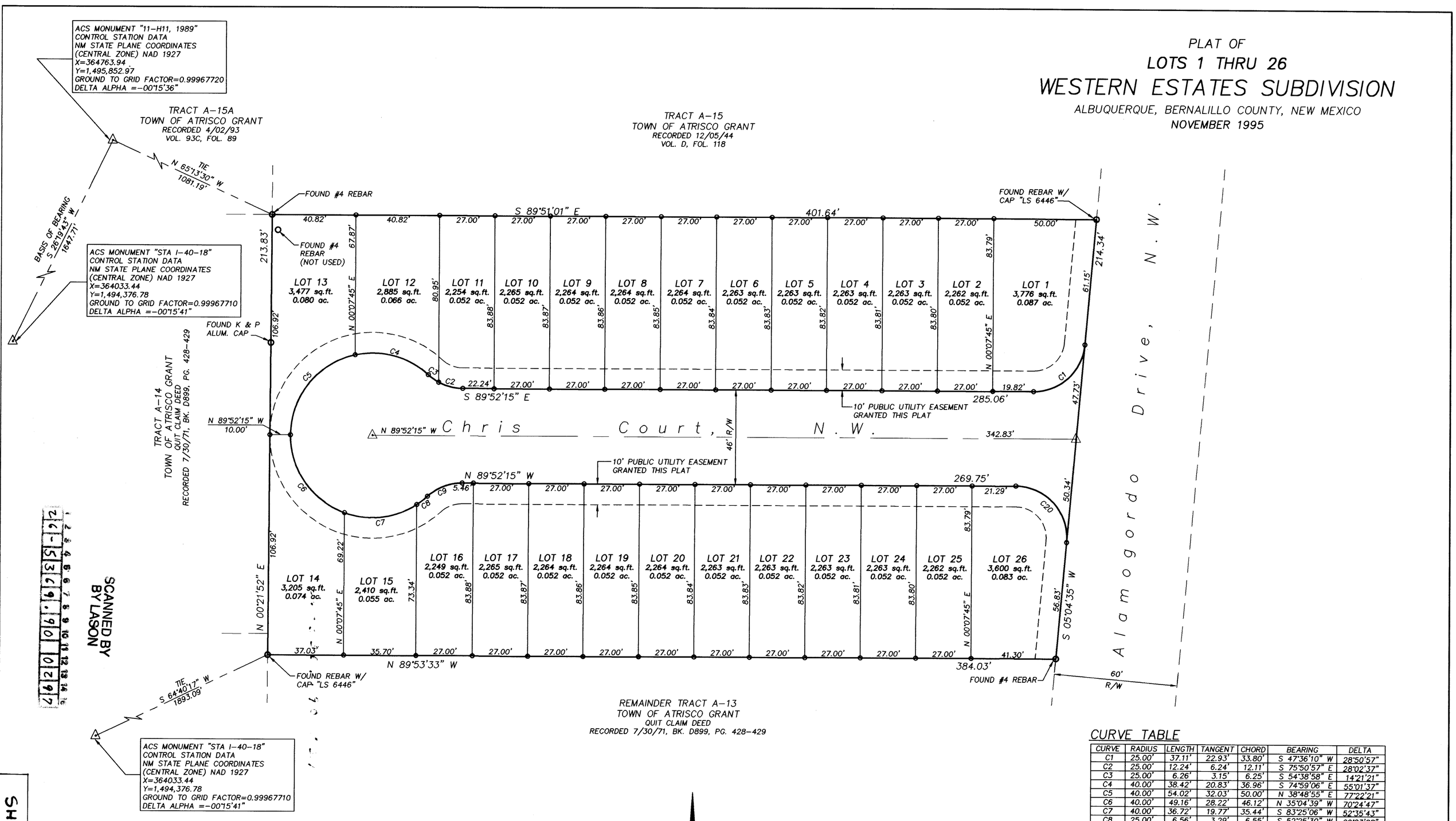

SCANNED BY BY LASON

CURVE TABLE

CURVE	RADIUS	LENGTH	TANGENT	CHORD	BEARING	DELTA
C1	25.00'	37.11'	22.93'	33.80'	S 47°36'10" W	28°50'57"
C2	25.00'	12.24'	6.24'	12.11'	S 75°50'57" E	28°02'37"
C3	25.00'	6.26'	3.15'	6.25'	S 54°38'58" E	14°21'21"
C4	40.00'	38.42'	20.83'	36.96'	S 74°59'06" E	55°01'37"
C5	40.00'	54.02'	32.03'	50.00'	N 38°48'55" E	77°22'21"
C6	40.00'	49.16'	28.22'	46.12'	N 35°04'39" W	70°24'47"
C7	40.00'	36.72'	19.77'	35.44'	S 83°25'06" W	52°35'43"
C8	25.00'	6.56'	3.29'	6.55'	S 52°25'30" W	09°23'28"
C9	25.00'	18.50'	9.70'	18.08'	S 68°55'45" W	42°23'58"
C20	25.00'	41.43'	27.26'	36.85'	S 42°23'50" E	94°56'51"

LEGEND

- ◎ POINT FOUND AND USED AS SHOWN
- ○ POINT SET BY THIS SURVEY
- △ CENTERLINE (IN LIEU OF R/W MONUMENTATION) TO BE INSTALLED AT ALL CENTERLINE PC'S, PT'S, ANGLE POINTS AND STREET INTERSECTIONS PRIOR TO ACCEPTANCE OF SUBDIVISION STREET IMPROVEMENTS AND WILL CONSIST OF A STANDARD FOUR-INCH (4") ALUMINUM ALLOY CAP STAMPED "CITY OF ALBUQUERQUE", "CENTERLINE MONUMENTATION", "SURVEY MARKER", "DO NOT DISTURB", "PLS# 11993"

GRAPHIC SCALE

30 0 15 30 60 120

(IN FEET)
1 inch = 30 ft.

PRECISION SURVEYS, INC.

2929 COORS BLVD NW, SUITE 105
ALBUQUERQUE, NEW MEXICO 87120
PHONE 505 839 0599
FAX 505 839 4153

DRB CASE NO. 95- 260

ENGINEER'S CERTIFICATION

I, the undersigned, being a Professional Engineer in the State of New Mexico, do hereby certify that this drawing was prepared by me or under my supervision, and that the as-built information shown hereon is based on actual field measurements and inspections performed by Brasher & Lorenz, Inc. I further certify that the as-built condition of the site is in substantial compliance with the approved Grading and Drainage Plan prepared by Brasher & Lorenz, Inc., dated March 12, 1996.

11-13-96

Dennis A. Lorenz, NMPE 9647 Date

DENNIS A. LORENZ — NEW MEXICO — 9647 — REGISTERED PROFESSIONAL ENGINEER

N

0 10 20 40

1 inch = 20 ft.

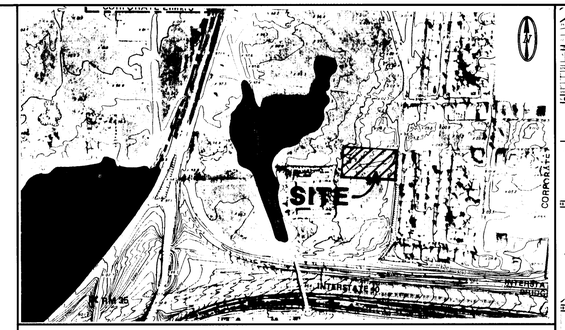

ALTHOUGH THE TOPOGRAPHY SHOWN HEREON DOES NOT REFLECT RECENT DEVELOPMENT THE DRAINAGE BASINS REMAIN ESSENTIALLY UNCHANGED

FLOODWAY & OFFSITE DRAINAGE MAP 1"=500'

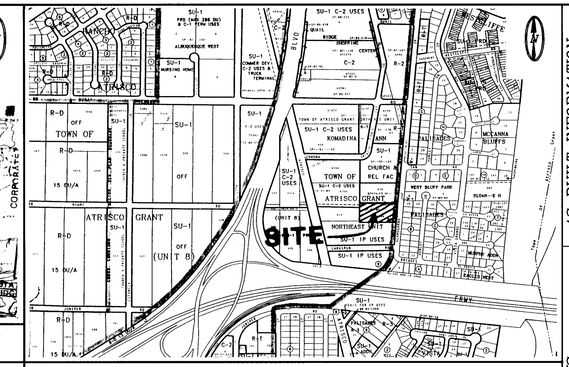

H-11 LOCATION MAP 1"=800'

LEGEND

—6001—	EXISTING CONTOUR ELEVATION
02.5 ×	EXISTING SPOT ELEVATION
—01—	PROPOSED CONTOUR ELEVATION
—· · · —	PROPERTY LINE
01.5 ✦	PROPOSED SPOT ELEVATION
←	DIRECTION OF FLOW
←	DRAINAGE SWALE
— — —	DRAINAGE BASIN DIVIDE
▬	RETAINING WALL
▬	STANDARD CURB
▬	MOUNTABLE CURB
▬	GARDEN WALL
01.5 / 01.1	AS BUILT ELEV.

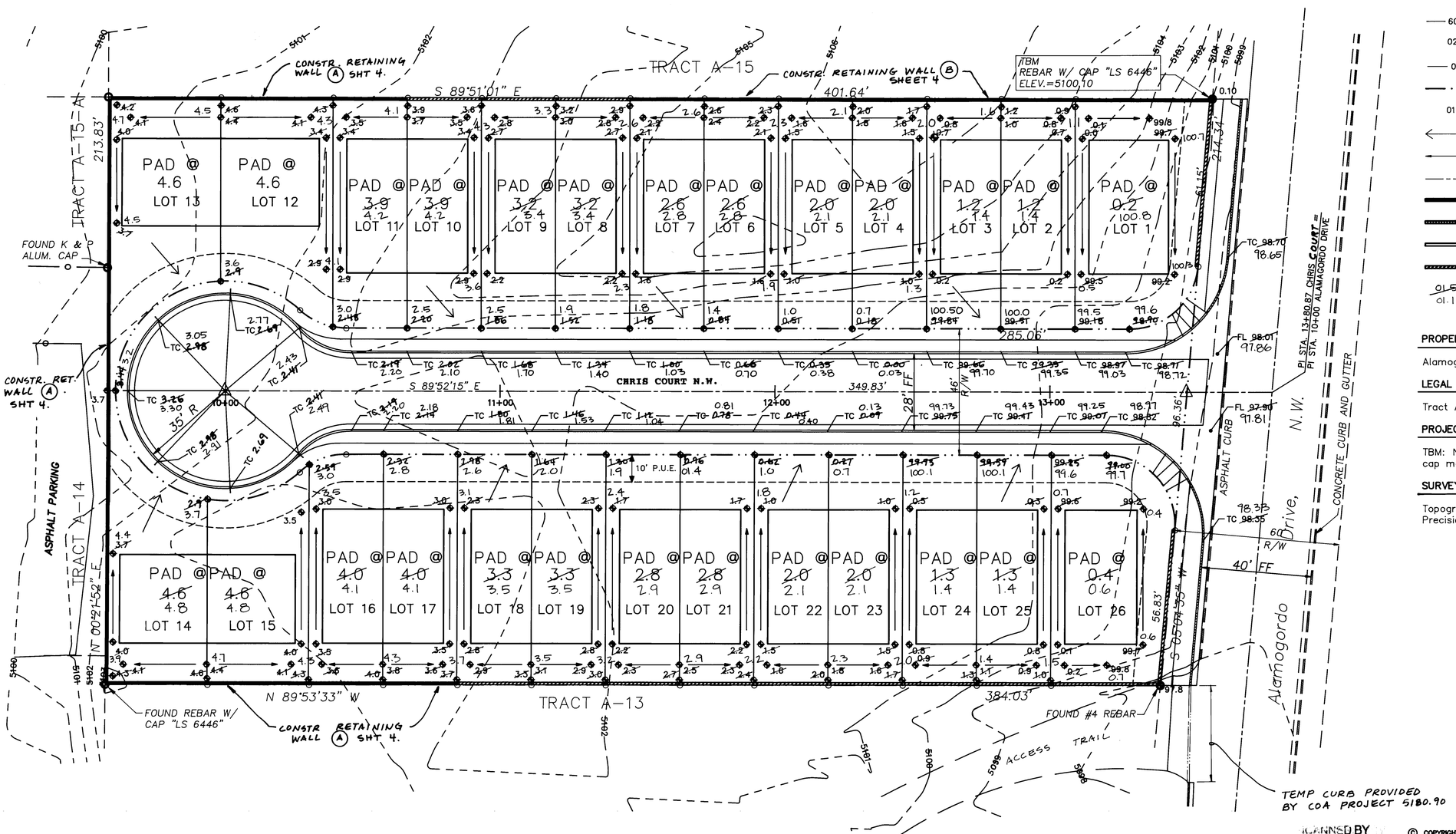

PROPERTY ADDRESS

Alamogordo Drive, N.W.

LEGAL DESCRIPTION

Tract A-14-A, Town of Atrisco Grant

PROJECT BENCHMARK

TBM: NE property corner, a 1/2" rebar with cap marked LS 6446. Elevation 5100.10 feet

SURVEY

Topographic and Field Measurement by Precision Surveys, Dated August 1995

26-5369.90 0397

BRASHER & LORENZ, INC.
4425 JUAN TABO BLVD. NE., SUITE 202
ABLBUQUERQUE, NM 87111
PH (505)296-0422 FAX (505)296-0466

CITY OF ALBUQUERQUE
PUBLIC WORKS DEPARTMENT
ENGINEERING GROUP

TITLE: WESTERN ESTATES SUBDIVISION
GRADING, DRAINAGE AND EROSION CONTROL PLAN

APPROVALS	ENGINEER	DATE	APPROVALS	ENGINEER	DATE
D.R.C. CHAIR			WATER		
TRANS. DEV.			WASTEWATER		
HYDROLOGY					

PROJECT NO.	MAP NO.	SHEET	OF
5369.90	H-11	3	8

AS BUILT INFORMATION

CONTRACTOR / STAKED BY / INSPECTOR'S / ENGINEER BY / FIELD / VERIFICATION BY / REVIEWED / CORRECTED BY — DATE

MICRO-FILM INFORMATION

RECORDED BY — DATE — NO.

BENCH MARKS

LOCATED AT THE NORTHEAST CORNER OF THE PROPERTY
CORNER A REBAR WITH CAP MARKED "LS 6446"
THE ELEVATION IS 5100.10 FEET

SURVEY INFORMATION

FIELD NOTES

NO.	BY	DATE

ENGINEER'S SEAL

DENNIS A. LORENZ — NEW MEXICO — 9647 — REGISTERED PROFESSIONAL ENGINEER — 11-29-95

9-18-95
03-12-96

REVISIONS

NO.	DATE	REMARKS	BY

DESIGN

		DATE
DESIGNED BY	JSM	9-10-95
DRAWN BY	STAFF	9-10-95
CHECKED BY	PB	9-10-95

SCANNED BY [illegible]

© COPYRIGHT

For Information Only

50546-D

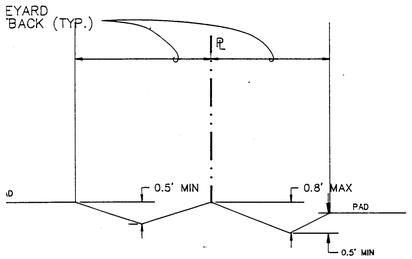

SIDEYARD SWALE W/O GARDEN WALL (A/4)
NTS

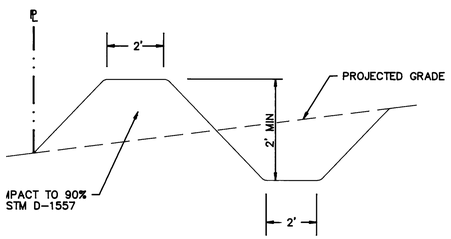

RY EROSION CONTROL BERM DETAIL (B/4)
NTS

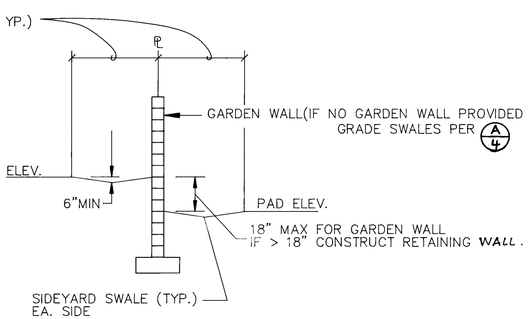

ARD SWALE WITH GARDEN WALL (C/4)
NTS

GRADING AND DRAINAGE PLAN

PURPOSE AND SCOPE

Pursuant to the established Drainage Ordinance for the City of Albuquerque and the Development Process Manual, this Grading and Drainage Plan defines the drainage management criteria that will control developed runoff from the project site. The property is to be developed as a 26 lot residential subdivision, with associated paving, landscaping, utility, grading, and drainage improvements.

EXISTING CONDITIONS

The project site is approximately 1.9 acres in size, and is located on Alamagordo Drive NW, north of Larkspur Road NW. The site is described as Tract A-14-A , Town of Atrisco Grant. The site is bounded by Alamagordo Drive on the east, Tract A-13 on the south, Tract A-14 and Tract A-15-A on the west, and Tract A-15 on the north. Presently the site is undeveloped. Site topography slopes from east to west at approximately 3%. The site is sparsely covered with native vegetation. Alamagordo Drive is fully improved with curb and gutter, sidewalk and asphalt pavement. No off-site flows impact the site.

On-site, flows are divided by a ridge on the north side of the site. Approximately half of the site drains, as sheet flow, west into Tracts A-14 and A-15-A. The remaining half of the site drains, as sheet flow, east into Alamogordo Drive, then 350' south in Alamagordo Drive and outfalls into the West Bluff System . As shown by the attached Floodway Panel, this site does not lie within a flood hazard zone.

DEVELOPED CONDITIONS

As shown by the Plan, the project consists of the development of the property into a 26 lot residential subdivision. The Plan shows the contours and elevations required to properly grade and construct the required improvements. The direction of drainage flows are given by flow arrows and the project hydrology is tabulated for both existing and developed conditions.

All drainage flows will be managed on-site and discharge to Alamogordo NW, to the east, where it will convey runoff south 350' to the West Bluff System.

EROSION CONTROL

Temporary erosion control will be required along the project boundaries during construction to prevent the discharge of sediment into the public street system and adjoining private property. The contractor should construct a ditch dike system (see Detail "B") along the property lines to effectively retain all runoff generated by the project. Care should be taken to provide ponding areas at the site perimeter, away from the buildings.

CALCULATIONS:

The calculations shown hereon define the 100 year/6 hour design storm falling within the project area under existing and developed conditions. The Hydrology is calculated using the AHYMO computer program per "Section 22.2, Part C, DPM, Vol 2" Dated January 1993.

			HYDROLOGY - HYMO					
Precipitation Zone 1						P360 = 2.20 inches		
BASIN	AREA	Aa	Ab	Ac	Ad	E	Q100	VOL100
	acres	acres	acres	acres	acres	inches	cfs	af
EXISTING CONDITION:								
SITE	1.93	1.93				0.44	2.5	0.0708
A	12.60	0.00	3.15	3.15	6.30	1.40	43.0	1.4700
B	5.90	0.00	1.48	1.48	2.94	1.40	20.1	0.6883
DEVELOPED CONDITION:								
SITE	1.93	0.00	0.29	0.24	1.40	1.65	7.4	0.2654
A	12.60	0.00	3.15	3.15	6.30	1.40	43.0	1.4700
B	5.90	0.00	1.48	1.48	2.94	1.40	20.1	0.6883

DRAINAGE PLAN NOTES

1. BLI recommends that the Owner obtain a Geotechnical Evaluation of the on-site soils prior to foundation /structural design.
2. This Plan recommends positive drainage to prohibit ponding of runoff adjacent structures which may cause structural settlement. Future alteration of grades adjacent to the proposed structures is not recommended.
3. Irrigation within 10 feet of any proposed structure is not recommended. Introduction of irrigation water into subsurface soils adjacent to the structure could cause settlement.
4. This Plan is prepared to establish on-site drainage and grading criteria only. BLI assumes no responsibility for subsurface analysis, foundation/structural design, or utility design.
5. Local codes require all footings to be placed in natural undisturbed soil. If the Contractor plans to place footings on engineered fill, a certification by a registered Professional Engineer will be required. If the contractor wishes BLI to prepare the Certification, we must be notified **PRIOR** to placement of the fill.
6. BLI recommends that the Owner obtain the services of a Geotechnical Engineer to test and inspect all earthwork aspects of the project.
7. The property boundary shown on this Plan is given for information only to describe the project limits. Property boundary information shown hereon does not constitute a boundary survey. A boundary survey performed by a licensed New Mexico Registered Professional Surveyor is recommended prior to construction.

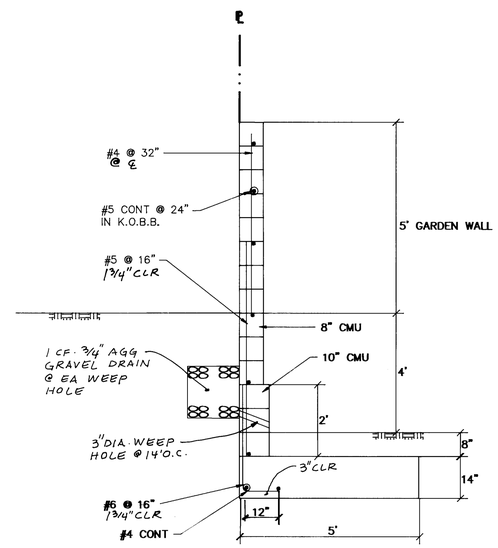

RETAINING WALL (A/4)

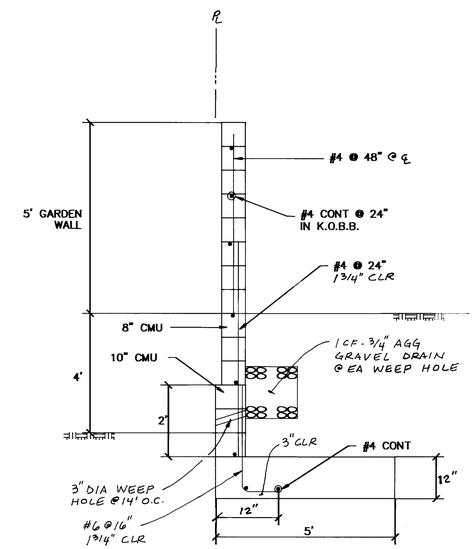

RETAINING WALL (B/4)

RETAINING WALL NOTES:

1. All cells shall be completely filled with concrete
2. All walls are designed based on special inspection per UBC and assumes garden wall heights are not to exceed 5 feet.
3. Contractor shall submit to Owner results of masonry test prisms built and tested per UBC STD 24-26, UBC SEC 2405.
4. Footing subgrade and base shall be compacted to 95% modified proctor per ASTM D-1557.
5. 1/2" felt expansion joints shall be installed at 30 foot on center and at section changes.
6. All masonry shall be laid in running bond only.
7. All masonry surfaces to be backfilled shall be coated with emulsified asphalt.
8. Walls are designed assuming the following:

f'c = 4000 psi: maximum aggregate size = 3/4"
fy = 60,000 psi (ASTM A-615 GR 60)
fm = 1500 psi
Wind loading on garden wall = 35 psf
Unit weight of backfill = 120 pcf
Concrete/soil coeff of friction = 0.35
Allowable soil bearing pressure = 1500 psf
Acting pressure = 44 psf/ft
Slope active pressure = 44 psf/ft
Passive pressure = 400 psf/ft

26-5369.910 0497

BRASHER & LORENZ, INC.
4425 JUAN TABO BLVD. NE., SUITE 202
ABLBUQUERQUE, NM 87111
PH (505)296-0422 FAX (505)296-0466

CITY OF ALBUQUERQUE
PUBLIC WORKS DEPARTMENT
ENGINEERING GROUP

TITLE: WESTERN ESTATES SUBDIVISION
GRADING, DRAINAGE AND EROSION CONTROL PLAN

APPROVALS	ENGINEER	DATE	APPROVALS	ENGINEER	DATE
D.R.C. CHAIR			WATER		
TRANS. DEV.			WASTEWATER		
HYDROLOGY					

PROJECT NO.	MAP NO.	SHEET	OF
5369.90	H-11	4	8

AS BUILT INFORMATION
CONTRACTOR / WORK BY / DATE
DEDICATION / ACCEPTANCE BY / DATE
VERIFICATION BY / DATE
COMPUTED BY / DATE
MICRO-FILM INFORMATION
RECORDED BY / DATE
NO.

BENCH MARKS
LOCATED AT THE NORTHEAST CORNER OF THE PROPERTY
CORNER A REBAR WITH CAP MARKED "LS 6446"
THE ELEVATION IS 5100.10 FEET

SURVEY INFORMATION
FIELD NOTES

NO.	BY	DATE

ENGINEER'S SEAL
9-18-95
11-29-95
03-12-96

NO.	DATE	REMARKS	BY

REVISIONS

		DATE
DESIGN		
DESIGNED BY	JSM	9-10-95
DRAWN BY	STAFF	9-10-95
CHECKED BY	PB	9-10-95

SCANNED BY BY LASON
© COPYRIGHT

For Information Only

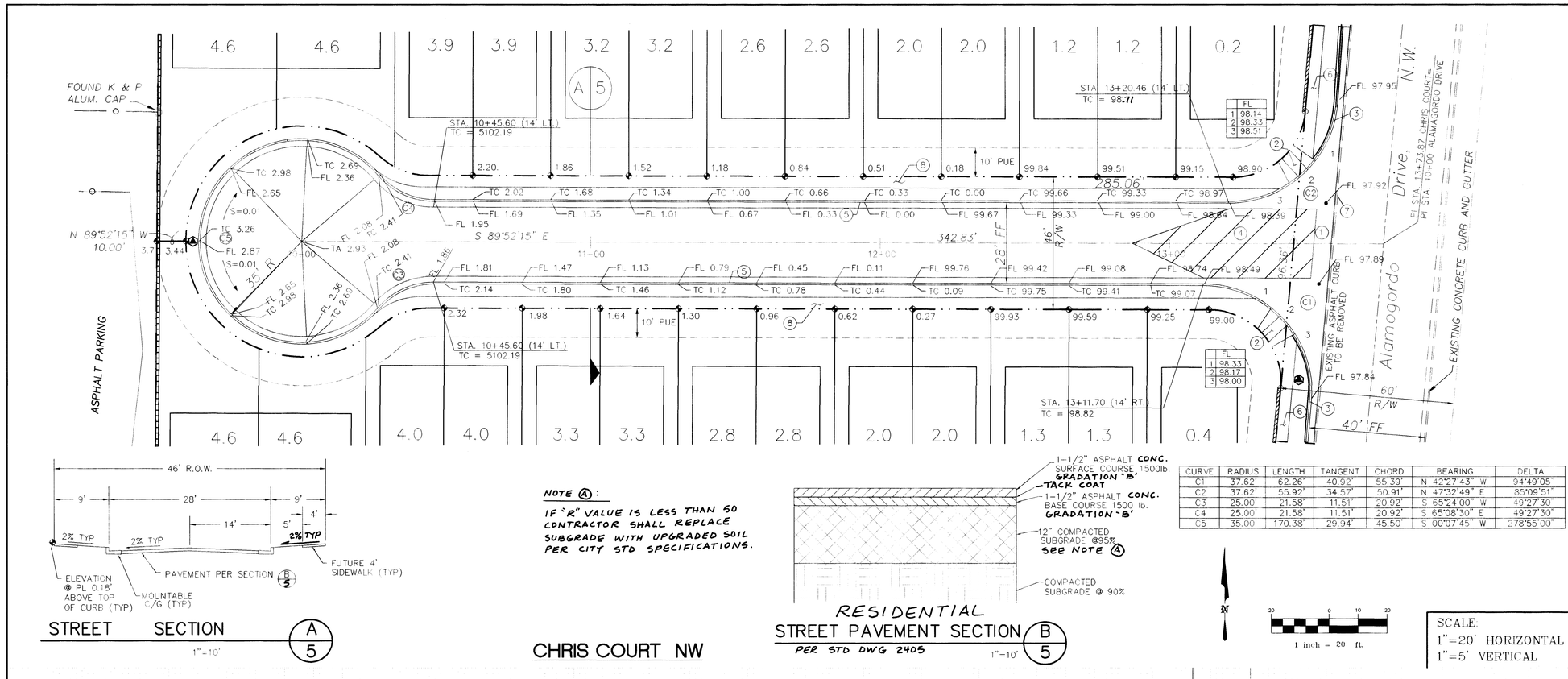

STREET SECTION A/5

1"=10'

NOTE (A):

IF 'R' VALUE IS LESS THAN 50 CONTRACTOR SHALL REPLACE SUBGRADE WITH UPGRADED SOIL PER CITY STD SPECIFICATIONS.

CHRIS COURT NW

RESIDENTIAL STREET PAVEMENT SECTION B/5

PER STD DWG 2405

1"=10'

CURVE	RADIUS	LENGTH	TANGENT	CHORD	BEARING	DELTA
C1	37.62'	62.26'	40.92'	55.39'	N 42°27'43" W	94°49'05"
C2	37.62'	55.92'	34.57'	50.91'	N 47°32'49" E	85°09'51"
C3	25.00'	21.58'	11.51'	20.92'	S 65°24'00" W	49°27'30"
C4	25.00'	21.58'	11.51'	20.92'	S 65°08'30" E	49°27'30"
C5	35.00'	170.38'	29.94'	45.50'	S 00°07'45" W	278°55'00"

N

20 0 10 20

1 inch = 20 ft.

SCALE:
1"=20' HORIZONTAL
1"=5' VERTICAL

LEGEND

ITEM	EXISTING	PROPOSED
WATERLINE	6" W	6" W
SANITARY SEWER	8" SAS	8" SAS
STORM SEWER	36" SD	24" SD
FIRE HYDRANT		
VALVE		
WATER SERVICE (SINGLE)		
WATER SERVICE (DOUBLE)		
MANHOLE		
CURB		
DROP INLET		
OVERHEAD ELEC	OHE	
UNDERGROUND ELEC, GAS, TEL, TV	UGT	
FLOWLINE ELEV	FL 0.14	FL 0.14
TOP OF CURB ELEV.	TC 99.3	TC 99.31
SPOT ELEV.	× 16.7	16.7
SEWER SERVICE		
RIGHT OF WAY		
POWER POLE (GUYED)	PP	
CHAIN LINK FENCE		
CENTERLINE		
GARDEN WALL		
TOP OF ASPHALT ELEV.	TA 16.2	TA 16.2
CROWN TRANSITION (50' LENGTH - TYPICAL)		
PROPOSED STREET LIGHT		

NOTE:

1. ALL STATIONING IS BASED ON CENTERLINE OF RIGHT-OF-WAY UNLESS OTHERWISE NOTED.

PAVING BUILD NOTES

1. BUILD CONCRETE VALLEY GUTTER PER COA DRAWING # 2420.
2. BUILD WHEELCHAIR RAMP CASE II PER COA DRAWING # 2441. TRANSITION FROM MOUNTABLE TO STANDARD CURB & GUTTER THROUGH WCR PER COA DWG 2418.
3. BUILD STANDARD CURB & GUTTER PER COA DRAWING # 2415.
4. BUILD 50' CROWN TRANSITION PER COA DWG 2401.
5. BUILD MOUNTABLE CURB & GUTTER PER COA DRAWING # 2415.
6. BUILD 4' SIDEWALK PER COA DRAWING # 2430.
7. SAWCUT EXISTING ASPHALT CURB FROM SOUTHEAST PROPERTY CORNER, TO NORTHEAST PROPERTY CORNER, (LENGTH = 214 LIN. FT.). REMOVE AND DISPOSE PER COA DWG 2415. MATCH EXIST. CURB WITH PROPOSED STANDARD C&G.
8. FUTURE 4' SIDEWALK BY OTHERS.

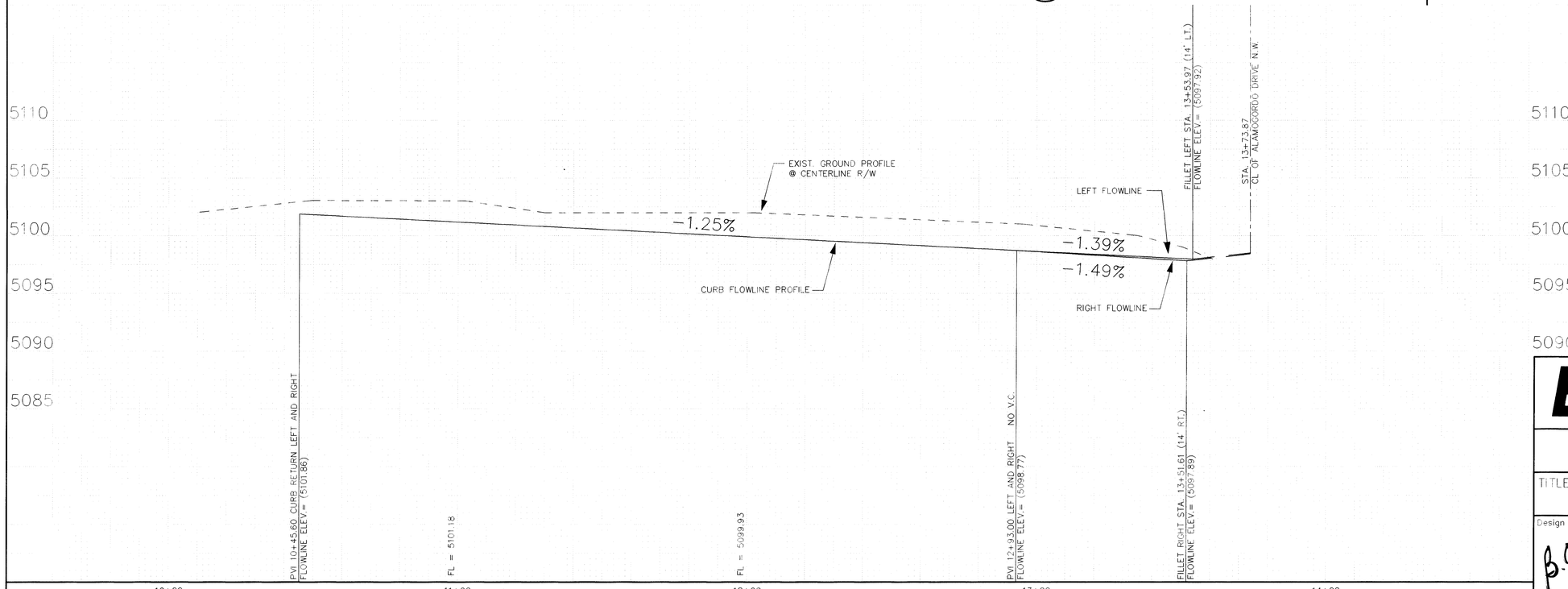

5054PVG 1=20 3/11/96

SCANNED BY BY LASON

AS BUILT INFORMATION
CONTRACTOR: C. Sep DATE 12-6-92
STAKED BY: Sidy DATE 12/6/92
INSPECTOR'S ACCEPTANCE BY: Ray Garcia DATE 12/7/92
FIELD VERIFICATION BY: DATE
DRAWINGS CORRECTED BY: COA DATE 1/97
MICRO-FILM INFORMATION
RECORDED BY DATE
NO.

BENCH MARKS
LOCATED AT THE NORTHEAST CORNER OF THE PROPERTY.
CORNER A REBAR WITH CAP MARKED "LS 6446"
THE ELEVATION IS 5100.10 FEET

SURVEY INFORMATION
FIELD NOTES
NO. BY DATE

ENGINEER'S SEAL
3-12-96

NO.	DATE	REMARKS	BY
		REVISIONS	

DESIGN
DESIGNED BY DL DATE 3.96
DRAWN BY STAFF DATE 3.96
CHECKED BY DL DATE 3.96

1 2 3 4 5 6 7 8 9 10 11 12 13 14 15 16
2 6 - 5 3 6 9 . 9 0 0 5 9 7

BRASHER & LORENZ, INC.
Consulting Engineers
4425 Juan Tabo Blvd. NE Suite 202
Albuquerque, New Mexico 87111
Ph: 505-296-0422 Fax: 505-296-0466

CITY OF ALBUQUERQUE
PUBLIC WORKS DEPARTMENT
ENGINEERING DEVELOPMENT GROUP

TITLE: WESTERN ESTATES SUBDIVISION
STREET PAVING PLAN & PROFILE
CHRIS COURT NW

Design Review Committee: B.J.B. 5/30/96
City Engineer Approval
Last Design Update | Mo./Day/Yr. | Mo./Day/Yr.

City Project No. 5369.90 | Zone Map No. H-11 | Sheet 5 Of 8

	TC	FL
1	98.66	98.33
2		98.17
3	98.67	98.00

	TC	FL
1	98.81	98.14
2		98.33
3	98.84	98.51

CURVE	RADIUS	LENGTH	TANGENT	DELTA
C1	37.62'	62.26'	40.92'	94°49'05"
C2	37.62'	55.92'	34.57'	85°09'51"

20 0 10 20

1 inch = 20 ft.

SCALE:
1"=20' HORIZONTAL
1"=5' VERTICAL

ALAMOGORDO DRIVE N.W.

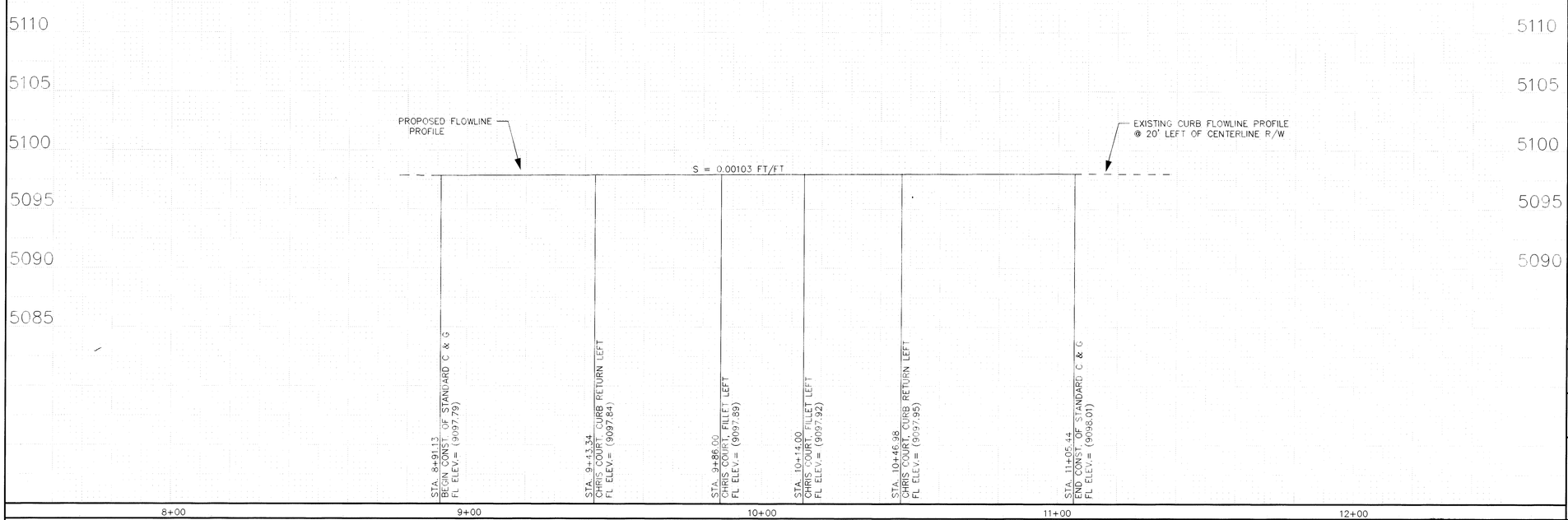

5054CG 1=20 3/11/96

LEGEND

ITEM	EXISTING	PROPOSED
WATERLINE	6" W	6" W
SANITARY SEWER	8" SAS	8" SAS
STORM SEWER	36" SD	24" SD
FIRE HYDRANT		
VALVE		
WATER SERVICE (SINGLE)		
WATER SERVICE (DOUBLE)		
MANHOLE		
CURB		
DROP INLET		
OVERHEAD ELEC	OHE	
UNDERGROUND ELEC, GAS, TEL, TV	UGT	
FLOWLINE ELEV.	FL 0.14	FL 0.14
TOP OF CURB ELEV.	TC 99.3	TC 99.31
SPOT ELEV.	× 16.7	16.7
SEWER SERVICE		
RIGHT OF WAY		
POWER POLE (GUYED)	PP	
CHAIN LINK FENCE		
CENTERLINE		
GARDEN WALL		
TOP OF ASPHALT ELEV.	TA 16.2	TA 16.2
CROWN TRANSITION (50' LENGTH – TYPICAL)		
PROPOSED STREET LIGHT		

NOTE:

1. ALL STATIONING IS BASED ON CENTERLINE OF RIGHT-OF-WAY UNLESS OTHERWISE NOTED.

PAVING BUILD NOTES

1. BUILD CONCRETE VALLEY GUTTER PER COA DRAWING # 2420.
2. BUILD WHEELCHAIR RAMP CASE II PER COA DRAWING # 2441. TRANSITION FROM MOUNTABLE TO STANDARD CURB & GUTTER THROUGH WCR PER COA DWG 2418.
3. BUILD STANDARD CURB & GUTTER PER COA DRAWING # 2415.
4. BUILD 50' CROWN TRANSITION PER COA DWG 2401.
5. BUILD MOUNTABLE CURB & GUTTER PER COA DRAWING # 2415.
6. BUILD 4' SIDEWALK PER COA DRAWING # 2430.
7. SAWCUT EXISTING ASPHALT CURB FROM SOUTHEAST PROPERTY CORNER, TO NORTHEAST PROPERTY CORNER, (LENGTH = 214 LIN. FT.). REMOVE AND DISPOSE PER COA DWG 2415. MATCH EXIST. CURB WITH PROPOSED STANDARD C&G.
8. FUTURE 4' SIDEWALK BY OTHERS.

1 2 3 4 5 6 7 8 9 10 11 12 13 14 15
26-5369-90 0697

AS BUILT INFORMATION
CONTRACTOR CCM
WORK STAKED BY C.O.A. DATE 1/96
INSPECTOR'S ALLOWANCES BY Ray Baca DATE 2/96
FIELD VERIFICATION BY DATE
DRAWINGS CORRECTED BY C.O.A. DATE 1/97
MICRO-FILM INFORMATION
RECORDED BY DATE
NO.

BENCH MARKS
LOCATED AT THE NORTHEAST CORNER OF THE PROPERTY.
CORNER A REBAR WITH CAP MARKED "LS 6446"
THE ELEVATION IS 5100.10 FEET.

SURVEY INFORMATION
FIELD NOTES
NO. BY DATE

ENGINEER'S SEAL
3-12-96

NO	DATE	REMARKS	BY
		REVISIONS	

DESIGNED BY DL DATE 3/96
DRAWN BY STAFF DATE 3/96
CHECKED BY DL DATE 3/96

BRASHER & LORENZ, INC.
Consulting Engineers
4425 Juan Tabo Blvd. NE Suite 202
Albuquerque, New Mexico 87111
Ph: 505-296-0422 Fax: 505-296-0466

CITY OF ALBUQUERQUE
PUBLIC WORKS DEPARTMENT
ENGINEERING DEVELOPMENT GROUP

TITLE: WESTERN ESTATES SUBDIVISION
CURB & GUTTER PLAN & PROFILE
ALAMOGORDO DRIVE NW

Design Review Committee: B.J.B. 5/30/96
City Engineer Approval
Last Design Update | Mo./Day/Yr. | Mo./Day/Yr.

City Project No. 5369.90 | Zone Map No. H-11 | Sheet 6 Of 8

SCANNED BY BY LASON

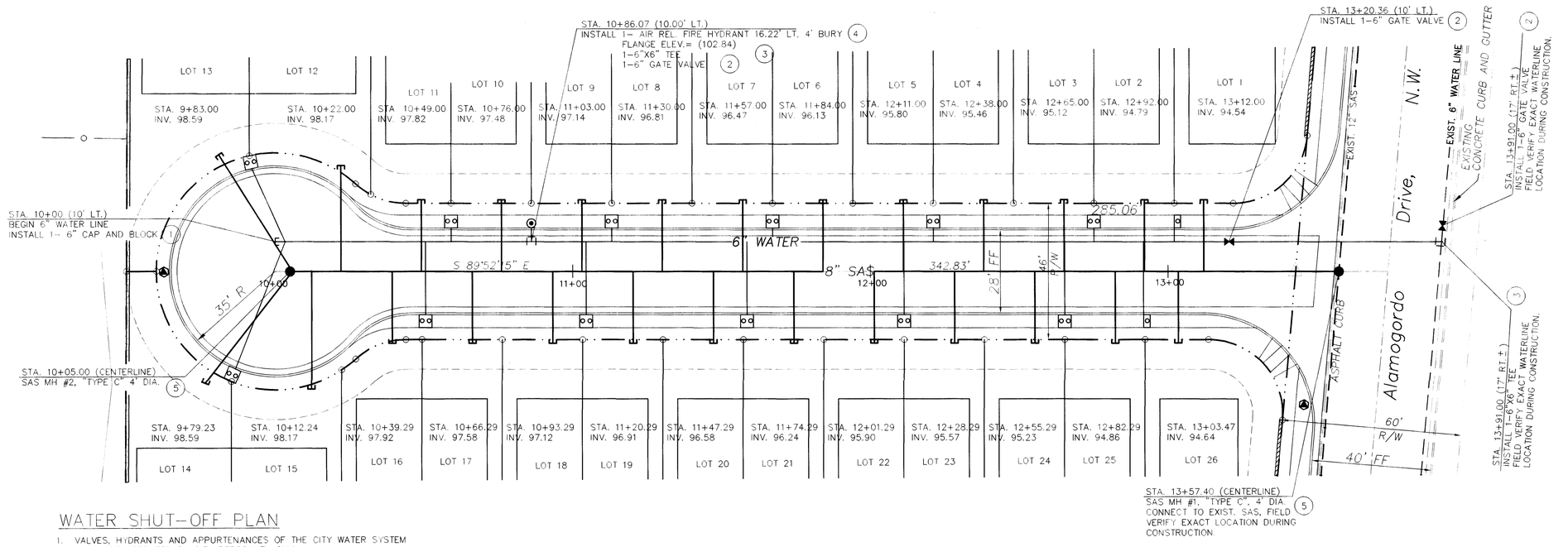

WATER SHUT-OFF PLAN

1. VALVES, HYDRANTS AND APPURTENANCES OF THE CITY WATER SYSTEM SHALL BE OPERATED BY CITY PERSONNEL ONLY.
2. THE CONTRACTOR SHALL PROVIDE THE CITY 48 HOURS ADVANCE NOTICE OF NEED FOR SYSTEM SHUTDOWN.
3. SYSTEM SHUTDOWN SHALL BE ACCOMPLISHED BY CLOSING VALVES 512, 962 AND 963.
4. ANTICIPATED SHUTDOWN DURATION IS 8 HOURS.

CHRIS COURT NW

SCALE:
1"=20' HORIZONTAL
1"=5' VERTICAL

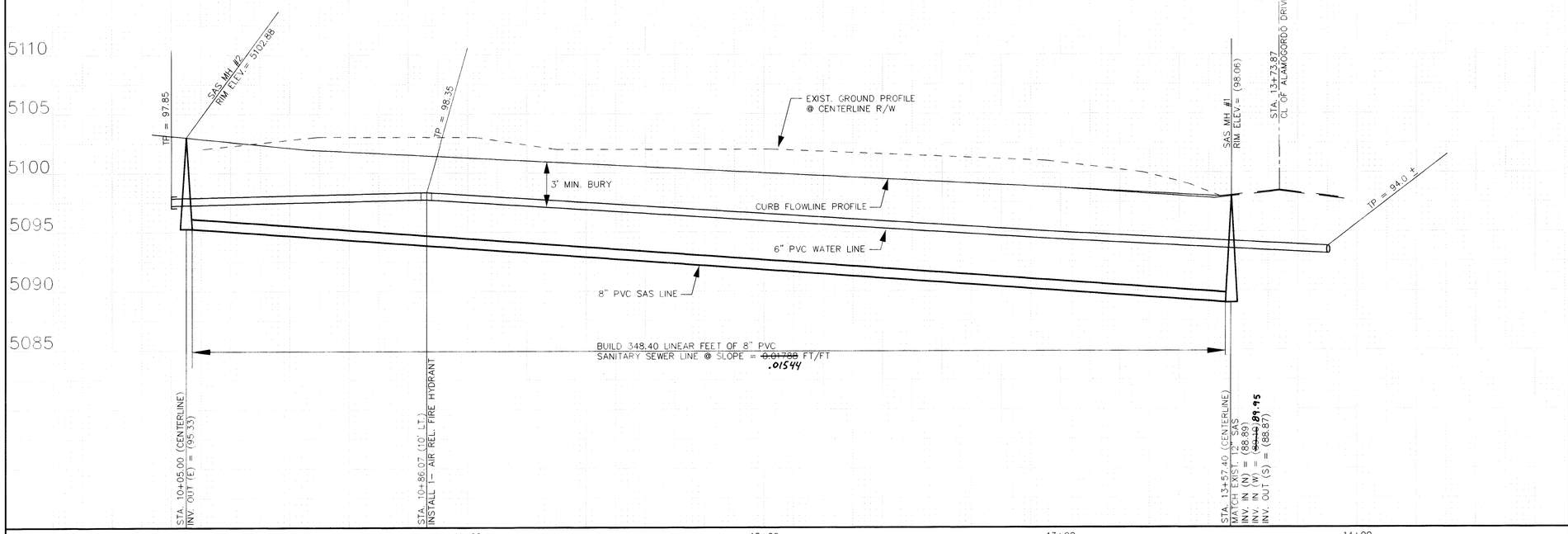

LEGEND

ITEM	EXISTING	PROPOSED
WATERLINE	6" W	6" W
SANITARY SEWER	8" SAS	8" SAS
STORM SEWER	36" SD	24" SD
FIRE HYDRANT		
VALVE		
WATER SERVICE (SINGLE)		
WATER SERVICE (DOUBLE)		
MANHOLE		
CURB		
DROP INLET		
OVERHEAD ELEC	OHE	
UNDERGROUND ELEC. GAS.TEL.TV	UGT	
FLOWLINE ELEV.	FL 0.14	FL 0.14
TOP OF CURB ELEV.	TC 99.3	TC 99.31
SPOT ELEV.	×16.7	16.7
SEWER SERVICE		
RIGHT OF WAY		
POWER POLE (GUYED)	PP	
CHAIN LINK FENCE		
CENTERLINE		
RETAINING WALL		
TOP OF ASPHALT ELEV.	TA 16.2	TA 16.2
CROWN TRANSITION (50' LENGTH - TYPICAL)		
PROPOSED STREET LIGHT		

NOTE:

1. ALL STATIONING IS BASED ON CENTERLINE OF RIGHT-OF-WAY UNLESS OTHERWISE NOTED.

UTILITY BUILD NOTES

(1) BUILD 6" CAP & CONCRETE BLOCKING PER COA DRAWING # 2320.

(2) BUILD 6" GATE VALVE & BOX PER COA DRAWING #'S 2325, 2328 & 2333.

(3) BUILD 6"X6" TEE PER COA DRAWING # 2301.

(4) BUILD 6" AIR REL. FIRE HYDRANT PER COA DRAWING # 2340.

(5) BUILD SAS MANHOLE, "TYPE C", 4' DIA. PER COA DRAWING # 2101.

26-5369.90 07997

AS BUILT INFORMATION
WORK STAKED BY C.G.M. DATE 12/96
STAKING REVIEWED BY C.G.A. DATE 12/96
INSPECTIONS BY Rex Bass
FIELD VERIFICATION BY DATE
DRAWINGS CORRECTED BY C.G.A. DATE 1/97
MICRO-FILM INFORMATION
INCORPORATED BY DATE
NO.

BENCH MARKS
LOCATED AT THE NORTHEAST CORNER OF THE PROPERTY
CORNER A REBAR WITH CAP MARKED "LS 6446"
THE ELEVATION IS 5100.10 FEET

SURVEY INFORMATION
FIELD NOTES
NO. BY DATE

ENGINEER'S SEAL
RAMON L. LORENZ NEW MEXICO REGISTERED PROFESSIONAL ENGINEER
03-12-96

NO.	DATE	REMARKS	BY
		REVISIONS	

DESIGNED BY DL DATE 3/96
DRAWN BY STAFF DATE 3/96
CHECKED BY DL DATE 3/96

BRASHER & LORENZ, INC.
Consulting Engineers
4425 Juan Tabo Blvd. NE Suite 202
Albuquerque, New Mexico 87111
Ph: 505-296-0422 Fax: 505-296-0466

CITY OF ALBUQUERQUE
PUBLIC WORKS DEPARTMENT
ENGINEERING DEVELOPMENT GROUP

TITLE: WESTERN ESTATES SUBDIVISION
WATER & SEWER PLAN & PROFILE
CHRIS COURT NW

Design Review Committee: B.J.L. 5/30/96
City Engineer Approval
Last Design Update | Mo./Day/Yr. | Mo./Day/Yr.

City Project No. 5369.90 | Zone Map No. H-11 | Sheet 7 Of 8

5054UTIL 1=20 3/11/96

SCANNED BY LASON

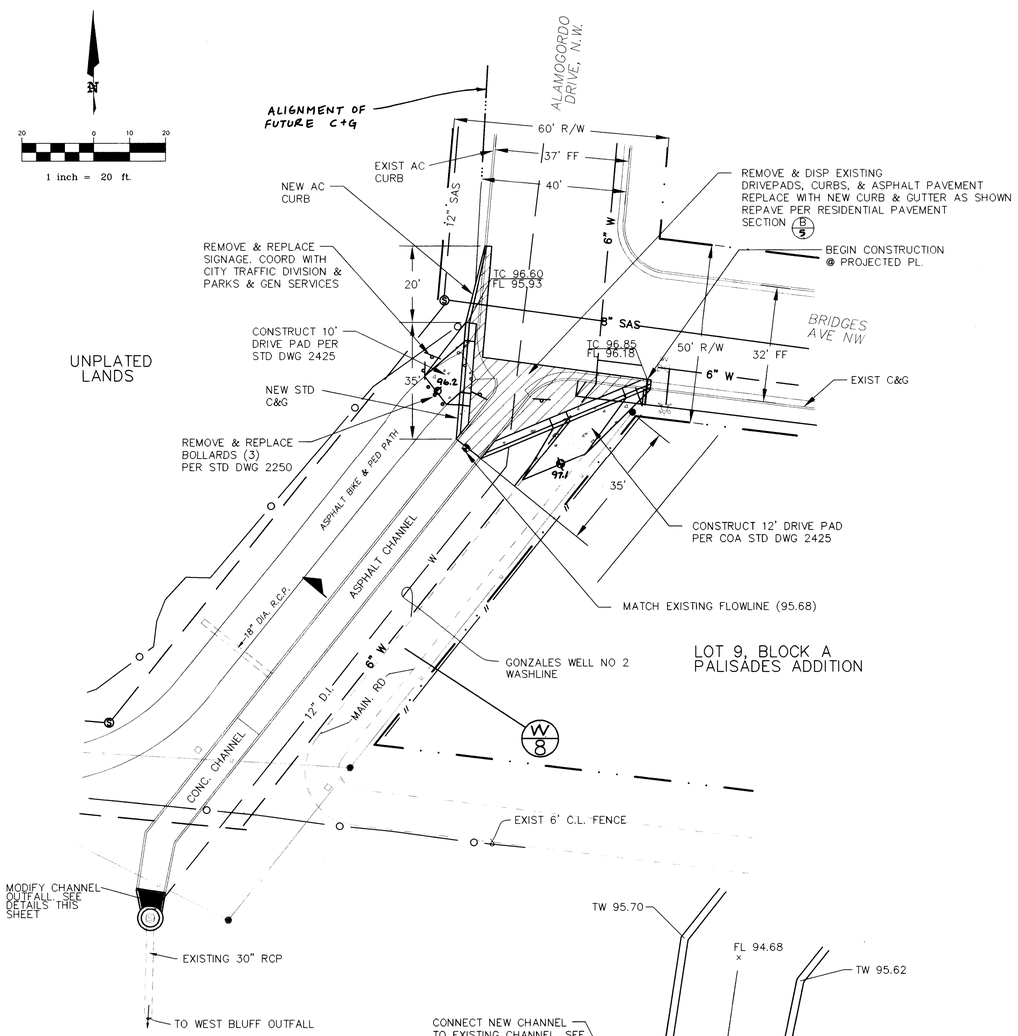

EXISTING CHANNEL – PLAN
1"= 20'

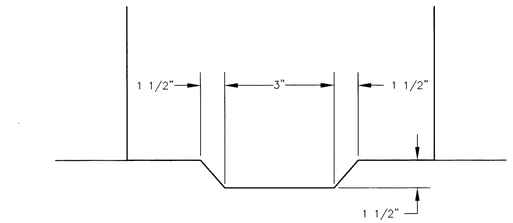

KEY DETAIL A/8
1"= 2'

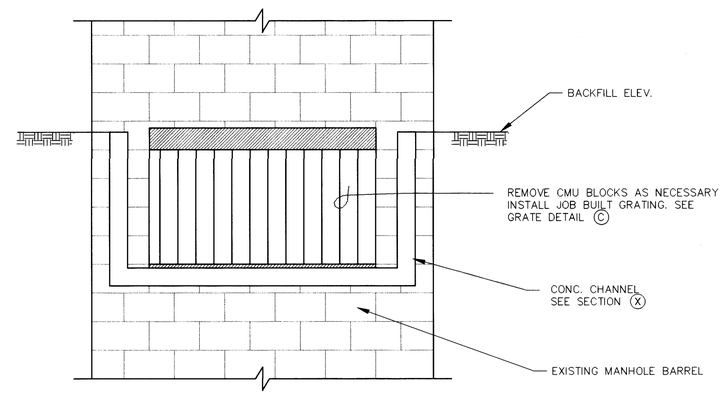

MANHOLE INLET DETAIL B/8
1"= 2'

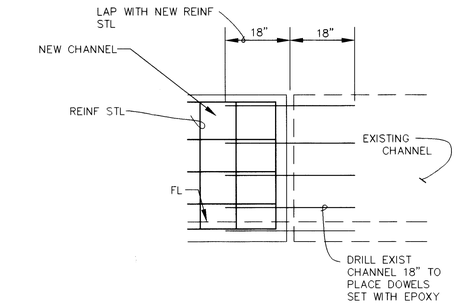

CHANNEL CONNECTION DETAIL D/8
NTS

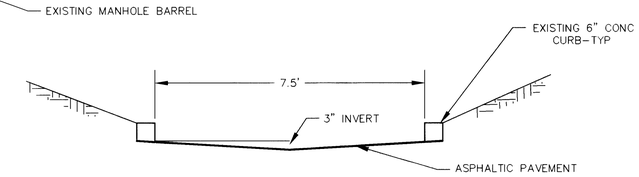

EXISTING CHANNEL SECTION W/8
1"= 2'

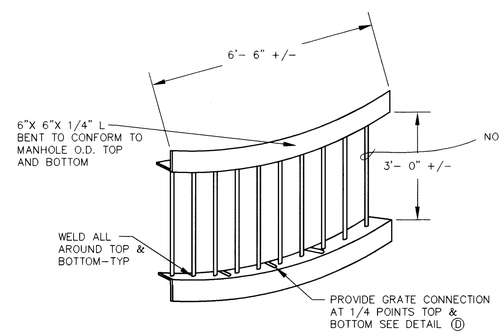

GRATE DETAIL C/8
NTS

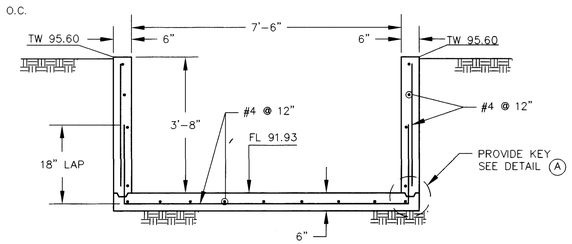

CHANNEL SECTION X/8
1" = 2'

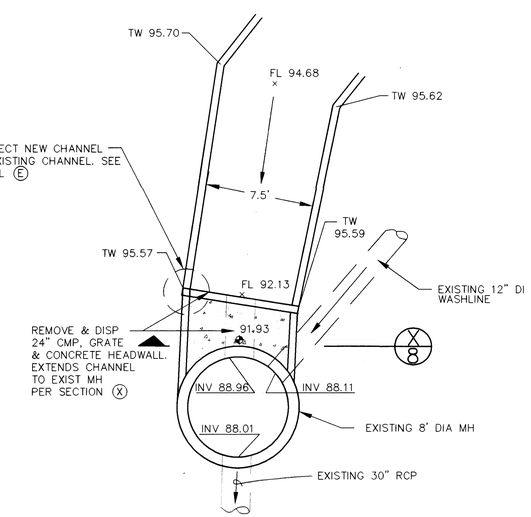

CHANNEL OUTFALL – PLAN
1" = 5'

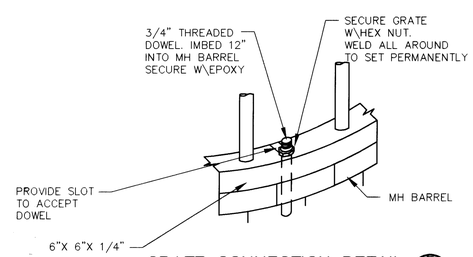

GRATE CONNECTION DETAIL D/8
NTS

SCANNED BY BY LASON

© COPYRIGHT

AS BUILT INFORMATION

CONTRACTOR	CCM	
WORK STAKED BY	C.O.A.	DATE 12/96
INSPECTOR'S ACCEPTANCE BY	Ray Baca	DATE 12/96
FIELD VERIFICATION BY		DATE
DRAWINGS CORRECTED BY	C.O.A.	DATE 1/97

MICRO-FILM INFORMATION

RECORDED BY DATE

NO.

BENCH MARKS

LOCATED AT THE NORTHEAST CORNER OF THE PROPERTY

CORNER A REBAR WITH CAP MARKED "LS 6446"

THE ELEVATION IS 5100.10 FEET

SURVEY INFORMATION

FIELD NOTES

NO.	BY	DATE

ENGINEER'S SEAL

3-12-96

NO.	DATE	REMARKS	BY

REVISIONS

		DATE
DESIGNED BY	DAL	3/96
DRAWN BY	DDE	3/96
CHECKED BY	DAL	3/96

BRASHER & LORENZ, INC.
Consulting Engineers
4425 Juan Tabo Blvd. NE Suite 202
Albuquerque, New Mexico 87111
Ph: 505-296-0422 Fax: 505-296-0466

CITY OF ALBUQUERQUE
PUBLIC WORKS DEPARTMENT
ENGINEERING DEVELOPMENT GROUP

TITLE: WESTERN ESTATES SUBDIVISION
STORM DRAINAGE IMPROVEMENTS CHANNEL "A"

Design Review Committee	City Engineer Approval	Last Design Update	Mo./Day/Yr.	Mo./Day/Yr.
B.G.H. 5/30/96				

City Project No.	Zone Map No.	Sheet	Of
5369.90	H-11	8	8