PUBLIC IMPROVEMENT PLANS

FOR

ROLLING HILLS SUBDIVISION-UNIT ONE
SAGE ROAD - STORM DRAIN

ALBUQUERQUE, NEW MEXICO

FEBRUARY 1998

PREPARED FOR:
LONGFORD HOMES OF NEW MEXICO
3200 CARLISLE, NE
ALBUQUERQUE, NM 87110

PREPARED BY:
ISAACSON & ARFMAN, P.A.
128 MONROE ST. NE
ALBUQUERQUE, NM 87108

INDEX TO DRAWINGS

SHEET NO.	TITLE
1	COVER SHEET
2-3	PLAT
4	STORM DRAIN PLAN & PROFILE
5	SIGNING AND CONSTRUCTION TRAFFIC CONTROL STANDARDS
6	TYPICAL TRAFFIC CONTROL AND SIGNING EXAMPLES
6A & 6B	GRADING & DRAINAGE PLAN

APPROVAL OF AS BUILT DRAWINGS
CHIEF CONSTRUCTION ENGINEER
Eto Chang
DATE 3/9/98

SURVEYOR'S CERTIFICATION

"I, Timothy Aldrich, a duly qualified Registered Professional Land Surveyor under the laws of the State of New Mexico, do hereby certify that the 'as-built' information shown on these drawings was obtained from field construction and 'as-built' surveys performed by me or under my supervision, that the 'as-built' information shown on these drawings was added by me or under my supervision, and that this 'as-built' information is true and correct to the best of my knowledge and belief." Aldrich Land Surveying is not responsible for any of the design concepts, calculations, specifications, or intent of the record drawings.

Timothy Aldrich, N.M. No. 7719 — 06-30-98 Date

LICENSED NEW MEXICO REGISTERED PROFESSIONAL LAND SURVEYOR

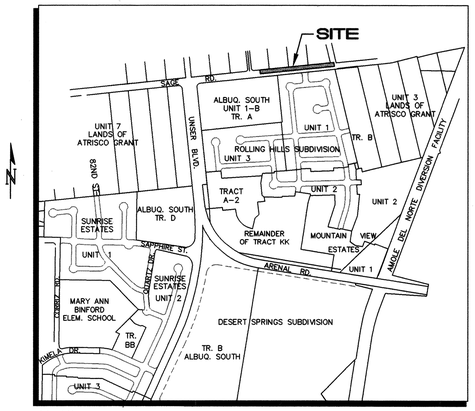

M-10 1"=750'±

VICINITY MAP

GENERAL NOTES

1. ALL WORK DETAILED ON THESE PLANS TO BE PERFORMED UNDER CONTRACT SHALL, EXCEPT AS OTHERWISE STATED OR PROVIDED FOR HEREON, BE CONSTRUCTED IN ACCORDANCE WITH THE CITY OF ALBUQUERQUE STANDARD SPECIFICATIONS FOR PUBLIC WORKS CONSTRUCTION 1986 EDITION AS AMENDED WITH UPDATE NO. 6.

2. ALL WORK ON THIS PROJECT SHALL BE PERFORMED IN ACCORDANCE WITH APPLICABLE FEDERAL, STATE, AND LOCAL LAWS, RULES, AND REGULATIONS CONCERNING CONSTRUCTION SAFETY AND HEALTH.

3. PRIOR TO CONSTRUCTION, THE CONTRACTOR SHALL EXCAVATE & VERIFY THE HORIZONTAL AND VERTICAL LOCATIONS OF ALL OBSTRUCTIONS. SHOULD A CONFLICT EXIST, THE CONTRACTOR SHALL NOTIFY THE ENGINEER SO THAT THE CONFLICT CAN BE RESOLVED WITH MINIMUM DELAY.

4. TWO (2) WORKING DAYS PRIOR TO ANY EXCAVATION, CONTRACTOR MUST CONTACT LINE LOCATING SERVICE @ 260-1990 FOR LOCATION OF EXISTING UTILITIES.

5. CONTRACTOR SHALL CONDUCT HIS OPERATIONS IN A MANNER WHICH WILL MINIMIZE INTERFERENCE WITH LOCAL TRAFFIC. CONTRACTOR SHALL COMPLY WITH ALL APPLICABLE LAWS, ORDINANCES, RULES, REGULATIONS, AND ORDERS OF ANY PUBLIC BODY HAVING JURISDICTION FOR THE SAFETY OF PERSONS OR PROPERTY, AND TO PROTECT THEM FROM DAMAGE, INJURY, OR LOSS. CONTRACTOR SHALL ERECT AND MAINTAIN, AS REQUIRED BY THE CONDITIONS AND PROGRESS OF THE WORK, ALL NECESSARY SAFEGUARDS FOR SAFETY CONTINUOUSLY AND NOT LIMITED TO NORMAL WORKING HOURS, THROUGHOUT THE DURATION OF THE PROJECT. CONTRACTOR SHALL ADHERE TO SECTION 19 OF THE GENERAL CONDITIONS OF THE CITY OF ALBUQUERQUE STANDARD SPECIFICATIONS FOR PUBLIC WORKS CONSTRUCTION, 1986, AS AMENDED WITH UPDATE NO. 6.

6. THE CONTRACTOR AGREES THAT HE SHALL ASSUME THE SOLE AND COMPLETE RESPONSIBILITY FOR THE JOB SITE CONDITIONS DURING THE COURSE OF CONSTRUCTION OF THIS PROJECT, INCLUDING SAFETY OF ALL PERSONS AND PROPERTY; THAT THIS REQUIREMENT SHALL APPLY CONTINUOUSLY AND NOT BE LIMITED TO NORMAL WORKING HOURS; AND THAT THE CONTRACTOR SHALL DEFEND, INDEMNIFY, AND HOLD HARMLESS THE OWNER & ENGINEER FROM ANY AND ALL LIABILITY REAL OR ALLEGED, IN CONNECTION WITH THE PERFORMANCE OF WORK ON THIS PROJECT, EXCEPTING LIABILITY ARISING FROM THE SOLE NEGLIGENCE OF THE OWNER OR ENGINEER.

7. TRAFFIC CONTROL: FIVE (5) WORKING DAYS PRIOR TO BEGINNING CONSTRUCTION THE CONTRACTOR SHALL SUBMIT TO THE CONSTRUCTION COORDINATION DIVISION A DETAILED CONSTRUCTION SCHEDULE. TWO (2) WORKING DAYS PRIOR TO CONSTRUCTION, THE CONTRACTOR SHALL OBTAIN A BARRICADING PERMIT FROM THE CONSTRUCTION COORDINATION DIVISION. CONTRACTOR SHALL NOTIFY BARRICADE ENGINEER (768-2551) PRIOR TO OCCUPYING AN INTERSECTION. SEE SECTION 19 OF THE SPECIFICATIONS. ALL STREET STRIPING ALTERED OR DESTROYED SHALL BE REPLACED WITH PLASTIC REFLECTORIZED PAVEMENT MARKINGS BY CONTRACTOR TO LOCATION AS EXISTING OR AS SHOWN IN THIS PLAN SET.

8. WHEN ABUTTING EXISTING PAVEMENT TO NEW, SAWCUT EXISTING PAVEMENT TO A STRAIGHT EDGE AND AT A RIGHT ANGLE, OR AS APPROVED BY THE FIELD ENGINEER. REMOVAL OF BROKEN OR CRACKED PAVEMENT WILL ALSO BE REQUIRED.

9. EXISTING CURB AND GUTTER NOT TO BE REMOVED UNDER THE CONTRACT WHICH IS DAMAGED OR DISPLACED BY THE CONTRACTOR SHALL BE REMOVED AND REPLACED BY THE CONTRACTOR AT HIS EXPENSE.

10. ALL FINAL BACKFILL FOR TRENCHES SHALL BE COMPACTED TO A MINIMUM 90% MAXIMUM DENSITY PER ASTM D-1557 AND AS DIRECTED BY SECTION 701.14.2 AND STANDARD DRAWING NUMBER 2315.

11. THE CONTRACTOR SHALL PROMPTLY CLEAN UP ANY MATERIAL EXCAVATED WITHIN THE PUBLIC RIGHT-OF-WAY OR PRIVATE ROADWAY EASEMENTS SO THAT THE EXCAVATED MATERIAL IS NOT SUSCEPTIBLE TO BEING WASHED DOWN THE STREET OR INTO ANY PUBLIC DRAINAGE FACILITY.

12. PROPOSED WATERLINE MATERIALS SHALL BE EITHER PVC PIPE MEETING AWWA C900 REQUIREMENTS (6"-12") OR DUCTILE IRON PIPE, THICKNESS CLASS 50 (6"-16").

13. ALL SANITARY SEWER LINE STATIONING REFERS TO SANITARY SEWER CENTERLINE STATIONING.

14. ALL FITTINGS ON WATERLINES SHALL HAVE RESTRAINED JOINTS AS NOTED ON THE PLANS.

15. CONTRACTOR SHALL SUPPORT ALL EXISTING, UNDERGROUND UTILITY LINES WHICH BECOME EXPOSED DURING CONSTRUCTION. PAYMENT FOR SUPPORTING WORK SHALL BE INCIDENTAL TO WATERLINE AND/OR SEWERLINE COSTS.

16. CONTRACTOR SHALL ASSIST THE ENGINEER/INSPECTOR IN THE RECORDING OF DATA ON ALL UTILITY LINES AND ACCESSORIES AS REQUIRED BY THE CITY OF ALBUQUERQUE FOR THE PREPARATION OF RECORD DRAWINGS. CONTRACTOR SHALL NOT COVER UTILITY LINES AND ACCESSORIES UNTIL ALL DATA HAS BEEN RECORDED.

17. THE CONTRACTOR SHALL NOTIFY THE ENGINEER NOT LESS THAN SEVEN (7) DAYS PRIOR TO STARTING WORK IN ORDER THAT THE ENGINEER MAY TAKE NECESSARY MEASURES TO INSURE THE PRESERVATION OF SURVEY MONUMENTS. CONTRACTOR SHALL NOT DISTURB PERMANENT SURVEY MONUMENTS WITHOUT THE CONSENT OF THE ENGINEER AND SHALL NOTIFY THE ENGINEER AND BEAR THE EXPENSE OF REPLACING ANY THAT MAY BE DISTURBED WITHOUT PERMISSION. REPLACEMENT SHALL BE DONE ONLY BY THE CITY SURVEYOR. WHEN A CHANGE IS MADE IN THE FINISHED ELEVATIONS OF THE PAVEMENT OF ANY ROADWAY IN WHICH A PERMANENT SURVEY MONUMENT IS LOCATED, CONTRACTOR SHALL, AT HIS OWN EXPENSE, ADJUST THE MONUMENT COVER TO THE NEW GRADE UNLESS OTHERWISE SPECIFIED. REFER TO SECTION 4.4 OF THE GENERAL CONDITIONS OF THE STANDARD SPECIFICATIONS.

18. PNM WILL PROVIDE AT NO COST TO THE CITY OR THE CONTRACTOR THE REQUIRED PERSONNEL FOR INSPECTION OR OBSERVATION DEEMED NECESSARY BY PNM WHILE THE CONTRACTOR IS EXPOSING PNM'S CABLES. HOWEVER, THE CONTRACTOR SHALL BE CHARGED THE TOTAL COST ASSOCIATED WITH REPAIRS TO ANY DAMAGED CABLES OR FOR ANY COST ASSOCIATED WITH SUPPORTING OR RELOCATING THE POLES AND CABLES DURING CONSTRUCTION.

19. WARNING--EXISTING UTILITY LINE LOCATIONS ARE SHOWN IN AN APPROXIMATE MANNER ONLY, AND SUCH LINES MAY EXIST WHERE NONE ARE SHOWN. THE LOCATION OF ANY SUCH EXISTING LINES IS BASED UPON INFORMATION PROVIDED BY THE UTILITY COMPANY, THE OWNER, OR BY OTHERS, AND THE INFORMATION MAY BE INCOMPLETE OR MAY BE OBSOLETE BY THE TIME CONSTRUCTION COMMENCES.

    THE ENGINEER HAS UNDERTAKEN NO FIELD VERIFICATION OF THE LOCATION, DEPTH, SIZE, OR TYPE OF EXISTING UNDERGROUND UTILITY LINES, MAKES NO REPRESENTATION PERTAINING THERETO, AND ASSUMES NO RESPONSIBILITY OR LIABILITY THEREFOR. THE CONTRACTOR SHALL INFORM ITSELF OF THE LOCATION OF ANY UTILITY LINE IN OR NEAR THE AREA OF THE WORK IN ADVANCE OF AND DURING EXCAVATION WORK. THE CONTRACTOR IS FULLY RESPONSIBLE FOR ANY AND ALL DAMAGE CAUSED BY ITS FAILURE TO LOCATE, IDENTIFY, AND PRESERVE ANY AND ALL EXISTING UTILITIES. THE CONTRACTOR SHALL COMPLY WITH STATE STATUTES, MUNICIPAL AND LOCAL ORDINANCES, RULES AND REGULATIONS PERTAINING TO THE LOCATION OF THESE LINES AND FACILITIES, IN PLANNING AND CONDUCTING EXCAVATION, WHETHER BY CALLING OR NOTIFYING THE UTILITIES, COMPLYING WITH "BLUE STAKES" PROCEDURES, OR OTHERWISE.

20. ANY WORK OCCURRING WITHIN AN ARTERIAL ROADWAY REQUIRES 24 HR. CONSTRUCTION.

21. ALL EXCAVATION, TRENCHING AND SHORING ACTIVITIES MUST BE ACCOMPLISHED IN ACCORDANCE WITH OSHA 29CFR 1926.650 SUBPART P.

22. CONTRACTOR SHALL MAINTAIN A GRAFFITI-FREE WORK SITE. CONTRACTOR SHALL PROMPTLY REMOVE ANY AND ALL GRAFFITI FROM EQUIPMENT, WHETHER PERMANENT OR TEMPORARY.

REV.	SHEETS	CITY ENGINEER	DATE	USER DEPARTMENT	DATE	USER DEPARTMENT	DATE

ENGINEERS STAMP & SIGNATURE

FRED C. ARFMAN STATE OF NEW MEXICO 7328 REGISTERED PROFESSIONAL ENGINEER
02-25-98

APPROVALS	ENGINEER	DATE
DRC Chairman		3-30-98
Transportation		3-03-98
Water/Wastewater	R.W. Kane	3-3-98
Hydrology		3-23-98
CIP		
Constr. Mngmt.		
Constr. Coord.		3-10-98

City Project No. 5379.93

* * * * * * * * * * * * * * * *

APPROVED FOR CONSTRUCTION

City Engineer Date

Sheet 1 Of 6

DRB NO. 95-442

ISAACSON & ARFMAN, P.A.
Consulting Engineering Associates
128 Monroe Street N.E.
Albuquerque New Mexico
878SDCVR.DWGems 02/25/98

UTILITY COUNCIL LOG NO.: 960311 16210652

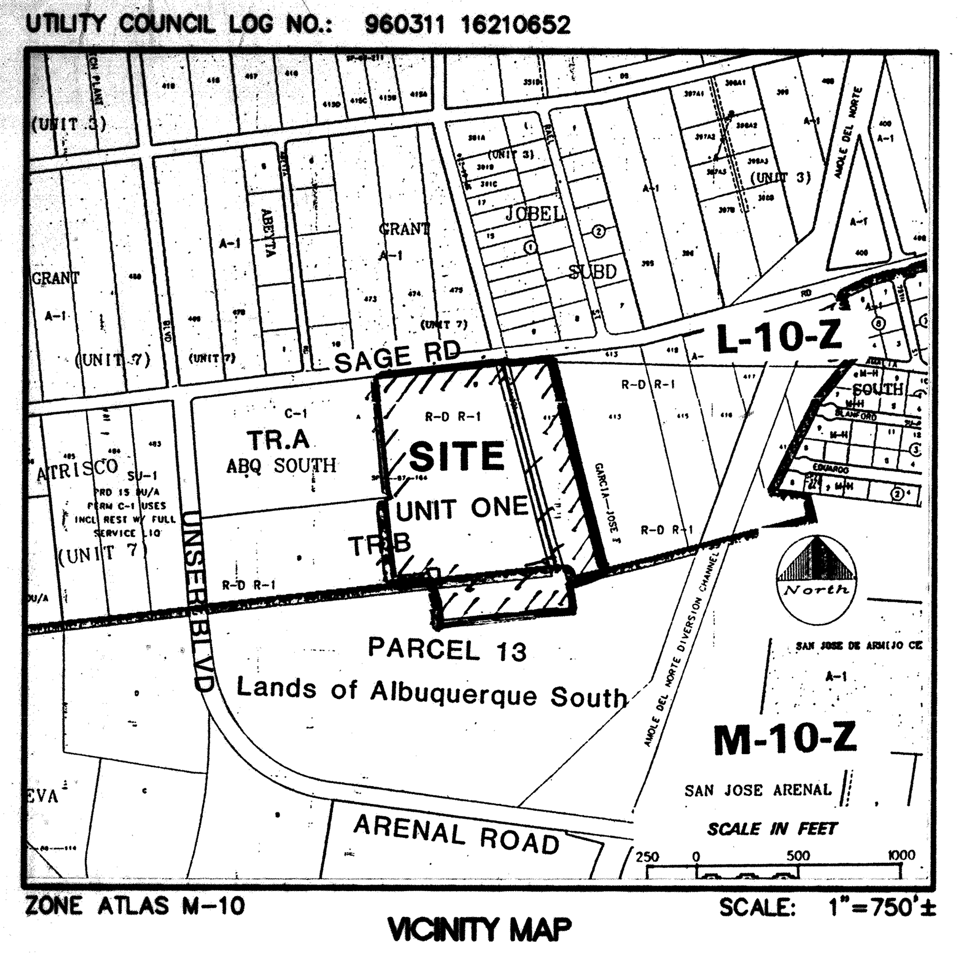

ZONE ATLAS M-10 — VICINITY MAP — SCALE: 1"=750'±

96059508

PLAT FOR ROLLING HILLS SUBDIVISION UNIT 1

TOWN OF ATRISCO GRANT
PROJECTED SECTION 27 AND 34, T. 10 N, R. 2 E, NMPM
CITY OF ALBUQUERQUE
BERNALILLO COUNTY, NEW MEXICO

MARCH 1996

State of New Mexico } SS
County of Bernalillo
This instrument was filed for record on

MAY 2 9 1996
8:57 o'clock A m. Recorded in Vol 96S
of records of said County Folio 113
Judy D. Woodward, Clerk & Recorder
Deputy Clerk

APPROVALS S-95-42 DRB NO. 95-442

PUBLIC SERVICE CO. OF NM--ELECTRIC SERVICES DIV.	4-23-96 DATE
PUBLIC SERVICE CO. OF NM--GAS SERVICES DIV.	4-23-96 DATE
U.S. WEST COMMUNICATIONS — Norma G Carrillo	4-17-96 DATE
JONES INTERCABLE — Violet Watson	4/15/96 DATE
CITY SURVEYOR, ENGR. DIV., P.W.D.	040296 DATE
TRAFFIC ENGINEERING, TRANS. DEV. DIV., P.W.D.	4-25-96 DATE
PARKS & GENERAL SERVICES DEPARTMENT	5-28-96 DATE
UTILITY DEVELOPMENT DIV., P.W.D. — Robert W. Kane	4-23-96 DATE
REAL PROPERTY DIVISION, D.F.M.	5-6-96 DATE
A.M.A.F.C.A.	5-24-96 DATE
CITY ENGINEER, PUBLIC WORKS DEPT.	5-24-96 DATE

APPROVAL AND CONDITIONAL ACCEPTANCE AS SPECIFIED BY THE ALBUQUERQUE SUBDIVISION ORDINANCE, ARTICLE XI OF THE REVISED ORDINANCES OF ALBUQUERQUE, N.M.

CITY PLANNER, ALBUQUERQUE PLANNING DIVISION — 5.28.96 DATE

SUBDIVISION DATA / NOTES

1. Total Number of Existing Tracts: 2
2. Total Number of Lots created: 77
3. Total Number of Tracts created: 2
4. Gross Subdivision Acreage: 35.6796 Ac.
5. Total Mileage of Full Width Streets Created: 0.6566
6. Bearings are New Mexico State Plane Grid Bearings Central Zone).
7. Distances are ground distances.
8. Bearings and distances in parenthesis are record.
9. Basis of boundary are the following plats (and documents) of record entitled:

   PLAT OF TRACTS "A" & "B", UNIT 1-B, LANDS OF ALBUQUERQUE SOUTH (05-13-87, C33-132)

   SPECIAL WARRANTY DEED (08-09-73, BK. D947,PAGES 898-901)

   all being records of Bernalillo County, New Mexico.
10. Field Survey performed November, 1995.
11. Title Report: Albuquerque Title Company, File No. 135330DS
12. This property is apparently affected by reservations, restrictions and agreements contained within easements, documents and memorandums as listed within the above mentioned Title Report.
13. These tracts are affected by a RIGHT-OF-WAY EASEMENT to American Telephone and Telegraph Company, dated December 13, 1929, recorded in Book 112, Page 290, said easement amended by a MODIFICATION EASEMENT, dated January 31, 1973, recorded in Book Misc. 298, Page 635, said easement assigned to the Mountain States Telephone and Telegraph Company by ASSIGNMENT dated December 26, 1974, recorded in Book Misc. 575, Page 928 all being records of Bernalillo County, New Mexico.
14. Drainage Covenant (04-23-87, Bk.Misc. 478A, Pg. 431) grants Tract A the right to convey surface flows in the form of storm runoff, drainage from watering landscaping, and other ordinary domestic use across the boundary lines common to Tracts A and B.
15. City Standard Utility Note II: "City of Albuquerque Water and Sanitary Sewer Service to Rolling Hills Unit One must be verified and coordinated with the Public Works Department, City of Albuquerque."
16. △ = Set four inch (4") aluminum alloy cap stamped "City of Albuquerque", "Centerline Monumentation", "Survey Marker", "Do Not Disturb", PLS #7719.
17. See "Bulk Land Waiver Notice," Sheet 3 of 3.

In approving this plat, PNM Electric Services and Gas Services (PNM) did not conduct a Title Search of the properties shown hereon. Consequently, PNM does not waive nor release any easement or easement rights to which it may be entitled.

LEGAL DESCRIPTION

A tract of land situate within the Town of Atrisco Grant, Projected Sections 27 and 34, Township 10 North, Range 2 East, New Mexico Principal Meridian, City of Albuquerque, Bernalillo County, New Mexico, being all of TRACT B, LANDS OF ALBUQUERQUE SOUTH, UNIT 1-B as the same is shown and designated on said plat filed for record in the office of the County Clerk of Bernalillo County, New Mexico, on May 13, 1987, in Volume C33, Folio 132; together with Tract 412, TOWN OF ATRISCO GRANT, UNIT NO. 3 as the same is shown and designated on Sheet No. 2 of PLAT SHOWING A PORTION OF TRACTS ALOTTED FROM TOWN OF ATRISCO GRANT filed for record in the office of the County Clerk of Bernalillo County, New Mexico, on December 5, 1944, in Volume 01, Folio 18; together with a portion of vacated right-of-way of Stinson Street SW (formerly known as Atrisco Drive); together with a portion of unplatted land described on a Warranty Deed of REMAINDER OF TRACT "KK", filed for record in the office of the County Clerk of Bernalillo County, New Mexico, on August 9, 1973, in Bk. D947, Pages 898-901, and being more particularly described as follows:

BEGINNING at the northwest corner of the herein described tract said point being common with the southwest corner of TRACT A, UNIT 1-B, LANDS OF ALBUQUERQUE SOUTH as the same is shown and designated on said plat filed for record in the office of the County Clerk of Bernalillo County, New Mexico on May 13, 1987 in Volume C33, Folio 132 and further being on the east right-of-way line of Unser Boulevard S.W. from whence the Albuquerque Control Survey Monument "1-M10" bears N 07°46'57" W, 462.21 feet;

LEGAL DESCRIPTION CONTINUED ON SHEET 3 OF 3.

DISCLOSURE STATEMENT

The purpose of this plat is to subdivide two (2) tracts, combined with a parcel of unplatted land and a vacated portion of Stinson St. S.W. into 77 residential lots (Unit 1), and to create two bulk land tracts, (Tracts A & B), and to grant temporary drainage easements and dedicate public roadways to the City of Albuquerque, to grant those easements necessary to provide service to the residential development, and to satisfy the conditions of vacating Stinson St. and those identified easements.

FREE CONSENT AND DEDICATION

The subdivision shown hereon is with the free consent and in accordance with the desires of the undersigned Owner(s) and/or Proprietor(s) thereof and said Owner(s) and/or Proprietor(s) do hereby dedicate all streets and public rights-of-way shown hereon to the City of Albuquerque in fee simple with warranty covenants and do hereby grant: all access, utility and drainage easements shown hereon including the right to construct, operate, inspect, and maintain facilities therein; and all public utility easements shown hereon for the common and joint use of gas, electrical power and communication services for buried distribution lines, conduits, and pipes for underground utilities where shown or indicated, and including the right of ingress and egress for construction and maintenance, and the right to trim interfering trees and shrubs. Said Owner(s) and/or Proprietor(s) do hereby consent to all of the foregoing and do hereby certify that this subdivision is their free act and deed.

OWNERS

BLOCKS A THROUGH G, ROLLING HILLS SUBDIVISION
LONGFORD AT ALBUQUERQUE I, A LIMITED PARTNERSHIP
BY: LONGFORD HOMES OF NEW MEXICO INC.,
A NEVADA CORPORATION, GENERAL PARTNER

John Murtagh, President — 3/11/96 Date
Longford Homes of New Mexico, Inc., General Partner

ACKNOWLEDGEMENT

STATE OF NEW MEXICO } SS
COUNTY OF BERNALILLO)

This instrument was acknowledged before me on 3/11/96, 1996, by John Murtagh as President of Longford Homes of New Mexico, Inc., a Nevada Corporation, on behalf of said corporation as General Partner of Longford at Albuquerque I.

My Commission Expires: 4/22/99

Ruth T. Lozano
Notary Public

OFFICIAL SEAL Ruth T. Lozano NOTARY PUBLIC STATE OF NEW MEXICO My Commission Expires 4-22-99

1-010-055-242-144-20302
Albuquerque South Loan Plus
Double Sunbelt 50996
1-010-055-242-386-10510

OWNER SIGNATURES AND ACKNOWLEDGEMENTS CONTINUED ON SHEET 3 OF 3.

SURVEYOR'S CERTIFICATION

"I, Timothy Aldrich, a duly qualified Registered Professional Land Surveyor under the laws of the State of New Mexico, do hereby certify that this plat and description were prepared by me or under my supervision, shows all easements as shown on the plat of record or made known to me by the owners and/or proprietors of the subdivision shown hereon, utility companies and other parties expressing an interest and meets the minimum requirements for monumentation and surveys of the Albuquerque Subdivision Ordinance, and further meets the Minimum Standards for Land Surveying in the State of New Mexico (Effective November 1, 1989 and revisions effective December 25, 1991 and February 2, 1994), and is true and correct to the best of my knowledge and belief".

Timothy Aldrich, P.S. No. 7719 — 04.02.96 Date

878PT1.DWGanw 3/11/96

96059508

PLAT FOR ROLLING HILLS SUBDIVISION UNIT 1

TOWN OF ATRISCO GRANT
PROJECTED SECTION 27 AND 34, T. 10 N, R. 2 E, NMPM
CITY OF ALBUQUERQUE
BERNALILLO COUNTY, NEW MEXICO

MARCH 1996

State of New Mexico } SS
County of Bernalillo
This instrument was filed for record on
MAY 2 9 1996
8:57 o'clock A m. Recorded in Vol 96S
of records of said County Folio 113
Judy D. Woodward, Clerk & Recorder
Deputy Clerk

CURVE TABLE

CURVE	RADIUS	LENGTH	TANGENT	CHORD	BEARING	DELTA
C1	1352.01'	4.70'	2.35'	4.70'	N 03°50'39" W	00°11'57"
C2	733.00'	20.47'	10.23'	20.46'	N 11°42'23" W	01°35'59"
C3	25.00'	19.38'	10.21'	18.90'	S 08°35'29" W	44°24'55"
C4	45.00'	48.74'	27.07'	46.40'	N 00°13'58" W	62°03'48"
C5	45.00'	40.98'	22.04'	39.58'	N 57°21'15" W	52°10'48"
C6	45.00'	44.71'	24.39'	42.89'	S 68°05'40" W	56°55'21"
C7	25.00'	19.38'	10.21'	18.90'	N 61°50'27" E	44°24'55"
C8	50.00'	71.85'	43.72'	65.83'	N 54°47'02" W	82°20'06"
C9	50.00'	78.54'	50.00'	70.71'	S 39°02'55" W	90°00'00"
C10	25.00'	1.43'	0.72'	1.43'	N 07°35'32" W	03°16'53"
C11	25.00'	18.95'	9.98'	18.50'	N 30°58'46" W	43°25'38"
C12	45.00'	44.21'	24.07'	42.45'	S 24°31'01" E	56°17'06"
C13	45.00'	34.42'	18.10'	33.59'	S 25°32'14" W	43°49'24"
C14	45.00'	40.89'	21.98'	39.50'	S 73°28'55" W	52°03'56"
C15	45.00'	22.74'	11.62'	22.50'	N 66°00'39" W	28°56'57"
C16	25.00'	19.38'	10.21'	18.90'	S 73°44'37" E	44°24'55"
C17	25.00'	39.27'	25.00'	35.36'	S 50°57'05" E	90°00'00"
C18	25.00'	39.27'	25.00'	35.36'	N 39°02'55" E	90°00'00"
C19	25.00'	39.27'	25.00'	35.36'	S 39°02'55" W	89°59'59"
C20	25.00'	39.27'	25.00'	35.36'	N 50°57'05" W	90°00'01"
C21	45.00'	21.64'	11.03'	21.43'	N 51°06'51" E	27°32'50"
C22	45.00'	40.53'	21.78'	39.18'	S 89°18'28" E	51°36'32"
C23	45.00'	25.16'	12.92'	24.84'	S 47°29'06" E	32°02'12"
C24	45.00'	28.42'	14.70'	27.95'	S 13°22'23" E	36°11'13"
C25	45.00'	28.42'	14.70'	27.95'	S 22°48'49" W	36°11'13"
C26	45.00'	30.46'	15.84'	29.88'	S 60°17'43" W	38°46'36"
C27	45.00'	40.11'	21.50'	38.80'	N 74°46'47" W	51°04'23"
C28	25.00'	20.38'	10.79'	19.82'	S 72°35'50" E	46°42'29"
C29	25.00'	20.38'	10.79'	19.82'	S 60°41'40" W	46°42'29"
C30	25.00'	39.27'	25.00'	35.36'	S 31°23'01" W	90°00'00"
C31	25.00'	35.03'	21.08'	32.23'	N 53°45'14" W	80°16'31"
C32	25.00'	39.27'	25.00'	35.36'	S 58°36'59" E	90°00'00"
C33	25.00'	43.51'	29.65'	38.22'	N 36°14'46" E	99°43'29"
C34	25.00'	35.93'	21.88'	32.91'	N 54°47'02" W	82°20'06"
C35	25.00'	42.61'	28.59'	37.64'	N 35°12'58" E	97°39'54"
C36	25.00'	38.37'	24.12'	34.71'	S 49°55'17" E	87°56'25"
C37	25.00'	39.99'	25.73'	35.86'	N 39°52'29" E	91°39'08"
C38	25.00'	38.55'	24.29'	34.84'	N 50°07'31" W	88°20'52"
C39	25.00'	40.17'	25.92'	35.99'	S 40°04'43" W	92°03'35"
C40	25.00'	37.33'	23.13'	33.96'	S 48°43'55" E	85°33'39"
C41	1306.01'	52.23'	26.12'	52.23'	N 04°48'20" W	02°17'30"
C42	1329.01'	52.16'	26.08'	52.15'	N 04°49'38" W	02°14'55"
C43	1352.01'	48.64'	24.32'	48.64'	N 04°46'30" W	02°03'41"
C44	25.00'	41.14'	26.95'	36.65'	S 41°20'28" W	94°17'37"
C45	25.00'	44.55'	30.93'	38.89'	N 37°26'08" E	102°06'15"
C46	25.00'	33.99'	20.21'	31.43'	N 52°33'52" W	77°53'45"
C47	683.00'	32.30'	16.15'	32.30'	N 12°15'41" W	02°42'35"
C48	708.00'	33.49'	16.75'	33.48'	N 12°15'41" W	02°42'35"
C49	733.00'	34.67'	17.34'	34.66'	N 12°15'41" W	02°42'35"
C50	733.00'	14.20'	7.10'	14.20'	N 13°03'41" W	01°06'37"
C51	25.00'	20.38'	10.79'	19.82'	N 29°18'20" W	46°42'30"
C52	45.00'	142.25'	4589.64'	90.00'	S 37°54'08" W	181°07'25"
C53	45.00'	134.43'	582.54'	89.73'	N 54°47'02" W	171°09'56"
C54	45.00'	214.74'	42.39'	61.71'	S 05°57'05" E	273°24'59"
C55	1352.01'	43.94'	21.97'	43.94'	N 04°52'29" W	01°51'43"

LINE TABLE

LINE	DIRECTION	DISTANCE
L1	S 13°36'59" E	2.87'
L2	S 84°01'03" W	30.27'
L3	S 84°02'54" W	30.27'
L4	N 13°36'59" W	7.04'
L5	N 13°36'27" W	7.37'
L6	S 76°16'48" W	29.41'
L7	N 05°57'06" W	2.95'

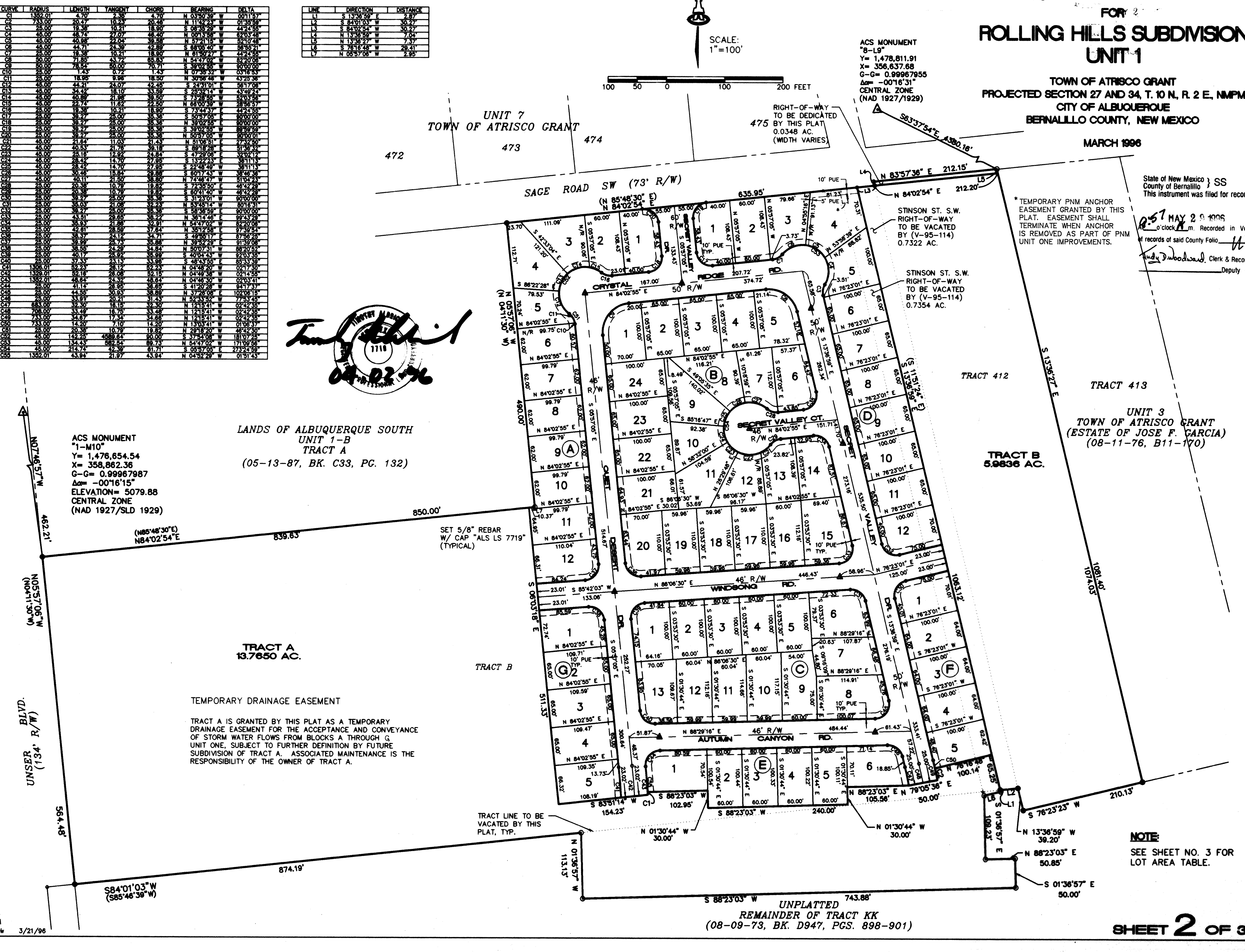

878PT2.DWGanw 3/21/96

CPN 5379.93 Sht. 2 of 6

LEGAL DESCRIPTION--Continued from Sheet 1

THENCE leaving said east right-of-way line N 84°02'54" E, 850.00 feet along a line common with the south line of said TRACT A to a point, said point being common with the southeast corner of said TRACT A;

THENCE N 05°57'06" W, 490.00 feet along a line common with the east line of said TRACT A to a point, said point being common with the northeast corner of said TRACT A and further being on the south right-of-way line of Sage Road S.W.;

Thence along said south right-of-way line N 84°02'54" E, 635.95 feet to a point on the westerly property line of said Tract 412;

Thence leaving said south right-of-way line N 13°36'59" W, 7.04 feet along westerly property line to the northwest corner of said Tract 412;

Thence N 83°57'36" E, 212.15 feet along a line common with the northerly line of Tract 412, being the southerly right-of-way line of Sage Road to the northeast corner of said Tract 412; said point being common with the northwest corner of TRACT 413, UNIT 3, (ESTATE OF JOSE F. GARCIA), as the same is shown and designated on said plat filed for record in the office of the County Clerk of Bernalillo County, N.M. on August 11, 1976, in Volume B11, Folio 170;

Thence S 13°36'27" E, 1081.40 feet along the westerly line of said Tract 413 to the southwest corner of said Tract 413;

Thence S 76°23'23" W, 210.13' along the southerly line of said Tract 412 to the southwest corner of said Tract 412;

Thence N 13°36'59" W, 39.20' along the westerly property line of Tract 412 to a point being the south east corner of said vacated Stinson St. S.W.;

Thence S 84°01'03" W, 30.27 feet along the southerly vacated right-of-way line of said street to a point;

Thence 13°36'59" E, 2.87 feet to a point;

Thence S 76°16'48" W, 29.41 feet to a point;

Thence S 01°36'57" E, 109.23 feet to a point;

Thence N 88°23'03" E, 50.85 feet to a point;

Thence S 01°36'57" E, 50.00 feet to a point;

Thence S 88°23'03" W, 743.88 feet to a point;

Thence N 01°36'57" W, 113.13 feet to a point on the southerly property line of said TRACT B, LANDS OF ALBUQUERQUE SOUTH;

Thence S 84°01'03" W, 874.19 feet along said line to a point being common with the southwest corner of said TRACT B, and further being a point on the easterly right-of-way line of Unser Blvd., S.W.;

Thence along said east right-of-way line N 05°57'06" W, 564.48 feet to the point of beginning and containing 35.6796 acres more or less.

BULK LAND WAIVER NOTICE

A VARIANCE OR WAIVER FROM CERTAIN SUBDIVISION REQUIREMENTS HAS BEEN GRANTED BY THE CITY AND THE ALBUQUERQUE METROPOLITAN ARROYO FLOOD CONTROL AUTHORITY IN CONNECTION WITH THIS PLAT. DETAILS OF THE VARIANCE OR WAIVER WERE FILED IN THE OFFICE OF THE COUNTY CLERK OF BERNALILLO COUNTY, NEW MEXICO, ON MAY 29, 1996 IN BK. 96-14 PAGE 9184-85

FUTURE SUBDIVISION OF LANDS WITHIN THIS PLAT, ZONING SITE DEVELOPMENT PLAN APPROVALS, AND DEVELOPMENT PERMITS MAY BE CONDITIONED UPON DEDICATION OF RIGHTS-OF-WAY AND EASEMENTS, AND/OR UPON INFRASTRUCTURE IMPROVEMENTS BY THE OWNER FOR WATER, SANITARY SEWER, STREETS, DRAINAGE, GRADING AND PARKS IN ACCORDANCE WITH CURRENT RESOLUTIONS, ORDINANCES AND POLICIES IN EFFECT AT THE TIME FOR ANY SPECIFIC PROPOSAL.

THE CITY (AND AMAFCA WITH REFERENCE TO DRAINAGE) MAY REQUIRE AND/OR PERMIT EASEMENTS TO BE ADDED, MODIFIED, OR REMOVED WHEN FUTURE PLATS OR SITE DEVELOPMENT PLANS ARE APPROVED.

BY ITS APPROVAL THE CITY MAKES NO REPRESENTATION OR WARRANTIES AS TO AVAILABILITY OF UTILITIES, OR FINAL APPROVAL OF ALL REQUIREMENTS INCLUDING (BUT NOT LIMITED TO) THE FOLLOWING ITEMS: WATER AND SANITARY SEWER AVAILABILITY; FUTURE STREET DEDICATIONS AND/OR IMPROVEMENTS; PARK AND OPEN SPACE REQUIREMENTS; DRAINAGE REQUIREMENTS AND/OR IMPROVEMENTS; AND EXCAVATION, FILLING OR GRADING REQUIREMENTS. ANY PERSON INTENDING DEVELOPMENT OF LANDS WITHIN THIS SUBDIVISION IS CAUTIONED TO INVESTIGATE THE STATUS OF THESE ITEMS.

04-02-96

LOT AREA TABLE

BLOCK (A)

LOT	AREA
1	6780
2	6197
3	7031
4	7727
5	5423
6	6187
7	6187
8	6187
9	6187
10	6187
11	6857
12	7323

BLOCK (B)

LOT	AREA
1	6463
2	6500
3	6500
4	6500
5	6769
6	7087
7	5703
8	7159
9	7329
10	5427
11	7101
12	6033
13	6195
14	6635
15	8794
16	6660
17	6596
18	6596
19	6596
20	7276
21	6509
22	6500
23	6500
24	6500

BLOCK (C)

LOT	AREA
1	6450
2	6000
3	6000
4	6000
5	6000
6	8104
7	7284
8	9005
9	6969
10	6953
11	6803
12	6654
13	7019

BLOCK (D)

LOT	AREA
1	6780
2	6506
3	6808
4	8999
5	7199
6	6500
7	6500
8	6500
9	6500
10	6500
11	6500
12	6866

BLOCK (E)

LOT	AREA
1	7260
2	6029
3	6023
4	6016
5	6010
6	6833

BLOCK (F)

LOT	AREA
1	6867
2	6400
3	6400
4	6400
5	6251

BLOCK (G)

LOT	AREA
1	7685
2	7127
3	7119
4	7112
5	7210

96059508

PLAT
FOR
ROLLING HILLS SUBDIVISION UNIT 1

TOWN OF ATRISCO GRANT
PROJECTED SECTION 27 AND 34, T. 10 N., R. 2 E., NMPM
CITY OF ALBUQUERQUE
BERNALILLO COUNTY, NEW MEXICO

MARCH 1996

State of New Mexico
County of Bernalillo } SS
This instrument was filed for record on
MAY 20 1996 at 9:55 o'clock AM Recorded in Vol. 96C of records of said County Folio 13
Clerk & Recorder
Deputy Clerk

PUBLIC UTILITY EASEMENTS

PUBLIC UTILITY EASEMENTS SHOWN ON THIS PLAT ARE GRANTED FOR THE COMMON AND JOINT USE OF:

1. THE PUBLIC SERVICE CO. OF NM--ELECTRIC SERVICES DIVISION FOR THE INSTALLATION, MAINTENANCE, AND SERVICE OF UNDERGROUND/OVERHEAD ELECTRICAL LINES, TRANSFORMERS, AND ANY OTHER EQUIPMENT, FIXTURES, STRUCTURES, AND RELATED FACILITIES REASONABLY NECESSARY TO PROVIDE ELECTRICAL SERVICE.
2. U.S. WEST FOR THE INSTALLATION, MAINTENANCE AND SERVICE OF ALL BURIED COMMUNICATION LINES AND OTHER RELATED EQUIPMENT AND FACILITIES REASONABLY NECESSARY TO PROVIDE COMMUNICATION SERVICES, INCLUDING BUT NOT LIMITED TO ABOVE GROUND PEDESTALS AND CLOSURES.
3. JONES INTERCABLE FOR THE INSTALLATION, MAINTENANCE, AND SERVICE OF SUCH LINES, CABLE, AND OTHER RELATED EQUIPMENT AND FACILITIES REASONABLY NECESSARY TO PROVIDE CABLE TV SERVICE.
4. THE PUBLIC SERVICE CO. OF NM--GAS SERVICES DIVISION FOR THE INSTALLATION, MAINTENANCE, AND SERVICE OF SUCH DISTRIBUTION AND SERVICE LINES AND FACILITIES REASONABLY NECESSARY TO PROVIDE GAS SERVICE.

INCLUDED IS THE RIGHT TO BUILD, REBUILD, CONSTRUCT, RECONSTRUCT, LOCATE, RELOCATE, CHANGE, REMOVE, MODIFY, RENEW, OPERATE, AND MAINTAIN FACILITIES FOR THE PURPOSES DESCRIBED ABOVE, TOGETHER WITH FREE ACCESS TO, FROM, AND OVER SAID EASEMENT, INCLUDING SUFFICIENT WORKING AREA SPACE FOR ELECTRIC TRANSFORMERS, WITH THE RIGHT AND PRIVILEGE TO TRIM AND REMOVE TREES, SHRUBS, OR BUSHES WHICH INTERFERE WITH THE PURPOSES SET FORTH HEREIN. NO BUILDING, SIGN, OR OTHER STRUCTURE SHALL BE ERECTED OR CONSTRUCTED ON SAID EASEMENTS, NOR SHALL ANY WELL BE DRILLED OR OPERATED THEREON. PROPERTY OWNERS SHALL BE SOLELY RESPONSIBLE FOR CORRECTING ANY VIOLATIONS OF NATIONAL ELECTRICAL SAFETY CODE CAUSED BY CONSTRUCTION OF POOLS, DECKING, OR ANY STRUCTURES ADJACENT TO OR NEAR EASEMENTS SHOWN ON THIS PLAT.

OWNERS--Continued from Sheet 1

TRACT A, ROLLING HILLS SUBDIVISION
ALBUQUERQUE SOUTH GENERAL PARTNERSHIP

Joseph L. Werntz — 3-21-96
Joseph L. Werntz, President — Date
Arjay Inc., Co-Managing Partner

ACKNOWLEDGEMENT

STATE OF NEW MEXICO)
} SS
COUNTY OF BERNALILLO)

This instrument was acknowledged before me on March 21, 1996, by Joseph L. Werntz as President of Arjay Inc., the Co-Managing Partner of Albuquerque South General Partnership, a New Mexico General Partnership, on behalf of said partnership.

My Commission Expires: 7/24/97
Notary Public

OFFICIAL SEAL
ROBERTA ROMERO
NOTARY PUBLIC STATE OF NEW MEXICO
Notary Bond Filed with Secretary of State
My Commission Expires

TRACT B, ROLLING HILLS SUBDIVISION
ALEJANDRO ESTEPA

Alejandro Estepa — 3-21-96
Alejandro Estepa, Owner — Date

ACKNOWLEDGEMENT

STATE OF NEW MEXICO)
} SS
COUNTY OF BERNALILLO)

This instrument was acknowledged before me on March 21, 1996, by Alejandro Estepa as Owner of Tract B, Rolling Hills Subdivision.

My Commission Expires: 4/22/99
Notary Public

OFFICIAL SEAL
Ruth T. Lozano
NOTARY PUBLIC
STATE OF NEW MEXICO
My Commission Expires 4/22/99

CPN 5379.93

Sht. 3 of 6

878PT3.DWGonw 3/21/96

SHEET 3 OF 3

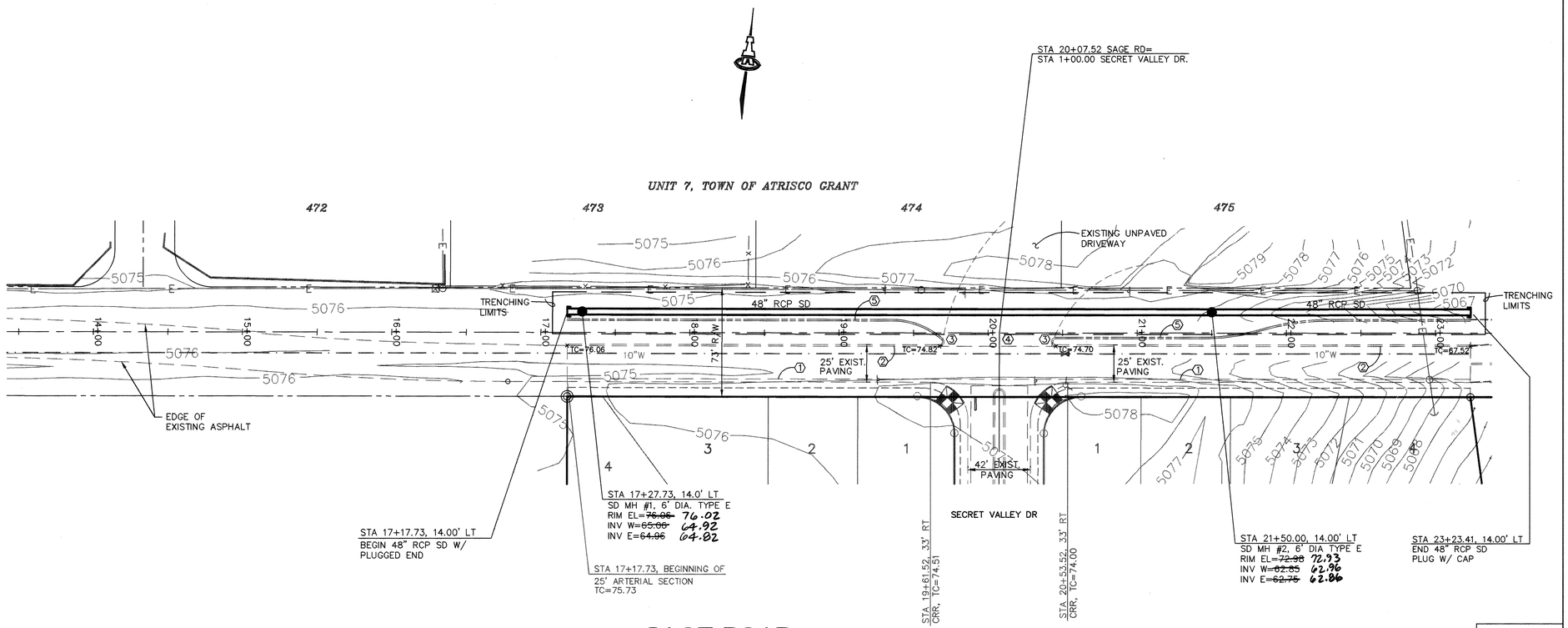

SAGE ROAD

SCALE:
1" = 40' HOR.
1" = 10' VERT.

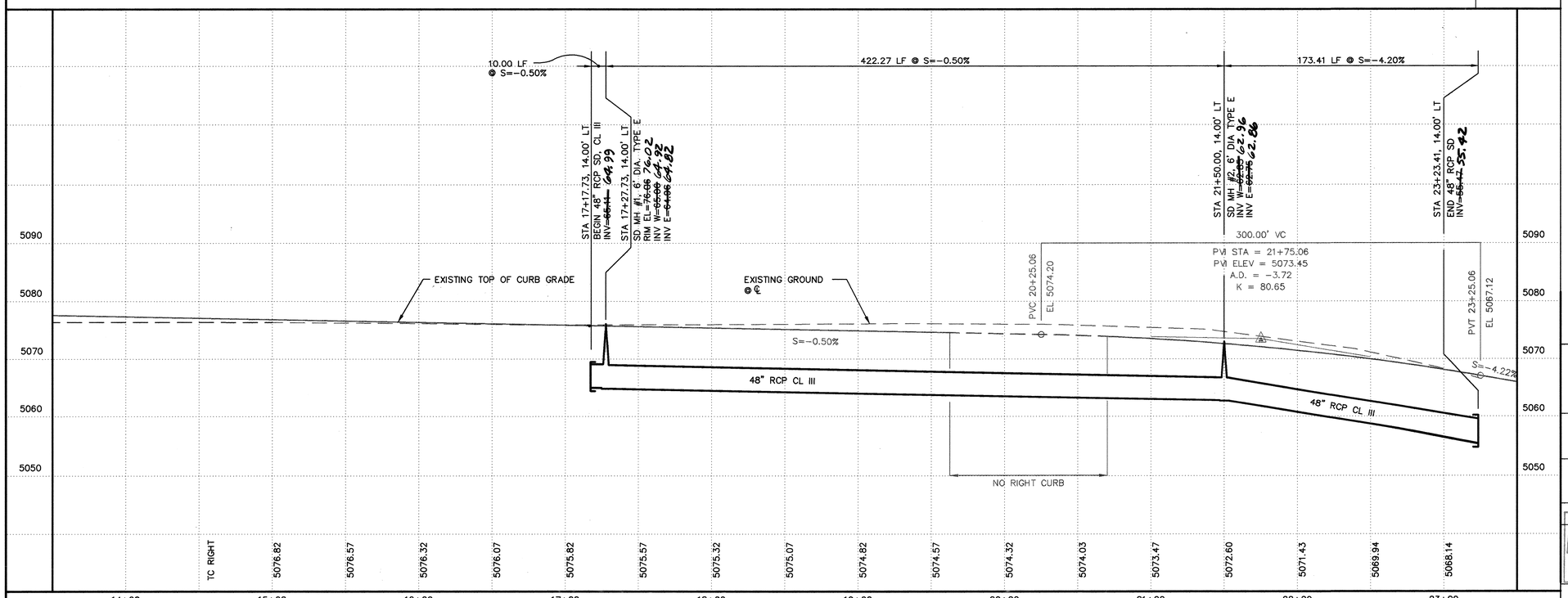

KEYED CONSTRUCTION NOTES

1. EXISTING STD CURB & GUTTER PER COA STD DWG #2415.
2. EXISTING MEDIAN CURB & GUTTER PER COA STD DWG #2415.
3. REMOVE & DISPOSE OF MEDIAN NOSE CURB & GUTTER AS NECESSARY.
4. A 25' ACCESS TO THE EXISTING DRIVEWAY CUT BETWEEN STA 19+67.41 AND STA 20+45.41 MUST REMAIN OPEN AT ALL TIMES. PHASING OF THE TRENCHING AND PIPE LAYOUT WILL BE NECESSARY IN THIS AREA TO MAINTAIN AN ADEQUATE ACCESS TO THE DRIVEWAY. BARRICADING ALONG THE OPEN TRENCH ENDS AT THE DRIVEWAY AND DIRECTIONAL BARRICADES ALONG THE DRIVEWAY MAY BE NECESSARY.
5. FUTURE MEDIAN CURB & GUTTER.

GENERAL NOTES

1. MINOR SPOIL PILES WILL BE ALLOWED TO THE SOUTH OF THE STORM DRAIN PIPING. PILES SHALL BE KEPT TO A MINIMUM BY ROTATING THE EXCAVATED MATERIAL INTO THE BACKFILL OPERATION.
2. PLACE TYPE I BARRICADES ALONG WORK AREA WITH OPEN TRENCH.

AS-BUILT INFORMATION
CONTRACTOR TRIAD
WORK STAKED BY ALS, INC. DATE 9/8
STAKING ACCEPTANCE BY Mark Goodman DATE
FIELD VERIFICATION BY ALS, INC DATE 9/8
DRAWINGS CORRECTED BY ALS, INC DATE 6/98
MICRO-FILM INFORMATION
RECORDED BY DATE
NO.

BENCH MARKS
ALBUQUERQUE CONTROL SURVEY MONUMENT "T1-M10"
ELEV: 5079.88

SURVEY INFORMATION
FIELD NOTES

1	ALS	1/96

ENGINEER'S SEAL
FRED C. ARFMAN
STATE OF NEW MEXICO
7322
REGISTERED PROFESSIONAL ENGINEER
06-22-98

NO.	DATE	REMARKS	BY
		REVISIONS	
		DESIGN	

		DATE
DESIGNED BY	MJC	2/98
DRAWN BY	EMS	2/98
CHECKED BY	I&A	3/98

ISAACSON & ARFMAN, P.A.
Consulting Engineering Associates
128 Monroe Street N.E.
Albuquerque New Mexico
878SD.DWGems 02/20/98

CITY OF ALBUQUERQUE
PUBLIC WORKS DEPARTMENT
ENGINEERING GROUP

TITLE: **ROLLING HILLS UNIT ONE SUBDIVISION**
SAGE ROAD
STORM DRAIN PLAN & PROFILE

Design Review Committee: APPROVED MAR 30 1998 DESIGN REVIEW COMMITTEE
City Engineer Approval
Last Design Update — Mo./Day/Yr. — Mo./Day/Yr.

City Project No. 5379.93 | Zone Map No. M10 | Sheet 4 Of 6

CONSTRUCTION TRAFFIC CONTROL GENERAL NOTES

1. CONTRACTOR MUST OBTAIN FROM CONSTRUCTION COORDINATION AN EXCAVATION/BARRICADING PERMIT BEFORE ENGAGING IN ANY CONSTRUCTION, MAINTENANCE OR REPAIR WORK IN ANY OF THE CITY OF ALBUQUERQUE'S RIGHTS-OF-WAY. EMERGENCY WORK THAT WOULD PRESERVE LIFE OR PROPERTY IS EXCLUDED WITH THE UNDERSTANDING, THAT A PERMIT SHALL BE OBTAINED WITHIN 24 TO 48 HOURS.

2. CONTRACTOR SHALL AT THE TIME OF PERMIT REQUEST, SUBMIT FOR APPROVAL BY CONSTRUCTION COORDINATION, A TRAFFIC CONTROL PLAN DETAILING ALL EXISTING TOPOGRAPHY SUCH AS LANE WIDTHS, DRIVEWAYS, AND BUSINESS/RESIDENTIAL ACCESSES. THE TRAFFIC CONTROL PLAN SHALL INCLUDE ALL PHASES OF WORK AND SCHEDULES INVOLVED IN THE CONSTRUCTION PROJECT. ANY SEPERATE PHASES OF A CONSTRUCTION PROJECT SHALL BE GIVEN AN INDIVIDUAL PERMIT EACH. BLANKET PERMITS WILL NOT BE ISSUED.

3. THESE TYPICAL TRAFFIC CONTROL PLANS DO NOT REFLECT THE EXISTING TOPOGRAPHY SUCH AS DRIVEWAYS, LANE WIDTHS, AND BUSINESS/RESIDENTIAL ACCESSES. EVERY LOCATION THAT REQUIRES CONSTRUCTION TRAFFIC CONTROL SHALL HAVE A DETAILED TRAFFIC CONTROL PLAN SHOWING ALL EXISTING TOPOGRAPHY.

4. CONSTRUCTION SHALL NOT BEGIN UNLESS A TRAFFIC CONTROL PLAN HAS BEEN APPROVED AND VERIFIED BY CONSTRUCTION COORDINATION.

5. CONSTRUCTION COORDINATION SHALL BE NOTIFIED 48 HOURS PRIOR TO ANY TRAFFIC CONTROL CHANGES NEEDED BY CONTRACTOR, THAT WERE NOT PREVIOUSLY APPROVED. THESE TRAFFIC CONTROL CHANGES SHALL BE REQUESTED IN WRITING ACCOMPANIED WITH A TRAFFIC CONTROL PLAN REFLECTING SUCH CHANGES.

6. ALL CONSTRUCTION TRAFFIC CONTROL DEVICES SHALL COMPLY TO THE MANUAL ON UNIFORM TRAFFIC CONTROL DEVICES (MUTCD), LATEST EDITION. IT IS THE RESPONSIBILITY OF THE CONTRACTOR TO INSTALL, SERVICE AND MAINTAIN ALL TRAFFIC CONTROL DEVICES. TRAFFIC CONTROL DEVICES SHALL NOT BE REMOVED OR ALTERED IN ANY WAY WITHOUT THE APPROVAL OF CONSTRUCTION COORDINATION, PER SECTION 6A-4 OF THE MUTCD, LATEST EDITION.

7. THE CONSTRUCTION TRAFFIC CONTROL INITIAL SET-UP SHALL BE BY AN AMERICAN TRAFFIC SAFETY SERVICES ASSOCIATION (ATSSA) CERTIFIED WORKSITE TRAFFIC SUPERVISOR. THE MAINTENANCE AND SERVICING SHALL ALSO BE DONE BY AN ATSSA CERTIFIED WORKSITE TRAFFIC SUPERVISOR OR EQUIVALENT.

8. CONTRACTOR IS RESPONSIBLE TO MAINTAIN AND SERVICE ALL TRAFFIC CONTROL DEVICES 24 HOURS A DAY, 7 DAYS A WEEK THROUGHOUT LENGTH OF PROJECT. CONTRACTOR IS RESPONSIBLE THAT ALL TRAFFIC CONTROL DEVICES COMPLY WITH THE MUTCD, LATEST EDITION.

9. ALL ADVANCE WARNING SIGNS SHALL BE DOUBLE INDICATED WHENEVER THERE ARE MULTI-LANE TRAFFIC IN ANY ONE GIVEN DIRECTION AND THERE IS SUFFICIENT MEDIAN SPACE.

10. ALL BARRICADES IN ALL TAPERS AND TANGENTS SHALL BE PLACED APART, A DISTANCE MEASURED IN FEET, EQUAL TO THAT OF THE POSTED SPEED LIMIT. NO EXCEPTIONS UNLESS APPROVED BY CONSTRUCTION COORDINATION PER MUTCD SECTION 6A-4.

△1 11. ALL WORK IN ARTERIAL ROADWAYS SHALL BE ON A CONTINUOUS 24 HOUR PER DAY BASIS UNTIL COMPLETED.

12. CONTRACTOR IS RESPONSIBLE TO PROVIDE CONSTRUCTION COORDINATION, A WEEKLY LOG OF DAILY INSPECTIONS OF BARRICADE AND MAINTENANCE SCHEDULES ON PROJECTS THAT ARE OVER ONE WEEK DURATION.

13. EQUIPMENT OR MATERIALS SHALL NOT BE STORED WITHIN 15 FEET OF A TRAVELED TRAFFIC LANE DURING NON-WORKING HOURS WITHOUT THE APPROVAL OF CONSTRUCTION COORDINATION.

14. CONTRACTOR SHALL PROVIDE AND MAINTAIN A SAFE AND ADEQUATE MEANS OF CHANNELIZING PEDESTRIAN TRAFFIC AROUND AND THROUGH THE CONSTRUCTION AREA.

15. CONTRACTOR IS RESPONSIBLE FOR OBLITERATION OF ANY CONFLICTING STRIPING AND RESPONSIBLE FOR ALL TEMPORARY STRIPING.

16. CONTRACTOR SHALL MAINTAIN ACCESS TO ALL FACILITIES, BUSINESSES AND/OR RESIDENTS AT ALL TIMES.

17. CONTRACTOR SHALL PROVIDE ACCESS SIGNS FOR BUSINESSES LOCATED WITHIN THE CONSTRUCTION AREA UNDER THE SUPERVISION OF CONSTRUCTION COORDINATION. EACH ACCESS SIGN SHALL HAVE 5 INCH, WHITE OPAQUE LETTERING ON BLUE REFLECTORIZED BACKGROUND. ACCESS SIGNS SHALL BE CONSIDERED INCIDENTAL TO THE BID AND NOT PART OF THE CONTRACT UNLESS OTHERWISE STATED. NO MORE THAN 3 BUSINESSES SHALL BE LISTED ON A ACCESS SIGN. SHOPPING CENTERS AND MALLS SHALL BE LISTED AS SUCH.

18. ALL ADVANCE WARNING SIGNS SHALL MEET THE MINIMUM REFLECTIVE INTENSITY REQUIREMENTS SET FORTH BY THE CITY OF ALBUQUERQUE. CONSTRUCTION COORDINATION SHALL DETERMINE ALL REQUIREMENTS AND APPROVE OR DISAPPROVE ANY ADVANCE WARNING SIGN PER SECTION 6A-4 OF THE MUTCD, LATEST EDITION.

△2 19. 48 HOURS PRIOR TO OCCUPYING OR CLOSING OF A RIGHT-OF-WAY, CONTRACTOR SHALL NOTIFY: POLICE, FIRE DEPARTMENT, SCHOOLS, HOSPITALS, TRANSIT AUTHORITY, BUSINESSES AND/OR RESIDENTS THAT WILL BE AFFECTED BY THE CONSTRUCTION.

20. ANY FIELD ADJUSTMENTS SHALL BE APPROVED BY CONSTRUCTION COORDINATION.

21. EXCAVATIONS SHALL BE PLATED, TEMPORARILY PATCHED OR RESURFACED PRIOR TO OPENING OF TRAFFIC. A MINIMUM OF 11 FEET SHALL BE PROVIDED FOR TRAFFIC IN ANY GIVEN DIRECTION. CONTRACTOR IS RESPONSIBLE FOR ANY WORK INVOLVED IN SATISFYING THESE REQUIREMENTS.

22. CONTRACTOR SHALL AT ALL TIMES COMPLY WITH THE FOLLOWING:
1. STANDARDS AND REQUIREMENTS SET FORTH IN THE MANUAL ON UNIFORM TRAFFIC CONTROL DEVICES, LATEST EDITION.
2. THE CITY OF ALBUQUERQUE TRAFFIC CODE, LATEST EDITION.
3. SECTION 19 OF THE CITY OF ALBUQUERQUE'S STANDARD SPECIFICATIONS FOR PUBLIC WORK CONSTRUCTION, AS WELL AS OTHER SECTIONS.

23. FAILURE TO COMPLY WITH ANY OF THE ABOVE MENTIONED, WILL BE ADEQUATE CAUSE TO CEASE ALL WORK ON ANY CONSTRUCTION PROJECT. WORK WILL NOT RESUME UNTIL ALL REQUIREMENTS ARE ADDRESSED AND APPROVED BY CONSTRUCTION COORDINATION.

24. ALL TRAFFIC CONTROL DEVICES SHALL BE KEPT IN NEW-CLEAN CONDITION, WASHING OF EQUIPMENT IS INCIDENTAL TO IT'S PLACEMENT AND MAINTENANCE.

25. TRAFFIC CONTROL STANDARDS APPLY ONLY WHERE THE CONSTRUCTION TRAFFIC CONTROL PLANS ARE NOT SPECIFIC.

△3 26. ADVANCE WARNING SIGNS SHALL BE 36"x36" MIN. WITH SUPER ENGINEERING GRADE SHEETING OR BETTER. MOUNTING HEIGHT AT TOP OF SIGN SHALL BE THE SAME AS FOR A 48" SIGN AS INDICATED IN THE M.U.T.C.D.

△4 27. CONTRACTOR SHALL MAINTAIN A GRAFFITI-FREE WORKSITE. ALL GRAFFITI SHALL BE PROMPTLY REMOVED FROM ALL EQUIPTMENT, BOTH PERMANENT AND TEMPORARY.

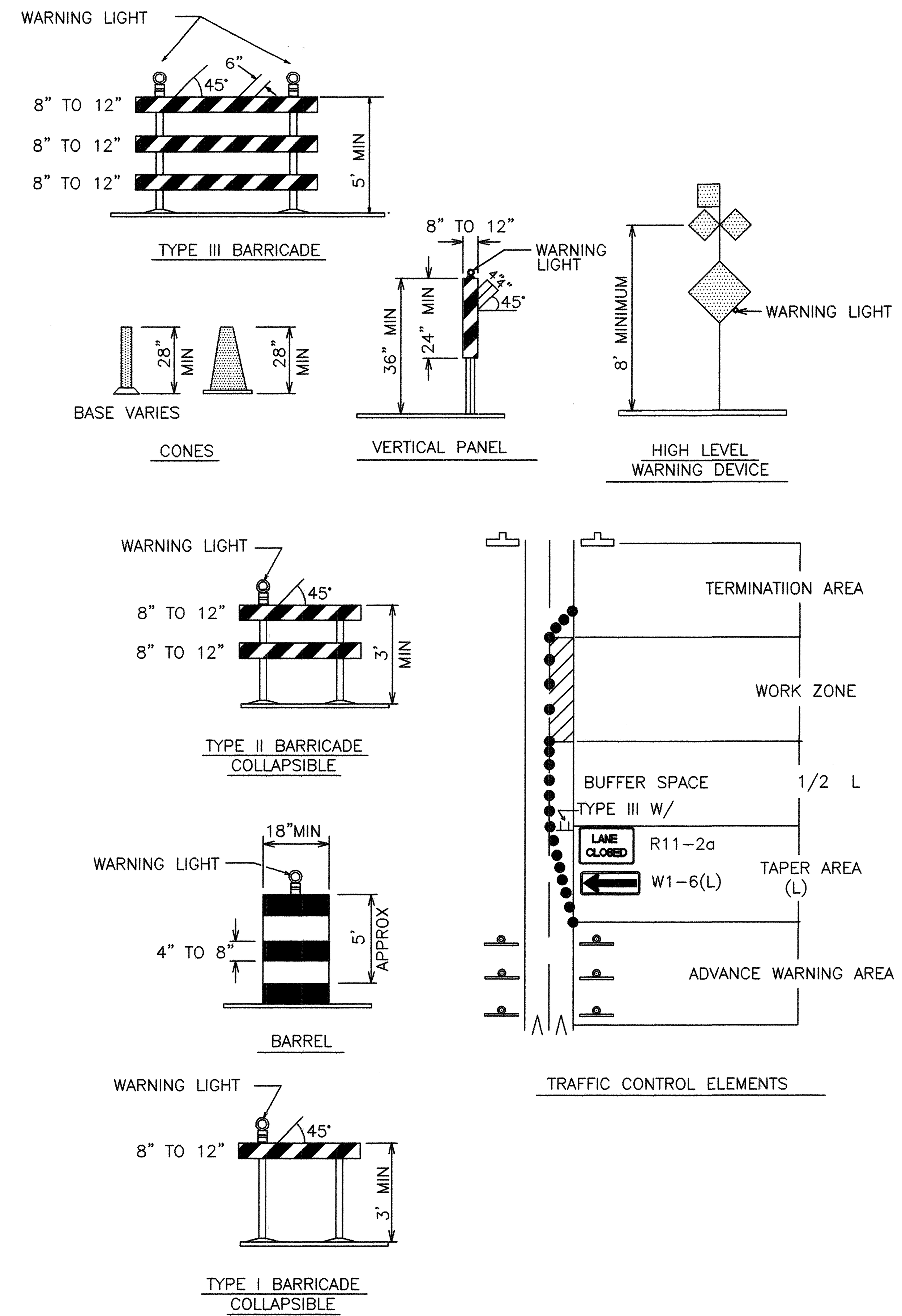

LEGEND

- WORK AREA
- BARRICADE – TYPE I, TYPE II, OR BARREL
- BARRICADE – TYPE III
- VERTICAL PANEL
- WARNING SIGN
- D — DISTANCE BETWEEN SIGNS – A DISTANCE MEASURED IN FEET EQUAL TO A VALUE OF TEN TIMES THE SPEED LIMIT OF THE STREET
- FLAGMAN POSITION
- S — SPACING BETWEEN BARRICADES – A DISTANCE MEASURED IN FEET EQUAL TO THE STREET LIMIT OF THE STREET
- L — TAPER LENGTH – SEE CHART BELOW

THE TANGENT LENGTH IS EQUAL TO THE TAPER LENGTH FOR A GIVEN STREET.

TAPER REQUIREMENT

SPEED LIMIT (MPH)	TAPER LENGTH(L) (FEET)			MINIMUM NUMBER OF DEVICES FOR TAPER	MAXIMUM DEVICE SPACING IN FEET	
	10' LANE	11' LANE	12' LANE		ALONG TAPER	AFTER TAPER
20	70	75	80	5	20	20
25	105	115	125	6	25	25
30	150	165	180	7	30	30
35	205	225	245	8	35	35
40	270	295	320	9	40	40
45	450	495	540	13	45	45
50	500	550	600	13	50	50
55	550	605	660	13	55	55

RECOMMENDED SIGN SPACING(D) FOR ADVANCE WARNING SIGN SERIES

SPEED MILES PER HOUR	MINIMUM DISTANCE IN FEET BETWEEN SIGNS	FROM LAST SIGN TO TAPER
0-20	10 X SPEED LIMIT	10 X SPEED LIMIT
25-30	10 X SPEED LIMIT	10 X SPEED LIMIT
30-35	10 X SPEED LIMIT	10 X SPEED LIMIT
40-45	10 X SPEED LIMIT	10 X SPEED LIMIT
50-60	10 X SPEED LIMIT	10 X SPEED LIMIT

TAPER CRITERIA

TYPE OF TAPER	TAPER LENGTH
UPSTREAM TAPER:	
MERGING TAPER	L MINIMUM
SHIFTING TAPER	1/2 L MINIMUM
SHOULDER TAPER	1/2 L MINIMUM
TWO-WAY TRAFFIC TAPER	100 FEET MAXIMUM
DOWNSTREAM TAPERS	100 FEET PER LANE

TAPER LENGTH COMPUTATION

SPEED LIMIT	
40 MPH OR LESS	$L = \frac{WS^2}{60}$
40 MPH OR GREATER	$L = W \times S$

L = TAPER LENGTH
W = WIDTH OF OFFSET IN FEET
S = POSTED SPEED OR OFF-PEAK 85-PERCENTILE SPEED IN MPH

SIGN FACE DETAILS

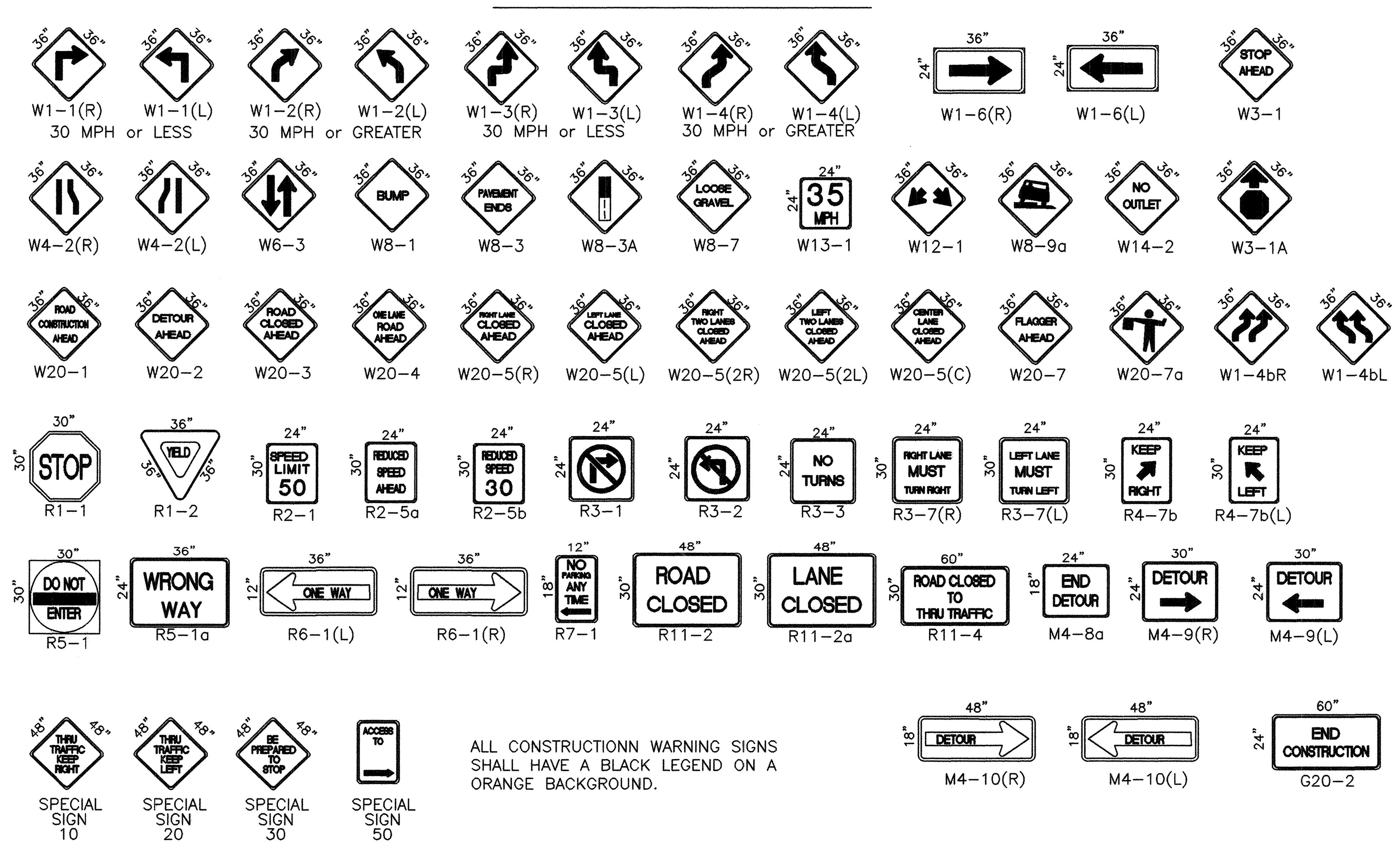

ALL CONSTRUCTIONN WARNING SIGNS SHALL HAVE A BLACK LEGEND ON A ORANGE BACKGROUND.

AS-BUILT INFORMATION
CONTRACTOR TRIAD
WORK STAKED BY ALS, INC DATE 98
INSPECTOR'S ACCEPTANCE BY DATE
FIELD VERIFICATION BY ALS, INC DATE 98
DRAWINGS CORRECTED BY ALS, INC DATE 6/98
MICRO-FILM INFORMATION
RECORDED BY DATE
NO.

BENCH MARKS

SURVEY INFORMATION
FIELD NOTES

ENGINEER'S SEAL
FRED C. ARFMAN STATE OF NEW MEXICO 7322 REGISTERED PROFESSIONAL ENGINEER 02-25-98

NO.	DATE	REMARKS	BY
△4	9/25/97	ADD NOTE NO. 27	J.D.L.
△3	9/24/97	REVISED NOTE NO. 26	J.D.L.
△2	9/24/97	REVISED NOTE NO. 19	J.D.L.
△1	9/24/97	REVISED NOTE NO. 11	J.D.L.

REVISIONS

DESIGN
DESIGNED BY BOHANNAN HUSTON DATE 5-97
DRAWN BY BOHANNAN HUSTON DATE 5-97
CHECKED BY BOHANNAN HUSTON DATE 5-97

ISAACSON & ARFMAN, P.A.
Consulting Engineering Associates
128 Monroe Street N.E.
Albuquerque New Mexico
878SDTF1.DWGems 02/20/98

CITY OF ALBUQUERQUE
PUBLIC WORKS DEPARTMENT
ENGINEERING GROUP

TITLE: **ROLLING HILLS UNIT ONE SUBDIVISION TRAFFIC CONTROL SIGNING AND CONSTRUCTION TRAFFIC CONTROL STANDARDS**

Design Review Committee — APPROVED MAR 30 DESIGN REVIEW COMMITTEE
City Engineer Approval
Last Design Update — Mo./Day/Yr. Mo./Day/Yr.

City Project No. **5379.93** | Zone Map No. **M-10** | Sheet **5** Of **6**

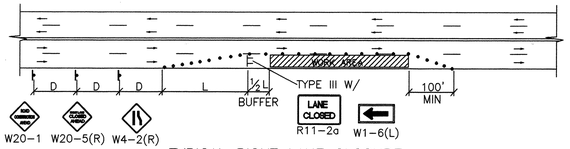

TYPICAL RIGHT LANE CLOSURE

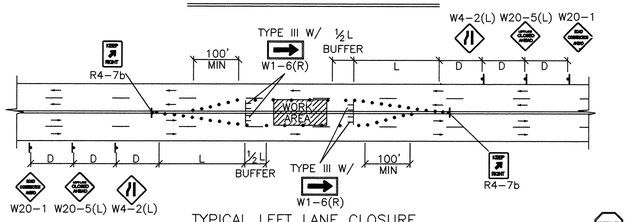

TYPICAL LEFT LANE CLOSURE

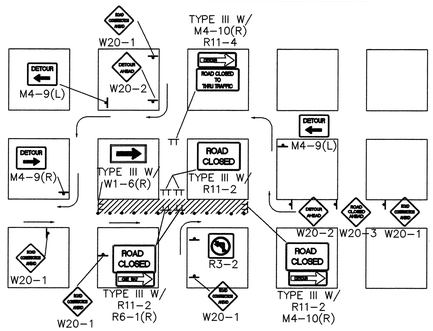

TYPICAL ONE DIRECTION DETOUR

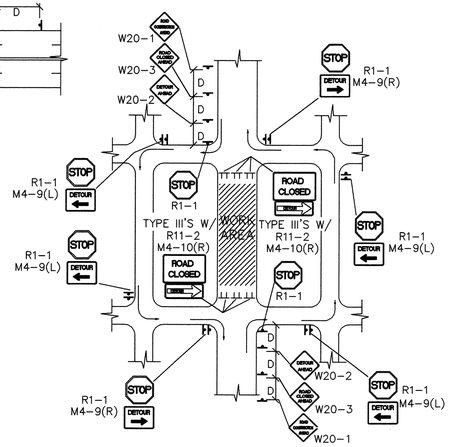

TYPICAL STREET CLOSURE

NOTE: (R1-1) BASED ON FIELD CONDITIONS.

NOTE:
MAY REQUIRE LEFT LANE CLOSURE DEPENDING ON FIELD CONDITIONS.

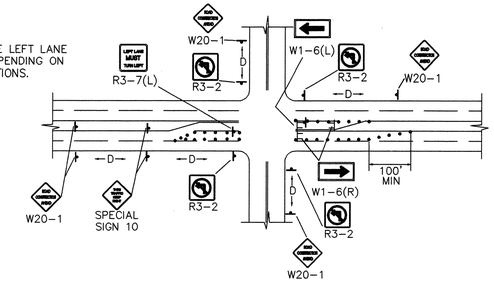

TYPICAL LANE CLOSURE AT INTERSECTION

NOTE: DEPENDING ON WORK ZONE LOCATION.

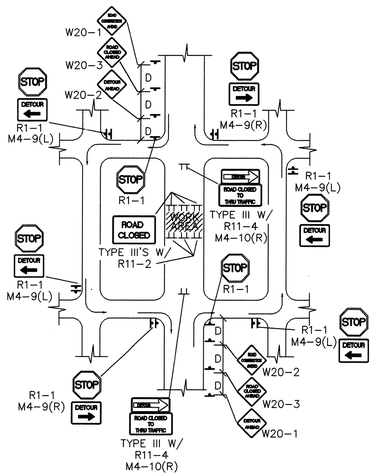

TYPICAL MID-BLOCK CLOSURE

NOTE: (R1-1) BASED ON FIELD CONDITIONS.

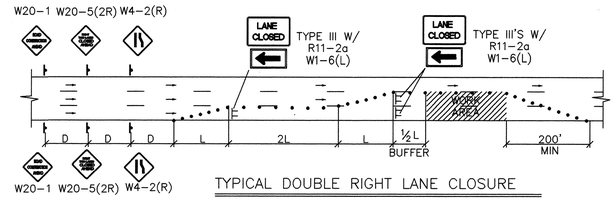

TYPICAL DOUBLE RIGHT LANE CLOSURE

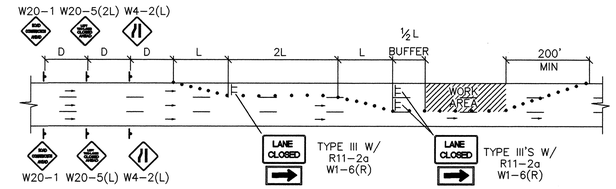

TYPICAL DOUBLE LEFT LANE CLOSURE

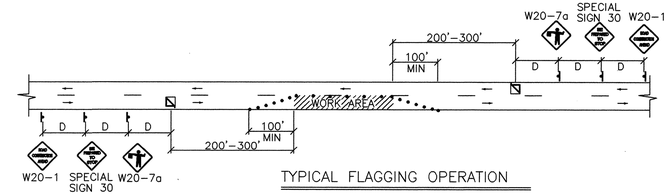

TYPICAL FLAGGING OPERATION

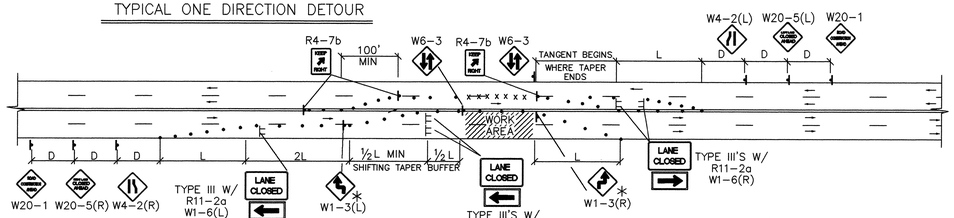

TYPICAL TRAFFIC SPLIT-(PAINTED MEDIAN)

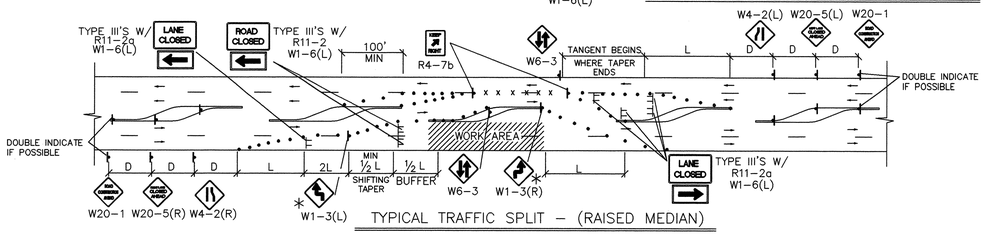

TYPICAL TRAFFIC SPLIT – (RAISED MEDIAN)

TRAFFIC SPLIT NOTES:

1. THE OFFSET DISTANCE MUST BE CALCULATED IN ALL SHIFTING TAPERS. THE OFFSET DISTANCES SHALL INCLUDE LANE WIDTHS PLUS MEDIAN WIDTHS.
2. 1/2 L IS THE MINIMUM DISTANCE FOR SHIFTING TAPERS.
3. REVERSE CURVES MAY BE IMPLEMENTED. ALL CURVE DATA SHALL BE CALCULATED.
4. MEDIAN REMOVAL SHALL BE REQUIRED IF 1/2 L OR REVERSE CURVE IS NOT SUFFICIENT. MEDIAN REMOVAL SHALL TAKE PLACE BEFORE SPLITS.
5. REDUCED SPEED MAY BE CONSIDERED.
6. ✳ USE W1-3 FOR 30 MPH OR LESS, W1-4 FOR SPEED 35 MPH OR GREATER.

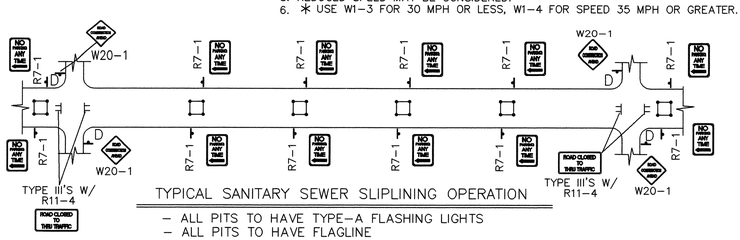

TYPICAL SANITARY SEWER SLIPLINING OPERATION

– ALL PITS TO HAVE TYPE-A FLASHING LIGHTS
– ALL PITS TO HAVE FLAGLINE

GENERAL NOTE:

ALL CONSTRUCTION WARNING SIGNS SHALL HAVE A BLACK LEGEND ON A ORANGE BACKGROUND.

⚠ ALL ADVANCE WARNING SIGNS SHALL BE A MINIMUM OF 36" THIRTY SIX INCHES BY 36" THIRTY SIX INCHES IN SIZE AND SHALL HAVE ONE WARNING LIGHT.

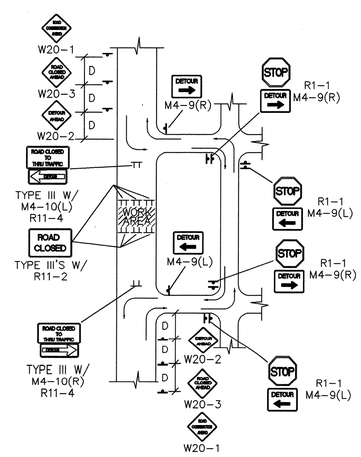

TYPICAL STREET CLOSURE

NOTE: (R1-1) BASED ON FIELD CONDITIONS.

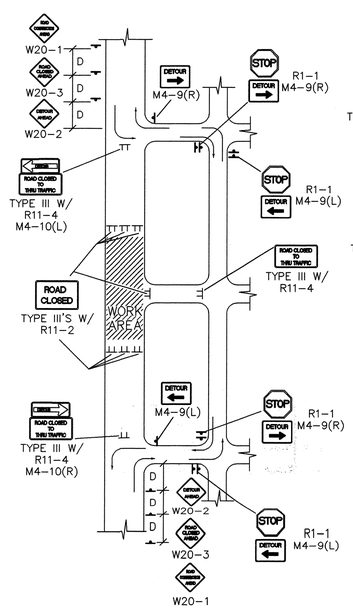

TYPICAL STREET CLOSURE

NOTE: (R1-1) BASED ON FIELD CONDITIONS.

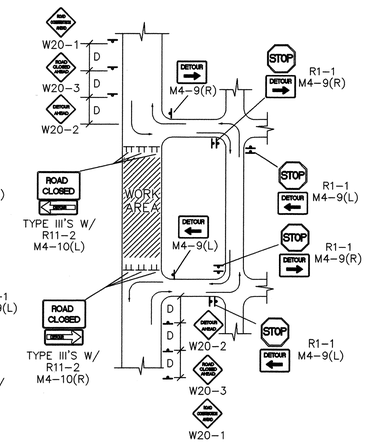

TYPICAL STREET CLOSURE

NOTE: (R1-1) BASED ON FIELD CONDITIONS.

AS-BUILT INFORMATION
CONTRACTOR TRIND
WORK STAKED BY ALS, INC DATE 98
INSPECTOR'S ACCEPTANCE BY DATE
FIELD VERIFICATION BY ALS, INC DATE 98
DRAWINGS CORRECTED BY ALS, INC DATE 98
MICRO-FILM INFORMATION
RECORDED BY DATE
NO.

BENCH MARKS

SURVEY INFORMATION
FIELD NOTES

ENGINEER'S SEAL
FRED C. ARFMAN STATE OF NEW MEXICO 7321 REGISTERED PROFESSIONAL ENGINEER
02-25-98

NO.	DATE	REMARKS	BY
		REVISIONS	
1	9/24/97	REVISED GENERAL NOTE	J.D.L.

			DATE
DESIGN			
DESIGNED BY	BOHANNAN HUSTON		5-97
DRAWN BY	BOHANNAN HUSTON		5-97
CHECKED BY	BOHANNAN HUSTON		5-97

ISAACSON & ARFMAN, P.A.
Consulting Engineering Associates
128 Monroe Street N.E.
Albuquerque New Mexico
878SDTF2.DWGems 02/20/98

CITY OF ALBUQUERQUE
PUBLIC WORKS DEPARTMENT
ENGINEERING GROUP

TITLE: ROLLING HILLS UNIT ONE SUBDIVISION
TYPICAL TRAFFIC CONTROL
& SIGNING EXAMPLES (REF MUTCD)

Design Review Committee: APPROVED MAR 30 1998 DESIGN REVIEW COMMITTEE
City Engineer Approval
Last Design Update | Mo./Day/Yr. | Mo./Day/Yr.

City Project No. 5379.93 | Zone Map No. M-10 | Sheet 6 Of 6