CITY OF
Albuquerque

VILLA HERMOSA
INFRASTRUCTURE IMPROVEMENTS
UTILITIES AND PAVEMENT

INDEX OF DRAWINGS

SHEET	TITLE
1	TITLE SHEET, INDEX, GENERAL NOTES, LEGEND, AND ABBREVIATIONS
2	PLAT
3	COORS BOULEVARD LEFT TURN LANE EXTENSION
4	VILLA HERMOSA PUBLIC INFRASTRUCTURE SANITARY SEWER AND STORM DRAIN – PLAN AND PROFILE
5	VILLA HERMOSA PUBLIC INFRASTRUCTURE WATER – PLAN AND PROFILE
6	VILLA HERMOSA PUBLIC INFRASTRUCTURE WATER – PLAN AND PROFILE
7	VILLA HERMOSA OURAY ROAD IMPROVEMENTS △

APPROVAL OF AS BUILT DRAWINGS
CHIEF CONSTRUCTION ENGINEER
DATE 5-27-99

AS BUILT
DATE 6-2-98

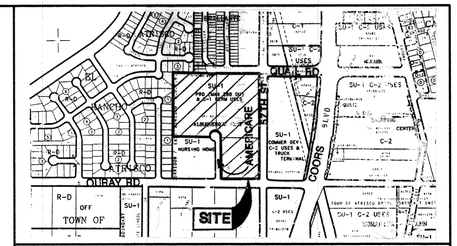

VICINITY MAP H-11

GENERAL NOTES

1. AN EXCAVATION/CONSTRUCTION PERMIT WILL BE REQUIRED BEFORE BEGINNING ANY WORK WITHIN CITY RIGHT-OF-WAY.
2. ALL WORK DETAILED ON THESE PLANS TO BE PERFORMED, EXCEPT AS OTHERWSE STATED OR PROVIDED HERON, SHALL BE CONSTRUCTED IN ACCORDANCE WITH CITY OF ALBUQUERQUE STANDARD SPECIFICATIONS FOR PUBLIC WORKS CONSTRUCTION, 1986 EDITION AS REVISED THROUGH UPDATE #6.
3. FIVE WORKING DAYS PRIOR TO ANY EXCAVATION, CONTRACTOR MUST CONTACT LINE LOCATING SERVICE, (260-1990) FOR LOCATION OF EXISTING UTILITIES.
4. PRIOR TO CONSTRUCTION, THE CONTRACTOR SHALL EXCAVATE AND VERIFY THE HORIZONTAL AND VERTICAL LOCATIONS OF ALL PERTINENT EXISTING UTILITIES. SHOULD A CONFLICT EXIST, THE CONTRACTOR SHALL NOTIFY THE ENGINEER SO THAT THE CONFLICT CAN BE RESOLVED WITH A MINIMUM AMOUNT OF DELAY.
5. TWO WORKING DAYS PRIOR TO BEGINNING CONSTRUCTION THE CONTRACTOR SHALL SUBMIT TO THE CONSTRUCTION COORDINATION DIVISION A DETAILED CONSTRUCTION SCHEDULE. TWO WORKING DAYS PRIOR TO CONSTRUCTION, THE CONTRACTOR SHALL OBTAIN A BARRICADING PERMIT FROM THE CONSTRUCTION COORDINATION DIVISION. CONTRACTOR SHALL NOTIFY BARRICADE ENGINEER (765-2551) PRIOR TO OCCUPYING PUBLIC RIGHT-OF-WAY. SEE SECTION 19 OF THE SPECIFICATIONS.
6. ALL STREET STRIPING ALTERED OR DESTROYED SHALL BE REPLACED WITH PLASTIC REFLECTORIZED PAVEMENT MARKINGS BY CONTRACTOR TO SAME LOCATION AS EXISTING, OR AS INDICATED BY THIS PLAN SET.
7. CONTRACTOR SHALL COORDINATE WITH WATER SYSTEMS DIVISION (857-8200) FIVE WORKING DAYS IN ADVANCE OF ANY WORK THAT MAY AFFECT EXISTING PUBLIC WATER OR SEWER UTILITIES. EXISTING VALVES TO BE OPERATED BY CITY PERSONNEL ONLY. CONTRACTOR SHALL CONTACT THE WATER SYSTEMS DIVISION.
8. CONTRACTOR SHALL RECORD DATA ON ALL UTILITY LINES AND ACCESSORIES AS REQUIRED BY THE CITY OF ALBUQUERQUE FOR THE PREPARATION OF "AS CONSTRUCTED" DRAWINGS. CONTRACTOR SHALL NOT COVER UTILITY LINES AND ACCESSORIES UNTIL ALL DATA HAS BEEN RECORDED.
9. CONTRACTOR SHALL NOTIFY THE ENGINEER NOT LESS THAN SEVEN (7) DAYS PRIOR TO STARTING WORK IN ORDER THAT THE CITY SURVEYOR MAY TAKE NECESSARY MEASURES TO INSURE THE PRESERVATION OF SURVEY MONUMENTS. CONTRACTOR SHALL NOT DISTURB PERMANENT SURVEY MONUMENTS WITHOUT THE CONSENT OF THE CITY SURVEYOR AND SHALL NOTIFY THE CITY SURVEYOR AND BEAR THE EXPENSE OF REPLACING ANY THAT MAY BE DISTURBED.
10. ANY WORK AFFECTING AN ARTERIAL ROADWAY REQUIRES TWENTY FOUR (24) HOUR CONSTRUCTION.
11. EXISTING PUBLIC OR PRIVATE IMPROVEMENTS WHICH ARE DAMAGED OR DISPLACED BY THE CONTRACTOR SHALL BE REPAIRED OR REPLACED BY THE CONTRACTOR AT THE CONTRACTOR'S OWN EXPENSE. REPAIRS SHALL BE APPROVED BY THE OWNER PRIOR TO CONSTRUCTION OF THE REPAIRS. REPAIRS SHALL BE ACCEPTED BY THE OWNER PRIOR TO FINAL PAYMENT.

LEGEND

DESCRIPTION	EXISTING	NEW
ASPHALT		
CURB AND GUTTER		
PROPERTY LINE		
CONSTRUCTION BASE LINE		1+00

ABBREVIATIONS

LF	= LINEAR FEET	STA	= STATION
L	= LEFT	RAD.	= RADIUS
R	= RIGHT	TYP.	= TYPICAL
TC	= TOP OF CURB	PC	= POINT OF CURVATURE
FL	= FLOWLINE	PT	= POINT OF TANGENT
EXIST	= EXISTING	TA	= TOP OF ASPHALT

CHAVEZ • GRIEVES
CONSULTING ENGINEERS, INC.
5639 JEFFERSON STREET N.E. • ALBUQUERQUE, NEW MEXICO 87109
PHONE (505) 344-4080 • FAX (505) 343-8759

REV.	SHEETS	CITY ENGINEER	DATE	USER DEPARTMENT	DATE	USER DEPARTMENT	DATE
△	7	Billy J. Arnholz	6-2-98		6-2-98		6/29/98

ENGINEER'S STAMP & SIGNATURE

JOE P. KELLEY NEW MEXICO 9996 REGISTERED PROFESSIONAL ENGINEER
7/29/97

APPROVALS	ENGINEER	DATE
DRC Chairman	Billy J. Arnholz	8-26-97
Transportation		8-5-97
Water/Wastewater	R.W. Lane	7-29-97
Hydrology	B.J. Morgan	8/1/97
C.I.P.		
Constr. Mngmt.		

****
APPROVED FOR CONSTRUCTION
City Engineer — Date 12/16/97

City Project No. 559481

Sheet 1 Of 7

JOB NO.: D06-113-5195
REF: W-CD-PW-96
ENG/TECH: JW/JM
REV: (06-03-97)

PLAT OF TRACTS A-1 & C-1
ALBUQUERQUE WEST
SITUATE WITHIN PROJECTED
SECTION 11, T. 10 N., R. 2 E., N.M.P.M.
ALBUQUERQUE, NEW MEXICO
MAY 1996
SHEET 2 OF 2

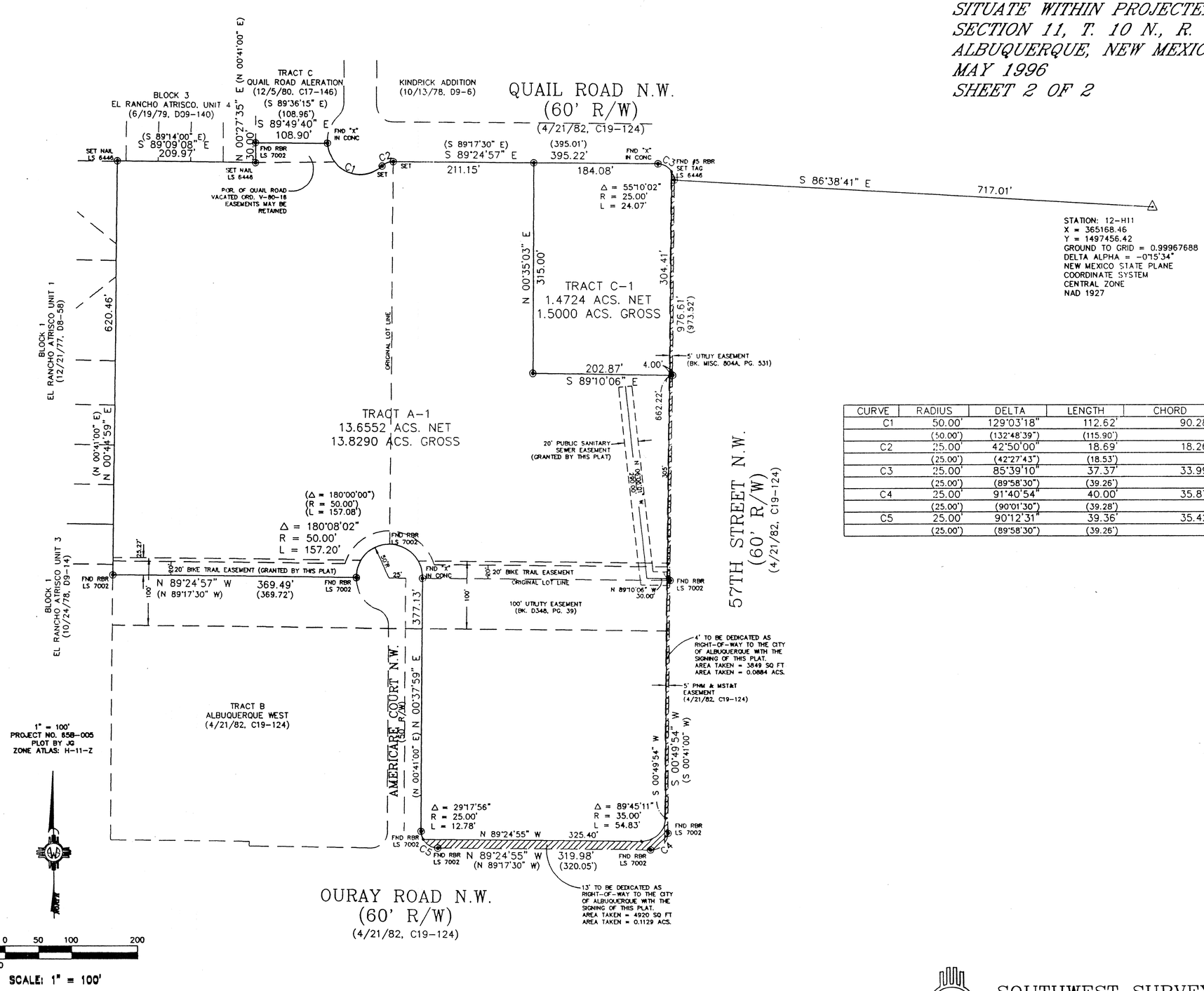

CURVE	RADIUS	DELTA	LENGTH	CHORD	BEARING
C1	50.00'	129°03'18"	112.62'	90.28'	N 67°43'18" W
	(50.00')	(132°48'39")	(115.90')		
C2	25.00'	42°50'00"	18.69'	18.26'	S 69°10'03" W
	(25.00')	(42°27'43")	(18.53')		
C3	25.00'	85°39'10"	37.37'	33.99'	S 44°28'03" E
	(25.00')	(89°58'30")	(39.26')		
C4	25.00'	91°40'54"	40.00'	35.87'	N 45°41'21" E
	(25.00')	(90°01'30")	(39.28')		
C5	25.00'	90°12'31"	39.36'	35.42'	S 43°54'17" E
	(25.00')	(89°58'30")	(39.26')		

SOUTHWEST SURVEYING CO., INC.
333 LOMAS BLVD., N.E.
ALBUQUERQUE, NEW MEXICO
87102
PHONE: (505) 247-4444
FAX: (505) 242-8069

CPN 559481

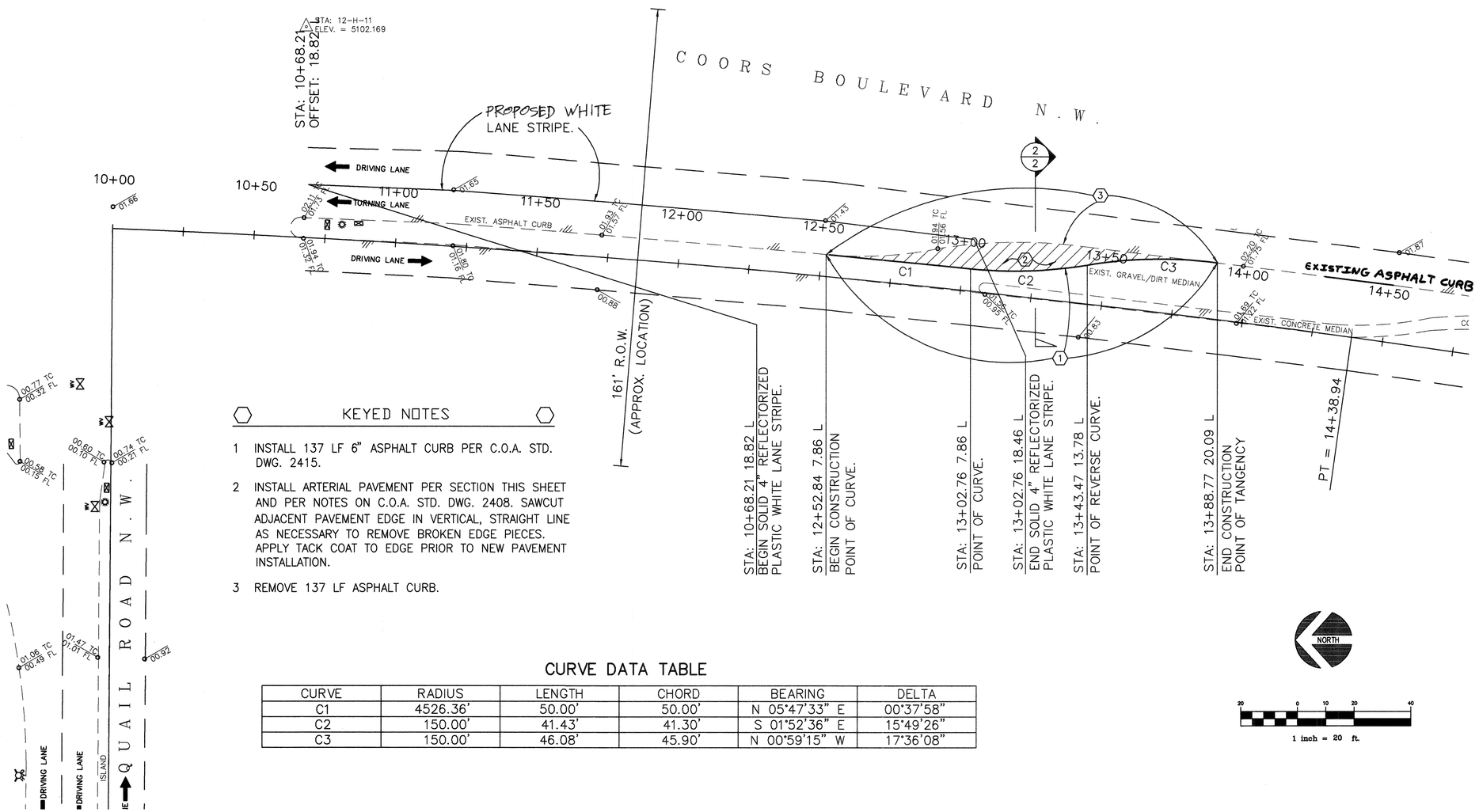

KEYED NOTES

1 INSTALL 137 LF 6" ASPHALT CURB PER C.O.A. STD. DWG. 2415.

2 INSTALL ARTERIAL PAVEMENT PER SECTION THIS SHEET AND PER NOTES ON C.O.A. STD. DWG. 2408. SAWCUT ADJACENT PAVEMENT EDGE IN VERTICAL, STRAIGHT LINE AS NECESSARY TO REMOVE BROKEN EDGE PIECES. APPLY TACK COAT TO EDGE PRIOR TO NEW PAVEMENT INSTALLATION.

3 REMOVE 137 LF ASPHALT CURB.

CURVE DATA TABLE

CURVE	RADIUS	LENGTH	CHORD	BEARING	DELTA
C1	4526.36'	50.00'	50.00'	N 05°47'33" E	00°37'58"
C2	150.00'	41.43'	41.30'	S 01°52'36" E	15°49'26"
C3	150.00'	46.08'	45.90'	N 00°59'15" W	17°36'08"

NORTH

1 inch = 20 ft.

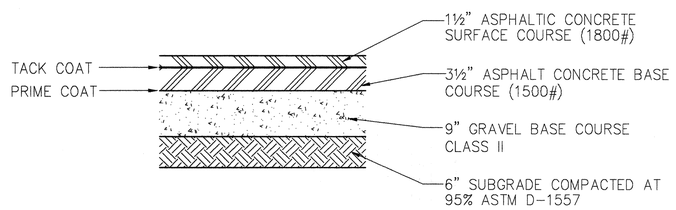

1/2 ARTERIAL PAVEMENT SECTION (MATCH EXISTING SECTION) N.T.S.

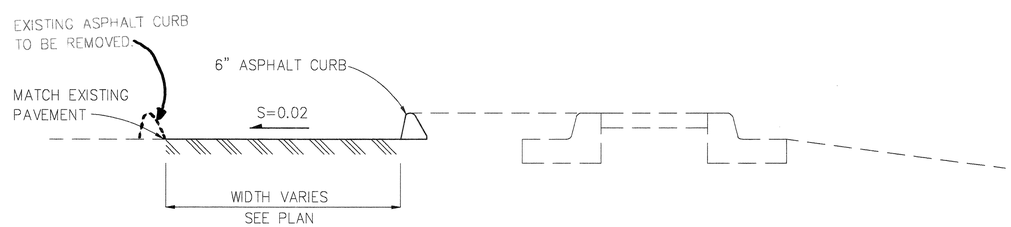

2/2 MEDIAN SECTION N.T.S.

COA INSPECTOR: RAY BACA

AS BUILT INFORMATION

CONTRACTOR	Romero Excavating
WORK STAKED BY	Walker Engineering DATE 2/98
INSPECTOR'S ACCEPTANCE BY	Ray Baca DATE 6/98
FIELD VERIFICATION BY	Walter Lindrith DATE 6/98
DRAWINGS CORRECTED BY	Austin-Incabo DATE 6/98
MICRO-FILM INFORMATION	
RECORDED BY	DATE
NO.	

BENCH MARKS

A 3-1/4" ALUMINUM CAP STAMPED "12-H11, 1989" SET FLUSH IN THE TOP OF CURB LOCATED 64.2' SOUTH OF CENTERLINE OF QUAIL RD., IN A TRAFFIC ISLAND IN THE SOUTHEAST QUADRANT OF COORS BLVD. AND QUAIL RD.	ELEV. = 5102.169 FT.

SURVEY INFORMATION

FIELD NOTES

NO.	BY	DATE
	SOUTHWEST SURVEYING	08/96
	CONSULTING SURVEYOR	

ENGINEER'S SEAL

JOE P. KELLEY, NEW MEXICO, 9996, REGISTERED PROFESSIONAL ENGINEER, 6/9/97

NO.	DATE	REMARKS	BY
		REVISIONS	

DESIGN

DESIGNED	J. A. WOLFENBARGER	DATE 05/97
DRAWN BY	J. L. MARTINEZ	DATE 05/97
CHECKED BY	J. P. KELLEY	DATE 05/97

AS BUILT DATE 6-2-98

CITY OF ALBUQUERQUE
PUBLIC WORKS DEPARTMENT
ENGINEERING DEVELOPMENT GROUP

TITLE: COORS BOULEVARD LEFT TURN LANE EXTENSION

APPROVED AUG 26 1997 DESIGN REVIEW COMMITTEE

City Project No. 559481 | Zone Map No. H-11 | Sheet 3 Of 7

JOB NO.: D06-113-5195
FILE: AWA-C07/DWG
ENG: TEDH: (06-03-97)
REV: (06-03-97)

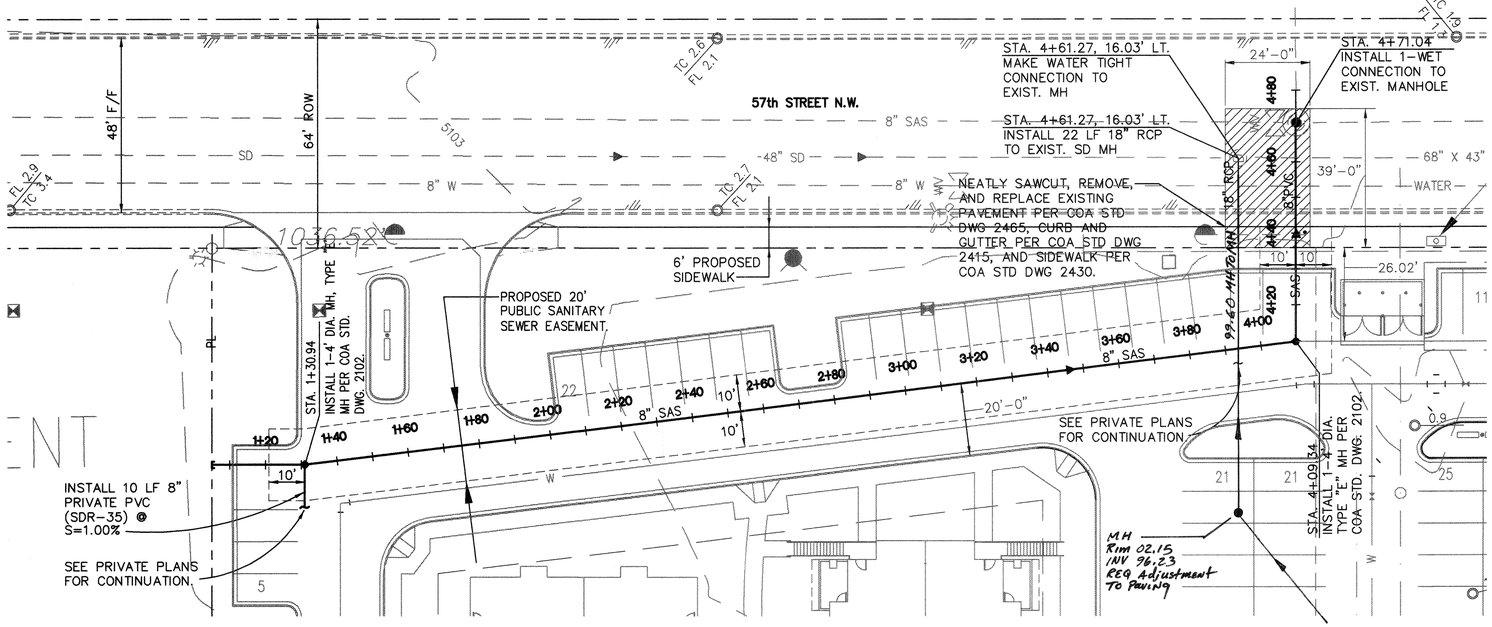

PLAN VIEW
AREA "A"

1 inch = 20 ft.

NORTH

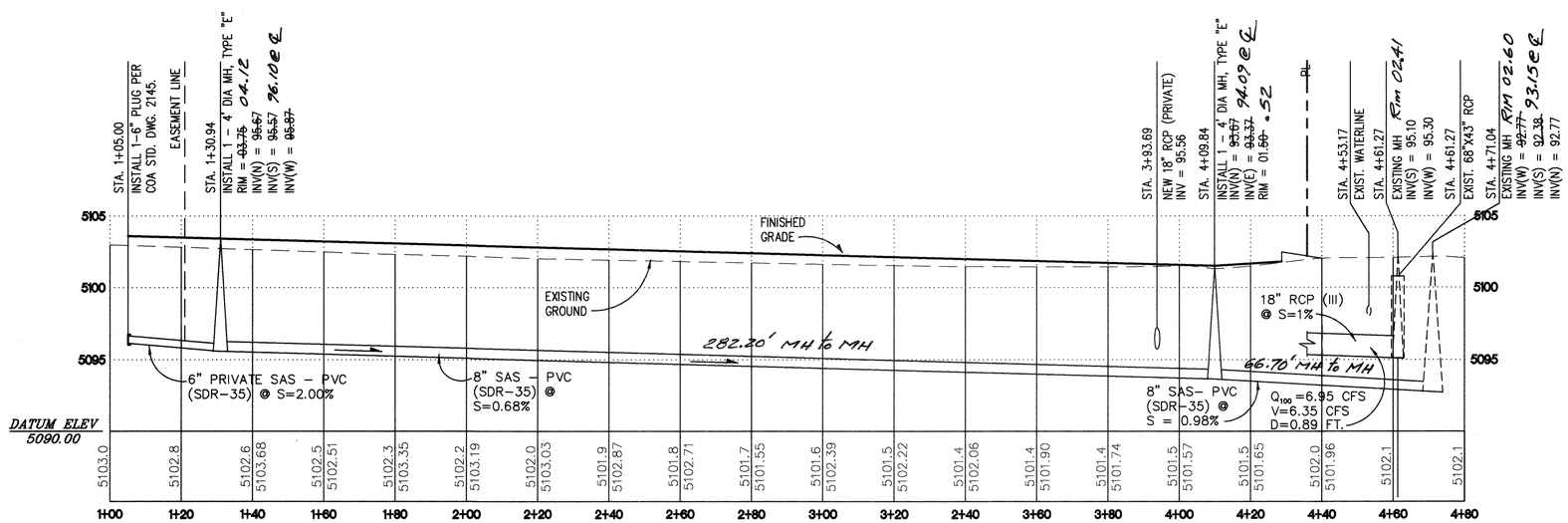

SANITARY SEWER PROFILE

SCALE:

HORIZ	1"=20'-0"
VERT	1"=5'-0"

KEY MAP

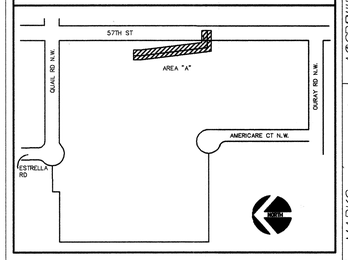

A & S BUILT INFORMATION

CONTRACTOR Romco Excavating

WORK STAKED BY Walker Surveying DATE

INSPECTOR ACCEPTANCE BY Walker Surveying DATE 6/2/98

FIELD VERIFICATION BY Walker Surveying DATE 6/2/98

DRAWINGS CORRECTED BY Walker Surveying DATE 6/2/98

MICRO-FILM INFORMATION

RECORDED BY DATE

NO.

BENCH MARKS

A 1-3/4" ALUMINUM DISK STAMPED "ACS BM, 9-H11" EPOXIED TO THE TOP OF THE CONCRETE BASE OF THE FIRST GALVANIZED STEEL POWER POLE EAST OF COORS ROAD, 0.1 MILE NORTH OF OURAY ROAD NW ON THE WEST SIDE OF THE POLE.
ELEV. = 5101.518 FT.

SURVEY INFORMATION

FIELD NOTES

NO.	BY	DATE
	SOUTHWEST SURVEYING	5/96
	CONSULTING SURVEYOR	

ENGINEER'S SEAL

JOSEPH L. DeFRONZO NEW MEXICO 12883 REGISTERED PROFESSIONAL ENGINEER
Joseph L. DeFronzo 6-2-98

JOE P. KELLEY NEW MEXICO 9996 REGISTERED PROFESSIONAL ENGINEER
6/19/97

AS BUILT
DATE 6-2-98

CERTIFICATION
THESE DRAWINGS HAVE BEEN REVISED IN ACCORDANCE WITH INFORMATION FURNISHED BY STEVE WALKER SURVEY TO REFLECT THE CONSTRUCTION AS ACTUALLY ACCOMPLISHED
Joseph L. DeFronzo 6/2/98
NAME DATE

REVISIONS

NO.	DATE	REMARKS	BY

DESIGN

DESIGNED	J. A. WOLFENBARGER	DATE	05-97
DRAWN BY	J. L. MARTINEZ	DATE	05-97
CHECKED BY	J. P. KELLEY	DATE	05-97

CHAVEZ • GRIEVES CONSULTING ENGINEERS, INC.
5639 JEFFERSON STREET N.E. • ALBUQUERQUE, NEW MEXICO 87109
PHONE (505) 344-4080 • FAX (505) 343-8759

CITY OF ALBUQUERQUE
PUBLIC WORKS DEPARTMENT
ENGINEERING DEVELOPMENT GROUP

VILLA HERMOSA PUBLIC INFRASTRUCTURE
SANITARY SEWER AND STORM DRAIN - PLAN AND PROFILE

Design Review Committee	City Engineer Approval	Last Design Update	No./Day/Yr.	No./Day/Yr.
APPROVED AUG 26 1997 DESIGN REVIEW COMMITTEE				

City Project No.	Zone Map No.	Sheet	Of
559481	H-11	4	17

JOB NO: D06-113-5195
FILE: VHC-PP.DWG
RWG: PROJECT.RWG
REV: (06-04-97)

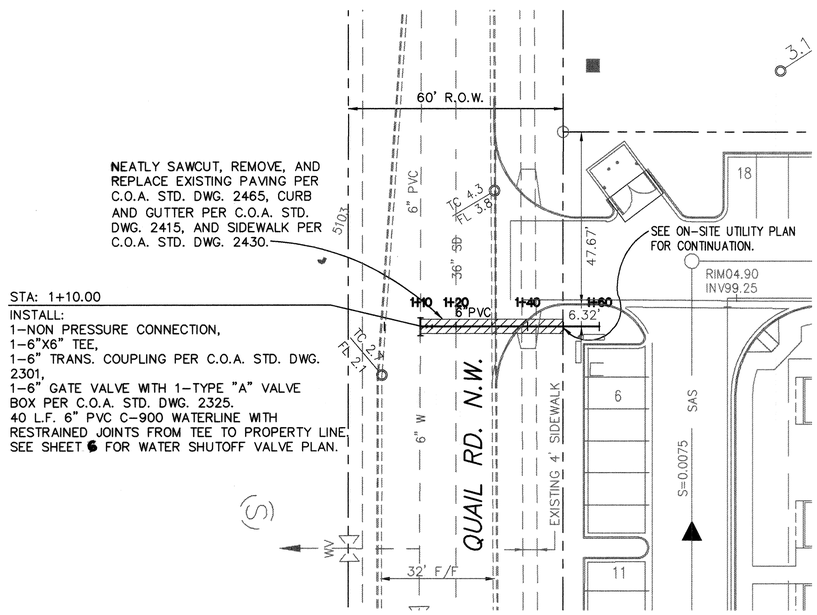

PLAN VIEW
AREA "B"

1 inch = 20 ft.

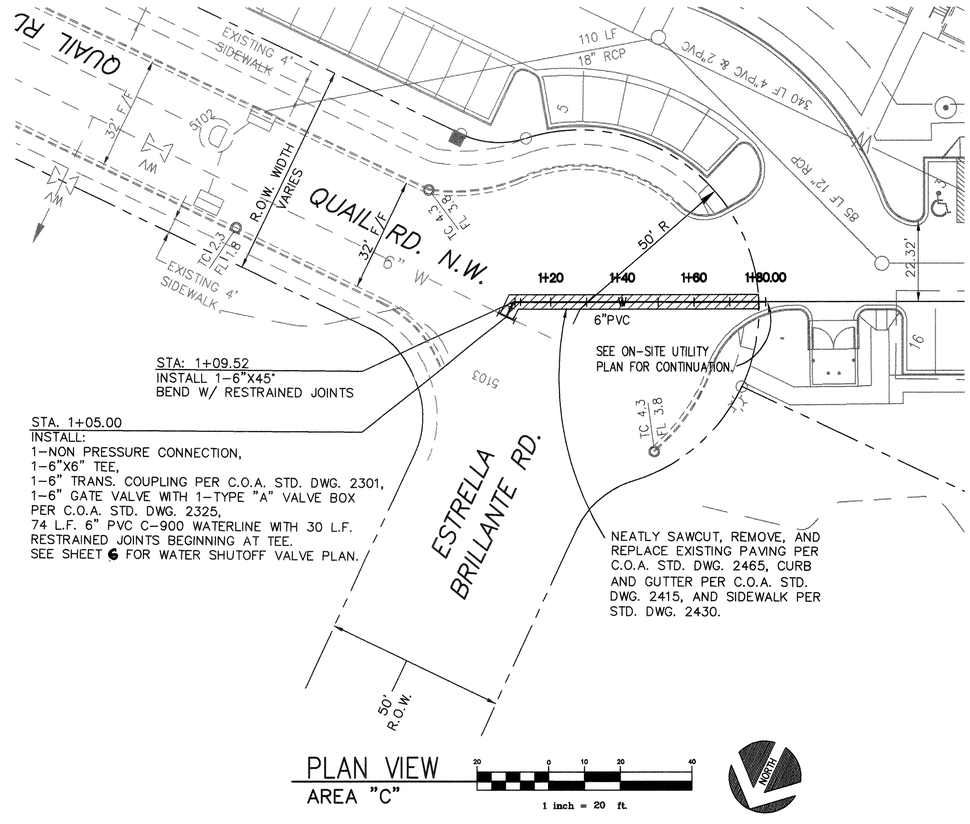

PLAN VIEW
AREA "C"

1 inch = 20 ft.

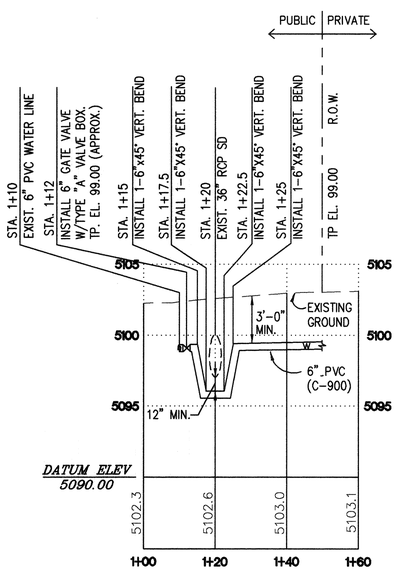

WATER PROFILE

SCALE:	
HORIZ	1"=20'-0"
VERT	1"=5'-0"

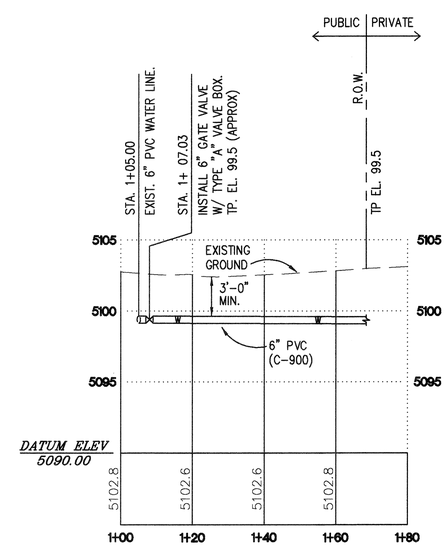

WATER PROFILE

KEY MAP

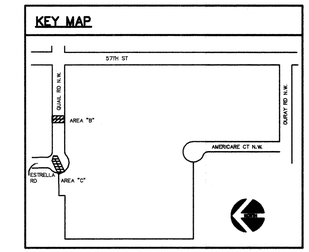

CONTRACTOR	
WORK STAKED BY	DATE
INSPECTORS ACCEPTANCE BY	DATE
FIELD VERIFICATION BY	DATE
DRAWINGS CORRECTED BY	DATE
MICRO-FILM INFORMATION	
RECORDED BY	DATE
NO.	

BENCH MARKS

A 1-3/4" ALUMINUM DISK STAMPED "ACS BM. 9-H11" EPOXIED TO THE TOP OF THE CONCRETE BASE OF THE FIRST GALVANIZED STEEL POWER POLE EAST OF COORS ROAD, 0.1 MILE NORTH OF QUAY ROAD NW ON THE WEST SIDE OF THE POLE.
ELEV. = 5101.518 FT.

SURVEY INFORMATION

FIELD NOTES

NO.	BY	DATE
	SOUTHWEST SURVEYING	5/96
	CONSULTING SURVEYOR	

ENGINEER'S SEAL

JOE P. KELLEY
NEW MEXICO
9996
REGISTERED PROFESSIONAL ENGINEER
6/17/97

AS BUILT
DATE 6-2-98

NO.	DATE	REMARKS	BY

REVISIONS

DESIGN		
DESIGNED	J. A. WOLFENBARGER	DATE 05-97
DRAWN BY	J. L. MARTINEZ	DATE 05-97
CHECKED BY	J. P. KELLEY	DATE 05-97

CHAVEZ • GRIEVES
CONSULTING ENGINEERS, INC.
5639 JEFFERSON STREET N.E. • ALBUQUERQUE, NEW MEXICO 87109
PHONE (505) 344-4080 • FAX (505) 343-8759

CITY OF ALBUQUERQUE
PUBLIC WORKS DEPARTMENT
ENGINEERING DEVELOPMENT GROUP

TITLE: VILLA HERMOSA PUBLIC INFRASTRUCTURE
WATER – PLAN AND PROFILE

Design Review Committee	City Engineer Approval	Last Design Update	No./Day/Yr.	No./Day/Yr.
APPROVED AUG 26 1997 DESIGN REVIEW COMMITTEE				

City Project No.	Zone Map No.	Sheet	Of
559481	H-11	5	17

JOB NO: D06-113-5195
FILE: VHC-PP.DWG
ENG/TECH: JW/JM
REV: (06-04-97)

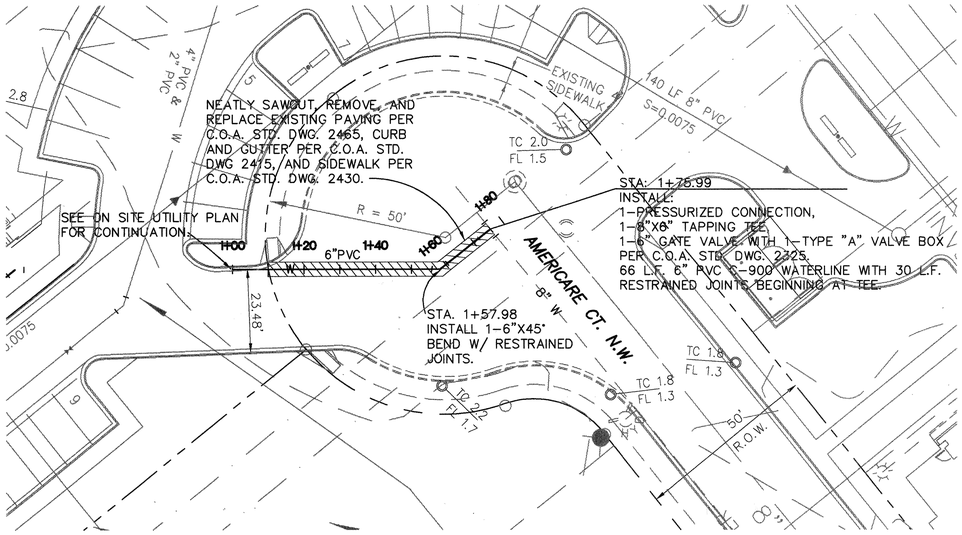

PLAN VIEW
AREA "D"

20 0 10 20 40
1 inch = 20 ft.

NORTH

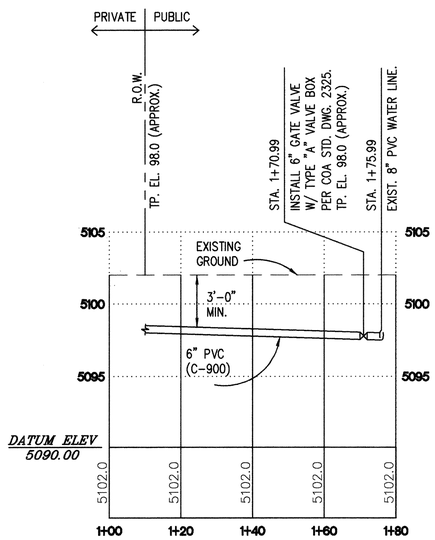

WATER PROFILE

WATER SHUTOFF REQUIREMENTS:
THE CONTRACTOR SHALL BE RESPONSIBLE FOR TIMING AND COORDINATION OF WATER SHUTOFF. AT LEAST FIVE (5) WORKING DAYS PRIOR TO CONSTRUCTION. CONTRACTOR SHALL CONTACT THE WATER SYSTEMS DIVISION, 857-8200, TO INITIATE IMPLEMENTATION OF THE NON-PRESSURIZED CONNECTION PLAN. IN ORDER TO COMPLETE THIS CONNECTION, THE FOLLOWING VALVES MUST BE CLOSED BY WATER SYSTEMS PERSONNEL.

FOR CONNECTION:
1- CLOSE VALVES "23", "24", AND "31", AS INDICATED.
2- CLOSE VALVES "22", "24" AS INDICATED.

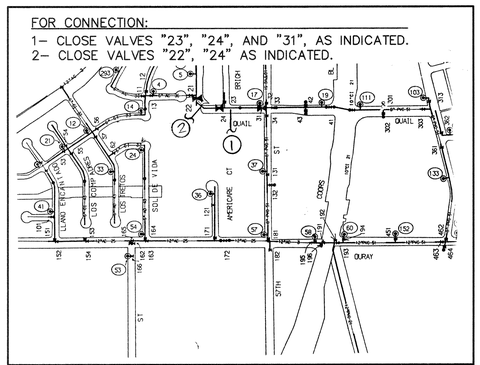

WATER VALVE SHUT-OFF PLAN H-11-Z

SCALE:	
HORIZ	1"=20'-0"
VERT	1"=5'-0"

KEY MAP

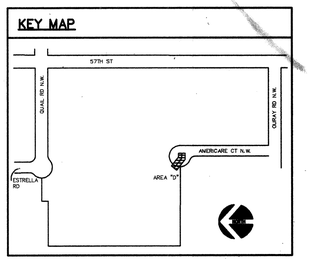

AS BUILT INFORMATION

BENCH MARKS

A 1-3/4" ALUMINUM DISK STAMPED "ACS BM. 9-H11" EPOXIED TO THE TOP OF THE CONCRETE BASE OF THE FIRST GALVANIZED STEEL POWER POLE EAST OF COORS ROAD, 0.1 MILE NORTH OF OURAY ROAD NW ON THE WEST SIDE OF THE POLE.
ELEV. = 5101.518 FT.

CONTRACTOR STAKED BY		DATE
INSPECTOR'S ACCEPTANCE BY		DATE
FIELD VERIFICATION BY		DATE
DRAWINGS CORRECTED BY		DATE

MICRO-FILM INFORMATION

RECORDED BY	DATE
NO.	

SURVEY INFORMATION

FIELD NOTES

NO.	BY	DATE
	SOUTHWEST SURVEYING	5/96
	CONSULTING SURVEYOR	

ENGINEER'S SEAL

JOE P. KELLEY NEW MEXICO 9966 REGISTERED PROFESSIONAL ENGINEER 6/19/97

NO.	DATE	REMARKS	BY

REVISIONS

DESIGNED	J. A. WOLFENBARGER	DATE 05-97
DRAWN BY	J. L. MARTINEZ	DATE 05-97
CHECKED BY	J. P. KELLEY	DATE 05-97

AS BUILT
DATE 6-2-98

CHAVEZ • GRIEVES
CONSULTING ENGINEERS, INC.
5639 JEFFERSON STREET N.E. • ALBUQUERQUE, NEW MEXICO 87109
PHONE (505) 344-4080 • FAX (505) 343-8759

CITY OF ALBUQUERQUE
PUBLIC WORKS DEPARTMENT
ENGINEERING DEVELOPMENT GROUP

TITLE: VILLA HERMOSA PUBLIC INFRASTRUCTURE
WATER - PLAN AND PROFILE

Design Review Committee	City Engineer Approval	Last Design Update	Mo./Day/Yr.	Mo./Day/Yr.
APPROVED AUG 26 1997 DESIGN REVIEW COMMITTEE				

City Project No.	Zone Map No.	Sheet	Of
559481	H-11	6	7

JOB NO.: D06-113-5195
FILE: VHC-PP.DWG
ENG/TECH: JW/JM
REV: (06-04-97)

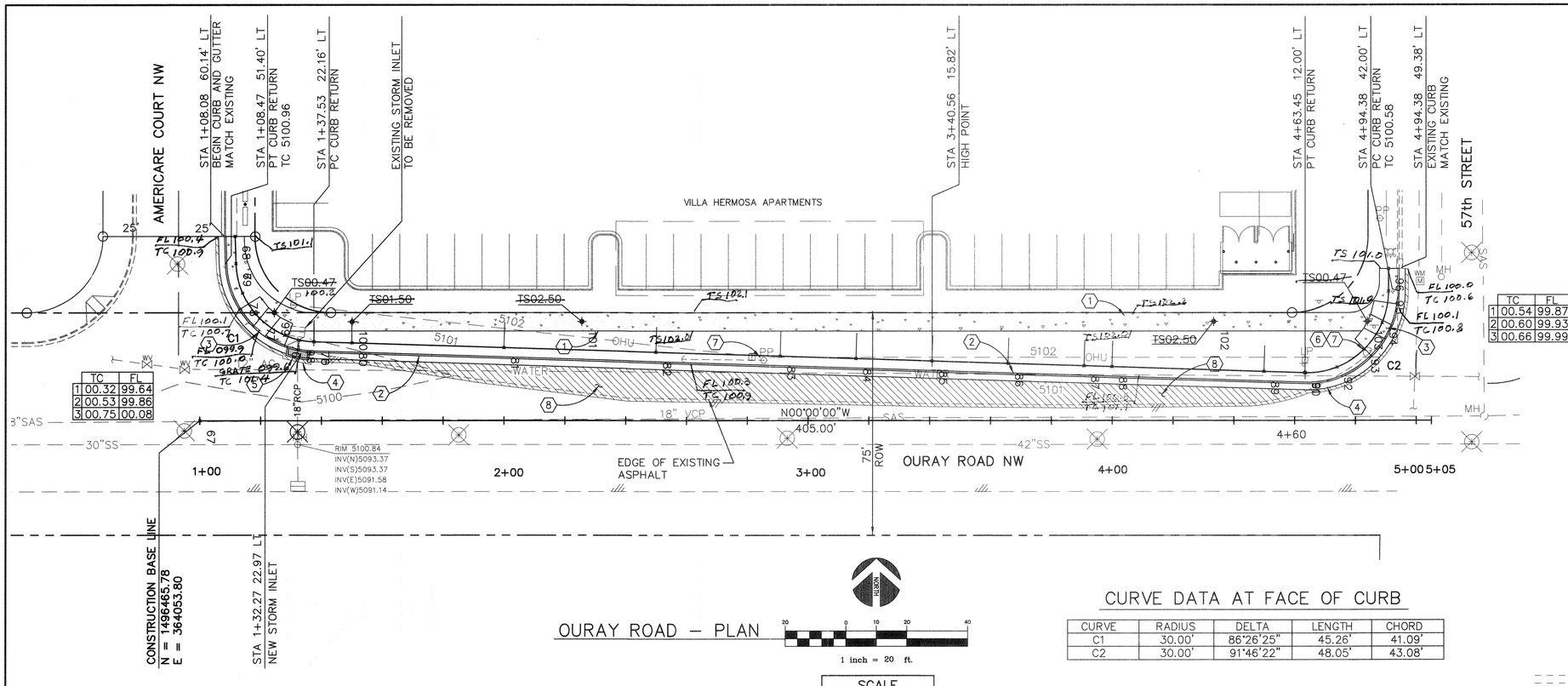

	TC	FL
1	00.32	99.64
2	00.53	99.86
3	00.75	00.08

	TC	FL
1	00.54	99.87
2	00.60	99.93
3	00.66	99.99

OURAY ROAD – PLAN

1 inch = 20 ft.

SCALE
HORIZ: 1"=20'
VERT: 1"=5'

CURVE DATA AT FACE OF CURB

CURVE	RADIUS	DELTA	LENGTH	CHORD
C1	30.00'	86°26'25"	45.26'	41.09'
C2	30.00'	91°46'22"	48.05'	43.08'

KEYED NOTES

1. INSTALL NEW 6' SIDEWALK PER COA STD DWG 2430.
2. INSTALL NEW STANDARD CURB AND GUTTER PER COA STD DWG 2415.
3. INSTALL NEW HANDICAP RAMP PER COA STD DWG 2441.
4. REMOVE 1' OF EXISTING ASPHALT PRIOR TO NEW CURB AND GUTTER, AND STORM DRAIN INLET INSTALLATION. TACK COAT EXISTING ASPHALT PRIOR TO ASPHALY LAYDOWN. SEE ASPHALT SECTION THIS SHEET.
5. INSTALL NEW STORM INLET PER COA STD DWG 2201. TIE–IN EXISTING 18" RCP TO NEW INLET SIMILAR TO COA STD DWG 2237.
6. SIDEWALK OBSTRUCTION SEE COA STD DWG 2431.
7. NEW CURB AND GUTTER 2' MINIMUM OFFSET FROM EXISTING POWER POLE.
8. INSTALL NEW ASPHALT PER DETAIL, THIS SHEET.

CONSTRUCTION NOTES

1. ALL NEW CONSTRUCTION MUST CONFORM TO THE CITY OF ALBUQUERQUE STANDARD SPECIFICATIONS FOR PUBLIC WORKS CONSTRUCTION, LATEST EDITION.
2. ALL TRAFFIC CONTROL SHALL CONFORM TO THE CITY OF ALBUQUERQUE STANDARD TRAFFIC CONTROL PLANS.

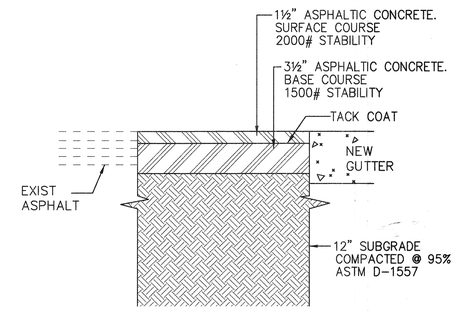

ASPHALT SECTION

N.T.S.

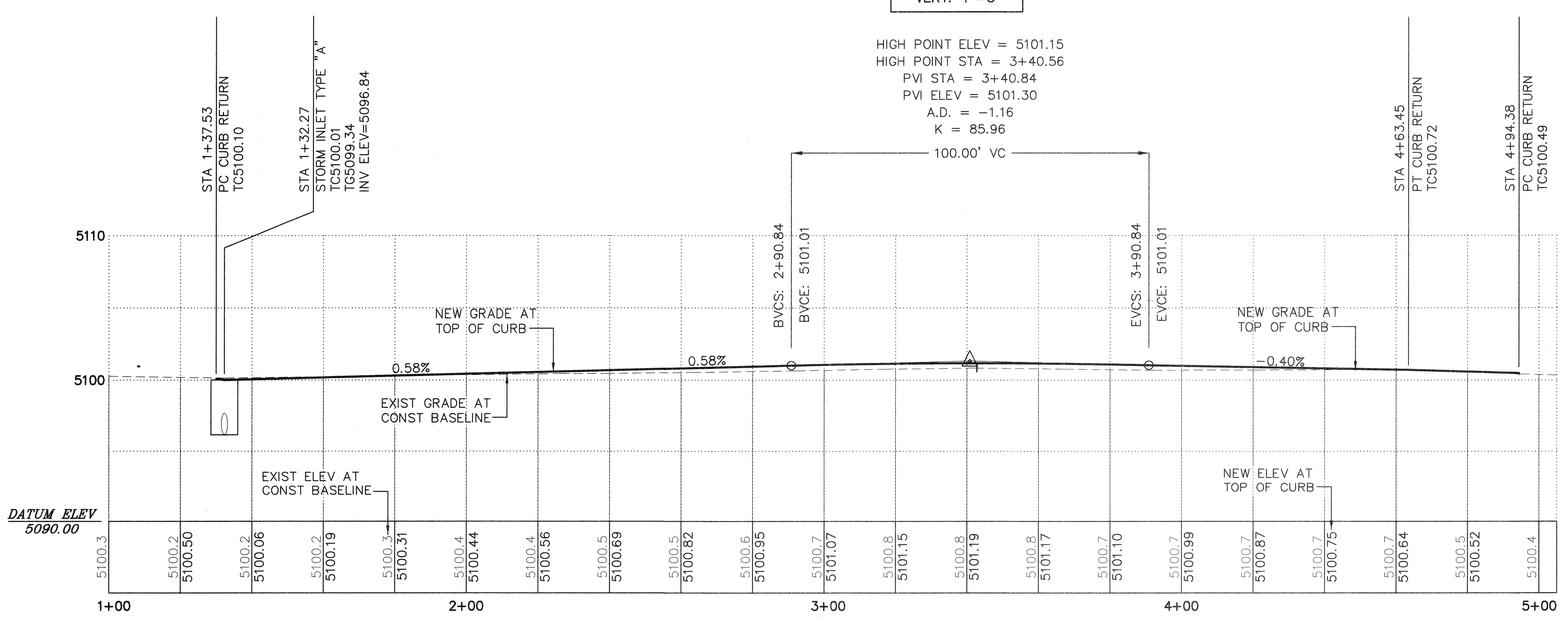

OURAY ROAD – PROFILE

AS BUILT
DATE 4-23-99

CERTIFICATION
THIS DRAWING HAS BEEN REVISED TO REFLECT THE CONSTRUCTION AS ACTUALLY ACCOMPLISHED
BY Benny E. McMillan 4-23-99
NAME DATE

AS BUILT INFORMATION
CONTRACTOR J. R. Hyde
WORK STAKED BY Richard Beard DATE 1/99
INSPECTOR'S ACCEPTANCE BY Donald McMillan DATE 2/99
FIELD VERIFICATION BY Benny McMillan DATE 2/99
DRAWINGS CORRECTED BY Benny McMillan DATE 4/23/99
MICRO–FILM INFORMATION
RECORDED BY DATE
NO.

BENCH MARKS

A 1–3/4" ALUMINUM DISK STAMPED "ACS BM, 9–H–11" EPOXIED TO THE TOP OF THE CONCRETE BASE OF THE FIRST GALVANIZED STEEL POWER POLE EAST OF COORS ROAD, 0.1 MILE NORTH OF OURAY ROAD NW ON THE WEST SIDE OF THE POLE	
BM ELEV. = 5101.518 FT	

SURVEY INFORMATION

FIELD NOTES

NO.	BY	DATE
	CHAVEZ GRIEVES ENG.	
	ALBUQUERQUE NM	5/98

ENGINEER'S SEAL
LOUIS J. MEDRANO NEW MEXICO 5218 REGISTERED PROFESSIONAL ENGINEER
6-22-98

REVISIONS

NO.	DATE	REMARKS	BY

DESIGNED J. ALARID DATE 06–98
DRAWN BY R. CASAUS DATE 06–98
CHECKED BY J. MILLINGTON DATE 06–98

CHAVEZ • GRIEVES CONSULTING ENGINEERS, INC.
5639 JEFFERSON STREET N.E. • ALBUQUERQUE, NEW MEXICO 87109
PHONE (505) 344–4080 • FAX (505) 343–8759

CITY OF ALBUQUERQUE
PUBLIC WORKS DEPARTMENT
ENGINEERING DEVELOPMENT GROUP

TITLE: VILLA HERMOSA
OURAY ROAD IMPROVEMENTS

Design Review Committee	City Engineer Approval	Last Design Update	Mo./Day/Yr.	Mo./Day/Yr.
6/29/98				

City Project No.	Zone Map No.	Sheet	Of
559481	H–11–Z	7	7

JOB NO.: D06–113–5196
FILE: VHC–WCCG.DWG (05–26–98) (PLOT VIEW "PLOT" IN PS)
REV: 06–23–98 (CG)