CONSTRUCTION PLANS FOR JEWEL OSCO

OFFSITE IMPROVEMENTS ALBUQUERQUE, NEW MEXICO

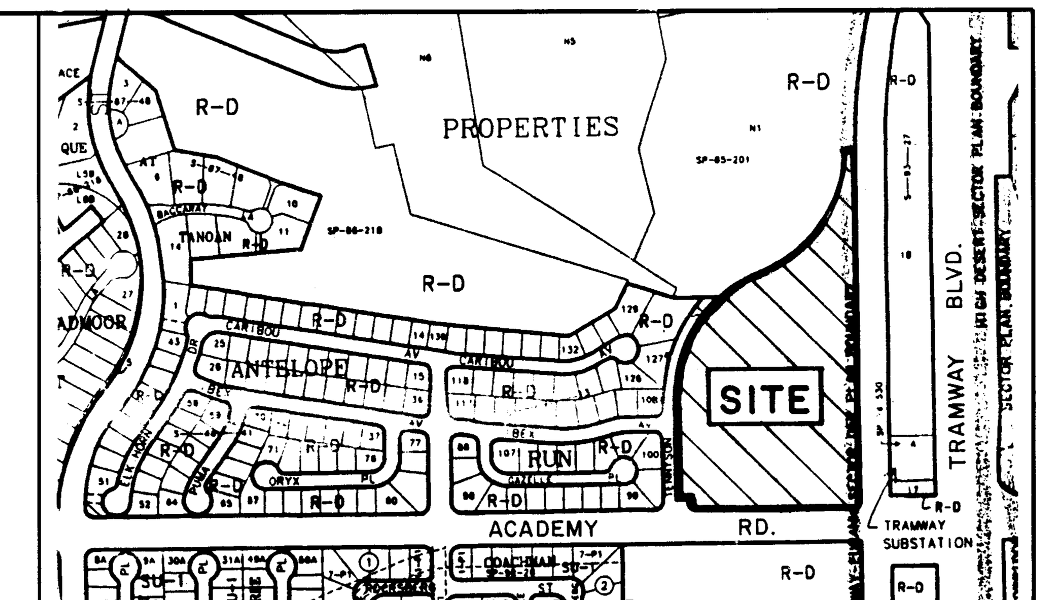

VICINITY MAP
NTS: ZONE ATLAS MAP NO. E-22

INDEX

SHEET	DESCRIPTION
1	**TITLE SHEET**
2	**PLAT**
	DEMOLITION PLANS
3	ACADEMY ROAD STA. 101+50.00 – 113+00.00
4	TENNYSON ST. STA. 1+00.00 – 8+00.00
5	TENNYSON ST. STA. 8+00.00 – 15+75.00
	PAVING PLANS
6	ACADEMY ROAD STA. 101+50.00 – 113+00.00
7	TENNYSON ST. STA. 1+00.00 – 8+00.00
8	TENNYSON ST. STA. 8+00.00 – 15+75.00
	UTILITY PLANS
9	ACADEMY ROAD STA. 101+50.00 – 113+00.00
10	TENNYSON ST. STA. 1+00.00 – 8+00.00
11	TENNYSON ST. STA. 8+00.00 – 15+75.00
	STRIPING AND SIGNAGE PLANS
12	ACADEMY ROAD STA. 101+50.00 – 113+00.00
13	TENNYSON ST. STA. 1+00.00 – 8+00.00
14	TENNYSON ST. STA. 8+00.00 – 15+75.00
	MISCELLANEOUS DETAILS
15A	TEE TYPE STORM SEWER MANHOLE DETAILS
15B	SIGNING AND CONSTRUCTION TRAFFIC CONTROL STANDARDS
15C	TYPICAL TRAFFIC CONTROL AND SIGNING EXAMPLES
15D	ROAD SECTIONS AND HANDICAP RAMPS

INDEX

SHEET	DESCRIPTION
	LANDSCAPING PLANS
16	TENNYSON ST. LANDSCAPING PLAN/DETAILS/NOTES
17	TENNYSON ST. IRRIGATION PLAN
18	TENNYSON ST. IRRIGATION DETAILS/NOTES
	TRAFFIC SIGNAL
19	NOTES AND LEGEND
20	ESTIMATED QUANTITIES
21	SIGNAL PLAN ACADEMY/TENNYSON
22&23	CONDUITS & CABLE ACADEMY/TENNYSON
24	FUNCTIONS & DETECTORS ACADEMY
25	INTERCONNECT PLAN ACADEMY
26	MASTARM DETAILS–TYPE III STANDARD/GALV STEEL
27	MASTARM DETAILS–TYPE III STANDARD/MISC DETAILS
28	MASTARM DETAILS–TYPE II STANDARD/GALV STEEL
29	MISCELLANEOUS DETAILS
30	MASTARM FOUNDATION DETAILS – TYPE II & III STANDARD
31	CONTROL CABINET & PEDESTAL FOUNDATION DETAILS
32	PULL BOX DETAILS
33	SPLICE CABINET GROUND MOUNT (LARGE)
34	METER PEDESTAL DETAILS FOR SIGNALS
35	OPTICAL DETECTOR INSTALLATION DETAILS
36	MACHINE VISION VEHICLE DETECTOR SYSTEM

NOTICE TO CONTRACTORS

1. ALL STREET STRIPING ALTERED OR DESTROYED SHALL BE REPLACED W/ PLASTIC REFLECTORIZED PAVEMENT MARKINGS BY CONTRACTOR TO LOCATION AS EXISTING OR AS INDICATED BY THIS THIS PLAN SET.
2. CONTRACTOR SHALL NOTIFY THE ENGINEER NOT LESS THAN SEVEN (7) DAYS PRIOR TO STARTING WORK IN ORDER THAT THE CITY SURVEYOR MAY TAKE NECESSARY MEASURES TO INSURE THE PRESERVATION OF SURVEY MONUMENTS. CONTRACTOR SHALL NOT DISTURB PERMANENT SURVEY MONUMENTS WITHOUT THE CONSENT OF THE CITY SURVEYOR AND SHALL NOTIFY THE CITY SURVEYOR AND BEAR THE EXPENSE OF REPLACING ANY THAT MAY BE DISTURBED WITHOUT PERMISSION. REPLACEMENT SHALL BE DONE ONLY BY THE CITY SURVEYOR. WHEN A CHANGE IS MADE IN THE FINISHED ELEVATIONS OF THE PAVEMENT OF ANY ROADWAY IN WHICH A PERMANENT SURVEY MONUMENT IS LOCATED, CONTRACTOR SHALL, AT HIS OWN EXPENSE, ADJUST THE MONUMENT COVER TO THE NEW GRADE UNLESS OTHERWISE SPECIFIED. REFER TO SECTION 4.4 OF THE GENERAL CONDITIONS OF THE STANDARD SPECIFICATIONS. ANY PERMANENT SURVEY MONUMENT WITHIN 50' OF THE PROJECT LIMITS NOT SHOWN ON THE PLANS THAT IS DESTROYED DURING CONSTRUCTION WILL BE REPLACED AT DESIGNER'S EXPENSE.
3. THREE (3) WORKING DAYS PRIOR TO BEGINNING CONSTRUCTION, THE CONTRACTOR SHALL SUBMIT TO CONSTRUCTION COORDINATION DIVISION A DETAILED CONSTRUCTION SCHEDULE. TWO (2) WORKING DAYS PRIOR TO CONSTRUCTION , THE CONTRACTOR SHALL OBTAIN A BARRICADING PERMIT FROM THE CONSTRUCTION CO–ORDINATION DIVISION. CONTRACTOR SHALL NOTIFY BARRICADE ENGINEER (768–2551) PRIOR TO OCCUPYING AN INTERSECTION. REFER TO SECTION 19 OF THE GENERAL CONDITIONS OF THE STANDARD SPECIFICATIONS.
4. ANY WORK WITHIN AN ARTERIAL ROADWAY REQUIRES TWENTY–FOUR HOUR CONSTRUCTION.

THE FOLLOWING NOTES ALSO APPLY WHEN CHECKED

- [x] ALL UTILITIES AND UTILITY SERVICE LINES SHALL BE INSTALLED PRIOR TO PAVING.
- [ ] BACKFILL COMPACTION SHALL BE ACCORDING TO SPECIFIED STREET USE.
- [ ] TACK COAT REQUIREMENTS SHALL BE DETERMINED BY THE CITY ENGINEER.
- [x] SIDEWALKS AND WHEELCHAIR RAMPS WITHIN THE CURB RETURNS SHALL BE CONSTRUCTED WHEREVER A NEW CURB RETURN IS CONSTRUCTED.
- [x] IF CURB IS DEPRESSED FOR A DRIVEPAD, THE DRIVEPAD SHALL BE CONSTRUCTED PRIOR TO ACCEPTANCE OF CURB AND GUTTER.
- [x] ALL STORM DRAINAGE FACILITIES SHALL BE COMPLETED PRIOR TO FINAL ACCEPTANCE.
- [x] THE REQUESTOR OR DEVELOPER SHALL BE RESPONSIBLE FOR REPAIR OR REPLACEMENT OF ALL CURB AND GUTTER OR SIDEWALK DAMAGED AFTER APPROVAL BY THE CITY ENGINEER OF WORK COMPLETED BY THE CONTRACTOR.

CONSTRUCTION NOTES:

1. ALL WORK DETAILED ON THESE PLANS AND PERFORMED UNDER THIS CONTRACT SHALL BE CONSTRUCTED IN ACCORDANCE WITH THE CITY OF ALBUQUERQUE STANDARD SPECIFICATIONS FOR PUBLIC WORKS CONSTRUCTION, LATEST EDITION.
2. THE CONTRACTOR SHALL ABIDE BY ALL LOCAL, STATE, AND FEDERAL LAWS, RULES AND REGULATIONS WHICH APPLY TO THE CONSTRUCTION OF THESE IMPROVEMENTS.
3. PRIOR TO CONSTRUCTION, THE CONTRACTOR SHALL EXCAVATE AND VERIFY THE HORIZONTAL AND VERTICAL LOCATIONS OF ALL POTENTIAL OBSTRUCTIONS. SHOULD A CONFLICT EXIST, THE CONTRACTOR SHALL NOTIFY THE ENGINEER OR CONSTRUCTION OBSERVER SO THAT THE CONFLICT CAN BE RESOLVED WITH A MINIMUM AMOUNT OF DELAY.
4. TWO (2) WORKING DAYS PRIOR TO ANY EXCAVATION, THE CONTRACTOR MUST CONTACT NEW MEXICO ONE CALL SYSTEM (260–1990) FOR LOCATION OF EXISTING UTILITIES.
5. ALL ELECTRICAL, TELEPHONE, CABLE TV, GAS AND OTHER UTILITY LINES, CABLES, AND APPURTENANCES ENCOUNTERED DURING CONSTRUCTION THAT REQUIRE RELOCATION, SHALL BE COORDINATED WITH THAT UTILITY. THE CONTRACTOR SHALL BE RESPONSIBLE FOR COORDINATION OF ALL NECESSARY UTILITY ADJUSTMENTS. NO ADDITIONAL COMPENSATION WILL BE ALLOWED FOR DELAYS OR INCONVENIENCES CAUSED BY UTILITY COMPANY WORK CREWS. THE CONTRACTOR MAY BE REQUIRED TO RESCHEDULE HIS ACTIVITIES TO ALLOW UTILITY CREWS TO PERFORM THEIR REQUIRED WORK.
6. A DISPOSAL SITE FOR ALL EXCESS EXCAVATION MATERIAL, AND UNSUITABLE MATERIAL SHALL BE OBTAINED BY THE CONTRACTOR IN COMPLIANCE WITH APPLICABLE ENVIRONMENTAL REGULATIONS AND APPROVED BY THE CONSTRUCTION OBSERVER. ALL COSTS INCURRED IN OBTAINING A DISPOSAL SITE AND HAUL THERETO SHALL BE CONSIDERED INCIDENTAL TO THE PROJECT AND NO SEPARATE MEASUREMENT OR PAYMENT SHALL BE MADE.
7. THE CONTRACTOR IS RESPONSIBLE FOR PROTECTING THE EXISTING UTILITY LINES WITHIN THE CONSTRUCTION AREA. ANY DAMAGE TO EXISTING FACILITIES CAUSED BY CONSTRUCTION ACTIVITY SHALL BE REPAIRED OR REPLACED AT THE CONTRACTOR'S EXPENSE AND APPROVED BY THE CONSTRUCTION OBSERVER.
8. CONSTRUCTION ACTIVITY SHALL BE LIMITED TO THE PROPERTY AND/OR PROJECT LIMITS. ANY DAMAGE TO ADJACENT PROPERTIES RESULTING FROM THE CONSTRUCTION PROCESS IS THE RESPONSIBILITY OF THE CONTRACTOR. ANY COSTS INCURRED FOR REPAIRS SHALL BE THE COST OF THE CONTRACTOR.
9. OVERNIGHT PARKING OF CONSTRUCTION EQUIPMENT SHALL NOT OBSTRUCT DRIVEWAYS OR DESIGNATED TRAFFIC LANES. THE CONTRACTOR SHALL NOT STORE ANY EQUIPMENT OR MATERIAL WITHIN THE PUBLIC RIGHT–OF WAY.
10. THE CONTRACTOR SHALL OBTAIN ALL THE NECESSARY PERMITS FOR THE PROJECT PRIOR TO COMMENCING CONSTRUCTION (I.E. BARRICADING, TOPSOIL DISTURBANCE AND EXCAVATION PERMITS, ETC.)
11. THE CONTRACTOR SHALL BE RESPONSIBLE TO REPLACE AT HIS EXPENSE ANY AND ALL PROPERTY CORNERS DESTROYED DURING CONSTRUCTION. ALL PROPERTY CORNERS MUST BE RESET BY A REGISTERED LAND SURVEYOR.
12. ALL PERMANENT PAVEMENT MARKING AND TRAFFIC SIGNING SHALL BE FURNISHED AND INSTALLED BY THE CONTRACTOR PER PLAN.
13. THE CONTRACTOR SHALL FOLLOW THE CONSTRUCTION TRAFFIC CONTROL AND SIGNING PLAN PROVIDED HEREIN. THE CONTRACTOR SHALL COORDINATE WITH THE CITY OF ALBUQUERQUE, TRAFFIC ENGINEERING DEPARTMENT, PRIOR TO BEGINNING ANY CONSTRUCTION WORK ON OR ADJACENT TO EXISTING STREETS.
14. ALL BARRICADES AND CONSTRUCTION SIGNING SHALL CONFORM TO APPLICABLE SECTIONS OF THE "MANUAL ON UNIFORM TRAFFIC CONTROL DEVICES" (MUTCD), U.S. DEPARTMENT OF TRANSPORTATION, LATEST EDITION.
15. THE CONTRACTOR SHALL MAINTAIN ALL CONSTRUCTION BARRICADES AND SIGNING AT ALL TIMES. THE CONTRACTOR SHALL VERIFY THE PROPER LOCATION OF ALL BARRICADING AT THE END AND BEGINNING OF EACH DAY.
16. ALL SAWCUT PAVEMENT SHALL HAVE A UNIFORM EDGE AND BE SPRAYED WITH TACK.
17. WHEN ABUTTING NEW CURB AND GUTTER TO EXISTING PAVEMENT, A 1' WIDE SECTION OF EXISTING PAVEMENT ADJACENT TO THE CURB AND GUTTER SHALL BE SAWCUT, REMOVED, AND REPLACED AS PER THE STANDARD SPECIFICATIONS.
18. THE CONTRACTOR SHALL ASSUME RESPONSIBILITY FOR ANY DAMAGE TO EXISTING PAVEMENTS, PAVEMENT MARKINGS, CURB & GUTTER, DRIVE PADS, WHEELCHAIR RAMPS, AND SIDEWALK DURING CONSTRUCTION, APART FROM THOSE SECTIONS INDICATED FOR REMOVAL ON THE PLANS AND SHALL REPAIR OR REPLACE PER COA STANDARDS, AT HIS OWN EXPENSE.

RECORD DRAWING
DATE: 11-19-97

BOHANNAN-HUSTON INC.
ENGINEERS • PLANNERS • PHOTOGRAMMETRISTS • SURVEYORS • LANDSCAPE ARCHITECTS
ALBUQUERQUE LAS CRUCES SANTA FE

REV.	SHEETS	CITY ENGINEER	DATE	USER DEPARTMENT	DATE	USER DEPARTMENT	DATE

ENGINEERS STAMP & SIGNATURE	APPROVALS	ENGINEER	DATE
	DRC Chairman	Billy J. Goldsby	6-5-97
	Transportation	[signature]	5-23-97
	Water/Wastewater	R.W. Kane	5-13-97
	Hydrology	[signature]	5-13-97
	~~Parks~~ CIP		
	Const. Mngmt.	David Cates	6-5-97
5-1-97	~~NMUI~~		

APPROVED FOR CONSTRUCTION
City Engineer [signature] Date 8/1/97

CITY PROJECT NO.	DRB CASE NO.	SHEET	OF
562181	96–525	1	36

BHI PROJECT NO. C96238A2450
FILENAME: W-TITLE.DWG
4/29/97

COPYRIGHT BOHANNAN–HUSTON, INC.
APRIL, 1997

26 5621 8198E22

SCANNED BY
BY LASON

SP 96102411310300

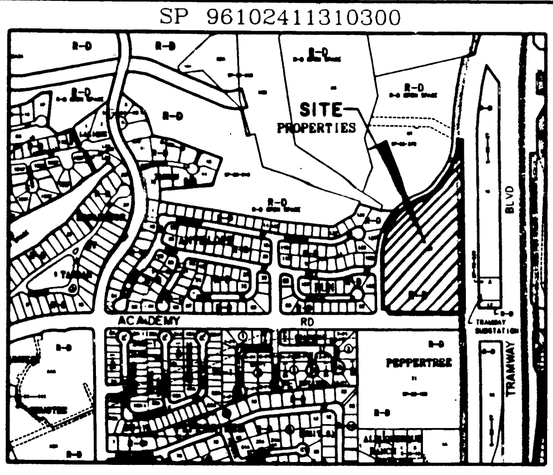

LOCATION MAP
ZONE ATLAS INDEX MAP No. E-22-Z
NOT TO SCALE

SUBDIVISION DATA

1. DRB No. 96-825
2. Zone Atlas Index No. E-22-Z.
3. Gross Subdivision Acreage: 11.2105 Acres.
4. Total Number of Tracts created: 1 Tract.
5. Total mileage of full width Streets created: 0 mile.
6. Total mileage of partial width Streets created: 0.3489 mile.
7. Date of Survey: October, 1996
8. Plat is located within the Elena Gallegos Grant, within Projected Section 27, T11N, R4E, NMPM.

NOTES

1. Bearings are New Mexico State Plane Grid Bearings (Central Zone NAD27 Datum).
2. Distances are ground distances.
3. All easements of record are shown.
4. Centerline (in lieu of R/W monumentation to be installed at all centerline PC's, PT's, angle points and street intersections prior to acceptance of subdivision street improvements and will consist of a standard four-inch (4") aluminum alloy cap stamped "City of Albuquerque", "Centerline Monumentation", "Survey Marker", "Do Not Disturb", "PLS#6544".
5. **Prior to development, City of Albuquerque Water and Sanitary Sewer Service to this subdivision must be verified and coordinated with the Public Works Department, City of Albuquerque, via a request for a water and sanitary sewer availability statement.**

DISCLOSURE STATEMENT

The purpose of this Plat is to subdivide all of Tract M-1, of the REVISION PLAT OF TANOAN PROPERTIES, Albuquerque, New Mexico as the same is shown and designated on the plat thereof, filed for record in the office of the County Clerk of Bernalillo County, New Mexico on May 7, 1985 in Volume C27, Folio 37 as Document No. 85-35406 into One (1) Tract, to dedicate Street Right-of-Way to the City of Albuquerque, (Fee Simple with Warranty Covenants) and to grant easements.

PUBLIC UTILITY EASEMENTS

PUBLIC UTILITY EASEMENTS shown on this plat are ten (10) feet wide and are for the common joint use of:

A. PNM Electric Services for the installation, maintenance, and service of overhead and underground electrical lines, transformers, and other equipment, fixtures, structures and related facilities reasonably necessary to provide electrical service.

B. PNM Gas Services for installation, maintenance, and service of natural gas lines, valves and other equipment and facilities reasonably necessary to provide natural gas. natural gas.

C. U.S. West for the installation, maintenance and service of all buried and aerial communication lines and other related equipment and facilities reasonably necessary to provide communication services, including but not limited to above ground pedestals and closures.

D. Jones Intercable for the installation, maintenance, and service of such lines, cable, and other related equipment and facilities reasonably necessary to provide Cable TV service.

Included is the right to build, rebuild, construct, reconstruct, locate, relocate, change, remove, modify, renew, operate, and maintain facilities for the purposes described above, together with free access to, from, and over said easements, including sufficient working area space for electric transformers, with the right and privilege to trim and remove trees, shrubs or bushes which interfere with the purposes set forth herein. No building, sign, pool (above ground or subsurface), hot tub, concrete or wood pool decking, or other structure shall be erected or constructed on said easements, nor shall any well be drilled or operated thereon. Property owners shall be solely responsible for correcting any violations of National Electric Safety Code caused by construction of pools, decking, or any structures adjacent to or near easements shown on this plat.

#50-435

DESCRIPTION

A certain tract of land situate within the Elena Gallegos Grant, within Section 27 (as projected), Township 11 North, Range 4 East, New Mexico Principal Meridian, Bernalillo County, Albuquerque, New Mexico being and comprising all of Tract M-1 of the REVISION PLAT OF TANOAN PROPERTIES, Albuquerque, New Mexico as the same is shown and designated on the plat thereof, recorded in the office of the County Clerk of Bernalillo County, New Mexico on May 7, 1985 in Volume C27, Folio 37 as Document No. 85-35406 and being more particularly described by New Mexico State Plane Grid Bearings (Central Zone NAD 27 Datum) and ground distances as follows:

BEGINNING at the northeast corner of said Tract M-1, a point on the westerly right-of-way line of Tramway Boulevard N.E., whence the City of Albuquerque Station "TUMBLE" a standard USCGS brass tablet set in concrete, having New Mexico State Plane Coordinates, Central Zone NAD 27 Datum of X=425,465.55 and Y=1,513,470.01 bears N17°51'49"W, a distance of 1538.78 feet and from said point of beginning running thence along the easterly boundary line of said Tract M-1 and also along said right-of-way line,
S00°01'18"W, a distance of 1164.60 feet to a point of curvature; thence,
39.43 feet along the arc of a curve to the right having a radius of 25.00 feet and a chord which bears S45°12'12"W, a distance of 35.47 feet to a point of tangency on the northerly right-of-way line of Academy Road, N.E. and also being a point on the southerly boundary line of said Tract M-1; thence running along the southerly boundary line of said Tract M-1 and also along said right-of-way line,
N89°36'55"W, a distance of 509.00 feet to a point of curvature; thence,
47.12 feet along the arc of a curve to the right having a radius of 30.00 feet and a chord which bears N44°36'55"W, a distance of 42.43 feet to a point of non-tangency; thence,
N89°36'55"W, a distance of 43.00 feet to the southwest corner of said Tract M-1, thence leaving said right-of-way line and running thence along the westerly boundary line of said Tract M-1,
N00°23'04"E, a distance of 335.82 feet to a point of curvature; thence,
532.31 feet along the arc of a curve to the right having a radius of 450.00 feet and a chord which bears N34°16'20"E, a distance of 501.81 feet to a point of reverse curvature; thence,
523.81 feet along the arc of a curve to the left having a radius of 450.00 feet and a chord which bears N34°48'47"E, a distance of 494.74 feet to a point of non-tangency being the northwest corner of said Tract M-1, thence running along the northerly boundary line of said Tract M-1,
S88°34'14"E, a distance of 40.13 feet to the point and place of beginning.

Tract contains 488,331 square feet or 11.2105 acres, more or less.

FREE CONSENT AND DEDICATION

The foregoing Plat of that certain tract of land situate within the Elena Gallegos Grant, in projected Section 27, Township 11 North, Range 4 East, New Mexico Principal Meridian, Bernalillo County, Albuquerque, New Mexico being and comprising all of Tract M-1 of the REVISION PLAT OF TANOAN PROPERTIES, Albuquerque, New Mexico as the same is shown and designated on the plat thereof, recorded in the office of the County Clerk of Bernalillo County, New Mexico on May 7, 1985 in Volume C27, Folio 37 as Document No. 85-35406, now comprising Tract M-1-A, TANOAN PROPERTIES is with the free consent and in accordance with the desires of the undersigned owner(s) and/or proprietor(s) thereof and said owner(s) and/or proprietor(s) do hereby dedicate all streets and public rights-of-way shown hereon to the City of Albuquerque in Fee Simple with Warranty Covenants and do hereby grant: All access, Utility and Drainage Easements hereon including the right to construct, operate, inspect, and maintain facilities therein; and all Public Utility easements shown hereon for the common and joint use of Gas, Electical Power and Communication Services for buried distribution lines, conduits, pipes for underground Utilities where shown or indicated, and including the right of ingress and egress for construction and maintenance, and the right to trim interfering trees and shrubs. Said owner(s) and/or proprietor(s) do hereby consent to all of the foregoing and do hereby certify that this subdivision is with their free consent and deed.

AMERICAN STORE PROPERTIES, INC.,
a Delaware Corporation

ATTEST:

BY: Jack Lunt, Executive Vice President — Assistant Secretary

State of Utah)
County of Salt Lake) SS

This instrument was acknowledged before me on 7th day of November 1996 by Jack Lunt, Executive Vice President, American Stores Properties, Inc. a Delaware Corporation

My Commission Expires: May 29, 2000 — Notary Public

97013297

PLAT OF
TRACT M-1-A
TANOAN PROPERTIES
ALBUQUERQUE, NEW MEXICO
OCTOBER, 1996

State of New Mexico
County of Bernalillo } SS
This instrument was filed for record on
1:16 FEB - 6 1997 o'clock p.m. Recorded in Vol. 97C
of records of said County Folio 44
Clerk & Recorder
Deputy Clerk

$.97.13

APPROVALS

PLAT NUMBER _____

	DATE
PLANNING DIRECTOR	2-6-97
CITY ENGINEER	2-4-97
A.M.A.F.C.A	12-23-96
TRAFFIC ENGINEER	11-26-96
CITY SURVEYOR	11-13-96
PROPERTY MANAGEMENT	11-26-96
UTILITY DEVELOPMENT DEPARTMENT	11-26-96
DESIGN & DEVELOPMENT	11-26-96
PNM ELECTRIC SERVICES	11-18-96
U.S. WEST COMMUNICATIONS	11-11-96
PNM GAS SERVICES	11-18-96

THIS IS TO CERTIFY THAT TAXES ARE CURRENT AND PAID ON UPC# 1-022-062-440300-10209

PROPERTY OWNER OF RECORD: NEW MEXICO & ARIZONA LAND

BERNALILLO COUNTY TREASURER'S OFFICE — DATE 2-6-97

SURVEYOR'S CERTIFICATION

I, A. Dwain Weaver, a registered Professional New Mexico Surveyor, certify that I am responsible for this survey and that this plat was prepared by me or under my supervision, shows all easements of record, and conforms to the Minimum Requirements of the Board of Registration for Professional Engineers and Professional Surveyors in February 1994 and meets the minimum requirements for monumentation and surveys contained in the Albuquerque Subdivision Ordinance, and is true and accurate to the best of my knowledge and belief.

A. DWAIN WEAVER — NEW MEXICO 6544 — REGISTERED PROFESSIONAL SURVEYOR

Bohannan-Huston Inc.
Courtyard I
7500 Jefferson Street, N.E.
Albuquerque, New Mexico 87109

A. Dwain Weaver
New Mexico Professional Surveyor 6544
Date: Oct. 24, 1996

JOB NO. 96238-A-3212

BOHANNAN-HUSTON INC.
ENGINEERS • PLANNERS • PHOTOGRAMMETRISTS • SURVEYORS • LANDSCAPE ARCHITECTS
ALBUQUERQUE LAS CRUCES SANTA FE

C:\ADCADD\CIVIL\P\S96238.SHEET1.DWG 10/24/1996

97013297

PLAT OF
TRACT M-1-A
TANOAN PROPERTIES
ALBUQUERQUE, NEW MEXICO
OCTOBER, 1996

RECORD DRAWING
DATE: 11-13-97

SCANNED BY LASON

SHEET 2 of 36

N
100 50 0 100
SCALE: 1" = 100'

NGS/ACS Aluminum Tablet stamped "TUMBLE"
Geographic Position (NAD 1927)
N.M. State Plane Coordinates (Central Zone)
X= 425,465.55 Y= 1,513,470.01
Ground-to-Grid Factor = 0.9996197
ΔΦ = -00°08'37"
Elevation = 6009.155

State of New Mexico
County of Bernalillo } SS
This instrument was filed for record on
1:16 FEB - 6 1997 o'clock p.m. Recorded in Vol. 97C
of records of said County Folio 44
Clerk & Recorder
Deputy Clerk

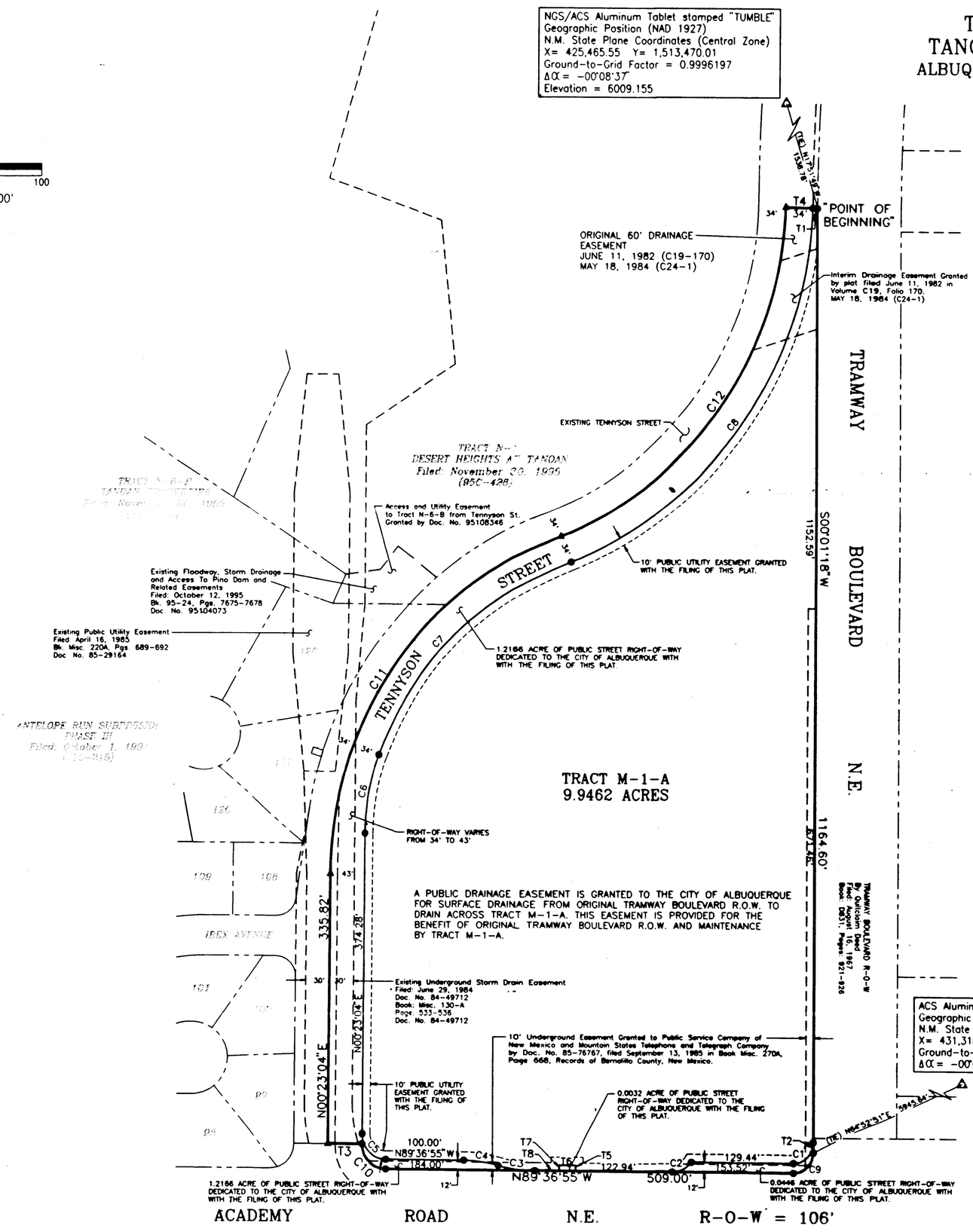

LEGEND	
═══	BOUNDARY LINE
───	NEW LOT LINE
— — —	ADJOINING PROPERTY LINE
— — —	MONUMENT TIE LINE
- - - -	EXISTING EASEMENT LINE
- - - -	NEW EASEMENT LINE
△	CITY OF ALBUQUERQUE SURVEY CONTROL MONUMENT
●	SET 5/8" CAPPED REBAR STAMPED "WEAVER LS 6544"
●	EXISTING 5/8" REBAR WITH YELLOW PLASTIC CAP STAMPED "WEAVER LS 6544"
▲	CENTERLINE MONUMENTATION TO BE INSTALLED
○	EXISTING 5/8" REBAR WITH SURVEY CAP STAMPED STAMPED "HUGG LS 9750"

TANGENT DATA		
NUMBER	DIRECTION	DISTANCE
T1	S88°34'14"E	6.13'
T2	S00°01'18"W	12.00'
T3	N89°36'55"W	43.00'
T4	S88°34'14"E	40.13'
T5	N00°23'05"E	7.00'
T6	N89°36'55"W	20.00'
T7	S00°23'05"W	7.00'
T8	N89°36'55"W	28.55'

CURVE DATA						
NUMBER	RADIUS	ARC	TANGENT	CHORD	BEARING	DELTA
C1	25.00'	39.43'	25.16'	35.47'	S45°12'12"W	90°21'47"
C2	30.00'	27.82'	15.00'	26.83'	S63°49'11"W	53°07'48"
C3	150.00'	42.57'	21.43'	42.43'	N81°29'07"W	16°15'37"
C4	150.00'	42.57'	21.43'	42.43'	N81°29'07"W	16°15'37"
C5	30.00'	47.12'	30.00'	42.43'	N44°36'55"W	90°00'00"
C6	270.00'	95.30'	48.15'	94.80'	N10°29'45"E	20°13'22"
C7	416.00'	345.26'	183.27'	335.44'	N44°23'01"E	47°33'10"
C8	484.00'	563.41'	318.51'	532.13'	N34°48'42"E	66°41'47"
C9	25.00'	39.43'	25.16'	35.47'	S45°12'12"W	90°21'47"
C10	30.00'	47.12'	30.00'	42.43'	N44°36'55"W	90°00'00"
C11	450.00'	532.31'	302.25'	501.81'	N34°16'20"E	67°46'32"
C12	450.00'	523.81'	296.12'	494.74'	N34°48'47"E	66°41'38"

SHEET 2 OF 2

JOB NO. 96238-A-3212

BOHANNAN-HUSTON INC.
ENGINEERS • PLANNERS • PHOTOGRAMMETRISTS • SURVEYORS • LANDSCAPE ARCHITECTS
ALBUQUERQUE LAS CRUCES SANTA FE

C:\ADCADD\CIVIL\P\S96238\SHEET2.DWG 12/06/1996

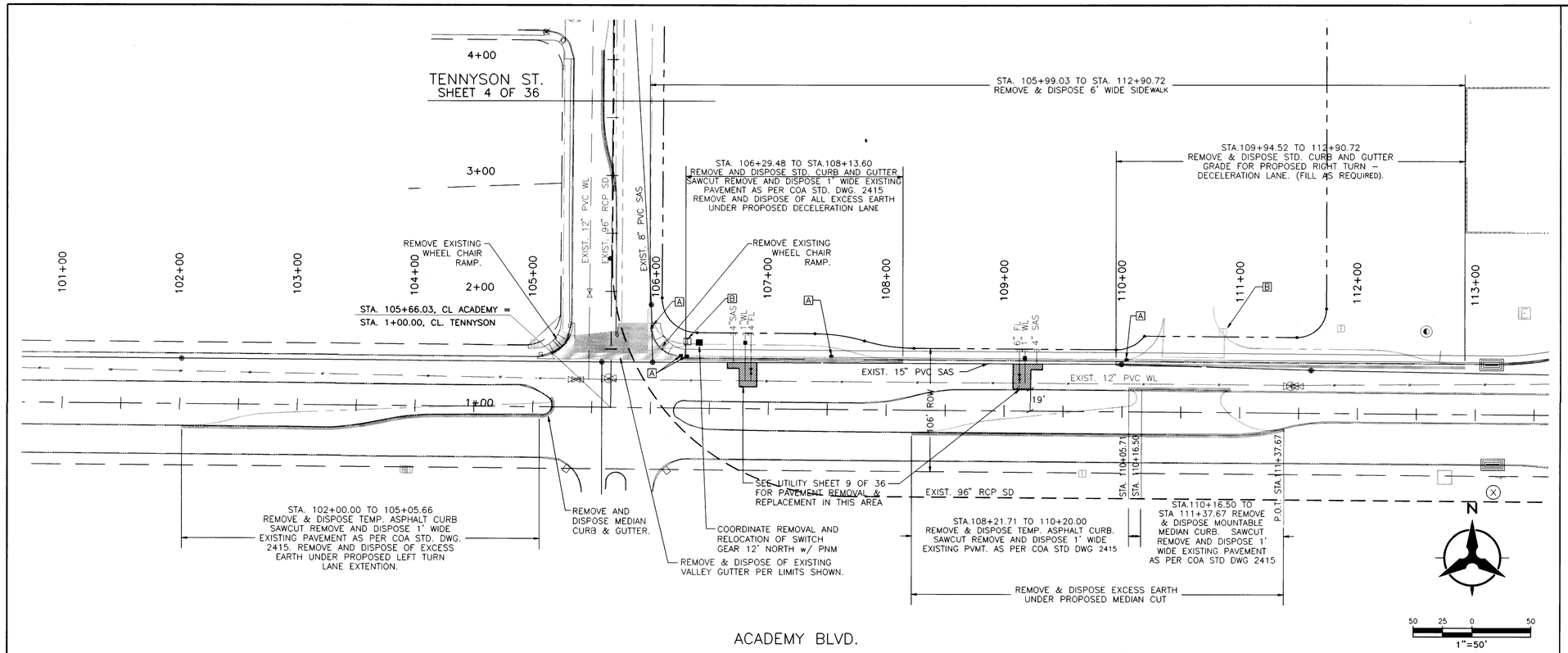

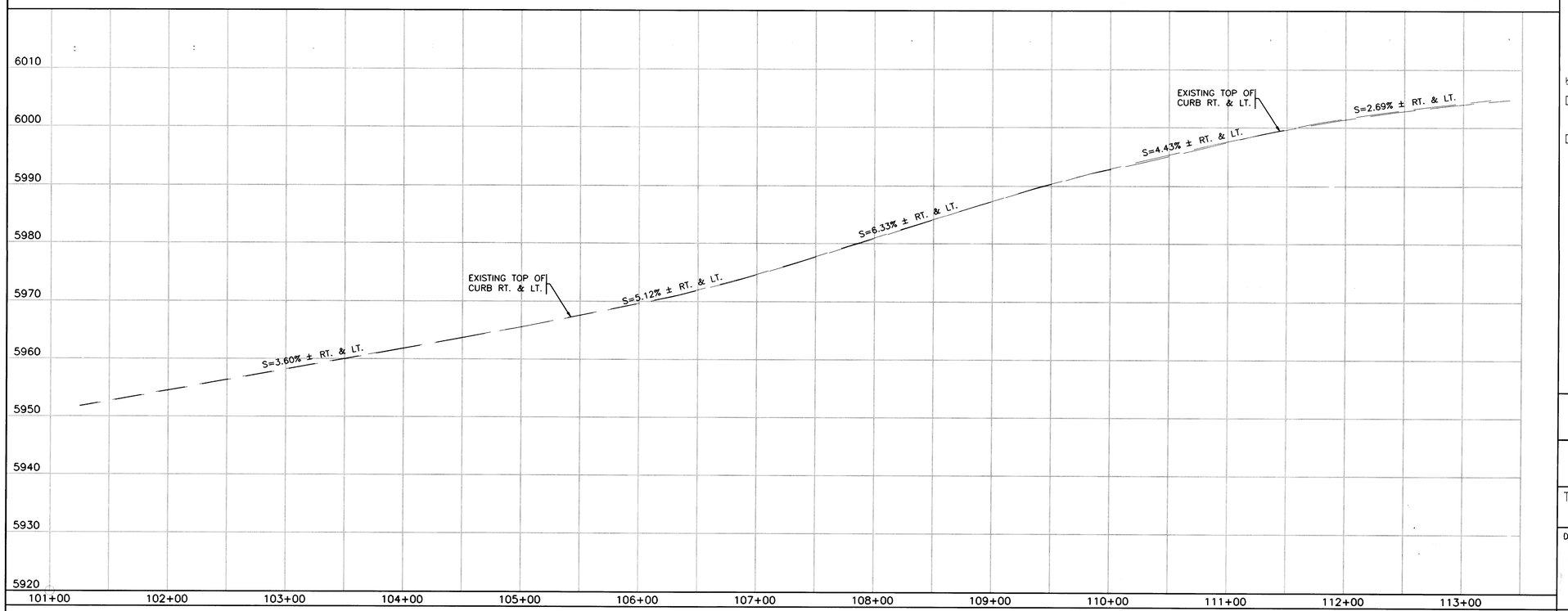

SCALE: 1"=50' (HORIZ.)
1"=10' (VERT.)

NOTES:

1. THE CONTRACTOR SHALL FIELD VERIFY ALL EXISTING UTILITY LOCATIONS AND NOTIFY THE ENGINEER IMMEDIATELY OF ANY DISCREPANCIES.

2. ALL CURB RETURN RADII SHALL BE 25' TO FACE OF CURB UNLESS OTHERWISE SPECIFIED.

3. ALL CURVE DATA AND DIMENSIONS REFER TO FACE OF CURB UNLESS OTHERWISE SPECIFIED.

4. GRADE ELEVATIONS WHERE NOTED ARE FOR TOP OF STANDARD CURB UNLESS OTHERWISE SPECIFIED.

5. THE CONTRACTOR IS TO INSTALL A 4"x4"x5' POST AND EMD AT THE END OF EACH SANITARY SEWER SERVICE.

6. THE CONTRACTOR IS RESPONSIBLE FOR REPAIR AND/OR REPLACEMENT OF ALL UTILITY CONDUITS AND EXISTING LINES.

7. ANY ADDITIONAL GRADING REQUIRED TO MATCH PROPOSED STREET GRADES SHALL BE INCIDENTAL TO PAVING ITEMS.

8. THE CONTRACTOR SHALL PROVIDE THE INSPECTORS (CITY AND PRIVATE) WITH THE PROPOSED HYDROSTATIC TESTING PLAN. THE PLAN MUST BE APPROVED BEFORE TESTING OPERATIONS BEGIN.

9. THE CONTRACTOR SHALL PARK EQUIPMENT AND VEHICLES AS NOT TO INTERFERE WITH NORMAL ACTIVITIES OF RESIDENTS OR OTHER CONTRACTORS ON SITE.

10. ANY DAMAGE TO THE EXISTING FACILITIES (CURB, GUTTER, PAVEMENT, CONDUITS, LANDSCAPING, UTILITY LINES, ETC...) DURING CONSTRUCTION SHALL BE REPLACED AT THE CONTRACTORS EXPENSE.

11. REMOVAL OF ANY EXISTING CURB AND GUTTER SHALL BE AS PER COA STD. DWG. 2415 (S.WCUT ONLY).

12. WHEEL CHAIR RAMPS SHALL BE CONSTRUCTED PRIOR TO ACCEPTANCE OF CURB AND GUTTER.

13. THE FOLLOWING PERSONS SHALL BE NOTIFIED AT LEAST TWO BUSINESS DAYS PRIOR TO INSTALLING UTILITY CONDUIT CROSSINGS:

COMPANY	PHONE
PNM.	848-3374
US WEST	245-6694
JONES	761-6200
GAS CO	761-7770

14. FOR RESTRAINED JOINTS, SEE TABLE – SHEET 9 OF 36. (TYP).

15. FIRE HYDRANTS RESTRAINED FROM DISTRIBUTION LINE TO FLANGE (TYP).

KEYED NOTES:

[A] COORDINATE REMOVAL AND REPLACEMENT OF EXISTING SIGNAL BOX w/ C.O.A. TRAFFIC OPERATIONS.

[B] COORDINATE REMOVAL AND RELOCATION OF EXISTING US WEST PEDESTAL w/ US WEST.

JAMES P. WHEELER
NEW MEXICO
12-01-97
REGISTERED PROFESSIONAL SURVEYOR

RECORD DRAWING
DATE: 11-19-97

AS-BUILT INFORMATION

CONTRACTOR	Jaynes Corp.	DATE 10/97
WORK STAKED BY	BH	DATE 10/97
INSPECTOR'S ACCEPTANCE BY	BH	DATE 10/97
FIELD VERIFICATION BY	BH	DATE 10/97
DRAWINGS CORRECTED BY	BH	DATE 10/97

MICROFILM INFORMATION

RECORDED BY	DATE
NO.	

BENCH MARKS

NGS/ACS ALUMINUM TABLET STAMPED "TUMBLE"
GEOGRAPHIC POSITION (NAD 1927)
N.M. STATE PLANE COORDINATES (CENTRAL ZONE)
X=425,465.55, Y=1,513,470.01
GROUND-TO-GRID FACTOR=0.9996197
Δα=00° 08' 37"
ELEVATION=6009.155

SURVEY INFORMATION

NO.	FIELD NOTES BY	DATE

ENGINEER'S SEAL

5-1-97

NO.	DATE	REMARKS	BY

REVISIONS

DESIGN

DESIGNED BY MSJ	DATE 4/29/97
DRAWN BY BES	DATE 4/29/97
CHECKED BY JRT	DATE 4/29/97

BOHANNAN-HUSTON INC.
ENGINEERS • PLANNERS • PHOTOGRAMMETRISTS • SURVEYORS • LANDSCAPE ARCHITECTS
ALBUQUERQUE LAS CRUCES SANTA FE

CITY OF ALBUQUERQUE
PUBLIC WORKS DEPARTMENT
ENGINEERING DEVELOPMENT GROUP

TITLE: JEWEL OSCO: DEMOLITION PLANS
ACADEMY ROAD STA.101+50.00 – 113+00.00

DESIGN REVIEW COMMITTEE	CITY ENGINEER APPROVAL	LAST DESIGN UPDATE	MO./DAY/YR.	MO./DAY/YR.

CITY PROJECT NO.	ZONE MAP NO.	SHEET	OF
562181	E-22	3	36

PROJECT NO.: C96238A2450
FILENAME: 96238\CDP\A2450\DWG\JO_DEMO.DWG
XREFS: SITE.DWG, WORKING1.DWG, JEWEL.DWG
SHT1

SCANNED BY
BY JASON

COPYRIGHT BOHANNAN-HUSTON, INC.
1/97

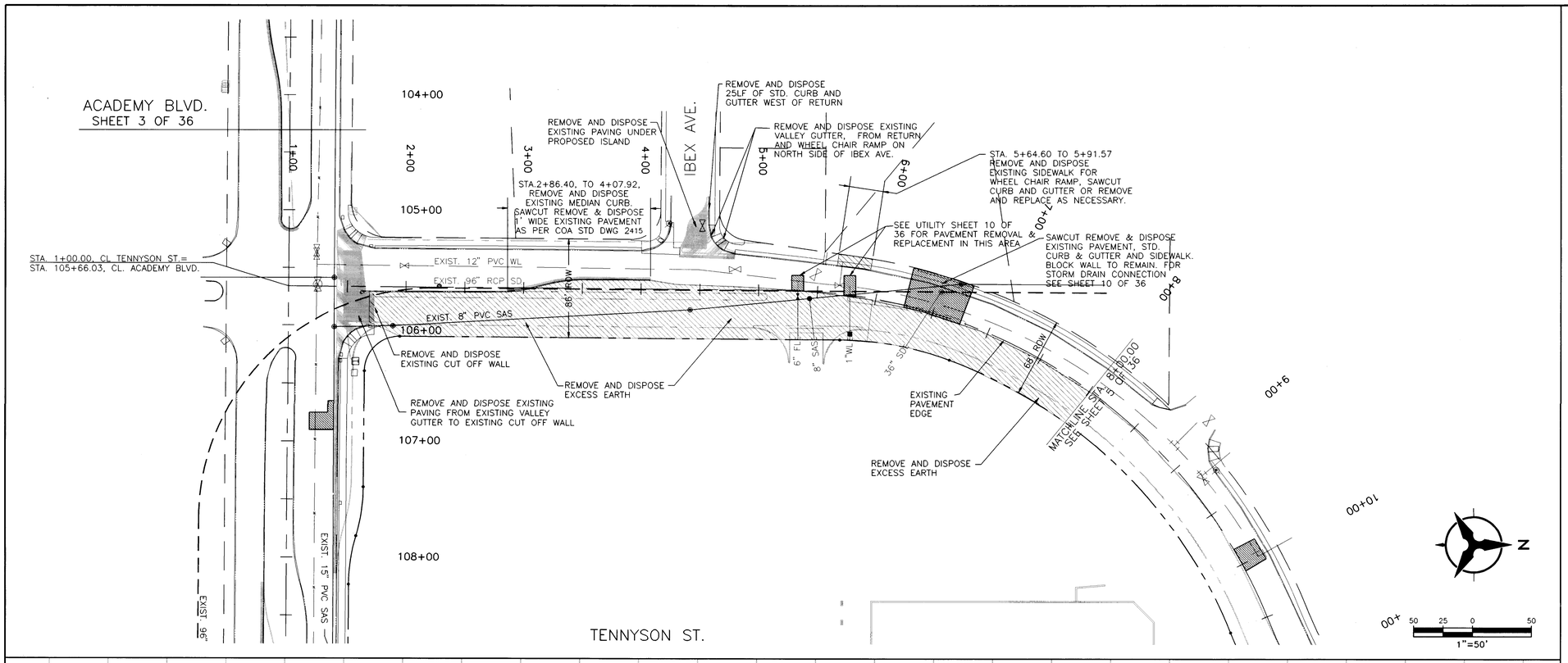

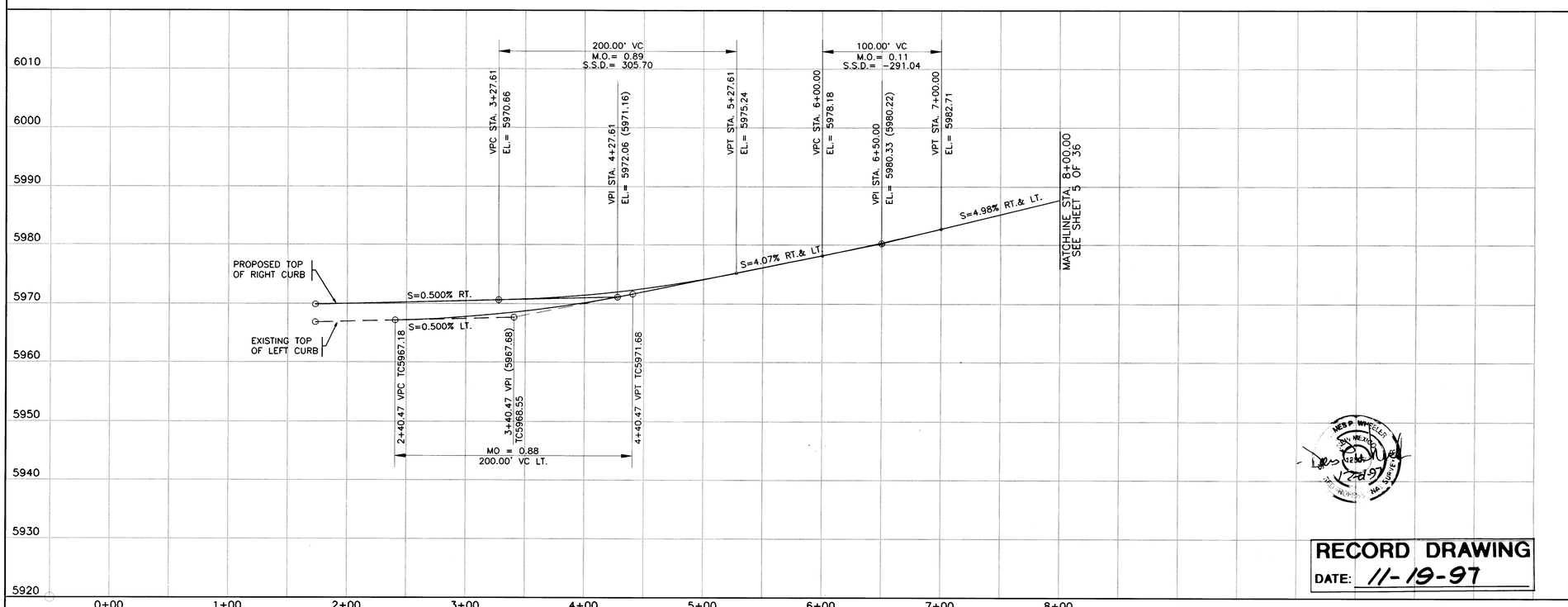

NOTES:

1. THE CONTRACTOR SHALL FIELD VERIFY ALL EXISTING UTILITY LOCATIONS AND NOTIFY THE ENGINEER IMMEDIATELY OF ANY DISCREPANCIES.

2. ALL CURB RETURN RADII SHALL BE 25' TO FACE OF CURB UNLESS OTHERWISE SPECIFIED.

3. ALL CURVE DATA AND DIMENSIONS REFER TO FACE OF CURB UNLESS OTHERWISE SPECIFIED.

4. GRADE ELEVATIONS WHERE NOTED ARE FOR TOP OF STANDARD CURB UNLESS OTHERWISE SPECIFIED.

5. THE CONTRACTOR IS TO INSTALL A 4"x4"x5' POST AND EMD AT THE END OF EACH SANITARY SEWER SERVICE.

6. THE CONTRACTOR IS RESPONSIBLE FOR REPAIR AND/OR REPLACEMENT OF ALL UTILITY CONDUITS AND EXISTING LINES.

7. ANY ADDITIONAL GRADING REQUIRED TO MATCH PROPOSED STREET GRADES SHALL BE INCIDENTAL TO PAVING ITEMS.

8. THE CONTRACTOR SHALL PROVIDE THE INSPECTORS (CITY AND PRIVATE) WITH THE PROPOSED HYDROSTATIC TESTING PLAN. THE PLAN MUST BE APPROVED BEFORE TESTING OPERATIONS BEGIN.

9. THE CONTRACTOR SHALL PARK EQUIPMENT AND VEHICLES AS NOT TO INTERFERE WITH NORMAL ACTIVITIES OF RESIDENTS OR OTHER CONTRACTORS ON SITE.

10. ANY DAMAGE TO THE EXISTING FACILITIES (CURB, GUTTER, PAVEMENT, CONDUITS, LANDSCAPING, UTILITY LINES, ETC...) DURING CONSTRUCTION SHALL BE REPLACED AT THE CONTRACTORS EXPENSE.

11. REMOVAL OF ANY EXISTING CURB AND GUTTER SHALL BE AS PER COA STD. DWG. 2415 (SAWCUT ONLY).

12. WHEEL CHAIR RAMPS SHALL BE CONSTRUCTED PRIOR TO ACCEPTANCE OF CURB AND GUTTER.

13. THE FOLLOWING PERSONS SHALL BE NOTIFIED AT LEAST TWO BUSINESS DAYS PRIOR TO INSTALLING UTILITY CONDUIT CROSSINGS:

COMPANY	PHONE
PNM.	848-3374
US WEST	245-6694
JONES	761-6200
GAS CO	761-7770

14. FOR RESTRAINED JOINTS, SEE TABLE – SHEET 9 OF 36. (TYP).

15. FIRE HYDRANTS RESTRAINED FROM DISTRIBUTION LINE TO FLANGE (TYP).

KEYED NOTES:

[A] COORDINATE REMOVAL AND REPLACEMENT OF EXISTING SIGNAL BOX w/ C.O.A. TRAFFIC OPERATIONS.

[B] COORDINATE REMOVAL AND RELOCATION OF EXISTING US WEST PEDESTAL w/ US WEST.

AS-BUILT INFORMATION
CONTRACTOR Jaynes Corp. DATE 10/97
STAKED BY BH DATE 10/97
INSPECTOR'S ACCEPTANCE BY BH DATE 10/97
FIELD VERIFICATION BY BH DATE 10/97
DRAWINGS CORRECTED BY BH DATE 10/97
MICROFILM INFORMATION
RECORDED BY DATE
NO.

BENCH MARKS
NGS/ACS ALUMINUM TABLET STAMPED "TUMBLE"
GEOGRAPHIC POSITION (NAD 1927)
N.M. STATE PLANE COORDINATES (CENTRAL ZONE)
X=425,465.55, Y=1,513,470.01
GROUND-TO-GRID FACTOR=0.9996197
$\Delta\alpha$=00° 08' 37"
ELEVATION=6909.155

SURVEY INFORMATION
FIELD NOTES

NO.	BY	DATE

ENGINEER'S SEAL
5-1-97

NO.	DATE	REMARKS	BY
		REVISIONS	
		DESIGN	

DESIGNED BY MSJ DATE 4/29/97
DRAWN BY BES DATE 4/29/97
CHECKED BY JRT DATE 4/29/97

BOHANNAN-HUSTON INC.
ENGINEERS • PLANNERS • PHOTOGRAMMETRISTS • SURVEYORS • LANDSCAPE ARCHITECTS
ALBUQUERQUE LAS CRUCES SANTA FE

CITY OF ALBUQUERQUE
PUBLIC WORKS DEPARTMENT
ENGINEERING DEVELOPMENT GROUP

TITLE: JEWEL OSCO: DEMOLITION PLANS
TENNYSON ST. STA. 1+00.00 – 8+00.00

DESIGN REVIEW COMMITTEE | CITY ENGINEER APPROVAL | LAST DESIGN UPDATE | MO./DAY/YR. | MO./DAY/YR.

RECORD DRAWING
DATE: 11-19-97

SCALE: 1"=50' (HORIZ.) 1"=10' (VERT.)

CITY PROJECT NO.	ZONE MAP NO.	SHEET	OF
562181	E-22	4	36

PROJECT NO.: C96238A2450
FILENAME: 96238\CDP\A2450\DWG\JO_DEMO.DWG
XREFS: SITE.DWG, WORKING1.DWG, JEWEL.DWG

SCANNED BY BY LASON

COPYRIGHT BOHANNAN-HUSTON, INC. 1/97

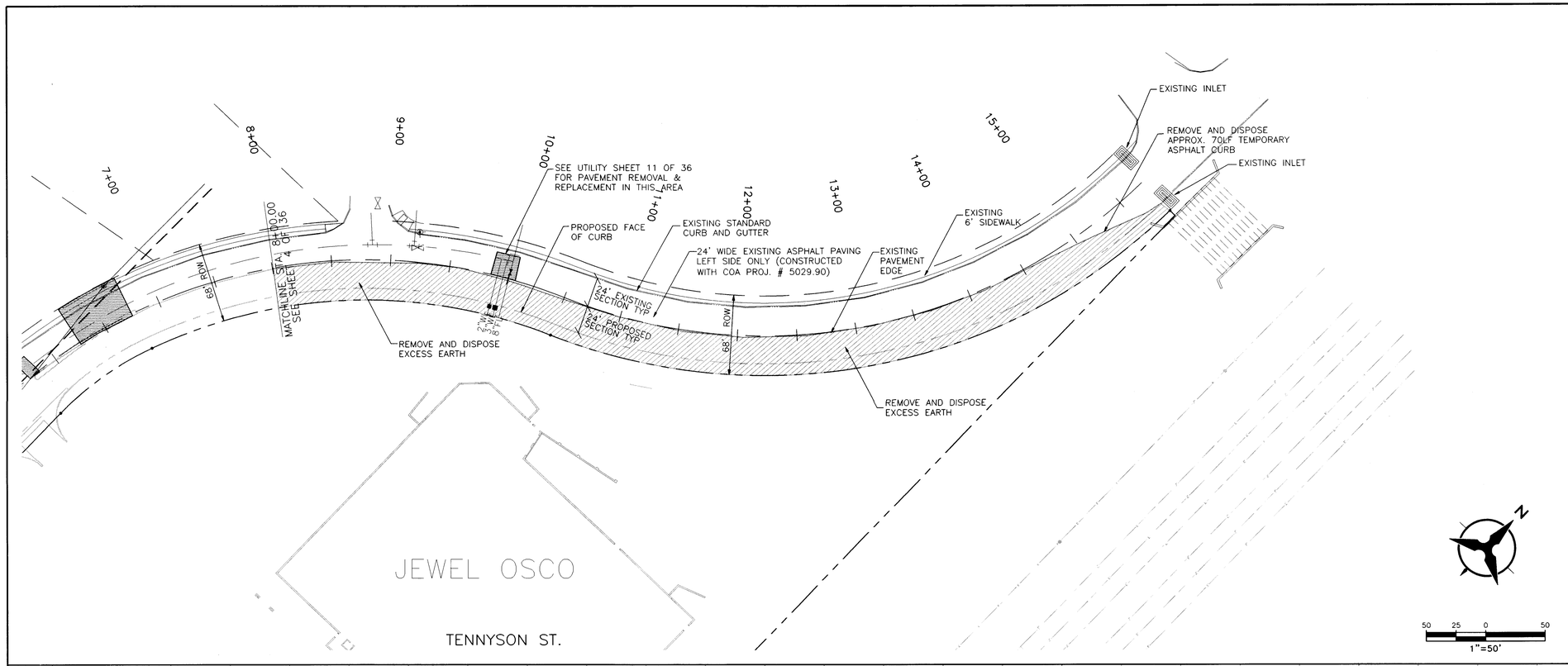

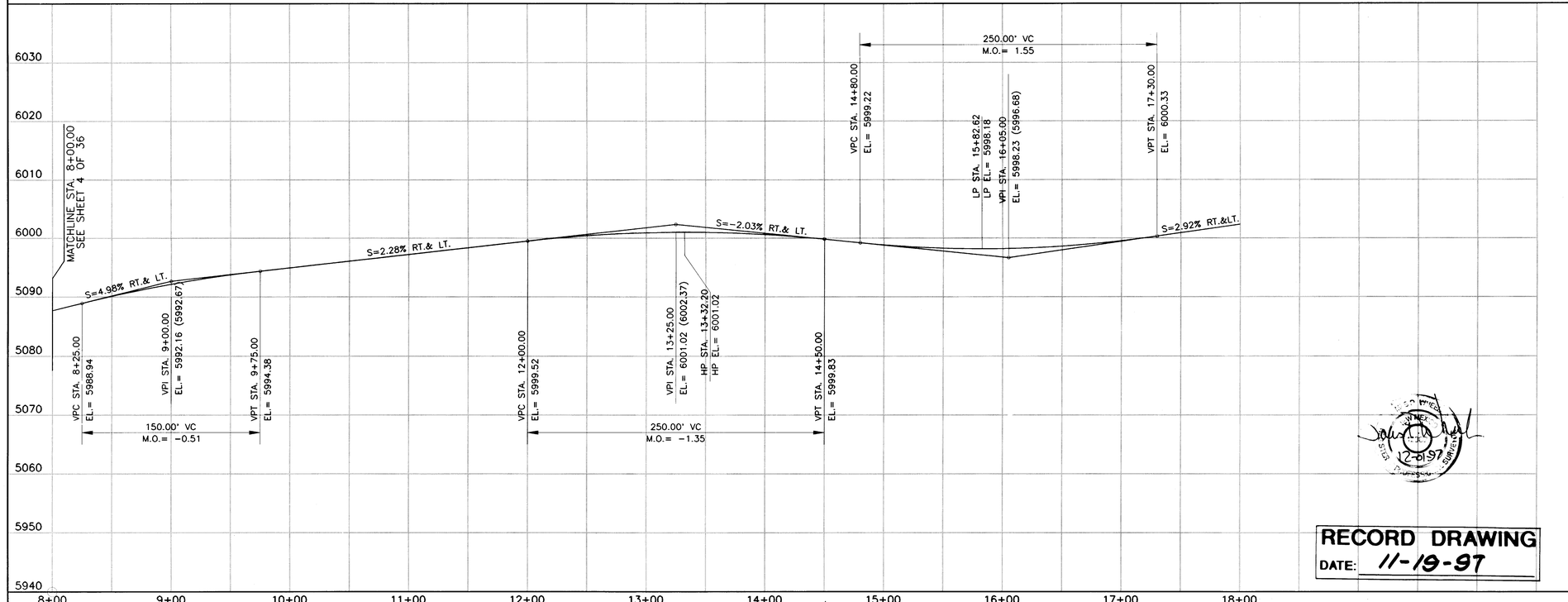

SCALE: 1"=50' (HORIZ.)
1"=10' (VERT.)

RECORD DRAWING
DATE: 11-19-97

NOTES:

1. THE CONTRACTOR SHALL FIELD VERIFY ALL EXISTING UTILITY LOCATIONS AND NOTIFY THE ENGINEER IMMEDIATELY OF ANY DISCREPANCIES.

2. ALL CURB RETURN RADII SHALL BE 25' TO FACE OF CURB UNLESS OTHERWISE SPECIFIED.

3. ALL CURVE DATA AND DIMENSIONS REFER TO FACE OF CURB UNLESS OTHERWISE SPECIFIED.

4. GRADE ELEVATIONS WHERE NOTED ARE FOR TOP OF STANDARD CURB UNLESS OTHERWISE SPECIFIED.

5. THE CONTRACTOR IS TO INSTALL A 4"x4"x5' POST AND EMD AT THE END OF EACH SANITARY SEWER SERVICE.

6. THE CONTRACTOR IS RESPONSIBLE FOR REPAIR AND/OR REPLACEMENT OF ALL UTILITY CONDUITS AND EXISTING LINES.

7. ANY ADDITIONAL GRADING REQUIRED TO MATCH PROPOSED STREET GRADES SHALL BE INCIDENTAL TO PAVING ITEMS.

8. THE CONTRACTOR SHALL PROVIDE THE INSPECTORS (CITY AND PRIVATE) WITH THE PROPOSED HYDROSTATIC TESTING PLAN. THE PLAN MUST BE APPROVED BEFORE TESTING OPERATIONS BEGIN.

9. THE CONTRACTOR SHALL PARK EQUIPMENT AND VEHICLES AS NOT TO INTERFERE WITH NORMAL ACTIVITIES OF RESIDENTS OR OTHER CONTRACTORS ON SITE.

10. ANY DAMAGE TO THE EXISTING FACILITIES (CURB, GUTTER, PAVEMENT, CONDUITS, LANDSCAPING, UTILITY LINES, ETC...) DURING CONSTRUCTION SHALL BE REPLACED AT THE CONTRACTORS EXPENSE.

11. REMOVAL OF ANY EXISTING CURB AND GUTTER SHALL BE AS PER COA STD. DWG. 2415 (SAWCUT ONLY).

12. WHEEL CHAIR RAMPS SHALL BE CONSTRUCTED PRIOR TO ACCEPTANCE OF CURB AND GUTTER.

13. THE FOLLOWING PERSONS SHALL BE NOTIFIED AT LEAST TWO BUSINESS DAYS PRIOR TO INSTALLING UTILITY CONDUIT CROSSINGS:

COMPANY	PHONE
PNM.	848-3374
US WEST	245-6694
JONES	761-6200
GAS CO	761-7770

14. FOR RESTRAINED JOINTS, SEE TABLE – SHEET 9 OF 36. (TYP).

15. FIRE HYDRANTS RESTRAINED FROM DISTRIBUTION LINE TO FLANGE (TYP).

KEYED NOTES:

[A] COORDINATE REMOVAL AND REPLACEMENT OF EXISTING SIGNAL BOX w/ C.O.A. TRAFFIC OPERATIONS.

[B] COORDINATE REMOVAL AND RELOCATION OF EXISTING US WEST PEDESTAL w/ US WEST.

AS-BUILT INFORMATION
CONTRACTOR Jaynes Corp DATE 10/97
WORK STAKED BY BH DATE 10/97
INSPECTOR'S ACCEPTANCE BY BH DATE 10/97
FIELD VERIFICATIONS BY BH DATE 10/97
DRAWINGS CORRECTED BY BH DATE 10/97
MICROFILM INFORMATION
RECORDED BY DATE
NO.

BENCH MARKS
NGS/ACS ALUMINUM TABLET STAMPED "TUMBLE"
GEOGRAPHIC POSITION (NAD 1927)
N.M. STATE PLANE COORDINATES (CENTRAL ZONE)
X=425,465.55, Y=1,513,470.01
GROUND-TO-GRID FACTOR=0.9996197
Δα=00° 08' 37"
ELEVATION=6009.155

SURVEY INFORMATION
FIELD NOTES

NO.	BY	DATE

ENGINEER'S SEAL
5.1.97

NO.	DATE	REMARKS	BY
		REVISIONS	
		DESIGN	

DESIGNED BY MSJ DATE 4/29/97
DRAWN BY BES DATE 4/29/97
CHECKED BY JRT DATE 4/29/97

BOHANNAN-HUSTON INC.
ENGINEERS • PLANNERS • PHOTOGRAMMETRISTS • SURVEYORS • LANDSCAPE ARCHITECTS
ALBUQUERQUE LAS CRUCES SANTA FE

CITY OF ALBUQUERQUE
PUBLIC WORKS DEPARTMENT
ENGINEERING DEVELOPMENT GROUP

TITLE: JEWEL OSCO: DEMOLITION PLANS
TENNYSON ST. STA. 8+00.00 – 15+75.00

DESIGN REVIEW COMMITTEE | CITY ENGINEER APPROVAL | LAST DESIGN UPDATE | MO./DAY/YR. | MO./DAY/YR.

CITY PROJECT NO.	ZONE MAP NO.	SHEET	OF
562181	E-22	5	36

PROJECT NO.: C96238A2450
FILENAME: 96238\CDP\A2450\DWG\JO_DEMO.DWG
:REFS: SITE.DWG, WORKING1.DWG, JEWEL.DWG
SHT3

COPYRIGHT BOHANNAN-HUSTON, INC. 1/97

SCANNED BY B. LASON

① STATION OFFSET DATA

PT.#	STATION	OFFSET	TC ELEV./FL ELEV	DESC.
1	102+02.00	19.00' ± RT.	54.51 ~~54.41~~/~~53.91~~ 54.03	MED
2	102+44.00	13.00' RT.	55.53 ~~55.56~~/~~55.56~~ 55.50	MED
3	102+79.17	7.16' RT.	57.36 ~~57.46~~/~~56.96~~ 56.87	MED
4	105+13.39	3.59' RT.	66.03 ~~65.92~~/~~65.42~~ 65.57	MED
5	105+14.58	7.13' RT.	66.05 ~~65.91~~/~~65.41~~ 65.61	MED
6	108+21.71	19.00' ± RT.	81.82 ~~1+~~/~~81.61~~ 81.75	MED
7	108+63.71	13.00' RT.	84.55 ~~85.10~~/~~84.60~~ 84.13	MED
8	108+89.19	7.91' RT.	86.87 ~~86.06~~/~~86.36~~ 86.39	MED
9	110+06.09	5.04' LT.	93.34 ~~93.40~~/~~92.85~~ 92.84	MED
10	110+05.32	19.00' ± LT.	93.11 ~~1+~~/~~92.81~~ 92.63	MED
11	110+91.57	19.00' ± LT.	97.29 ~~1+~~/~~96.91~~ 97.06	MED
12	110+85.02	6.41' LT.	97.35/~~96.85~~ 97.04	MED
13	~~NOT USED~~	–	97.86/97.56	MED
14	111+37.67	13.52' ± RT.	99.11 ~~2+~~/~~98.81~~ 99.10	MED
15	105+99.03	85.04' LT.	70.61 ~~69.95~~/~~69.28~~ 69.32	STD
16	106+05.40	66.56' LT.	69.42 ~~69.20~~/~~69.18~~ 69.27	WCR
17	106+10.59	61.38' LT.	69.47 ~~69.20~~/~~69.18~~ 69.33	WCR

① STATION OFFSET DATA

PT.#	STATION	OFFSET	TC ELEV./FL ELEV	DESC.
18	106+29.03	55.04' LT.	70.18 ~~70.15~~/~~69.48~~ 69.49	WCR
19	107+29.60	55.03' LT.	75.85 ~~75.60~~/~~74.93~~ 74.82	STD
20	107+71.60	49.03' LT.	78.57 ~~78.46~~/~~77.79~~ 77.93	STD
21	108+13.60	43.02' LT.	81.49 ~~81.81~~/~~81.11~~ 80.80	STD
22	109+94.52	43.00' LT.	92.38 ~~92.21~~/~~91.51~~ 91.69	STD
23	110+21.07	53.08' LT.	93.47 ~~93.67~~/~~93.00~~ 92.80	STD
24	110+26.52	59.00' LT.	93.79 ~~93.40~~/~~93.38~~ 93.10	WCR
25	110+30.24	65.00' LT.	93.93 ~~93.75~~/~~93.52~~ 93.42	WCR
26	110+33.12	72.51' LT.	94.21 ~~94.20~~/~~93.70~~ 93.65	WCR
27	110+34.48	81.18' LT.	94.42/93.92	MED
28	110+77.00	91.58' LT.	96.05 ~~95.97~~/~~96.47~~ 95.52	MED
29	110+86.95	65.50' LT.	96.56 ~~96.53~~/~~96.33~~ 96.46	WCR
30	110+95.68	59.00' LT.	96.74 ~~96.53~~/~~96.53~~ 96.69	WCR
31	111+11.96	54.98' LT.	98.40 ~~97.85~~/~~97.18~~ 97.80	WCR
32	112+06.72	54.97' LT.	101.20 ~~101.65~~/~~00.98~~ 01.26	STD
33	112+48.72	48.97' LT.	02.92 ~~02.75~~/~~02.00~~ 02.30	STD
34	112+90.72	42.96' LT.	03.60 ~~03.81~~/~~03.11~~ 03.12	STD

① STATION OFFSET DATA

PT.#	STATION	OFFSET	TC ELEV./FL ELEV	DESC.
35	105+15.79	45.37' LT.	65.98 ~~65.77~~/~~65.10~~ 65.34	WCR
36	105+20.99	48.39' LT.	66.42 ~~66.43~~/~~65.43~~ 65.52	WCR
37	105+25.14	52.02' LT.	66.81 ~~65.52~~/~~65.50~~ 65.79	WCR
38	105+31.65	62.61' LT.	66.42 ~~66.42~~/~~65.75~~ 65.95	STD

(C1) CURVE DATA

PT.#	RADIUS	LENGTH	DELTA
C1	157.40'	42.56'	15°29'27"
C2	157.40'	42.56'	15°29'27"
C3	157.40'	42.56'	15°29'27"
C4	157.40'	42.56'	15°29'27"
C5	13.00'	40.67'	179°13'50"
C6	10.00'	15.78'	90°24'22"
C7	25.00'	40.79'	93°29'03"
C8	30.00'	47.12'	89°59'33"
C9	150.00'	42.57'	16°15'37"
C10	150.00'	42.57'	16°15'37"
C11	40.00'	61.01'	87°23'44"
C12	35.00'	56.57'	92°36'16"
C13	150.00'	42.57'	16°15'37"
C14	150.00'	42.57'	16°15'37"

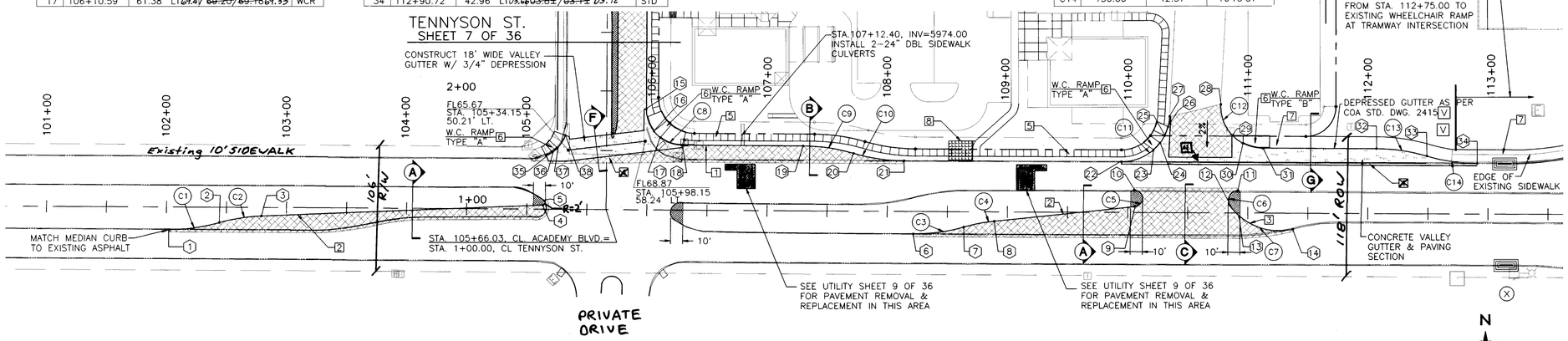

NOTE: FOR X-SECTIONS SEE SHEET 15D OF 36

ACADEMY BLVD.

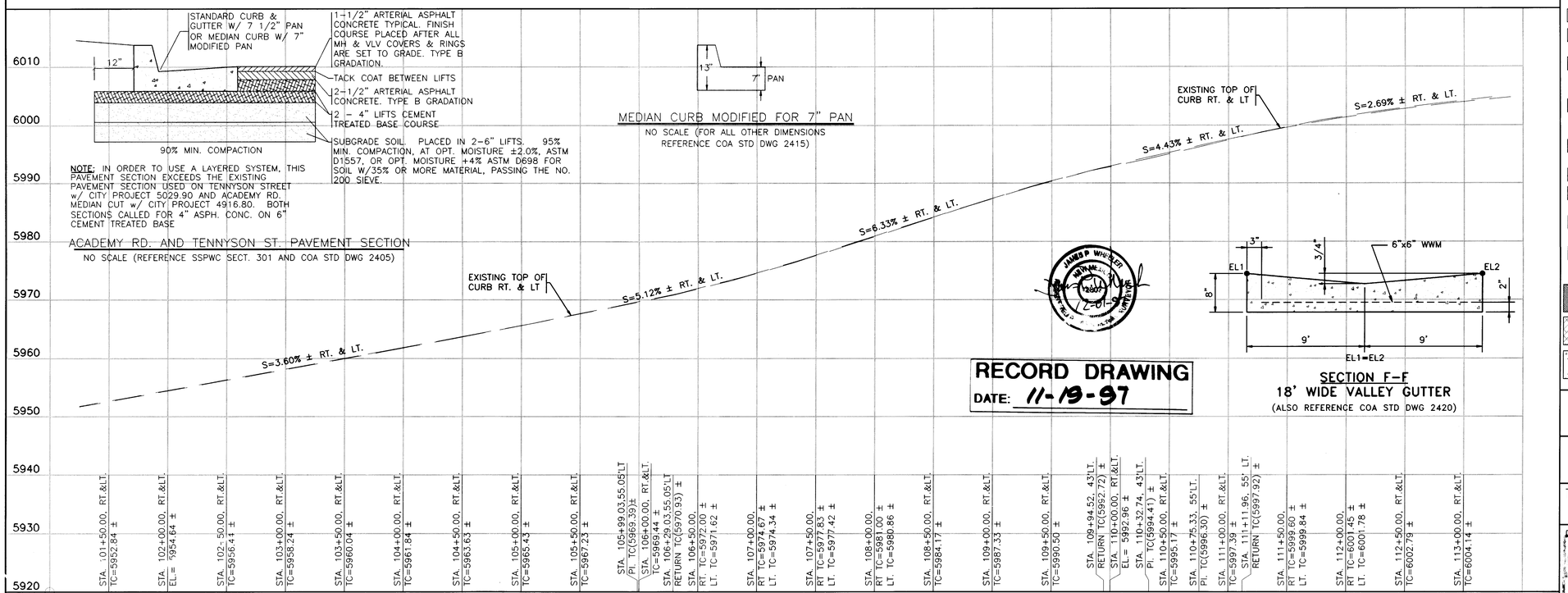

SECTION F-F
18' WIDE VALLEY GUTTER
(ALSO REFERENCE COA STD DWG 2420)

RECORD DRAWING
DATE: 11-19-97

NOTES:

1. THE CONTRACTOR SHALL FIELD VERIFY ALL EXISTING UTILITY LOCATIONS AND NOTIFY THE ENGINEER IMMEDIATELY OF ANY DISCREPANCIES.
2. ALL CURB RETURN RADII SHALL BE 25' TO FACE OF CURB UNLESS OTHERWISE SPECIFIED.
3. ALL CURVE DATA AND DIMENSIONS REFER TO FACE OF CURB UNLESS OTHERWISE SPECIFIED.
4. GRADE ELEVATIONS WHERE NOTED ARE FOR TOP OF STANDARD CURB UNLESS OTHERWISE SPECIFIED.
5. THE CONTRACTOR IS TO INSTALL A 4"x4"x5' POST AND EMD AT THE END OF EACH SANITARY SEWER SERVICE.
6. THE CONTRACTOR IS RESPONSIBLE FOR REPAIR AND/OR REPLACEMENT OF ALL UTILITY CONDUITS AND EXISTING LINES.
7. ANY ADDITIONAL GRADING REQUIRED TO MATCH PROPOSED STREET GRADES SHALL BE INCIDENTAL TO PAVING ITEMS.
8. THE CONTRACTOR SHALL PROVIDE THE INSPECTORS (CITY AND PRIVATE) WITH THE PROPOSED HYDROSTATIC TESTING PLAN. THE PLAN MUST BE APPROVED BEFORE TESTING OPERATIONS BEGIN.
9. THE CONTRACTOR SHALL PARK EQUIPMENT AND VEHICLES AS NOT TO INTERFERE WITH NORMAL ACTIVITIES OF RESIDENTS OR OTHER CONTRACTORS ON SITE.
10. ANY DAMAGE TO THE EXISTING FACILITIES (CURB, GUTTER, PAVEMENT, CONDUITS, LANDSCAPING, UTILITY LINES, ETC...) DURING CONSTRUCTION SHALL BE REPLACED AT THE CONTRACTORS EXPENSE.
11. REMOVAL OF ANY EXISTING CURB AND GUTTER SHALL BE AS PER COA STD. DWG. 2415 (SAWCUT ONLY).
12. WHEEL CHAIR RAMPS SHALL BE CONSTRUCTED PRIOR TO ACCEPTANCE OF CURB AND GUTTER.
13. THE FOLLOWING PERSONS SHALL BE NOTIFIED AT LEAST TWO BUSINESS DAYS PRIOR TO INSTALLING UTILITY CONDUIT CROSSINGS:

COMPANY	PHONE
PNM.	848-3374
US WEST	245-6694
JONES	761-6200
GAS CO	761-7770

14. FOR RESTRAINED JOINTS, SEE TABLE – SHEET 9 OF 36 (TYP).
15. FIRE HYDRANTS RESTRAINED FROM DISTRIBUTION LINE TO FLANGE (TYP).

KEYED GENERAL NOTES

1. CONSTRUCT STD. CURB & GUTTER AS PER STD. DWG. 2415
2. CONSTRUCT MEDIAN CURB & GUTTER ~~AS PER STD. DWG. 2415~~ (EXCEPT USE 7" PAN VS. 6" PAN) **AS PER DETAIL THIS SHEET**
3. CONSTRUCT MOUNTABLE MEDIAN CURB & GUTTER ~~AS PER STD. DWG. 2415~~ (EXCEPT USE 7" PAN VS. 6" PAN) **AS PER DETAIL THIS SHEET**
4. INSTALL CONCRETE VALLEY GUTTER AS PER STD. DWG. 2420 OR 2421
5. BUILD 6' SIDEWALK AS PER COA STD. DWG 2430
6. INSTALL WHEEL CHAIR RAMP PER DETAILS SHEET 15D OF 36
7. BUILD 10' SIDEWALK (WHERE 6' SIDEWALK SECTION EXISTS, BUILD A 4' SIDEWALK SECTION)
8. TYPE "A" BUS SHELTER AND PAD AS PER STD. DWG 2533

TEXTURED COLORED MEDIAN PAVING AS PER STD. DWG. 2408
ARTERIAL-COLLECTOR PAVEMENT SECTION SEE DETAIL THIS SHEET
VALLEY GUTTER SECTION

AS-BUILT INFORMATION
CONTRACTOR Jaynes Corp. DATE 10/97
WORK STAKED BY BH DATE 10/97
INSPECTOR'S ACCEPTANCE BY BH DATE 10/97
FIELD VERIFICATIONS BY BH DATE 10/97
DRAWINGS CORRECTED BY BH DATE 10/97
MICRO-FILM INFORMATION
RECEIVED BY DATE
NO.

BENCH MARKS
NGS/ACS ALUMINUM TABLET STAMPED "TUMBLE"
GEOGRAPHIC POSITION (NAD 1927)
N.M. STATE PLANE COORDINATES (CENTRAL ZONE)
X=425,465.55, Y=1,513,470.01
GROUND-TO-GRID FACTOR=0.9996197
Δα =00° 08' 37"
ELEVATION=6009.155

SURVEY INFORMATION
FIELD NOTES

NO.	BY	DATE

ENGINEER'S SEAL
5-9-97

NO.	DATE	REMARKS	BY
		REVISIONS	
		DESIGN	

DESIGNED BY MSJ DATE 4/29/97
DRAWN BY BES DATE 4/29/97
CHECKED BY JRT DATE 4/29/97

BOHANNAN-HUSTON INC.
ENGINEERS • PLANNERS • PHOTOGRAMMETRISTS • SURVEYORS • LANDSCAPE ARCHITECTS
ALBUQUERQUE LAS CRUCES SANTA FE

CITY OF ALBUQUERQUE
PUBLIC WORKS DEPARTMENT
ENGINEERING DEVELOPMENT GROUP

TITLE: JEWEL OSCO: PAVING PLAN
ACADEMY ROAD STA. 101+50.00 – 113+00.00

DESIGN REVIEW COMMITTEE | CITY ENGINEER APPROVAL | LAST DESIGN UPDATE | MO./DAY/YR. | MO./DAY/YR.

CITY PROJECT NO.	ZONE MAP NO.	SHEET	OF
562181	E-22	6	36

PROJECT NO.: C96238A2450
FILENAME: 96238\CDP\A2450\DWG\JP_PAV.DWG
XREFS: SITE.DWG, WORKING1.DWG, JEWEL.DWG
SHT1

COPYRIGHT BOHANNAN-HUSTON, INC. 1/97

(C1) CURVE DATA

PT.#	RADIUS	LENGTH	DELTA
C1	30.00'	47.12'	89°59'33"
C2	30.00'	46.92'	89°36'17"
C3	30.00'	49.34'	94°13'44"
C4	280.00'	80.09'	16°23'20"
C5	426.00'	353.56'	47°33'10"
C6	1.75'	5.03'	164°31'17"
C7	3.00'	9.42'	180°00'03"
C8	2.00'	6.28'	180°00'01"
C9	302.00'	65.89'	12°30'06"
C10	2.00'	6.28'	180°00'07"
C11	306.00'	66.77'	12°30'06"
C12	2.00'	4.27'	122°19'32"
C13	41.00'	20.47'	28°36'31"
C14	10.00'	10.02'	57°24'51"
C15	20.00'	21.86'	62°38'18"
C16	50.00'	13.51'	15°28'43"

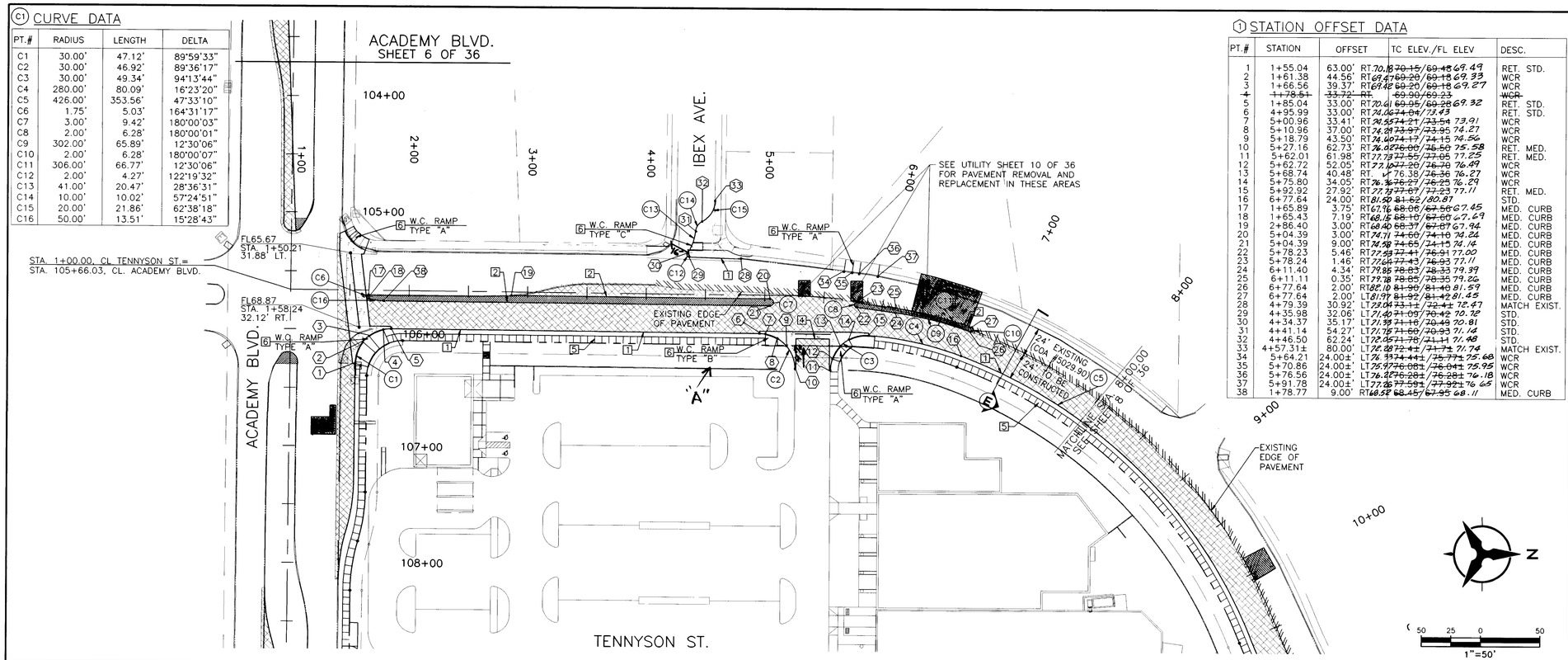

(1) STATION OFFSET DATA

PT.#	STATION	OFFSET	TC ELEV./FL ELEV	DESC.
1	1+55.04	63.00' RT	70.18 ~~70.15~~/~~69.48~~ 69.49	RET. STD.
2	1+61.38	44.56' RT	69.47 ~~69.20~~/~~69.18~~ 69.33	WCR
3	1+66.56	39.37' RT	69.42 ~~69.20~~/~~69.18~~ 69.27	WCR
~~4~~	~~1+78.51~~	~~33.72' RT.~~	~~69.90/69.23~~	~~WCR~~
5	1+85.04	33.00' RT	70.61 ~~69.95~~/~~69.28~~ 69.32	RET. STD.
6	4+95.90	33.00' RT	74.16 ~~74.04~~/73.43	RET. STD.
7	5+00.96	33.41' RT	74.25 ~~74.21~~/~~73.54~~ 73.91	WCR
8	5+10.96	37.00' RT	74.28 ~~73.97~~/~~73.95~~ 74.27	WCR
9	5+18.79	43.50' RT	74.40 ~~74.17~~/~~74.15~~ 74.56	WCR
10	5+27.16	62.73' RT	74.82 ~~74.60~~/~~75.50~~ 75.58	RET. MED.
11	5+62.01	61.98' RT	77.73 ~~77.55~~/~~77.05~~ 77.25	RET. MED.
12	5+62.72	52.05' RT	77.10 ~~77.20~~/~~76.70~~ 76.49	WCR
13	5+68.74	40.48' RT.	76.38 ~~76.36~~ 76.27	WCR
14	5+75.80	34.05' RT	76.36 ~~76.27~~/~~76.25~~ 76.29	WCR
15	5+92.92	27.92' RT	77.73 ~~77.67~~/~~77.23~~ 77.11	RET. MED.
16	6+77.64	24.00' RT	81.50 ~~81.62~~/80.87	STD.
17	1+65.89	3.75' RT	67.76 ~~68.06~~/~~67.56~~ 67.45	MED. CURB
18	1+65.43	7.19' RT	68.15 ~~68.10~~/~~67.60~~ 67.49	MED. CURB
19	2+86.40	3.00' RT	68.40 ~~68.37~~/~~67.87~~ 67.94	MED. CURB
20	5+04.39	3.00' RT	74.71 ~~74.60~~/~~74.10~~ 74.24	MED. CURB
21	5+04.39	9.00' RT	74.58 ~~74.65~~/~~74.15~~ 74.16	MED. CURB
22	5+78.23	5.46' RT	77.59 ~~77.41~~/~~76.91~~ 77.00	MED. CURB
23	5+78.24	1.46' RT	77.61 ~~77.43~~/~~76.93~~ 77.11	MED. CURB
24	6+11.40	4.34' RT	79.85 ~~78.83~~/~~78.33~~ 79.39	MED. CURB
25	6+11.11	0.35' RT	79.28 ~~78.85~~/~~78.35~~ 79.26	MED. CURB
26	6+77.64	2.00' RT	82.10 ~~81.90~~/~~81.40~~ 81.59	MED. CURB
27	6+77.64	2.00' LT	81.97 ~~81.92~~/~~81.42~~ 81.45	MED. CURB
28	4+79.39	30.92' LT	73.04 ~~73.11~~/~~72.41~~ 72.47	MATCH EXIST.
29	4+35.98	32.06' LT	71.40 ~~71.09~~/~~70.42~~ 70.72	STD.
30	4+34.37	35.17' LT	71.38 ~~71.16~~/~~70.49~~ 70.81	STD.
31	4+41.14	54.27' LT	71.75 ~~71.60~~/~~70.93~~ 71.16	STD.
32	4+46.50	62.24' LT	72.05 ~~71.78~~/~~71.11~~ 71.48	STD.
33	4+57.31±	80.00' LT	72.82 ~~72.41~~/~~71.71~~ 71.74	MATCH EXIST.
34	5+64.21	24.00±' LT	76.33 ~~74.44~~/~~75.77~~ 75.68	WCR
35	5+70.86	24.00±' LT	75.93 ~~76.08~~/~~76.04~~ 75.95	WCR
36	5+76.56	24.00±' LT	76.83 ~~76.28~~/~~76.28~~ 76.18	WCR
37	5+91.78	24.00±' LT	77.26 ~~77.59~~/~~77.92~~ 76.65	WCR
38	1+78.77	9.00' RT	68.52 ~~68.45~~/~~67.95~~ 68.11	MED. CURB

NOTES:

1. THE CONTRACTOR SHALL FIELD VERIFY ALL EXISTING UTILITY LOCATIONS AND NOTIFY THE ENGINEER IMMEDIATELY OF ANY DISCREPANCIES.

2. ALL CURB RETURN RADII SHALL BE 25' TO FACE OF CURB UNLESS OTHERWISE SPECIFIED.

3. ALL CURVE DATA AND DIMENSIONS REFER TO FACE OF CURB UNLESS OTHERWISE SPECIFIED.

4. GRADE ELEVATIONS WHERE NOTED ARE FOR TOP OF STANDARD CURB UNLESS OTHERWISE SPECIFIED.

5. THE CONTRACTOR IS TO INSTALL A 4"x4"x5' POST AND EMD AT THE END OF EACH SANITARY SEWER SERVICE.

6. THE CONTRACTOR IS RESPONSIBLE FOR REPAIR AND/OR REPLACEMENT OF ALL UTILITY CONDUITS AND EXISTING LINES.

7. ANY ADDITIONAL GRADING REQUIRED TO MATCH PROPOSED STREET GRADES SHALL BE INCIDENTAL TO PAVING ITEMS.

8. THE CONTRACTOR SHALL PROVIDE THE INSPECTORS (CITY AND PRIVATE) WITH THE PROPOSED HYDROSTATIC TESTING PLAN. THE PLAN MUST BE APPROVED BEFORE TESTING OPERATIONS BEGIN.

9. THE CONTRACTOR SHALL PARK EQUIPMENT AND VEHICLES AS NOT TO INTERFERE WITH NORMAL ACTIVITIES OF RESIDENTS OR OTHER CONTRACTORS ON SITE.

10. ANY DAMAGE TO THE EXISTING FACILITIES (CURB, GUTTER, PAVEMENT, CONDUITS, LANDSCAPING, UTILITY LINES, ETC...) DURING CONSTRUCTION SHALL BE REPLACED AT THE CONTRACTORS EXPENSE.

11. REMOVAL OF ANY EXISTING CURB AND GUTTER SHALL BE AS PER COA STD. DWG. 2415 (SAWCUT ONLY).

12. WHEEL CHAIR RAMPS SHALL BE CONSTRUCTED PRIOR TO ACCEPTANCE OF CURB AND GUTTER.

13. THE FOLLOWING PERSONS SHALL BE NOTIFIED AT LEAST TWO BUSINESS DAYS PRIOR TO INSTALLING UTILITY CONDUIT CROSSINGS:

COMPANY	PHONE
PNM.	848-3374
US WEST	245-6694
JONES	761-6200
GAS CO	761-7770

14. FOR RESTRAINED JOINTS, SEE TABLE – SHEET 9 OF 36 (TYP).

15. FIRE HYDRANTS RESTRAINED FROM DISTRIBUTION LINE TO FLANGE (TYP).

KEYED GENERAL NOTES

1. CONSTRUCT STD. CURB & GUTTER AS PER STD. DWG. 2415
2. CONSTRUCT MEDIAN CURB & GUTTER ~~AS PER STD. DWG. 2415~~ (EXCEPT USE 7" PAN VS. 6" PAN) AS PER DETAIL THIS SHEET
3. CONSTRUCT MOUNTABLE MEDIAN CURB & GUTTER ~~AS PER STD. DWG. 2415~~ (EXCEPT USE 7" PAN VS. 6" PAN) AS PER DETAIL THIS SHEET
4. INSTALL CONCRETE VALLEY GUTTER AS PER STD. DWG. 2420 OR 2421
5. BUILD 6' SIDEWALK AS PER COA STD. DWG 2430
6. INSTALL WHEEL CHAIR RAMP PER DETAILS SHEET 15D OF 36
7. BUILD 10' SIDEWALK (WHERE 6' SIDEWALK SECTION EXISTS, BUILD A 4' SIDEWALK SECTION)
8. TYPE "A" BUS SHELTER AND PAD AS PER STD. DWG 2533

TEXTURED COLORED MEDIAN PAVING AS PER STD. DWG. 2408

ARTERIAL-COLLECTOR PAVEMENT SECTION SEE DETAIL THIS SHEET

VALLEY GUTTER SECTION

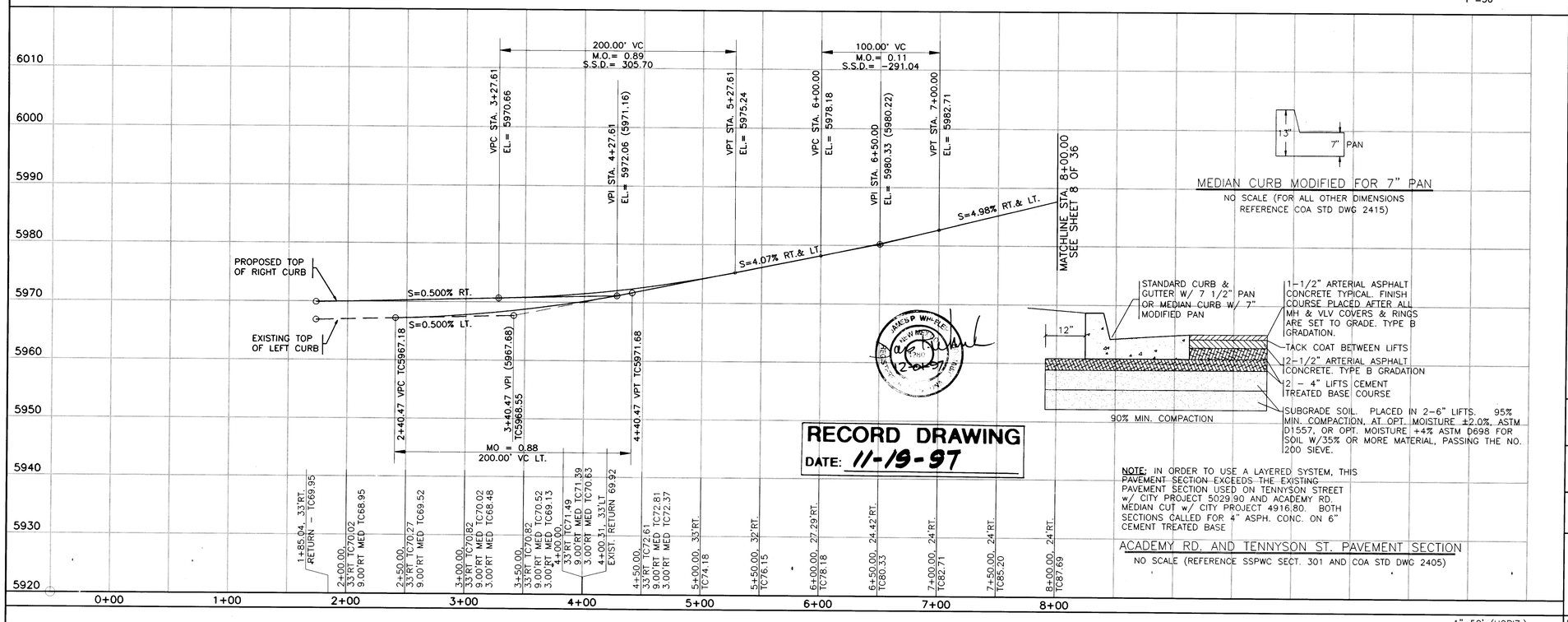

NOTE: IN ORDER TO USE A LAYERED SYSTEM, THIS PAVEMENT SECTION EXCEEDS THE EXISTING PAVEMENT SECTION USED ON TENNYSON STREET w/ CITY PROJECT 5029.90 AND ACADEMY RD. MEDIAN CUT w/ CITY PROJECT 4916.80. BOTH SECTIONS CALLED FOR 4" ASPH. CONC. ON 6" CEMENT TREATED BASE

ACADEMY RD. AND TENNYSON ST. PAVEMENT SECTION

NO SCALE (REFERENCE SSPWC SECT. 301 AND COA STD DWG 2405)

RECORD DRAWING
DATE: 11-19-97

SCALE: 1"=50' (HORIZ.) 1"=10' (VERT.)

AS-BUILT INFORMATION
CONTRACTOR Jaynes Corp DATE 10/97
WORK STAKED BY BH DATE 10/97
INSPECTOR'S AS-BUILT CHANGES BY BH DATE 10/97
FIELD VERIFICATION BY BH DATE 10/97
DRAWINGS CORRECTED BY BH DATE 10/97
MICRO-FILM INFORMATION
RECORDED BY DATE
NO.

BENCH MARKS
NGS/ACS ALUMINUM TABLET STAMPED "TUMBLE"
GEOGRAPHIC POSITION (NAD 1927)
N.M. STATE PLANE COORDINATES (CENTRAL ZONE)
X=425,465.55, Y=1,513,470.01
GROUND-TO-GRID FACTOR=0.9996197
Δα=00° 08' 37"
ELEVATION=6009.155

SURVEY INFORMATION
FIELD NOTES

NO.	BY	DATE

ENGINEER'S SEAL

NO.	DATE	REMARKS	BY
		REVISIONS	
		DESIGN	

DESIGNED BY MSJ DATE 4/29/97
DRAWN BY BES DATE 4/29/97
CHECKED BY JRT DATE 4/29/97

BOHANNAN-HUSTON INC.
ENGINEERS • PLANNERS • PHOTOGRAMMETRISTS • SURVEYORS • LANDSCAPE ARCHITECTS
ALBUQUERQUE LAS CRUCES SANTA FE

CITY OF ALBUQUERQUE
PUBLIC WORKS DEPARTMENT
ENGINEERING DEVELOPMENT GROUP

TITLE: JEWEL OSCO: PAVING PLAN
TENNYSON ST. STA. 1+00.00 – 8+00.00

DESIGN REVIEW COMMITTEE | CITY ENGINEER APPROVAL | LAST DESIGN UPDATE | MO./DAY/YR. | MO./DAY/YR.

CITY PROJECT NO.	ZONE MAP NO.	SHEET	OF
562181	E-22	7	36

PROJECT NO.: C96238A2450
FILENAME: 96238\CDP\A2450\DWG\JP_PAV.DWG
XREFS: SITE.DWG, WORKING1.DWG, JEWEL.DWG
SHT2

SCANNED BY BY LASON

COPYRIGHT BOHANNAN-HUSTON, INC. 1/97

① STATION OFFSET DATA

PT.#	STATION	OFFSET	TC ELEV.	DESC.
1	6+77.64	24.00' RT.	81.62	STD. C&G
2	10+51.12	24.00' RT.	~~96.12~~ 96.49	STD. C&G
3	15+74.96	24.00' RT.	~~98.41~~ 98.03	STD. C&G

(C1) CURVE DATA

PT.#	RADIUS	LENGTH	DELTA
C1	426.00'	353.56'	47°33'10"
C2	474.00'	551.77'	66°41'47"

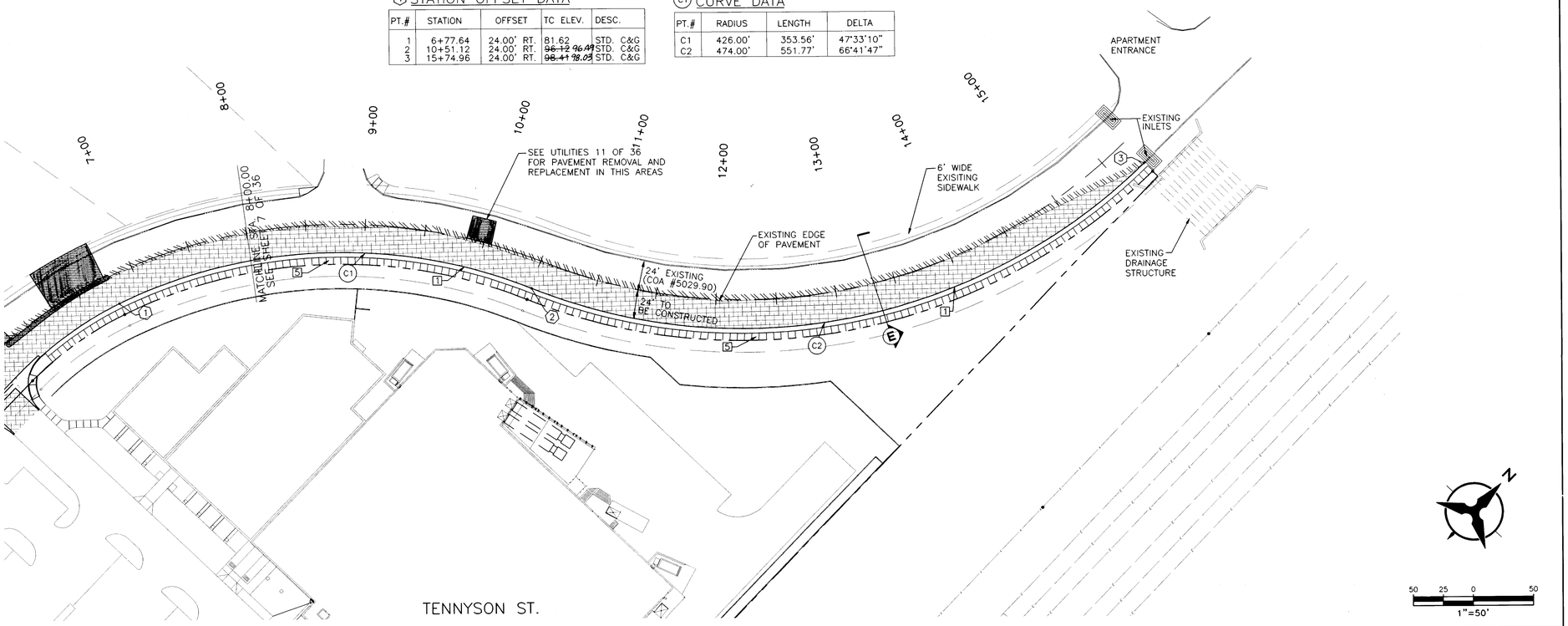

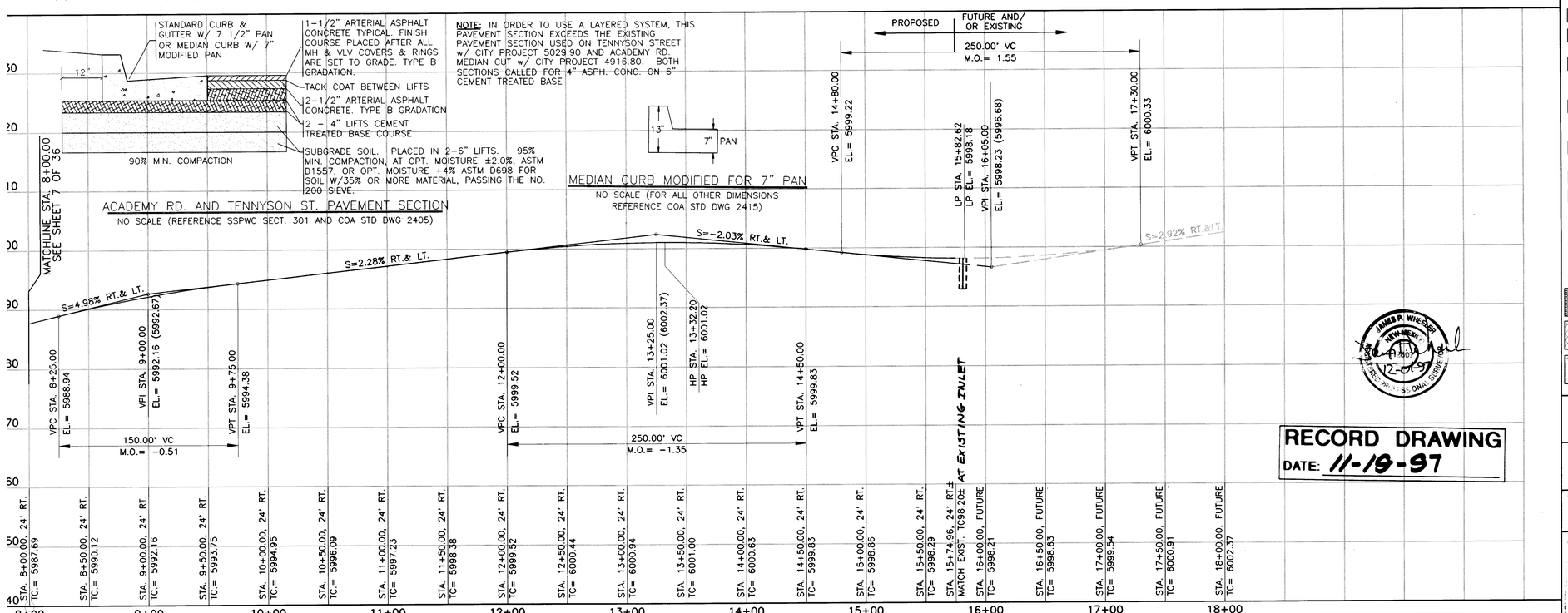

SCALE: 1"=50' (HORIZ.) 1"=10' (VERT.)

NOTES:

1. THE CONTRACTOR SHALL FIELD VERIFY ALL EXISTING UTILITY LOCATIONS AND NOTIFY THE ENGINEER IMMEDIATELY OF ANY DISCREPANCIES.

2. ALL CURB RETURN RADII SHALL BE 25' TO FACE OF CURB UNLESS OTHERWISE SPECIFIED.

3. ALL CURVE DATA AND DIMENSIONS REFER TO FACE OF CURB UNLESS OTHERWISE SPECIFIED.

4. GRADE ELEVATIONS WHERE NOTED ARE FOR TOP OF STANDARD CURB UNLESS OTHERWISE SPECIFIED.

5. THE CONTRACTOR IS TO INSTALL A 4"x4"x5' POST AND EMD AT THE END OF EACH SANITARY SEWER SERVICE.

6. THE CONTRACTOR IS RESPONSIBLE FOR REPAIR AND/OR REPLACEMENT OF ALL UTILITY CONDUITS AND EXISTING LINES.

7. ANY ADDITIONAL GRADING REQUIRED TO MATCH PROPOSED STREET GRADES SHALL BE INCIDENTAL TO PAVING ITEMS.

8. THE CONTRACTOR SHALL PROVIDE THE INSPECTORS (CITY AND PRIVATE) WITH THE PROPOSED HYDROSTATIC TESTING PLAN. THE PLAN MUST BE APPROVED BEFORE TESTING OPERATIONS BEGIN.

9. THE CONTRACTOR SHALL PARK EQUIPMENT AND VEHICLES AS NOT TO INTERFERE WITH NORMAL ACTIVITIES OF RESIDENTS OR OTHER CONTRACTORS ON SITE.

10. ANY DAMAGE TO THE EXISTING FACILITIES (CURB, GUTTER, PAVEMENT, CONDUITS, LANDSCAPING, UTILITY LINES, ETC...) DURING CONSTRUCTION SHALL BE REPLACED AT THE CONTRACTORS EXPENSE.

11. REMOVAL OF ANY EXISTING CURB AND GUTTER SHALL BE AS PER COA STD. DWG. 2415 (SAWCUT ONLY).

12. WHEEL CHAIR RAMPS SHALL BE CONSTRUCTED PRIOR TO ACCEPTANCE OF CURB AND GUTTER.

13. THE FOLLOWING PERSONS SHALL BE NOTIFIED AT LEAST TWO BUSINESS DAYS PRIOR TO INSTALLING UTILITY CONDUIT CROSSINGS:

COMPANY	PHONE
PNM.	848-3374
US WEST	245-6694
JONES	761-6200
GAS CO	761-7770

14. FOR RESTRAINED JOINTS, SEE TABLE - SHEET 9 OF 36 (TYP).

15. FIRE HYDRANTS RESTRAINED FROM DISTRIBUTION LINE TO FLANGE (TYP).

KEYED GENERAL NOTES

1. CONSTRUCT STD. CURB & GUTTER AS PER STD. DWG. 2415
2. CONSTRUCT MEDIAN CURB & GUTTER ~~AS PER STD. DWG. 2415~~ (EXCEPT USE 7" PAN VS. 6" PAN) **AS PER DETAIL THIS SHEET**
3. CONSTRUCT MOUNTABLE MEDIAN CURB & GUTTER ~~AS PER STD. DWG. 2415~~ (EXCEPT USE 7" PAN VS. 6" PAN) **AS PER DETAIL THIS SHEET**
4. INSTALL CONCRETE VALLEY GUTTER AS PER STD. DWG. 2420 OR 2421
5. BUILD 6' SIDEWALK AS PER COA STD. DWG 2430
6. INSTALL WHEEL CHAIR RAMP PER DETAILS SHEET 15D OF 36
7. BUILD 10' SIDEWALK (WHERE 6' SIDEWALK SECTION EXISTS, BUILD A 4' SIDEWALK SECTION)
8. TYPE "A" BUS SHELTER AND PAD AS PER STD. DWG 2533

TEXTURED COLORED MEDIAN PAVING AS PER STD. DWG. 2408

ARTERIAL-COLLECTOR PAVEMENT SECTION SEE DETAIL THIS SHEET

VALLEY GUTTER SECTION

JAMES P. WHEELER NEW MEXICO 7980 PROFESSIONAL ENGINEER 12-01-97

RECORD DRAWING
DATE: 11-19-97

AS-BUILT INFORMATION
CONTRACTOR Taynes Corp DATE 10/97
WORK STAKED BY BH DATE 10/97
STAKING CHECKED FOR ACCEPTANCE BY BH DATE 10/97
FIELD VERIFICATION BY BH DATE 10/97
DRAWINGS CORRECTED BY BH DATE 10/97
MICRO-FILM INFORMATION
RECORDED BY DATE
NO. DATE

BENCH MARKS
NGS/ACS ALUMINUM TABLET STAMPED "TUMBLE"
GEOGRAPHIC POSITION (NAD 1927)
N.M. STATE PLANE COORDINATES (CENTRAL ZONE)
X=425,465.55, Y=1,513,470.01
GROUND-TO-GRID FACTOR=0.9996197
Δα=00° 08' 37"
ELEVATION=6009.155

SURVEY INFORMATION
FIELD NOTES
NO. BY DATE

ENGINEER'S SEAL
Rick Smith 5-1-97

REMARKS
REVISIONS
DESIGN
NO. DATE BY
DESIGNED BY MSJ DATE 4/29/97
DRAWN BY BES DATE 4/29/97
CHECKED BY JRT DATE 4/29/97

BOHANNAN-HUSTON INC.
ENGINEERS • PLANNERS • PHOTOGRAMMETRISTS • SURVEYORS • LANDSCAPE ARCHITECTS
ALBUQUERQUE LAS CRUCES SANTA FE

CITY OF ALBUQUERQUE
PUBLIC WORKS DEPARTMENT
ENGINEERING DEVELOPMENT GROUP

TITLE: JEWEL OSCO: PAVING PLAN
TENNYSON ST. STA. 8+00 - 15+75.00

DESIGN REVIEW COMMITTEE | CITY ENGINEER APPROVAL | LAST DESIGN UPDATE | MO./DAY/YR. | MO./DAY/YR.

CITY PROJECT NO.	ZONE MAP NO.	SHEET	OF
562181	E-22	8	36

PROJECT NO.: C96238A2450
FILENAME: 96238\CDP\A2450\DWG\JP_PAV.DWG
XREFS: SITE.DWG, WORKING1.DWG, JEWEL.DWG

SCANNED BY BY LASON

COPYRIGHT BOHANNAN-HUSTON, INC. 1/97

UTILITY KEYED NOTES

CONTRACTOR SHALL ..

- (A) INSTALL 1-4' SANITARY SEWER SERVICE AS PER C.O.A. STD. DWG 2125
- (B) INSTALL 1-4' SANITARY SEWER SERVICE PLUG AND EMD AS PER C.O.A. STD. DWG 2125
- (C) INSTALL 1-4' DIA. TYPE "E" MANHOLE AS PER C.O.A. STD. DWG 2102
- (D) INSTALL 1-1" WATER SERVICE w/TAPPING SADDLE AS PER C.O.A. STD. DWG 2362
- (E) INSTALL 1-1" WATER METER BOX AS PER C.O.A. STD. DWG 2362 & 2366
- (F) PLUG OR CAP 1" WATER SERVICE LINE
- (G) PRESSURE CONNECTION : INSTALL 1 - 12"X4" TAPPING SLEEVE AND VALVE w/TYPE "B" MODIFIED BOX AND LID
- (H) INSTALL 4" PVC C-900 FIRE LINE
- (I) PLUG OR CAP 4" PVC FIRE LINE
- (J) PRESSURE CONNECTION : INSTALL 1 - 12"X6" TAPPING SLEEVE AND VALVE w/TYPE "B" MODIFIED BOX AND LID
- (K) INSTALL 6" PVC C-900 FIRE LINE
- (L) PLUG OR CAP 6" PVC FIRE LINE w/BLOCKING
- (M) STUB OUT AND PLUG 8" SDR-35 PVC SANITARY SEWER
- (N) BUILD 1-4' TEE MH w/FIELD CONNECTION. SEE DETAIL SHEET 15 OF 33
- (O) INSTALL 691.F 36" RCP IV STORM DRAIN @ S=15.0% INV.ELEV @ STUBOUT = 70.70
- (P) INSTALL 1-2" WATER SERVICE w/TAPPING SADDLE AS PER C.O.A. STD. DWG 2363
- (Q) INSTALL 1-2" WATER METER BOX AS PER C.O.A. STD. DWG 2367
- (R) PLUG OR CAP 2" WATER SERVICE LINE
- (S) INSTALL 1 - 12"X4" TAPPING SLEEVE AND VALVE w/TYPE "B" MODIFIED BOX AND LID. INSTALL 1 - 4"X3" REDUCER
- (T) INSTALL 1 - TYPE "B" WATER METER PIT FOR 3" WATER SERVICE AS PER C.O.A. STD. DWG 2370
- (U) PLUG OR CAP 3" WATER SERVICE LINE
- (V) INSTALL 1 - 12"X8" TAPPING SLEEVE AND VALVE w/TYPE "B" BOX AND LID
- (W) INSTALL 8" C-900 PVC FIRE LINE
- (X) INSTALL 1 - 8" CAP w/BLOCKING

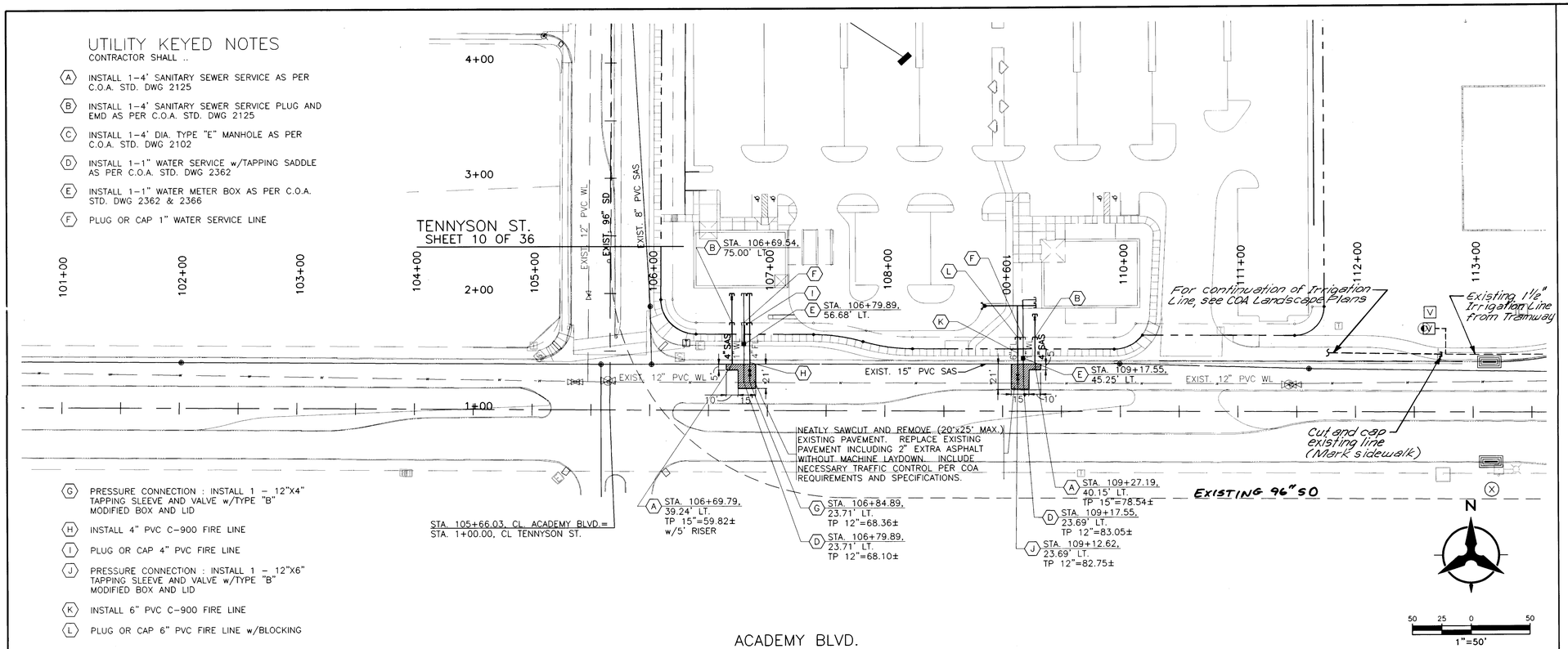

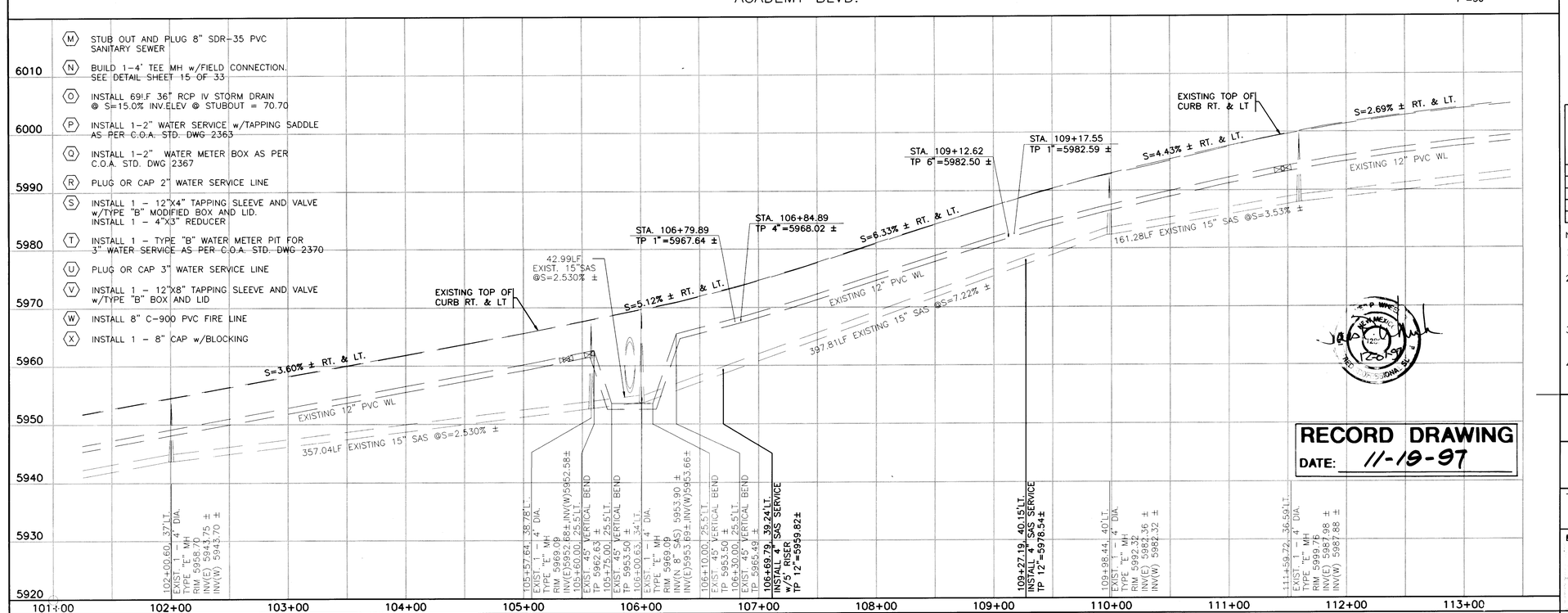

NOTES:

1. THE CONTRACTOR SHALL FIELD VERIFY ALL EXISTING UTILITY LOCATIONS AND NOTIFY THE ENGINEER IMMEDIATELY OF ANY DISCREPANCIES.
2. ALL CURB RETURN RADII SHALL BE 25' TO FACE OF CURB UNLESS OTHERWISE SPECIFIED.
3. ALL CURVE DATA AND DIMENSIONS REFER TO FACE OF CURB UNLESS OTHERWISE SPECIFIED.
4. GRADE ELEVATIONS WHERE NOTED ARE FOR TOP OF STANDARD CURB UNLESS OTHERWISE SPECIFIED.
5. THE CONTRACTOR IS TO INSTALL A 4"x4"x5' POST AND EMD AT THE END OF EACH SANITARY SEWER SERVICE.
6. THE CONTRACTOR IS RESPONSIBLE FOR REPAIR AND/OR REPLACEMENT OF ALL UTILITY CONDUITS AND EXISTING LINES.
7. ANY ADDITIONAL GRADING REQUIRED TO MATCH PROPOSED STREET GRADES SHALL BE INCIDENTAL TO PAVING ITEMS.
8. THE CONTRACTOR SHALL PROVIDE THE INSPECTORS (CITY AND PRIVATE) WITH THE PROPOSED HYDROSTATIC TESTING PLAN. THE PLAN MUST BE APPROVED BEFORE TESTING OPERATIONS BEGIN.
9. THE CONTRACTOR SHALL PARK EQUIPMENT AND VEHICLES AS NOT TO INTERFERE WITH NORMAL ACTIVITIES OF RESIDENTS OR OTHER CONTRACTORS ON SITE.
10. ANY DAMAGE TO THE EXISTING FACILITIES (CURB, GUTTER, PAVEMENT, CONDUITS, LANDSCAPING, UTILITY LINES, ETC...) DURING CONSTRUCTION SHALL BE REPLACED AT THE CONTRACTORS EXPENSE.
11. REMOVAL OF ANY EXISTING CURB AND GUTTER SHALL BE AS PER COA STD. DWG. 2415 (SAWCUT ONLY).
12. WHEEL CHAIR RAMPS SHALL BE CONSTRUCTED PRIOR TO ACCEPTANCE OF CURB AND GUTTER.
13. THE FOLLOWING PERSONS SHALL BE NOTIFIED AT LEAST TWO BUSINESS DAYS PRIOR TO INSTALLING UTILITY CONDUIT CROSSINGS:

COMPANY	PHONE
PNM.	848-3374
US WEST	245-6694
JONES	761-6200
GAS CO	761-7770

14. FOR RESTRAINED JOINTS, SEE TABLE THIS SHEET.
15. FIRE HYDRANTS RESTRAINED FROM DISTRIBUTION LINE TO FLANGE (TYP).

MATERIALS:

SAS LINE: SDR-35 PVC
WATER LINE: C900-PVC

RESTRAINED JOINT TABLE

MECHANICAL JOINTS	LENGTH OF RESTRAINED JOINTS (6")	(8")	(10")	
11.25° H. BEND	2'	3'	3'	
22.50° H. BEND	4'	5'	6'	
45° H. BEND	8'	11'	13'	
90° H. BEND	20'	26'	31'	
GATE VALVE/CAP	55'	72'	86'	

NOTE:

1. ALL MECHANICAL JOINTS SHALL BE RESTRAINED AT THE FITTING.
2. THE CONTRACTOR SHALL PROVIDE A MINIMUM PIPE LENGTH OF 20 LF FROM ALL MECHANICAL JOINTS. UNLESS SPECIFIED DIFFERENTLY IN THE PLANS. ALL PIPE JOINTS WITHIN 20 LF OF A MJ SHALL BE RESTRAINED AT THE CONTRACTOR'S EXPENSE.
3. THE CONTRACTOR SHALL RESTRAIN ALL PIPE JOINTS IN THE SPECIFIED DISTANCE LISTED IN THE TABLE ABOVE. (SEE NOTE 5 ABOVE)
4. THE CONTRACTOR SHALL RESTRAIN ALL FIRE HYDRANT JOINTS FROM THE TEE ON THE MAIN TO THE FIRE HYDRANT FLANGE.

RECORD DRAWING
DATE: 11-19-97

AS-BUILT INFORMATION
CONTRACTOR Haynes Corp DATE 10/97
WORK STAKED BY BH DATE 10/97
WORK INSPECTED BY BH DATE 10/97
ACCEPTANCE BY BH DATE 10/97
FIELD VERIFICATION BY BH DATE 10/97
DRAWINGS CORRECTED BY BH DATE 10/97
MICRO-FILM INFORMATION
RECORDED BY DATE
NO.

BENCH MARKS
NGS/ACS ALUMINUM TABLET STAMPED "TUMBLE"
GEOGRAPHIC POSITION (NAD 1927)
N.M. STATE PLANE COORDINATES (CENTRAL ZONE)
X=425,465.55, Y=1,513,470.01
GROUND-TO-GRID FACTOR=0.9996197
Δα=00° 08' 37"
ELEVATION=6009.155

SURVEY INFORMATION
FIELD NOTES

NO.	BY	DATE

ENGINEER'S SEAL
8-1-97

NO.	DATE	REMARKS REVISIONS DESIGN	BY

DESIGNED BY MSJ DATE 4/29/97
DRAWN BY BES DATE 4/29/97
CHECKED BY JRT DATE 4/29/97

BOHANNAN-HUSTON INC.
ENGINEERS • PLANNERS • PHOTOGRAMMETRISTS • SURVEYORS • LANDSCAPE ARCHITECTS
ALBUQUERQUE LAS CRUCES SANTA FE

CITY OF ALBUQUERQUE
PUBLIC WORKS DEPARTMENT
ENGINEERING DEVELOPMENT GROUP

TITLE: JEWEL OSCO: UTILITY PLANS
ACADEMY RD STA. 101+50.00 - 113+00.00

DESIGN REVIEW COMMITTEE | CITY ENGINEER APPROVAL | LAST DESIGN UPDATE | MO./DAY/YR. | MO./DAY/YR.

CITY PROJECT NO. 562181 | ZONE MAP NO. E-22 | SHEET 9 OF 36

PLANNED BY BYTASON

PROJECT NO.: C96238A2450
FILENAME: 96238\CDP\A2450\DWG\JO_WUTIL.DWG
XREFS: SITE.DWG, WORKING1.DWG
SHT1

COPYRIGHT BOHANNAN-HUSTON, INC. 1/97

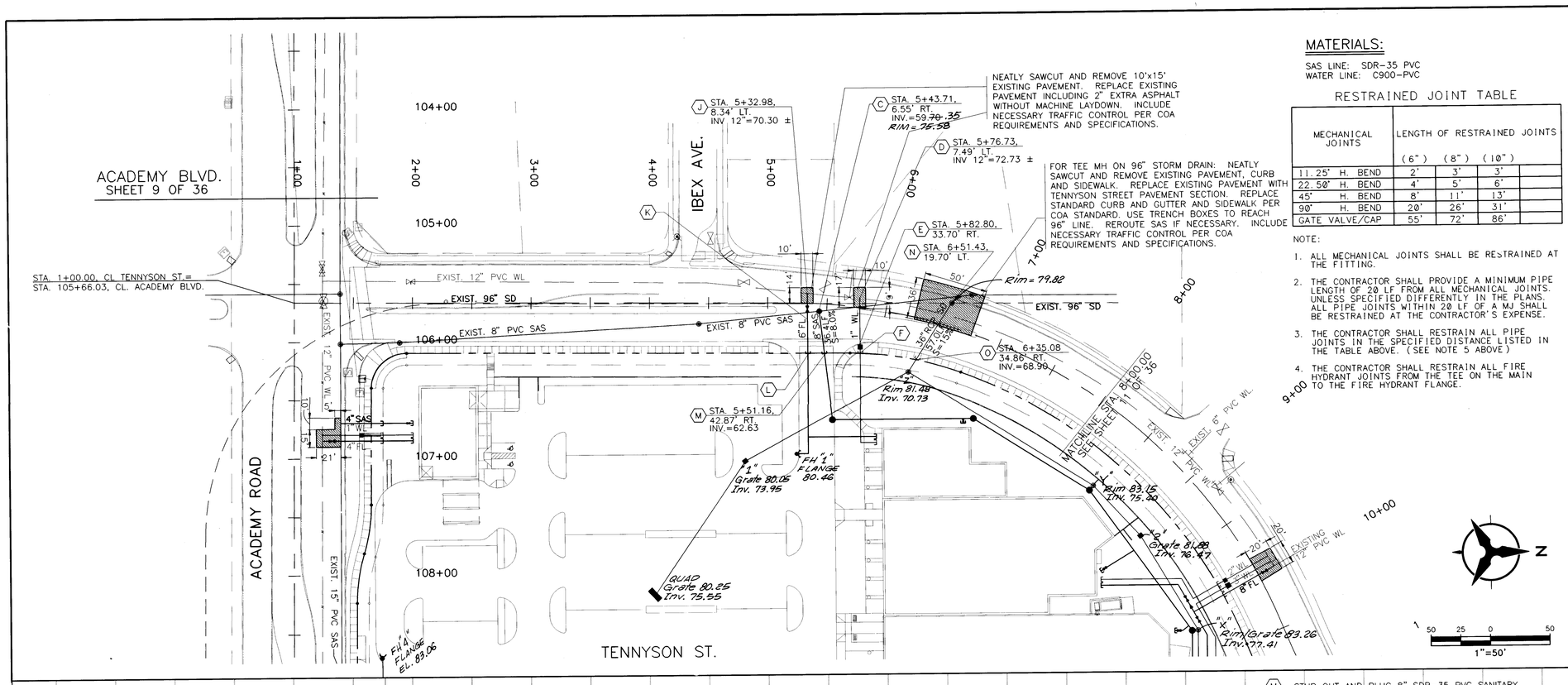

MATERIALS:

SAS LINE: SDR-35 PVC
WATER LINE: C900-PVC

RESTRAINED JOINT TABLE

MECHANICAL JOINTS	LENGTH OF RESTRAINED JOINTS (6")	(8")	(10")	
11.25° H. BEND	2'	3'	3'	
22.50° H. BEND	4'	5'	6'	
45° H. BEND	8'	11'	13'	
90° H. BEND	20'	26'	31'	
GATE VALVE/CAP	55'	72'	86'	

NOTE:

1. ALL MECHANICAL JOINTS SHALL BE RESTRAINED AT THE FITTING.
2. THE CONTRACTOR SHALL PROVIDE A MINIMUM PIPE LENGTH OF 20 LF FROM ALL MECHANICAL JOINTS. UNLESS SPECIFIED DIFFERENTLY IN THE PLANS. ALL PIPE JOINTS WITHIN 20 LF OF A MJ SHALL BE RESTRAINED AT THE CONTRACTOR'S EXPENSE.
3. THE CONTRACTOR SHALL RESTRAIN ALL PIPE JOINTS IN THE SPECIFIED DISTANCE LISTED IN THE TABLE ABOVE. (SEE NOTE 5 ABOVE)
4. THE CONTRACTOR SHALL RESTRAIN ALL FIRE HYDRANT JOINTS FROM THE TEE ON THE MAIN TO THE FIRE HYDRANT FLANGE.

NOTES:

1. THE CONTRACTOR SHALL FIELD VERIFY ALL EXISTING UTILITY LOCATIONS AND NOTIFY THE ENGINEER IMMEDIATELY OF ANY DISCREPANCIES.
2. ALL CURB RETURN RADII SHALL BE 25' TO FACE OF CURB UNLESS OTHERWISE SPECIFIED.
3. ALL CURVE DATA AND DIMENSIONS REFER TO FACE OF CURB UNLESS OTHERWISE SPECIFIED.
4. GRADE ELEVATIONS WHERE NOTED ARE FOR TOP OF STANDARD CURB UNLESS OTHERWISE SPECIFIED.
5. THE CONTRACTOR IS TO INSTALL A 4"x4"x5' POST AND EMD AT THE END OF EACH SANITARY SEWER SERVICE.
6. THE CONTRACTOR IS RESPONSIBLE FOR REPAIR AND/OR REPLACEMENT OF ALL UTILITY CONDUITS AND EXISTING LINES.
7. ANY ADDITIONAL GRADING REQUIRED TO MATCH PROPOSED STREET GRADES SHALL BE INCIDENTAL TO PAVING ITEMS.
8. THE CONTRACTOR SHALL PROVIDE THE INSPECTORS (CITY AND PRIVATE) WITH THE PROPOSED HYDROSTATIC TESTING PLAN. THE PLAN MUST BE APPROVED BEFORE TESTING OPERATIONS BEGIN.
9. THE CONTRACTOR SHALL PARK EQUIPMENT AND VEHICLES AS NOT TO INTERFERE WITH NORMAL ACTIVITIES OF RESIDENTS OR OTHER CONTRACTORS ON SITE.
10. ANY DAMAGE TO THE EXISTING FACILITIES (CURB, GUTTER, PAVEMENT, CONDUITS, LANDSCAPING, UTILITY LINES, ETC...) DURING CONSTRUCTION SHALL BE REPLACED AT THE CONTRACTORS EXPENSE.
11. REMOVAL OF ANY EXISTING CURB AND GUTTER SHALL BE AS PER COA STD. DWG. 2415 (SAWCUT ONLY).
12. WHEEL CHAIR RAMPS SHALL BE CONSTRUCTED PRIOR TO ACCEPTANCE OF CURB AND GUTTER.
13. THE FOLLOWING PERSONS SHALL BE NOTIFIED AT LEAST TWO BUSINESS DAYS PRIOR TO INSTALLING UTILITY CONDUIT CROSSINGS:

COMPANY	PHONE
PNM.	848-3374
US WEST	245-6694
JONES	761-6200
GAS CO	761-7770

14. FOR RESTRAINED JOINTS, SEE TABLE THIS SHEET.
15. FIRE HYDRANTS RESTRAINED FROM DISTRIBUTION LINE TO FLANGE (TYP).

(A) INSTALL 1-4' SANITARY SEWER SERVICE AS PER C.O.A. STD. DWG 2125
(B) INSTALL 1-4' SANITARY SEWER SERVICE PLUG AND EMD AS PER C.O.A. STD. DWG 2125
(C) INSTALL 1-4' DIA. TYPE "E" MANHOLE AS PER C.O.A. STD. DWG 2102
(D) INSTALL 1-1" WATER SERVICE w/TAPPING SADDLE AS PER C.O.A. STD. DWG 2362
(E) INSTALL 1-1" WATER METER BOX AS PER C.O.A. STD. DWG 2362 & 2366
(F) PLUG OR CAP 1" WATER SERVICE LINE
(G) PRESSURE CONNECTION : INSTALL 1 - 12"X4" TAPPING SLEEVE AND VALVE w/TYPE "B" MODIFIED BOX AND LID
(H) INSTALL 4" PVC C-900 FIRE LINE
(I) PLUG OR CAP 4" PVC FIRE LINE
(J) PRESSURE CONNECTION : INSTALL 1 - 12"X6" TAPPING SLEEVE AND VALVE w/TYPE "B" MODIFIED BOX AND LID
(K) INSTALL 6" PVC C-900 FIRE LINE
(L) PLUG OR CAP 6" PVC FIRE LINE w/BLOCKING
(M) STUB OUT AND PLUG 8" SDR-35 PVC SANITARY SEWER @ S=8.0% INV ELEV @ STUBOUT = 62.63
(N) BUILD 1-4' TEE MH w/FIELD CONNECTION. SEE DETAIL SHT 15A OF 36. USE OF TRENCH BOXES WILL BE REQUIRED
(O) INSTALL 57LF 36" RCP IV STORM DRAIN @ S=15.0% INV.ELEV @ STUBOUT = 68.90
(P) INSTALL 1-2" WATER SERVICE w/TAPPING SADDLE AS PER C.O.A. STD. DWG 2363
(Q) INSTALL 1-2" WATER METER BOX AS PER C.O.A. STD. DWG 2367
(R) PLUG OR CAP 2" WATER SERVICE LINE
(S) INSTALL 1 - 12"X4" TAPPING SLEEVE AND VALVE w/TYPE "B" MODIFIED BOX AND LID. INSTALL 1 - 4"X3" REDUCER
(T) INSTALL 1 - TYPE "B" WATER METER PIT FOR 3" WATER SERVICE AS PER C.O.A. STD. DWG 2370
(U) PLUG OR CAP 3" WATER SERVICE LINE
(V) INSTALL 1 - 12"X8" TAPPING SLEEVE AND VALVE w/TYPE "B" BOX AND LID
(W) INSTALL 8" C-900 PVC FIRE LINE
(X) INSTALL 1 - 8" CAP w/BLOCKING

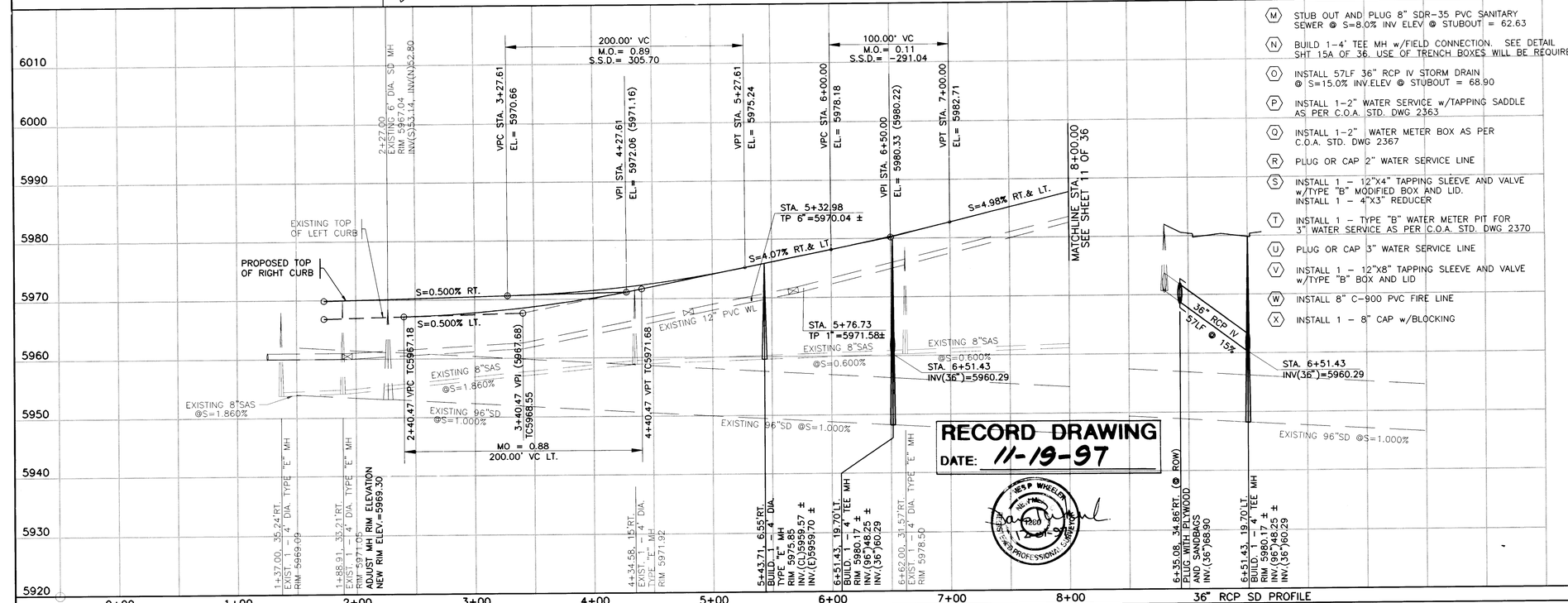

SCALE: 1"=50' (HORIZ.) 1"=10' (VERT.)

RECORD DRAWING
DATE: 11-19-97

JESS P. WHEELER NM PLS 7269 PROFESSIONAL SURVEYOR

AS-BUILT INFORMATION		
CONTRACTOR Jaynes Corp.	DATE 10/97	
WORK INSPECTOR'S ACCEPTANCE BY BH	DATE 10/97	
VERIFICATION BY BH	DATE 10/97	
DRAWINGS COMPLETED BY BH	DATE 10/97	
MICRO-FILM INFORMATION		
REC'RDED BY	DATE	
NO.		

BENCH MARKS
NGS/ACS ALUMINUM TABLET STAMPED "TUMBLE"
GEOGRAPHIC POSITION (NAD 1927)
N.M. STATE PLANE COORDINATES (CENTRAL ZONE)
X=425,465.55, Y=1,513,470.01
GROUND-TO-GRID FACTOR=0.9996197
Δα=00° 08' 37"
ELEVATION=6009.155

SURVEY INFORMATION
FIELD NOTES

NO.	BY	DATE

ENGINEER'S SEAL
5-1-97

NO.	DATE	REMARKS	BY
		REVISIONS	
		DESIGN	

DESIGNED BY MSJ DATE 4/29/97
DRAWN BY BES DATE 4/29/97
CHECKED BY JRT DATE 4/29/97

BOHANNAN-HUSTON INC.
ENGINEERS • PLANNERS • PHOTOGRAMMETRISTS • SURVEYORS • LANDSCAPE ARCHITECTS
ALBUQUERQUE LAS CRUCES SANTA FE

CITY OF ALBUQUERQUE
PUBLIC WORKS DEPARTMENT
ENGINEERING DEVELOPMENT GROUP

TITLE: JEWEL OSCO: UTILITY PLANS
TENNYSON ST. STA. 1+00.00 - 8+00.00

DESIGN REVIEW COMMITTEE | CITY ENGINEER APPROVAL | LAST DESIGN UPDATE | MO./DAY/YR. | MO./DAY/YR.

CITY PROJECT NO. 562181 | ZONE MAP NO. E-22 | SHEET 10 OF 36

PROJECT NO.: C96238A2450
FILENAME: 96238\CDP\A2450\DWG\JO_WUTIL.DWG
XREFS: SITE.DWG, WORKING1.DWG
SHT2

SCANNED BY LASON

COPYRIGHT BOHANNAN-HUSTON, INC. 1/97

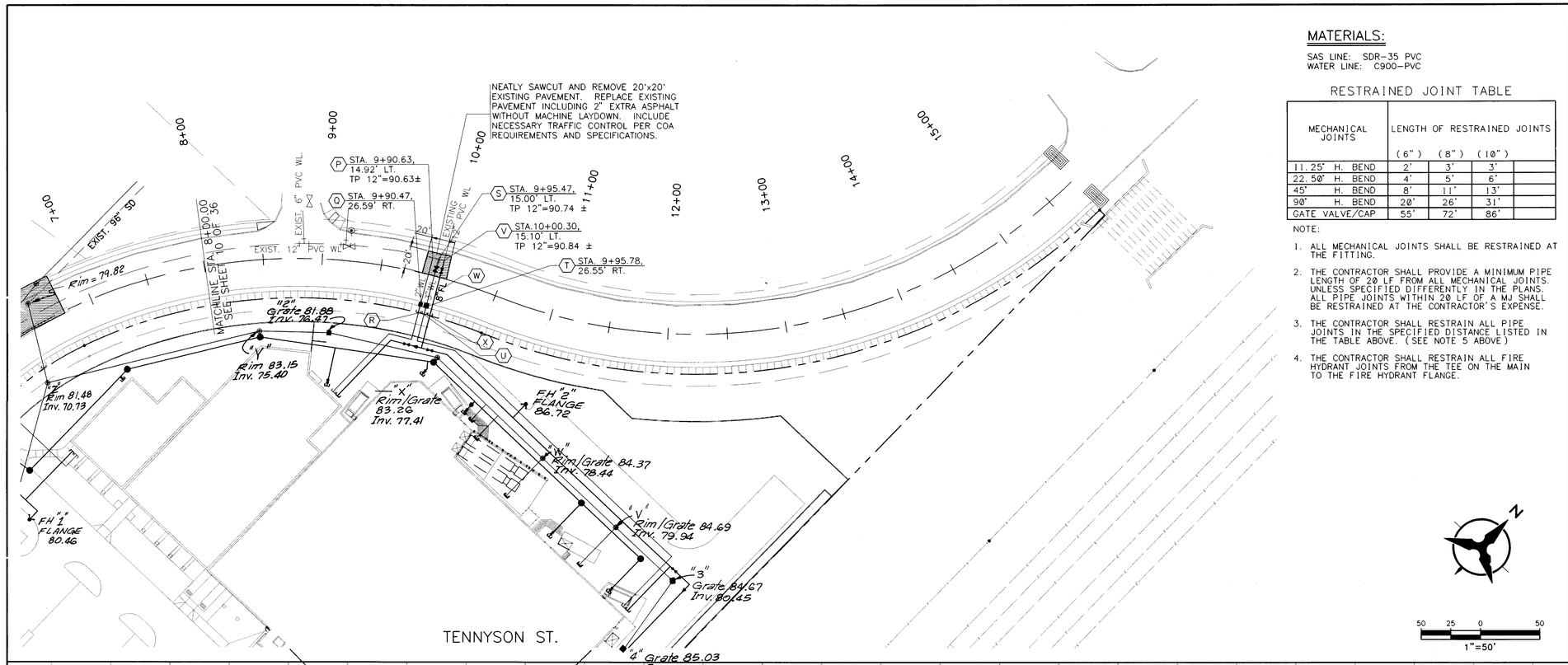

MATERIALS:

SAS LINE: SDR-35 PVC
WATER LINE: C900-PVC

RESTRAINED JOINT TABLE

MECHANICAL JOINTS	LENGTH OF RESTRAINED JOINTS (6")	(8")	(10")	
11.25° H. BEND	2'	3'	3'	
22.50° H. BEND	4'	5'	6'	
45° H. BEND	8'	11'	13'	
90° H. BEND	20'	26'	31'	
GATE VALVE/CAP	55'	72'	86'	

NOTE:

1. ALL MECHANICAL JOINTS SHALL BE RESTRAINED AT THE FITTING.
2. THE CONTRACTOR SHALL PROVIDE A MINIMUM PIPE LENGTH OF 20 LF FROM ALL MECHANICAL JOINTS. UNLESS SPECIFIED DIFFERENTLY IN THE PLANS. ALL PIPE JOINTS WITHIN 20 LF OF A MJ SHALL BE RESTRAINED AT THE CONTRACTOR'S EXPENSE.
3. THE CONTRACTOR SHALL RESTRAIN ALL PIPE JOINTS IN THE SPECIFIED DISTANCE LISTED IN THE TABLE ABOVE. (SEE NOTE 5 ABOVE)
4. THE CONTRACTOR SHALL RESTRAIN ALL FIRE HYDRANT JOINTS FROM THE TEE ON THE MAIN TO THE FIRE HYDRANT FLANGE.

NOTES:

1. THE CONTRACTOR SHALL FIELD VERIFY AIL EXISTING UTILITY LOCATIONS AND NOTIFY THE ENGINEER IMMEDIATELY OF ANY DISCREPANCIES.
2. ALL CURB RETURN RADII SHALL BE 25' TO FACE OF CURB UNLESS OTHERWISE SPECIFIED.
3. ALL CURVE DATA AND DIMENSIONS REFER TO FACE OF CURB UNLESS OTHERWISE SPECIFIED.
4. GRADE ELEVATIONS WHERE NOTED ARE FOR TOP OF STANDARD CURB UNLESS OTHERWISE SPECIFIED.
5. THE CONTRACTOR IS TO INSTALL A 4"x4"x5' POST AND EMD AT THE END OF EACH SANITARY SEWER SERVICE.
6. THE CONTRACTOR IS RESPONSIBLE FOR REPAIR AND/OR REPLACEMENT OF ALL UTILITY CONDUITS AND EXISTING LINES.
7. ANY ADDITIONAL GRADING REQUIRED TO MATCH PROPOSED STREET GRADES SHALL BE INCIDENTAL TO PAVING ITEMS.
8. THE CONTRACTOR SHALL PROVIDE THE INSPECTORS (CITY AND PRIVATE) WITH THE PROPOSED HYDROSTATIC TESTING PLAN. THE PLAN MUST BE APPROVED BEFORE TESTING OPERATIONS BEGIN.
9. THE CONTRACTOR SHALL PARK EQUIPMENT AND VEHICLES AS NOT TO INTERFERE WITH NORMAL ACTIVITIES OF RESIDENTS OR OTHER CONTRACTORS ON SITE.
10. ANY DAMAGE TO THE EXISTING FACILITIES (CURB, GUTTER, PAVEMENT, CONDUITS, LANDSCAPING, UTILITY LINES, ETC...) DURING CONSTRUCTION SHALL BE REPLACED AT THE CONTRACTORS EXPENSE.
11. REMOVAL OF ANY EXISTING CURB AND GUTTER SHALL BE AS PER COA STD. DWG. 2415 (SAWCUT ONLY).
12. WHEEL CHAIR RAMPS SHALL BE CONSTRUCTED PRIOR TO ACCEPTANCE OF CURB AND GUTTER.
13. THE FOLLOWING PERSONS SHALL BE NOTIFIED AT LEAST TWO BUSINESS DAYS PRIOR TO INSTALLING UTILITY CONDUIT CROSSINGS:

COMPANY	PHONE
PNM.	848-3374
US WEST	245-6694
JONES	761-6200
GAS CO	761-7770

14. FOR RESTRAINED JOINTS, SEE TABLE THIS SHEET.
15. FIRE HYDRANTS RESTRAINED FROM DISTRIBUTION LINE TO FLANGE (TYP).

(A) INSTALL 1-4' SANITARY SEWER SERVICE AS PER C.O.A. STD. DWG 2125
(B) INSTALL 1-4' SANITARY SEWER SERVICE PLUG AND EMD AS PER C.O.A. STD. DWG 2125
(C) INSTALL 1-4' DIA. TYPE "E" MANHOLE AS PER C.O.A. STD. DWG 2102
(D) INSTALL 1-1" WATER SERVICE w/TAPPING SADDLE AS PER C.O.A. STD. DWG 2362
(E) INSTALL 1-1" WATER METER BOX AS PER C.O.A. STD. DWG 2362 & 2366
(F) PLUG OR CAP 1" WATER SERVICE LINE
(G) PRESSURE CONNECTION : INSTALL 1 - 12"X4" TAPPING SLEEVE AND VALVE w/TYPE "B" MODIFIED BOX AND LID
(H) INSTALL 4" PVC C-900 FIRE LINE
(I) PLUG OR CAP 4" PVC FIRE LINE
(J) PRESSURE CONNECTION : INSTALL 1 - 12"X6" TAPPING SLEEVE AND VALVE w/TYPE "B" MODIFIED BOX AND LID
(K) INSTALL 6" PVC C-900 FIRE LINE
(L) PLUG OR CAP 6" PVC FIRE LINE w/BLOCKING
(M) STUB OUT AND PLUG 8" SDR-35 PVC SANITARY SEWER
(N) BUILD 1-4' TEE MH w/FIELD CONNECTION. SEE DETAIL SHEET 15A OF 36
(O) INSTALL 69LF 36" RCP IV STORM DRAIN @ S=15.0% INV.ELEV @ STUBOUT = 70.70
(P) INSTALL 1-2" WATER SERVICE w/TAPPING SADDLE AS PER C.O.A. STD. DWG 2363
(Q) INSTALL 1-2" WATER METER BOX AS PER C.O.A. STD. DWG 2367
(R) PLUG OR CAP 2" WATER SERVICE LINE
(S) INSTALL 1 - 12"X4" TAPPING SLEEVE AND VALVE w/TYPE "B" MODIFIED BOX AND LID. INSTALL 1 - 4"X3" REDUCER
(T) INSTALL 1 - TYPE "B" WATER METER PIT FOR 3" WATER SERVICE AS PER C.O.A. STD. DWG 2370
(U) PLUG OR CAP 3" WATER SERVICE LINE
(V) INSTALL 1 - 12"X8" TAPPING SLEEVE AND VALVE w/TYPE "B" BOX AND LID
(W) INSTALL 8" C-900 PVC FIRE LINE
(X) INSTALL 1 - 8" CAP w/BLOCKING

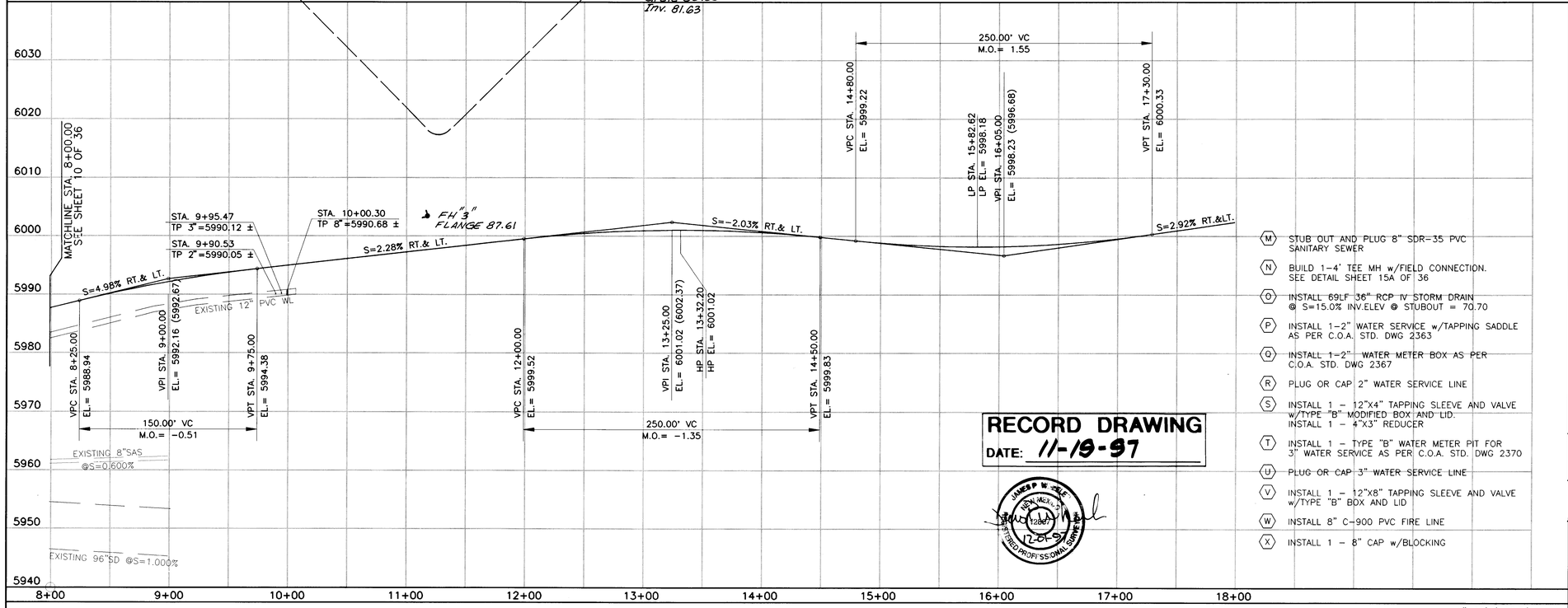

SCALE: 1"=50' (HORIZ.) 1"=10' (VERT.)

RECORD DRAWING
DATE: 11-19-97

JAMES P. WELLE NEW MEXICO 12267 REGISTERED PROFESSIONAL SURVEYOR 12-01-97

AS-BUILT INFORMATION
CONTRACTOR Jaynes Corp DATE 10/97
WORK STAKED BY BH DATE 10/97
FIELD INSPECTOR ACCEPTANCE BY BH DATE 10/97
FIELD SUPERVISOR BH DATE 10/97
DRAWINGS CORRECTED BY BH DATE 10/97
MICRO-FILM INFORMATION
RECORDED BY DATE
NO.

BENCH MARKS
NGS/ACS ALUMINUM TABLET STAMPED "TUMBLE"
GEOGRAPHIC POSITION (NAD 1927)
N.M. STATE PLANE COORDINATES (CENTRAL ZONE)
X=425,465.55, Y=1,513,470.01
GROUND-TO-GRID FACTOR=0.9996197
Δx=00° 08' 37"
ELEVATION=6009.155

SURVEY INFORMATION
FIELD NOTES

NO.	BY	DATE

ENGINEER'S SEAL
8-1-97

NO.	DATE	REMARKS	BY
		REVISIONS	
		DESIGN	

DESIGNED BY MSJ DATE 4/29/97
DRAWN BY BES DATE 4/29/97
CHECKED BY JRT DATE 4/29/97

BOHANNAN-HUSTON INC.
ENGINEERS • PLANNERS • PHOTOGRAMMETRISTS • SURVEYORS • LANDSCAPE ARCHITECTS
ALBUQUERQUE LAS CRUCES SANTA FE

CITY OF ALBUQUERQUE
PUBLIC WORKS DEPARTMENT
ENGINEERING DEVELOPMENT GROUP

TITLE: JEWEL OSCO: UTILITY PLANS
TENNYSON ST. STA. 8+00.00 - 15+75.00

DESIGN REVIEW COMMITTEE | CITY ENGINEER APPROVAL | LAST DESIGN UPDATE | MO./DAY/YR. | MO./DAY/YR.

CITY PROJECT NO. 562181 | ZONE MAP NO. E-22 | SHEET 11 OF 36

PROJECT NO.: C96238A2450
FILENAME: 96238\CDP\A2450\DWG\JO_WUTIL.DWG
XREFS: SITE.DWG, WORKING1.DWG
SHT3

SCANNED BY R. MASON

COPYRIGHT BOHANNAN-HUSTON, INC. 1/97

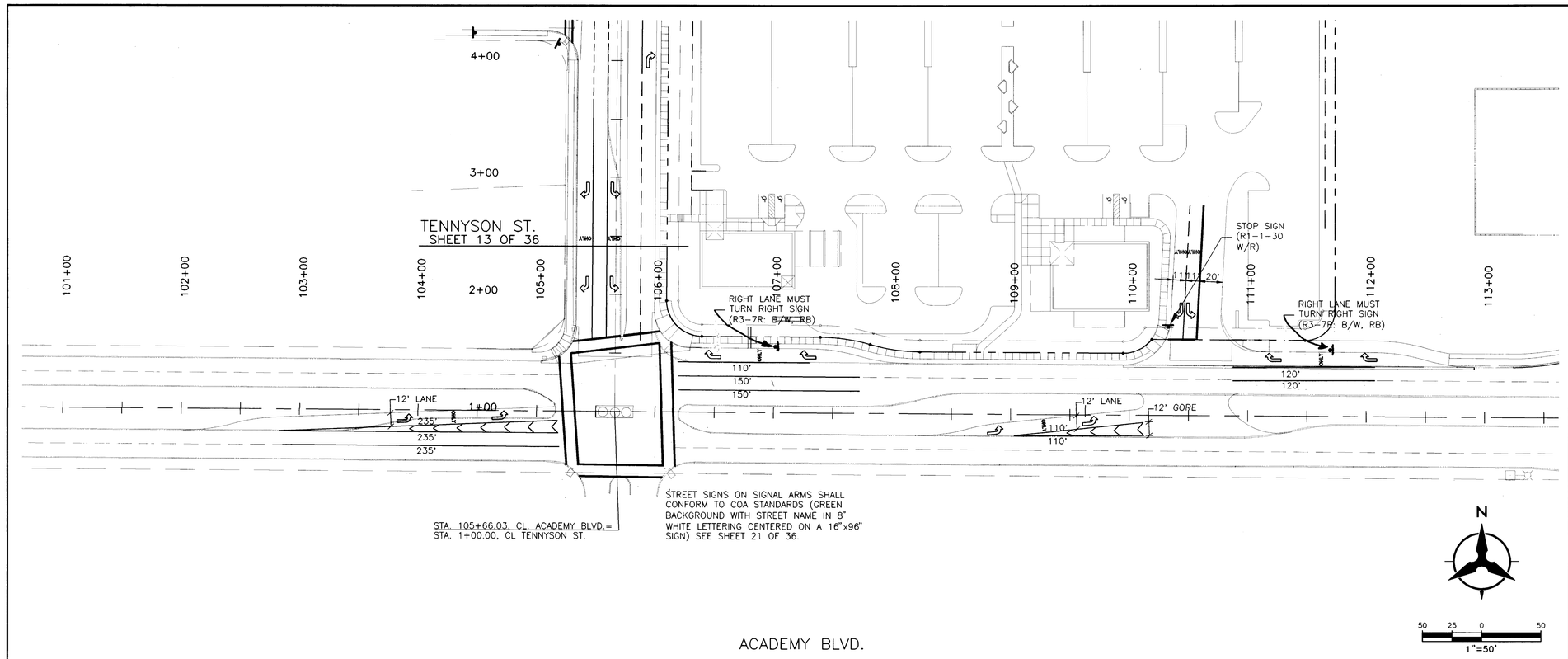

TYPICAL PAVEMENT MARKING SPACING

NO SCALE

TYPICAL GORE DIMENSIONS

NO SCALE

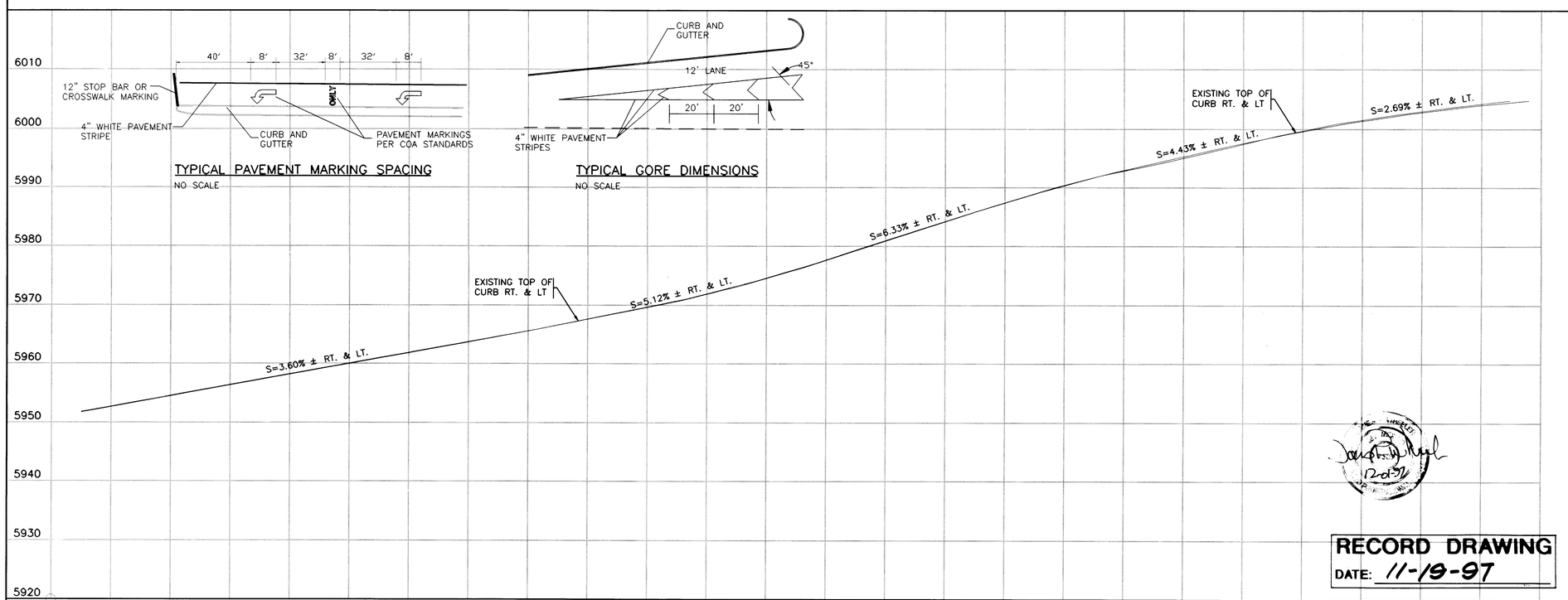

SCALE: 1"=50' (HORIZ.) 1"=10' (VERT.)

NOTES:

1. THE CONTRACTOR SHALL FIELD VERIFY ALL EXISTING UTILITY LOCATIONS AND NOTIFY THE ENGINEER IMMEDIATELY OF ANY DISCREPANCIES.

2. ALL CURB RETURN RADII SHALL BE 25' TO FACE OF CURB UNLESS OTHERWISE SPECIFIED.

3. ALL CURVE DATA AND DIMENSIONS REFER TO FACE OF CURB UNLESS OTHERWISE SPECIFIED.

4. GRADE ELEVATIONS WHERE NOTED ARE FOR TOP OF STANDARD CURB UNLESS OTHERWISE SPECIFIED.

5. THE CONTRACTOR IS TO INSTALL A 4"x4"x5' POST AND EMD AT THE END OF EACH SANITARY SEWER SERVICE.

6. THE CONTRACTOR IS RESPONSIBLE FOR REPAIR AND/OR REPLACEMENT OF ALL UTILITY CONDUITS AND EXISTING LINES.

7. ANY ADDITIONAL GRADING REQUIRED TO MATCH PROPOSED STREET GRADES SHALL BE INCIDENTAL TO PAVING ITEMS.

8. THE CONTRACTOR SHALL PROVIDE THE INSPECTORS (CITY AND PRIVATE) WITH THE PROPOSED HYDROSTATIC TESTING PLAN. THE PLAN MUST BE APPROVED BEFORE TESTING OPERATIONS BEGIN.

9. THE CONTRACTOR SHALL PARK EQUIPMENT AND VEHICLES AS NOT TO INTERFERE WITH NORMAL ACTIVITIES OF RESIDENTS OR OTHER CONTRACTORS ON SITE.

10. ANY DAMAGE TO THE EXISTING FACILITIES (CURB, GUTTER, PAVEMENT, CONDUITS, LANDSCAPING, UTILITY LINES, ETC...) DURING CONSTRUCTION SHALL BE REPLACED AT THE CONTRACTORS EXPENSE.

11. REMOVAL OF ANY EXISTING CURB AND GUTTER SHALL BE AS PER COA STD. DWG. 2415 (SAWCUT ONLY).

12. WHEEL CHAIR RAMPS SHALL BE CONSTRUCTED PRIOR TO ACCEPTANCE OF CURB AND GUTTER.

13. THE FOLLOWING PERSONS SHALL BE NOTIFIED AT LEAST TWO BUSINESS DAYS PRIOR TO INSTALLING UTILITY CONDUIT CROSSINGS:

COMPANY	PHONE
PNM.	848-3374
US WEST	245-6694
JONES	761-6200
GAS CO	761-7770

14. FOR RESTRAINED JOINTS, SEE TABLE – SHEET 10 OF 36.

15. FIRE HYDRANTS RESTRAINED FROM DISTRIBUTION LINE TO FLANGE (TYP).

LEGEND

- 4" WHITE STRIPE SOLID
- 4" WHITE STRIPE DASHED (10' DASH/ 30' OPEN)
- 4" WHITE STRIPE DASHED (3' DASH/ 9'OPEN)
- 4" DOUBLE YELLOW CENTERLINE STRIPE 1' SEPARATION
- EXISTING 4" WHITE STRIPE DASHED (10' DASH/ 30' OPEN)
- 12" WHITE STRIPE SOLID AT CROSSWALKS

NOTE: ALL NEW STRIPING TO BE REFLECTIVE PLASTIC CONFORMING TO COA REQUIREMENTS.

ALL MEDIAN NOSES TO BE PAINTED WITH HIGH REFLECTIVITY YELLOW PAINT CONFORMING TO COA REQUIREMENTS.

ALL SIGN FACES NEED TO BE S.E.G. (SUPER ENGINEERING GRADE) AND ALSO GRAFFITI RESISTANT

CONTRACTOR TO CONTACT COA TRAFFIC OPERATIONS BEFORE INSTALLATION OF STRIPING AND SIGNAGE FOR THEIR APPROVAL

RECORD DRAWING

DATE: 11-19-97

AS-BUILT INFORMATION		
CONTRACTOR: Jaynes Corp.	DATE: 10/97	
WORK STAKED BY: BH	DATE: 10/97	
INSPECTOR'S ACCEPTANCE BY: BH	DATE: 10/97	
FIELD VERIFICATION BY: BH	DATE: 10/97	
DRAWINGS CORRECTED BY: BH	DATE: 10/97	
MICRO-FILM INFORMATION		
RECORDED BY	DATE	
NO.		

BENCH MARKS
NGS/ACS ALUMINUM TABLET STAMPED "TUMBLE"
GEOGRAPHIC POSITION (NAD 1927)
N.M. STATE PLANE COORDINATES (CENTRAL ZONE)
X=425,465.55, Y=1,513,470.01
GROUND-TO-GRID FACTOR=0.9996197
∆α=00° 08' 37"
ELEVATION=6009.155

SURVEY INFORMATION		
FIELD NOTES		
NO.	BY	DATE

ENGINEER'S SEAL

5-1-97

NO.	DATE	REMARKS	BY
		REVISIONS	
		DESIGN	
		DESIGNED BY MSJ	DATE 4/29/97
		DRAWN BY BES	DATE 4/29/97
		CHECKED BY JRT	DATE 4/29/97

BOHANNAN-HUSTON INC.
ENGINEERS • PLANNERS • PHOTOGRAMMETRISTS • SURVEYORS • LANDSCAPE ARCHITECTS
ALBUQUERQUE LAS CRUCES SANTA FE

CITY OF ALBUQUERQUE
PUBLIC WORKS DEPARTMENT
ENGINEERING DEVELOPMENT GROUP

TITLE: JEWEL OSCO: STRIPING AND SIGNAGE PLAN
ACADEMY ROAD STA. 101+50.00 – 113+00.00

DESIGN REVIEW COMMITTEE	CITY ENGINEER APPROVAL	LAST DESIGN UPDATE	MO./DAY/YR.	MO./DAY/YR.

CITY PROJECT NO.	ZONE MAP NO.	SHEET	OF
562181	E-22	12	36

PROJECT NO.: 96238A2450
FILENAME: 96238\CDP\A2450\DWG\JO_STRIP.DWG
XREFS: SITE.DWG, WORKING1.DWG
SHT1

SCANNED BY BY LASON

COPYRIGHT BOHANNAN-HUSTON, INC. 1/97

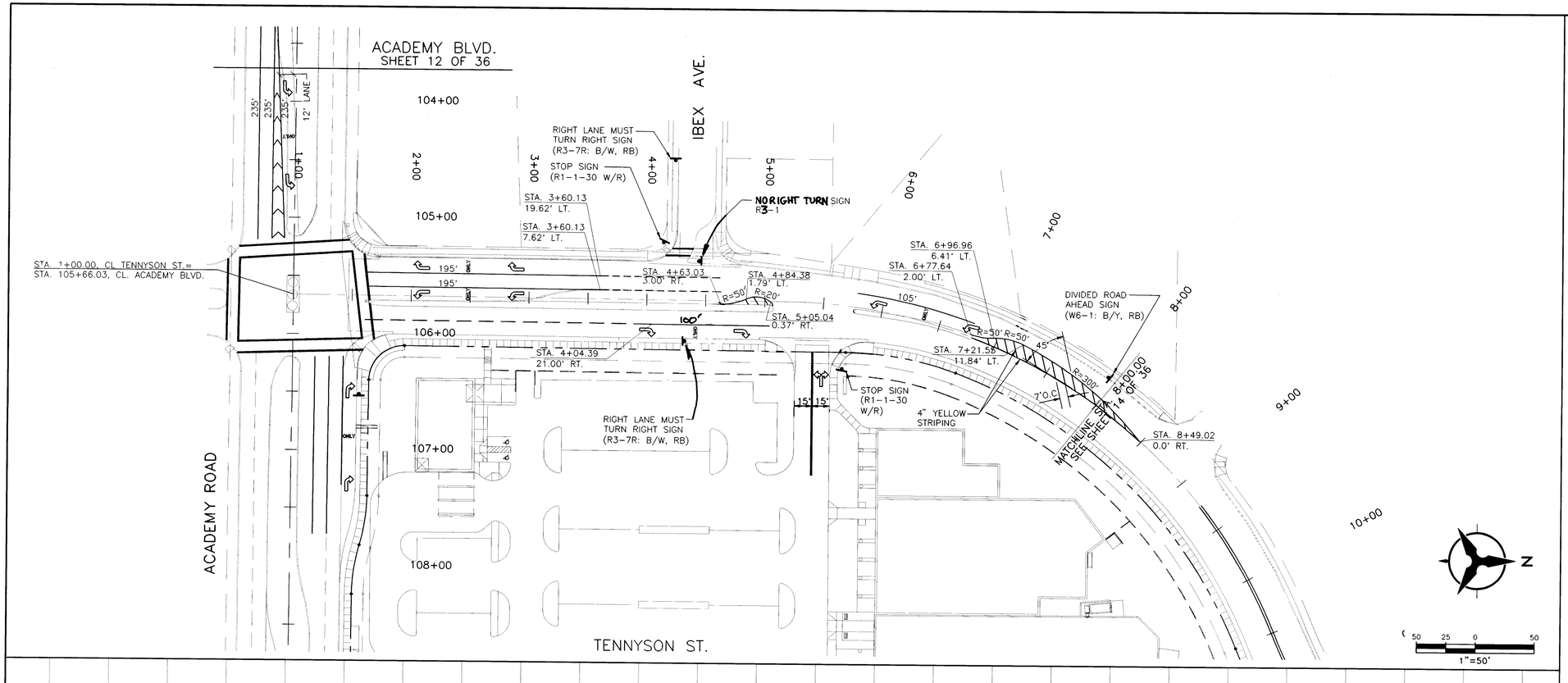

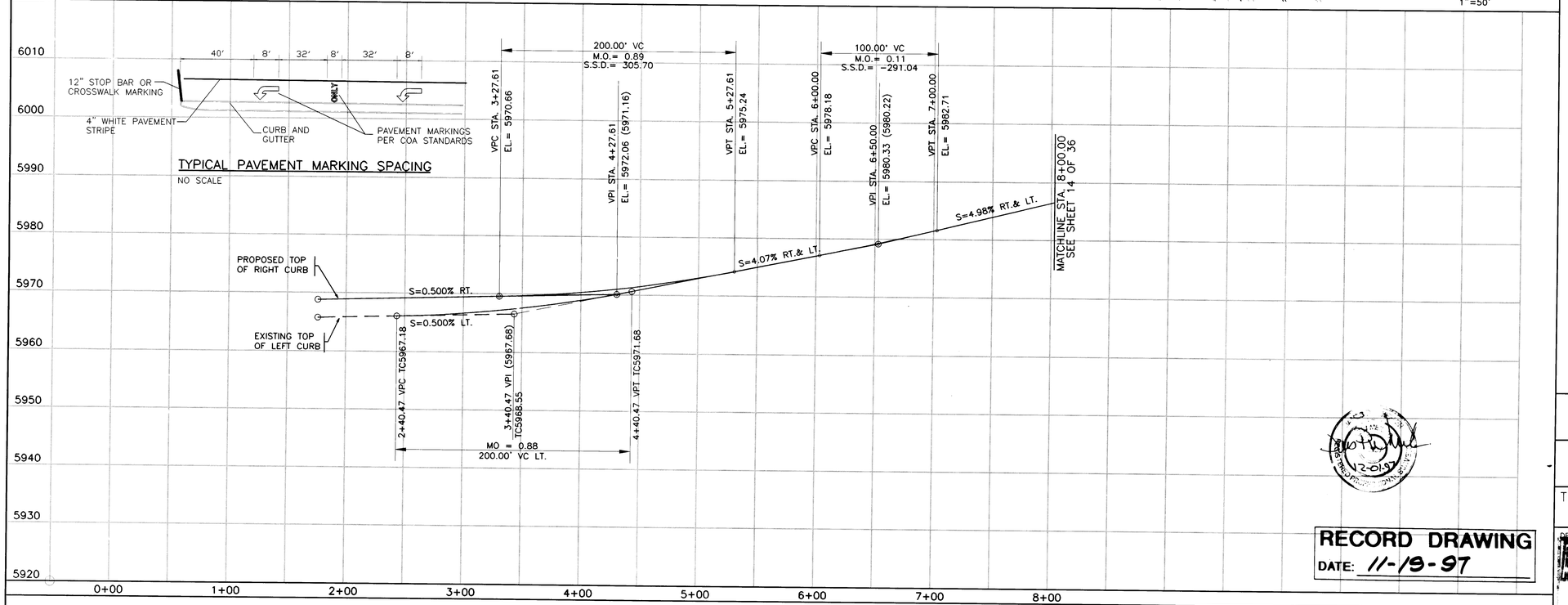

NOTES:

1. THE CONTRACTOR SHALL FIELD VERIFY ALL EXISTING UTILITY LOCATIONS AND NOTIFY THE ENGINEER IMMEDIATELY OF ANY DISCREPANCIES.

2. ALL CURB RETURN RADII SHALL BE 25' TO FACE OF CURB UNLESS OTHERWISE SPECIFIED.

3. ALL CURVE DATA AND DIMENSIONS REFER TO FACE OF CURB UNLESS OTHERWISE SPECIFIED.

4. GRADE ELEVATIONS WHERE NOTED ARE FOR TOP OF STANDARD CURB UNLESS OTHERWISE SPECIFIED.

5. THE CONTRACTOR IS TO INSTALL A 4"x4"x5' POST AND EMD AT THE END OF EACH SANITARY SEWER SERVICE.

6. THE CONTRACTOR IS RESPONSIBLE FOR REPAIR AND/OR REPLACEMENT OF ALL UTILITY CONDUITS AND EXISTING LINES.

7. ANY ADDITIONAL GRADING REQUIRED TO MATCH PROPOSED STREET GRADES SHALL BE INCIDENTAL TO PAVING ITEMS.

8. THE CONTRACTOR SHALL PROVIDE THE INSPECTORS (CITY AND PRIVATE) WITH THE PROPOSED HYDROSTATIC TESTING PLAN. THE PLAN MUST BE APPROVED BEFORE TESTING OPERATIONS BEGIN.

9. THE CONTRACTOR SHALL PARK EQUIPMENT AND VEHICLES AS NOT TO INTERFERE WITH NORMAL ACTIVITIES OF RESIDENTS OR OTHER CONTRACTORS ON SITE.

10. ANY DAMAGE TO THE EXISTING FACILITIES (CURB, GUTTER, PAVEMENT, CONDUITS, LANDSCAPING, UTILITY LINES, ETC.) DURING CONSTRUCTION SHALL BE REPLACED AT THE CONTRACTORS EXPENSE.

11. REMOVAL OF ANY EXISTING CURB AND GUTTER SHALL BE AS PER COA STD. DWG. 2415 (SAWCUT ONLY).

12. WHEEL CHAIR RAMPS SHALL BE CONSTRUCTED PRIOR TO ACCEPTANCE OF CURB AND GUTTER.

13. THE FOLLOWING PERSONS SHALL BE NOTIFIED AT LEAST TWO BUSINESS DAYS PRIOR TO INSTALLING UTILITY CONDUIT CROSSINGS:

COMPANY	PHONE
PNM.	848-3374
US WEST	245-6694
JONES	761-6200
GAS CO	761-7770

14. FOR RESTRAINED JOINTS, SEE TABLE - SHEET 10 OF 36.

15. FIRE HYDRANTS RESTRAINED FROM DISTRIBUTION LINE TO FLANGE (TYP).

LEGEND

- 4" WHITE STRIPE SOLID
- 4" WHITE STRIPE DASHED (10' DASH/ 30' OPEN)
- 4" WHITE STRIPE DASHED (3' DASH/ 9'OPEN)
- 4" DOUBLE YELLOW CENTERLINE STRIPE 1' SEPARATION
- EXISTING 4" WHITE STRIPE DASHED (10' DASH/ 30' OPEN)
- 12" WHITE STRIPE SOLID AT CROSSWALKS

NOTE: ALL NEW STRIPING TO BE REFLECTIVE PLASTIC CONFORMING TO COA REQUIREMENTS.

ALL MEDIAN NOSES TO BE PAINTED WITH HIGH REFLECTIVITY YELLOW PAINT CONFORMING TO COA REQUIREMENTS.

ALL SIGN FACES NEED TO BE SEG (SUPER ENGINEERING GRADE) AND ALSO GRAFFITI RESISTANT

CONTRACTOR TO CONTACT COA TRAFFIC OPERATIONS BEFORE INSTALLATION OF STRIPING AND SIGNAGE FOR THEIR APPROVAL

RECORD DRAWING
DATE: 11-19-97

SCALE: 1"=50' (HORIZ.) 1"=10' (VERT.)

AS-BUILT INFORMATION
CONTRACTOR Jaynes Corp DATE 10/97
WORK STAKED BY BH DATE 10/97
INSPECTOR'S ACCEPTANCE BY BH DATE 10/97
FIELD INSPECTION BY BH DATE 10/97
DRAWINGS CORRECTED BY BH DATE 10/97
MICRO-FILM INFORMATION
RECORDED BY DATE
NO.

BENCH MARKS
NGS/ACS ALUMINUM TABLET STAMPED "TUMBLE"
GEOGRAPHIC POSITION (NAD 1927)
N.M. STATE PLANE COORDINATES (CENTRAL ZONE)
X=425,465.55, Y=1,513,470.01
GROUND-TO-GRID FACTOR=0.9996197
Δα=-00° 08' 37"
ELEVATION=6009.155

SURVEY INFORMATION
FIELD NOTES
NO. BY DATE

ENGINEER'S SEAL
5-1-97

NO.	DATE	REMARKS	BY
		REVISIONS	

DESIGN
DESIGNED BY MSJ DATE 4/29/97
DRAWN BY BES DATE 4/29/97
CHECKED BY JRT DATE 4/29/97

BOHANNAN-HUSTON INC.
ENGINEERS • PLANNERS • PHOTOGRAMMETRISTS • SURVEYORS • LANDSCAPE ARCHITECTS
ALBUQUERQUE LAS CRUCES SANTA FE

CITY OF ALBUQUERQUE
PUBLIC WORKS DEPARTMENT
ENGINEERING DEVELOPMENT GROUP

TITLE: JEWEL OSCO: STRIPING AND SIGNAGE PLAN
TENNYSON ST. STA. 1+00.00 - 8+00.00

DESIGN REVIEW COMMITTEE: APPROVED
CITY ENGINEER APPROVAL
LAST DESIGN UPDATE
MO./DAY/YR. MO./DAY/YR.

CITY PROJECT NO. 562181
ZONE MAP NO. E-22
SHEET 13 OF 36

PROJECT NO.: C96238A2450
FILENAME: 96238\CDP\A2150\DWG\JO_STRIP.DWG
XREFS: SITE.DWG, WORKING1.DWG
SHT2

SCANNED BY BY DASON

COPYRIGHT BOHANNAN-HUSTON, INC. 1/97

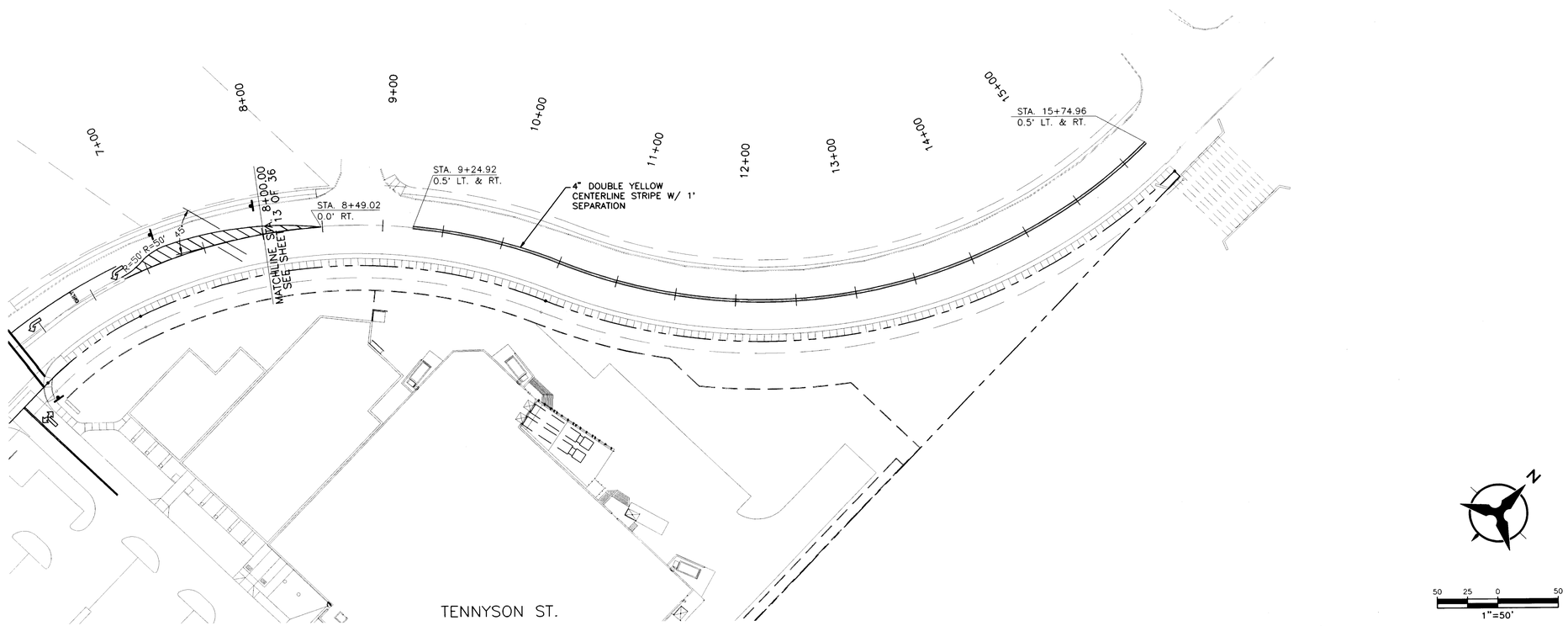

NOTES:

1. THE CONTRACTOR SHALL FIELD VERIFY ALL EXISTING UTILITY LOCATIONS AND NOTIFY THE ENGINEER IMMEDIATELY OF ANY DISCREPANCIES.

2. ALL CURB RETURN RADII SHALL BE 25' TO FACE OF CURB UNLESS OTHERWISE SPECIFIED.

3. ALL CURVE DATA AND DIMENSIONS REFER TO FACE OF CURB UNLESS OTHERWISE SPECIFIED.

4. GRADE ELEVATIONS WHERE NOTED ARE FOR TOP OF STANDARD CURB UNLESS OTHERWISE SPECIFIED.

5. THE CONTRACTOR IS TO INSTALL A 4"x4"x5' POST AND EMD AT THE END OF EACH SANITARY SEWER SERVICE.

6. THE CONTRACTOR IS RESPONSIBLE FOR REPAIR AND/OR REPLACEMENT OF ALL UTILITY CONDUITS AND EXISTING LINES.

7. ANY ADDITIONAL GRADING REQUIRED TO MATCH PROPOSED STREET GRADES SHALL BE INCIDENTAL TO PAVING ITEMS.

8. THE CONTRACTOR SHALL PROVIDE THE INSPECTORS (CITY AND PRIVATE) WITH THE PROPOSED HYDROSTATIC TESTING PLAN. THE PLAN MUST BE APPROVED BEFORE TESTING OPERATIONS BEGIN.

9. THE CONTRACTOR SHALL PARK EQUIPMENT AND VEHICLES AS NOT TO INTERFERE WITH NORMAL ACTIVITIES OF RESIDENTS OR OTHER CONTRACTORS ON SITE.

10. ANY DAMAGE TO THE EXISTING FACILITIES (CURB, GUTTER, PAVEMENT, CONDUITS, LANDSCAPING, UTILITY LINES, ETC...) DURING CONSTRUCTION SHALL BE REPLACED AT THE CONTRACTORS EXPENSE.

11. REMOVAL OF ANY EXISTING CURB AND GUTTER SHALL BE AS PER COA STD. DWG. 2415 (SAWCUT ONLY).

12. WHEEL CHAIR RAMPS SHALL BE CONSTRUCTED PRIOR TO ACCEPTANCE OF CURB AND GUTTER.

13. THE FOLLOWING PERSONS SHALL BE NOTIFIED AT LEAST TWO BUSINESS DAYS PRIOR TO INSTALLING UTILITY CONDUIT CROSSINGS:

COMPANY	PHONE
PNM.	848-3374
US WEST	245-6694
JONES	761-6200
GAS CO	761-7770

14. FOR RESTRAINED JOINTS, SEE TABLE – SHEET 10 OF 36.

15. FIRE HYDRANTS RESTRAINED FROM DISTRIBUTION LINE TO FLANGE (TYP).

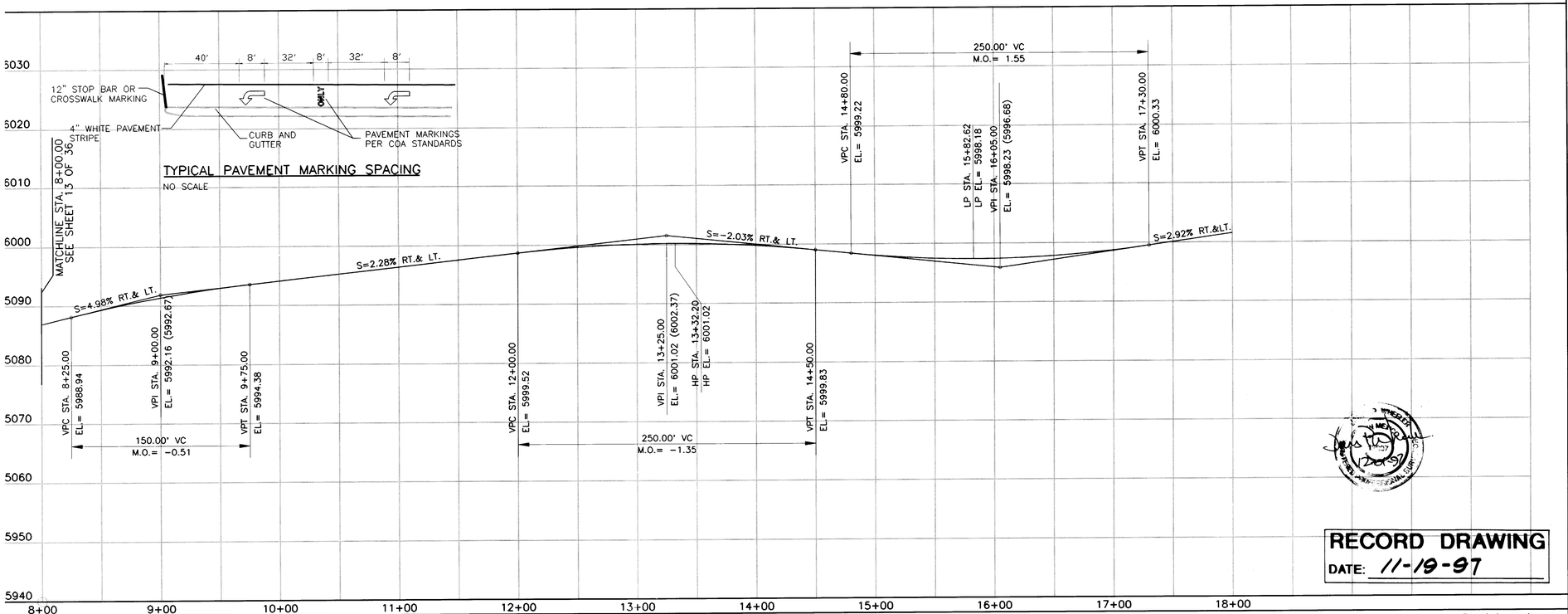

LEGEND

- 4" WHITE STRIPE SOLID
- 4" WHITE STRIPE DASHED (10' DASH/ 30' OPEN)
- 4" WHITE STRIPE DASHED (3' DASH/ 9'OPEN)
- 4" DOUBLE YELLOW CENTERLINE STRIPE 1' SEPARATION
- EXISTING 4" WHITE STRIPE DASHED (10' DASH/ 30' OPEN)
- 12" WHITE STRIPE SOLID AT CROSSWALKS

NOTE: ALL NEW STRIPING TO BE REFLECTIVE PLASTIC CONFORMING TO COA REQUIREMENTS.

ALL MEDIAN NOSES TO BE PAINTED WITH HIGH REFLECTIVITY YELLOW PAINT CONFORMING TO COA REQUIREMENTS.

ALL SIGN FACES NEED TO BE SEG (SUPER ENGINEERING GRADE) AND ALSO GRAFFITI RESISTANT

CONTRACTOR TO CONTACT COA TRAFFIC OPERATIONS BEFORE INSTALLATION OF STRIPING AND SIGNAGE FOR THEIR APPROVAL

RECORD DRAWING
DATE: 11-19-97

SCALE: 1"=50' (HORIZ.) 1"=10' (VERT.)

AS-BUILT INFORMATION
CONTRACTOR Taynes Corp DATE 10/97
WORK STAKED BY BH DATE 10/97
INSPECTOR'S ACCEPTANCE BY BH DATE 10/97
FIELD VERIFICATION BY BH DATE 10/97
DRAWINGS CORRECTED BY BH DATE 10/97
MICRO-FILM INFORMATION
RECORDED BY DATE
NO.

BENCH MARKS
NGS/ACS ALUMINUM TABLET STAMPED "TUMBLE"
GEOGRAPHIC POSITION (NAD 1927)
N.M. STATE PLANE COORDINATES (CENTRAL ZONE)
X=425,465.55, Y=1,513,470.01
GROUND-TO-GRID FACTOR=0.9996197
Δα=00° 08' 37"
ELEVATION=6009.155

SURVEY INFORMATION
FIELD NOTES

NO.	BY	DATE

ENGINEER'S SEAL
5-1-97

NO.	DATE	REMARKS REVISIONS DESIGN	BY
		DESIGNED BY MSJ	DATE 4/29/97
		DRAWN BY BES	DATE 4/29/97
		CHECKED BY JRT	DATE 4/29/97

BOHANNAN-HUSTON INC.
ENGINEERS • PLANNERS • PHOTOGRAMMETRISTS • SURVEYORS • LANDSCAPE ARCHITECTS
ALBUQUERQUE LAS CRUCES SANTA FE

CITY OF ALBUQUERQUE
PUBLIC WORKS DEPARTMENT
ENGINEERING DEVELOPMENT GROUP

TITLE: JEWEL OSCO: STRIPING AND SIGNAGE PLAN
TENNYSON ST. STA. 8+00.00 – 15+75.00

DESIGN REVIEW COMMITTEE | CITY ENGINEER APPROVAL | LAST DESIGN UPDATE | MO./DAY/YR. | MO./DAY/YR.

CITY PROJECT NO.	ZONE MAP NO.	SHEET	OF
562181	E-22	14	36

PROJECT NO.: C96238A2450
FILENAME: 96238\CDP\A2450\DWG\JO_STRIP.DWG
XREFS: SITE.DWG, WORKHIGH.DWG
HT3

SCANNED BY LASER

COPYRIGHT BOHANNAN-HUSTON, INC. 1/97

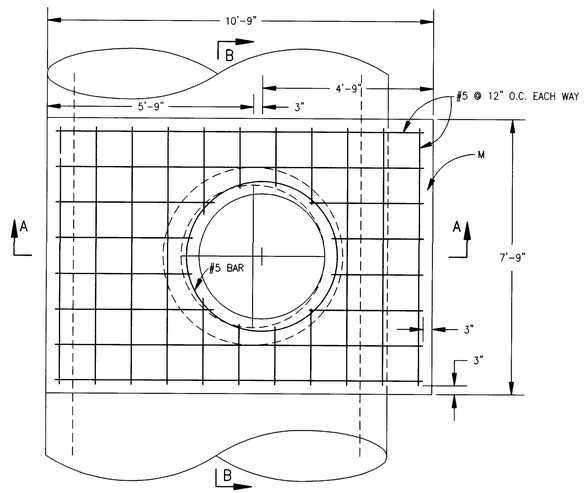

PLAN AT C-C

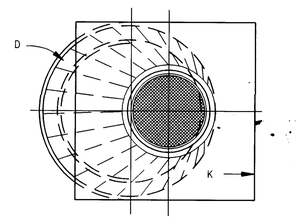

PLAN AT D-D

GENERAL NOTES:

1. TYPE E M.H. NOT TO BE USED FOR DEPTHS LESS THAN 6' MEASURED FROM INV. TO RIM.
2. M.H. GREATER THAN 18' IN DEPTH SHALL BE OF PRECAST CONC. SECTIONS ONLY.
3. DESIGN APPLIES TO 4' I.D. MH ON EXISTING 96" RCP SD
4. USE NON-SHRINK GROUT FOR JOINTS, FILLETS & PIPE PENETRATIONS.
5. COMPACT ALL BACKFILL AROUND M.H. TO 95%.
6. POSITION M.H. OPENING ECCENTRICALLY OVER THE LEFT OR RIGHT SIDE OF THE MAIN LINE.
7. ALL MANHOLES 20' DEEP OR DEEPER WILL REQUIRE AN INTERMEDIATE LANDING IN THE MANHOLE BARREL. TYPE "C" MANHOLE COVERS SHALL BE USED AS THE INTERMEDIATE LANDINGS. (TYPE "C" MANHOLE COVER – STD DWG 2107) INTERMEDIATE LANDINGS SHALL BE LOCATED AT THE MID POINT + OR – 2 FEET OF THE HEIGHT OF THE MANHOLE.

CONSTRUCTION NOTES:

A. CONCRETE PIPE SUPPORTS SHALL EXTEND OUTSIDE OF M.H. TO BELL OF FIRST JOINT AND SHALL CRADLE PIPE TO SPRING LINE.

B. ANY PIPE PENETRATION INTO THE MANHOLE SHALL USE A PRECAST TEE SECTION IN THE BARREL.

C. -----

D. PRECAST REINFORCED CONCRETE ECCENTRIC CONE. CONTRACTOR TO PROVIDE SHOP DWGS FOR APPROVAL.

E. USE MAX. 4 COURSES GR. MS BRICK ON UNPAVED STREET FOR FUTURE ADJ. OF FRAME TO PAVEMENT GRADE. PLASTER INSIDE WITH 1/2" MORTAR.

F. BACKFILL AND COMPACT TO 95% EACH BARREL SECTION AFTER PLACEMENT AND PRIOR TO PLACING NEXT SECTION.

G. -----

H. INV. ELEV. OF STUB OR LATERAL AS SHOWN ON PLANS.

I. -----

J. 6" GROUT FILLET ON UPPER HALF OF PIPE AND AROUND BASE.

K. USE A 5' X 5' CONCRETE PAD IN ALL AREAS.

L. M.H. FRAME AND COVER, SEE COA STD DWG. 2110.

M. CONCRETE CAP, 4000 PSI. (REINFORCED AS SHOWN)

N. -----

P. -----

Q. -----

R. STEPS TO BE INSTALLED AS PER SPEC. SECTION 920.4.7.

S. EMD (IN UNPAVED AREAS).

T. IN UNPAVED AREAS SET FRAME TO GRADE AND SLOPE TOP OF PAD.

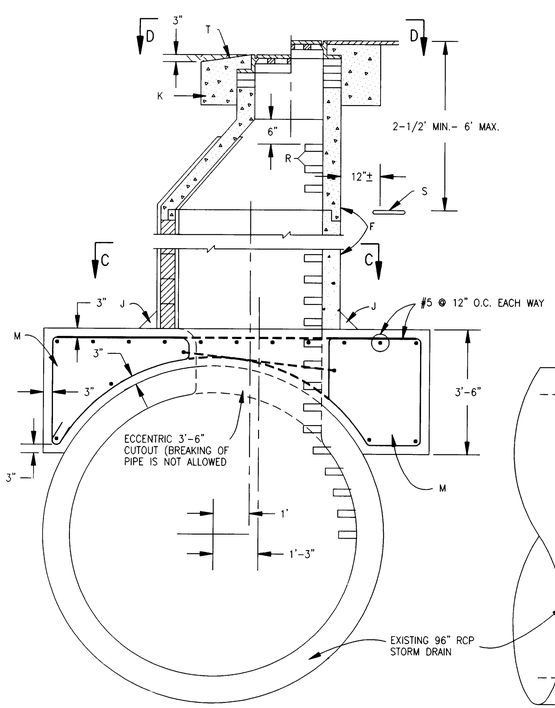

CROSS SECTION A-A

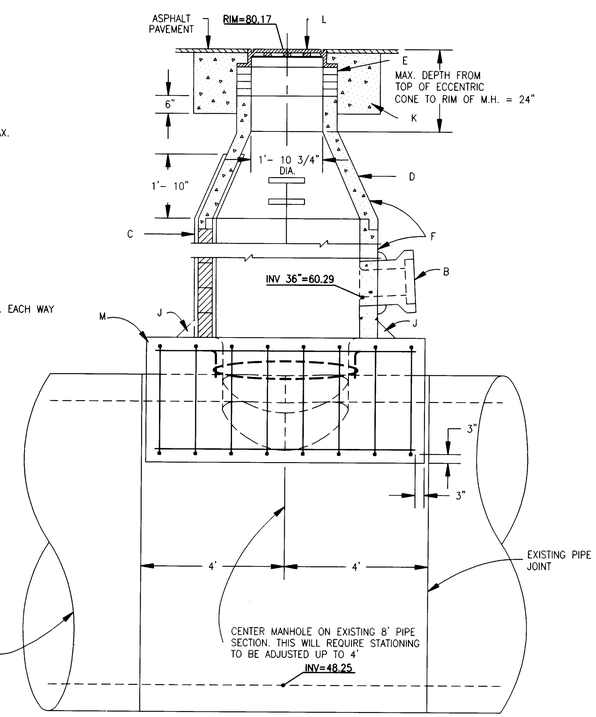

CROSS SECTION B-B

CITY OF ALBUQUERQUE

TEE TYPE STORM SEWER MANHOLE (TYPE "E") ON EXISTING 96" RCP SD

DWG. 2102 (MODIFIED) FEB. 1997

RECORD DRAWING
DATE: 11-19-97

SURVEY INFORMATION			BENCH MARKS	AS-BUILT INFORMATION
FIELD NOTES			NGS/ACS ALUMINUM TABLET STAMPED "TUMBLE"	CONTRACTOR Haynes Corp. DATE 10/97
NO.	BY	DATE	GEOGRAPHIC POSITION (NAD 1927)	STAKED BY BH DATE 10/97
			N.M. STATE PLANE COORDINATES (CENTRAL ZONE)	INSPECTOR'S ACCEPTANCE BY BH DATE 10/97
			X=425,465.55, Y=1,513,470.01	FIELD VERIFICATION BY BH DATE 10/97
			GROUND-TO-GRID FACTOR=0.9996197	DRAWINGS CORRECTED BY BH DATE 10/97
			Δα=00° 08' 37"	MICRO-FILM INFORMATION
			ELEVATION=6009.155	RECORDED BY DATE
				NO.

ENGINEER'S SEAL

5-1-97

NO.	DATE	REMARKS	BY
		REVISIONS	
		DESIGN	

DESIGNED BY: MSJ DATE: 4/29/97
DRAWN BY: BES DATE: 4/29/97
CHECKED BY: JRT DATE: 4/29/97

BOHANNAN-HUSTON INC.
ENGINEERS • PLANNERS • PHOTOGRAMMETRISTS • SURVEYORS • LANDSCAPE ARCHITECTS
ALBUQUERQUE LAS CRUCES SANTA FE

CITY OF ALBUQUERQUE
PUBLIC WORKS DEPARTMENT
ENGINEERING DEVELOPMENT GROUP

TITLE: JEWEL OSCO: OFFSITE IMPROVEMENTS
TEE TYPE STORM SEWER MANHOLE DETAILS

DESIGN REVIEW COMMITTEE	CITY ENGINEER APPROVAL	LAST DESIGN UPDATE	MO./DAY/YR.	MO./DAY/YR.

CITY PROJECT NO.	ZONE MAP NO.	SHEET	OF
562181	E-22	15A	36

SCANNED BY BY LASON

BHI PROJ. NO. C96238A2450
FILENAME: BHI-MAIN\96238\CDP\A-2450 PUBLIC INFRASTRUCTURE\DWG\DETAILS.dwg

CONSTRUCTION TRAFFIC CONTROL GENERAL NOTES

1. CONTRACTOR MUST OBTAIN FROM CONSTRUCTION COORDINATION AN EXCAVATION/BARRICADING PERMIT BEFORE ENGAGING IN ANY CONSTRUCTION. MAINTENANCE OR REPAIR WORK IN ANY OF THE CITY OF ALBUQUERQUE'S RIGHTS-OF-WAY. EMERGENCY WORK THAT WOULD PRESERVE LIFE OR PROPERTY IS EXCLUDED WITH THE UNDERSTANDING, THAT A PERMIT SHALL BE OBTAINED WITHIN 24 TO 48 HOURS.

2. CONTRACTOR SHALL AT THE TIME OF PERMIT REQUEST, SUBMIT FOR APPROVAL BY CONSTRUCTION COORDINATION, A TRAFFIC CONTROL PLAN DETAILING ALL EXISTING TOPOGRAPHY SUCH AS LANE WIDTHS, DRIVEWAYS, AND BUSINESS/RESIDENTIAL ACCESSES. THE TRAFFIC CONTROL PLAN SHALL INCLUDE ALL PHASES OF WORK AND SCHEDULES INVOLVED IN THE CONSTRUCTION PROJECT. ANY SEPARATE PHASES OF A CONSTRUCTION PROJECT SHALL BE GIVEN AN INDIVIDUAL PERMIT EACH. BLANKET PERMITS WILL NOT BE ISSUED.

3. THESE TYPICAL TRAFFIC CONTROL PLANS DO NOT REFLECT THE EXISTING TOPOGRAPHY SUCH AS DRIVEWAYS, LANE WIDTHS, AND BUSINESS/RESIDENTIAL ACCESSES. EVERY LOCATION THAT REQUIRES CONSTRUCTION TRAFFIC CONTROL SHALL HAVE A DETAILED TRAFFIC CONTROL PLAN SHOWING ALL EXISTING TOPOGRAPHY.

4. CONSTRUCTION SHALL NOT BEGIN UNLESS A TRAFFIC CONTROL PLAN HAS BEEN APPROVED AND VERIFIED BY CONSTRUCTION COORDINATION

5. CONSTRUCTION COORDINATION SHALL BE NOTIFIED 48 HOURS PRIOR TO ANY TRAFFIC CONTROL CHANGES NEEDED BY CONTRACTOR, THAT WERE NOT PREVIOUSLY APPROVED. THESE TRAFFIC CONTROL CHANGES SHALL BE REQUESTED IN WRITING ACCOMPANIED WITH A TRAFFIC CONTROL PLAN REFLECTING SUCH CHANGES.

6. ALL CONSTRUCTION TRAFFIC CONTROL DEVICES SHALL COMPLY TO THE MANUAL ON UNIFORM TRAFFIC CONTROL DEVICES (MUTCD), LATEST EDITION IT IS THE RESPONSIBILITY OF THE CONTRACTOR TO INSTALL, SERVICE AND MAINTAIN ALL TRAFFIC CONTROL DEVICES. TRAFFIC CONTROL DEVICES SHALL NOT BE REMOVED OR ALTERED IN ANY WAY WITHOUT THE APPROVAL OF CONSTRUCTION COORDINATION, PER SECTION 6A-4 OF THE MUTCD, LATEST EDITION.

7. THE CONSTRUCTION TRAFFIC CONTROL INITIAL SET-UP SHALL BE BY AN AMERICAN TRAFFIC SAFETY SERVICES ASSOCIATION (ATSSA) CERTIFIED WORKSITE TRAFFIC SUPERVISOR. THE MAINTENANCE AND SERVICING SHALL ALSO BE DONE BY AN ATSSA CERTIFIED WORKSITE TRAFFIC SUPERVISOR OR EQUIVALENT.

8. CONTRACTOR IS RESPONSIBLE TO MAINTAIN AND SERVICE ALL TRAFFIC CONTROL DEVICES 24 HOURS A DAY, 7 DAYS A WEEK THROUGHOUT LENGTH OF PROJECT. CONTRACTOR IS RESPONSIBLE THAT ALL TRAFFIC CONTROL DEVICES COMPLY WITH THE MUTCD, LATEST EDITION.

9. ALL ADVANCE WARNING SIGNS SHALL BE DOUBLE INDICATED WHENEVER THERE ARE MULTI-LANE TRAFFIC IN ANY ONE GIVEN DIRECTION AND THERE IS SUFFICIENT MEDIAN SPACE.

10. ALL BARRICADES IN ALL TAPERS AND TANGENTS SHALL BE PLACED APART, A DISTANCE MEASURED IN FEET, EQUAL TO THAT OF THE POSTED SPEED LIMIT. NO EXCEPTIONS UNLESS APPROVED BY CONSTRUCTION COORDINATION PER MUTCD SECTION 6A-4.

11. CONTRACTOR SHALL NOT BEGIN WORK BEFORE 7:00 A.M. OR END WORK AFTER 7:00 P.M. WITHOUT THE APPROVAL OF CONSTRUCTION COORDINATION.

12. CONTRACTOR IS RESPONSIBLE TO PROVIDE CONSTRUCTION COORDINATION, A WEEKLY LOG OF DAILY INSPECTIONS OF BARRICADE AND MAINTENANCE SCHEDULES ON PROJECTS THAT ARE OVER ONE WEEK DURATION.

13. EQUIPMENT OR MATERIALS SHALL NOT BE STORED WITHIN 15 FEET OF A TRAVELLED TRAFFIC LANE DURING NON-WORKING HOURS WITHOUT THE APPROVAL OF CONSTRUCTION COORDINATION.

14. CONTRACTOR SHALL PROVIDE AND MAINTAIN A SAFE AND ADEQUATE MEANS OF CHANNELIZING PEDESTRIAN TRAFFIC AROUND AND THROUGH THE CONSTRUCTION AREA.

15. CONTRACTOR IS RESPONSIBLE FOR OBLITERATION OF ANY CONFLICTING STRIPING AND RESPONSIBLE FOR ALL TEMPORARY STRIPING.

16. CONTRACTOR SHALL MAINTAIN ACCESS TO ALL FACILITIES, BUSINESSES AND/OR RESIDENTS AT ALL TIMES.

17. CONTRACTOR SHALL PROVIDE ACCESS SIGNS FOR BUSINESSES LOCATED WITHIN THE CONSTRUCTION AREA UNDER THE SUPERVISION OF CONSTRUCTION COORDINATION. EACH ACCESS SIGN SHALL HAVE 5 INCH, WHITE OPAQUE LETTERING ON BLUE REFLECTORIZED BACKGROUND. ACCESS SIGNS SHALL BE CONSIDERED INCIDENTAL TO THE BID AND NOT PART OF THE CONTRACT UNLESS OTHERWISE STATED. NO MORE THAN 3 BUSINESSES SHALL BE LISTED ON A ACCESS SIGN SHOPPING CENTERS AND MALLS SHALL BE LISTED AS SUCH.

18. ALL ADVANCE WARNING SIGNS SHALL MEET THE MINIMUM REFLECTIVE INTENSITY REQUIREMENTS SET FORTH BY THE CITY OF ALBUQUERQUE. CONSTRUCTION COORDINATION SHALL DETERMINE ALL REQUIREMENTS AND APPROVE OR DISAPPROVE ANY ADVANCE WARNING SIGN PER SECTION 6A-4 OF THE MUTCD, LATEST EDITION.

19. 24 HOURS PRIOR TO OCCUPYING OR CLOSING OF A RIGHT-OF-WAY, CONTRACTOR SHALL NOTIFY: POLICE, FIRE DEPARTMENT, SCHOOLS, HOSPITALS, TRANSIT AUTHORITY, BUSINESSES AND/OR RESIDENTS THAT WILL BE AFFECTED BY THE CONSTRUCTION.

20. ANY FIELD ADJUSTMENTS SHALL BE APPROVED BY CONSTRUCTION COORDINATION.

21. EXCAVATIONS SHALL BE PLATED, TEMPORARILY PATCHED OR RESURFACED PRIOR TO OPENING OF TRAFFIC. A MINIMUM OF 11 FEET SHALL BE PROVIDED FOR TRAFFIC IN ANY GIVEN DIRECTION. CONTRACTOR IS RESPONSIBLE FOR ANY WORK INVOLVED IN SATISFYING THESE REQUIREMENTS.

22. CONTRACTOR SHALL AT ALL TIMES COMPLY WITH THE FOLLOWING:
   1. STANDARDS AND REQUIREMENTS SET FORTH IN THE MANUAL ON UNIFORM TRAFFIC CONTROL DEVICES, LATEST EDITION.
   2. THE CITY OF ALBUQUERQUE TRAFFIC CODE, LATEST EDITION.
   3. SECTION 19 OF THE CITY OF ALBUQUERQUE'S STANDARD SPECIFICATIONS FOR PUBLIC WORK CONSTRUCTION, AS WELL AS OTHER SECTIONS.

23. FAILURE TO COMPLY WITH ANY OF THE ABOVE MENTIONED, WILL BE ADEQUATE CAUSE TO CEASE ALL WORK ON ANY CONSTRUCTION PROJECT. WORK WILL NOT RESUME UNTIL ALL REQUIREMENTS ARE ADDRESSED AND APPROVED BY CONSTRUCTION COORDINATION.

24. ALL TRAFFIC CONTROL DEVICES SHALL BE KEPT IN NEW-CLEAN CONDITION. WASHING OF EQUIPMENT IS INCIDENTAL TO IT'S PLACEMENT AND MAINTENANCE.

25. TRAFFIC CONTROL STANDARDS APPLY ONLY WHERE THE CONSTRUCTION TRAFFIC CONTROL PLANS ARE NOT SPECIFIC

26. ADVANCE WARNING SIGNS SHALL BE 36"x36" WITH SUPER ENGINEERING GRADE SHEETING OR BETTER.

27. CONTRACTOR SHALL SUBMIT THE CONSTRUCTION SCHEDULE TO THE CONSTRUCTION COORDINATOR FOR APPROVAL AND SHALL BE BASED ON A 24 HOUR CONSTRUCTION DAY.

LASON 1-505-344-9404
BEST COPY AVAILABLE

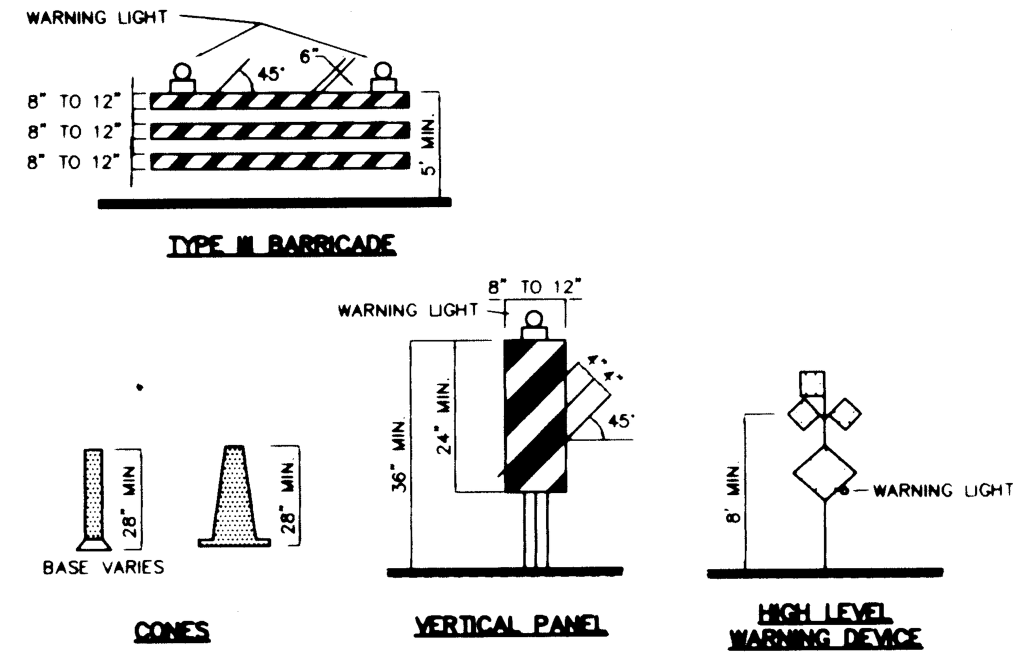

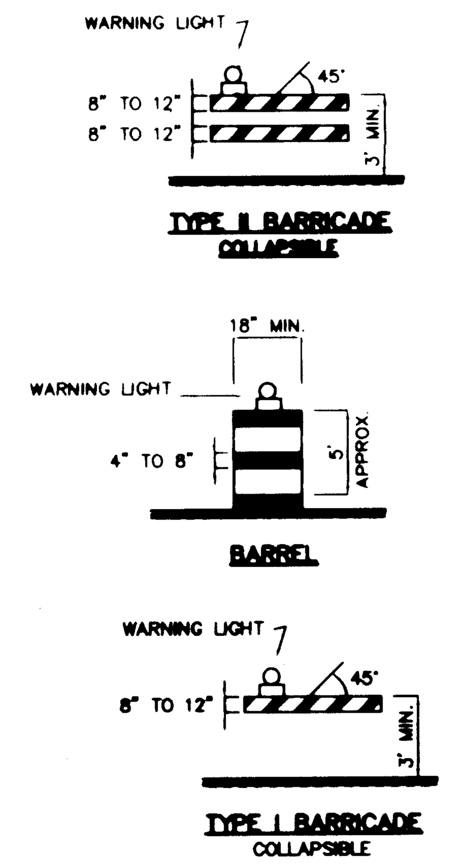

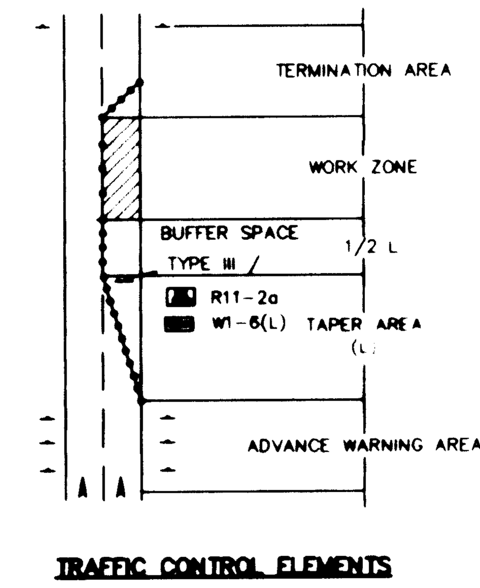

LEGEND

- WORK AREA
- BARRICADE - TYPE I, TYPE II, OR BARREL
- BARRICADE - TYPE III
- X VERTICAL PANEL
- WARNING SIGN
- D DISTANCE BETWEEN SIGNS - A DISTANCE MEASURED IN FEET EQUAL TO A VALUE OF TEN TIMES THE SPEED LIMIT OF THE STREET
- FLAGMAN POSITION
- S SPACING BETWEEN BARRICADES- A DISTANCE MEASURED IN FEET EQUAL TO THE SPEED LIMIT OF THE STREET
- L TAPER LENGTH - SEE CHART BELOW

THE TANGENT LENGTH IS EQUAL TO THE TAPER LENGTH FOR A GIVEN STREET

TAPER REQUIREMENTS

SPEED LIMIT (MPH)	TAPER LENGTH (L) (FEET)			MINIMUM NUMBER OF DEVICES FOR TAPER	MAXIMUM DEVICE SPACING IN FEET	
	10' LANE	11' LANE	12' LANE		ALONG TAPER	AFTER TAPER
20	70	75	80	5	20	20
25	105	115	125	6	25	25
30	150	165	180	7	30	30
35	205	225	245	8	35	35
40	270	295	320	9	40	40
45	450	495	540	13	45	45
50	500	550	600	13	50	50
55	550	605	660	13	55	55

RECOMMENDED SIGN SPACING(D) FOR ADVANCE WARNING SIGN SERIES

SPEED MILES PER HOUR	MINIMUM DISTANCE IN FEET BETWEEN SIGNS	MINIMUM DISTANCE IN FEET FROM LAST SIGN TO TAPER
0-20	10 X SPEED LIMIT	10 X SPEED LIMIT
25-30	10 X SPEED LIMIT	10 X SPEED LIMIT
30-35	10 X SPEED LIMIT	10 X SPEED LIMIT
40-45	10 X SPEED LIMIT	10 X SPEED LIMIT
50-60	10 X SPEED LIMIT	10 X SPEED LIMIT

TAPER CRITERIA

TYPE OF TAPER	TAPER LENGTH
UPSTREAM TAPER:	
MERGING TAPER	L MINIMUM
SHIFTING TAPER	1/2 L MINIMUM
SHOULDER TAPER	1/2 L MINIMUM
TWO-WAY TRAFFIC TAPER	100 FEET MAXIMUM
DOWNSTREAM TAPERS	100 FEET PER LANE

TAPER LENGTH COMPUTATION

SPEED LIMIT	
40 MPH OR LESS	$L = \frac{WS^2}{60}$
45 MPH OR GREATER	$L = W \times S$

L = TAPER LENGTH
W = WIDTH OF OFFSET IN FEET
S = POSTED SPEED OR OFF-PEAK 85-PERCENTILE SPEED IN MPH

SIGN FACE DETAILS

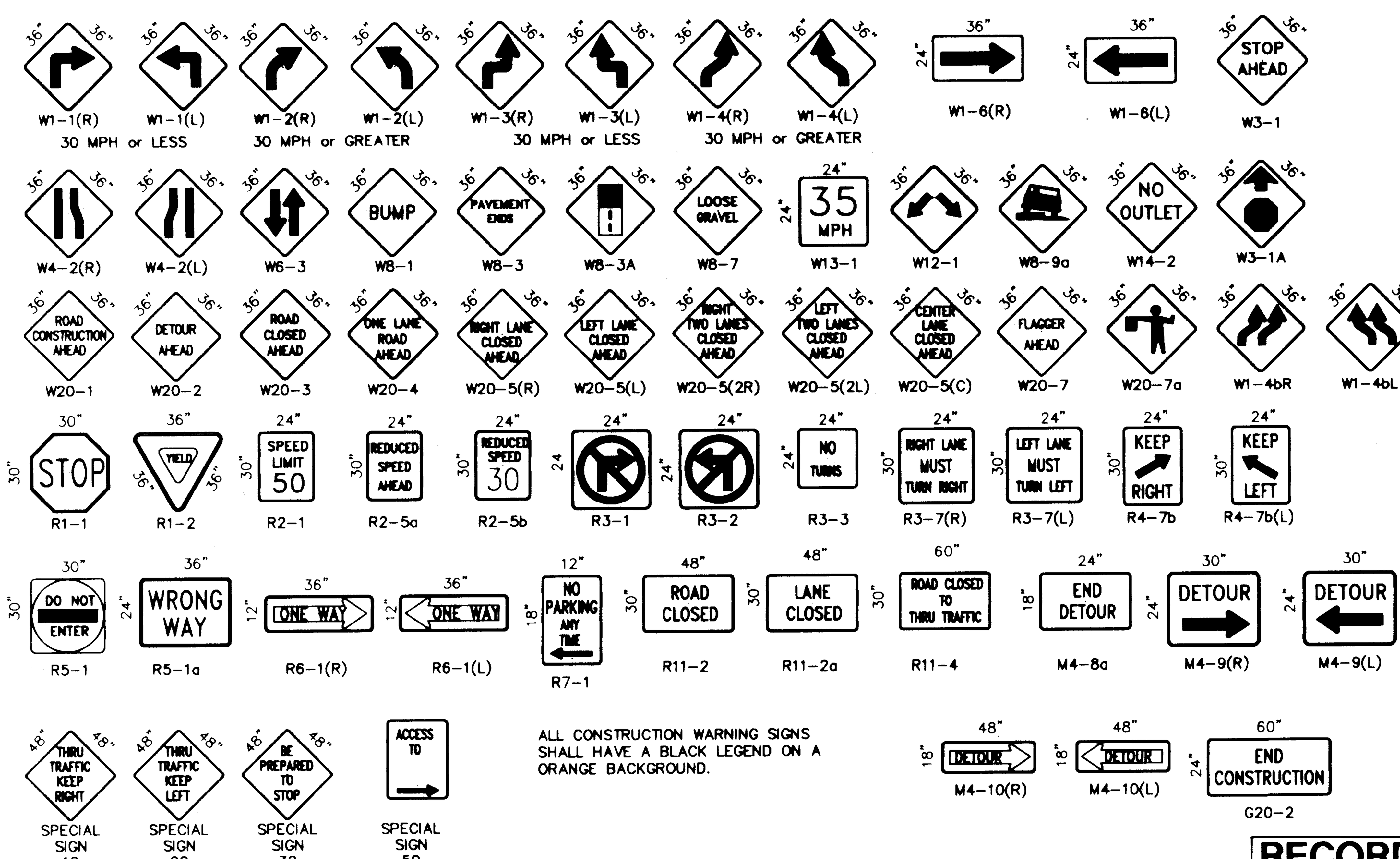

ALL CONSTRUCTION WARNING SIGNS SHALL HAVE A BLACK LEGEND ON A ORANGE BACKGROUND.

RECORD DRAWING
DATE: 11-19-97

AS BUILT INFORMATION
CONTRACTOR Jaynes Corp. DATE 10/97
WORK STAKED BY BH DATE 10/97
INSPECTOR'S ACCEPTANCE BY BH DATE 10/97
FIELD VERIFICATION BY BH DATE 10/97
DRAWINGS CORRECTED BY BH DATE 10/97
MICRO-FILM INFORMATION
RECORDED BY | DATE | NO.

BENCH MARKS

SURVEY INFORMATION
FIELD NOTES | NO. | BY | DATE

ENGINEER'S SEAL
RICARDO R. ROYBAL, NEW MEXICO, REGISTERED PROFESSIONAL ENGINEER

WILLIAM L. VREE, NEW MEXICO, 8131, REGISTERED PROFESSIONAL ENGINEER, 4/16/98

REVISIONS | NO. | DATE | REMARKS | BY

DESIGN
DESIGNED BY | DATE
DRAWN BY C.O.A. STANDARDS | DATE
CHECKED BY | DATE

CITY OF ALBUQUERQUE
PUBLIC WORKS DEPARTMENT
ENGINEERING DEVELOPMENT GROUP

TITLE: **SIGNING AND CONSTRUCTION TRAFFIC CONTROL STANDARDS**

DESIGN REVIEW COMMITEE	CITY ENGINEER APPROVAL	LAST UPDATE	MO./DAY/YR.	MO./DAY/YR.

PROJECT NO. 562181 | MAP NO. E-22 | SHEET 15B OF 36

CTCSTND1.DWG

SCANNED BY
BY LASON

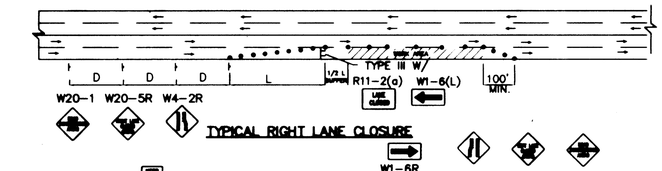

TYPICAL RIGHT LANE CLOSURE

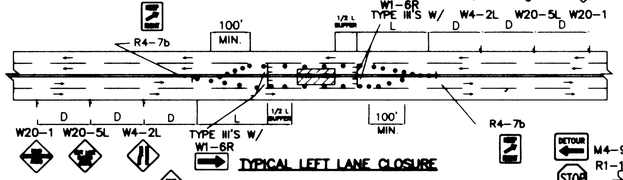

TYPICAL LEFT LANE CLOSURE

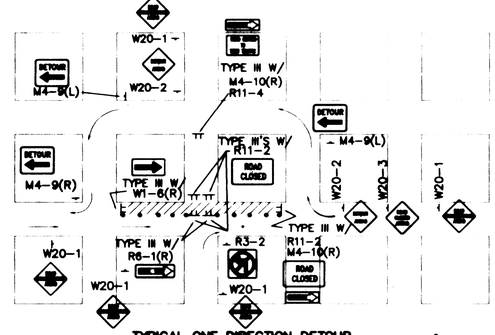

TYPICAL ONE DIRECTION DETOUR

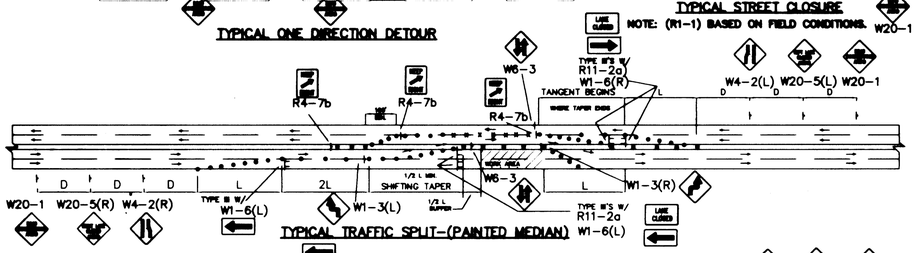

TYPICAL TRAFFIC SPLIT-(PAINTED MEDIAN)

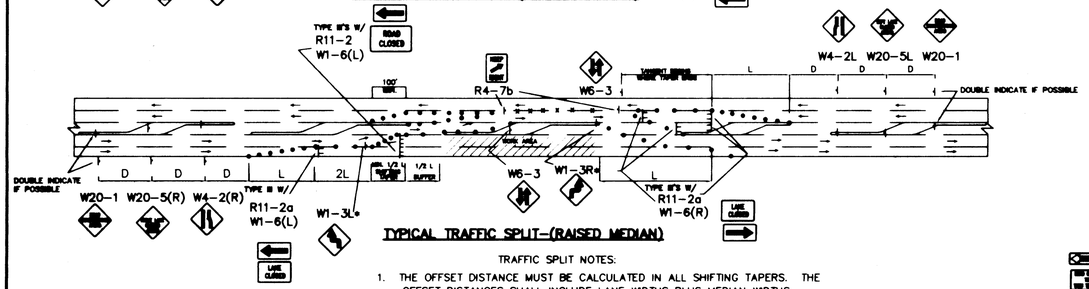

TYPICAL TRAFFIC SPLIT-(RAISED MEDIAN)

TRAFFIC SPLIT NOTES:

1. THE OFFSET DISTANCE MUST BE CALCULATED IN ALL SHIFTING TAPERS. THE OFFSET DISTANCES SHALL INCLUDE LANE WIDTHS PLUS MEDIAN WIDTHS.
2. 1/2 L IS MINIMUM DISTANCE FOR SHIFTING TAPERS.
3. REVERSE CURVES MAY BE IMPLEMENTED. ALL CURVE DATA SHALL BE CALCULATED.
4. MEDIAN REMOVAL SHALL BE REQUIRED IF 1/2 L OR REVERSE CURVE IS NOT SUFFICIENT. MEDIAN REMOVAL SHALL TAKE PLACE BEFORE SPLITS.
5. REDUCED SPEED MAY BE CONSIDERED.
6. * USE W1-3 FOR 30 MPH OR LESS, W1-4 FOR SPEED 35 MPH OR GREATER.

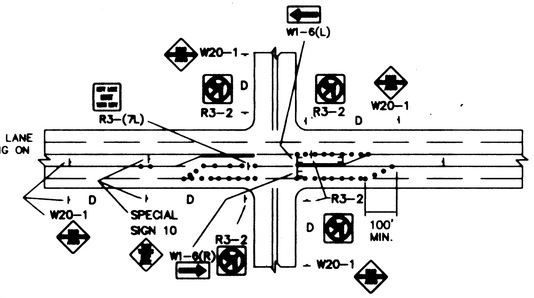

TYPICAL LANE CLOSURE AT INTERSECTION

NOTE: DEPENDING ON WORK ZONE LOCATION

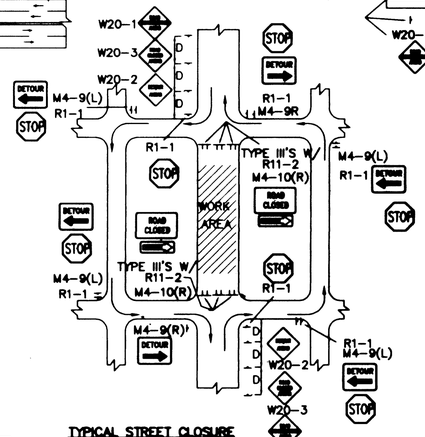

TYPICAL STREET CLOSURE

NOTE: (R1-1) BASED ON FIELD CONDITIONS.

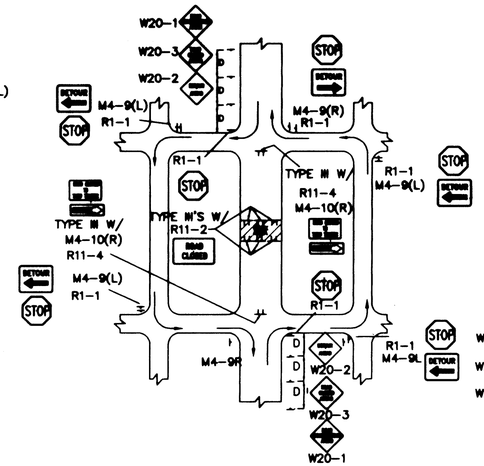

TYPICAL MID-BLOCK CLOSURE

NOTE: (R1-1) BASED ON FIELD CONDITIONS.

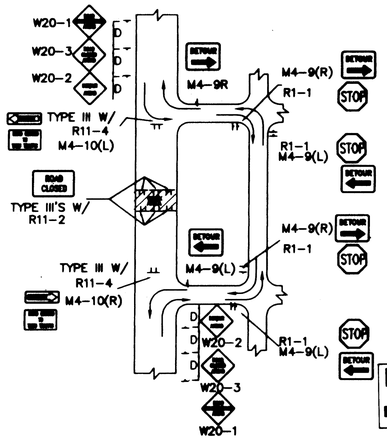

TYPICAL STREET CLOSURE

NOTE: (R1-1) BASED ON FIELD CONDITIONS.

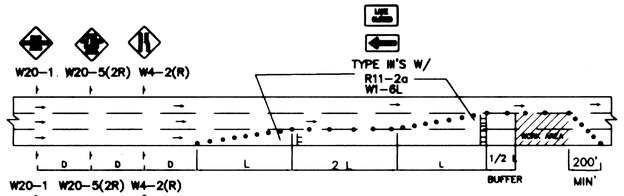

TYPICAL DOUBLE RIGHT LANE CLOSURE

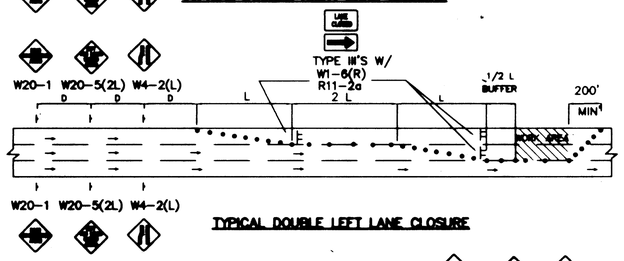

TYPICAL DOUBLE LEFT LANE CLOSURE

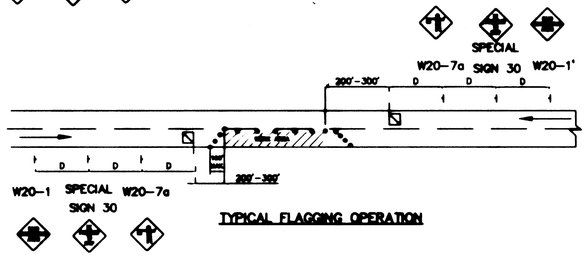

TYPICAL FLAGGING OPERATION

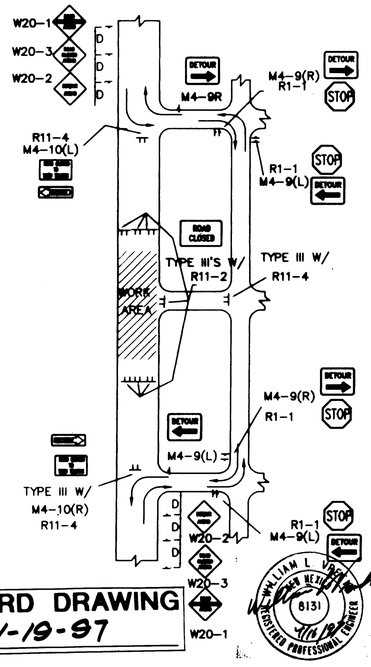

TYPICAL STREET CLOSURE

NOTE: (R1-1) BASED ON FIELD CONDITIONS.

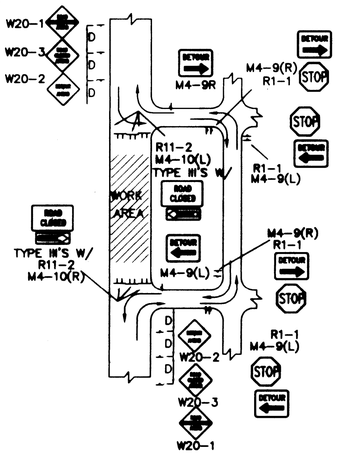

TYPICAL STREET CLOSURE

NOTE: (R1-1) BASED ON FIELD CONDITIONS.

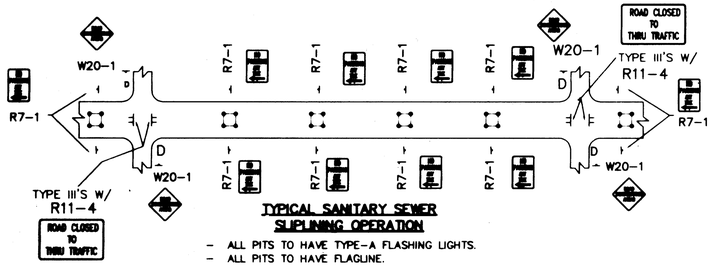

TYPICAL SANITARY SEWER SLIPLINING OPERATION

- ALL PITS TO HAVE TYPE-A FLASHING LIGHTS.
- ALL PITS TO HAVE FLAGLINE.

GENERAL NOTE:

ALL CONSTRUCTION WARNING SIGNS SHALL HAVE A BLACK LEGEND ON A ORANGE BACKGROUND.

ALL ADVANCE WARNING SIGNS SHALL BE A MINIMUM OF FORTY EIGHT (48) INCHES BY FORTY EIGHT (48) INCHES IN SIZE AND SHALL HAVE ONE WARNING LIGHT.

RECORD DRAWING
DATE: 11-19-97

WILLIAM L. VAN HEZIK 8131 REGISTERED PROFESSIONAL ENGINEER 11/19/97

AS BUILT INFORMATION
CONTRACTOR Haynes Corp. DATE 10/97
STAKED BY DATE
FIELD CHECKED BY BH DATE 10/97
PLANS CORRECTED BY BH DATE 10/97
MICRO-FILM INFORMATION
REVIEWED BY DATE

BENCH MARKS

SURVEY INFORMATION
FIELD NOTES

NO.	BY	DATE

ENGINEER'S SEAL

NO.	DATE	REMARKS	BY
		REVISIONS	
		DESIGN	

DESIGNED BY C.O.A. STANDARDS DATE
DRAWN BY DATE
CHECKED BY DATE

CITY OF ALBUQUERQUE
PUBLIC WORKS DEPARTMENT
ENGINEERING DEVELOPMENT GROUP

TITLE: TYPICAL TRAFFIC CONTROL & SIGNING EXAMPLES (REF. M.U.T.C.D.)

DESIGN REVIEW COMMITTEE	CITY ENGINEER APPROVAL	LAST UPDATE	MO./DAY/YR.	MO./DAY/YR.
SCANNED BY BY LASON				

PROJECT NO. 562181 | MAP NO. E-22 | SHEET 15c OF 36

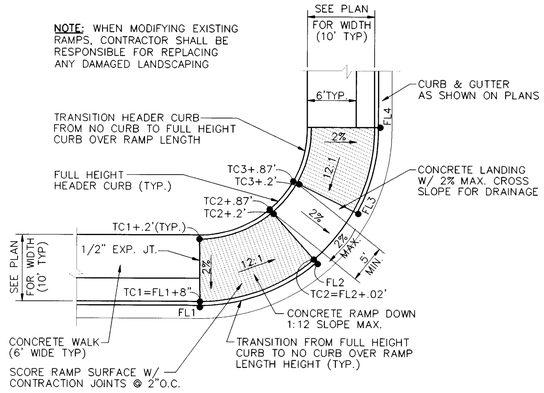

WHEEL CHAIR RAMP TYPE "A"

NOT TO SCALE

STATIONS AND ELEVATIONS FOR FL1, FL2, FL3, FL4, AND TC1, TC2, TC3, AND TC4 ARE GIVEN ON THE PAVING PLAN & PROFILE SHEETS

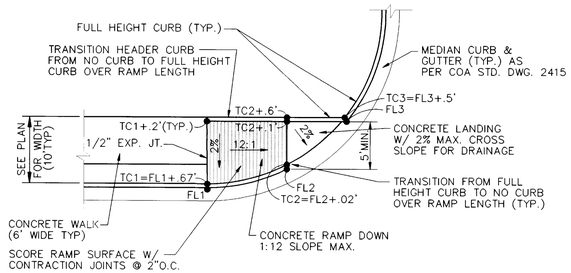

WHEEL CHAIR RAMP TYPE "B"

NOT TO SCALE

STATIONS AND ELEVATIONS FOR FL1, FL2, FL3, AND TC1, TC2, TC3 ARE GIVEN ON THE PAVING PLAN & PROFILE SHEETS

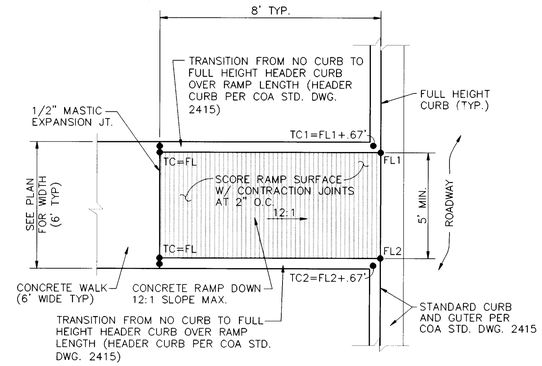

WHEEL CHAIR RAMP TYPE "C"

NOT TO SCALE

STATIONS AND ELEVATIONS FOR FL1, FL2, AND TC1, TC2, ARE GIVEN ON THE PAVING PLAN & PROFILE SHEETS

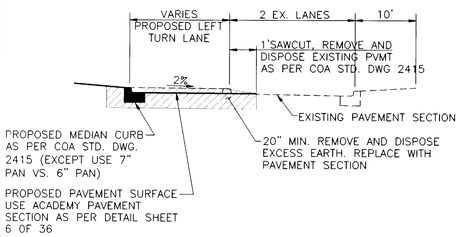

SECTION A-A

ACADEMY LEFT TURN LANE

NOT TO SCALE

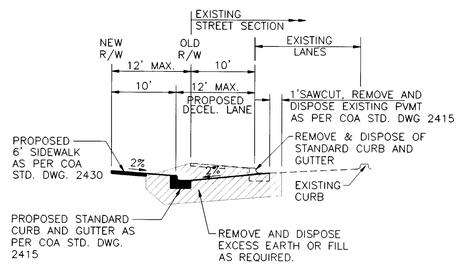

SECTION B-B

ACADEMY RIGHT TURN-DECEL. LANE AT TENNYSON RD.

NOT TO SCALE

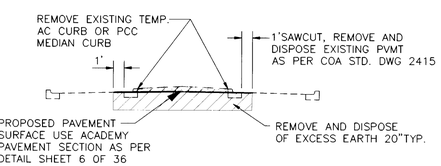

SECTION C-C

ACADEMY MEDIAN CUT

NOT TO SCALE

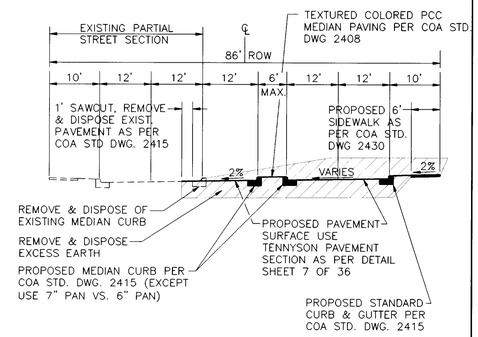

SECTION D-D

TENNYSON ST. W/ 86' R/W

NOT TO SCALE

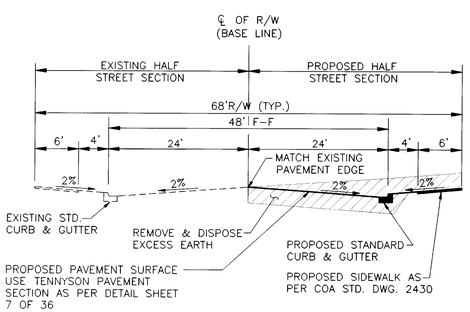

SECTION E-E

TENNYSON ST W/ 68' R/W.

NOT TO SCALE

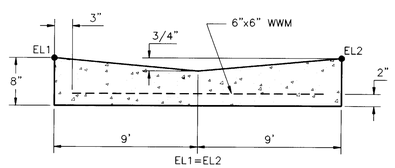

SECTION F-F

18' WIDE VALLEY GUTTER

(ALSO REFERENCE COA STD DWG 2420)

NOT TO SCALE

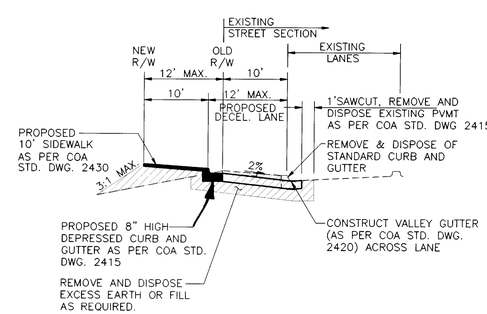

SECTION G-G

ACADEMY RIGHT TURN-DECEL. LANE AT JEWEL OSCO ENTRANCE

NOT TO SCALE

SURVEY INFORMATION			
FIELD NOTES			
NO.	BY	DATE	

BENCH MARKS	
NGS/ACS ALUMINUM TABLET STAMPED "TUMBLE"	
GEOGRAPHIC POSITION (NAD 1927)	
N.M. STATE PLANE COORDINATES (CENTRAL ZONE)	
X=425,465.55, Y=1,513,470.01	
GROUND-TO-GRID FACTOR=0.9996197	
∆α=00° 08' 37"	
ELEVATION=5009.155	

AS-BUILT INFORMATION		
CONTRACTOR	Jaynes Corp.	DATE 10/97
STAKED BY	BH	DATE 10/97
INSPECTOR'S ACCEPTANCE BY	BH	DATE 10/97
FIELD VERIFICATION BY	BH	DATE 10/97
DRAWING CORRECTED BY	BH	DATE 10/97
MICRO-FILM INFORMATION		
RECORDED BY:		DATE
NO.		

ENGINEER'S SEAL

5/1/97

NO.	DATE	REMARKS	BY
		REVISIONS	
		DESIGN	

DESIGNED BY: MSJ DATE: 4/29/97
DRAWN BY: RWB DATE: 4/29/97
CHECKED BY: MSJ DATE: 4/29/97

12-01-97

RECORD DRAWING
DATE: 11-19-97

BOHANNAN-HUSTON INC.
ENGINEERS • PLANNERS • PHOTOGRAMMETRISTS • SURVEYORS • LANDSCAPE ARCHITECTS
ALBUQUERQUE LAS CRUCES SANTA FE

CITY OF ALBUQUERQUE
PUBLIC WORKS DEPARTMENT
ENGINEERING DEVELOPMENT GROUP

TITLE: JEWEL OSCO: MISCELLANEOUS DETAILS
ROAD SECTIONS & HANDICAP RAMPS

DESIGN REVIEW COMMITTEE	CITY ENGINEER APPROVAL	LAST DESIGN UPDATE	MO./DAY/YR.	MO./DAY/YR.

CITY PROJECT NO.	ZONE MAP NO.	SHEET	OF
562181	E-22	15D	36

BHI PROJ. NO. C96238A2450
FILENAME: BHI-MAIN\96238\CDP\A-2450 PUBLIC INFRASTRUCTURE\DWG\JJ_DET2.dwg

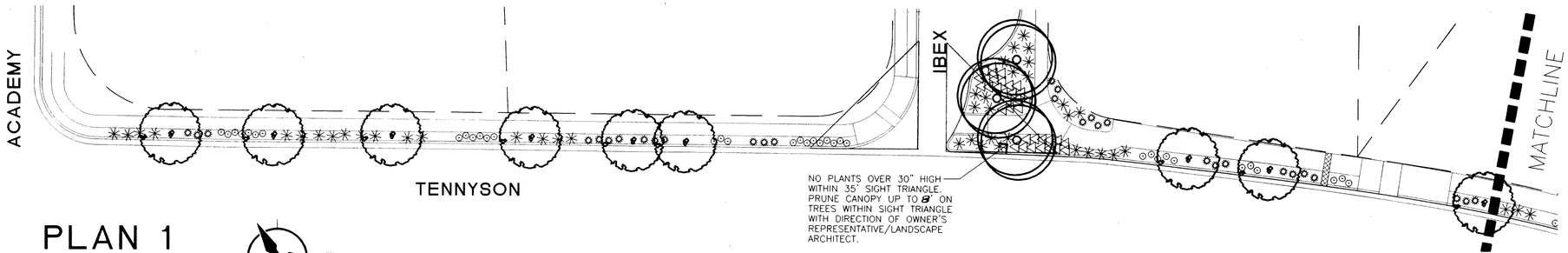

PLAN 1

20 10 0 20
1"=20'

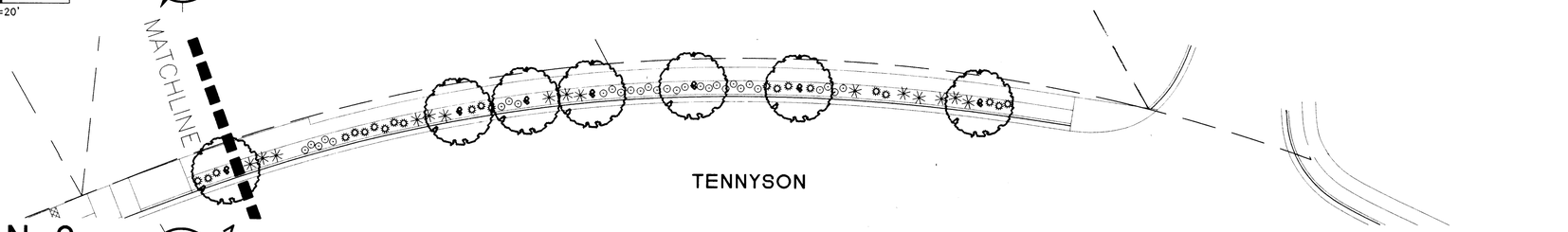

PLAN 2

20 10 0 20
1"=20'

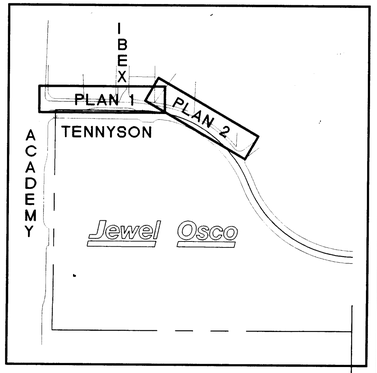

KEY PLAN

PLANT LIST

SYMBOL	QUANTITY	BOTANICAL NAME	COMMON NAME	SIZE	NOTES	MATURE WIDTH x HEIGHT	WATER USE
		TREES					
	15	Quercus emoryi	EMORY OAK	2" CAL.	24" BOX SINGLE-TRUNK	20' x 25'	
	3	Quercus texana "Buckleyi"	TEXAS RED OAK	2" CAL.	24" BOX SINGLE-TRUNK	25' x 30'	
		SHRUBS/PERENNIALS					
✳	57	Artemisia ludoviciana	PRAIRIE SAGE	5 GAL.	CONTAINER	4' x 2'	LOW
⊙	66	Chrysothamnus nauseosus var. nauseosus	DWARF CHAMISA	5 GAL.	CONTAINER	2' x 2'	LOW
✪	49	Hesperaloe parviflora	RED YUCCA	5 GAL.	CONTAINER	4' x 3'	MED.
▽	35	Salvia greggii	CHERRY SAGE	1 GAL.	CONTAINER 2' O.C.	3' x 2'	MED.

A. TREE.
B. PLANTING SOIL MIXTURE. (REFER TO SPECIFICATIONS)
C. EXISTING CURB
D. SEE PLAN FOR MULCH MATERIAL.
E. EXISTING SIDEWALK
F. UNDISTURBED SOIL.

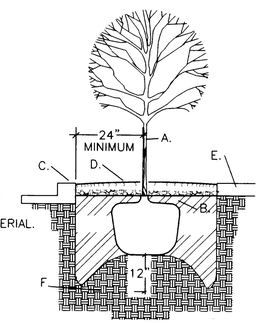

TREE PLANTING

NOTES:

1. STABILIZE SOIL BELOW ROOT BALL PRIOR TO PLANTING TO PREVENT TREE FROM SETTLING.
2. TOP OF ROOTBALL INDICATES LEVEL AT WHICH TREE WAS GROWN AND DUG; THIS REPRESENTS THE LEVEL AT WHICH THE TREE SHOULD BE INSTALLED; THAT LEVEL MAY ONLY BE EXCEEDED BY A ONE INCH LAYER OF SOIL.
3. PRIOR TO BACKFILLING TREE, ALL WIRE, ROPE AND SYNTHETIC MATERIALS SHALL BE REMOVED FROM THE TREE AND THE PLANTING PIT.
4. PRIOR TO BACKFILLING, TOP 1/3 OF BURLAP SHALL BE CUT AWAY FROM THE ROOTBALL.
5. LOCATE TRUNK LINE AT LEAST 24" FROM BACK OF CURB.
6. NO WATERPROOF MEMBRANE AGAINST BACK OF CURB REQUIRED BECAUSE OF LOW VOLUME OF DRIP IRRIGATION AND INFREQUENT WATERING SCHEDULE REQUIRED BY LOW AND MEDIUM WATER-USE PLANTS

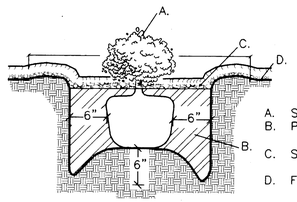

A. SHRUB/PERENNIAL
B. PLANTING SOIL MIXTURE (SEE SPECIFICATIONS)
C. SEE PLAN FOR MULCH MATERIAL.
D. FINISH GRADE

SHRUB/PERENNIAL PLANTING

PLANTING NOTES

GENERAL

* SCOPE: WORK COVERED IN THESE NOTES CONSISTS OF THE PLANTING OF TREES, SHRUBS, GROUNDCOVERS AND IRRIGATION, INCLUDING THE FURNISHING OF ALL LABOR, EQUIPMENT, AND MATERIALS; AND PERFORMING ALL WORK IN CONNECTION WITH THE DRAWINGS AND SPECIFICATIONS.

PLANTINGS

* PLANT MATERIAL SUBSTITUTIONS SHALL NOT BE MADE WITHOUT THE WRITTEN PERMISSION OF THE OWNER'S REPRESENTATIVE. THE USE OF MATERIALS DIFFERING IN KIND, QUALITY OR SIZE FROM THAT SPECIFIED WILL BE ALLOWED ONLY AFTER THE OWNER'S REPRESENTATIVE IS CONVINCED THAT ALL MEANS OF OBTAINING THE SPECIFIED MATERIALS HAVE BEEN EXHAUSTED. AT THE TIME BIDS ARE SUBMITTED, THE CONTRACTOR IS ASSUMED TO HAVE LOCATED THE MATERIALS NECESSARY TO COMPLETE THE JOB AS SPECIFIED. ALL REQUESTS FOR SUBSTITUTIONS MUST BE SUBMITTED NO LATER THAN 2 WEEKS PRIOR TO THE INITIATION OF WORK.
* ALL PLANTS SHALL BY TYPICAL OF THEIR SPECIES OR VARIETY. ALL PLANTS SHALL HAVE NORMAL, WELL DEVELOPED BRANCHES AND VIGOROUS ROOT SYSTEMS. THEY SHALL BE SOUND, HEALTHY, VIGOROUS, FREE FROM DEFECTS, DISFIGURING KNOTS, ABRASIONS OF THE BARK, SUNSCALD INJURIES, PLANT DISEASES, INSECT EGGS, BORES AND ALL OTHER FORMS OF INFECTIONS.
* PLANT MATERIAL QUALITY, SIZE AND CONDITION SHALL BE IN ACCORDANCE WITH AMERICAN STANDARD FOR NURSERY STOCK, 1990 EDITION, AS PUBLISHED BY THE AMERICAN ASSOCIATION OF NURSERYMEN.
* UNLESS OTHERWISE STATED ON THE DRAWINGS OR APPROVED BY OWNER'S REPRESENTATIVE, ALL PLANTS SHALL BE NURSERY GROWN AND SHALL BE TAGGED WITH NURSERY LABELS INDICATING SPECIES AND VARIETY.
* CONTAINER GROWN PLANT MATERIAL SHALL HAVE BEEN ESTABLISHED IN ITS DELIVERY CONTAINER FOR NOT LESS THAN SIX MONTHS, BUT FOR NOT MORE THAN TWO YEARS. ANY ROOTBOUND MATERIAL WILL NOT BE ACCEPTED.
* BALLED AND BURLAPPED PLANT MATERIAL SHALL HAVE A SOLID BALL OF EARTH OF MINIMUM SPECIFIED SIZE AND HELD IN PLACE SECURELY BY BURLAP AND A STOUT TWINE OR ROPE. BROKEN OR LOOSE BALLS WILL BE REJECTED.
* ALL PLANT MATERIAL SHALL HAVE A UNIFORM SHAPE AROUND ITS COMPLETE CIRCUMFERENCE. PLANT MATERIAL WITH TYPICAL BRANCHING PATTERNS THAT ARE NOT UNIFORM SHALL BE ACCEPTABLE AS NOTED ON PLANT LEGEND. REFERENCE THE PLANT LEGEND FOR ADDITIONAL REQUIREMENTS.
* THE OWNER'S REPRESENTATIVE SHALL INSPECT ALL PLANT MATERIAL AT THE CONTRACTOR'S YARD PRIOR TO DELIVERY, DURING PLANTING AND AFTER PLANTING AT THE JOB SITE.
* AT THE OPTION OF THE CONTRACTOR, THE OWNER'S REPRESENTATIVE WILL INSPECT PLANT MATERIAL AT A WHOLESALE NURSERY OF THE CONTRACTOR'S CHOICE PRIOR TO DELIVERY OF MATERIALS TO THE CONTRACTOR'S YARD.
* THE OWNER'S REPRESENTATIVE SHALL BE THE JUDGE OF THE QUALITY AND ACCEPTABILITY OF ALL PLANT MATERIALS. ALL REJECTED MATERIAL SHALL BE IMMEDIATELY REMOVED FROM THE SITE AND REPLACED WITH ACCEPTABLE MATERIAL AT NO ADDITIONAL COST TO OWNER.
* NO COLLECTED PLANTS WILL BE ACCEPTED
* RE-USE EXISTING GRAVEL MULCH. EXISTING BLACK PLASTIC FABRIC TO REMAIN IN PLANTING AREA. OPENINGS SHALL BE MADE IN PLASTIC TWICE THE SIZE OF PLANT TO BE INSTALLED. IN ADDITION, MAKE 3"-4" CUTS IN PLASTIC 12" O.C. IN BOTH DIRECTIONS.

MAINTENANCE

* CONTRACTOR SHALL BE RESPONSIBLE FOR MAINTENANCE AND PROTECTION OF TREES, SHRUBS, AND GROUNDCOVERS FROM THE TIME OF INSTALLATION THROUGHOUT THE DURATION OF THE WARRANTY PERIOD.

MULCHING

* ALL LANDSCAPE AREAS SHOWN ON PLANS SHALL BE MULCHED AS PER PLANS, DETAILS AND SPECIFICATIONS.

WARRANTY

* ALL TREES, SHRUBS AND GROUNDCOVERS SHALL BE GUARANTEED FROM THE TIME OF INSTALLATION UNTIL 60 DAYS AFTER THE ISSUANCE OF THE CERTIFICATE OF OCCUPANCY FOR ADJACENT JEWELL OSCO STORE OR UNTIL DECEMBER 31, 1997, WHICHEVER COMES LATER.

WILLIAM L. VREELAND NEW MEXICO 8131 REGISTERED PROFESSIONAL ENGINEER 11/19/97

RECORD DRAWING
DATE: 11-19-97

AS-BUILT INFORMATION
CONTRACTOR: Jaynes Corp. DATE 10/97
WORK STAKED BY: BH DATE 10/97
WORK ACCEPTANCE BY: BH DATE 10/97
FIELD VERIFICATION BY: BH DATE 10/97
DRAWINGS CORRECTED BY: BH DATE 10/97

BENCH MARKS

SURVEY INFORMATION
FIELD NOTES
NO. | BY | DATE

MICRO-FILM INFORMATION
RECORDED BY | DATE
NO.

ENGINEER'S SEAL
5-1-97

NO.	DATE	REMARKS	BY
		REVISIONS	
		DESIGN	
		DESIGNED BY DJA/TAG	DATE 11/96
		DRAWN BY DJA	DATE 11/96
		CHECKED BY TAG	DATE 11/96

BOHANNAN-HUSTON INC.
ENGINEERS • PLANNERS • PHOTOGRAMMETRISTS • SURVEYORS • LANDSCAPE ARCHITECTS
ALBUQUERQUE LAS CRUCES SANTA FE

CITY OF ALBUQUERQUE
PUBLIC WORKS DEPARTMENT
ENGINEERING DEVELOPMENT GROUP

TITLE: JEWEL OSCO OFFSITE IMPROVEMENTS
TENNYSON LANDSCAPING PLAN/DETAILS/NOTES

DESIGN REVIEW COMMITTEE: APPROVED — DESIGN REVIEW COMMITTEE
CITY ENGINEER APPROVAL
LAST DESIGN UPDATE | MO./DAY/YR. | MO./DAY/YR.

CITY PROJECT NO. 562181 | ZONE MAP NO. E-22 | SHEET 16 OF 36

PROJECT NO.: L96238A12612
FILENAME: TNYSPLO1.DWG
XREFS: OSCOBASE.DWG

SCANNED BY BY LASON

COPYRIGHT BOHANNAN-HUSTON, INC. 1/97

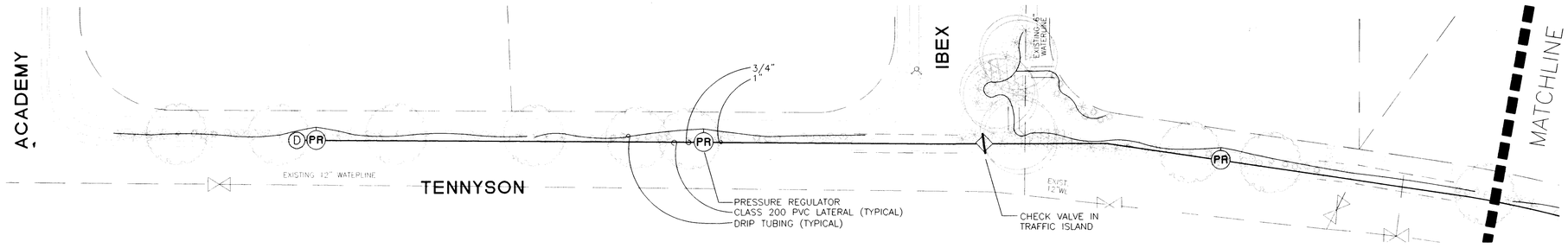

PLAN 1

20 10 0 20
1"=20'

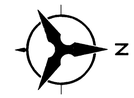

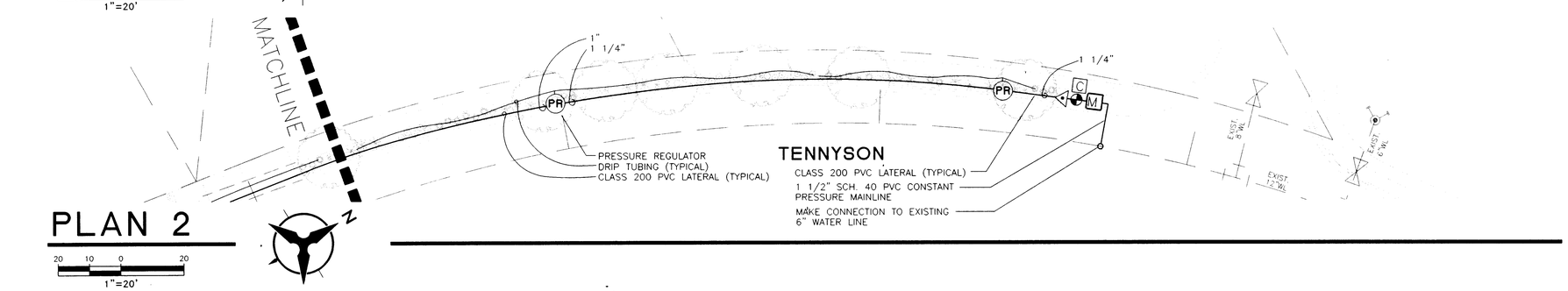

PLAN 2

20 10 0 20
1"=20'

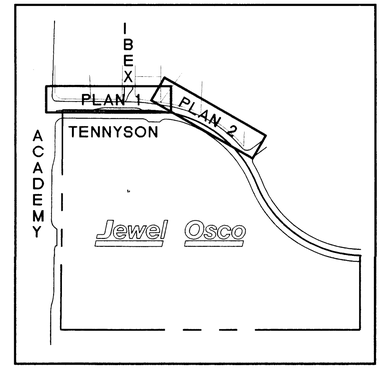

KEY PLAN

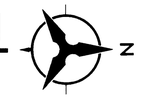

IRRIGATION LEGEND

- [M] 1" WATER METER BY CONTRACTOR
- [C] SOLATROL 4000 CONTROLLER (LEIT 4000) AND ACTUATOR (LEMA 1524-4) MOUNTED ON COLUMN (MCOL 4000) WITH TWO KEYS (TOOL 3000)
- WEATHERMATIC 21000 SERIES ELECTRIC 1 1/2" MASTERVALVE AND FEBCO 1 1/2" 765 PVB BACKFLOW ASSEMBLY WITH NETAFIM 140 MESH 1 1/2" DISC FILTER (DF150-140) IN STRONG BOX SBBC-30AL ALUMINUM ENCLOSURE.
- (D) CHAMPION 100RS-100 3/4" MANUAL DRAIN ASSEMBLY. LOCATE AT LOW POINTS OF MAINLINE.
- (PR) PEPCO INLINE PRESSURE REGULATOR (PR20)
- SLO CHECK VALVE, MODEL 1011, SIZE AS PER LATERAL SIZE.
- HARDIE E-2 DBK08 OR DBK04 EMITTER ON 3/4" POLY TUBING. SEE EMITTER SCHEDULE BELOW.
- LATERAL CLASS 200 PVC (SIZE AS PER PIPE SIZING CHART)
- CLASS 200 SLEEVES, SIZE TWO SIZES LARGER THAN PIPE TO BE SLEEVED.

EMITTER SCHEDULE

EMITTERS FOR SHRUBS AND GROUND COVERS SHALL BE INSTALLED AS PER THE FOLLOWING CHART:

SPECIES	NO. OF EMITTERS	MODEL/GPH
EMORY OAK TEXAS RED OAK	6 PER PLANT, TYPICAL	DBK16/4GPH
DWARF CHAMISA CHERRY SAGE PRAIRIE SAGE RED YUCCA	2 PER PLANT, TYPICAL	DBK16/4GPH

AS-BUILT INFORMATION
CONTRACTOR: Jaynes Corp. DATE: 10/97
WORK STAKED BY: BH DATE: 10/97
INSPECTOR'S ACCEPTANCE BY: BH DATE: 10/97
FIELD VERIFICATION BY: BH DATE: 10/97
DRAWINGS CORRECTED BY: BH DATE: 10/97
MICRO-FILM INFORMATION
RECORDED BY DATE
NO.

BENCH MARKS

SURVEY INFORMATION
FIELD NOTES
NO. BY DATE

ENGINEER'S SEAL
STATE OF NEW MEXICO · THOMAS G. GAY · No. 3A · REGISTERED LANDSCAPE ARCHITECT
5-1-97

NO.	DATE	REMARKS	BY
		REVISIONS	
		DESIGN	
		DESIGNED BY TAG/DJA	DATE 11/96
		DRAWN BY DJA	DATE 11/96
		CHECKED BY TAG	DATE 11/96

WILLIAM F. VREELAND · NEW MEXICO · 8131 · REGISTERED PROFESSIONAL ENGINEER

RECORD DRAWING
DATE: 11-19-97

BOHANNAN-HUSTON INC.
ENGINEERS • PLANNERS • PHOTOGRAMMETRISTS • SURVEYORS • LANDSCAPE ARCHITECTS
ALBUQUERQUE LAS CRUCES SANTA FE

CITY OF ALBUQUERQUE
PUBLIC WORKS DEPARTMENT
ENGINEERING DEVELOPMENT GROUP

TITLE: JEWEL OSCO OFFSITE IMPROVEMENTS
TENNYSON IRRIGATION PLAN

DESIGN REVIEW COMMITTEE | CITY ENGINEER APPROVAL | LAST DESIGN UPDATE | MO./DAY/YR. | MO./DAY/YR.

CITY PROJECT NO. 562181 | ZONE MAP NO. E-22 | SHEET 17 OF 36

PROJECT NO.: L96238A12612
FILENAME: TNYSIR01.DWG
XREFS: OSCOBASE.DWG

SCANNED BY BY LASON

COPYRIGHT BOHANNAN-HUSTON, INC. 1/97

IRRIGATION NOTES

GENERAL

- WORK UNDER THIS SECTION CONSISTS OF INSTALLING A COMPLETE UNDERGROUND IRRIGATION SYSTEM AS SHOWN ON THESE PLANS, DETAILS AND SPECIFICATIONS. THE CONTRACTOR PERFORMING THIS WORK SHALL FURNISH ALL LABOR, EQUIPMENT, MATERIALS AND PERMITS NECESSARY FOR THE COMPLETION OF THE IRRIGATION SYSTEM, EXCEPT FOR THOSE COMPONENTS SPECIFIED TO BE FURNISHED BY OTHERS.
- THE CONTRACTOR SHALL BE FAMILIAR WITH THESE PLANS, DETAILS AND SPECIFICATIONS AS THEY PERTAIN TO THE SITE. IT SHALL BE THE CONTRACTOR'S RESPONSIBILITY TO NOTIFY THE OWNER'S REPRESENTATIVE OF ANY ITEMS THAT ARE IN CONFLICT WITH THE PROPOSED CONTRACT.
- EXISTING UTILITY LINES ARE TO BE BLUE STAKED PRIOR TO EXCAVATION FOR IRRIGATION LINES AND EQUIPMENT. CHECK AND FIELD VERIFY ALL SITE CONDITIONS, UTILITIES AND SERVICES PRIOR TO TRENCHING. CALL N.M. ONE CALL AT 260-1990 FOR BLUE STAKING.
- RIGHT OF WAY VARIES AND IS NOTED ON DRAWINGS. AT NO TIME SHALL CONTRACTOR PERFORM WORK OR DISTURB AREAS BEYOND RIGHT OF WAY LIMIT.
- ALL PLANT MATERIALS SHALL BE IRRIGATED WITH AUTOMATIC IRRIGATION SYSTEMS AS PER PLANS, DETAILS AND SPECIFICATIONS UNLESS OTHERWISE INDICATED ON THE DRAWING.
- WHERE PIPING, DRIP EMITTERS, ETC. ARE OBSTRUCTED BY TREES, LIGHT STANDARDS, ETC., THEY SHALL BE ADJUSTED AND/OR RELOCATED AS NECESSARY TO OBTAIN FULL COVERAGE WITHOUT EXCESSIVE OVERFLOW.
- CONTRACTOR SHALL FLUSH ALL LINES PRIOR TO INSTALLING EMITTERS.
- PLANS ARE DIAGRAMMATIC AND APPROXIMATE DUE TO SCALE OF DRAWINGS. ALL VALVES SHALL BE LOCATED IN PLANTING AREAS WHERE SHOWN. ALL SLEEVES SHALL BE INSTALLED PRIOR TO PAVING AND ALL PIPING SHALL BE INSTALLED PRIOR TO PLANTING. NO TEES, ELLS OR OTHER TURNS IN PIPING SHALL BE LOCATED UNDER PAVING. CAP ALL ENDS HAND TIGHT PRIOR TO BACKFILL.
- COMPLY WITH REQUIREMENTS OF THE UNIFORM PLUMBING CODE AND ANY OTHER GOVERNMENTAL BODIES HAVING JURISDICTION.
- REFER TO IRRIGATION DETAILS, SPECIFICATIONS AND MANUFACTURERS RECOMMENDATIONS FOR ALL INSTALLATION PROCEDURES NOT FULLY DESCRIBED ON THE IRRIGATION PLANS.
- ALL BACKFILLING SHALL BE CLEAN MATERIAL FROM EXCAVATION. BACKFILLED TRENCH IS TO BE EVEN WITH EXISTING GRADES AFTER COMPACTION.
- TRENCH BACKFILL MATERIAL SHALL BE COMPACTED TO 85% PROCTOR DENSITY.
- ALL VALVES TO BE IN APPROVED VALVE BOXES. LOCATE VALVE BOXES IN GROUPS OF TWO OR THREE AND NEAR WALKWAYS WHEREVER POSSIBLE.
- COORDINATE PROGRAMS TO AVOID STATION OVERLAP.
- ALL CONTROLLER WIRING UNDER PAVEMENT SHALL BE SLEEVED WITH CLASS 200 PVC. CONTROLLER STATIONS SHALL BE WIRED AS PER VALVE LEGEND.
- IRRIGATION AS SHOWN IS SCHEMATIC. LINES MAY BE SHOWN UNDER PAVED AREAS FOR READABILITY. ALL IRRIGATION LINES SHALL RUN FROM PLANTER TO PLANTER, AS APPLICABLE.
- DEPTH OF BURY SHALL BE 28" FOR CONSTANT PRESSURE MAINLINE. 18" TO 20" FOR MAINLINE DOWNSTREAM OF THE MASTERVALVE, AND 18" FOR ALL LATERAL LINES.
- MANUAL DRAINS ARE TO BE FIELD LOCATED AND INSTALLED AT LOW POINTS IN THE MAINLINE AS DETERMINED BY FIELD SURVEY.
- ALL TESTING GAUGES AND VALVES AS INSTALLED SHALL BE LABELED AS PER VALVE STATIONS AS SHOWN ON THESE PLANS.
- VALVE BOXES SHALL BE INSTALLED IN PLACE PRIOR TO ANY PRESSURE TESTING TO ENSURE PROPER GRADING.
- EXISTING SLEEVE LOCATIONS AS SHOWN ARE SCHEMATIC. CONTRACTOR SHALL FIELD LOCATE ALL EXISTING SLEEVES.
- CONTRACTOR SHALL SIZE AND INSTALL ALL LATERAL PIPES AS PER PIPE SIZING CHART. ALL PIPE SIZING SHALL BE SUBMITTED TO AND APPROVED BY LANDSCAPE ARCHITECT PRIOR TO INSTALLATION. SEE PLANS.
- THE IRRIGATION SYSTEM IS DESIGNED FOR AN APPROXIMATE PRESSURE OF 78 PSI. CONTRACTOR SHALL FIELD VERIFY PRESSURE PRIOR TO INITIATION OF CONSTRUCTION. IF PRESSURES ARE NOT WITHIN THIS RANGE, CONTACT THE LANDSCAPE ARCHITECT FOR INSTRUCTION ON HOW TO PROCEED.

COMPONENTS AND PRODUCTS

- ALL COMPONENTS INSTALLED AS THE UNDERGROUND IRRIGATION SYSTEM ARE TO BE NEW AND IN GOOD WORKING ORDER AND WITHOUT FLAWS UNLESS OTHERWISE INDICATED ON THE PLANS, DETAILS AND SPECIFICATIONS.
- IF THE CONTRACT DRAWINGS AND/OR SPECIFICATIONS DO NOT THOROUGHLY DESCRIBE THE METHOD OR TECHNIQUES TO BE USED FOR INSTALLATION, THEN THE CONTRACTOR SHALL FOLLOW THE INSTALLATION METHODS RECOMMENDED BY THE MANUFACTURER.
- ALL PLANT MATERIALS INSTALLED SHALL HAVE THE AUTOMATIC IRRIGATION SYSTEM FULLY OPERABLE AT THE TIME OF PLANT INSTALLATION.

WARRANTY AND MAINTENANCE

- THE CONTRACTOR SHALL PROVIDE AND KEEP UP TO DATE A COMPLETE SET OF "AS-BUILT" DRAWINGS WHICH SHALL BE CORRECTED DAILY TO SHOW ALL CHANGES IN THE LOCATION OF HEADS.
- THE CONTRACTOR SHALL BE LIABLE FOR ANY LOSS OR DAMAGE TO ANY WORK OR MATERIALS, SUPPLIES AND EQUIPMENT ON THE JOB SITE CAUSED BY THE CONTRACTOR, ITS EMPLOYEES OR ANY OTHER UNFORESEEN CAUSE UNTIL FINAL ACCEPTANCE OF PROJECT BY THE OWNER'S REPRESENTATIVE.
- THE CONTRACTOR SHALL MAINTAIN THE IRRIGATION SYSTEM IN SATISFACTORY WORKING ORDER AND SHALL PROMPTLY FURNISH AND INSTALL, WITHOUT COST TO THE OWNER, ANY AND ALL PARTS WHICH PROVE DEFECTIVE IN MATERIAL OR WORKMANSHIP FOR A PERIOD FROM THE TIME OF INSTALLATION UNTIL 60 DAYS AFTER THE ISSUANCE OF THE CERTIFICATE OF OCCUPANCY FOR THE ADJACENT JEWELL OSCO STORE OR UNTIL DECEMBER 31, 1997, WHICHEVER COMES LATER.

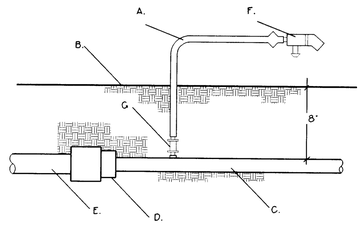

A. FLEXIBLE TUBING
B. FINISH GRADE
C. POLY PIPE
D. PVC TO POLY ADAPTER INSTALL IN INLINE PRESSURE REGULATOR VALVE BOX.
E. PVC PIPE
F. DRIP EMITTER- SEE IRRIGATION LEGEND
G. CONNECTION BARB

PVC POLY PIPE CONNECTION

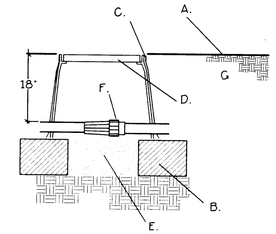

A. FINISH GRADE
B. 8" X 8" X 16" SOLID CMU BLOCK.
C. 6MM BLACK POLYETHYLENE PLASTIC TAPE TO ALL INLET AND OUTLET PIPE. INSTALL FULL LENGTH OF VALVE BOX.
D. BROOK'S PRODUCTS INC. 2200 BODY (ABS) VALVE BOX WITH EXTENSIONS.
E. 4" LAYER OF 3/4" GRAVEL
F. INLINE PRESSURE REGULATOR- SEE IRRIGATION LEGEND

INLINE PRESSURE ASSEMBLY

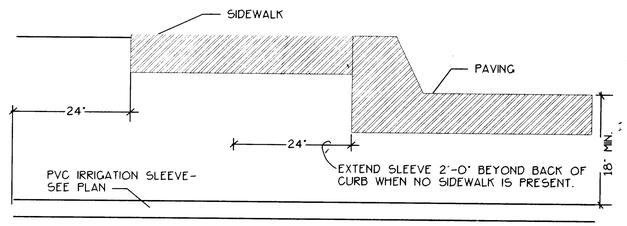

IRRIGATION SLEEVES UNDER PAVEMENT

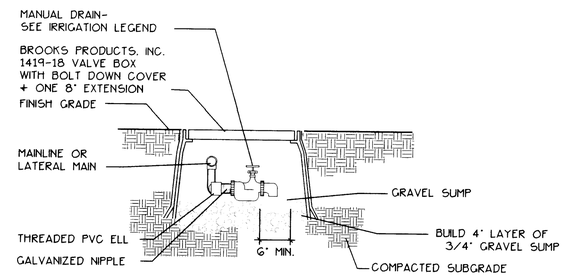

MANUAL DRAIN

GENERAL NOTES
1. PVB'S UNAPPROVED FOR CONTAINMENT PROTECTION, EXCEPT FOR LAWN IRRIGATION SYSTEMS.
2. DO NOT INSTALL IN FLOOD PRONE AREAS.
3. DO NOT INSTALL PVB'S>5 ABOVE GROUND LEVEL.
4. METALLIC RISER PIPING REQ'D.
5. JOINTS TO BE ADEQUATELY RESTRAINED.
6. HORIZONTAL INSTALLATION REQ'D. AS SHOWN.
7. LOCATE PVB 12" ABOVE HIGHEST POINT OF ALL DOWNSTREAM OUTLETS

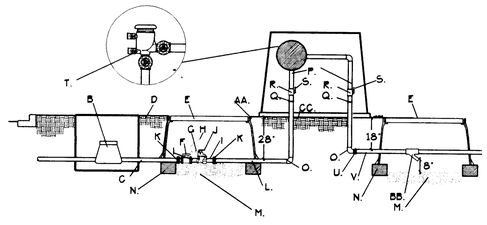

B. METER.
C. SERVICE LINE. NO OUTLETS ALLOWED.
D. FINISH GRADE
E. BROOK'S PRODUCTS INC. 1419-18 BODY (ABS) VALVE BOX WITH 1419 BOLT DOWN COVER (ABS) AND THREE 8" EXTENSIONS.
F. SPEARS TRUE UNION SCH. 80 PVC BALL VALVE
G. 24" WIRE EXPANSION COIL
H. 3M SKOTCHLOK
I. SCHEDULE 80 PVC CLOSE NIPPLE
J. ELECTRIC VALVE (SEE PLAN)
K. SPEARS SCH 80 PVC UNION
L. SCH 80 PVC NIPPLE
M. 1 CUBIC FOOT 1" DIAMETER WASHED ROCK.
N. 8" X 8" X 16" SOLID CMU BLOCK
O. GALVANIZED ELL
P. GALVANIZED NIPPLE
Q. GALVANIZED UNION, 4" ABOVE GRADE, MIN.
R. GALVANIZED TEE 6" ABOVE GRADE
S. BALL DRAIN. CHAMPION DVO50 1/2"
T. PRESSURE VACUUM BREAKER BACKFLOW PREVENTER IN INSULATED ENCLOSURE
U. PVC MIP ADAPTER
V. LATERAL
AA. 6 mm BLACK POLYETHYLENE. TAPE TO ALL INLET AND OUTLET LINES.
BB. FILTER (SEE PLAN)

IRRIGATION MASTER VALVE WITH PRESSURE VACUUM BREAKER

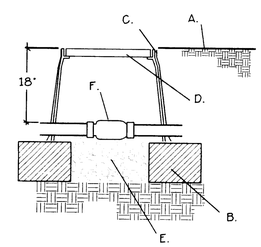

A. FINISH GRADE
B. 8" X 8" X 16" SOLID CMU BLOCK.
C. 6MM BLACK POLYETHYLENE PLASTIC TAPE TO ALL INLET AND OUTLET PIPE. INSTALL FULL LENGTH OF VALVE BOX.
D. BROOK'S PRODUCTS INC. 1419 BODY (ABS) VALVE BOX WITH 1419 BOLT DOWN COVER (ABS) AND 8" EXTENSION.
E. 4" LAYER OF 3/4" GRAVEL
F. PVC SPRING CHECK VALVE- SEE IRRIGATION LEGEND AND PLAN.

PVC SPRING CHECK VALVE

AS-BUILT INFORMATION
CONTRACTOR Taynes Corp DATE 10/97
WORK STAKED BY BH DATE 10/97
INSPECTION ACCEPTANCE BY BH DATE 10/97
FIELD VERIFICATION BY BH DATE 10/97
DRAWINGS CORRECTED BY BH DATE 10/97
MICRO-FILM INFORMATION
RECORDED BY DATE
NO.

BENCH MARKS

SURVEY INFORMATION
FIELD NOTES

NO.	BY	DATE

ENGINEER'S SEAL
STATE OF NEW MEXICO — THOMAS A. GAY — No. 240 — REGISTERED LANDSCAPE ARCHITECT
5-1-97

NO.	DATE	REMARKS	BY
		REVISIONS	

DESIGNED BY DJA/TAG DATE 11/96
DRAWN BY DJA DATE 11/96
CHECKED BY TAG DATE 11/96

BOHANNAN-HUSTON INC.
ENGINEERS • PLANNERS • PHOTOGRAMMETRISTS • SURVEYORS • LANDSCAPE ARCHITECTS
ALBUQUERQUE LAS CRUCES SANTA FE

CITY OF ALBUQUERQUE
PUBLIC WORKS DEPARTMENT
ENGINEERING DEVELOPMENT GROUP

TITLE: JEWEL OSCO OFFSITE IMPROVEMENTS
TENNYSON IRRIGATION DETAILS/NOTES

DESIGN REVIEW COMMITTEE | CITY ENGINEER APPROVAL | LAST DESIGN UPDATE | MO./DAY/YR. | MO./DAY/YR.

CITY PROJECT NO. 562181 | ZONE MAP NO. E-22 | SHEET 18 OF 36

NEW MEXICO PROFESSIONAL ENGINEER 8131 4/16/97

RECORD DRAWING
DATE: 11-19-97

PROJECT NO.: L96238A12612
FILENAME: TNYSIRDT.DWG
XREFS: NONE

SCANNED BY BY LASON

COPYRIGHT BOHANNAN-HUSTON, INC. 1/97

SIGNAL NOTES

1. ALL WORK TO BE PERFORMED UNDER THIS CONTRACT SHALL CONFORM TO THE CURRENT NATIONAL ELECTRIC CODE, THE STANDARDS OF THE NATIONAL BOARD OF FIRE UNDERWRITERS FOR ELECTRICAL WIRING AND APPARATUS, AND THE CITY'S TRAFFIC ENGINEERING OPERATIONS THIRD DRAFT SPECIFICATIONS (JUNE 1994).
2. LOCATIONS OF CONDUITS, FOUNDATIONS, CONTROLLER CABINETS, METER PEDESTALS, POLES, PULL BOXES, MANHOLES, AND SPLICE CABINETS SHOWN ON THE PLANS ARE SCHEMATIC AND SHALL BE ADJUSTED IN THE FIELD TO MAXIMIZE CLEAR SPACE AVAILABLE FOR PEDESTRIANS AND WHEELCHAIRS TO COMPLY WITH THE AMERICANS WITH DISABILITIES ACT. THE CONTRACTOR SHALL MEET WITH THE CITY'S TRAFFIC ENGINEERING OPERATIONS PERSONNEL IN THE FIELD TO SPOT EQUIPMENT BEFORE BEGINNING THE WORK. ALL SUCH EQUIPMENT SHALL BE INSTALLED WITHIN THE RIGHT-OF-WAY.
3. THE CONTRACTOR IS WARNED THAT EXISTING CONDUITS MAY CONTAIN AC POWER AND CAUTION SHALL BE EXERCISED IN INTERCEPTING OR INSTALLING CABLE IN EXISTING CONDUIT.
4. THE CONTRACTOR SHALL BORE, DRILL, OR PUSH WHEN CROSSING EXISTING PAVEMENTS AND ANY DRIVEWAYS FOR SIDE STREET CROSSINGS. BEFORE CONDUIT CAN BE BORED, DRILLED, OR PUSHED THE CONTRACTOR SHALL LOCATE ALL EXISTING UTILITIES. THE CONTRACTOR SHALL LOCATE AND EXPOSE GAS LINES WHICH CROSS ANY PROPOSED BORES. THESE EXCAVATIONS SHALL REMAIN OPEN UNTIL AFTER THE BORE IS COMPLETE. CONTRACTOR SHALL REMOVE AND REPLACE IN KIND ANY SIDEWALK OR PAVEMENT REQUIRED TO EXPOSE SUCH LINES. THE CONTRACTOR MAY CUT, TRENCH, AND REPLACE EXISTING PAVEMENT ONLY WHEN APPROVED BY THE PROJECT MANAGER.
5. SPLICING OF COMMUNICATIONS CABLE WILL NOT BE PERMITTED IN PULL BOXES. SPLICING OF COMMUNICATIONS CABLE (CONNECTIONS) WILL BE PERMITTED ONLY AT SPLICE CABINETS OR CONTROLLER CABINETS WITH SPLICE BARS. SPLICING OF TRAFFIC SIGNALS MCC WILL BE PERMITTED IN LARGE PULL BOXES INCLUDING LARGE MEDIAN PULL BOXES. SPLICING OF VIDEO DETECTION COAXIAL CABLE WILL NOT BE PERMITTED FROM THE MASTARM JUNCTION TO THE CONTROLLER CABINET. SPLICING OF OPTICAL DETECTOR CABLE WILL NOT BE PERMITED FROM THE DETECTOR TO THE CONTROLLER CABINET.
6. ALL VIDEO DETECTION COAXIAL AND VIDEO POWER CABLES SHALL BE TAGGED AT THE CONTROL CABINET TO IDENTIFY EACH CABLE BY CAMERA NUMBER AND LOCATION. ALL OPTICAL DETECTOR CABLE SHALL BE TAGGED AT THE CONTROL CABINET TO IDENTIFY EACH BY DIRECTION AND LOCATION.
7. ALL PULL BOXES SHALL BE REINFORCED POLYMER MORTAR HEAVY DUTY TYPE WITH REINFORCED POLYMER MORTAR HEAVY DUTY COVERS. CONCRETE COVERS, STEEL COVERS, AND CONCRETE PULL BOXES WILL NOT BE ACCEPTABLE.
8. THE CONTRACTOR SHALL NOTIFY THE CITY OF ALBUQUERQUE TRAFFIC ENGINEERING OPERATIONS(857-8000) THREE WORKING DAYS IN ADVANCE OF ANY ANTICIPATED WORK ON SIGNALS AND POWER SERVICES. TRAFFIC ENGINEERING OPERATIONS PERSONNEL WILL ASSIST THE CONTRACTOR IN THE FIELD LOCATION OF EQUIPMENT, AND MUST BE PRESENT WHEN SIGNALS ARE SHUT-OFF OR TURNED ON. THE CONTRACTOR SHALL ALSO NOTIFY THE CITY OF ALBUQUERQUE TRAFFIC ENGINEERING OPERATIONS EACH TIME A TRAFFIC SIGNAL CONTROL DOOR IS OPENED.
9. THE CONTRACTOR SHALL NOTIFY PUBLIC SERVICE COMPANY 30 DAYS IN ADVANCE OF ANTICIPATED POWER SERVICE CONNECTIONS. THE CONTRACTOR SHALL COORDINATE WITH PUBLIC SERVICE COMPANY TO ESTABLISH ELECTRICAL SERVICE IN THE CITY'S NAME. THE CONTRACTOR SHALL PAY THE LOCAL POWER COMPANY ALL COSTS TO PROVIDE ELECTRICAL SERVICE. THIS WORK WILL BE CONSIDERED INCIDENTAL TO CONSTRUCTION.
10. THE CONTRACTOR SHALL REMOVE ALL CONFLICTING SIGNING AND DELIVER TO THE CITY TRAFFIC ENGINEERING YARDS WHEN TRAFFIC SIGNALS ARE PUT INTO OPERATION.
11. LIVE UNUSED CONDUCTORS WILL NOT BE ALLOWED AT MASTARM POLES AND PEDESTAL POLES. ALL SUCH UNUSED CONDUCTORS SHALL BE DISCONNECTED AT THE LARGE PULL BOX ADJACENT TO THE POLE.
12. IF TRENCH WIDTHS LESS THAN 12" ARE PROPOSED BY THE CONTRACTOR, APPROVED COMPACTION METHODS SHALL BE USED DURING BACKFILL TO PREVENT LATENT TRENCH FAILURES. THE CONTRACTOR SHALL USE GROUT OR LEAN FILL AS APPROVED BY THE PROJECT MANAGER IN LIEU OF EARTH BACKFILL.
13. FOR CONDUITS CONTAINING ONLY LOW VOLTAGE COMMUNICATIONS CABLES, THE REQUIREMENTS FOR A SINGLE CONDUCTOR BARE COPPER #8 AWG MAY BE WAIVED WHERE PERMITTED BY THE NATIONAL ELECTRIC CODE.
14. THE CITY OF ALBUQUERQUE TRAFFIC ENGINEERING OPERATIONS PERSONNEL WILL PROVIDE TRAFFIC SIGNAL TIMING PLANS AND WILL PROGRAM TRAFFIC SIGNAL CONTROLLERS.
15. EXISTING CONDUITS TO BE REMOVED OR ABANDONED SHALL HAVE ALL WIRING REMOVED.
16. EXISTING CONDUITS SHALL BE REPAIRED, ADJUSTED, OR REPLACED AS DIRECTED BY THE PROJECT MANAGER WHERE ELECTRICAL PULLBOXES OR TRAFFIC MANHOLES ARE INSTALLED OR REPLACED.
17. CONTRACTOR SHALL COIL EXCESS INTERCONNECT CABLE AT ALL NEW OR EXISTING TRAFFIC MANHOLES BETWEEN SPLICE CABINET OR CONTROL CABINETS WITH SPLICE BARS. IF MORE THAN ONE MANHOLE EXISTS BETWEEN SPLICE CABINETS OR CONTROL CABINETS WITH SPLICE BARS, THEN COILING IS ONLY REQUIRED AT ONE OF THE MANHOLES. THE FOLLOWING QUANTITIES OF COMMUNICATION CABLE SHALL BE COILED: 12 PAIR-50 FT.
18. THE CONTRACTOR SHALL ARRANGE TO HAVE OFF-DUTY POLICE OFFICERS DIRECT TRAFFIC WHEN SIGNALS ARE TURNED OFF.
19. ALL DATA SHOWN HEREIN CONCERNING EXISTING UTILITIES HAS BEEN OBTAINED FROM "AS-BUILT" DRAWINGS AND FROM FIELD OBSERVATIONS WHICH MAY OR MAY NOT BE ACCURATE. THE CONTRACTOR WILL BE RESPONSIBLE FOR EXPLORATORY TRENCHING. IF NECESSARY, TO MORE SPECIFICALLY LOCATE UTILITY LINES. COST OF LOCATING UTILITY LINES INCLUDING EXPLORATORY TRENCHING WILL BE CONSIDERED INCIDENTAL TO CONSTRUCTION.

DEFINITIONS

1. "ENGINEER" - FOR THE PURPOSES OF THIS PROJECT, THE TERM "ENGINEER" IS SYNONYMOUS WITH THE TERM "PROJECT MANAGER".

INCIDENTAL ITEMS *

1. REMOVAL OF EXISTING PULL BOXES, CONDUITS, OR OTHER SIGNAL EQUIPMENT FOR INSTALLATION OF NEW SIGNAL EQUIPMENT.
2. CABLE TESTING AND DIAGRAMS.
3. BORING, DRILLING, PUSHING, AND TRENCHING, INCLUDING REMOVAL AND REPLACEMENT OF PAVEMENT, SIDEWALKS, DRIVEPADS, VALLEY GUTTERS, WHEELCHAIR RAMPS, CURB & GUTTER, AND LANDSCAPING (INCLUDING SPRINKLERS), FOR INSTALLATION OF PULL BOXES, CONDUITS, AND SIGNAL FOUNDATIONS, EXCEPT AS NOTED ON THE PLANS.
4. LOCATION OF UTILITY LINES INCLUDING EXPLORATORY TRENCHING AND EXPOSING OF GAS LINES WHEN BORING.
5. DESIGN, MATERIALS, INSTALLATION AND REMOVAL OF SAFETY BARRIER FOR SHIELDING EQUIPMENT OR MATERIAL.
6. APPRISING PUBLIC THROUGH THE LOCAL NEWS MEDIA.
7. HAULING OF MATERIAL TO BE DISPOSED TO CITY LANDFILL.
8. LEAN FILL FOR CONDUIT TRENCHES.
9. OFF-DUTY POLICE OFFICER FOR TRAFFIC CONTROL.
10. REMOVAL AND REPLACEMENT IN KIND OR BETTER OF LANDSCAPING INCLUDING SPRINKLERS, FOR INSTALLATION OF PULL BOXES, CONDUITS AND SIGNAL FOUNDATIONS.
11. COST FOR PUBLIC SERVICE COMPANY TO PROVIDE ELECTRICAL SERVICE.

* ITEMS LISTED ARE ONLY A GENERAL DESCRIPTION OF THE REQUIRED WORK AND MATERIALS, AND MAY NOT BE COMPLETE. THIS LIST DOES NOT INCLUDE ANY INCIDENTAL WORK OR MATERIALS REQUIRED BY THE SPECIAL PROVISIONS SERIALS (STANDARD DETAILS), SUPPLEMENTAL SPECIFICATIONS, OR THE STANDARD SPECIFICATIONS.

TRAFFIC SIGNAL EQUIPMENT REQUIREMENTS

1. THIS PROJECT IS AN EXTENSION OF AN EXISTING SIGNAL SYSTEM. THEREFORE THE CONTRACTOR SHALL FURNISH AND INSTALL THE FOLLOWING:
   A. THE TRAFFIC SIGNAL CONTROLLER SUPPLIED FOR THIS PROJECT SHALL BE AN ECONOLITE MODEL ASC 2/2100.
   B. THE TRAFFIC CONTROLLER CABINET SUPPLIED FOR THIS PROJECT SHALL BE AN ECONOLITE "P" SIZE, DUAL RING, SYSTEM READY.
2. INTERCONNECT CABLES SHALL COMPLY WITH REA SPECIFICATION PE-22. INTERCONNECT PE-22. CABLE SHALL CONTAIN THE NUMBER OF WIRE PAIRS SHOWN ON THE PLANS AND THE INDIVIDUAL CONDUCTORS SHALL BE 19 AWG SOLID.
3. EMERGENCY VEHICLE PRE-EMPT EQUIPMENT SHALL BE 3M "OPTICOM" MODEL 562 PHASE SELECTORS MOUNTED ON 3M "OPTICOM" MODEL 560 RACKS, OR APPROVED EQUAL. ALL RACKS SHALL BE CAPABLE OF PROVIDING FOUR CHANNELS OF DETECTION. PHASE SELECTOR MODULES SHALL BE CAPABLE OF TWO CHANNELS OF DETECTION EACH. OPTICAL DETECTORS SHALL BE 3M "OPTICOM" MODEL 511, 1 CHANNEL, 1 DIRECTION OR APPROVED EQUAL. OPTICAL DETECTOR CABLE SHALL BE 3M "OPTICOM" MODEL 138 OR EQUAL. OPTICAL EMITTERS SHALL BE 3M "OPTICOM" MODEL 592 WITH POWER SUPPLY, CABLE, AND SWITCHES, OR APPROVED EQUAL. A MANUFACTURERS REPRESENTATIVE SHALL ASSIST THE CONTRACTOR IN THE FIELD AS WORK PROGRESSES TO COMPLETE THE INSTALLATION OF ALL PRE-EMPTION EQUIPMENT AND ASSIST IN SETTING UP, TURNING ON, PROGRAMMING AND FIELD TESTING PREEMPTION EQUIPMENT INCLUDING EMITTERS TO INSURE THAT THE EQUIPMENT IS OPERATIONAL.
4. THIS PROJECT INVOLVES THE INSTALLATION AND TEST OF A MACHINE VISION VEHICLE DETECTION SYSTEM. THEREFORE THE CONTRACTOR SHALL FURNISH AND INSTALL THE FOLLOWING:
   A. AN ODETICS VANTAGE VIDEO TRAFFIC DETECTION SYSTEM INCLUDING ALL NECESSARY CABLES, HARNESSES, MATERIALS, FITTINGS, AND MISCELLANEOUS COMPONENTS NECESSARY TO PROVIDE A COMPLETE AND OPERATING SYSTEM AT ONE (1) SIGNALIZED INTERSECTION.
   B. FOUR (4) FIXED LENS VIDEO CAMERAS.
   C. A MONITOR SHALL BE FURNISHED TO ALLOW ON-SITE DETECTOR SET-UP AND RETRIEVAL OF DATA IN THE VEHICLE DETECTION UNIT.
   D. COMPUTER SOFTWARE AND HARNESSES TO CONNECT AND OPERATE THE NEW SYSTEM.
   E. VIDEO POWER CABLE SHALL BE A THREE CONDUCTOR #12 AWG TWISTED POWER SERVICE CABLE.
   E. VIDEO COAXIAL CABLE SHALL BE LOW LOSS PRECISION CABLE SUITED FOR OUTDOOR APPLICATION. VIDEO CABLE SHALL BE BELDON 8281, WEST PENN P806, OR APPROVED EQUAL.
5. THE CONTRACTOR SHALL FURNISH TRAINING FOR THE MACHINE VISION VEHICLE DETECTION EQUIPMENT (1 DAY). THIS TRAINING SHALL BE PREFORMED WHEN THE EQUIPMENT IS FULLY OPERATIONAL AND ON A SCHEDULE APPROVED BY TRAFFIC ENGINEERING OPERATIONS PERSONNEL.
6. ALL SIGNAL ASSEMBLIES, PEDESTRIAN SIGNALS, PEDESTRIAN PUSH BUTTONS, CABINETS, AND FITTINGS SHALL COMPLY WITH THE CITY OF ALBUQUERQUE TYPE AND COLOR REQUIREMENTS.
7. EQUIPMENT VENDORS SHALL CONTACT TRAFFIC ENGINEERING OPERATIONS PERSONNEL FOR APPROVAL OF EQUIPMENT PRIOR TO BIDDING(TELEPHONE 505-857-8000).
8. ALL MASTARMS SHALL HAVE A 40' CAMERA MOUNTING HEIGHT WITH 15'ARMS.

TRAFFIC SIGNAL LEGEND

NEW	EXISTING	ITEM
		PULL BOX
		SERVICE POLE
M		METER PEDESTAL
C		CONTROLLER CABINET
		CONDUIT RUN (SIGNALS)
		CONDUIT RUN (INTERCONNECT)
	(FUTURE NEW) (FUTURE EXIST)	CONDUIT RUN (NEW LIGHTING) CONDUIT RUN (EXIST LIGHTING)
		LOOP DETECTOR
		TRAFFIC SIGNAL PEDESTAL POLE
1		CONDUIT RUN NUMBER (SIGNAL)
S1		CONDUIT RUN NUMBER (POWER SERVICE)
C1		CONDUIT RUN NUMBER (INTERCONNECT)
		POLE WITH MASTARM, TRAFFIC SIGNAL AND BACKPLATE
		PEDESTRIAN PUSH BUTTON (MOUNTED TO SIDE OF POLE WHERE INDICATED)
		PEDESTRIAN SIGNALS (MOUNTED TO SIDE OF POLE WHERE INDICATED)
SC		SPLICE CABINET
		TRAFFIC MANHOLE
		VIDEO CAMERA

AS-BUILT INFORMATION
CONTRACTOR Jaynes Corp. DATE 10/97
WORK STAKED BY BH DATE 10/97
INSPECTOR'S ACCEPTANCE BY BH DATE 10/97
FIELD VERIFICATION BY BH DATE 10/97
DRAWINGS CORRECTED BY BH DATE 10/97
MICRO-FILM INFORMATION
RECORDED BY DATE
NO.

BENCH MARKS

SURVEY INFORMATION
FIELD NOTES

NO.	BY	DATE

ENGINEER'S SEAL

NO.	DATE	REMARKS	BY
		REVISIONS	
		DESIGN	

DESIGNED BY BHI DATE 3-97
DRAWN BY BHI DATE 3-97
CHECKED BY BHI DATE 3-97

RECORD DRAWING
DATE: 11-19-97

BOHANNAN-HUSTON INC.
ENGINEERS • PLANNERS • PHOTOGRAMMETRISTS • SURVEYORS • LANDSCAPE • ARCHITECTS
ALBUQUERQUE LAS CRUCES SANTA FE

CITY OF ALBUQUERQUE
PUBLIC WORKS DEPARTMENT
ENGINEERING DEVELOPMENT GROUP

TRAFFIC SIGNAL
NOTES AND LEGEND

DESIGN REVIEW COMMITTEE	CITY ENGINEER APPROVAL	LAST DESIGN UPDATE	MO./DAY/YR.	MO./DAY/YR.

CITY PROJECT NO.	ZONE MAP NO.	SHEET	OF
562181	E-22	19	36

SCANNED BY BY LASON

ASSGNTS.DWG

TRAFFIC SIGNAL ESTIMATED QUANTITIES

ITEM NO	ITEM DESCRIPTION	UNIT	LOCATION		TOTAL
			ACADEMY/ TENNYSON	INTERCONNECT	
0421.15	SERVICE CONNECTION (SIGNAL)	EACH	1	–	1
0421.11	METER PEDESTAL (SIGNAL)	EACH	1	–	1
0422.03	TRAFFIC SIGNAL PEDESTAL POLE, 13 FOOT	EACH	2	–	2
0422.15	TRAFFIC SIGNAL MASTARM, 30 FOOT ARM, TYPE III, TROMBONE	EACH	1	–	1
0422.19	TRAFFIC SIGNAL MASTARM, 35 FOOT ARM, TYPE III, TROMBONE	EACH	3	–	3
0423.02	TRAFFIC SIGNAL MASTARM FOUNDATION	EACH	4	–	4
0423.03	TRAFFIC CONTROLLER FOUNDATION (TYPE P CABINET)	EACH	1	–	1
0423.10	TRAFFIC SIGNAL FOUNDATION FOR PEDESTAL POLE	EACH	2	–	2
0424.06	RIGID ELECTRICAL CONDUIT, 2" INCLUDING TRENCH, BACKFILL, PATCHING, PUSHING, BORING & JACKING	LIN FT	760	10	770
0424.11	RIGID ELECTRICAL CONDUIT, 3" INCLUDING TRENCH, BACKFILL, PATCHING, PUSHING, BORING & JACKING	LIN FT	820	1065	1885
0425.02	ELECTRICAL PULL BOX, (STANDARD)	EACH	6	6	12
0425.03	ELECTRICAL PULL BOX, (LARGE)	EACH	13	–	13
0425.12	SPLICE CABINET, GROUND MOUNT (LARGE)	EACH	–	1	1
0425.20	TRAFFIC SIGNAL MANHOLE	EACH	–	2	2
0426.02	SINGLE CONDUCTOR, 4	LIN FT	1020	–	1020
0426.04	SINGLE CONDUCTOR, 8	LIN FT	725	–	725
0426.10	MULTI-CONDUCTOR CABLE 5	LIN FT	2150	–	2150
0426.11	MULTI-CONDUCTOR CABLE 7	LIN FT	195	–	195
0426.14	MULTI-CONDUCTOR CABLE 20	LIN FT	1450	–	1450
0426.20	COMMUNICATION CABLE 6 PAIR	LIN FT	–	20	20
0426.21	COMMUNICATION CABLE 12 PAIR	LIN FT	–	1385	1385
0427.02	3 SECTION TRAFFIC SIGNAL ASSEMBLY	EACH	12	–	12
0427.04	5 SECTION TRAFFIC SIGNAL ASSEMBLY	EACH	5	–	5
0427.21	PEDESTRIAN SIGNAL (NEON)	EACH	8	–	8
0427.31	3 SECTION BACKPLATE	EACH	7	–	7
0428.10	PEDESTRIAN PUSH BUTTON STATION	EACH	8	–	8
0428.71	PHASE SELECTOR MODULE, 2 CHANNEL	EACH	2	–	1
0428.75	OPTICAL DETECTOR 1D/1C	EACH	4	–	2
0428.78	OPTICAL DETECTOR CABLE	LIN FT	1025	–	500
0428.90	MACHINE VISION VEHICLE DETECTION YSTEM	EACH	1	–	1
0428.92	VIDEO COAXIAL CABLE	LIN FT	1035	–	1035
0428.93	VIDEO POWER CABLE	EACH	1035	–	1035
0428.94	VIDEO CAMERA	EACH	4	–	4
0429.01	TRAFFIC ACTUATED CONTROLLER	EACH	1	–	1
0450.01	ALUMINUM PANEL SIGN	EACH	4	–	4

RECORD DRAWING
DATE: 11-19-97

AS-BUILT INFORMATION
CONTRACTOR Jaynes Corp DATE 10/97
WORK STAKED BY BH DATE 10/97
INSPECTOR'S ACCEPTANCE BY BH DATE 10/97
FIELD VERIFICATION BY BH DATE 10/97
DRAWINGS CORRECTED BY BH DATE 10/97
MICRO-FILM INFORMATION
RECORDED BY DATE
NO.

BENCH MARKS

SURVEY INFORMATION
FIELD NOTES
NO. BY DATE

ENGINEER'S SEAL

NO.	DATE	REMARKS	BY
		REVISIONS	
		DESIGN	
		DESIGNED BY BHI	DATE 4-97
		DRAWN BY BHI	DATE 4-97
		CHECKED BY BHI	DATE 4-97

BOHANNAN-HUSTON INC.
ENGINEERS • PLANNERS • PHOTOGRAMMETRISTS • SURVEYORS • LANDSCAPE • ARCHITECTS
ALBUQUERQUE LAS CRUCES SANTA FE

CITY OF ALBUQUERQUE
PUBLIC WORKS DEPARTMENT
ENGINEERING DEVELOPMENT GROUP

TRAFFIC SIGNAL
ESTIMATED QUANTITIES

DESIGN REVIEW COMMITTEE	CITY ENGINEER APPROVAL	LAST DESIGN UPDATE	MO./DAY/YR.	MO./DAY/YR.

CITY PROJECT NO.	ZONE MAP NO.	SHEET	OF
562181	E-22	20	36

ABSGQUAN.DWG

SCANNED BY

TRAFFIC SIGNAL CONFIGURATION BY APPROACH

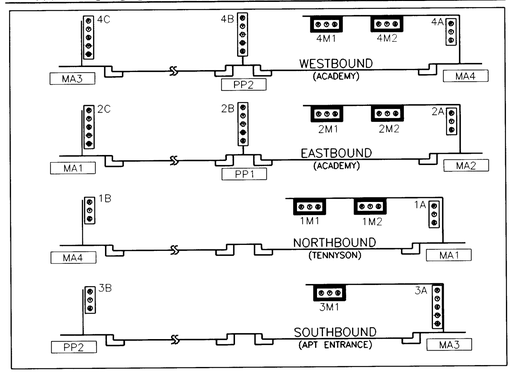

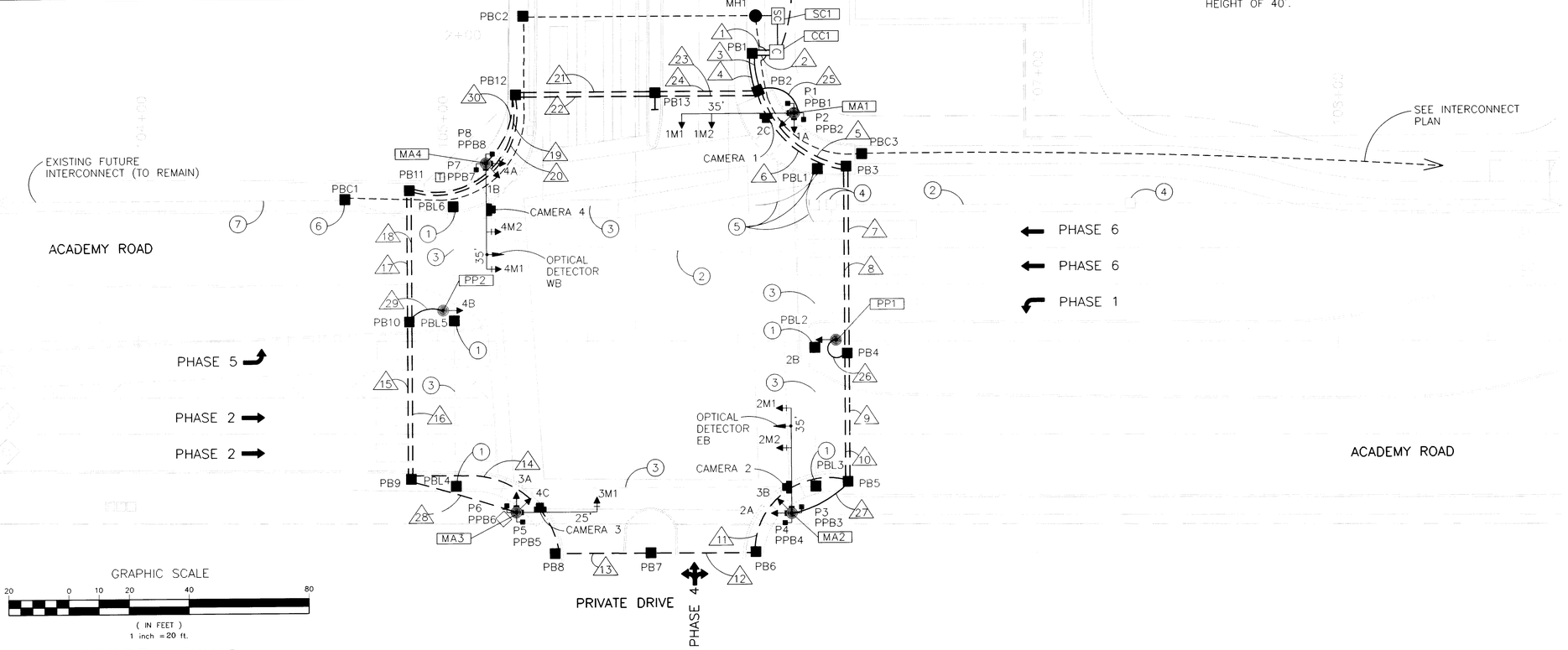

FLASH CONDITION *

RED BALL → HEADS, 1A,1B,1M1,1M2 3A,3B,3M

RED BALL → HEADS, 2A,2B,2C,2M1,2M2 4A,4B,4C,4M1,4M2

INITIALIZATION

ALL RED, THEN PHASE 2 AND 6 GREEN

NOTES

1. SIGNAL PULL BOXES PB1 THRU PB13 ARE LARGE SIZE.
2. LIGHTING PULL BOXES PBL1 THRU PBL6 ARE STANDARD SIZE.
3. INTERCONNECT PULL BOXES PBC1 THRU PBC6 ARE STANDARD SIZE.
4. LOOP DETECTORS SHOWN ARE THEORETICAL AND SHALL BE PROGRAMMED BY THE MANUFACTURER OF THE MACHINE VISION VEHICLE DETECTION SYSTEM.
5. MASTARMS 1 THRU 4 SHALL HAVE A CAMERA MOUNTING HEIGHT OF 40'.

SIGNAL PHASING

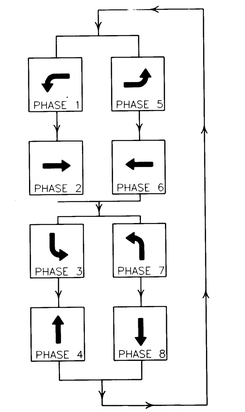

TYPICAL SIGNAL FACE LENS ARRANGEMENTS

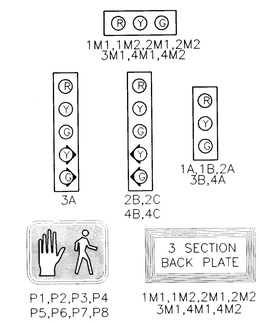

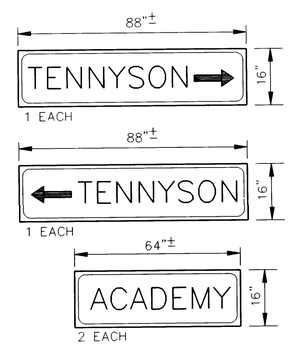

ALUMINUM PANEL SIGNS

GRAPHIC SCALE

20 0 10 20 40 80

(IN FEET)
1 inch = 20 ft.

ABBREVIATIONS

MAI	MASTARM NUMBER
PP1	PEDESTAL POLE NUMBER
PPB1	PEDESTRIAN PUSH BUTTON NUMBER
CC1	CONTROL CABINET NUMBER
PB1	PULL BOX NUMBER (SIGNALS)
PBC1	PULL BOX NUMBER (INTERCONNECT)
PBS1	PULL BOX NUMBER (SERVICE)
PBL1	PULL BOX NUMBER (LIGHTING)
3A	SIGNAL HEAD NUMBER
P1	PEDESTRIAN SIGNAL NUMBER
EC	EXTENDED CALL LOOP DETECTOR
MH1	TRAFFIC MANHOLE NUMBER (INTERCONNECT)

SYMBOL KEY

MA1	SIGNAL & CABINET ID
99	CONDUIT RUN ID (SIGNALS)
S1	CONDUIT RUN ID (POWER SERVICE)
C1	CONDUIT RUN ID (INTERCONNECT)

N

OPTICAL DETECTOR CABLE

FROM	TO	CONDUIT TRACE	NO PAIR x LENGTH	TOTAL LENGTH
MA2	CONTROLLER	MA2-27-10-8-6-4-2	1 @ 280	280
MA4	CONTROLLER	MA4-30-22-24-4-2	1 @ 220	220
			TOTAL	500

VIDEO CABLES *

FROM	TO	CONDUIT TRACE	NO PAIR x LENGTH	TOTAL LENGTH
MA1	CONTROLLER	MAI-25-4-2	1 @ 110	110
MA2	CONTROLLER	MA2-27-10-8-6-4-2	1 @ 280	280
MA3	CONTROLLER	MA3-28-16-18-20-22-24-4-2	1 @ 425	425
MA4	CONTROLLER	MA4-30-22-24-4-2	1 @ 220	220
			TOTAL	1035

* POWER AND COAXIAL

KEYED NOTES

1. REMOVE EXISTING ELECTRICAL PULL BOX. INSTALL NEW ELECTRICAL PULL BOX (STANDARD SIZE).
2. REMOVE (OR ABANDON) EXISTING ELECTRICAL CONDUIT.
3. EXISTING ELECTRICAL CONDUIT TO REMAIN (FUTURE LIGHTING).
4. REMOVE EXISTING ELECTRICAL PULL BOX.
5. INSTALL NEW ELETRICAL PULL BOX (STANDARD SIZE) IN NEW SIDEWALK. CONNECT EXISTING CONDUITS TO NEW PULL BOX.
6. INTERCEPT EXISTING INTERCONNECT CONDUIT. INSTALL NEW ELECTRICAL PULL BOX (STANDARD SIZE).
7. EXISITNG ELECTRICAL CONDUIT TO REMAIN (FUTURE INTERCONNECT).

WILLIAM J. SHEA III
813
4/16/98
REGISTERED PROFESSIONAL ENGINEER

RECORD DRAWING
DATE: 11-19-97

AS-BUILT INFORMATION
CONTRACTOR Jaynes Corp. DATE 10/97
WORK STAKED BY BH DATE 10/97
INSPECTOR'S ACCEPTANCE BY BH DATE 10/97
FIELD VERIFICATION BY BH DATE 10/97
DRAWINGS CORRECTED BY BH DATE 10/97
MICRO-FILM INFORMATION
RECORDED BY DATE
NO

BENCH MARKS

SURVEY INFORMATION
FIELD NOTES
NO. BY DATE

ENGINEER'S SEAL
5-14-97

NO.	DATE	REMARKS	BY
		REVISIONS	
		DESIGN	
		DESIGNED BY BHI	DATE 4-97
		DRAWN BY BHI	DATE 4-97
		CHECKED BY BHI	DATE 4-97

BOHANNAN-HUSTON INC.
ENGINEERS • PLANNERS • PHOTOGRAMMETRISTS • SURVEYORS • LANDSCAPE • ARCHITECTS
ALBUQUERQUE LAS CRUCES SANTA FE

CITY OF ALBUQUERQUE
PUBLIC WORKS DEPARTMENT
ENGINEERING DEVELOPMENT GROUP

TRAFFIC SIGNAL PLAN
ACADEMY/TENNYSON

DESIGN REVIEW COMMITTEE	CITY ENGINEER APPROVAL	LAST DESIGN UPDATE	MO./DAY/YR.	MO./DAY/YR.

CITY PROJECT NO.	ZONE MAP NO.	SHEET	OF
562181	E-22	21	36

SCANNED BY BY LASON

TRAN2 [T:\95\3A\2\11\SHEETS\SIGNAL\SGPL_J0.DWG]
SGPL_J0.DWG

CONDUIT AND CONDUCTOR REQUIREMENTS

CONDUIT LENGTH, SIZE, AND TYPE						CONDUIT FILL BY CONTRACTOR LENGTH AND TYPE									
RUN ID	SIZE/LENGTH 1"	2"	3"	TYPE	REMARKS	MCC 5 (# @ FT)	MCC 7 (# @ FT)	MCC 20 (# @ FT)	SCC #4 (# @ FT)	SCC #8 (# @ FT)	CC #6 (# @ FT)	CC #12 (# @ FT)	OPTICOM (# @ FT)	VIDEO POWER (# @ FT)	VIDEO COAXIAL (# @ FT)
S1		300		REC	POWER TO METER				3 @ 305						
S2		30		REC	METER TO CC1				3 @ 35						
1			10	REC	CC1 TO PB1	1 @ 15		2 @ 15		1 @ 15					
2			10	REC	CC1 TO PB1								2 @ 15	4 @ 15	4 @ 15
3			15	REC	PB1 TO PB2	1 @ 20		2 @ 20		1 @ 20					
4			15	REC	PB1 TO PB2								2 @ 20	4 @ 20	4 @ 20
5			45	REC	PB2 TO PB3	1 @ 50		2 @ 50		1 @ 50					
6		45		REC	PB2 TO PB3									1 @ 50	1 @ 50
7			70	REC	PB3 TO PB4	1 @ 75		2 @ 75		1 @ 75					
8		70		REC	PB3 TO PB4									1 @ 75	1 @ 75
9			50	REC	PB4 TO PB5	1 @ 55		2 @ 55		1 @ 55					
10		50		REC	PB4 TO PB5									1 @ 55	1 @ 55
11			55	REC	PB5 TO PB6	1 @ 60		2 @ 60		1 @ 60					
12			40	REC	PB6 TO PB7	1 @ 45		2 @ 45		1 @ 45					
13			35	REC	PB7 TO PB8	1 @ 40		2 @ 40		1 @ 40					
14			70	REC	PB8 TO PB9	1 @ 75		2 @ 75		1 @ 75					
15			55	REC	PB9 TO PB10	1 @ 60		2 @ 60		1 @ 60					
16		55		REC	PB9 TO PB10									1 @ 60	1 @ 60
17			50	REC	PB10 TO PB11	1 @ 55		2 @ 55		1 @ 55					
18		50		REC	PB10 TO PB11									1 @ 55	1 @ 55
19			70	REC	PB11 TO PB12	1 @ 75		2 @ 75		1 @ 75					
20		70		REC	PB11 TO PB12									1 @ 75	1 @ 75
21			50	REC	PB12 TO PB13	1 @ 55		2 @ 55		1 @ 55					
22		50		REC	PB12 TO PB13								1 @ 55	2 @ 55	2 @ 551
23			40	REC	PB13 TO PB2	1 @ 45		2 @ 45		1 @ 45					
24		40		REC	PB13 TO PB2								1 @ 45	2 @ 45	2 @ 45
25			20	REC	MA1 TO PB2	7 @ 25	1 @ 25							1 @ 25	1 @ 25
26			15	REC	PP1 TO PB 4		1 @ 20								
27			10	REC	MA2 TO PB5	7 @ 15							1 @ 15	1 @ 15	1 @ 15
28			45	REC	MA3 TO PB9	6 @ 50	1 @ 50							1 @ 50	1 @ 50
29			20		PPB2 TO PB10		1 @ 25								
30			30		MA4 TO PB12	8 @ 35							1 @ 35	1 @ 35	1 @ 35
SUBTOTAL	0	760	820			1585	120	1450	1020	725	0	0	400	835	835

ABBREVIATIONS

CC 6	COMMUNICATION CABLE-6 PAIR
CC 12	COMMUNICATION CABLE-12 PAIR
DL	DETECTOR LOOP
MA	MASTARM
MCC	MULTI CONDUCTOR CABLE
PB	PULL BOX
PP	PEDESTAL POLE
PPB	PEDESTRIAN PUSH BUTTON
REC	RIGID ELECTRIC CONDUIT
SCC	SINGLE CONDUCTOR CABLE
CAM	VIDEO CAMERA

AS-BUILT INFORMATION
CONTRACTOR Taynes Corp DATE 10/97
WORK STAKED BY BH DATE 10/97
FIELD INSPECTION/ACCEPTANCE BY BH DATE 10/97
FIELD VERIFICATION BY BH DATE 10/97
DRAWINGS CORRECTED BY BH DATE 10/97
MICRO-FILM INFORMATION
RECORDED BY DATE
NO.

BENCH MARKS

SURVEY INFORMATION
FIELD NOTES
NO. BY DATE

ENGINEER'S SEAL
4-28-97

NO.	DATE	REMARKS	BY
		REVISIONS	
		DESIGN	
	DATE 4-97	DESIGNED BY BHI	
	DATE 4-97	DRAWN BY BHI	
	DATE 4-97	CHECKED BY BHI	

BOHANNAN-HUSTON INC.
ENGINEERS • PLANNERS • PHOTOGRAMMETRISTS • SURVEYORS • LANDSCAPE • ARCHITECTS
ALBUQUERQUE LAS CRUCES SANTA FE

CITY OF ALBUQUERQUE
PUBLIC WORKS DEPARTMENT
ENGINEERING DEVELOPMENT GROUP

TRAFFIC SIGNAL
CONDUITS & CABLE-ACADEMY/TENNYSON

DESIGN REVIEW COMMITTEE: APPROVED REVIEW
CITY ENGINEER APPROVAL
LAST DESIGN UPDATE MO./DAY/YR. MO./DAY/YR.

CITY PROJECT NO. 562181 | ZONE MAP NO. E-22 | SHEET 22 OF 36

4/16/97

RECORD DRAWING
DATE: 11-19-97

T:\DAN2\T96328\K21\SHEETS\SIGNAL\ABCNCB.DWG
ABCNCBE...K

SCANNED BY

CONDUIT AND CONDUCTOR REQUIREMENTS

CONDUIT LENGTH, SIZE, AND TYPE						CONDUIT FILL BY CONTRACTOR LENGTH AND TYPE									
RUN ID	SIZE/LENGTH 1"	2"	3"	TYPE	REMARKS	MCC 5 (# @ FT)	MCC 7 (# @ FT)	MCC 20 (# @ FT)	SCC #4 (# @ FT)	SCC #8 (# @ FT)	CC #6 (# @ FT)	CC #12 (# @ FT)	OPTICOM (# @ FT)	VIDEO POWER (# @ FT)	VIDEO COAXIAL (# @ FT)
MA1					BASE TO 1M1	1 @ 55									
MA1					BASE TO 1M2	1 @ 45									
MA1					BASE TO 1A	1 @ 15									
MA1					BASE TO 2C		1 @ 15								
MA1					BASE TO P1 & P2	2 @ 15									
MA1					BASE TO PPB1 & PPB2	2 @ 5									
MA1					BASE TO OPTICOM								1 @ 50		
MA1					BASE TO CAM1									1 @ 50	1 @ 50
MA2					BASE TO 2M1	1 @ 55									
MA2					BASE TO 2M2	1 @ 45									
MA2					BASE TO 2A	1 @ 15									
MA2					BASE TO 3B	1 @ 15									
MA2					BASE TO P3 & P4	2 @ 15									
MA2					BASE TO PPB3 & PPB4	2 @ 5									
MA2					BASE TO CAM2									1 @ 50	1 @ 50
MA3					BASE TO 3M1	1 @ 45									
MA3					BASE TO 3A		1 @ 15								
MA3					BASE TO 4C		1 @ 15								
MA3					BASE TO P5 & P6	2 @ 15									
MA3					BASE TO PPB5 & PPB6	2 @ 5									
MA3					BASE TO CAM3									1 @ 50	1 @ 50
MA4					BASE TO 4M1	1 @ 55									
MA4					BASE TO 4M2	1 @ 45									
MA4					BASE TO 4A	1 @ 15									
MA4					BASE TO 1B		1 @ 15								
MA4					BASE TO P7 & P8	2 @ 15									
MA4					BASE TO PPB7 & PPB8	2 @ 5									
MA4					BASE TO OPTICOM								1 @ 50		
MA4					BASE TO CAM4									1 @ 50	1 @ 50
PP1					BASE TO 2B		1 @ 15								
PP3					BASE TO 4B		1 @ 15								
SUBTOTAL	0	0	0			565	75	0	0	0	0	0	100	200	200
TOTALS	0	760	820			2150	195	1450	1020	725	0	0	500	1035	1035

ABBREVIATIONS

CC 6	COMMUNICATION CABLE–6 PAIR
CC 12	COMMUNICATION CABLE–12 PAIR
DL	DETECTOR LOOP
MA	MASTARM
MCC	MULTI CONDUCTOR CABLE
PB	PULL BOX
PP	PEDESTAL POLE
PPB	PEDESTRIAN PUSH BUTTON
REC	RIGID ELECTRIC CONDUIT
SCC	SINGLE CONDUCTOR CABLE
CAM	VIDEO CAMERA

AS–BUILT INFORMATION
CONTRACTOR Jaynes Corp DATE 10/97
WORK STAKED BY BH DATE 10/97
INSPECTOR'S ACCEPTANCE BY BH DATE 10/97
FIELD VERIFICATION BY BH DATE 10/97
DRAWINGS CORRECTED BY BH DATE 10/97
MICRO–FILM INFORMATION
RECORDED BY: DATE
NO.

BENCH MARKS

SURVEY INFORMATION
FIELD NOTES
NO. BY DATE

ENGINEER'S SEAL
5-14-97

NO.	DATE	REMARKS	BY
		REVISIONS	

DESIGN
DESIGNED BY BHI DATE 4–97
DRAWN BY BHI DATE 4–97
CHECKED BY BHI DATE 4–97

BOHANNAN-HUSTON INC.
ENGINEERS • PLANNERS • PHOTOGRAMMETRISTS • SURVEYORS • LANDSCAPE • ARCHITECTS
ALBUQUERQUE LAS CRUCES SANTA FE

CITY OF ALBUQUERQUE
PUBLIC WORKS DEPARTMENT
ENGINEERING DEVELOPMENT GROUP

TRAFFIC SIGNAL
CONDUITS & CABLE–ACADEMY/TENNYSON

DESIGN REVIEW COMMITTEE | CITY ENGINEER APPROVAL | LAST DESIGN UPDATE | MO./DAY/YR. | MO./DAY/YR.

CITY PROJECT NO. 562181 | ZONE MAP NO. E–22 | SHEET 23 OF 36

RECORD DRAWING
DATE: 11-19-97

SCANNED BY LASER

TRANZ(T)\62382211 SHEETS SIGNAL\ABCNCB2.DWG

ABCNCB2.DWG

DETECTOR LOOPS

LOOP ID	VEHICLE DETECTOR MODE	VEHICLE DETECTOR CALL	VEHICLE DETECTOR UNIT NO	VEHICLE DETECTOR CHANNEL	LOOP TYPE	LOOP DIMENSIONS L	LOOP DIMENSIONS W	LOOP DIMENSIONS S	LOOP DIMENSIONS T	LOOP WIRE	PAVEMENT SAWCUT
TOTALS										LF	LF

THIS INTERSECTION
VIDEO DETECTION

DETECTOR RACK ASSIGNMENTS

UNIT NUMBER →	POWER SUPPLY	1	2	3	4	5	6	7	8	9	10	11	12	13	14	15	16	17	18
CHANNEL 1 →		ø1	ø2	ø6	ø2 EC	ø3	ø4	ø8	ø4 EC	DUAL LEFT ø1	DUAL LEFT ø3	SD 1	SD 3	SD 5	SD 7	SD 9	PED ISOLATION	OPTICOM 1	OPTICOM 3
CHANNEL 2 →		ø5	ø2	ø6	ø6 EC	ø7	ø4	ø8	ø8 EC	DUAL LEFT ø5	DUAL LEFT ø7	SD 2	SD 4	SD 6	SD 8	SD 10		OPTICOM 2	OPTICOM 4
DETECTOR MODULE REQUIRED →	*																*	✓	✓

* INCIDENTAL TO CONSTRUCTION

FUNCTION CHART – 115 VOLT CIRCUIT 1/

CONDUCTOR NUMBER	BASE COLOR	TRACER	RING 1 – MULTI CONDUCTOR CABLE 20 FUNCTION	RING 1 FIELD CONNECTION	RING 2 – MULTI CONDUCTOR CABLE 20 2/ FUNCTION	RING 2 FIELD CONNECTION
1	BLACK	–	SPARE	SPARE	SPARE	SPARE
2	WHITE	–	SPARE	SPARE	SPARE	SPARE
3	RED	–	PHASE 1 RED	SPARE	PHASE 5 RED	SPARE
4	GREEN	–	PHASE 1 GREEN	GREEN LEFT TURN ARROW 4B, 4C	PHASE 5 GREEN	GREEN LEFT TURN ARROW 2B, 2C
5	ORANGE	–	PHASE 1 YELLOW	YELLOW LEFT TURN ARROW 4B, 4C	PHASE 5 YELLOW	YELLOW LEFT TURN ARROW 2B, 2C
6	BLUE	–	SPARE	SPARE	SPARE	SPARE
7	WHITE	BLACK	SPARE	SPARE	SPARE	SPARE
8	RED	BLACK	PHASE 2 RED	RED BALL 2A, 2B, 2C, 2M1, 2M2	PHASE 6 RED	RED BALL 4A, 4B, 4C, 4M1, 4M2
9	GREEN	BLACK	PHASE 2 GREEN	GREEN BALL 2A, 2B, 2C, 2M1, 2M2	PHASE 6 GREEN	GREEN BALL 4A, 4B, 4C, 4M1, 4M2
10	ORANGE	BLACK	PHASE 2 YELLOW	YELLOW BALL 2A, 2B, 2C, 2M1, 2M2	PHASE 6 YELLOW	YELLOW BALL 4A, 4B, 4C, 4M1, 4M2
11	BLUE	BLACK	PHASE 2 WALK	PEDESTRIAN WALK P4, P5	PHASE 6 WALK	PEDESTRIAN WALK P1, P8
12	BLACK	WHITE	PHASE 2 DON'T WALK	PEDESTRIAN DON'T WALK P4, P5	PHASE 6 DON'T WALK	PEDESTRIAN DON'T WALK P1, P8
13	RED	WHITE	PHASE 3 RED	SPARE	PHASE 7 RED	SPARE
14	GREEN	WHITE	PHASE 3 GREEN	SPARE	PHASE 7 GREEN	SPARE
15	BLUE	WHITE	PHASE 3 YELLOW	SPARE	PHASE 7 YELLOW	SPARE
16	BLACK	RED	PHASE 4 RED	RED BALL 1A, 1B, 1M1, 1M2	PHASE 8 RED	RED BALL 3A, 3B, 3M1
17	WHITE	RED	PHASE 4 GREEN	GREEN BALL 1A, 1B, 1M1, 1M2	PHASE 8 GREEN	GREEN BALL 3A, 3B, 3M1
18	ORANGE	RED	PHASE 4 YELLOW	YELLOW BALL 1A, 1B, 1M1, 1M2	PHASE 8 YELLOW	YELLOW BALL 3A, 3B, 3M1
19	BLUE	RED	PHASE 4 WALK	PEDESTRIAN WALK P2, P3	PHASE 8 WALK	PEDESTRIAN WALK P6, P7
20	RED	GREEN	PHASE 4 DON'T WALK	PEDESTRIAN DON'T WALK P2, P3	PHASE 8 DON'T WALK	PEDESTRIAN DON'T WALK P6, P7

FUNCTION CHART – 24 VOLT CIRCUIT 3/

MULTI CONDUCTOR CABLE 5

CONDUCTOR NUMBER	BASE COLOR	FUNCTION	FIELD CONNECTION
1	BLACK	PHASE 2 PPB	PPB3 & PPB6
2	WHITE	COMMON	PPB1 THRU PPB8
3	RED	PHASE 4 PPB	PPB1 & PPB4
4	GREEN	PHASE 6 PPB	PPB2 & PPB7
5	ORANGE	PHASE 8 PPB	PPB5 & PPB8

NOTES:

1/ IDENTIFY CONDUCTORS LISTED AS "115 VOLTS"

2/ WRAP RING 2 CABLE AT EACH SPLICE POINT WITH COLORED ELECTRICAL TAPE. THE IDENTIFICATION MARKING SHALL BE PROVIDED ON EACH RING 2 CABLE AT EACH SPLICE BOX AND LOCATED 6" BACK FROM THE END.

3/ IDENTIFY CONDUCTORS LISTED AS "PPB – LOW VOLTAGE" AT EACH SPLICE POINT. FIVE (5) CONDUCTOR CABLE SHALL BE 24 VOLTS AND USED FOR PUSH BUTTONS ONLY.

William P. Hinkle 6 8 4/16/98 STATE OF NEW MEXICO PROFESSIONAL ENGINEER

SCANNED BY BY LASON

RECORD DRAWING
DATE: 11-19-97

AS-BUILT INFORMATION
CONTRACTOR Jaynes Corp. DATE 10/97
WORK STAKED BY BH DATE 10/97
WORK INSPECTED FOR ACCEPTANCE BY BH DATE 10/97
FIELD VERIFICATION BY BH DATE 10/97
DRAWINGS CORRECTED BY BH DATE 10/97
MICRO-FILM INFORMATION
RECORDED BY DATE
NO.

BENCH MARKS

SURVEY INFORMATION
FIELD NOTES
NO. BY DATE

ENGINEER'S SEAL
Jim W. Shade 4-28-97

NO.	DATE	REMARKS	BY
		REVISIONS	
		DESIGN	
		DESIGNED BY BHI	DATE 3-97
		DRAWN BY BHI	DATE 3-97
		CHECKED BY BHI	DATE 3-97

BOHANNAN-HUSTON INC.
ENGINEERS • PLANNERS • PHOTOGRAMMETRISTS • SURVEYORS • LANDSCAPE • ARCHITECTS
ALBUQUERQUE LAS CRUCES SANTA FE

CITY OF ALBUQUERQUE
PUBLIC WORKS DEPARTMENT
ENGINEERING DEVELOPMENT GROUP

TRAFFIC SIGNAL
FUNCTIONS & DETECTORS/ACADEMY–TENNYSON

CITY REVIEW COMMITTEE | CITY ENGINEER APPROVAL | LAST DESIGN UPDATE | MO./DAY/YR. | MO./DAY/YR.

CITY PROJECT NO. 562181 | ZONE MAP NO. E-22 | SHEET 24 OF 70

TRAN2:[T96238A22.11.SHEETS.SIGNAL]ABFNDTBL.DWG

BFNDTBL.DWG

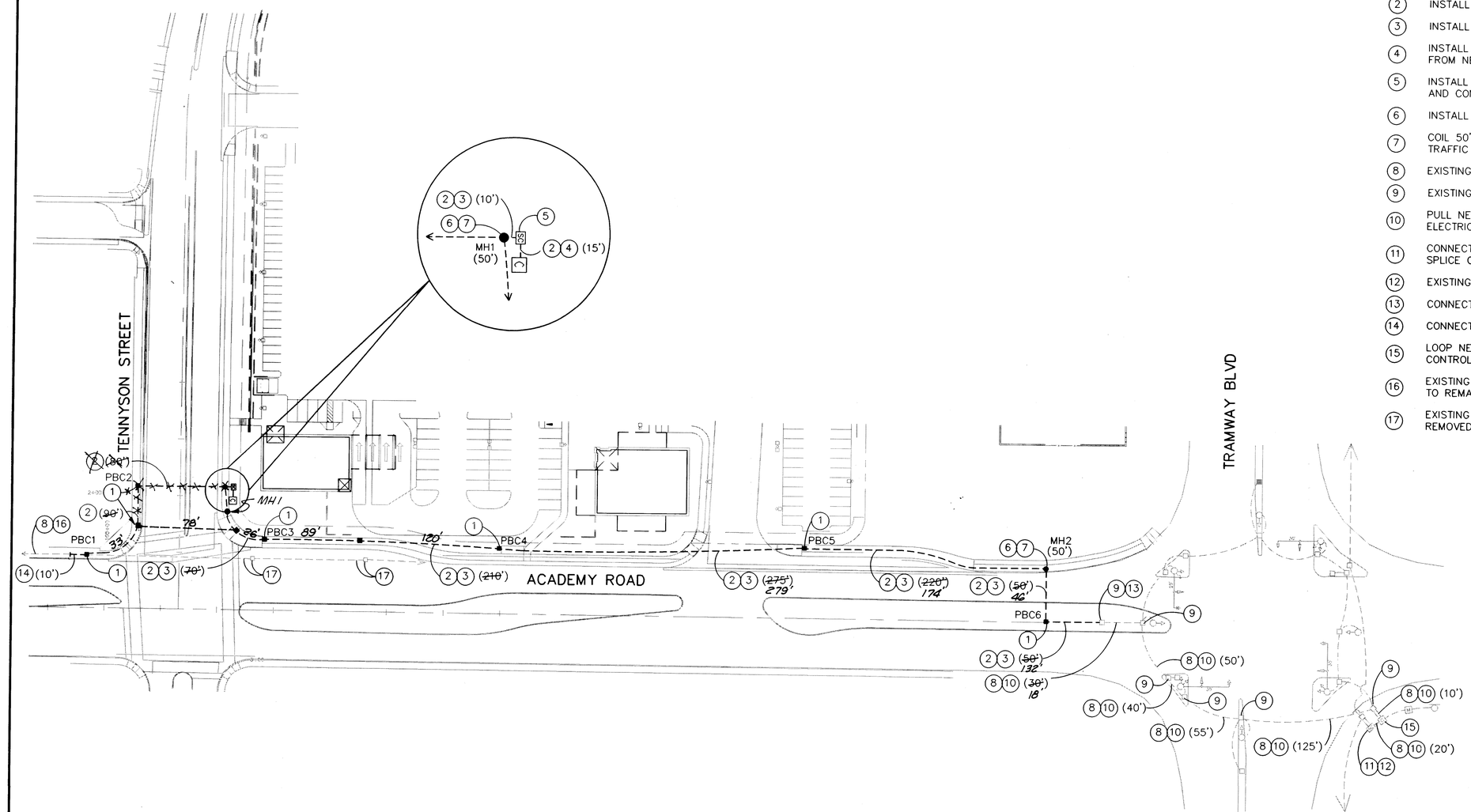

KEYED NOTES

1. INSTALL NEW ELECTRICAL PULL BOX, STANDARD SIZE
2. INSTALL NEW RIGID ELECTRICAL CONDUIT 3"
3. INSTALL NEW COMMUNICATION CABLE 12 PAIR
4. INSTALL AND CONNECT NEW COMMUNICATION CABLE, 6 PAIR, FROM NEW SPLICE CABINET TO NEW CONTROLLER
5. INSTALL NEW SPLICE CABINET, GROUND MOUNT, LARGE AND CONNECT NEW COMMUNICATION CABLES
6. INSTALL NEW TRAFFIC MANHOLE
7. COIL 50' OF COMMUNICATION CABLE 12 PAIR IN NEW TRAFFIC MANHOLE
8. EXISTING RIGID ELECTRICAL CONDUIT TO REMAIN
9. EXISTING ELECTRICAL PULL BOX TO REMAIN
10. PULL NEW COMMUNICATION CABLE 12 PAIR IN EXISTING ELECTRICAL CONDUIT
11. CONNECT NEW COMMUNICATION CABLE 12 PAIR TO EXISTING SPLICE CABINET
12. EXISTING SPLICE CABINET TO REMAIN
13. CONNECT NEW CONDUIT TO EXISTING PULL BOX
14. CONNECT TO EXISTING INTERCONNECT CONDUIT
15. LOOP NEW COMMUNICATION CABLE IN AND OUT OF EXISTING CONTROLLER CABINET (NO SPLICE)
16. EXISTING INTERCONNECT CONDUIT (EMPTY) TO THE WEST TO REMAIN (FUTURE)
17. EXISTING INTERCONNECT CONDUIT AND PULL BOXES TO BE REMOVED OR ABANDONED

AS-BUILT INFORMATION
CONTRACTOR, Taylors Corp DATE 10/97
WORK STAKED BY BH DATE 10/97
INSPECTOR'S ACCEPTANCE BY BH DATE 10/97
FIELD VERIFICATION BY BH DATE 10/97
DRAWINGS CORRECTED BY BH DATE 10/97
MICRO-FILM INFORMATION
RECORDED BY DATE
NO.

BENCH MARKS

SURVEY INFORMATION
FIELD NOTES
NO. BY DATE

ENGINEER'S SEAL

NO.	DATE	REMARKS	BY
		REVISIONS	
		DESIGN	

DESIGNED BY BHI DATE 3-97
DRAWN BY BHI DATE 3-97
CHECKED BY BHI DATE 3-97

BOHANNAN-HUSTON INC.
ENGINEERS • PLANNERS • PHOTOGRAMMETRISTS • SURVEYORS • LANDSCAPE • ARCHITECTS
ALBUQUERQUE LAS CRUCES SANTA FE

CITY OF ALBUQUERQUE
PUBLIC WORKS DEPARTMENT
ENGINEERING DEVELOPMENT GROUP

INTERCONNECT PLAN
ACADEMY ROAD/TENNYSON STREET

DESIGN REVIEW COMMITTEE | CITY ENGINEER APPROVAL | LAST DESIGN UPDATE | MO./DAY/YR. | MO./DAY/YR.

CITY PROJECT NO. 562181 | ZONE MAP NO. E-22 | SHEET 25 OF 36

RECORD DRAWING
DATE: 11-19-97

SCANNED BY LASON

97348A 01 3200

TRAN2:[T96238A2211.SHEETS.SIGNAL]INTER_JO.DWG
INTER_JO.DWG

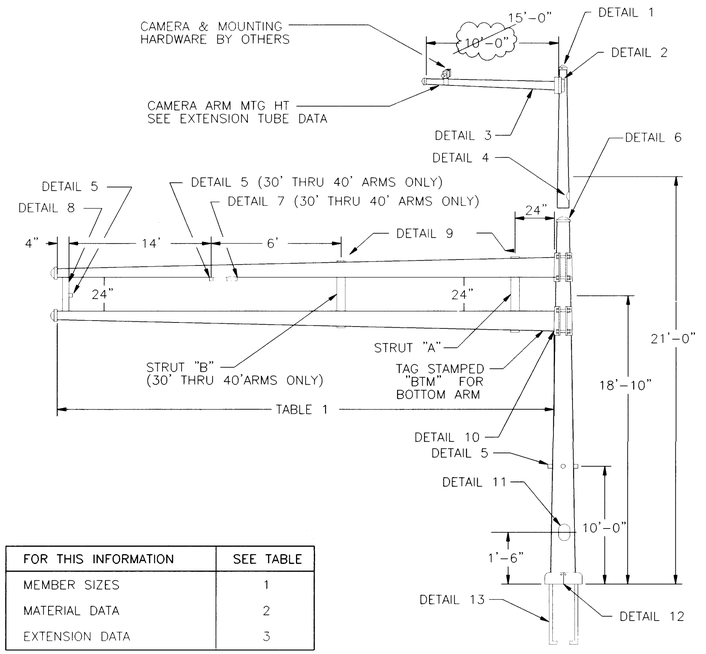

FOR THIS INFORMATION	SEE TABLE
MEMBER SIZES	1
MATERIAL DATA	2
EXTENSION DATA	3

ALBUQUERQUE, NM POLE SERIES

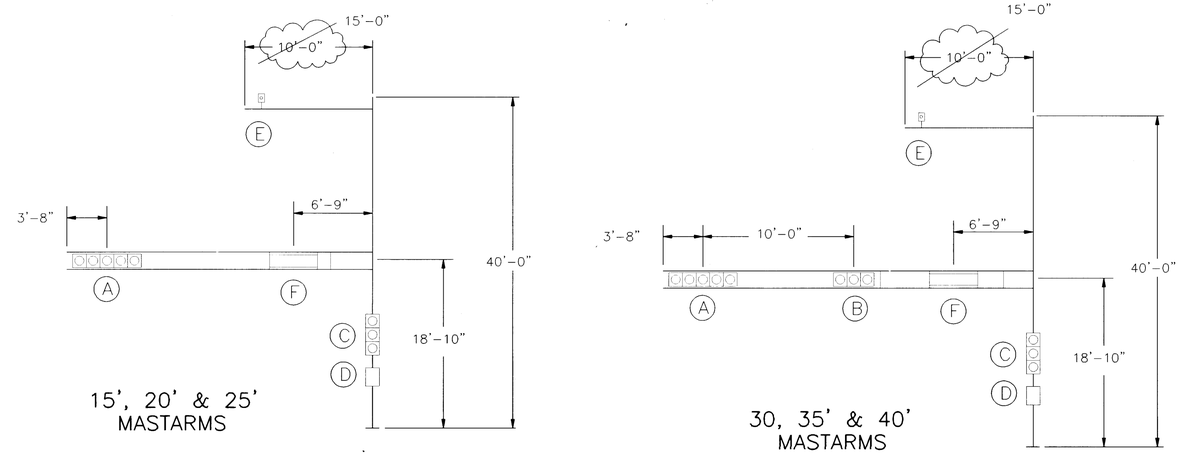

DEVICE	DESCRIPTION	PROJ AREA (FT^2)	WEIGHT (LBS)
A	12"-5 SEC. SIGNAL WITH BACKPLATE	13.33	75
B	12"-3 SEC. SIGNAL WITH BACKPLATE	8.67	50
C	DUAL 12"-3 SEC. SIGNAL WITHOUT BACKPLATES	8.20	100
D	DUAL PEDESTRIAN SIGNAL	3.00	60
E	VIDEO CAMERA	1.00 EPA	35
F	FREE SWINGING STREET NAME -96" X 16"	3.00 EPA	35

DESIGN CRITERIA:

1985 AASHTO STANDARD SPECIFICATIONS FOR STRUCTURAL SUPPORTS FOR HIGHWAY SIGNS, LUMINAIRES, AND TRAFFIC SIGNALS.

WIND VELOCITY:

80 MPH ISOTACH

LOADING INFORMATION

TABLE 1: POLE AND MASTARM SCHEDULE

DESIGNATION (SEE EXAMPLE ABOVE)				POLE DATA				BASE PLATE DATA				ANCHOR BOLT DATA				MASTARM DATA				ARM ATTACHMENT DATA				
POLE SERIES	POLE TYPE	SIGNAL ARM SPAN (FT)	CAMERA MOUNTING HEIGHT 0=NO CAMERA	BASE DIA	TOP DIA	LENGTH	GA	CIRCLE "C"	THK "G"	BC RANGE BC1	BC RANGE BC2	BOLT CIRCLE	DIAMETER "K"	LENGTH "J"	HOOK "H"	FIXED END DIA	FREE END DIA	GA	LENGTH (FT)	"A"	"B"	"C"	"D"	"E"
ALB	2	15	0, 30, 35, 40	10.00"	7.06"	21'-0"	7	23.00"	1.50"	16.00"	19.00"	16.00"	1.50"	54"	6"	5.80"	3.70"	11	15	7.25"	9.44"	10.81"	10.38"	1.00"-8UNC X 8.00"
ALB	2	20	0, 30, 35, 40	10.00"	7.06"	21'-0"	7	23.00"	1.50"	16.00"	19.00"	16.00"	1.50"	54"	6"	6.50"	3.70"	11	20	7.25"	9.44"	10.81"	10.38"	1.00"-8UNC X 8.00"
ALB	2	25	0, 30, 35, 40	10.00"	7.06"	21'-0"	7	23.00"	1.50"	16.00"	19.00"	16.00"	1.50"	54"	6"	7.00"	3.50"	11	25	7.25"	9.44"	10.81"	10.38"	1.00"-8UNC X 8.00"
ALB	2	30	0, 30, 35, 40	12.00"	9.06"	21'-0"	5	23.00"	1.50"	16.00"	19.00"	16.00"	1.50"	54"	6"	7.72"	3.52"	7	30	9.25"	11.44"	13.81"	12.38"	1.00"-8UNC X 9.00"
ALB	2	35	0, 30, 35, 40	12.00"	9.06"	21'-0"	5	23.00"	1.50"	16.00"	19.00"	16.00"	1.50"	54"	6"	8.30"	3.40"	7	35	9.25"	11.44"	13.81"	12.38"	1.00"-8UNC X 9.00"
ALB	2	40	0, 30, 35, 40	12.00"	9.06"	21'-0"	5	23.00"	1.50"	16.00"	19.00"	16.00"	1.50"	54"	6"	9.00"	3.40"	7	40	9.25"	11.44"	13.81"	12.38"	1.00"-8UNC X 9.00"

TABLE 2: MATERIAL DATA

COMPONENT	ASTM DESIGNATION	MIN. YIELD (KSI)	COMPONENT	ASTM DESIGNATION	MIN YIELD (KSI)
POLE TUBE	A595 GR A	55	SIGNAL ARM CLAMP	A36	36
BASE PLATE	A36	36	SIGNAL ARM CONN BOLTS	A325 *	
MAST ARM TUBE	A595 GR A	55	CAMERA ARM PLATES	A36	36
CAMERA ARM TUBE	A595 GR A	55	GALVANIZING	A123 & A153	
POLE EXTENSION	A595 GR A	55			
ANCHOR BOLTS AASHTO M314 GR. 55					

* LUBRICATE IN FIELD IF NECESSARY IN LIEU OF THE REQUIREMENT IN A325

TABLE 3: EXTENSION TUBE DATA

MASTARM LENGTH (FT)	CAMERA MTG HT (FT)	EXTENSION TUBE BASE DIA	EXTENSION TUBE TOP DIA	EXTENSION TUBE LENGTH (FT)	EXTENSION TUBE GAUGE
15-20	30	7.00	5.74	9.0	11
	35	7.00	5.04	14.0	11
	40	7.00	4.34	19.0	11
30-40	30	9.00	7.74	9.0	11
	35	9.00	7.04	14.0	11
	40	9.00	6.34	19.0	11

ALB - 3 - 25 - 40

- CAMERA MOUNTING HEIGHT (0,30',35',OR 40')
- SIGNAL ARM SPAN (15',20',25',30',35',40')
- POLE TYPE
- ALBUQUERQUE POLE SERIES (ALB)

DESIGNATION EXAMPLE **

** POLE SHAFTS SHALL BE MARKED "ALB" "15-25" OR "30-40", AND DATE OF FABRICATION (MONTH/YEAR). APPROXIMATELY AT HAND HOLE ACCESS ± 1 FOOT.

WILLIAM C. HEWITT NEW MEXICO 8131 REGISTERED PROFESSIONAL ENGINEER 4/16/97

RECORD DRAWING
DATE: 11-19-97

AS-BUILT INFORMATION
CONTRACTOR Jaynes Corp DATE 10/97
WORK STAKED BY BH DATE 10/97
INSPECTOR'S AUDIT COMPLETED BY BH DATE 10/97
FIELD VERIFICATION BY BH DATE 10/97
DRAWINGS CORRECTED BY BH DATE 10/97

BENCH MARKS

SURVEY INFORMATION
FIELD NOTES
NO. BY DATE

MICRO-FILM INFORMATION
RECORDED BY DATE
NO.

ENGINEER'S SEAL
William C. Hewitt 6-19-97

NO.	DATE	REMARKS	BY
		REVISIONS	
		DESIGN	
		DESIGNED BY BHI\COA	DATE 3-97
		DRAWN BY BHI\COA	DATE 3-97
		CHECKED BY BHI\COA	DATE 3-97

BOHANNAN-HUSTON INC.
ENGINEERS • PLANNERS • PHOTOGRAMMETRISTS • SURVEYORS • LANDSCAPE • ARCHITECTS
ALBUQUERQUE LAS CRUCES SANTA FE

CITY OF ALBUQUERQUE
PUBLIC WORKS DEPARTMENT
ENGINEERING DEVELOPMENT GROUP

TRAFFIC SIGNAL MASTARM DETAILS
TYPE III STANDARD, GALVANIZED STEEL

DESIGN REVIEW COMMITTEE	CITY ENGINEER APPROVAL	LAST DESIGN UPDATE	MO./DAY/YR.	MO./DAY/YR.

CITY PROJECT NO.	ZONE MAP NO.	SHEET	OF
562181	E 22	26	36

PLANNED BY
BY LASON

TRANQ\TD\6232\11 SHEET-SIGNAL\ABEMADSA.DWG

ABEMADSA.DWG

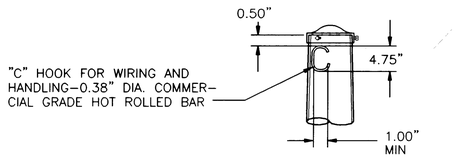

DETAIL 1 | POLE TOP

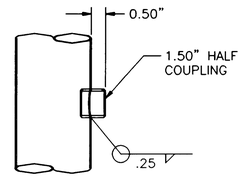

DETAIL 5 | POLE COUPLING

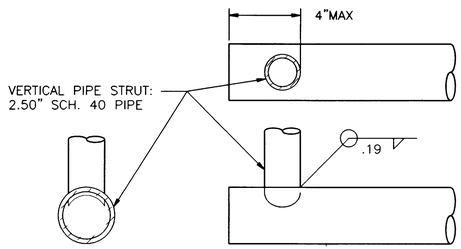

DETAIL 8 | END PIPE STRUT

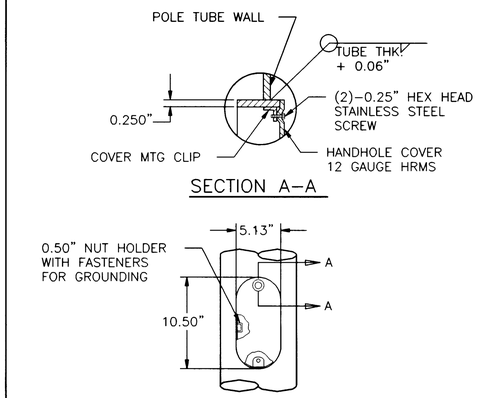

DETAIL 11 | HANDHOLE

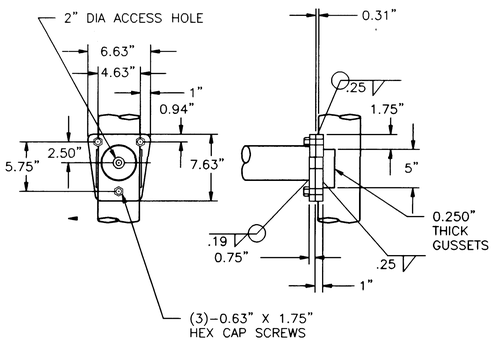

DETAIL 2 | CAMERA ARM ATTACHMENT

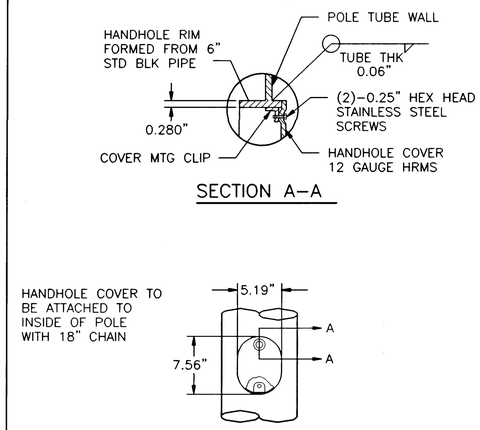

DETAIL 6 | EXTENSION HANDHOLE

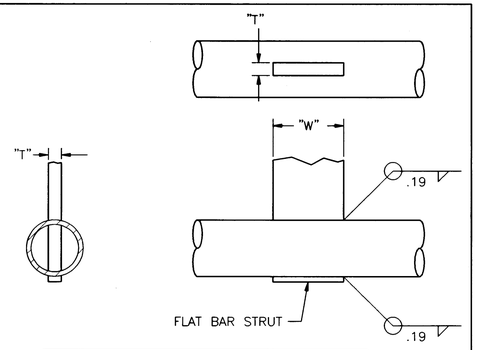

STRUT	ARM SPAN 15' THRU 25' "W" X "T"	ARM SPAN 30' THRU 40' "W" X "T"
A	5" X 0.50"	7" X 0.50"
B	———	5" X 0.50"

DETAIL 9 | MID BAR STRUT

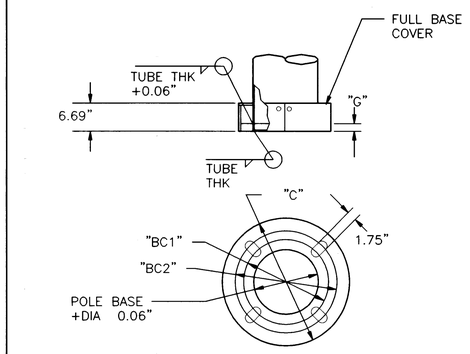

DETAIL 12 | POLE BASE

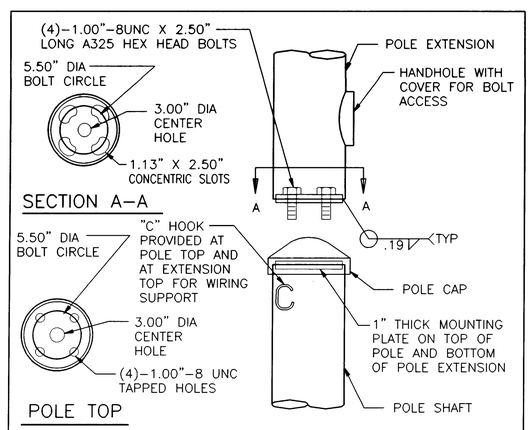

DETAIL 4 | POLE EXTENSION CONNECTION

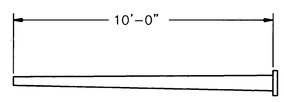

DETAIL 3 | CAMERA ARM

SEE DETAIL 6

DETAIL 7 | HANDHOLE

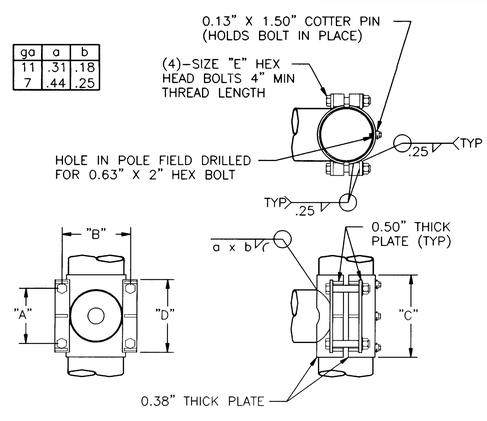

ga	a	b
11	.31	.18
7	.44	.25

DETAIL 10 | SIGNAL ARM ATTACHMENT

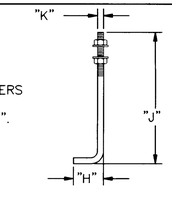

DETAIL 13 | ANCHOR BOLT

AS–BUILT INFORMATION
CONTRACTOR Barnes Corp DATE 10/97
REDLINE STAKED BY B.H. DATE 10/97
INSPECTOR'S AS-BUILTS MARKED BY B.H. DATE 10/97
FIELD VERIFICATION BY B.H. DATE 10/97
DRAWINGS CORRECTED BY B.H. DATE 10/97
MICRO-FILM INFORMATION
RECORDED BY DATE
NO.

BENCH MARKS

SURVEY INFORMATION
FIELD NOTES
NO. | BY | DATE

ENGINEER'S SEAL
4-28-97

NO.	DATE	REMARKS	BY
		REVISIONS	

DESIGN
DESIGNED BY BHI\COA DATE 3-97
DRAWN BY BHI\COA DATE 3-97
CHECKED BY BHI\COA DATE 3-97

RECORD DRAWING
DATE: 11-19-97

BOHANNAN-HUSTON INC.
ENGINEERS • PLANNERS • PHOTOGRAMMETRISTS • SURVEYORS • LANDSCAPE ARCHITECTS
ALBUQUERQUE LAS CRUCES SANTA FE

CITY OF ALBUQUERQUE
PUBLIC WORKS DEPARTMENT
ENGINEERING DEVELOPMENT GROUP

TRAFFIC SIGNAL MASTARM DETAILS
TYPE III STANDARD, MISC DETAILS

DESIGN REVIEW COMMITTEE | CITY ENGINEER APPROVAL | LAST DESIGN UPDATE | MO./DAY/YR. | MO./DAY/YR.

CITY PROJECT NO.	ZONE MAP NO.	SHEET	OF
562181	E–22	27	36

ABET3MSD.DWG

SCANNED BY BY LASON

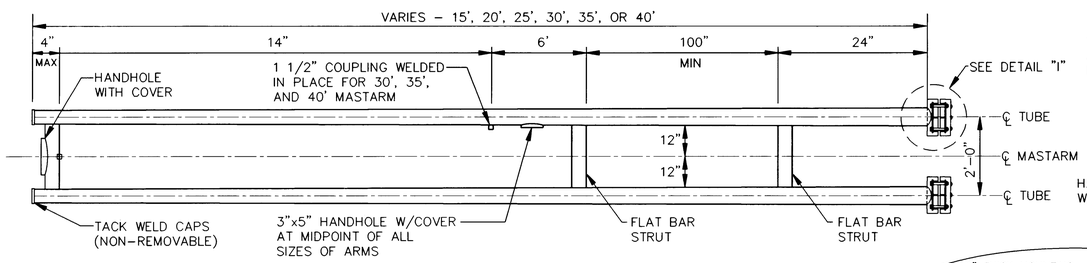

TYPICAL MASTARM DETAIL

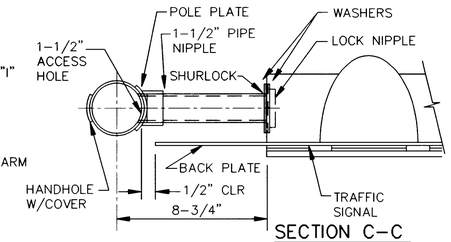

SECTION C–C

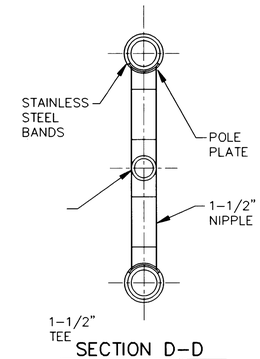

SECTION D–D

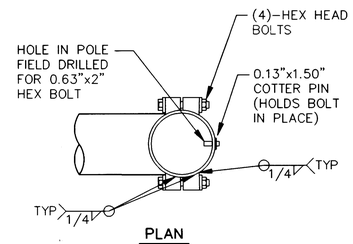

PLAN

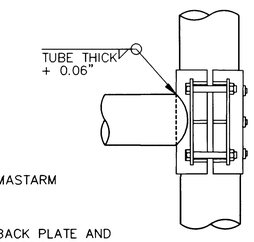

ELEVATION

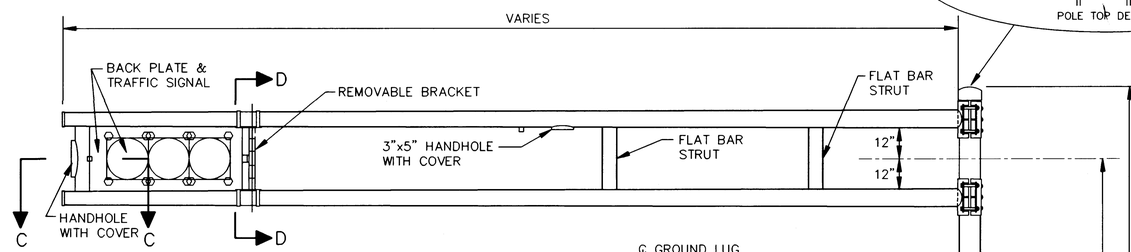

3–SECTION TRAFFIC SIGNAL

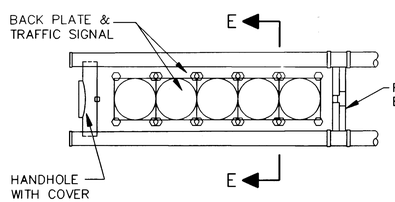

5–SECTION TRAFFIC SIGNAL

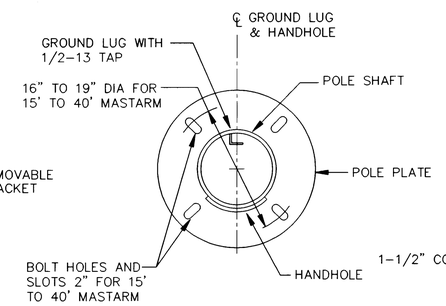

SECTION A–A

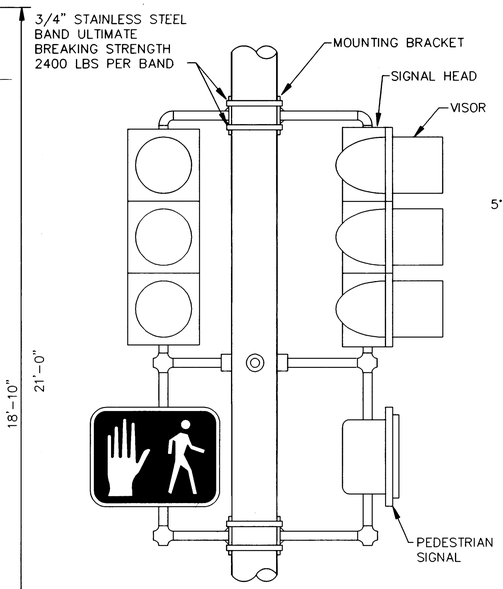

SECTION F–F

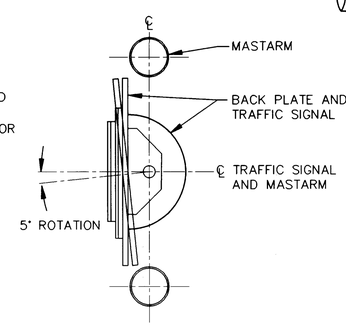

SECTION E–E

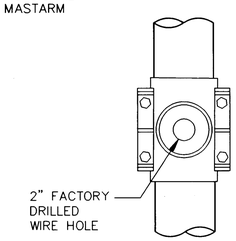

SECTION

DETAIL I

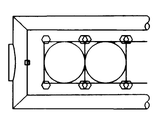

MITERED ARM END (OPTIONAL)

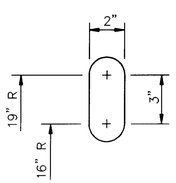

POLE PLATE SLOT DETAIL

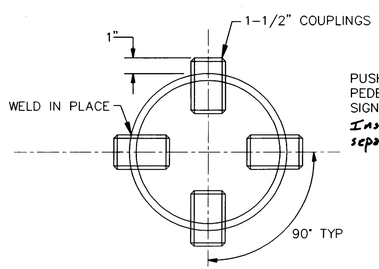

SECTION B–B

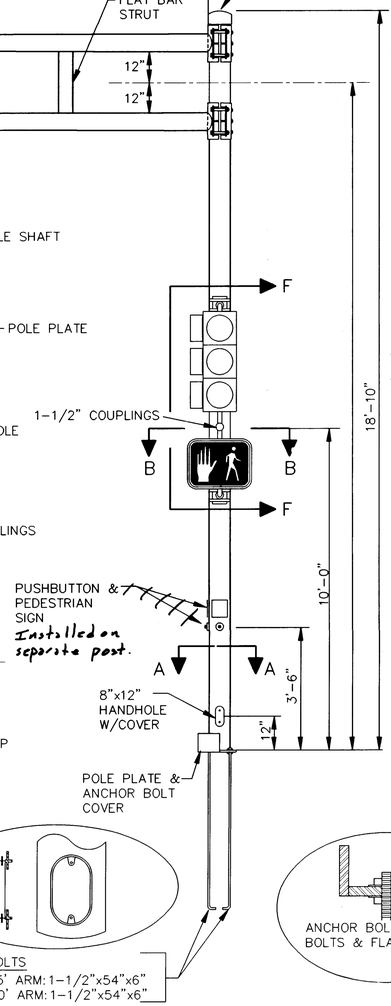

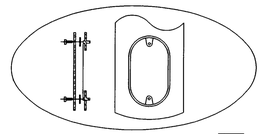

ANCHOR BOLTS
15', 20', 25' ARM: 1-1/2"x54"x6"
30', 35', 40' ARM: 1-1/2"x54"x6"

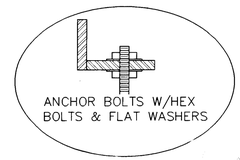

ANCHOR BOLTS W/HEX BOLTS & FLAT WASHERS

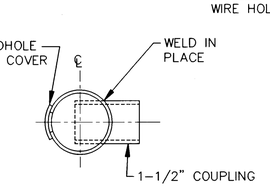

SECTION G–G

NOTE: ONE SIZE ARM CLAMP FOR 15' TO 25' MASTARMS AND ONE SIZE FOR 30' TO 40' MASTARMS WILL BE ALLOWED

TRAFFIC SIGNAL MASTARM NOTES:

1. DESIGN IN ACCORDANCE WITH 1985 AASHTO SPECIFICATIONS FOR STRUCTURAL SUPPORTS FOR HIGHWAY SIGNS, LUMINARIES, AND TRAFFIC SIGNALS FOR AN 80 MPH WIND ZONE.
2. POLES AND MASTARMS SHAFTS SHALL CONFORM TO ASTM A-595 GRADE A (MIN YIELD 55 KSI)
3. BASE PLATE AND SIGNAL ARM CLAMP SHALL BE ASTM A-36 (MIN YIELD 36 KSI).
4. ANCHOR BOLTS SAHLL BE ASTM A-36 MOD 55 (MIN YIELD 55 KSI)
5. SIGNAL ARM CONNECTING BOLTS SHALL BE ASTM A-325.
6. WELDING SHALL CONFORM TO THE REQUIREMENTS OF THE AMERICAN WELDING SOCIETY SPECIFICATIONS AWS D1.1. LATEST EDITION. ALL WELDS SHALL BE FREE FROM CRACKS, EXCESSIVE UNDERCUT, AND POROSITY. ANY WELD DEFECTS SHALL BE REPAIRED BY REMOVING THE DEFECTIVE MATERIAL AND REPLACING IT WITH SOUND WELD MATERIAL.
7. ALL HOLES SHALL BE DRILLED AND DEBURRED.
8. ALL POLES, MASTARMS, AND BOLTS SHALL BE GALVANIZED TO ASTM A-123 & A-153.
9. MASTARM SHALL BE MARKED TO DESCRIBE WHICH IS TOP AND WHICH IS BOTTOM. POLE PLATE COVER SHALL BE MARKED IN MATED PAIRS. POLE SHAFTS SHALL BE MARKED "ALB" "15-25" OR "30-40", AND DATE OF FABRICATION (MOUNTH/YEAR).

RECORD DRAWING
DATE: 11-19-97

AS-BUILT INFORMATION
CONTRACTOR Laynes Corp DATE 10/97
STAKED BY BH DATE 10/97
INSPECTOR'S ACCEPTANCE BY BH DATE 10/97
FIELD VERIFICATION BY BH DATE 10/97
DRAWINGS CORRECTED BY BH DATE 10/97
MICRO-FILM INFORMATION
RECORDED BY DATE
NO.

BENCH MARKS

SURVEY INFORMATION
FIELD NOTES
NO. BY DATE

ENGINEER'S SEAL
4-28-97

NO.	DATE	REMARKS	BY
		REVISIONS	
		DESIGN	
		DESIGNED BY BHI\COA	DATE 8-96
		DRAWN BY BHI\COA	DATE 8-96
		CHECKED BY BHI\COA	DATE 8-96

BOHANNAN-HUSTON INC.
ENGINEERS • PLANNERS • PHOTOGRAMMETRISTS • SURVEYORS • LANDSCAPE • ARCHITECTS
ALBUQUERQUE LAS CRUCES SANTA FE

CITY OF ALBUQUERQUE
PUBLIC WORKS DEPARTMENT
ENGINEERING DEVELOPMENT GROUP

TRAFFIC SIGNAL
MASTARM DETAILS–TYPE II STANDARD/GALV STEEL

CITY ENGINEER APPROVAL
LAST DESIGN UPDATE MO./DAY/YR. MO./DAY/YR.

CITY PROJECT NO.	ZONE MAP NO.	SHEET	OF
562181	E-22	28	36

TRANS:T96238A2211.SHEETS.SIGNAL.ABT2DTG.DWG
ABT2DTG.DWG

SCANNED BY BY LASON

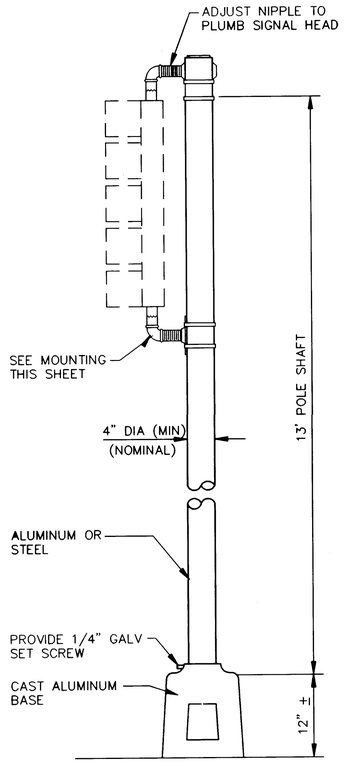

NOTE:
14' MINIMUM FROM BOTTOM OF BASE (ASSEMBLED LENGTH)

TYPE I PEDESTAL POLE DETAILS

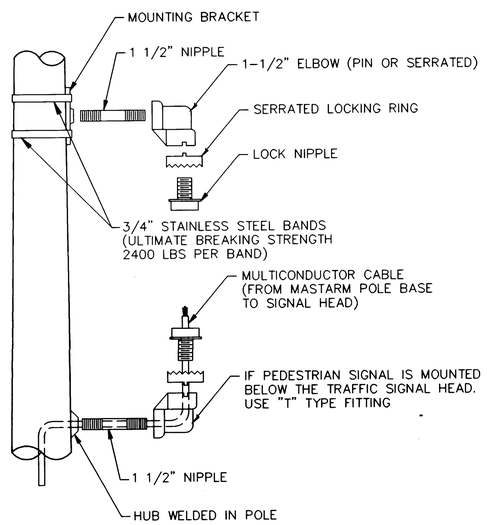

SIDE VIEW

MOUNTING DETAIL

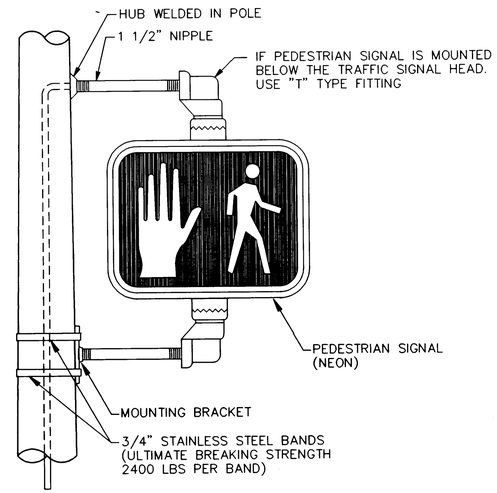

PEDESTRIAN SIGNAL DETAILS

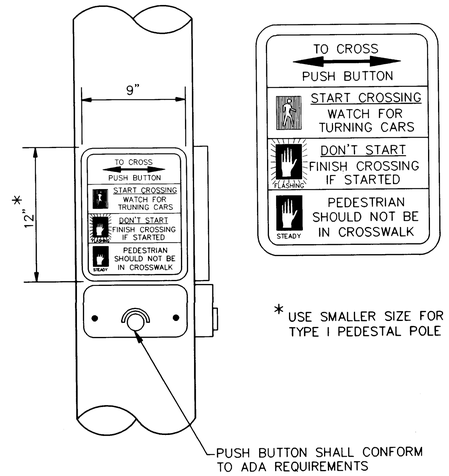

* USE SMALLER SIZE FOR TYPE I PEDESTAL POLE

PEDESTRIAN PUSH BUTTON DETAIL

NOTE:

PEDESTRIAN ACTUATED CROSSING SHALL BE A MAXIMUM OF 42" (1065 mm) ABOVE THE FINISHED PUBLIC SIDEWALK. A STABLE, FIRM, AND SLIP-RESISTANT AREA – 30"x48" (915 mm x 1220 mm) – SHALL BE PROVIDED TO ALLOW FOR A FOWARD OR A PARALLEL APPROACH TO THE CONTROLS. WHERE A PARALLEL IS PROVIDED, CONTROLS SHALL BE WITHIN 10" (255 mm) HORIZONTALLY OF AND CENTERED ON THE CLEAR GROUND SPACE.

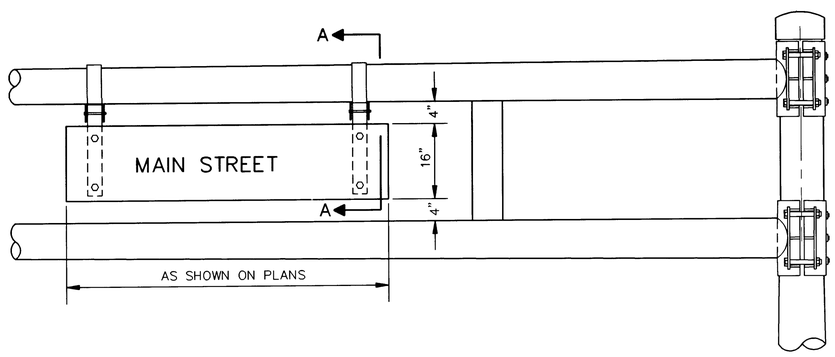

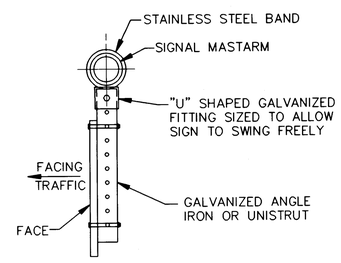

SECTION "A–A"

NOTES:

1. STREET NAME SIGNS REQUIRED AS SHOWN ON SIGNAL PLAN SHEETS.
2. SIGN SHALL BE 16" WIDE WITH 8" SERIES "C" LETTERS UP TO 12 SQUARE FEET TOTAL AREA AND SHALL HAVE HIGH INTENSITY REFLECTIVE LEGEND, BORDER AND BACKGROUND COLORS: WHITE ON GREEN, SIGN PANELS SHALL BE SINGLE SHEET 6061–T6 ALUMINUM .120 MINIMUM THICKNESS.

STREET NAME SIGN DETAILS

RECORD DRAWING
DATE: 11-19-97

AS-BUILT INFORMATION
CONTRACTOR Lyons Corp DATE 10/97
WORK STAKED BY B.H. DATE 10/97
INSPECTOR'S ACCEPTANCE BY B.H. DATE 10/97
FIELD VERIFICATION BY B.H. DATE 10/97
DRAWINGS CORRECTED BY B.H. DATE 10/97
MICRO-FILM INFORMATION
RECORDED BY DATE
NO.

BENCH MARKS

SURVEY INFORMATION
FIELD NOTES
NO. BY DATE

ENGINEER'S SEAL
4-28-97

NO.	DATE	REMARKS	BY
		REVISIONS	
		DESIGN	
		DESIGNED BY BHI\COA	DATE 8-96
		DRAWN BY BHI\COA	DATE 8-96
		CHECKED BY BHI\COA	DATE 8-96

BOHANNAN-HUSTON INC.
ENGINEERS • PLANNERS • PHOTOGRAMMETRISTS • SURVEYORS • LANDSCAPE • ARCHITECTS
ALBUQUERQUE LAS CRUCES SANTA FE

CITY OF ALBUQUERQUE
PUBLIC WORKS DEPARTMENT
ENGINEERING DEVELOPMENT GROUP

TRAFFIC SIGNAL
MISCELLANEOUS DETAILS

DESIGN REVIEW COMMITTEE | CITY ENGINEER APPROVAL | LAST DESIGN UPDATE | MO./DAY/YR. | MO./DAY/YR.

CITY PROJECT NO.	ZONE MAP NO.	SHEET	OF
562181	E-22	29	36

PLANNED BY
LASON

TRAN2[T96238A2211.SHEETS.SIGNAL]ABESGDA.DWG
ABESGDA.DWG

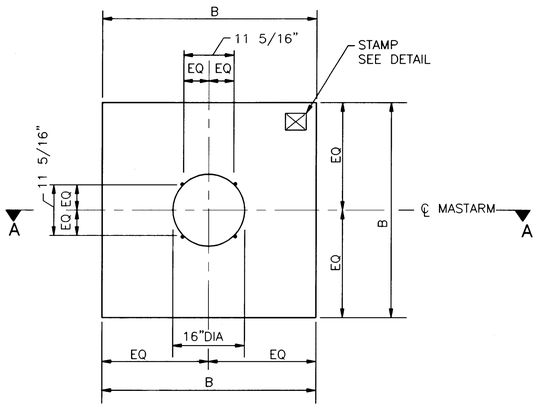

PLAN VIEW (SQUARE)

NO SCALE

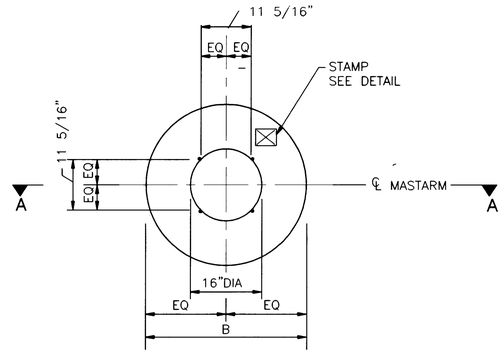

PLAN VIEW (ROUND)

NO SCALE

FOUNDATION DIMENSIONS AND QUANTITIES

FOUNDATION TYPE	SIGNAL ARM SPAN(FT)	DIMENSION B (WIDTH)	DIMENSION D (DEPTH)	REINFORCING V BARS MARK	REINFORCING H BARS MARK	REBAR POUNDS	3500 PSI CONCRETE CUBIC YARDS	NOTES
TYPE A (SQUARE)	15	3'-6"	5'-0"	#4V2	#3H2	49.1 •	2.27	
	20	"	"	"	"		"	
	25	"	"	"	"		"	
TYPE B (SQUARE)	30	4'-0"	6'-3"	#5V1	#3H1	82.6	3.70	
	35	"	"	"	"		"	
	40	"	"	"	"		"	
TYPE A (ROUND)	15	2'-6"	8'-6"	#6V4	#3H4	98.1	1.55	ROUND SHAPE TO BE USED ONLY WHERE SPECIFICALLY NOTED ON PLANS OR WHEN APPROVED BY THE PROJECT MANAGER.
	20	"	"	"	"		"	
	25	"	"	"	"		"	
TYPE B (ROUND)	30	3'-0"	11'-9"	#7V3	#3H3	179.7	3.08	
	35	"	"	"	"		"	
	40	"	"	"	"		"	

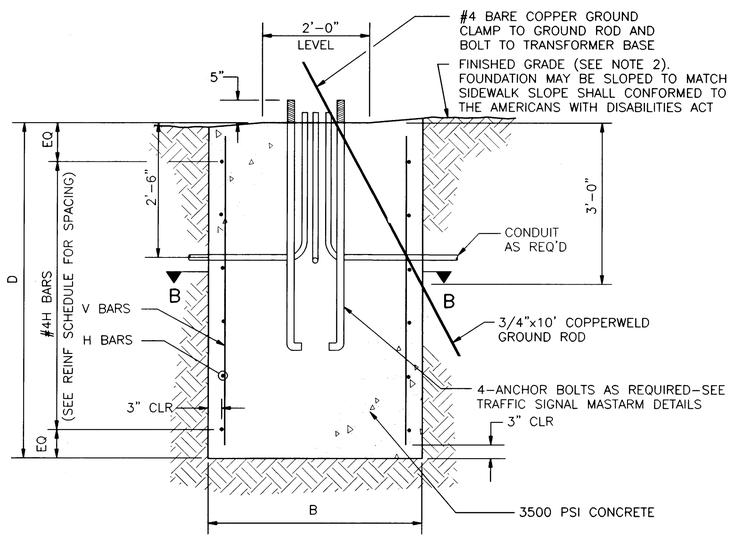

SECTION A-A (ROUND OR SQUARE)

NO SCALE

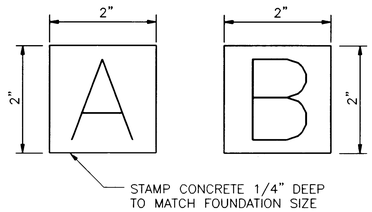

STAMP DETAIL

NO SCALE

REINFORCING SCHEDULE (GRADE 60 BARS)

MARK	QUANT	TYPE	SIZE	LENGTH	COMMENTS
#5V1	8	1	5	5'-9"	
#4V2	8	1	4	4'-6"	
#7V3	6	1	7	11'-3"	
#6V4	6	1	6	8'-0"	
#3H1	6	2	3	15'-4"	A = 42",TIES AT 14" OC
#3H2	5	2	3	13'-4"	A = 36",TIES AT 12" OC
#3H3	12	3	3	9'-3"	DIA = 30",TIES AT 12" OC
#3H4	9	3	3	7'-8"	DIA = 24",TIES AT 12" OC

TRAFFIC SIGNAL MASTARM FOUNDATION NOTES

1. REFER TO THE PLANS FOR LOCATIONS OF TRAFIC SIGNAL MASTARM FOUNDATIONS.
2. FINISHED GRADE FOR THE FOUNDATIONS SHALL BE ESTABLISHED IN THE FIELD BY THE PROJECT MANAGER.
3. THE FOUNDATIONS SHOWN HERE SHALL BE CONSTRUCTED IN ACCORDANCE WITH THE CITY OF ALBUQUERQUE STANDARD SPECIFICATIONS FOR PUBLIC WORKS CONSTRUCTION, CURRENT REVISION.
4. CONCRETE SHALL BE 3500 PSI FOR EXTERIOR STRUCTURES. REFER TO TABLE 101.C OF THE SPECIFICATIONS.
5. REINFORCING STEEL SHALL CONFORM TO ASTM A-615 GRADE 60.
6. THE TOP 6 INCHES OF THE FOUNDATION PEDESTAL SHALL BE FORMED TO THE DIMENSIONS SHOWN ON THIS SHEET TO FORM NEAT LINES. CONCRETE BELOW 6 LINES MAY BE CAST AGAINST THE EARTH.
7. THE CONCRETE SHALL GAIN 80% OF THE DESIGN STRENGTH PRIOR TO INSTALLING THE TRAFFIC SIGNAL MASTARM.
8. ALL FOUNDATIONS SHALL INCLUDE COPPERWELD GROUND RODS. ALL GROUND RODS SHALL BE 3/4" DIA X 10'-0" AND WILL BE CONSIDERED INCIDENTAL TO THE FOUNDATIONS BID ITEMS.
9. ALL FOUNDATIONS SHALL BE STAMPED EITHER "A" OR "B" TO SHOW TYPE CONSTRUCTED (SEE STAMP DETAIL).

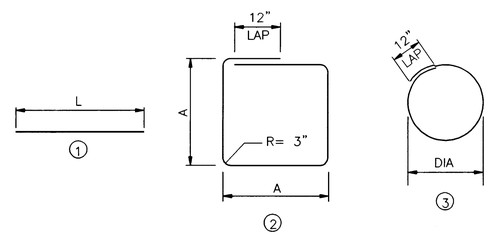

BAR BENDING DIAGRAM

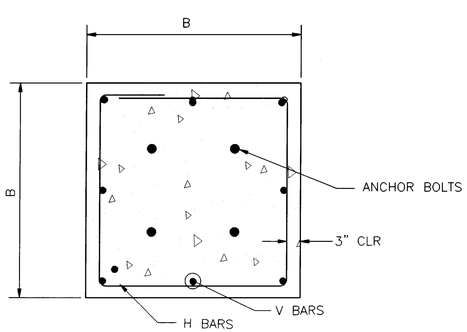

SECTION B-B (SQUARE)

NO SCALE

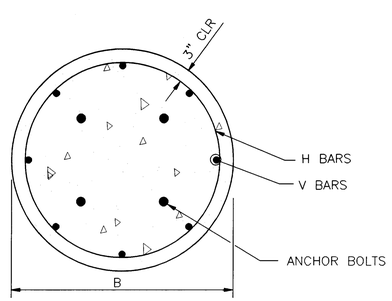

SECTION B-B (ROUND)

NO SCALE

AS-BUILT INFORMATION

CONTRACTOR Jaynes Corp. DATE 10/97
STAKED BY B.H. DATE 10/97
INSPECTOR'S ACCEPTANCE BY B.H. DATE 10/97
FIELD VERIFICATION BY B.H. DATE 10/97
DRAWINGS CORRECTED BY B.H. DATE 10/97
MICRO-FILM INFORMATION
RECORDED BY DATE
NO.

BENCH MARKS

SURVEY INFORMATION

NO.	FIELD NOTES BY	DATE

ENGINEER'S SEAL

4-28-97

NO.	DATE	REMARKS	BY
		REVISIONS	
		DESIGN	
		DESIGNED BY BHI\COA	DATE 8-96
		DRAWN BY BHI\COA	DATE 8-96
		CHECKED BY BHI\COA	DATE 8-96

RECORD DRAWING
DATE: 11-19-97

BOHANNAN-HUSTON INC.
ENGINEERS • PLANNERS • PHOTOGRAMMETRISTS • SURVEYORS • LANDSCAPE ARCHITECTS
ALBUQUERQUE LAS CRUCES SANTA FE

CITY OF ALBUQUERQUE
PUBLIC WORKS DEPARTMENT
ENGINEERING DEVELOPMENT GROUP

TRAFFIC SIGNAL
MASTARM FOUNDATION DETAILS
TYPE II AND TYPE III STANDARDS

DESIGN REVIEW COMMITTEE | CITY ENGINEER APPROVAL | LAST DESIGN UPDATE | MO./DAY/YR. | MO./DAY/YR.

CITY PROJECT NO.	ZONE MAP NO.	SHEET	OF
562181	E-22	30	36

SCANNED BY
BY LASON

ABESFND.DWG

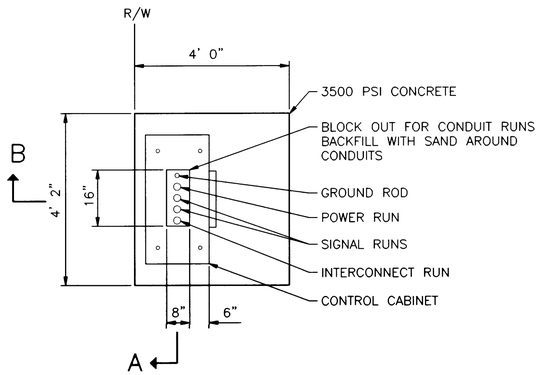

PLAN

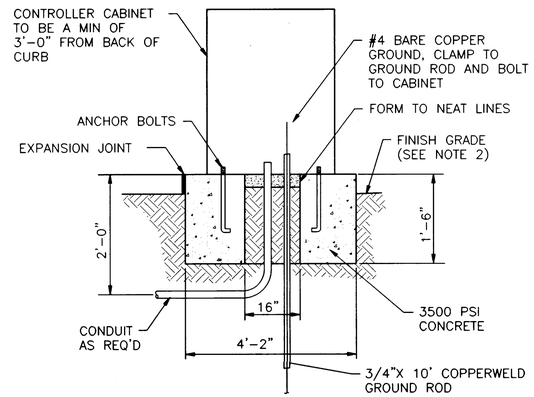

SECTION A

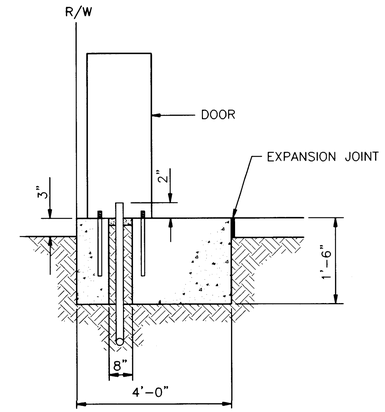

SECTION B

CONTROLLER FOUNDATION DETAIL

IN THE EVENT THE SUPPLIED CABINET WOULD OVERLAP THE SIDES OF ABOVE FOUNDATION. THE FOUNDATION SHALL BE INCREASED IN SIZE AS DIRECTED BY THE ENGINEER.

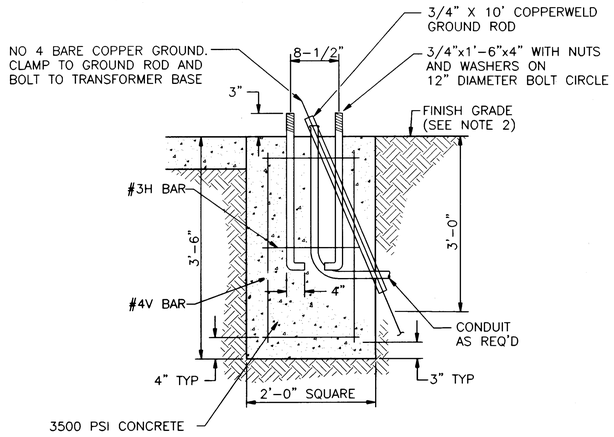

PEDESTAL FOUNDATION DETAIL

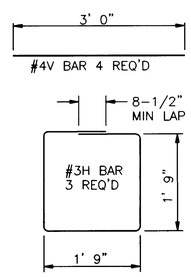

REINFORCING STEEL

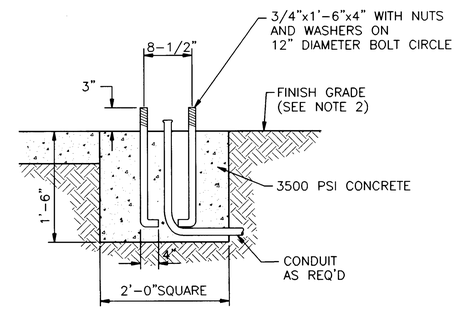

SPLICE CABINET FOUNDATION DETAIL

ESTIMATED QUANTITIES

FOUNDATION TYPE	3500 PSI CONCRETE CU YD	REINFORCING BARS POUNDS
PEDESTAL FOUNDATION	0.52	17
CONTROLLER FOUNDATION (TYPE M & P)	0.88	--
SPLICE CABINET FOUNDATION	0.13	--

(FOR CONTRACTORS INFORMATION ONLY)

TRAFFIC SIGNAL FOUNDATION NOTES

1. ALL FOUNDATIONS SHALL INCLUDE COPPERWELD GROUND RODS. ALL GROUND RODS SHALL BE 3/4" Ø x 10'-0" AND WILL BE CONSIDERED INCIDENTAL TO THE FOUNDATION BID ITEMS.
2. FINISHED GRADE FOR ALL FOUNDATIONS TO BE DETERMINED IN THE FIELD BY THE PROJECT ENGINEER. FOUNDATIONS MAY BE SLOPED TO MATCH SIDEWALKS. SLOPES SHALL CONFORM TO THE AMERICANS WITH DISABILITIES ACT REQUIREMENTS.

AS-BUILT INFORMATION
CONTRACTOR Jaynes Corp DATE 10/97
WORK STAKED BY BH DATE 10/97
INSPECTOR'S NOTES BY BH DATE 10/97
FIELD VERIFICATION BY BH DATE 10/97
DRAWINGS CORRECTED BY BH DATE 10/97
MICRO-FILM INFORMATION
RECORDED BY DATE
NO.

BENCH MARKS

SURVEY INFORMATION
FIELD NOTES

NO.	BY	DATE

ENGINEER'S SEAL
4-28-97

NO.	DATE	REMARKS	BY
		REVISIONS	
		DESIGN	
		DESIGNED BY BHI\COA	DATE 8-96
		DRAWN BY BHI\COA	DATE 8-96
		CHECKED BY BHI\COA	DATE 8-96

WILLIAM E. HUNT, 6131, REGISTERED PROFESSIONAL ENGINEER, 4/16/98

RECORD DRAWING
DATE: 11-19-97

BOHANNAN-HUSTON INC.
ENGINEERS • PLANNERS • PHOTOGRAMMETRISTS • SURVEYORS • LANDSCAPE • ARCHITECTS
ALBUQUERQUE LAS CRUCES SANTA FE

CITY OF ALBUQUERQUE
PUBLIC WORKS DEPARTMENT
ENGINEERING DEVELOPMENT GROUP

TRAFFIC SIGNAL CONTROL CABINET & PEDESTAL FOUNDATION DETAILS

DESIGN REVIEW COMMITTEE: DESIGN REVIEW IN PROGRESS
CITY ENGINEER APPROVAL
LAST DESIGN UPDATE | MO./DAY/YR. | MO./DAY/YR.

CITY PROJECT NO.	ZONE MAP NO.	SHEET	OF
562181	E-22	31	36

TRAN2:[T96238A221.SHEETS.SIGNAL]ABPDCNFD.DWG
ABPDCNFD.DWG

SCANNED BY BY LASON

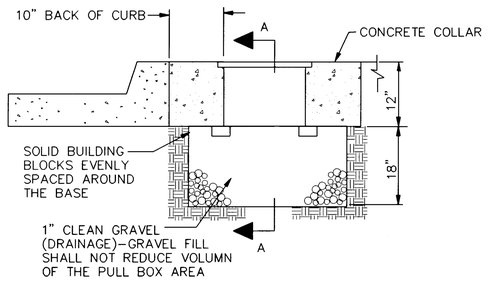

TYPICAL PULLBOX INSTALLATION

NOTE: SEE "CONCRETE COLLER DETAIL"

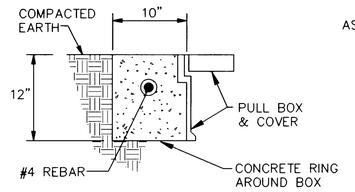

IN COMPACTED EARTH

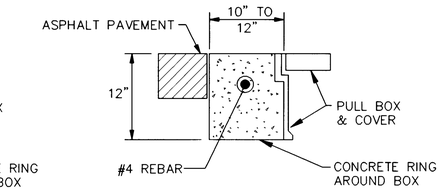

IN ASPHALT PAVEMENTS

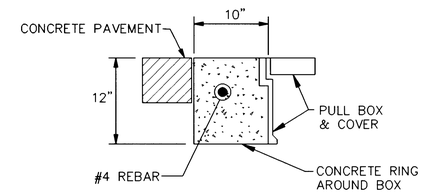

IN CONCRETE PAVEMENTS

CONCRETE COLLAR DETAILS

NOTE: THE CONCRETE COLLAR FOR THE PULL BOXES WILL BE CONSIDERED INCIDENTAL TO THE PULL BOX BID ITEMS

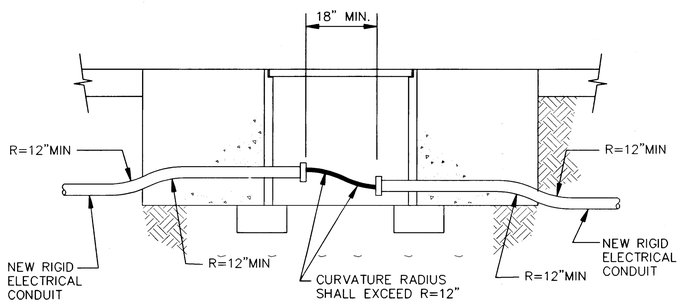

TRAFFIC SIGNAL PULL BOX (TYPICAL)

NEW CONDUIT INSTALLATION

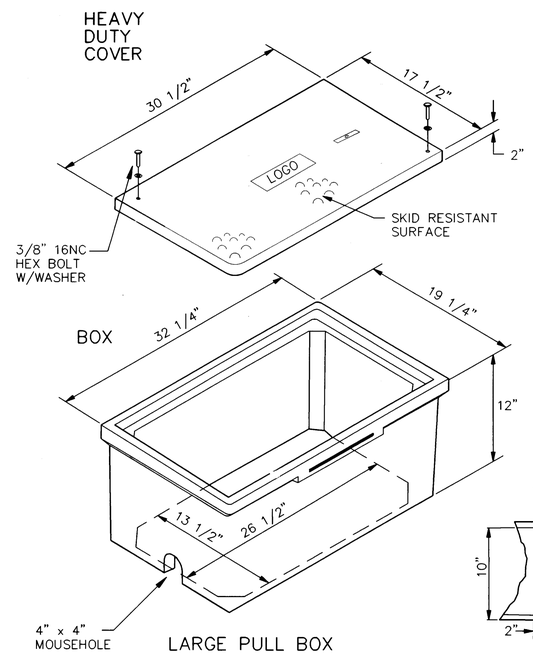

LARGE PULL BOX

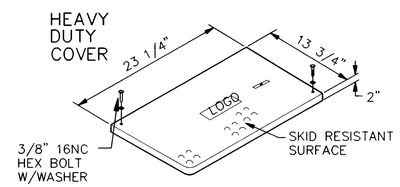

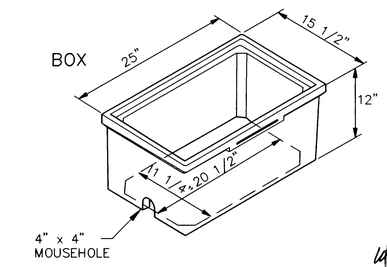

STANDARD PULL BOX

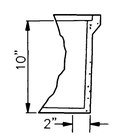

PULL BOX DETAILS

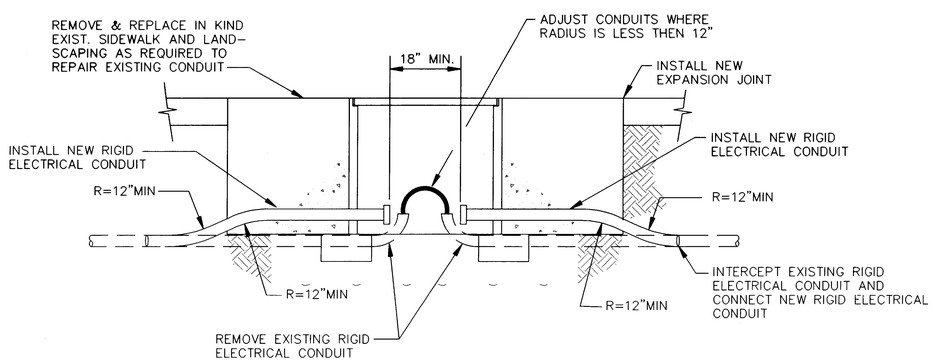

TRAFFIC SIGNAL PULL BOX (TYPICAL)

RETROFIT INSTALLATION

RECORD DRAWING
DATE: 11-19-97

NOTES FOR HEAVY DUTY REINFORCED POLYMER MORTAR PULL BOX AND COVERS

1. MATERIAL TO BE AN AGGREGATE CONSISTING OF SAND AND GRAVEL BOUND TOGETHER WITH A POLYMER AND REINFORCED WITH CONTINUOUS WOVEN GLASS STRANDS. THE MATERIAL MUST HAVE THE FOLLOWING MECHANICAL PROPERTIES: COMPRESSIVE STRENGTH – 11,000 PSI, TENSILE STRENGTH – 1,700 PSI, FLEXURAL STRENGTH – 7,500 PSI.
2. ALL PULL BOX COVERS SHALL BE HEAVY DUTY REINFORCED POLYMER MORTAR, HAVING A SERVICE LOAD OF 22,568 LBS. OVER 10" SQUARE (225 PSI).
3. PULL BOX TYPE AND LOGO SHALL BE APPROVED BY THE PROJECT MANAGER.
4. THE DIMENSIONS OF THE PULL BOXES SHOWN ARE NOMINAL DIMENSIONS AND MAY VARY AS TO THE MANUFACTURER'S RECOMENDATIONS. ALL DIMENSIONS SHALL BE VERIFIED BY THE PROJECT MANAGER.
5. ELECTRICAL PULL BOX (STANDARD) SHALL BE A HEAVY DUTY REINFORCED POLYMER MORTAR PULL BOX AND COVER MEASURING 13 3/4" x 23 1/4" x 2".

AS-BUILT INFORMATION
CONTRACTOR Jaynes Corp. DATE 10/97
WORK STAKED BY BH DATE 10/97
INSPECTOR'S ACCEPTANCE BY BH DATE 10/97
FIELD VERIFICATION BY BH DATE 10/97
DRAWINGS CORRECTED BY BH DATE 10/97
MICRO-FILM INFORMATION
RECORDED BY DATE
NO.

BENCH MARKS

SURVEY INFORMATION
FIELD NOTES
NO. BY DATE

ENGINEER'S SEAL

NO.	DATE	REMARKS	BY
		REVISIONS	
		DESIGN	

DESIGNED BY BHI\COA DATE 8-96
DRAWN BY BHI\COA DATE 8-96
CHECKED BY BHI\COA DATE 8-96

BOHANNAN-HUSTON INC.
ENGINEERS • PLANNERS • PHOTOGRAMMETRISTS • SURVEYORS • LANDSCAPE ARCHITECTS
ALBUQUERQUE LAS CRUCES SANTA FE

CITY OF ALBUQUERQUE
PUBLIC WORKS DEPARTMENT
ENGINEERING DEVELOPMENT GROUP

TRAFFIC SIGNAL
PULL BOX DETAILS

DESIGN REVIEW COMMITTEE | CITY ENGINEER APPROVAL | LAST DESIGN UPDATE | MO./DAY/YR. | MO./DAY/YR.

CITY PROJECT NO.	ZONE MAP NO.	SHEET	OF
562181	E-22	32	36

SCANNED BY BY LASON

TRANS[T96238A221.1 SHEETS SIGNAL]MPPBDET.DWG

AB. BDET.DWG

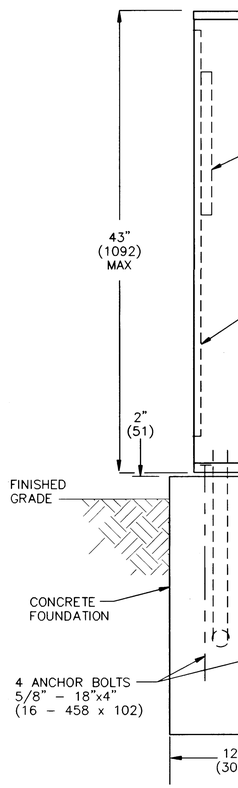

LEFT SIDE

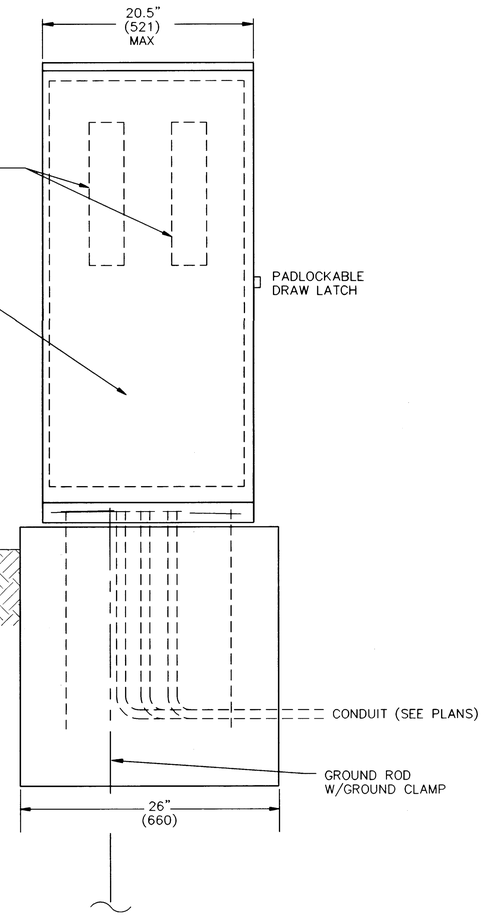

FRONT VIEW

SCALE: NONE
DIMENSIONS ARE – #.##", (###) MILLIMETERS

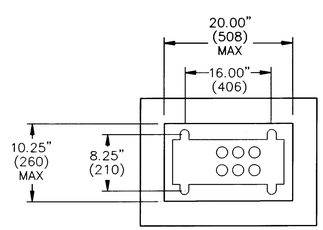

BASE PLAN

CONSTRUCTION MATERIALS AND FINISH

- [x] 12 GA HD GALVANIZED SHEET STEEL
  - [x] POWDER COATED _____
- [ ] 14 GA #304 STAINLESS STEEL SHEET
  - [ ] POWDER COATED COLOR: _____
  - [ ] NATURAL
- [ ] 0.125" ALUMINUM SHEET
  - [ ] POWDER COATED COLOR: _____
  - [ ] NATURAL
  - [ ] ANODIZED

POWDER COAT COLORS

- [x] WHITE
- [ ] RANCH GREEN
- [ ] MINT GREEN
- [ ] OTHER _____
- [ ] CAMEL

SPLICE CABINET CONSTRUCTION NOTES

1. SPLICE CABINET SHALL BE UL LISTED "INDUSTRIAL CONTROL PANEL" PER UL 508.
2. CONSTRUCTION SHALL BE NEMA 3R AND 12, RAIN TIGHT AND DUST TIGHT. ELECTRICALLY WELDED AND REINFORCED WHERE REQUIRED.
3. ALL NUTS, BOLTS, SCREWS AND HINGES SHALL BE STAINLESS STEEL. ELECTRICALLY WELDED AND REINFORCED WHERE REQUIRED.
4. NUTS, BOLTS, AND SCREWS SHALL NOT BE VISIBLE FROM OUTSIDE OF SPLICE CABINET.
5. PHENOLIC NAME PLATES SHALL BE PROVIDED AS REQUIRED.
6. ALL POWDER COATED CABINETS SHALL HAVE A CORROSION RESISTANT COATING WHICH INCLUDES A FIVE STEP DIP TANK METAL PREPARATION PROCESS:
   A. ALKALINE CLEANER 160° F.
   B. CLEAR WATER RINSE.
   C. IRON PHOSPHATE APPLICATION 150°.
   D. CLEAR WATER RINSE.
   E. INHIBITIVE RINSE TO SEAL PHOSPHATED SURFACES 120°.

   FINISHED WITH AN ELECTROSTATICALLY APPLIED DRY POLYESTER POWDER COATING THEN BAKED @ 380° TO CURE.
7. FOUNDATIONS, INCLUDING EXCAVATION, CONCRETE AND ANCHOR BOLTS, COMPLETE–IN PLACE AND BACK FILLED, SHALL BE CONSIDERED INCIDENTAL TO THE SPICE CABINET.

AS–BUILT INFORMATION
CONTRACTOR Gaines Corp. DATE 10/97
WORK STAKED BY BH DATE 10/97
INSPECTOR'S ACCEPTANCE BY BH DATE 10/97
FIELD VERIFICATION BY BH DATE 10/97
DRAWINGS CORRECTED BY BH DATE 10/97
MICRO–FILM INFORMATION
RECORDED BY DATE
NO.

BENCH MARKS

SURVEY INFORMATION
FIELD NOTES
NO. BY DATE

ENGINEER'S SEAL
4-28-97

NO.	DATE	REMARKS	BY
		REVISIONS	

DESIGN
DESIGNED BY BHI\COA DATE 8–96
DRAWN BY BHI\COA DATE 8–96
CHECKED BY BHI\COA DATE 8–96

BOHANNAN-HUSTON INC.
ENGINEERS • PLANNERS • PHOTOGRAMMETRISTS • SURVEYORS • LANDSCAPE • ARCHITECTS
ALBUQUERQUE LAS CRUCES SANTA FE

CITY OF ALBUQUERQUE
PUBLIC WORKS DEPARTMENT
ENGINEERING DEVELOPMENT GROUP

TRAFFIC SIGNAL
SPLICE CABINET GROUND MOUNT (LARGE)

DESIGN REVIEW COMPLETE
CITY ENGINEER APPROVAL
LAST DESIGN UPDATE MO./DAY/YR. MO./DAY/YR.

CITY PROJECT NO. 562181 | ZONE MAP NO. E-22 | SHEET 53 OF 56

4/14/98

RECORD DRAWING
DATE: 11-19-97

TRANSLIT96\238A2311\SHEETS\SIGNAL\ABSPCGML.DWG 8/96
ABSPCGML.DWG

SCANNED BY
BY LASON

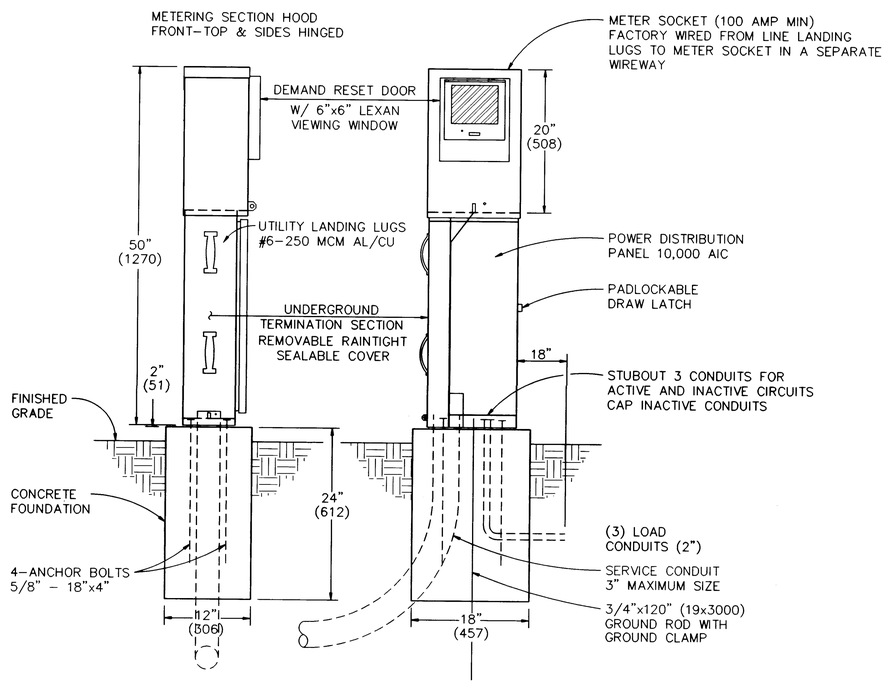

LEFT SIDE FRONT VIEW

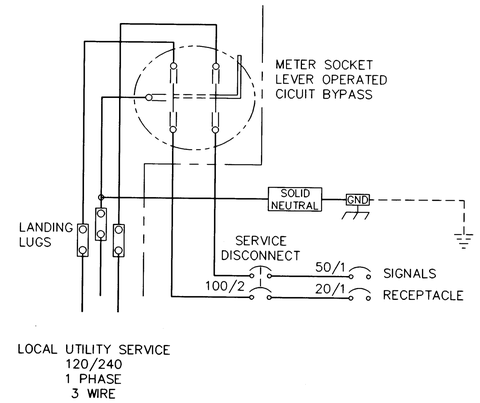

SERVICE EQUIPMENT WIRING DIAGRAM "A"

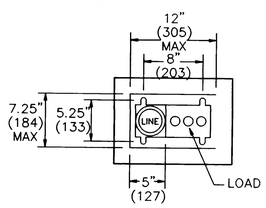

BASE PLAN

SCALE: NONE
DIMENSIONS ARE - #.##" INCHES, (###) MILLIMETER

METER PEDESTAL CONSTRUCTION NOTES

1. METER PEDESTAL SHALL BE UL LISTED "INDUSTRIAL CONTROL PANEL" PER UL 508.
2. METER PEDESTAL SHALL MEET THE ELECTRIC UTILITY SERVICE EQUIPMENT REQUIRMENTS COMMITTEE (EUSERC) GUIDELINES.
3. CONSTRUCTION SHALL BE NEMA 3R AND 12, RAIN TIGHT AND DUST TIGHT. ELECTRICALLY WELDED AND REINFORCED WHERE REQUIRED.
4. ALL NUTS, BOLTS, SCREWS AND HINGES SHALL BE STAINLESS STEEL.
5. NUTS, BOLTS, AND SCREWS SHALL NOT BE VISIBLE FROM OUTSIDE OF METER PEDESTAL.
6. PHENOLIC NAME PLATES SHALL BE PROVIDED AS REQUIRED.
7. CIRCUIT BREAKERS SHALL BE CABLE IN-CABLE OUT WITH LINE ON TOP & LOAD ON THE BOTTOM. HANDLE POSITION UP="ON", MIDDLE="TRIPPED", DOWN="OFF".
8. A PLASTIC COVERED WIRING DIAGRAM SHALL BE ATTACHED TO THE INSIDE OF THE FRONT DOOR.
9. METER PEDESTAL SHALL BE FACTORY WIRED AND CONFORM TO REQUIRED NEMA STANDARDS.
10. ALL POWDER COATED METER PEDESTAL SHALL HAVE A CORROSION RESISTANT COATING WHICH INCLUDES A FIVE STEP DIP TANK METAL PREPARATION PROCESS:
    A. ALKALINE CLEANER 160° F.
    B. CLEAR WATER RINSE.
    C. IRON PHOSPHATE APPLICATION 150°.
    D. CLEAR WATER RINSE.
    E. INHIBITIVE RINSE TO SEAL PHOSPHATED SURFACES 120°.

    FINISHED WITH AN ELECTROSTATICALLY APPLIED DRY POLYESTER POWDER COATING THEN BAKED @ 380° TO CURE.
11. CONCRETE FOUNDATIONS INCLUDING EXCAVATION AND BACKFILL, CONCRETE, AND ANCHOR BOLTS, COMPLETE-IN PLACE, WILL BE CONSIDERED INCIDENTAL TO THE METER PEDESTAL.

CONSTRUCTION MATERIALS AND FINISH

- [x] 12 GA HD GALVANIZED STEEL
  - [x] POWDER COATED _____
- [ ] 14 GA #304 STAINLESS STEEL SHEET
  - [ ] POWDER COATED COLOR _____
  - [ ] NATURAL
- [ ] 0.125" ALUMINUM SHEET
  - [ ] POWDER COATED COLOR _____
  - [ ] NATURAL
  - [ ] ANODIZED

POWDER COAT COLORS

- [x] WHITE
- [ ] RANCH GREEN
- [ ] MINT GREEN
- [ ] OTHER _____
- [ ] CAMEL

PLANNED BY BY LAYNE

RECORD DRAWING
DATE: 11-19-97

AS-BUILT INFORMATION
CONTRACTOR Laynes Corp DATE 10/97
WORK STAKED BY BH DATE 10/97
INSPECTOR'S ACCEPTANCE BY BH DATE 10/97
FIELD VERIFICATION BY BH DATE 10/97
DRAWINGS CORRECTED BY BH DATE 10/97
MICRO-FILM INFORMATION
RECORDED BY DATE
NO.

BENCH MARKS

SURVEY INFORMATION
FIELD NOTES
NO. BY DATE

ENGINEER'S SEAL
Carmen J Yuhasz
4-28-97

NO.	DATE	REMARKS	BY
		REVISIONS	
		DESIGN	

DESIGNED BY BHI\COA DATE 8-96
DRAWN BY BHI\COA DATE 8-96
CHECKED BY BHI\COA DATE 8-96

BOHANNAN-HUSTON INC.
ENGINEERS • PLANNERS • PHOTOGRAMMETRISTS • SURVEYORS • LANDSCAPE • ARCHITECTS
ALBUQUERQUE LAS CRUCES SANTA FE

CITY OF ALBUQUERQUE
PUBLIC WORKS DEPARTMENT
ENGINEERING DEVELOPMENT GROUP

TRAFFIC SIGNAL
METER PEDESTAL DETAILS FOR SIGNALS

DESIGN REVIEW COMMITTEE | CITY ENGINEER APPROVAL | LAST DESIGN UPDATE | MO./DAY/YR. | MO./DAY/YR.

CITY PROJECT NO.	ZONE MAP NO.	SHEET	OF
562181	E-22	34	36

ABMTSGS.DWG

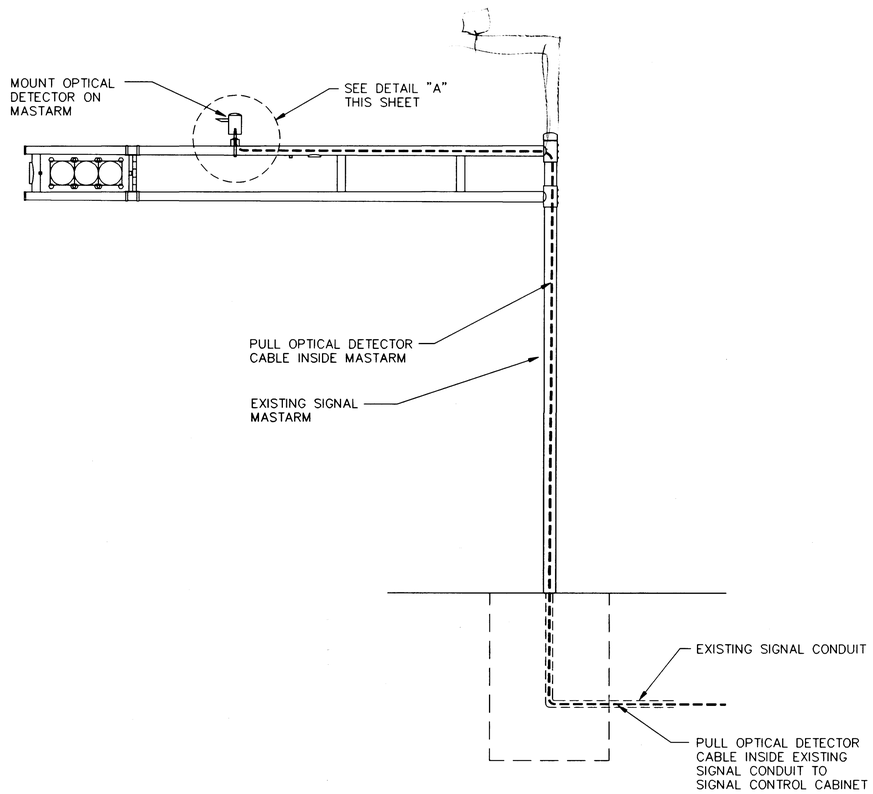

TYPICAL OPTICAL DETETOR INSTALLATION – MASTARM

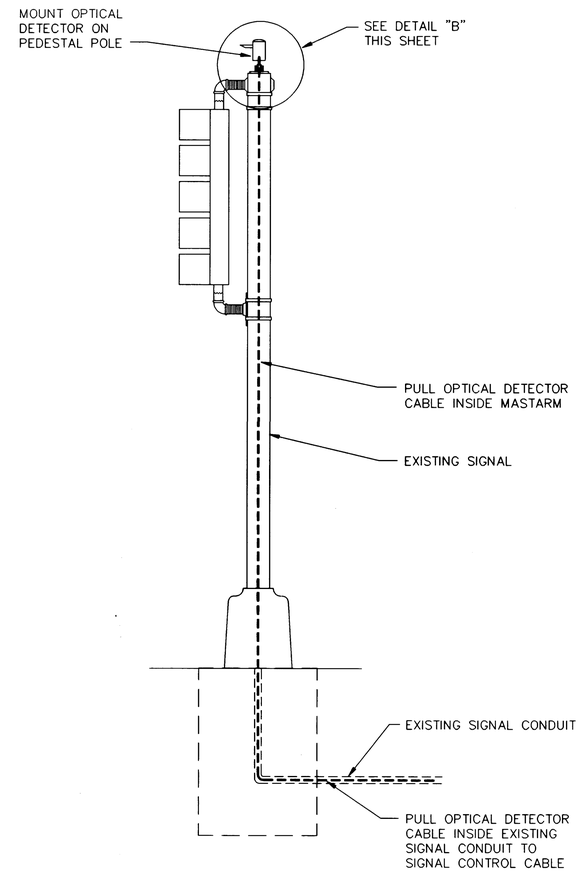

TYPICAL OPTICAL DETECTOR INSTALLATION – PEDESTAL POLE

NOTE: OPTICAL DETECTOR SHALL ONLY BE MOUNTED ON PEDESTAL POLES WHEN THERE IS NO MASTARM.

NOTES:

1. ALL OPTICAL DETECTOR MOUNTING HARDWARE SHALL CONFORM TO OPTICAL DETECTOR MANUFACTURER'S REQUIREMENTS.

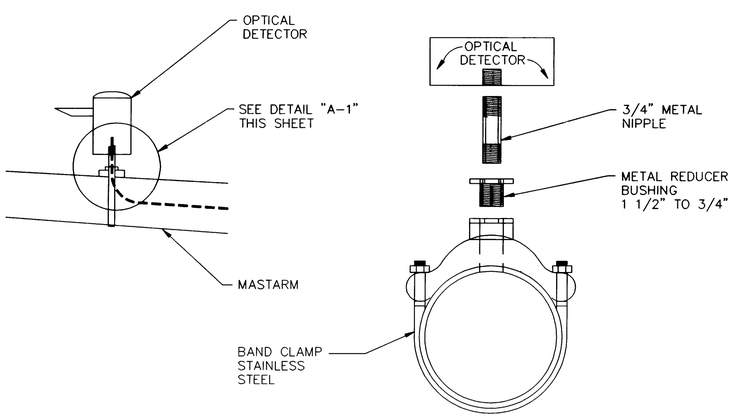

DETAIL "A-1"

OPTICAL DETECTOR MOUNTING – DETAIL "A"

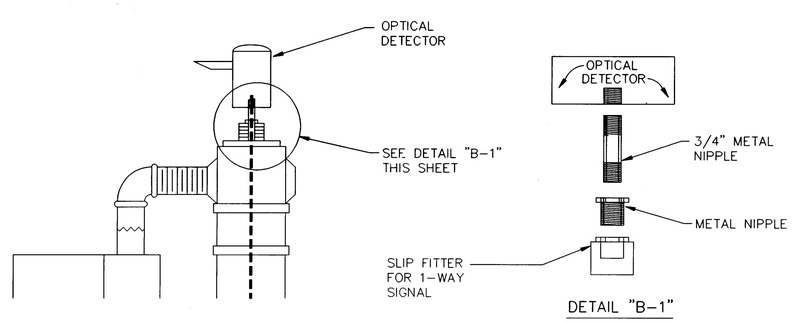

DETAIL "B-1"

OPTICAL DETECTOR MOUNTING – DETAIL "B"

RECORD DRAWING
DATE: 11-19-97

AS-BUILT INFORMATION

CONTRACTOR	Jaynes Corp	DATE 10/97
STAKED BY	BH	DATE 10/97
INSPECTOR'S ACCEPTANCE BY	BH	DATE 10/97
FIELD VERIFICATION BY	BH	DATE 10/97
DRAWINGS CORRECTED BY	BH	DATE 10/97

MICRO-FILM INFORMATION

RECORDED BY	DATE	NO.

BENCH MARKS

SURVEY INFORMATION

FIELD NOTES		
NO.	BY	DATE

ENGINEER'S SEAL

4-28-97

NO.	DATE	REMARKS	BY
		REVISIONS	

DESIGN

DESIGNED BY BHI\COA	DATE 8-96	
DRAWN BY BHI\COA	DATE 8-96	
CHECKED BY BHI\COA	DATE 8-96	

BOHANNAN-HUSTON INC.
ENGINEERS • PLANNERS • PHOTOGRAMMETRISTS • SURVEYORS • LANDSCAPE • ARCHITECTS
ALBUQUERQUE LAS CRUCES SANTA FE

CITY OF ALBUQUERQUE
PUBLIC WORKS DEPARTMENT
ENGINEERING DEVELOPMENT GROUP

TRAFFIC SIGNAL
OPTICAL DETECTOR INSTALLATION DETAILS

DESIGN REVIEW COMMITTEE | CITY ENGINEER APPROVAL | LAST DESIGN UPDATE | MO./DAY/YR. | MO./DAY/YR.

CITY PROJECT NO.	ZONE MAP NO.	SHEET	OF
562181	E-22	35	56

A:EOPTA.DWG

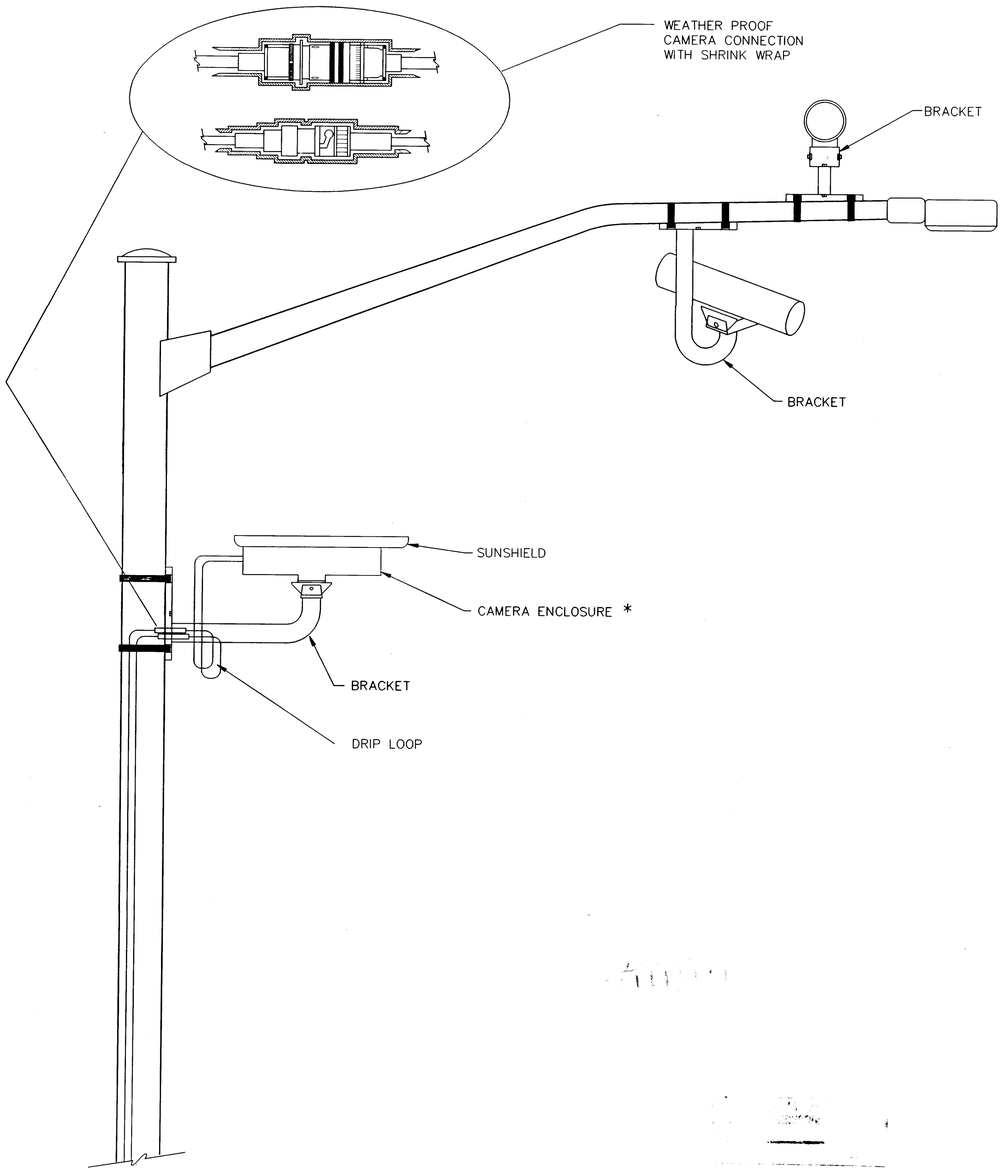

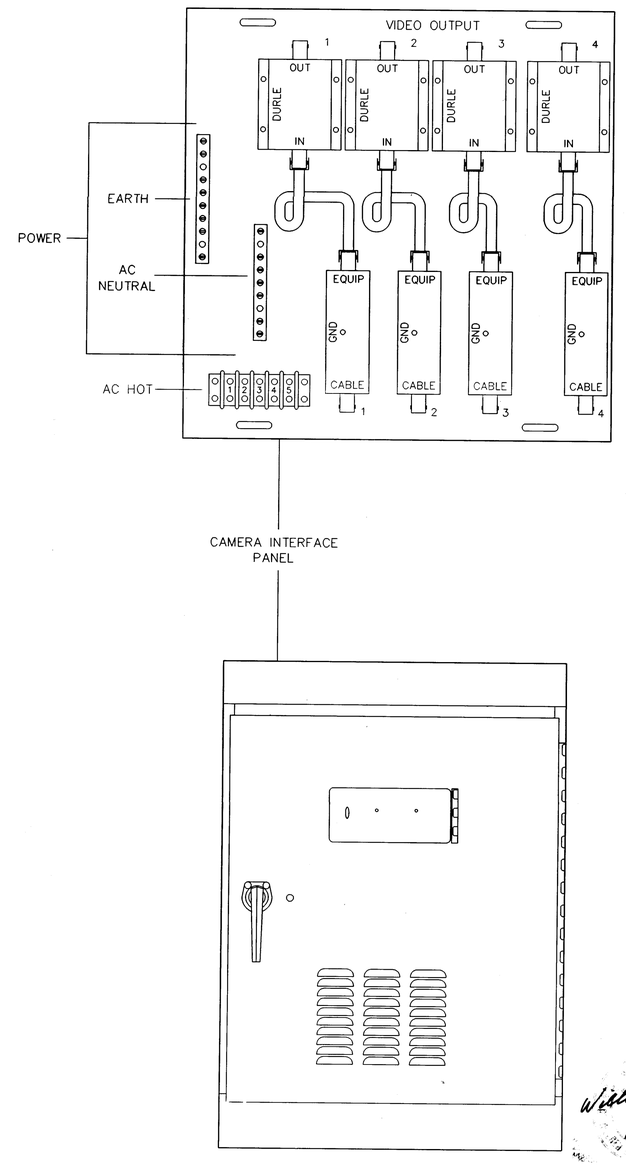

* CAMERA SHALL BE ROTATED INSIDE THE ENCLOSURE AFTER INSTALLATION, TO ALIGN HORIZON AT HORIZONTAL PLANE.

RECORD DRAWING
DATE: 11-19-97

SCANNED BY
BY LASON

AS-BUILT INFORMATION
CONTRACTOR Jaynes Corp DATE 10/97
WORK STAKED BY BH DATE 10/97
INSPECTOR'S ACCEPTANCE BY BH DATE 10/97
FIELD VERIFICATION BY BH DATE 10/97
DRAWINGS CORRECTED BY BH DATE 10/97
MICRO-FILM INFORMATION
RECORDED BY DATE
NO.

BENCH MARKS

SURVEY INFORMATION
FIELD NOTES
NO. BY DATE

ENGINEER'S SEAL
4-28-97

NO.	DATE	REMARKS	BY
		REVISIONS	
		DESIGN	
		DESIGNED BY BHI\COA	DATE 3-97
		DRAWN BY BHI\COA	DATE 3-97
		CHECKED BY BHI\COA	DATE 3-97

BOHANNAN-HUSTON INC.
ENGINEERS • PLANNERS • PHOTOGRAMMETRISTS • SURVEYORS • LANDSCAPE ARCHITECTS
ALBUQUERQUE LAS CRUCES SANTA FE

CITY OF ALBUQUERQUE
PUBLIC WORKS DEPARTMENT
ENGINEERING DEVELOPMENT GROUP

TRAFFIC SIGNAL
MACHINE VISION VEHICLE DETECTOR SYSTEMS

ASSISTANT DIRECTOR APPROVED
DESIGN REVIEW COMMITTEE
CITY ENGINEER APPROVAL
LAST DESIGN UPDATE MO./DAY/YR. MO./DAY/YR.

CITY PROJECT NO.	ZONE MAP NO.	SHEET	OF
562181	E-22	36	36

TRAN2\[T962\38A221\SHEETS\SIGNAL]MBEMACVS.DWG