PLANS FOR CONSTRUCTION OF

SUNPORT PARK

ALBUQUERQUE, NEW MEXICO

APRIL, 1998

INDEX TO DRAWINGS

SHEET	TITLE
1	COVER SHEET
2,2a	PLAT
3	LAYOUT SHEET
4	GRADING PLAN (EAST PORTION)
5	GRADING PLAN (WEST PORTION)
6	AIRCRAFT AVE & TRANSPORT ST. NE STREET PAVING PLAN & PROFILE
7	AIRCRAFT AVE WATERLINE PLAN & PROFILE
8	TRANSPORT ST WATERLINE PLAN & PROFILE
9	SANITARY SEWER – LINE "A" PLAN & PROFILE
10	PRIVATE STORM DRAIN LINE "A" – "D" PLAN & PROFILE
11	PRIVATE STORM DRAIN LINE "E" PLAN & PROFILE
12	MISCELLANEOUS DETAILS
13	MISCELLLANEOUS DETAILS
14	TRAFFIC SIGNAL – NOTES & LEGEND
15	AIRCRAFT/UNIVERSITY SIGNAL INSTALLATION, SIGNING & STRIPING PLAN
16	TRAFFIC SIGNAL – CABLES & CONDUITS
17	TRAFFIC SIGNAL – FUNCTIONS & DETECTORS
18	TRAFFIC SIGNAL – MASTARM DETAILS– TYPE III STANDARD
19	TRAFFIC SIGNAL – TYPE III STANDARD – MISCELLANEOUS DETAILS
20	TRAFFIC SIGNAL – MISCELLANEOUS DETAILS
21	TRAFFIC SIGNAL – FOUNDATION DETAILS – TYPE II & III STANDARDS
22	TRAFFIC SIGNAL – MACHINE VISION VEHICLE DETECTOR SYSTEM
23	TRAFFIC CONTROL PLAN
24	TRAFFIC CONTROL PLAN
25	GRADING PLAN AS-BUILT (WEST PORTION)
26	GRADING PLAN AS-BUILT (EAST PORTION)

APPROVAL OF AS BUILT DRAWINGS
CHIEF CONSTRUCTION ENGINEER
Glen Chang
DATE 12/1/99

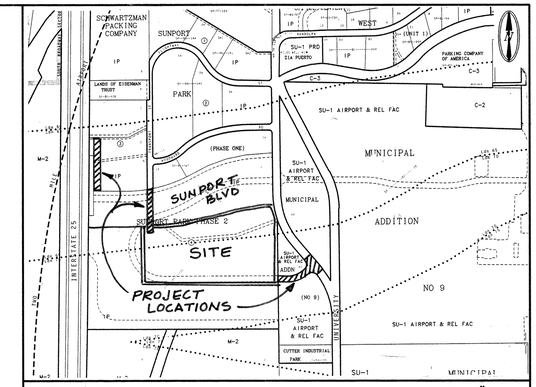

VICINITY MAP: M-15 SCALE: 1"=750'

GENERAL NOTES:

1. ALL WORK DETAILED ON THESE PLANS TO BE PERFORMED UNDER CONTRACT SHALL, EXCEPT AS OTHERWISE STATED OR PROVIDED FOR HEREON, BE CONSTRUCTED IN ACCORDANCE WITH THE "CITY OF ALBUQUERQUE, STANDARD SPECIFICATIONS FOR PUBLIC WORKS CONSTRUCTION, 1986" (COA STND). THROUGH UPDATE NO 6.
2. TWO (2) WORKING DAYS PRIOR TO ANY EXCAVATION, CONTRACTOR MUST CONTACT NEW MEXICO ONE CALL SYSTEM, 260–1990, FOR LOCATION OF EXISTING UTILI–TIES.
3. PRIOR TO CONSTRUCTION, THE CONTRACTOR SHALL EXCAVATE AND VERIFY THE HORIZONTAL AND VERTICAL LOCATIONS OF ALL OBSTRUCTIONS. SHOULD A CONFLICT EXIST, THE CONTRACTOR SHALL NOTIFY THE ENGINEER OR SURVEYOR SO THAT THE CONFLICT CAN BE RESOLVED WITH MINIMUM AMOUNT OF DELAY.
4. IF ANY UTILITY LINES, PIPELINES, OR UNDERGROUND UTILITY LINES ARE SHOWN ON THESE DRAWINGS, THEY ARE SHOWN IN AN APPROXIMATE MANNER ONLY, AND SUCH LINES MAY EXIST WHERE NONE ARE SHOWN. IF ANY SUCH EXISTING LINES ARE SHOWN, THE LOCATION IS BASED UPON INFORMATION PROVIDED BY THE OWNER OF SAID UTILITY, AND THE INFORMATION MAY BE INCOMPLETE, OR MAY BE OBSOLETE BY THE TIME CONSTRUCTION COMMENCES. THE ENGINEER HAS UNDERTAKEN NO FIELD VERIFICATION OF THE LOCATION, DEPTH, SIZE, OR TYPE OF EXISTING UTILITY LINES, PIPELINES, OR UNDERGROUND UTILITY LINES. THE CONTRACTOR SHALL INFORM HIMSELF OF THE LOCATION OF ANY UTILITY LINE, PIPELINE, OR UNDERGROUND UTILITY LINE IN OR NEAR THE AREA OF THE WORK IN ADVANCE OF AND DURING EXCAVATION WORK. THE CONTRACTOR IS FULLY RESPONSIBLE FOR ANY AND ALL DAMAGE CAUSED BY HIS FAILURE TO LOCATE, IDENTIFY AND PRESERVE ANY AND ALL EXISTING UTILITIES, PIPE–LINES, AND UNDERGROUND UTILITY LINES. IN PLANNING AND CONDUCTING EXCAVATION, THE CONTRACTOR SHALL COMPLY WITH STATE STATUTES, MUNICIPAL AND LOCAL ORDINANCES, RULES AND REGULATIONS, IF ANY, PERTAINING TO THE LOCATION OF THESE LINES AND FACILITIES.
5. THE CONTRACTOR SHALL SECURE A "TOPSOIL DISTURBANCE PERMIT" PRIOR TO BEGINNING CONSTRUCTION.
6. THE CONTRACTOR SHALL ASSIST THE ENGINEER/INSPECTOR IN THE RECORDING OF DATA ON ALL UTILITY LINES AND ACCESSORIES AS REQUIRED BY THE OWNERS FOR THE PREPARATION OF "RECORD DRAWINGS". THE CONTRACTOR SHALL NOT COVER UTILITY LINES AND ACCESSORIES UNTIL ALL DATA HAS BEEN RECORDED.
7. REFERENCE MADE TO STANDARD DRAWINGS REFER TO ALBUQUERQUE STANDARD DRAWINGS.
8. ELECTRONIC MARKER DISCS SHALL BE PLACED IN ACCORDANCE WITH SECTION 170 OF THE CITY OF ALBUQUERQUE, STANDARD SPECIFICATIONS, PUBLIC WORKS CONSTRUCTION.
9. WATERLINE CONNECTIONS SHALL BE CONSTRUCTED IN ACCORDANCE WITH CITY STD. DWG. 2301.
10. WATER METERS ARE TO BE INSTALLED AT ALL SERVICES IN ACCORDANCE WITH CITY STD. DWG. 2362 AND 2363.
11. ALL CONSTRUCTION WITHIN CITY RIGHT–OF–WAY OR EASEMENTS MUST BE DONE FROM APPROVED WORK ORDER DOCUMENTS FROM THE CITY OF ALBUQUERQUE AND PREPARED BY BRASHER & LORENZ, INC.
12. AN EXCAVATION/CONSTRUCTION PERMIT WILL BE REQUIRED BEFORE BEGINNING ANY WORK WITHIN CITY RIGHT–OF–WAY. AN APPROVED COPY OF THESE PLANS MUST BE SUBMITTED AT THE TIME OF APPLICATION FOR THIS PERMIT.
13. THE CONTRACTOR SHALL BE RESPONSIBLE FOR DETERMINING, IN ADVANCE OF HIS CONSTRUCTION, IF OVERHEAD UTILITY LINES SUPPORT STRUCTURES, POLES, GUYS, ETC. ARE AN OBSTRUCTION TO CONSTRUCTION OPERATIONS. IF ANY OBSTRUCTION TO CONSTRUCTION OPERATIONS IS EVIDENT, THE CONTRACTOR SHALL BE RESPONSIBLE FOR COORDINATING WITH THE APPROPRIATE UTILITY OWNER TO REMOVE OR SUPPORT THE UTILITY OBSTRUCTION. ANY COST ASSOCIATED WITH THIS EFFORT SHALL BE THE RESPONSIBILITY OF THE CONTRACTOR
14. CONTRACTOR IS TO SUPPORT AND MAINTAIN THE INTEGRITY OF ALL UNDERGROUND TELEPHONE, ELECTRIC CABLES, AND CABLE TELEVISION UTILITIES AT NO ADDITIONAL COST TO THE OWNER. CABLE IS TO BE SUPPORTED EVERY 15' (MINIMUM). CONTRACTOR SHALL COORDINATE WITH AND MAKE NECESSARY PAYMENT (IF ANY) TO UTILITY OWNER FOR DE–ENERGIZATION OF CABLES OR SUPPORT OF CABLES BY THE UTILITY OWNER.
15. FIVE (5) WORKING DAYS PRIOR TO BEGINNING CONSTRUCTION THE CONTRACTOR SHALL SUBMIT TO THE CONSTRUCTION COORDINATION DIVISION A DETAILED CONSTRUCTION SCHEDULE. TWO (2) WORKING DAYS PRIOR TO CONSTRUCTION THE CONTRACTOR SHALL OBTAIN A BARRICADING PERMIT FROM TH CONSTRUCTION COORDINATION DIVISION. THE CONTRACTOR SHALL NOTIFY THE BARRICADE ENGINEER (768–2551) PRIOR TO OCCUPYING AN INTERSECITON. SEE SECTION 19 OF THE SPECIFICATIONS.
16. ALL STREET STRIPING ALTERED OR DESTROYED SHALL BE REPLACED WITH PLASTIC REFLECTORIZED PAVEMENT MARKINGS BY THE CONTRACTOR TO LOCATION AS EXISTING OR AS INDICATED ON THE PLANSET.
17. ANY WORK OCCURRING IN AN ARTERIAL ROADWAY REQUIRES TWENTY–FOUR (24) HOUR CONSTRUCTION.

THESE DRAWINGS HAVE BEEN REVISED BASED ON FIELD DATA AND EVERY REASONABLE ATTEMPT HAS BEEN MADE TO DEPICT CONSTRUCTION AS ACTUALLY PERFORMED. PLEASE SEE SHEETS 25 AND 26.

Aug 11, 1999
(GEORGE L. MARTINEZ, JR., NMPS 10283 / DATE)
GEORGE L. MARTINEZ, JR. NEW MEXICO 10283 REGISTERED PROFESSIONAL SURVEYOR

THESE DRAWINGS DO NOT INCLUDE NECESSARY COMPONENTS FOR THE CONSTRUCTION SAFETY WHICH SHALL REMAIN THE RESPONSIBILITY OF THE CONTRACTOR.

DRB 97-68

BL BRASHER & LORENZ, INC.
Consulting Engineers
2201 San Pedro NE Building 1 Suite 210
Albuquerque, New Mexico 87110
Ph: 505-888-6088 Fax: 505-888-6188

REV.	SHEETS	CITY ENGINEER	DATE	USER DEPARTMENT	DATE	USER DEPARTMENT	DATE

ENGINEERS STAMP & SIGNATURE

DENNIS A. LORENZ NEW MEXICO 9847 REGISTERED PROFESSIONAL ENGINEER
5-15-98

APPROVALS	ENGINEER	DATE
DRC Chairman		7-29-98
Transportation		5-28-98
Water/Wastewater	R.V. Kane	5-27-98
Hydrology		6-30-98
CIP		
Constr. Mngmt.		
Constr. Coord.		6-3-98

****

APPROVED FOR CONSTRUCTION

City Engineer Date 9/10/99

CITY PROJECT NO. 5651.82

SHEET 1 OF 26 24

6039-COV.DWG 4/15/98 1"=1'

96C-22(1)

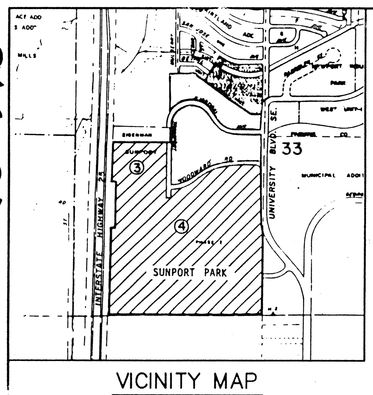

VICINITY MAP

ZONE ATLAS MAP NO. M-15
SCALE: 1"=1000'

GENERAL NOTES

1. Boundary is tied to New Mexico State Plane Coordinate System as shown.
2. Basis of bearings are grid bearing.
3. Distances shown are ground distances.
4. Found property corners are shown thus ⊕.
5. Set property corners shown thus are marked by a #5 iron rebar with a yellow plastic cap stamped "P.S. 4071 AA&R."
6. Bearings shown in parenthesis are recorded bearings. All other bearings shown are field bearings.

REFERENCE DOCUMENTS

1. Plat of Parcels 1A & 1B in Block 4 Sunport Park, Filed May 22, 1991; Volume 91C, Folio 101.
2. Replat of Sunport Park filed January 27, 1989; Volume C38, Folio 102.
3. Subdivision plat for Sunport Park, filed July 22, 1986; Vol. C31, Fol 15.
4. Replat of Tract A Municipal Addition No. 9, filed 6/12/86, Vol. C30, Fol. 146.
5. N.M.S.H.C. right-of-way map, Project No. 1-1G-025-4(14)217.

PURPOSE OF THIS PLAT

To create LOTS 1A, 1B, 2A & 2B, Block 3; Parcels 1-A-1, 1-A-2, & 1-B-1, Block 4, Parcels 2A, 2B, 2C & 2D, and Easements, in accordance with Settlement Agreement between NMSH&TD, City of Albuquerque and Sunport Joint Venture dated November 10, 1995.

FREE CONSENT STATEMENT

The plat as shown hereon with the free consent of, and in accordance with the wishes and desires of the undersigned owners and/or proprietors thereof, and said owners and/or proprietors do hereby acknowledge all applicable utility easements shown hereon for the common and joint use of gas, electrical power and communication services for buried distribution lines, conduits, and pipes for underground round utilities where shown or indicated, and including the right of ingress and egress for construction and maintenance, and the right to trim interfering trees and shrubs. Said owners and/or proprietors do hereby acknowledge that Sunport Blvd. access is limited to the interchanges at University Blvd. and Interstate 25. Said owners and/or proprietors do hereby consent to all of the foregoing and do hereby certify that we are authorized to so act. And does Grant Easements As Shown.

THE SUNPORT JOINT VENTURE – Lots 1 & 2, Block 3, and Parcels 1-B & 2, Block 4.

BY: J. Howard Mock
J. Howard Mock – Managing Partner

ACKNOWLEGEMENT
STATE OF NEW MEXICO)
)SS
COUNTY OF BERNALILLO)

The foregoing instrument was acknowledged before me this 14 day of December, 1995, by J. Howard Mock.

NOTARY PUBLIC Dianne Schilaberta

My commission expires: 12/7/97

ALDO M. P. VAIO – PARCEL 1-A, BLOCK 4

BY: Aldo M. P. Vaio

ACKNOWLEGEMENT
STATE OF NEW MEXICO)
)SS
COUNTY OF BERNALILLO)

The foregoing instrument was acknowledged before me this 14 day of December, 1995, by Aldo M. P. Vaio.

NOTARY PUBLIC Dianne Schilaberta

My commission expires: 12/7/97

TALOS LOG NO. 951213111160250

LEGAL DESCRIPTION

A certain tract, of land situate within the West one-half (W 1/2) of Section 33, Township 10 North, Range 3 East, N.M.P.M., in the City of Albuquerque, Bernalillo County, New Mexico, being and comprising Lots 1 and 2 of Block Three (3) and Parcels 1-A and 2 of Block Four (4) of Sunport Park, as filed in the office of the County Clerk of Bernalillo County, New Mexico on January 27, 1989, in Volume C38, Folio 102; and being more particularly described as follows:

Beginning at the Southwest Corner of said parcel Two (2), said point being on the easterly right-of-way of Interstate 25 (I-25), from whence the N.M.S.H.C. brass cap "I-25-31" bears S 03°37'51" W, a distance of 1,318.77 feet; thence,

N 01°31'08" E, along the Easterly right-of-way of I-25, a distance of 1199.38 feet to a N.M.S.H.C. brass cap; thence,

S 89°38'22" E, along the Easterly right-of-way of I-25, a distance of 52.62 feet to a N.M.S.H.C. brass cap; thence,

N 00°22'59" E, along the Easterly right-of-way of I-25, a distance of 629.03 feet to a point; thence,

N 88°56'52" W, along the easterly right-of-way of I-25, a distance of 45.27 feet to a point; thence

N 01°03'08" E, along the Easterly right-of-way of I-25, a distance of 565.49 feet to a point, said point being the Northwest corner of Lot 2, Block 3; thence,

S 89°28'29" E, a distance of 598.06 feet to a point on the Westerly right-of-way of Transport Street S.E.; thence,

S 00°07'31" W, along the Westerly right-of-way of Transport Street S.E, a distance of 924.10 feet to a point on a curve of the Northerly property line of Parcel 2; thence,

Northeasterly along the arc of a curve having a radius of 1400.00 feet, a central angle of 02°29'41", a distance of 60.96 feet to the left, and a long chord which bears N 79°57'54"E, 60.96 feet to a point; thence

N 00°07'31" E, a distance of 226.10 feet along the Easterly right-of-way line of Transport Street S.E. to a point of curvature; thence,

Northeasterly along the arc of a curve having a radius of 30.00 feet, a central angle of 90°00'00", a distance of 47.12 feet to the right and a long chord which bears N 45°07'31", 42.43 feet to a point of reverse curvature on the Southerly right-of-way of Woodward Road S.E.; thence,

Northeasterly on the Southerly right-of-way of Woodward Road S.E., along the arc of a curve having a radius of 430.00 feet, a central angle of 41°59'31", a distance of 315.15 feet to the left, and a long chord which bears N 69°07'45"E, 308.14 feet to a point of reverse curvature; thence,

Northeasterly on the Southerly right-of-way of Woodward Road S.E., along the arc of a curve having a radius of 770.00 feet, a central angle of 25°35'54", a distance of 344.02 feet to the right, and a long chord which bears N 80°55'57" E, a distance of 341.16 feet to a point of compound curvature; thence,

Northeasterly on the Southerly right-of-way of Woodward Road S.E., along the arc of a curve having a radius of 1418.00 feet, a central angle of 15°58'41", a distance of 395.43 feet to the right, and a long chord which bears N 81°43'14"E, a distance of 394.15 feet to a point of tangency; thence,

N 89°42'36" E, along the Southerly right-of-way of Woodward Road S.E., a distance of 216.87 feet to a point of curvature; thence,

Southeasterly along the arc of a curve having a radius of 30.00 feet, a central angle of 90°00'00, a distance of 47.12 feet to the right, and a long chord which bears S 45°17'24" E, a distance of 42.43 feet to a point of tangency on the Westerly right-of-way of University Boulevard S.E.; thence,

S 00°17'24" E, along the Westerly right-of-way of University Boulevard S.E., a distance of 828.86 feet to a point of curvature; thence,

Southeasterly along the Westerly right-of-way of University Boulevard S.E., on the arc of a curve having a radius of 843.00 feet, a central angle of 18°22'44", a distance of 270.41 feet to the left, and a long chord which bears S 09°28'46" E, a distance of 269.25 feet to a point; thence,

S 00°17'24"E, a distance of 1154.11 feet to a point, salpoint being the Southeast corner of Parcel 2, Block 4; thence,

N 89°39'45" W, a distance of 2007.14 feet to the point of beginning.

The parcel herein described contains 4,057,550 square feet (93.2189 acres) more or less.

NOTICE OF SUBDIVISION PLAT CONDITIONS FOR PARCEL 2A

Pursuant to Section 7 of the City of Albuquerque Subdivision Ordinance, a variance or waiver from certain subdivision requirements has been granted by the City and the Albuquerque Metropolitan Arroyo Flood Control Authority in connection with this plat.

Future subdivision of lands within this plat, zoning site development plan approvals, and development permits may be conditioned upon dedication of rights-of-way and easement, and/or sewer, streets, drainage, grading and parks in accordance with current resolutions, ordinances and policies in effect at the time for any specific proposal.

The City (and AMAFCA with reference to drainage) may require and/or permit easements to be added, modified or removed when future plats and/or site development plans are approved.

By its approval of this subdivision, the city makes no representation or warranties as to availability of utilities, or final approval of all requirements including (but not limited to) the following items: improvements; park and open space requirements; drainage requirements and/or improvements; and excavation, filling or grading requirements. Any person intending development of lands within this subdivision is cautioned to investigate the status of these items.

A separate notice of these conditions is recorded with the County Clerk on 1-18, 1996 in Book 96-2, Page 3139.

OFFICIAL SEAL
RUBIN PHILLIPS
NOTARY PUBLIC
STATE OF NEW MEXICO
My Commission Expires 8-9-97

PNM EASEMENT RELEASE APPROVAL

Public Service Company of New Mexico does hereby release, waive, quitclaim and discharge its right, title and interest in the easement (granted by prior plat, replat or document) shown to be vacated on this plat.

PUBLIC SERVICE COMPANY OF NEW MEXICO
By: Rub Phillips

STATE OF NEW MEXICO)
)SS
COUNTY OF BERNALILLO)

The foregoing instrument was acknowledged before me this 10th day of January 1996, by Rub Roberts of the Public Service Company of New Mexico, a New Mexico corporation, on behalf of said corporation.

Notary Public: Rub Phillips

My Commission expires: 8-9-97

U.S. WEST COMMUNICATIONS QUITCLAIM

KNOW ALL MEN BY THESE PRESENTS: that U.S. WEST COMMUNICATIONS, INC., a Colorado Corporation, hereinafter called "Company" for and in consideration of One Dollar ($1.00) and other good and valuable considerations in hand paid, receipt whereof is hereby confessed and acknowledged, does hereby release, remise and quitclaim all the right, title and interest in the easements shown to be vacated on this plat and hereby expressly excepting and reserving to the Company, any and all interest otherwise acquired in said property, except as shown to be vacated.

IN WITNESS WHEREOF, the Company has caused these presents to be executed by its duly authorized office this 11th day of January, 1996.

U.S. WEST COMMUNICATIONS, INC.
BY: James Villegas

STATE OF NEW MEXICO)
)SS
COUNTY OF BERNALILLO)

The foregoing instrument was acknowledged before me this 11th day of January, 1996 by James Villegas of the Manager/Network and Technology Services of U.S. West Communications, Inc., a Colorado Corporation, on behalf of the Corporation.

Notary Public: Norma G Carrillo

My Commission expires: 2-6-99

OFFICIAL SEAL
NORMA G. CARRILLO
NOTARY PUBLIC
STATE OF NEW MEXICO
My Commission Expires 2-6-99

96006067

PLAT OF
LOTS 1A, 1B, 2A, & 2B IN BLOCK 3
PARCELS 1-A-1, 1-A-2, 1-B-1 IN BLOCK 4
PARCELS 2A, 2B, 2C & 2D
OF
SUNPORT PARK
ALBUQUERQUE, NEW MEXICO
BEING A REPLAT OF LOTS 1 AND 2, BLOCK 3
& PARCELS 1-A, 1-B & 2, BLOCK 4
DECEMBER, 1995

96006067

State of New Mexico } SS
County of Bernalillo
This instrument was filed for record on JAN 18 1996 at 2:10 o'clock p.m. Recorded in Vol 96C of records of Said County Folio 22
Linda D. Sandoval Clerk

APPROVALS

PUBLIC SERVICE CO. OF NEW MEXICO — Rub Phillips 1-10-96 — DATE
JONES INTERCABLE — Violet Hutton 1/10/96 — DATE
U.S. WEST COMMUNICATIONS — Norma S Carrillo 1-11-96 — DATE
GAS COMPANY OF NEW MEXICO — Joe Burlop 12-22-95 — DATE

PUBLIC UTILITY EASEMENTS

PUBLIC UTILITY EASEMENTS shown on this plat granted for the common and joint use of:

A. The Public Service Company of New Mexico for installation, maintenance, and service of overhead and underground electrical lines, transformers, and other equipment and related facilities reasonably necessary to provide electrical service.

B. U.S. West Communications for the installation, maintenance, and service of such lines, cable, and other related equipment and facilities reasonably necessary to provide communication services, including but not limited to ground pedestals and closures.

C. Gas Company of New Mexico for the installation, maintenance, and service of such lines, and other related equipment and facilities reasonably necessary to provide gas service.

D. Jones Intercable for the installation, maintenance, and service of such lines, and other related equipment and facilities reasonably necessary to provide Cable TV service.

Included is the right to build, rebuild, construct, reconstruct, locate, relocate, change, remove, modify, renew, operate, and maintain facilities for the purposes described above, together with free access to, from, and over said easements, including sufficient working area space for electric transformers, with the right and privilege to trim and remove trees, brush, and other vegetation, in the purposes set forth herein. No building, sign, pool (above-ground or subsurface), hot tub, permanent barbecue, or any other structure shall be erected or constructed on said easements, nor shall any well be drilled or operated thereon. Property owners shall be solely responsible for correcting any violations of National Electric Safety Code by construction of pools, decking, or any structures adjacent to or near easements shown on this plat.

THIS IS TO CERTIFY THAT TAXES ARE CURRENT AND PAID ON
UPC #
#1-015-055-093234-30210
#1-015-055-096176-30220
#1-015-055-146175-30306
#1-015-055-175095-30320
PROPERTY OWNER OF RECORD: SUNPORT JOINT VENTURE

BERNALILLO COUNTY TREASURER'S OFFICE:
Pamela Ortiz

APPROVALS

CITY SURVEYOR, CITY OF ALBUQUERQUE — John Fiala — 12-18-95 — DATE
PUBLIC WORKS DEPARTMENT
FOK
PROPERTY MANAGEMENT, CITY OF ALBUQUERQUE — 1-9-96 — DATE
TRAFFIC ENGINEER, CITY OF ALBUQUERQUE — 1-12-96 — DATE
PUBLIC WORKS DEPARTMENT
PARKS AND RECREATION DEPARTMENT, CITY OF ALBUQUERQUE — 1-2-96 — DATE
Acting Parks & Recreation
UTILITY DEVELOPMENT DIVISION, CITY OF ALBUQUERQUE — Robert W. Kane — 1-2-96 — DATE
PUBLIC WORKS DEPARTMENT
ALBUQUERQUE METROPOLITAN ARROYO FLOOD CONTROL AUTHORITY — 1-12-96 — DATE
CITY ENGINEER, CITY OF ALBUQUERQUE — 1-2-96 — DATE
PUBLIC WORKS DEPARTMENT
APPROVAL AS SPECIFIED BY THE ALBUQUERQUE SUBDIVISION ORDINANCE
CHAIRMAN, ALBUQUERQUE/BERNALILLO COUNTY DEVELOPMENT REVIEW BOARD — 1-12-96 — DATE

CASE No. DRB-95-510

PLAT No. SP-96-12

SURVEYOR'S CERTIFICATION

I, GAYLE D. JEWELL, A REGISTERED LAND SURVEYOR UNDER THE LAWS OF THE STATE OF NEW MEXICO, DO HEREBY CERTIFY THAT THIS PLAT WAS PREPARED BY ME OR UNDER MY SUPERVISION, SHOWS ALL EASEMENTS OF RECORD, MEETS THE MINIMUM REQUIREMENTS FOR MONUMENTATION AND SURVEYS OF THE ALBUQUERQUE SUBDIVISION ORDINANCE, AND IS TRUE AND CORRECT TO THE BEST OF MY KNOWLEDGE AND BELIEF.

GAYLE D. JEWELL N.M.P.L.S. No. 4071 — 12-13-95 — DATE

REGISTERED PROFESSIONAL LAND SURVEYOR — STATE OF NEW MEXICO — NO. 4071 — GAYLE JEWELL

ANDREWS, ASBURY & ROBERT, INC.
CONSULTING ENGINEERS
ALBUQUERQUE 85-415K NEW MEXICO

SHEET 1 OF 3

96C-22(2)

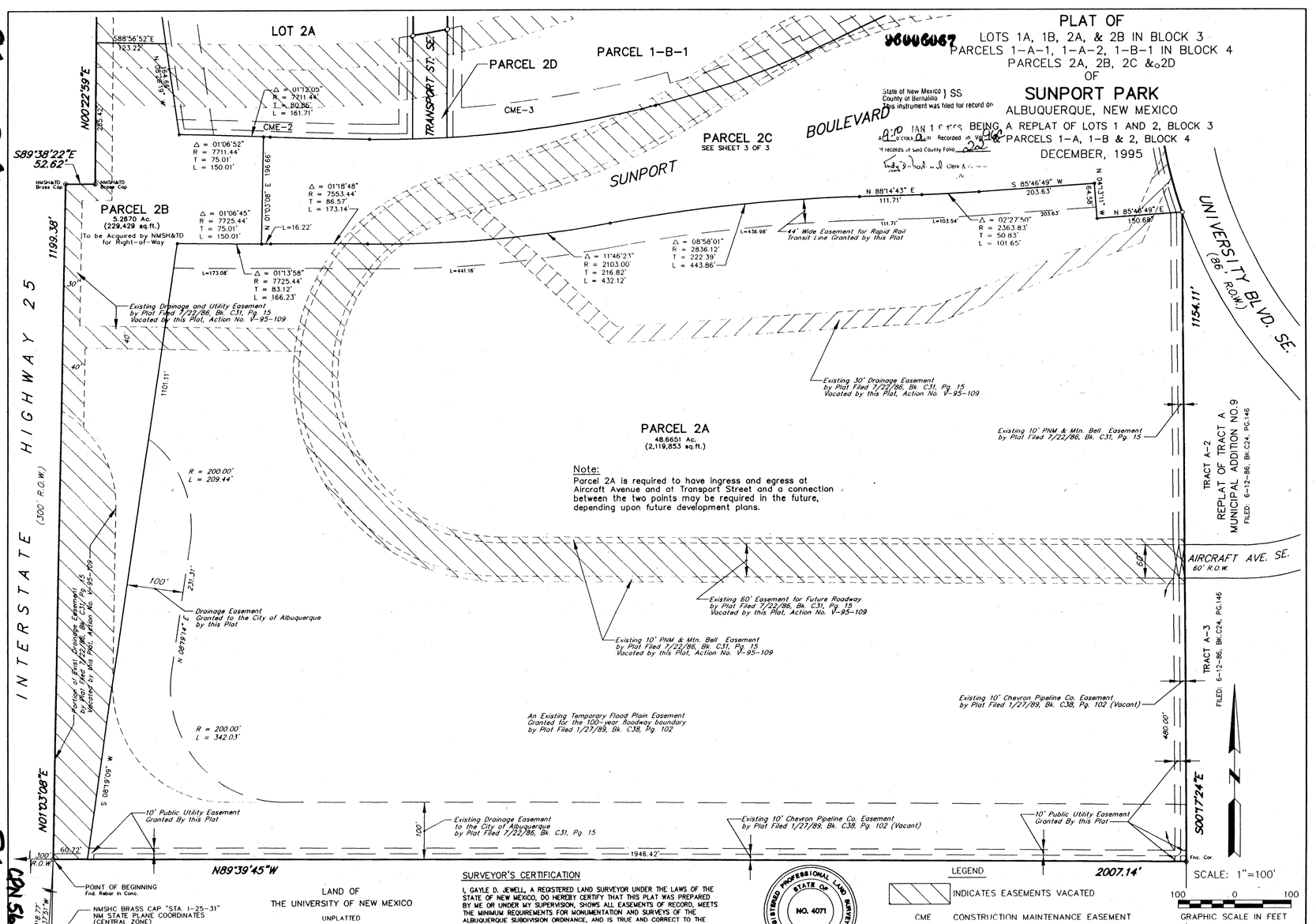

96006067

PLAT OF
LOTS 1A, 1B, 2A, & 2B IN BLOCK 3
PARCELS 1-A-1, 1-A-2, 1-B-1 IN BLOCK 4
PARCELS 2A, 2B, 2C &o2D
OF
SUNPORT PARK
ALBUQUERQUE, NEW MEXICO
BEING A REPLAT OF LOTS 1 AND 2, BLOCK 3
PARCELS 1-A, 1-B & 2, BLOCK 4
DECEMBER, 1995

State of New Mexico } SS
County of Bernalillo
This instrument was filed for record on JAN 18 1996 at 2:10 o'clock p.m. Recorded in Vol 96C of records of Said County Folio 22
Linda D. Sandoval Clerk

Note:
Parcel 2A is required to have ingress and egress at Aircraft Avenue and at Transport Street and a connection between the two points may be required in the future, depending upon future development plans.

SURVEYOR'S CERTIFICATION

I, GAYLE D. JEWELL, A REGISTERED LAND SURVEYOR UNDER THE LAWS OF THE STATE OF NEW MEXICO, DO HEREBY CERTIFY THAT THIS PLAT WAS PREPARED BY ME OR UNDER MY SUPERVISION, SHOWS ALL EASEMENTS OF RECORD, MEETS THE MINIMUM REQUIREMENTS FOR MONUMENTATION AND SURVEYS OF THE ALBUQUERQUE SUBDIVISION ORDINANCE, AND IS TRUE AND CORRECT TO THE BEST OF MY KNOWLEDGE AND BELIEF.

GAYLE D. JEWELL N.M.P.L.S. No. 4071 — 12-13-95 — DATE

REGISTERED PROFESSIONAL LAND SURVEYOR — STATE OF NEW MEXICO — NO. 4071 — GAYLE JEWELL

LEGEND
INDICATES EASEMENTS VACATED
CME CONSTRUCTION MAINTENANCE EASEMENT

ANDREWS, ASBURY & ROBERT, INC.
CONSULTING ENGINEERS
ALBUQUERQUE 85-415K NEW MEXICO

SHEET 2 OF 3

2 OF 2A 26

96C-22(3)

96C-22(3)

96006067

PLAT OF
LOTS 1A, 1B, 2A, & 2B IN BLOCK 3
PARCELS 1-A-1, 1-A-2, 1-B-1 IN BLOCK 4
PARCELS 2A, 2B, 2C & 2D
OF
SUNPORT PARK
ALBUQUERQUE, NEW MEXICO
BEING A REPLAT OF LOTS 1 AND 2, BLOCK 3
& PARCELS 1-A, 1-B & 2, BLOCK 4
DECEMBER, 1995

State of New Mexico } SS
County of Bernalillo }
This instrument was filed for record on
2010 JAN 1 P 1:09 96C
of records of Bernalillo County, New Mexico, in Book ___ Page 22
Clerk & Recorder

SURVEYOR'S CERTIFICATION

I, GAYLE D. JEWELL, A REGISTERED LAND SURVEYOR UNDER THE LAWS OF THE STATE OF NEW MEXICO, DO HEREBY CERTIFY THAT THIS PLAT WAS PREPARED BY ME OR UNDER MY SUPERVISION, SHOWS ALL EASEMENTS OF RECORD, MEETS THE MINIMUM REQUIREMENTS FOR MONUMENTATION AND SURVEYS OF THE ALBUQUERQUE SUBDIVISION ORDINANCE, AND IS TRUE AND CORRECT TO THE BEST OF MY KNOWLEDGE AND BELIEF.

Gayle D. Jewell 12-13-95
GAYLE D. JEWELL N.M.P.L.S. No. 4071 — DATE

REGISTERED PROFESSIONAL LAND SURVEYOR — STATE OF NEW MEXICO — NO. 4071 — GAYLE JEWELL

BOUNDARY CURVE DATA

1	Δ = 02°29'41"	R = 1400.00'	T = 30.49'	L = 60.96'	Ch=N79°57'54"E 60.96'
2	Δ = 90°00'00"	R = 30.00'	T = 30.00'	L = 47.12'	Ch=N45°07'31"E 42.43'
3	Δ = 41°59'31"	R = 430.00'	T = 165.03'	L = 315.15'	Ch=N69°07'45"E 308.14'
4	Δ = 25°35'54"	R = 770.00'	T = 174.93'	L = 344.02'	Ch=N60°55'57"E 341.16'
5	Δ = 15°58'41"	R = 1418.00'	T = 199.01'	L = 395.43'	Ch=N81°43'14"E 394.15'
6	Δ = 90°00'00"	R = 30.00'	T = 30.00'	L = 47.12'	Ch=S45°17'24"E 42.43'
7	Δ = 18°22'44"	R = 843.00'	T = 136.38'	L = 270.41'	Ch=S09°28'46"E 269.25'

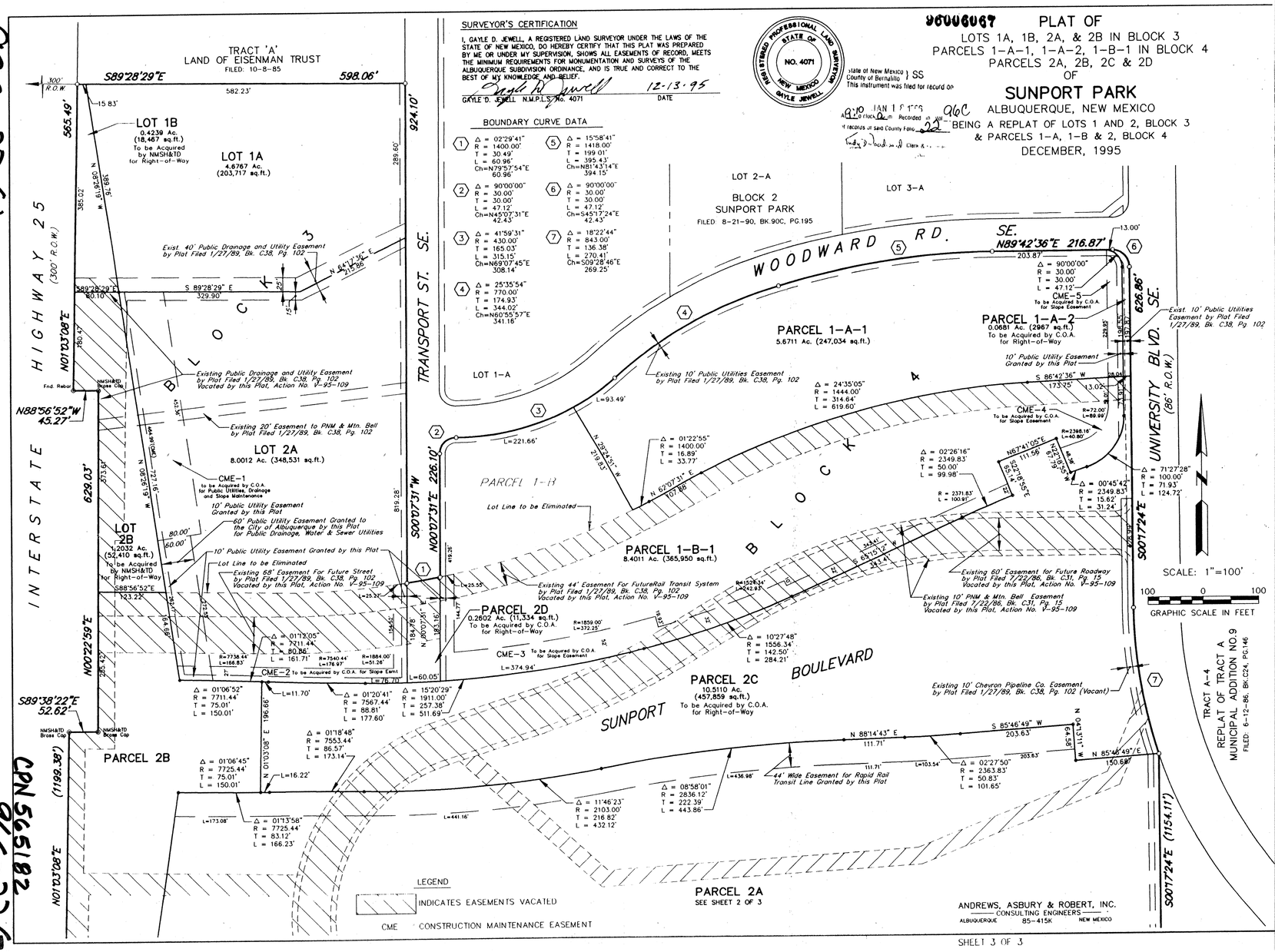

2a of 2426

CPN 565182

96C-22(3)

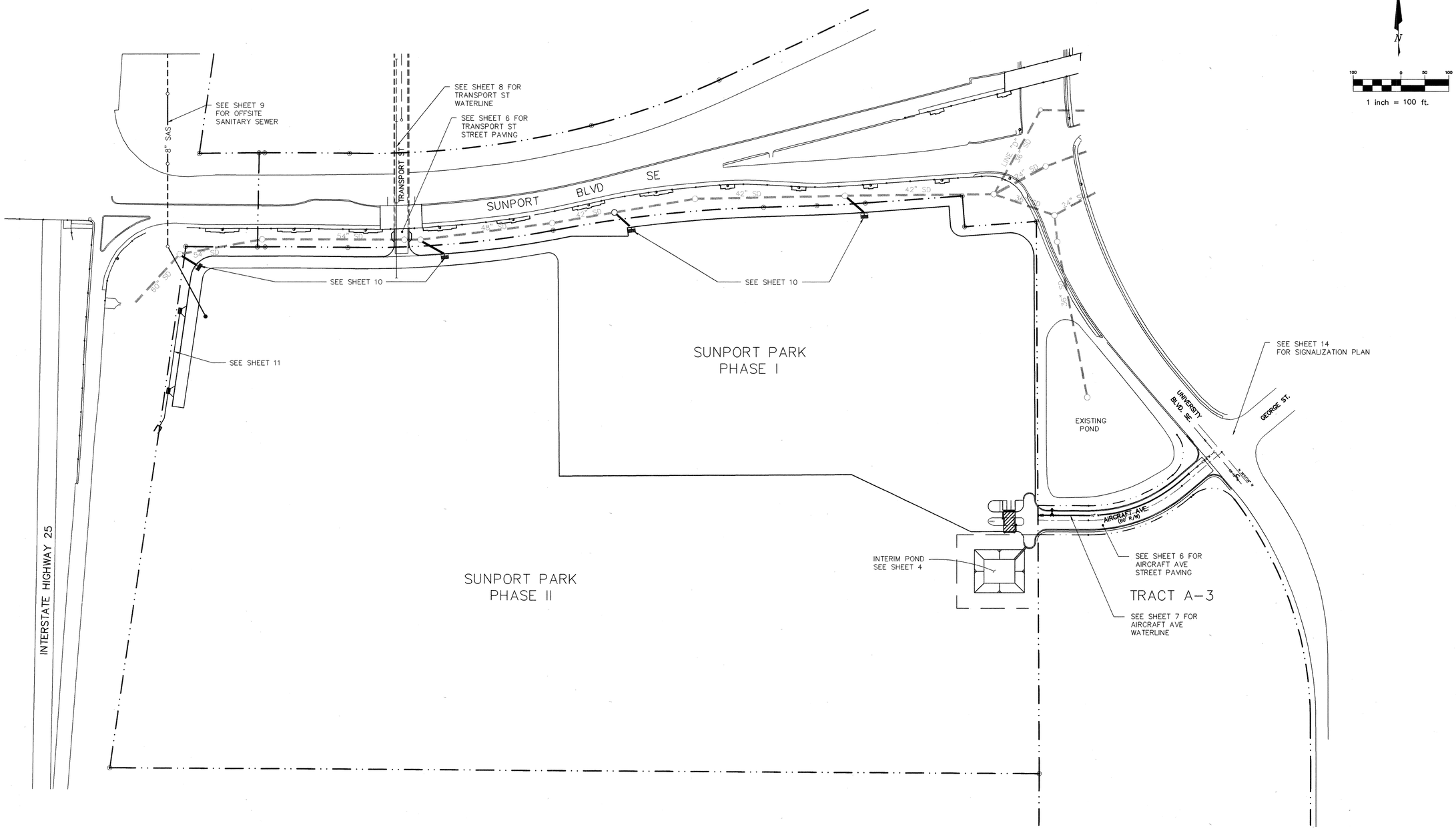

AS BUILT INFORMATION

CONTRACTOR WORK STAKED BY MARQUEZ SURVEYING CO. INC DATE 4-1999
INSPECTOR'S FIELD CHANGES BY Clay Smith DATE 11/1999
VERIFICATION BY MARQUEZ SURVEYING CO. INC. DATE 6-22-99
AS BUILTS REVIEWED CORRECTED BY MARQUEZ SURVEYING CO. INC DATE 8-10-99
MICRO-FILM INFORMATION
RECORDED BY DATE
NO.

BENCH MARKS

ACS BRASS TABLET (CASTINGS: "LIMBAUGH ENGINEERS INC. STAMPED HV-14 RESET 1974 ACS") SET IN TOP OF A CONCRETE POST FLUSH WITH THE GROUND, LOCATED ABOUT 350 FT SOUTH OF VIEWPOINT ROAD, 0.15 MILES WEST OF YALE BLVD.
ELEVATION= 5259.9

SURVEY INFORMATION

FIELD NOTES

NO.	BY	DATE

ENGINEER'S SEAL

DENNIS A. LORENZ NEW MEXICO REGISTERED PROFESSIONAL ENGINEER 5-15-98

NO.	DATE	REMARKS	BY

REVISIONS

DESIGN

DESIGNED BY	D.A.L.	DATE 2/97
DRAWN BY	A.S.C.	DATE 2/97
CHECKED BY	D.A.L.	DATE 2/97

BRASHER & LORENZ, INC.
Consulting Engineers
2201 San Pedro NE Building 1 Suite 210
Albuquerque, New Mexico 87110
Ph: 505-888-6088 Fax: 505-888-6188

CITY OF ALBUQUERQUE
PUBLIC WORKS DEPARTMENT
ENGINEERING DEVELOPMENT GROUP

TITLE:
SUNPORT PARK
LAYOUT SHEET

Design Review Committee: APPROVED JUL 29 1998 DESIGN REVIEW COMMITTEE
City Engineer Approval
Last Design Update | Mo./Day/Yr. | Mo./Day/Yr.

City Project No.	Zone Map No.	Sheet	Of
5651.82	M-15	3	24

6039-BDY.DWG 4/15/98 1"=100'

MATCHLINE A–A SEE SHEET 5 FOR CONTINUATION

STORM DRAIN "C" BY PUBLIC WORK ORDER – SEE SHEET 10

STORM DRAIN "D" BY PUBLIC WORK ORDER – SEE SHEET 10

SUNPORT BOULEVARD S.E.

R = 2363.83'
L = 101.65'

R = 2836.12'
L = 443.86'

111.71'
N 88°14'43" E

N 85°46'49" E

S 04°13'11" E
64.58'

150.68'
N 85°46'49" E

S 00°14'24" E

UNIVERSITY BLVD.
(86' R/W)

EXISTING DETENTION POND VOL=

EXISTING 10' PNM & MTN. BELL EASEMENT FILED 7/22/86, BK. C31, PG. 15

TRACT A-2
REPLAT OF TRACT A
MUNICIPAL ADDITION NO. 9
FILED 6/12/86, BK. C30, PG. 146

REMOVE & REPLACE EXISTING C.L. FENCING

RECONSTRUCT SPILLWAY SEE SHEET 13

CONSTRUCT RETAINING WALL SEE SHT 13

PROPOSED PUBLIC ACCESS EASEMENT

CURB NOT BUILT

AIRCRAFT AVE
(60' R/W)

AIRCRAFT AVE BY PUBLIC WORK ORDER SEE SHEET 6

SUNPORT PARK
PHASE 2
(TO BE BUILT UNDER FUTURE CONTRACT)

PROPOSED 150' x 150' INTERIM PUBLIC DRAINAGE EASEMENT

CONSTRUCT CHANNEL SEE DETAIL B/5 SHEETS

INTERIM RETENTION POND
MINIMUM VOL= 6490 CF
BOTTOM @ 5146.0
MAX WSE= 5149.0

RE-VEGETATE ALL EXPOSED SIDESLOPES WITH NATIVE SEED MIX

CONSTRUCT SPILLWAY SEE DETAIL A/5 SHEET 5

KEYED NOTES ①

1. CONSTRUCT 6" CONC C&G PER DETAIL Ⓐ
2. CONSTRUCT 6" ASPHALT CURB PER COA STD DWG 2415
3. CONSTRUCT 6" CONCRETE HEADER CURB PER PER COA STD DWG 2415

NOTE: ③ NOT CONSTRUCTED

LEGEND

ITEM	EXISTING	PROPOSED
WATERLINE	6" W	6" W
SANITARY SEWER	8" SAS	8" SAS
STORM SEWER	36" SD	24" SD
FIRE HYDRANT		
VALVE		
WATER SERVICE (SINGLE)		
WATER SERVICE (DOUBLE)		
MANHOLE		
CURB		
DROP INLET		
OVERHEAD ELEC	OHE	
UNDERGROUND ELEC, GAS, TEL, TV	UGT	
FLOWLINE ELEV.	FL 0.14	FL 0.14
TOP OF CURB ELEV.	99.3	99.31
SPOT ELEV (VERIFIED)	× 16.7	16.7
SEWER SERVICE		
RIGHT OF WAY		
POWER POLE (GUYED)	PP	
CHAIN LINK FENCE		
CENTERLINE		
RETAINING WALL		
TOP OF ASPHALT ELEV.	TA 16.2	TA 16.2
STORM DRAIN		
FENCE		

AS. BUILT SPOT

ENGINEER'S CERTIFICATION

I, the undersigned, being a Professional Engineer in the State of New Mexico, do hereby certify that this drawing was prepared by me or under my supervision, and that the as-built information shown on Sheets 25 and 26 is based on actual field measurements performed by Marquez Surveying Co., Inc, and inspections performed by Brasher & Lorenz, Inc. I further certify that, as of this date, the as-built condition of the site is in substantial compliance with the approved Grading and Drainage Plan prepared by Brasher & Lorenz, Inc., dated March 17, 1998.

This certification is limited to on-site grading and drainage improvements and does not extend to the structural integrity of the materials used nor the workmanship of the contractor. Any future modifications to the site improvements shall render this certification null and void.

Dennis A. Lorenz, NMPE 9647 — 12-2-99 Date

N

1 inch = 50 ft.

CURB & GUTTER DETAIL (A/4)
NTS

ASPHALT PAVEMENT SECTION (B/4)
NTS

COMPACTION SUBGRADE @ 95% ASTM D-1557

ASPHALTIC CONCRETE PAVEMENT-GRADATION "B" PER SPECIFICATIONS

COMPACTED SUBGRADE @ 90% ASTM D-1557

AS BUILT INFORMATION

CONTRACTOR: MARQUEZ SURVEYING CO. INC. DATE 9-1999
WORK STAKED BY: MARQUEZ SURVEYING CO. INC. DATE 11/1999
INSPECTOR'S FIELD ACCEPTANCE BY: Clay Smith DATE 11-22-99
VERIFICATION BY: MARQUEZ SURVEYING CO. INC. DATE 6-22-99
AS-BUILT WORK CORRECTED BY: MARQUEZ SURVEYING CO. INC. DATE 8-10-99
MICRO-FILM INFORMATION
RECORDED BY — DATE
NO.

BENCH MARKS

ACS BRASS TABLET (CASTINGS: "LIMBAUGH ENGINEERS INC. STAMPED HV-14 RESET 1974 ACS") SET IN TOP OF A CONCRETE POST FLUSH WITH THE GROUND, LOCATED ABOUT 350 FT SOUTH OF VIEWPOINT ROAD, 0.15 MILES WEST OF YALE BLVD.
ELEVATION= 5259.9

SURVEY INFORMATION

FIELD NOTES

NO.	BY	DATE

ENGINEER'S SEAL

DENNIS A. LORENZ, NEW MEXICO, 9647, REGISTERED PROFESSIONAL ENGINEER — 3-17-98

NO.	DATE	REMARKS	BY

REVISIONS

DESIGN		
DESIGNED BY	D.A.L.	DATE 2/98
DRAWN BY	MDT	DATE 2/98
CHECKED BY	D.A.L.	DATE 2/98

BRASHER & LORENZ, INC.
Consulting Engineers
2201 San Pedro NE Building 1 Suite 210
Albuquerque, New Mexico 87110
Ph: 505-888-6088 Fax: 505-888-6188

CITY OF ALBUQUERQUE
PUBLIC WORKS DEPARTMENT
ENGINEERING DEVELOPMENT GROUP

TITLE: SUNPORT PARK
GRADING PLAN (EAST PORTION)

Design Review Committee | City Engineer Approval — Approved @ DRB | Last Design Update | Mo./Day/Yr. | Mo./Day/Yr.

City Project No. 5651.82 | Zone Map No. M-15 | Sheet 4 Of 26

6039G-D2.DWG 4/15/98 1"=50'

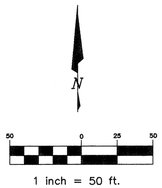

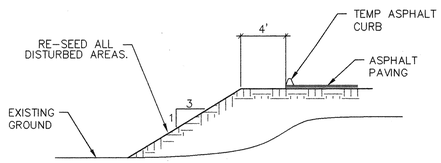

FILL SLOPE SECTION (A/5)
NTS

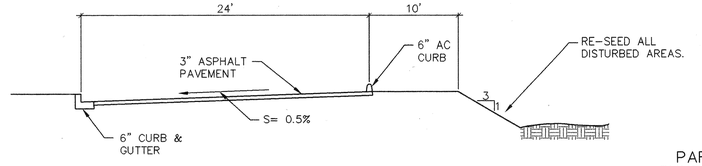

SECTION (B/5)
N.T.S.

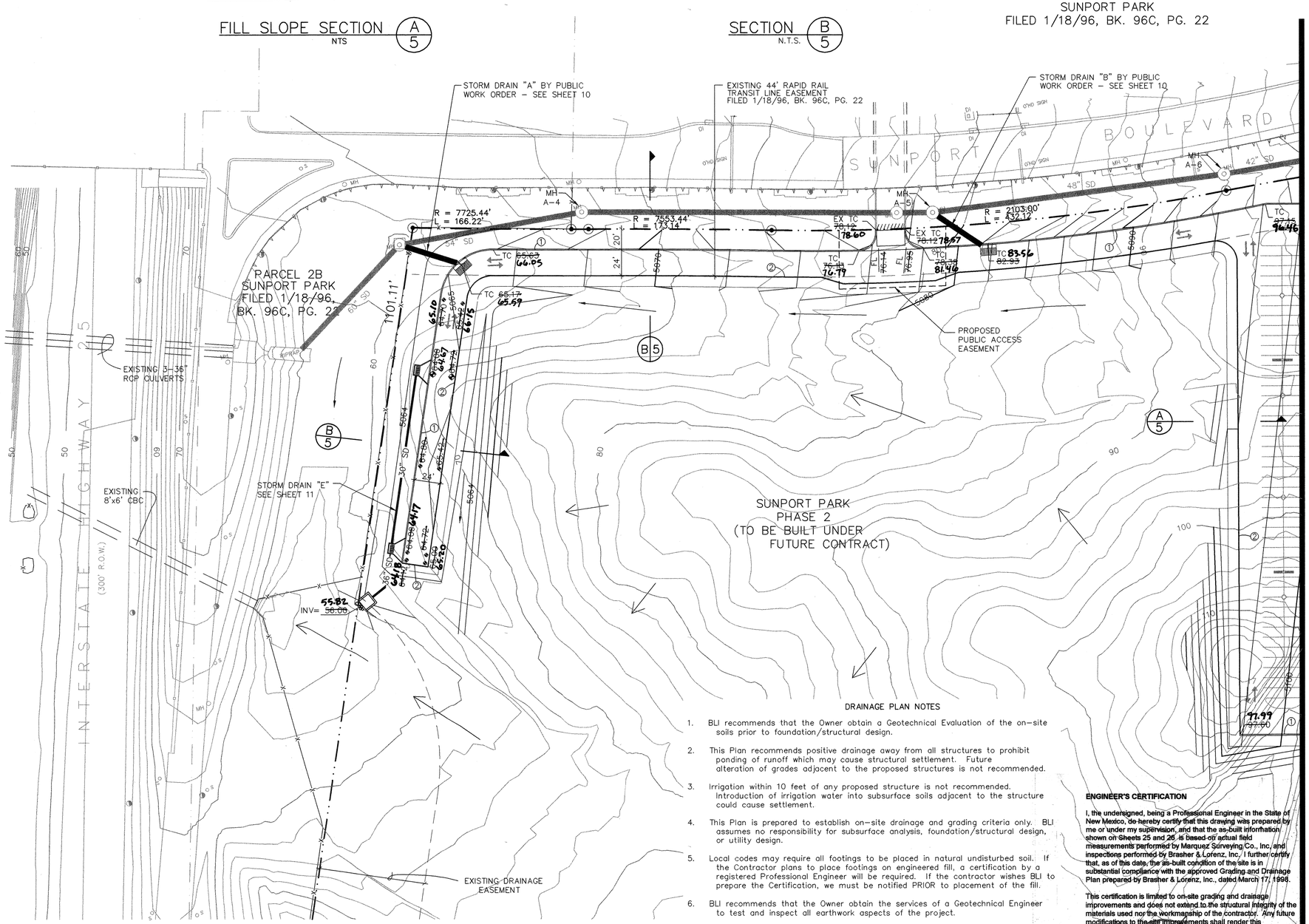

LEGEND

ITEM	EXISTING	PROPOSED
WATERLINE	6" W	6" W
SANITARY SEWER	8" SAS	8" SAS
STORM SEWER	36" SD	24" SD
FIRE HYDRANT		
VALVE		
WATER SERVICE (SINGLE)		
WATER SERVICE (DOUBLE)		
MANHOLE		
CURB		
DROP INLET		
OVERHEAD ELEC	OHE	
UNDERGROUND ELEC, GAS,TEL,TV	UGT	
FLOWLINE ELEV.	FL 0.14	FL 0.14
TOP OF CURB ELEV.	99.3	99.31
SPOT ELEV. (VERIFIED)	×16.7	16.7
SEWER SERVICE		
RIGHT OF WAY		
POWER POLE (GUYED)	PP	
CHAIN LINK FENCE		
CENTERLINE		
RETAINING WALL		
TOP OF ASPHALT ELEV.	TA 16.2	TA 16.2
STORM DRAIN		
FENCE		

AS-BUILT SPOT 167 16.3

KEYED NOTES ①

① CONSTRUCT 6" CONC C&G PER DETAIL (A) SHEET 5

② CONSTRUCT 6" ASPHALT CURB PER COA STD DWG 2415

③ CONSTRUCT 6" CONCRETE HEADER CURB PER PER COA STD DWG 2415

④ CONSTRUCT CONCRETE RETAINING WALL

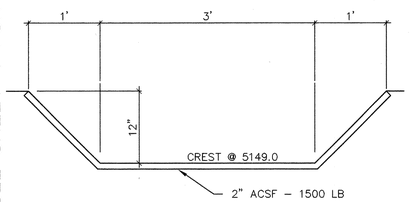

SPILLWAY DETAIL (A/5)
N.T.S.

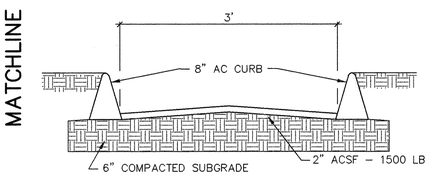

CHANNEL DETAIL (B/5)
N.T.S.

DRAINAGE PLAN NOTES

1. BLI recommends that the Owner obtain a Geotechnical Evaluation of the on-site soils prior to foundation/structural design.
2. This Plan recommends positive drainage away from all structures to prohibit ponding of runoff which may cause structural settlement. Future alteration of grades adjacent to the proposed structures is not recommended.
3. Irrigation within 10 feet of any proposed structure is not recommended. Introduction of irrigation water into subsurface soils adjacent to the structure could cause settlement.
4. This Plan is prepared to establish on-site drainage and grading criteria only. BLI assumes no responsibility for subsurface analysis, foundation/structural design, or utility design.
5. Local codes may require all footings to be placed in natural undisturbed soil. If the Contractor plans to place footings on engineered fill, a certification by a registered Professional Engineer will be required. If the contractor wishes BLI to prepare the Certification, we must be notified PRIOR to placement of the fill.
6. BLI recommends that the Owner obtain the services of a Geotechnical Engineer to test and inspect all earthwork aspects of the project.
7. The property boundary shown on this Plan is given for information only to describe the project limits. Property boundary information shown hereon does not constitute a boundary survey. A boundary survey performed by a licensed New Mexico Registered Professional Surveyor is recommended prior to construction.

ENGINEER'S CERTIFICATION

I, the undersigned, being a Professional Engineer in the State of New Mexico, do hereby certify that this drawing was prepared by me or under my supervision, and that the as-built information shown on Sheets 25 and 26, is based on actual field measurements performed by Marquez Surveying Co., Inc, and inspections performed by Brasher & Lorenz, Inc. I further certify that, as of this date, the as-built condition of the site is in substantial compliance with the approved Grading and Drainage Plan prepared by Brasher & Lorenz, Inc., dated March 17, 1998.

This certification is limited to on-site grading and drainage improvements and does not extend to the structural integrity of the materials used nor the workmanship of the contractor. Any future modifications to the site improvements shall render this certification null and void.

Dennis A. Lorenz, NMPE 9647 — 12-2-99 Date

AS BUILT INFORMATION
CONTRACTOR: Marquez Surveying Co. Inc. DATE 4-1999
WORK STAKED BY: Marquez Surveying Co. Inc DATE 11/19/99
INSPECTOR'S ACCEPTANCE BY: Elay Smith
FIELD VERIFICATION BY: Marquez Surveying Co. Inc DATE 6-22-99
DRAWINGS CORRECTED BY: Marquez Surveying Co. Inc DATE 8-10-99
MICRO-FILM INFORMATION
RECORDED BY: DATE
NO.

BENCH MARKS
ACS BRASS TABLET (CASTINGS: "LIMBAUGH ENGINEERS INC. STAMPED HV-14 RESET 1974 ACS") SET IN TOP OF A CONCRETE POST FLUSH WITH THE GROUND, LOCATED ABOUT 350 FT SOUTH OF VIEWPOINT ROAD, 0.15 MILES WEST OF YALE BLVD.
ELEVATION= 5259.9

SURVEY INFORMATION
FIELD NOTES

NO.	BY	DATE

ENGINEER'S SEAL
DENNIS A. LORENZ — NEW MEXICO — 9647 — REGISTERED PROFESSIONAL ENGINEER
9-17-98

NO.	DATE	REMARKS	BY

REVISIONS

DESIGN

DESIGNED BY	S.K.M.	DATE 2/96
DRAWN BY	MDT	DATE 2/96
CHECKED BY	D.A.L.	DATE 2/96

BRASHER & LORENZ, INC.
Consulting Engineers
2201 San Pedro Building 1 Suite 210
Albuquerque, New Mexico 87110
Ph: 505-888-6088 Fax: 505-888-6188

CITY OF ALBUQUERQUE
PUBLIC WORKS DEPARTMENT
ENGINEERING DEVELOPMENT GROUP

TITLE: SUNPORT PARK
GRADING PLAN (WEST PORTION)

Design Review Committee: ~~Approved~~ Approved @ DRB
City Engineer Approval
Last Design Update — Mo./Day/Yr. — Mo./Day/Yr.

City Project No. 5651.82 | Zone Map No. M-15 | Sheet 5 Of 26 16

SUNPORT.DWG 3/2/98 1"=50'

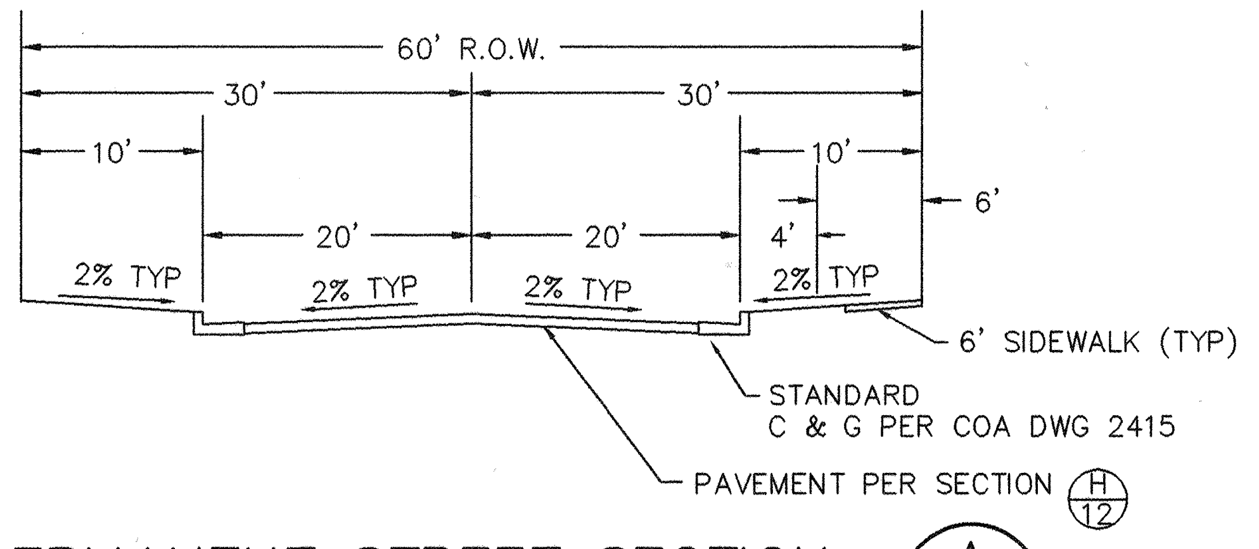

PERMANENT STREET SECTION A/6
NTS

CURVE	RADIUS	LENGTH	DELTA
C1	25.00'	35.83'	80°30'03"
C2	25.00'	37.95'	86°58'32"
C3	270.00'	191.45'	40°37'39"
C4	280.00'	198.55'	40°37'42"
C5	320.00'	226.91'	40°37'42"
C6	330.00'	234.00'	40°37'40"
C7	60.00'	94.25'	90°00'08"
C8	30.00'	47.06'	89°52'56"
C9	30.00'	47.19'	90°07'04"
C10	60.00'	96.83'	92°28'01"
C11*	300.00'	212.73	40°37'39"
C12	14.00'	43.41'	117°40'01"
C13	14.00'	43.41'	117°40'01"

* NO S.E.

NOTE:
CONTRACTOR SHALL VERIFY EXACT POSITION OF EXISTING MASTARM MA3 (AT NW RETURN) AND DETERMINE CAPATIBILITY WITH PROPOSED STREET AND SIDEWALK IMPROVEMENTS. THE PROJECT ENGINEER SHALL BE NOTIFIED TO DETERMINE IF RELOCATION OF MASTARM IS REQUIRED.

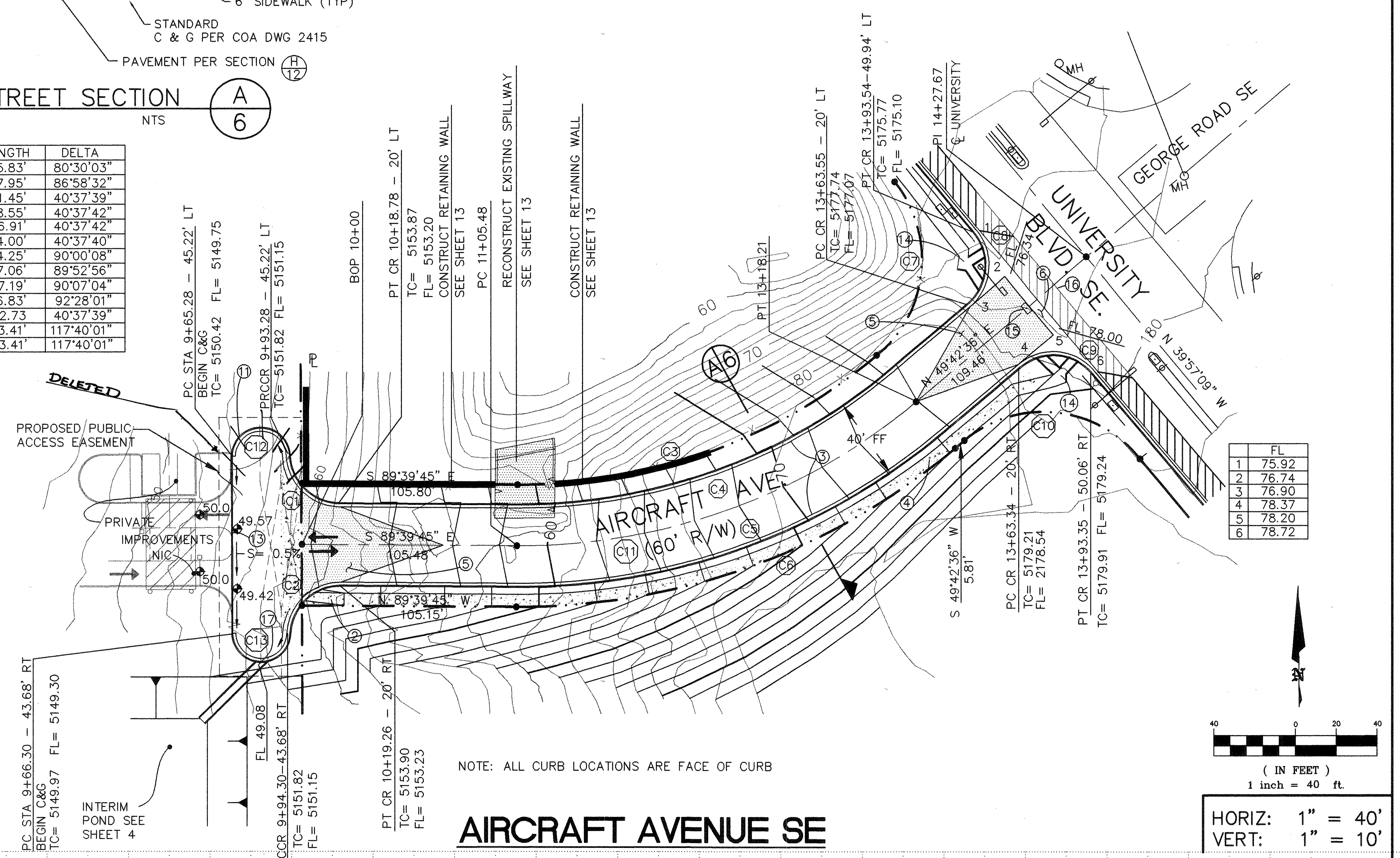

	FL
1	75.92
2	76.74
3	76.90
4	78.37
5	78.20
6	78.72

NOTE: ALL CURB LOCATIONS ARE FACE OF CURB

AIRCRAFT AVENUE SE

HORIZ: 1" = 40'
VERT: 1" = 10'

CURVE	RADIUS	LENGTH	DELTA
C1	25.00'	39.27'	90°00'00"
C2	25.00'	39.27'	90°00'00"

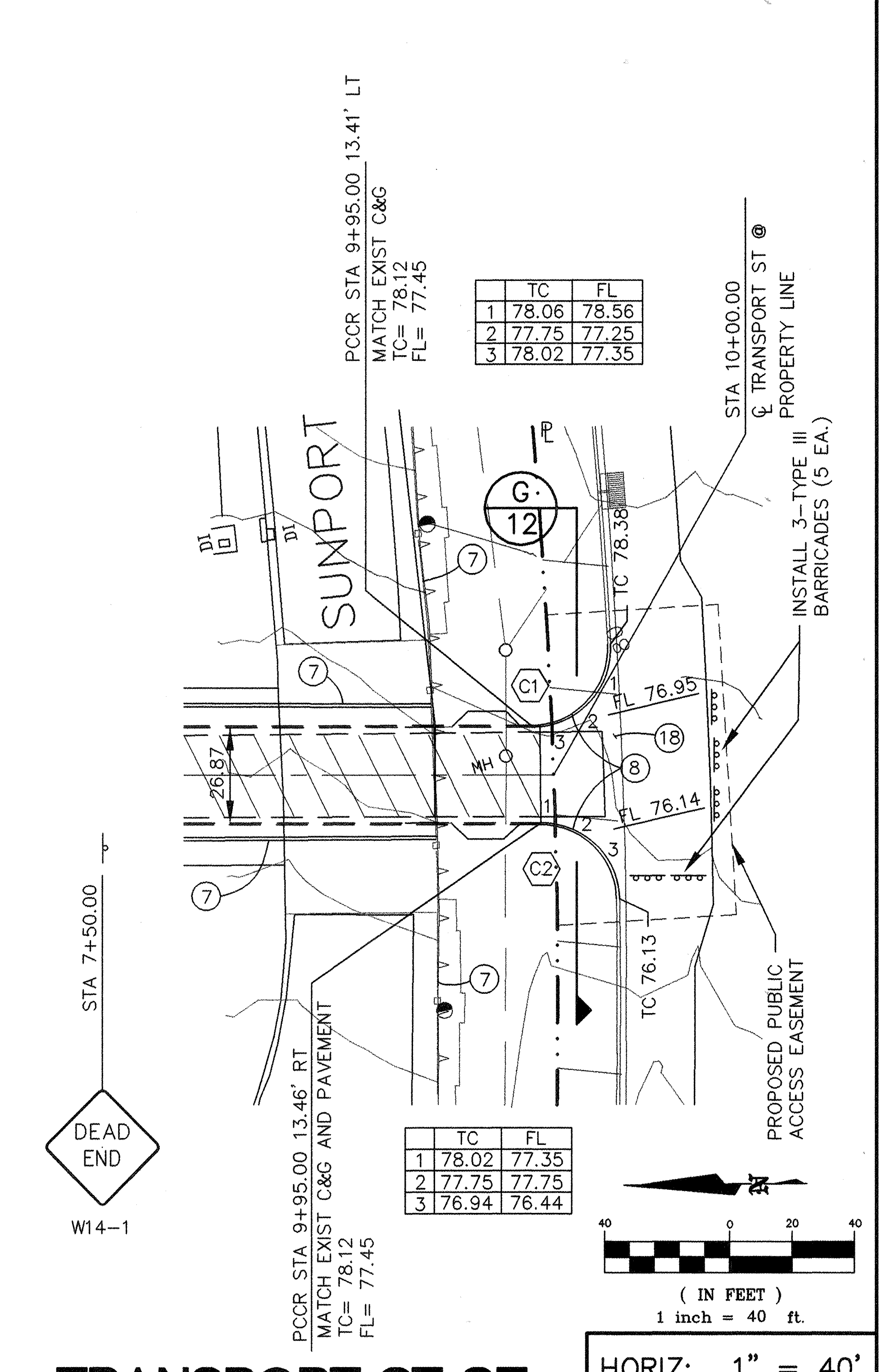

	TC	FL
1	78.06	78.56
2	77.75	77.25
3	78.02	77.35

	TC	FL
1	78.02	77.35
2	77.75	77.75
3	76.94	76.44

TRANSPORT ST SE

HORIZ: 1" = 40'
VERT: 1" = 10'

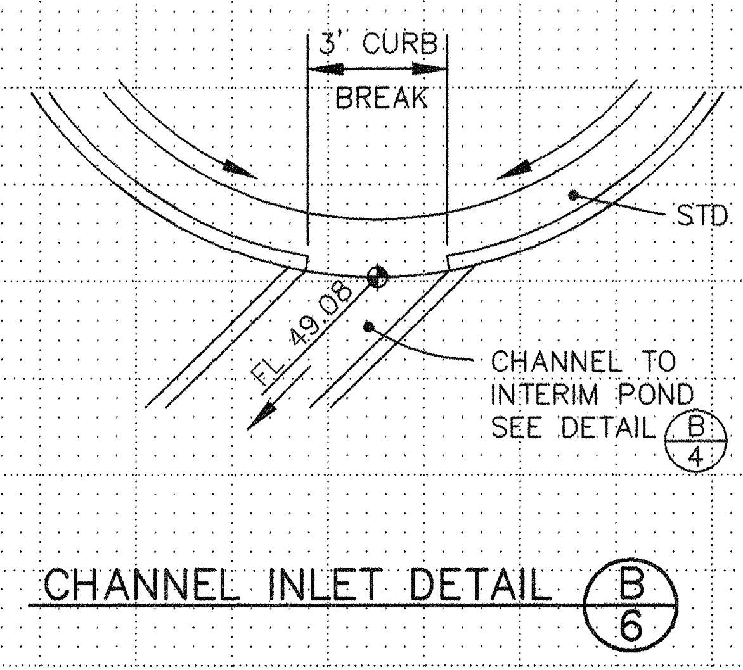

CHANNEL INLET DETAIL B/6

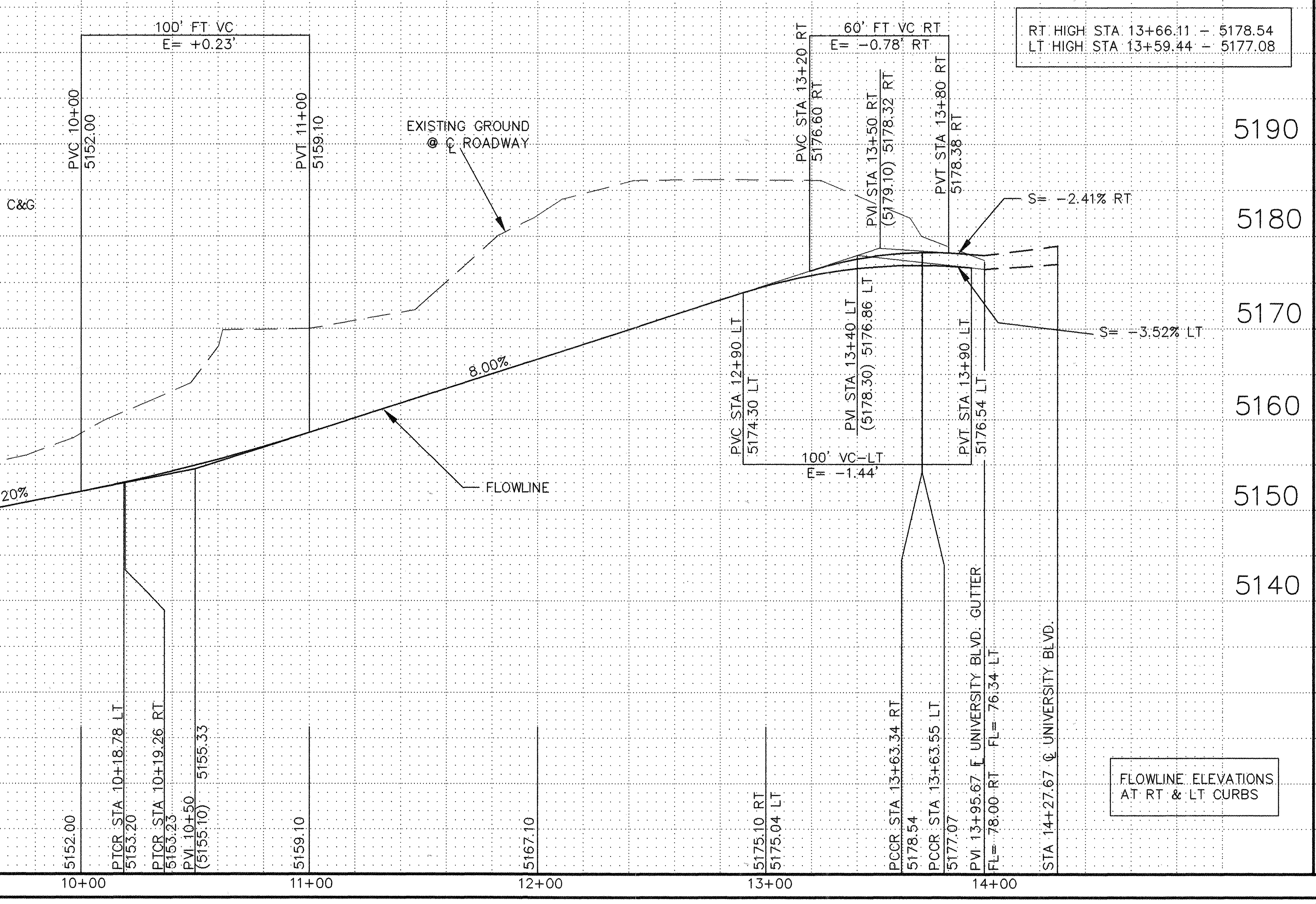

RT HIGH STA 13+66.11 – 5178.54
LT HIGH STA 13+59.44 – 5177.08

FLOWLINE ELEVATIONS AT RT & LT CURBS

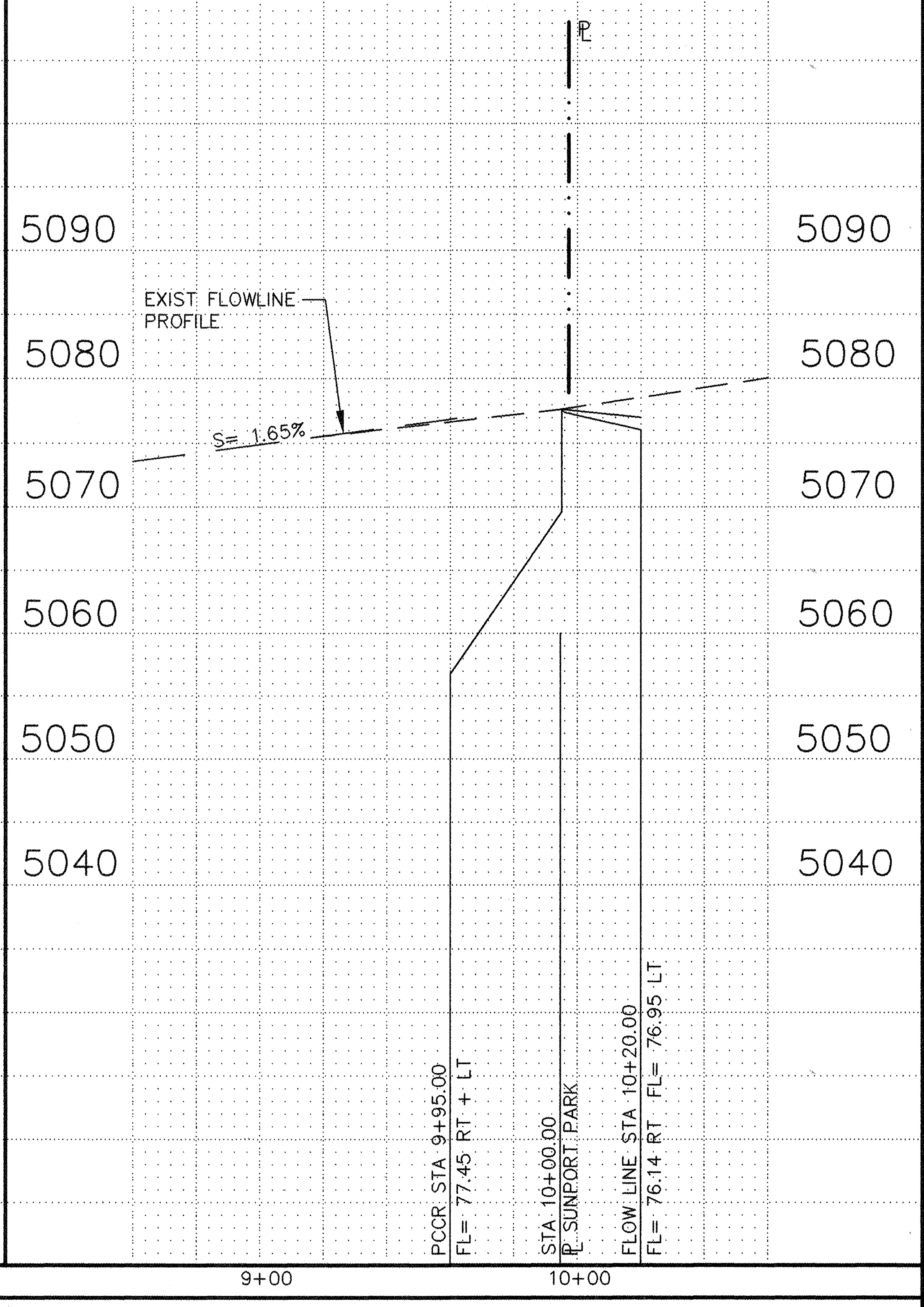

LEGEND

ITEM	EXISTING	PROPOSED
WATERLINE	6" W	6" W
SANITARY SEWER	8" SAS	8" SAS
STORM SEWER	36" SD	24" SD
FIRE HYDRANT	◎	◎
VALVE	⋈	⋈
WATER SERVICE (SINGLE)		▫
WATER SERVICE (DOUBLE)		▫▫
MANHOLE	○	●
CURB	═	═
DROP INLET	▥	■
OVERHEAD ELEC	OHE	
UNDERGROUND ELEC, GAS,TEL,TV	UGT	
FLOWLINE ELEV.	FL 0.14	FL 0.14
TOP OF CURB ELEV.	99.3	99.31
SPOT ELEV.	× 16.7	⊕ 16.7
SEWER SERVICE	⊣	⊣
RIGHT OF WAY	— · · —	
POWER POLE (GUYED)	● PP	
CHAIN LINK FENCE	—×—	
CENTERLINE	— – —	
RETAINING WALL	▭	▭
TOP OF ASPHALT ELEV.	TA 16.2	TA 16.2
TRAFFIC SIGNAL PULL BOX	⊡	
MAST ARM	⊖—▭	
PEDESTAL	⊖	

NOTES:

1. ALL STATIONING IS BASED ON CENTERLINE OF ROW UNLESS NOTED OTHERWISE.

KEYED NOTES ○

1. CONSTRUCT WHEELCHAIR RAMP PER STD DWG. 2441 (CASE II).
2. CONSTRUCT UNI-DIRECTIONAL WHEELCHAIR RAMP PER STD DWG. 2426.
3. CONSTRUCT STD CURB & GUTTER PER STD DWG. 2415 USE 3\4" INVERT.
4. CONSTRUCT 6' SIDEWALK, SOUTH SIDE ONLY.
5. 50' CROWN TRANSITION.
6. CONSTRUCT VALLEY GUTTER PER STD DWG. 2420.
7. ABUTMENT WALL.
8. TRANSITION FROM 8" STD C&G TO 6" C&G THRU CURB RETURN.
9. REGRADE EXISTING MANHOLE PER STD DWG. 2460.
10. PRIVATE RETAINING WALL – NIC.
11. CONSTRUCT HAMMERHEAD TURN–AROUND PER STD DWG 2512.
12. EDGE OF PAVEMENT
13. EDGE OF PAVEMENT
14. CONSTRUCT CURB ACCESS RAMP PER DETAIL F/12
15. TRAFFIC SIGNAL PULL BOX TO BE RESET. SEE SHEET 14.
16. EXISTING WHITE LANE STRIPING TO BE OBLITERATED. SEE SHEET 14
17. PROVIDE 3' CURB BREAK AT CHANNEL INLET PER DETAIL B/6
18. CONSTRUCT VALLEY GUTTER PER STD STD DWG 2420

AS BUILT INFORMATION

CONTRACTOR	Marquez Surveying Co Inc	
WORK STAKED BY	Marquez Surveying Co Inc	DATE 4-1999
INSPECTOR'S ACCEPTANCE BY	Eloy Smith	DATE 4/1999
FIELD VERIFICATION BY	Marquez Surveying Co Inc	DATE 6-22-99
DRAWINGS CORRECTED BY	Marquez Surveying Co Inc	DATE 8-10-99

MICRO-FILM INFORMATION

RECORDED BY
DATE
NO.

BENCH MARKS

ACS BRASS TABLET CASTINGS: "LIMBAUGH ENGINEERS INC. STAMPED HV-14 RESET 1974 ACS" SET IN TOP OF A CONCRETE POST FLUSH WITH THE GROUND. LOCATED ABOUT 350 FT SOUTH OF VIEWPOINT ROAD, 0.15 MILES WEST OF YALE BLVD.
ELEVATION= 5259.9

SURVEY INFORMATION

FIELD NOTES

NO.	BY	DATE

ENGINEER'S SEAL

A. LORENZ
5.15.98

NO.	DATE	REMARKS	BY

REVISIONS

DESIGN		
DESIGNED BY	S.M.	DATE 2/97
DRAWN BY	A.S.C.	DATE 2/97
CHECKED BY	D.A.L.	DATE 2/97

BRASHER & LORENZ, INC.
Consulting Engineers
2201 San Pedro NE Building 1 Suite 210
Albuquerque, New Mexico 87110
Ph: 505-888-6088 Fax: 505-888-6188

CITY OF ALBUQUERQUE
PUBLIC WORKS DEPARTMENT
ENGINEERING DEVELOPMENT GROUP

TITLE:
SUNPORT PARK
AIRCRAFT AVE. & TRANSPORT ST. NE
STREET PAVING PLAN & PROFILE

Design Review Committee
APPROVED
JUL 29 1998
DESIGN REVIEW COMMITTEE

City Engineer Approval

Last Design Update

Mo./Day/Yr.	Mo./Day/Yr.

City Project No. 5651.82
Zone Map No. M–15
Sheet 6 Of ~~24~~ 26

WATER SHUT-OFF PLAN

1. VALVES, HYDRANTS AND APPURTENANCES OF THE CITY WATER SYSTEM SHALL BE OPERATED BY CITY PERSONNEL ONLY.
2. THE CONTRACTOR SHALL BE RESPONSIBLE FOR TIMING AND COORDINATION OF WATER SHUTOFF. AT LEAST FIVE (5) WORKING DAYS PRIOR TO CONSTRUCTION, CONTRACTOR SHALL CONTACT THE WATER SYSTEMS DIVISION, 857-8200, TO INITIATE IMPLEMENTATION OF THE NON-PRESSURIZED CONNECTION PLAN.
3. SYSTEM SHUTDOWN SHALL BE ACCOMPLISHED BY CLOSING VALVE Ⓐ
4. ANTICIPATED SHUTDOWN DURATION IS 8 HOURS.

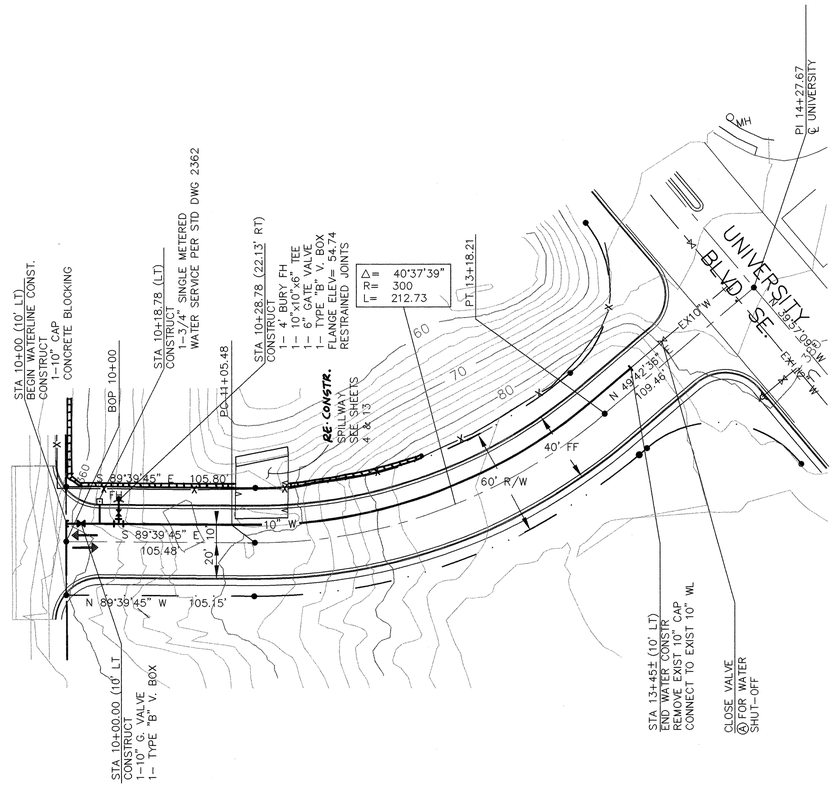

AIRCRAFT AVENUE SE

1 inch = 40 ft.

HORIZ: 1" = 40'
VERT: 1" = 10'

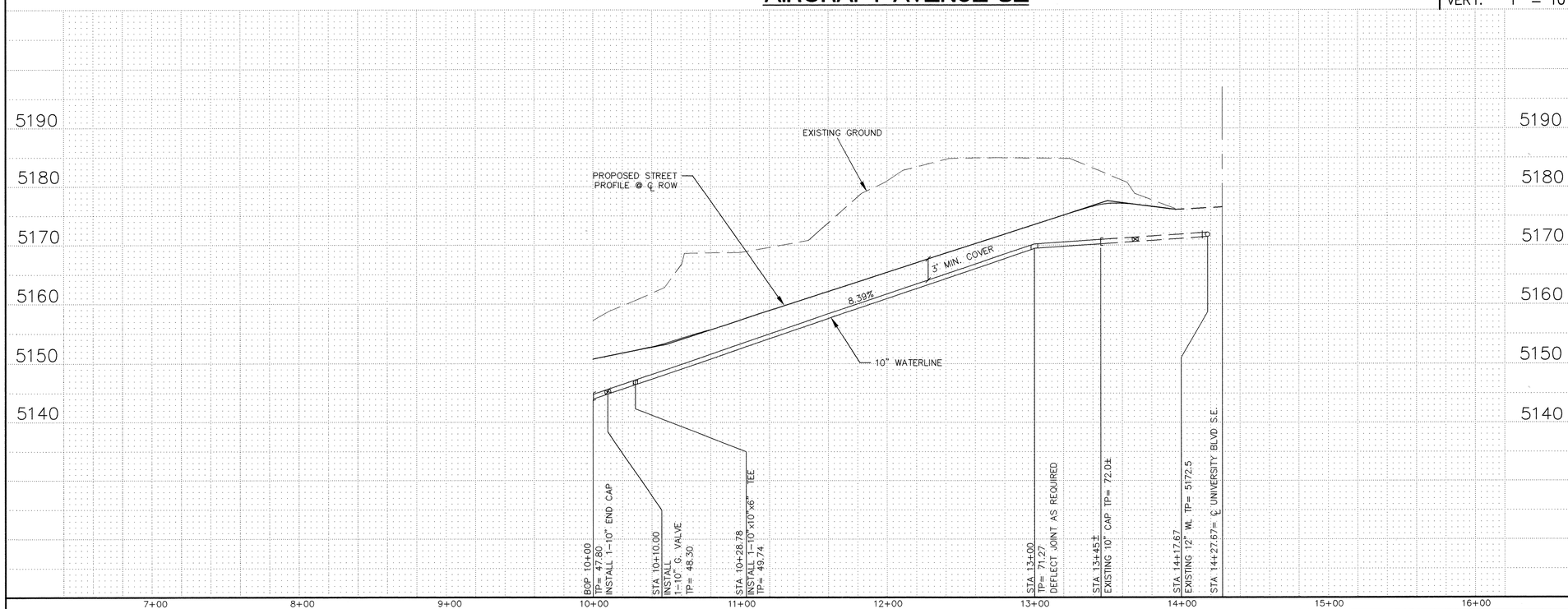

6039-W.DWG 4/15/98 1"=40'

LEGEND

ITEM	EXISTING	PROPOSED
WATERLINE	6" W	6" W
SANITARY SEWER	8" SAS	8" SAS
STORM SEWER	36" SD	24" SD
FIRE HYDRANT		
VALVE		
WATER SERVICE (SINGLE)		
WATER SERVICE (DOUBLE)		
MANHOLE		
CURB		
DROP INLET		
OVERHEAD ELEC	OHE	
UNDERGROUND ELEC, GAS,TEL,TV	UGT	
FLOWLINE ELEV.	FL 0.14	FL 0.14
TOP OF CURB ELEV.	99.3	99.31
SPOT ELEV.	×16.7	16.7
SEWER SERVICE		
RIGHT OF WAY		
POWER POLE (GUYED)	PP	
CHAIN LINK FENCE		
CENTERLINE		
RETAINING WALL		
TOP OF ASPHALT ELEV.	TA 16.2	TA 16.2

RESTRAINED JOINT LENGTHS

10" TEE L= 73'

AS BUILT INFORMATION

CONTRACTOR	Marquez Surveying Co. Inc	
WORK STAKED BY	Marquez Surveying Co. Inc	DATE 4-1998
INSPECTOR'S ACCEPTANCE BY	Elev. Smith	DATE 11/1995
FIELD VERIFICATION BY	Marquez Surveying Co. Inc	DATE 4-22-98
DRAWINGS CORRECTED BY	Marquez Surveying Co. Inc	DATE 8-10-98
	MICRO-FILM INFORMATION	
RECORDED BY		DATE
NO.		

BENCH MARKS

ACS BRASS TABLET (CASTINGS: "LIMBAUGH ENGINEERS INC. STAMPED HV-14 RESET 1974 ACS") SET IN TOP OF A CONCRETE POST FLUSH WITH THE GROUND, LOCATED ABOUT 350 FT SOUTH OF VIEWPOINT ROAD, 0.15 MILES WEST OF YALE BLVD.
ELEVATION= 5259.9

SURVEY INFORMATION

FIELD NOTES

NO.	BY	DATE

ENGINEER'S SEAL

DENNIS A. LORENZ NEW MEXICO 9644 REGISTERED PROFESSIONAL ENGINEER
5-15-98

NO.	DATE	REMARKS	BY

REVISIONS

DESIGN			
DESIGNED BY	S.K.M.	DATE	2/97
DRAWN BY	A.S.C.	DATE	2/97
CHECKED BY	D.A.L.	DATE	2/97

BRASHER & LORENZ, INC.
Consulting Engineers
2201 San Pedro NE Building 1 Suite 210
Albuquerque, New Mexico 87110
Ph: 505-888-6088 Fax: 505-888-6188

CITY OF ALBUQUERQUE
PUBLIC WORKS DEPARTMENT
ENGINEERING DEVELOPMENT GROUP

TITLE: SUNPORT PARK
AIRCRAFT AVE. SE
WATERLINE PLAN & PROFILE

Design Review Committee: APPROVED JUL 29 1998 DESIGN REVIEW COMMITTEE
City Engineer Approval
Last Design Update | Mo./Day/Yr. | Mo./Day/Yr.

City Project No.	Zone Map No.	Sheet	Of
5651.82	M-15	7	26 / 27

WATER SHUT-OFF PLAN

1. VALVES, HYDRANTS AND APPURTENANCES OF THE CITY WATER SYSTEM SHALL BE OPERATED BY CITY PERSONNEL ONLY.
2. THE CONTRACTOR SHALL BE RESPONSIBLE FOR TIMING AND COORDINATION OF WATER SHUTOFF. AT LEAST FIVE (5) WORKING DAYS PRIOR TO CONSTRUCTION, CONTRACTOR SHALL CONTACT THE WATER SYSTEMS DIVISION, 857-8200, TO INITIATE IMPLEMENTATION OF THE NON-PRESSURIZED CONNECTION PLAN.
3. SYSTEM SHUTDOWN SHALL BE ACCOMPLISHED BY CLOSING VALVE Ⓐ
4. ANTICIPATED SHUTDOWN DURATION IS 8 HOURS.

CURVE DATA			
CURVE	RADIUS	LENGTH	DELTA
C1	1400.00'	60.96'	02°29'41"
C2	1911.00'	60.05'	01°48'02"

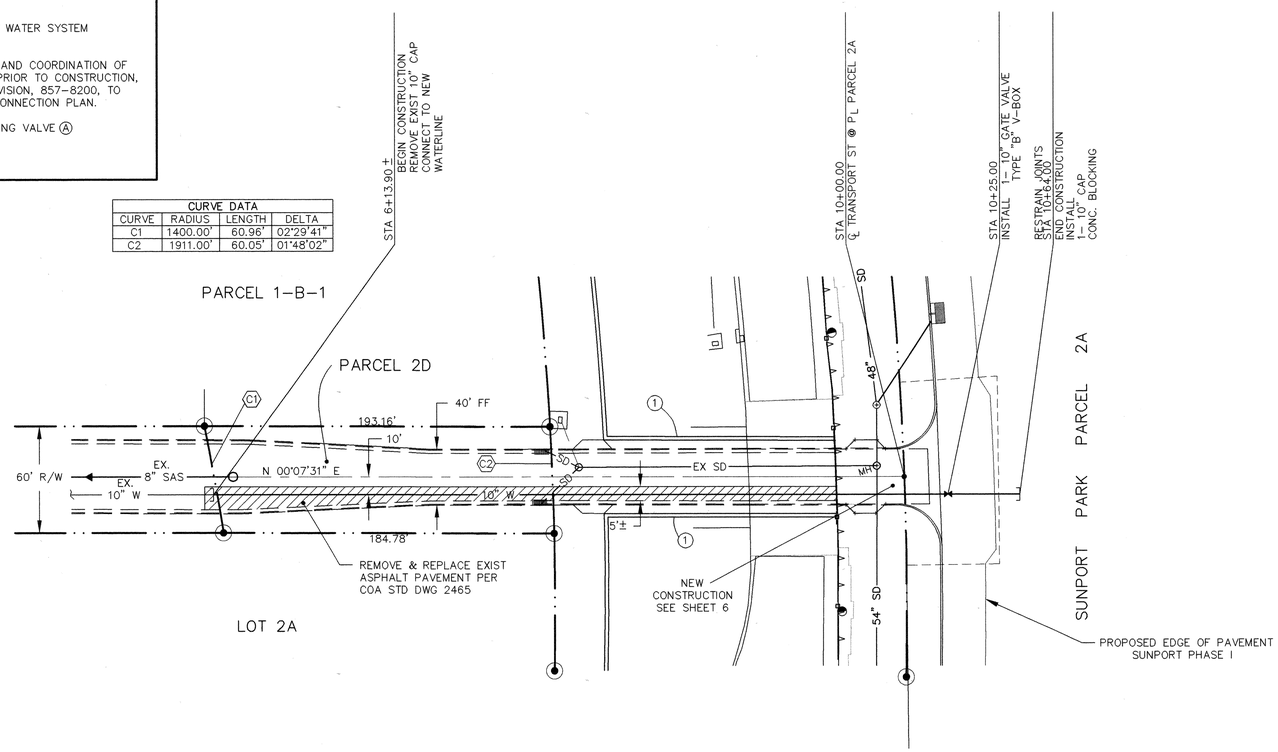

LEGEND

ITEM	EXISTING	PROPOSED
WATERLINE	6" W	6" W
SANITARY SEWER	8" SAS	8" SAS
STORM SEWER	36" SD	24" SD
FIRE HYDRANT		
VALVE		
WATER SERVICE (SINGLE)		
WATER SERVICE (DOUBLE)		
MANHOLE		
CURB		
DROP INLET		
OVERHEAD ELEC	OHE	
UNDERGROUND ELEC, GAS, TEL, TV	UGT	
FLOWLINE ELEV.	FL 0.14	FL 0.14
TOP OF CURB ELEV.	99.3	99.31
SPOT ELEV.	×16.7	16.7
SEWER SERVICE		
RIGHT OF WAY		
POWER POLE (GUYED)	PP	
CHAIN LINK FENCE	x	
CENTERLINE		
RETAINING WALL		
TOP OF ASPHALT ELEV.	TA 16.2	TA 16.2

RESTRAINED JOINT LENGTHS

10" TEE L= 73'

10" VALVE L= 115'

○ KEYED NOTES

1. ABUTMENT WALL

(IN FEET)
1 inch = 40 ft.

HORIZ: 1" = 40'
VERT: 1" = 5'

TRANSPORT ST SE

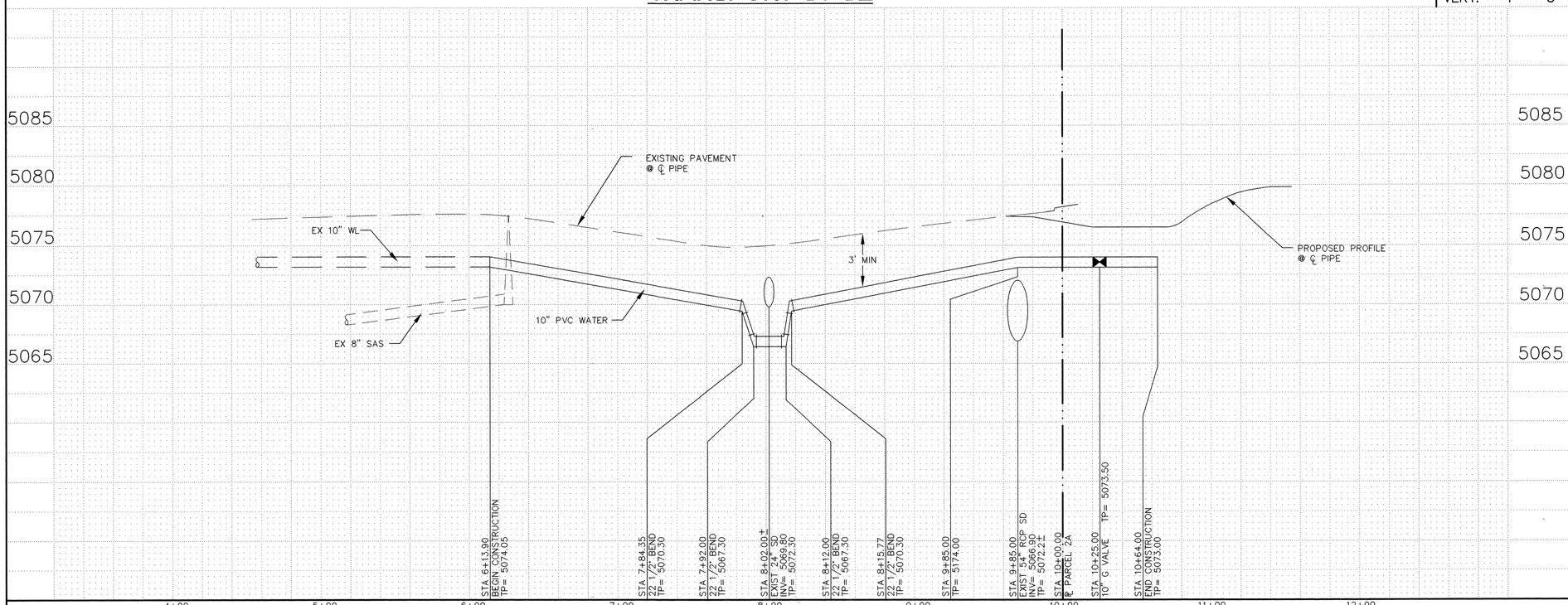

6039-W2.DWG 4/15/98 1"=40'

AS BUILT INFORMATION
CONTRACTOR Marquez Surveying Co. Inc. DATE 4-1999
WORK STAKED BY Marquez Surveying Co. Inc. DATE 11/12/98
INSPECTOR'S ACCEPTANCE BY Glen Smith DATE 11/12/98
FIELD VERIFICATION BY Marquez Surveying Co. Inc. DATE 6-22-99
DRAWINGS CORRECTED BY Marquez Surveying Co. Inc. DATE 8-10-99
MICRO-FILM INFORMATION
RECORDED BY DATE
NO.

BENCH MARKS
ACS BRASS TABLET (CASTINGS: "LIMBAUGH ENGINEERS INC. STAMPED HV-14 RESET 1974 ACS") SET IN TOP OF A CONCRETE POST FLUSH WITH THE GROUND, LOCATED ABOUT 350 FT SOUTH OF VIEWPOINT ROAD, 0.15 MILES WEST OF YALE BLVD.
ELEVATION= 5259.9

SURVEY INFORMATION
FIELD NOTES

NO.	BY	DATE

ENGINEER'S SEAL
DENNIS A. LORENZ NEW MEXICO 9583 REGISTERED PROFESSIONAL ENGINEER
5-15-98

NO.	DATE	REMARKS	BY
		REVISIONS	
		DESIGN	

DESIGNED BY S.K.M. DATE 5/97
DRAWN BY A.S.C. DATE 5/97
CHECKED BY D.A.L. DATE 5/97

BRASHER & LORENZ, INC.
Consulting Engineers
2201 San Pedro NE Building 1 Suite 210
Albuquerque, New Mexico 87110
Ph: 505-888-6088 Fax: 505-888-6188

CITY OF ALBUQUERQUE
PUBLIC WORKS DEPARTMENT
ENGINEERING DEVELOPMENT GROUP

SUNPORT PARK
TRANSPORT ST. SE
WATERLINE PLAN & PROFILE

Design Review Committee: APPROVED JUL 29 1998 DESIGN REVIEW COMMITTEE
City Engineer Approval
Last Design Update | Mo./Day/Yr. | Mo./Day/Yr.

City Project No. 5651.82 | Zone Map No. M-15 | Sheet 8 Of 26 27

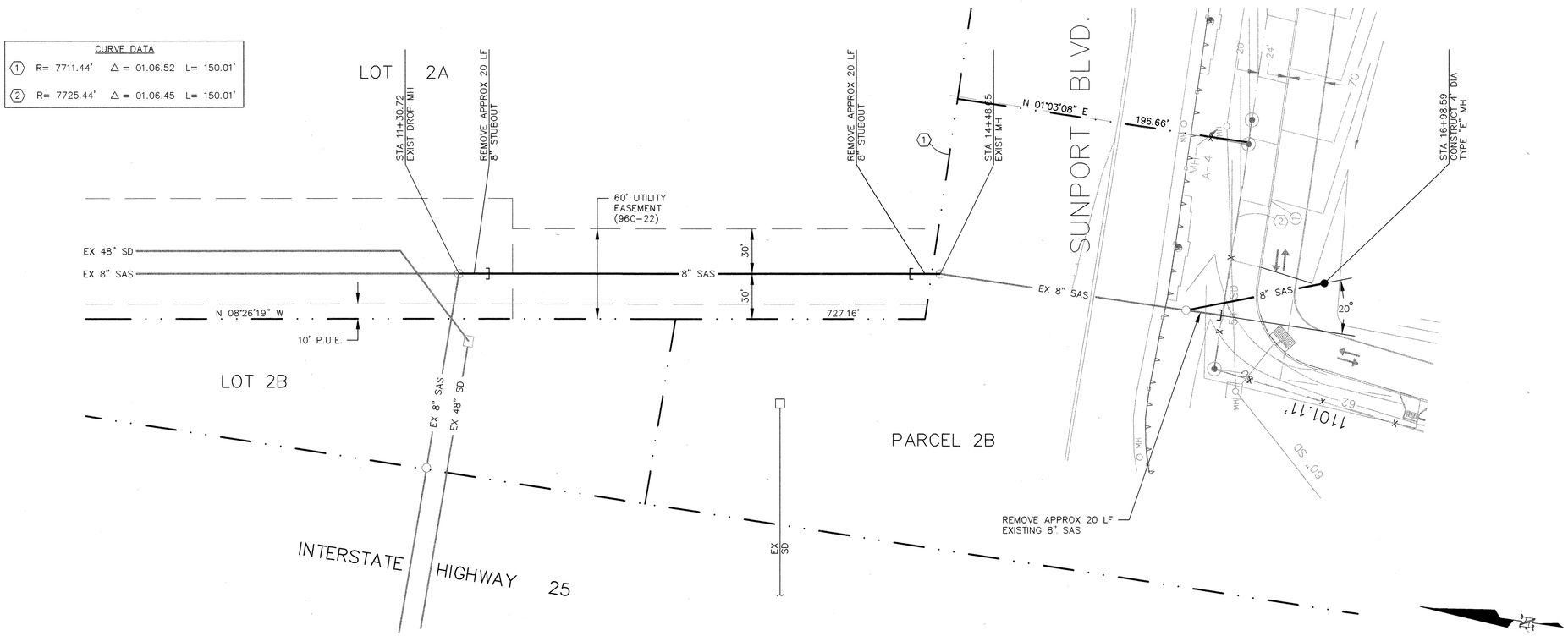

SANITARY SEWER - LINE "A"

HORIZ: 1" = 40'
VERT: 1" = 10'

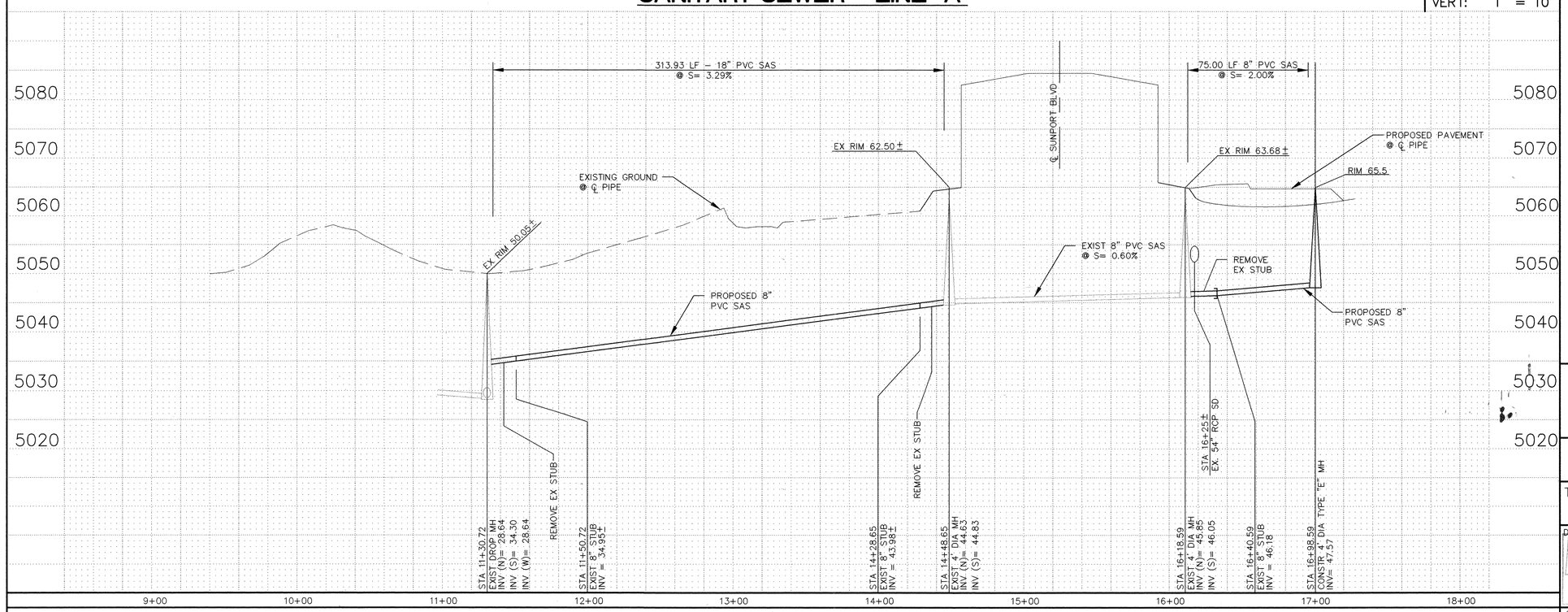

6039-N.DWG 4/15/98 1"=40'

LEGEND

ITEM	EXISTING	PROPOSED
WATERLINE	6" W	6" W
SANITARY SEWER	8" SAS	8" SAS
STORM SEWER	36" SD	24" SD
FIRE HYDRANT		
VALVE		
WATER SERVICE (SINGLE)		
WATER SERVICE (DOUBLE)		
MANHOLE		
CURB		
DROP INLET		
OVERHEAD ELEC	OHE	
UNDERGROUND ELEC, GAS, TEL, TV	UGT	
FLOWLINE ELEV.	FL 0.14	FL 0.14
TOP OF CURB ELEV.	99.3	99.31
SPOT ELEV.	×16.7	16.7
SEWER SERVICE		
RIGHT OF WAY		
POWER POLE (GUYED)	PP	
CHAIN LINK FENCE	x	
CENTERLINE		
RETAINING WALL		
TOP OF ASPHALT ELEV.	TA 16.2	TA 16.2

NOTE:

1. ALL STATIONING IS BASED ON CENTERLINE OF SAS PIPE UNLESS OTHERWISE NOTED.

AS BUILT INFORMATION

CONTRACTOR: Marquez Surveying Co. Inc.
STAKED BY: Marquez Surveying Co. Inc. DATE 4-1999
INSPECTOR'S ACCEPTANCE BY: Clay Smith DATE 11/1999
FIELD VERIFICATION BY: Marquez Surveying Co. Inc. DATE 6-28-99
DRAWINGS CORRECTED BY: Marquez Surveying Co. Inc. DATE 8-10-99
MICRO-FILM INFORMATION
RECORDED BY DATE
NO.

BENCH MARKS

ACS BRASS TABLET CASTINGS: "LIMBAUGH ENGINEERS INC. STAMPED HV-14 RESET 1974
ACS" SET IN TOP OF A CONCRETE POST FLUSH WITH THE GROUND, LOCATED ABOUT 350 FT SOUTH OF VIEWPOINT ROAD, 0.15 MILES WEST OF YALE BLVD.
ELEVATION= 5259.9

SURVEY INFORMATION

FIELD NOTES

NO.	BY	DATE

ENGINEER'S SEAL

DENNIS A. LORENZ NEW MEXICO 9264 REGISTERED PROFESSIONAL ENGINEER
5-15-98

NO.	DATE	REMARKS	BY

REVISIONS

DESIGN

DESIGNED BY	D.A.L.	DATE 2/97
DRAWN BY	A.S.C.	DATE 2/97
CHECKED BY	D.A.L.	DATE 2/97

BRASHER & LORENZ, INC.
Consulting Engineers
2201 San Pedro NE Building 1 Suite 210
Albuquerque, New Mexico 87110
Ph: 505-888-6088 Fax: 505-888-6188

CITY OF ALBUQUERQUE
PUBLIC WORKS DEPARTMENT
ENGINEERING DEVELOPMENT GROUP

TITLE: SUNPORT PARK
SANITARY SEWER - LINE "A"
PLAN & PROFILE

Design Review Committee: APPROVED JUL 29 1998 DESIGN REVIEW COMMITTEE

City Engineer Approval

Last Design Update | Mo./Day/Yr. | Mo./Day/Yr.

City Project No.	Zone Map No.	Sheet	Of
5651.82	M-15	9	24

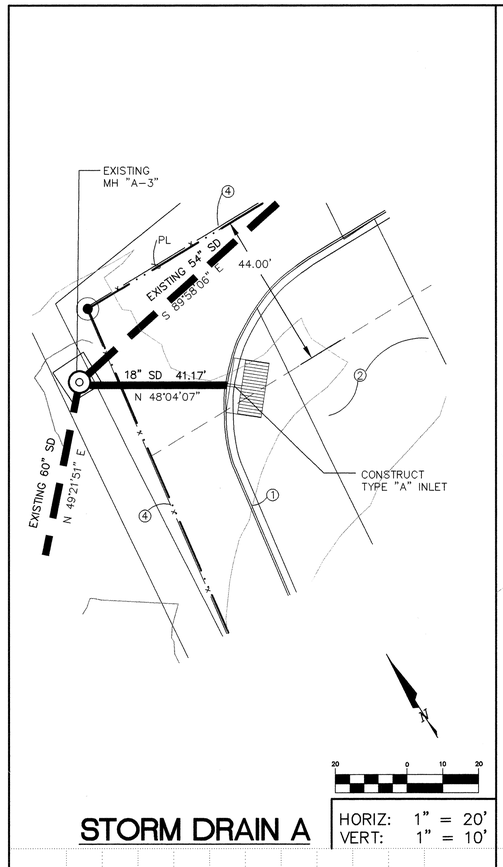

STORM DRAIN A

HORIZ: 1" = 20'
VERT: 1" = 10'

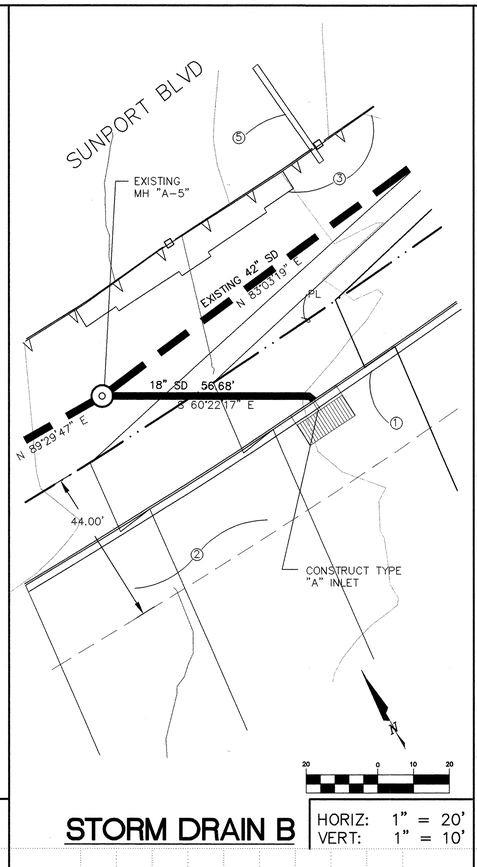

STORM DRAIN B

HORIZ: 1" = 20'
VERT: 1" = 10'

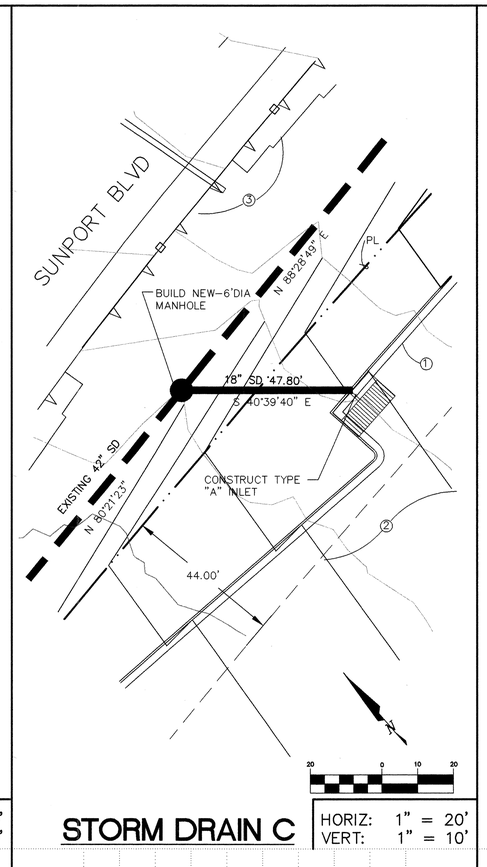

STORM DRAIN C

HORIZ: 1" = 20'
VERT: 1" = 10'

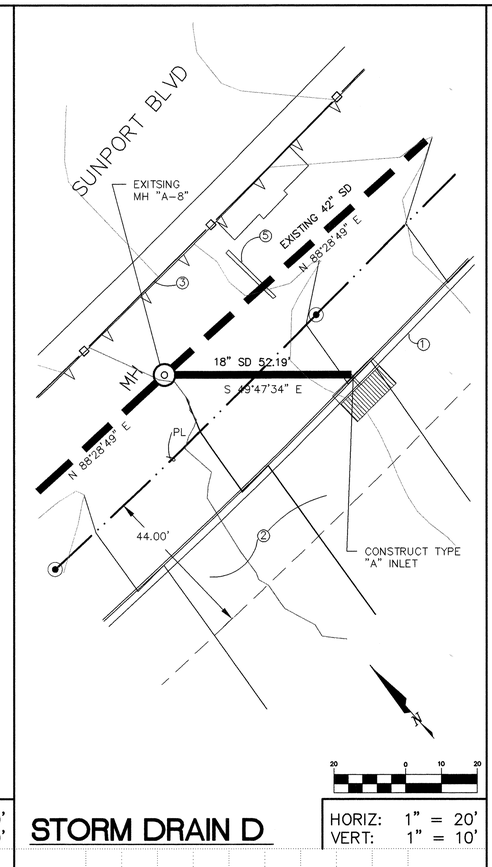

STORM DRAIN D

HORIZ: 1" = 20'
VERT: 1" = 10'

LEGEND

ITEM	EXISTING	PROPOSED
WATERLINE	6" W	6" W
SANITARY SEWER	8" SAS	8" SAS
STORM SEWER	36" SD	24" SD
FIRE HYDRANT		
VALVE		
WATER SERVICE (SINGLE)		
WATER SERVICE (DOUBLE)		
MANHOLE		
CURB		
DROP INLET		
OVERHEAD ELEC	OHE	
UNDERGROUND ELEC, GAS,TEL,TV	UGT	
FLOWLINE ELEV.	FL 0.14	FL 0.14
TOP OF CURB ELEV.	99.3	99.31
SPOT ELEV.	×16.7	16.7
SEWER SERVICE		
RIGHT OF WAY		
POWER POLE (GUYED)	PP	
CHAIN LINK FENCE		
CENTERLINE		
RETAINING WALL		
TOP OF ASPHALT ELEV.	TA 16.2	TA 16.2

KEYED NOTES:

1. 6" CURB & GUTTER BY OTHERS – NOT IN CONTRACT.
2. ASPHALT PAVING BY OTHERS – NOT IN CONTRACT.
3. EXISTING RETAINING WALL.
4. EXISTING CHAIN LINK FENCE.
5. EXISTING SIGN.

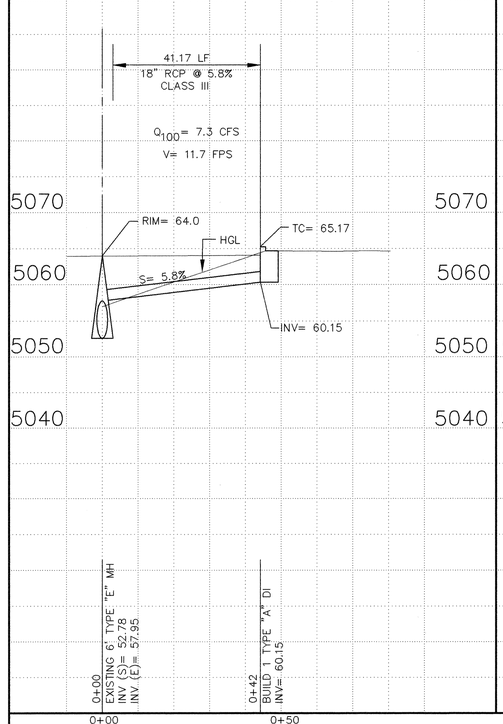

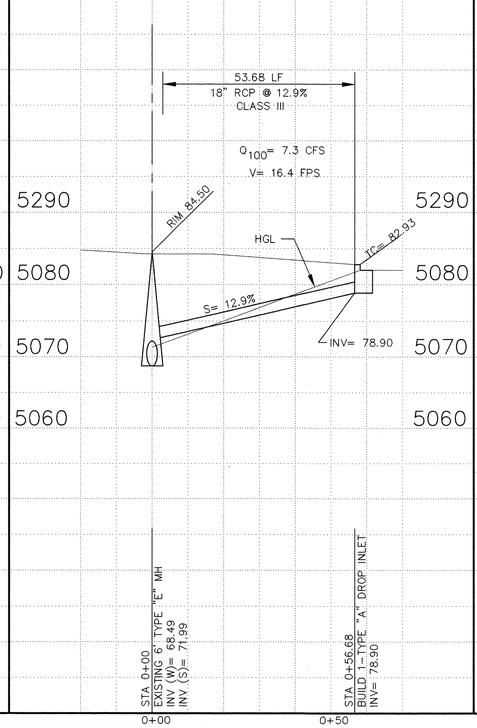

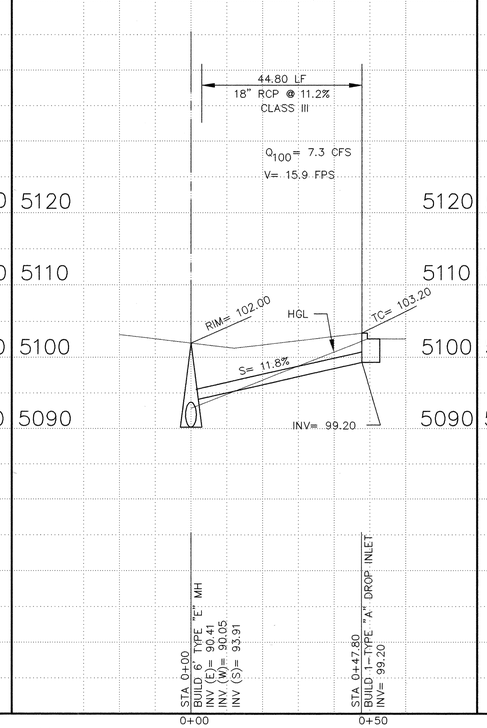

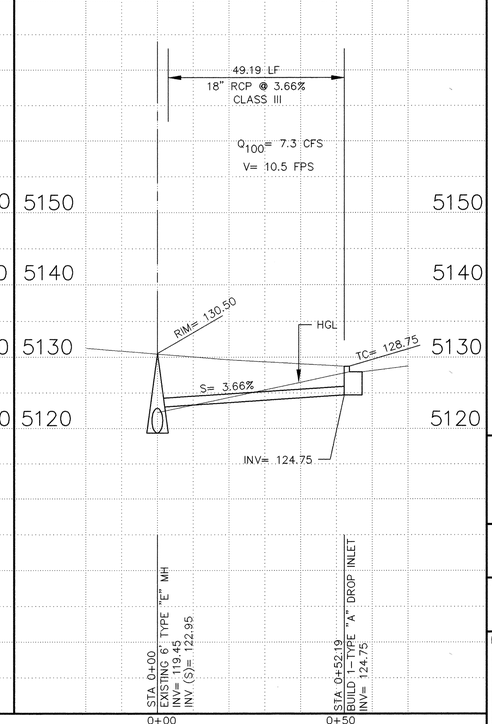

PRIVATE
NOT IN CONTRACT, SHOWN FOR INFORMATION ONLY.

AS BUILT INFORMATION
CONTRACTOR: MARQUEZ SURVEYING CO. INC.
WORK STAKED BY: MARQUEZ SURVEYING CO. INC. DATE 4-1999
INSPECTOR'S ACCEPTANCE BY: DATE
VERIFICATION BY: MARQUEZ SURVEYING CO. INC. DATE 6-28-99
CORRECTED BY: MARQUEZ SURVEYING CO. INC. DATE 8-10-99
MICRO-FILM INFORMATION
RECORDED BY: DATE
NO.

BENCH MARKS
ACS BRASS TABLET (CASTINGS: "LIMBAUGH ENGINEERS INC. STAMPED HV-14 RESET 1974
ACS" SET IN TOP OF A CONCRETE POST FLUSH WITH THE GROUND, LOCATED ABOUT 350 FT SOUTH OF VIEWPOINT ROAD, 0.15 MILES WEST OF YALE BLVD.
ELEVATION= 5259.9

SURVEY INFORMATION
FIELD NOTES

NO.	BY	DATE

ENGINEER'S SEAL
DENNIS A. LORENZ NEW MEXICO 9647 REGISTERED PROFESSIONAL ENGINEER
5-15-98

NO.	DATE	REMARKS	BY

REVISIONS

		DATE
DESIGNED BY	S.M.	3/97
DRAWN BY	A.S.C.	3/97
CHECKED BY	D.A.L.	3/97

BRASHER & LORENZ, INC.
Consulting Engineers
2201 San Pedro NE Building 1 Suite 210
Albuquerque, New Mexico 87110
Ph: 505-888-6088 Fax: 505-888-6188

CITY OF ALBUQUERQUE
PUBLIC WORKS DEPARTMENT
ENGINEERING DEVELOPMENT GROUP

TITLE: SUNPORT PARK
PRIVATE STORM DRAINS A-D

Design Review Committee: APPROVED JUL 29 1998 DESIGN REVIEW COMMITTEE
City Engineer Approval
Last Design Update | Mo./Day/Yr. | Mo./Day/Yr.

City Project No. 5651.82
Zone Map No. M-15
Sheet 10 Of 24

6039-SD.DWG 4/15/98 1"=20'

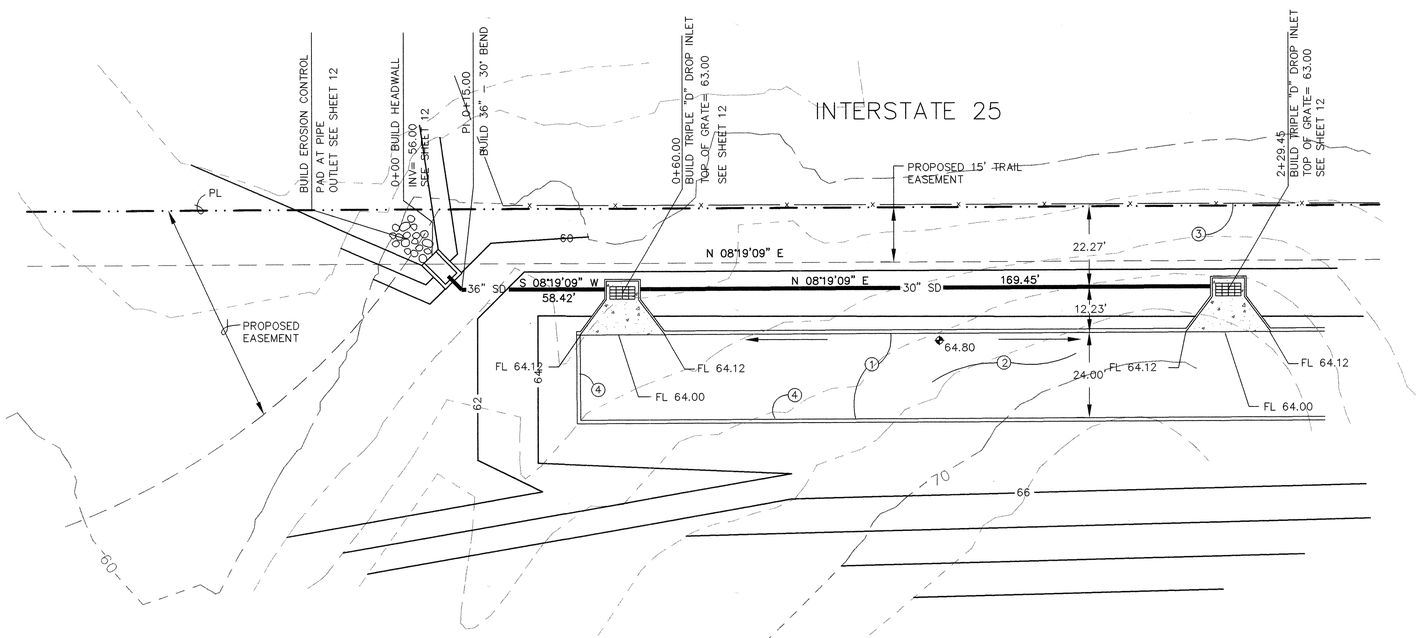

PRIVATE – NOT IN THIS CONTRACT
SHOWN FOR INFORMATION ONLY

STORM DRAIN E

HORIZ: 1" = 20'
VERT: 1" = 10'

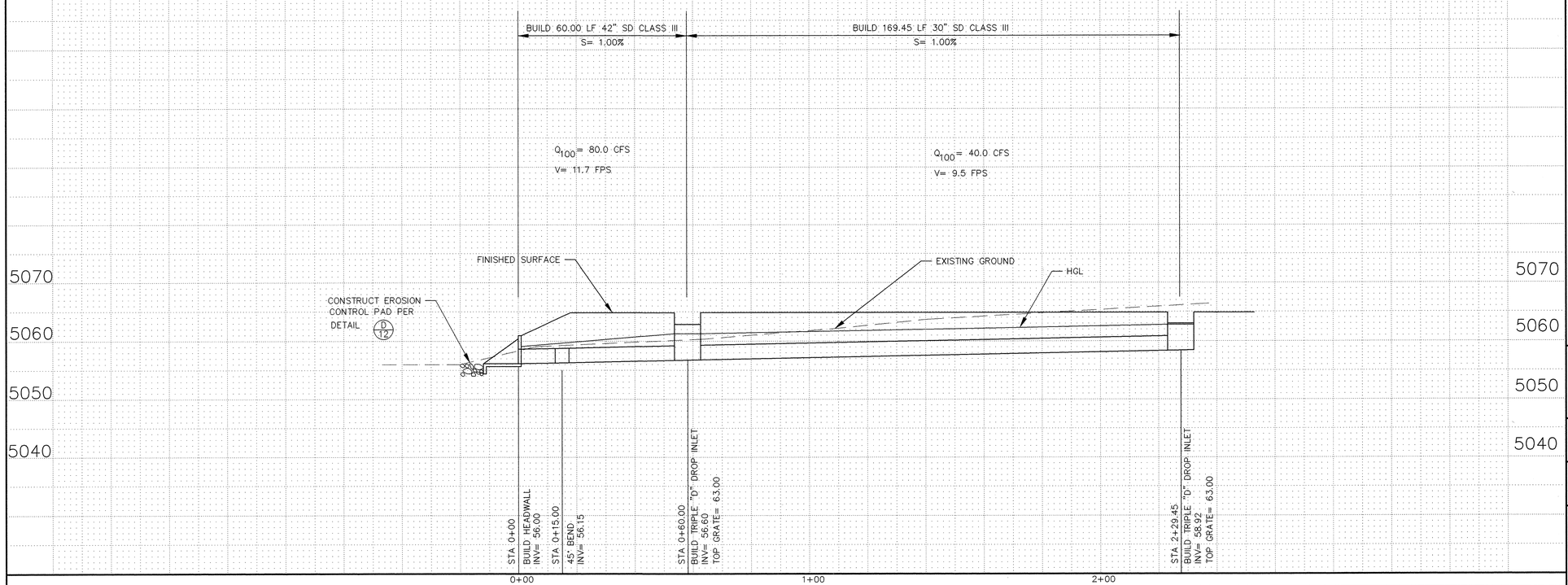

LEGEND

ITEM	EXISTING	PROPOSED
WATERLINE	6" W	6" W
SANITARY SEWER	8" SAS	8" SAS
STORM SEWER	36" SD	24" SD
FIRE HYDRANT		
VALVE		
WATER SERVICE (SINGLE)		
WATER SERVICE (DOUBLE)		
MANHOLE		
CURB		
DROP INLET		
OVERHEAD ELEC	OHE	
UNDERGROUND ELEC, GAS, TEL, TV	UGT	
FLOWLINE ELEV.	FL 0.14	FL 0.14
TOP OF CURB ELEV.	99.3	99.31
SPOT ELEV.	×16.7	16.7
SEWER SERVICE		
RIGHT OF WAY		
POWER POLE (GUYED)	PP	
CHAIN LINK FENCE		
CENTERLINE		
RETAINING WALL		
TOP OF ASPHALT ELEV.	TA 16.2	TA 16.2

KEYED NOTES

1. 6" CONC CURB & GUTTER BY OTHERS – NOT IN CONTRACT.
2. ASPHALT PAVING BY OTHERS – NOT IN CONTRACT.
3. EXISTING CHAIN LINK FENCE.
4. 6" AC CURB BY OTHERS NOT IN CONTRACT.

AS BUILT INFORMATION
CONTRACTOR: Marquez Surveying & Inc. DATE 4-1999
WORK STAKED BY: Marquez Surveying & Inc. DATE
INSPECTOR'S FIELD VERIFICATION BY: Marquez Surveying & Inc. DATE 6-22-99
DRAWING CORRECTED BY: Marquez Surveying & Inc. DATE 8-10-99
MICRO-FILM INFORMATION
RECORDED BY DATE
NO.

BENCH MARKS
ACS BRASS TABLET (CASTINGS: "LIMBAUGH ENGINEERS INC. STAMPED HV-14 RESET 1974 ACS" SET IN TOP OF A CONCRETE POST FLUSH WITH THE GROUND. LOCATED ABOUT 350 FT SOUTH OF VIEWPOINT ROAD, 0.15 MILES WEST OF YALE BLVD.
ELEVATION= 5259.9

SURVEY INFORMATION
FIELD NOTES

NO.	BY	DATE

ENGINEER'S SEAL
DENNIS A. LORENZ NEW MEXICO REGISTERED PROFESSIONAL ENGINEER 5-15-98

NO.	DATE	REMARKS	BY

REVISIONS

DESIGNED BY	S.M	DATE 3/97
DRAWN BY	A.S.C.	DATE 3/97
CHECKED BY	D.A.L.	DATE 3/97

BRASHER & LORENZ, INC.
Consulting Engineers
2201 San Pedro NE Building 1 Suite 210
Albuquerque, New Mexico 87110
Ph: 505-888-6088 Fax: 505-888-6188

CITY OF ALBUQUERQUE
PUBLIC WORKS DEPARTMENT
ENGINEERING DEVELOPMENT GROUP

TITLE: SUNPORT PARK
PRIVATE STORM DRAIN E

Design Review Committee: APPROVED JUL 29 1998 DESIGN REVIEW COMMITTEE
City Engineer Approval
Last Design Update | Mo./Day/Yr. | Mo./Day/Yr.

City Project No. 5651.82 | Zone Map No. M-15 | Sheet 11 Of 24

6039-SD1.DWG 4/15/98 1"=20'

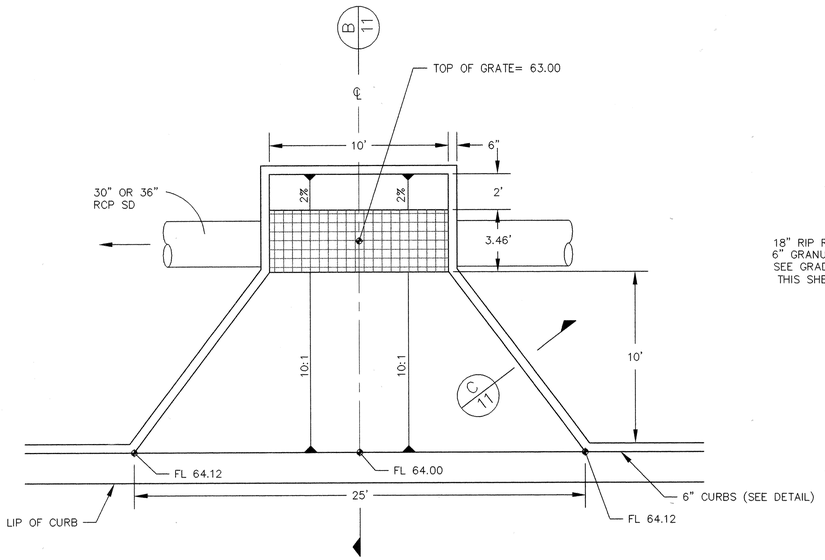

CHANNEL INLET DETAIL (A/12)
SCALE 1 = 40

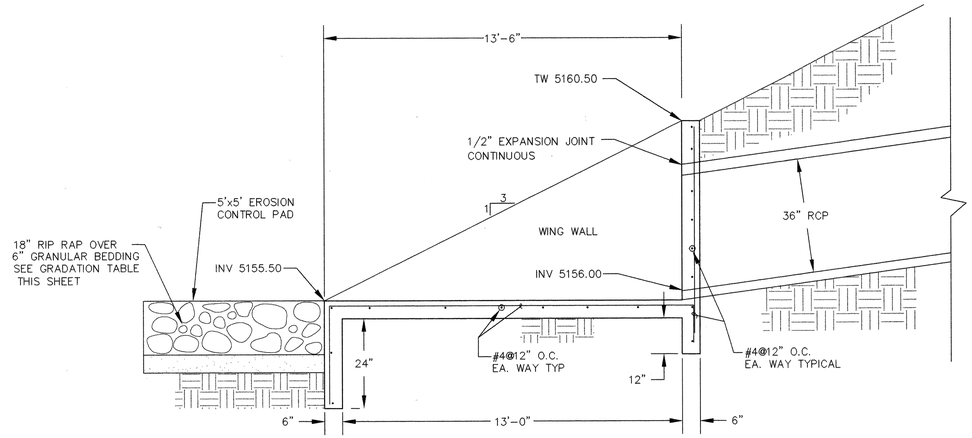

HEADWALL SECTION (D/12)
N.T.S.

NOTE (A):
IF 'R' VALUE IS LESS THAN 50
CONTRACTOR SHALL REPLACE
SUBGRADE WITH UPGRADED SOIL
PER CITY STD SPECIFICATIONS.

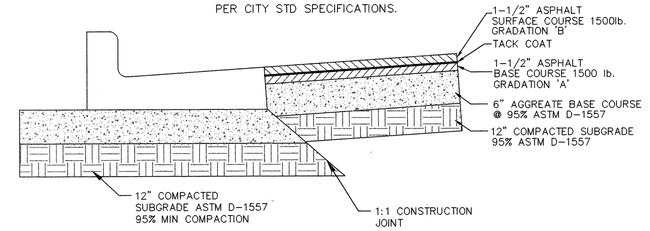

TRANSPORT PAVEMENT SECTION (G/12)
PAVEMENT SECTION MATCHES CITY PROJECT NO. 4044.90 FOR TRANSPORT ST.
NTS

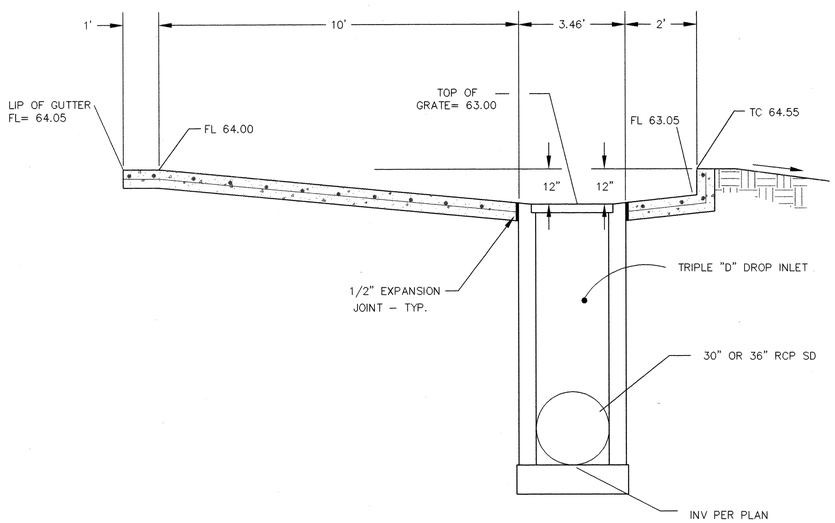

CHANNEL INLET SECTION (B/12)
SCALE 1" = 2'

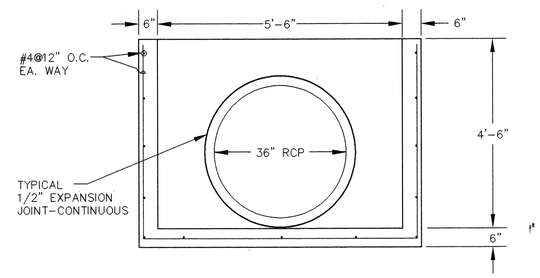

HEADWALL SECTION (E/12)
N.T.S.

NOTE (A):
IF 'R' VALUE IS LESS THAN 50
CONTRACTOR SHALL REPLACE
SUBGRADE WITH UPGRADED SOIL
PER CITY STD SPECIFICATIONS.

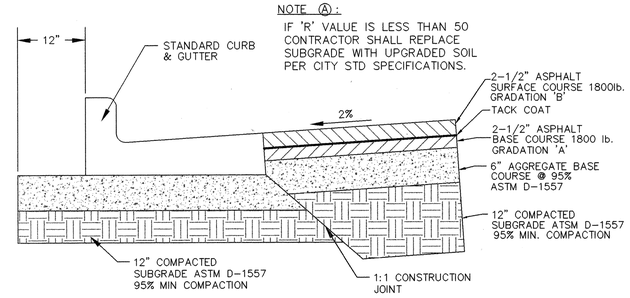

AIRCRAFT PAVEMENT SECTION (H/12)
PAVEMENT SECTION MATCHES CITY PROJECT NO. 4044.90 FOR UNIVERSITY BLVD.
NTS

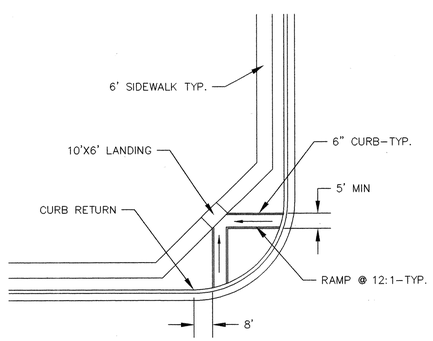

CURB ACCESS RAMP DETAIL (F/12)
N.T.S.

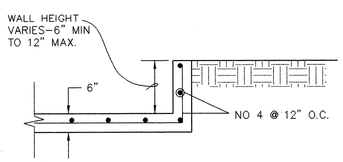

CHANNEL WALL SECTION (C/12)
SCALE 1" = 2'

GRADATION FOR RIP RAP	
MIN DIMENSION	%SMALLER BY WEIGHT
12"	70-100
9"	50-70
6"	35-50
2"	2-10
GRADATION FOR GRANULAR BEDDING	
SIEVE SIZE	%SMALLER BY
12"	90-100
3/4"	20-90
#4	0-20
#16	---
#50	---
#100	---
#200	---

All rip-rap shall be angular rock and free from cracks. No shale, no broken concrete and no cobble will be accepted.

AS BUILT INFORMATION
CONTRACTOR: Marquez Surveying Co. Inc.
WORK STAKED BY: Marquez Surveying Co. Inc. DATE 4-1-1999
INSPECTOR'S ACCEPTANCE BY: DATE
FIELD VERIFICATION BY: Marquez Surveying Co. Inc. DATE 6-22-99
DRAWINGS CORRECTED BY: Marquez Surveying Co. Inc. DATE 8-10-99
MICRO-FILM INFORMATION
RECORDED BY: DATE
NO.

BENCH MARKS
ACS BRASS TABLET CASTINGS: "LIMBAUGH ENGINEERS INC. STAMPED HV-14 RESET 1974 ACS" SET IN TOP OF A CONCRETE POST FLUSH WITH THE GROUND. LOCATED ABOUT 350 FT SOUTH OF VIEWPOINT ROAD, 0.15 MILES WEST OF YALE BLVD.
ELEVATION= 5259.9

SURVEY INFORMATION
FIELD NOTES

NO.	BY	DATE

ENGINEER'S SEAL
DENNIS A. LORENZ NEW MEXICO 9647 REGISTERED PROFESSIONAL ENGINEER
5-15-98

NO.	DATE	REMARKS	BY

REVISIONS

DESIGN		
DESIGNED BY S.M.	DATE 2/97	
DRAWN BY A.S.C.	DATE 2/97	
CHECKED BY D.A.L.	DATE 2/97	

BRASHER & LORENZ, INC.
Consulting Engineers
2201 San Pedro NE Building 1 Suite 210
Albuquerque, New Mexico 87110
Ph: 505-888-6088 Fax: 505-888-6188

CITY OF ALBUQUERQUE
PUBLIC WORKS DEPARTMENT
ENGINEERING DEVELOPMENT GROUP

TITLE: SUNPORT PARK
MISCELLANEOUS DETAILS

Design Review Committee: APPROVED JUL 29 1998 DESIGN REVIEW COMMITTEE
City Engineer Approval
Last Design Update | Mo./Day/Yr. | Mo./Day/Yr.

City Project No. 5651.82 | Zone Map No. M-15 | Sheet 12 Of 26 ~~24~~

6039-DET.DWG 4/15/98 1"=50'

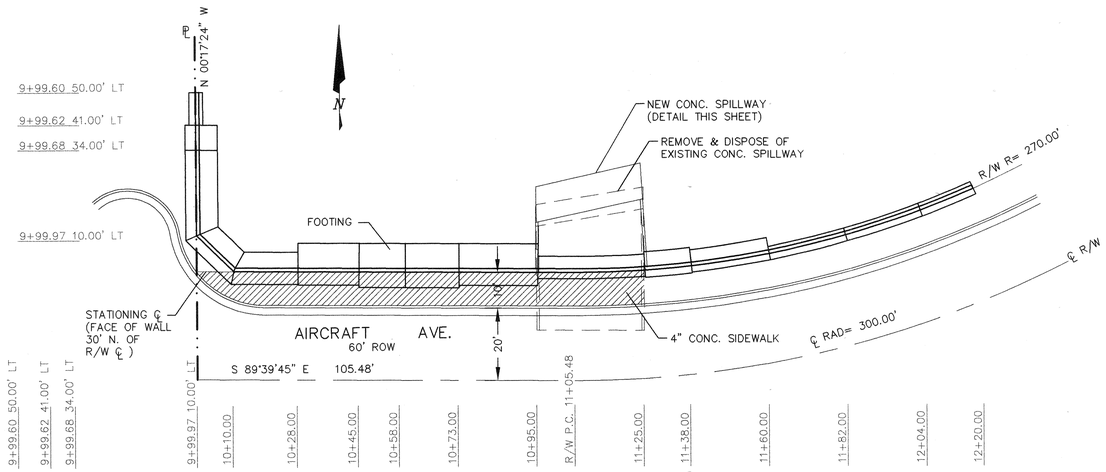

RETAINING WALL – PLAN

SEE PLAN & PROFILE SHEET FOR AIRCRAFT AVE. PAVING

NTS

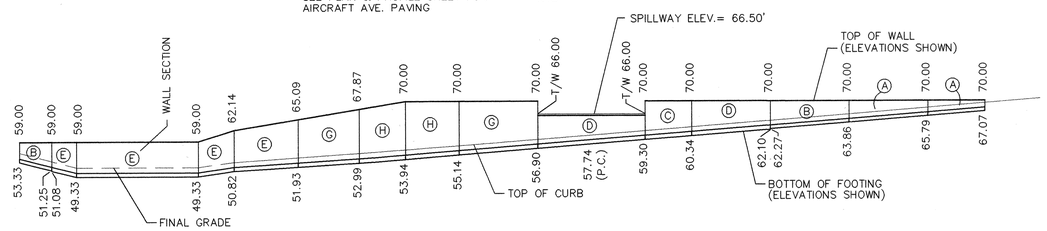

RETAINING WALL – ELEVATION

NTS

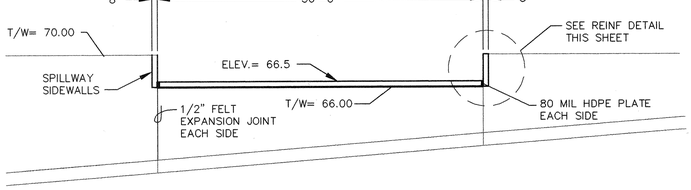

SPILLWAY – ELEVATION

NTS

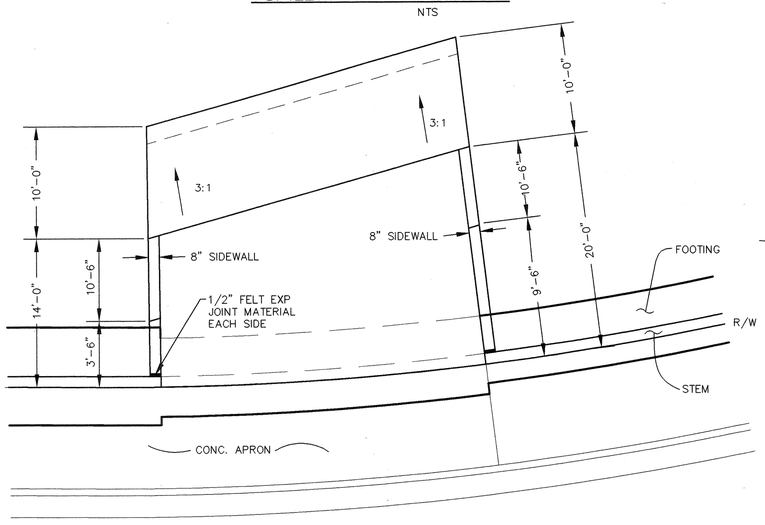

SPILLWAY – PLAN

NTS

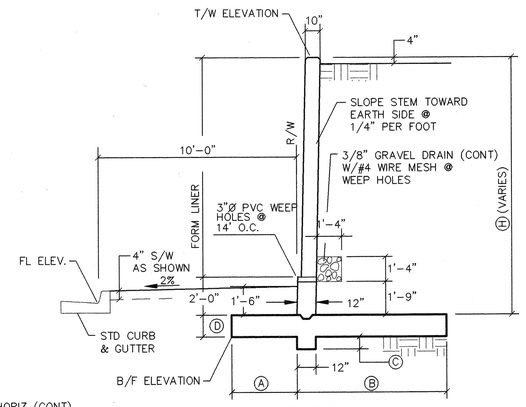

SECTION

NTS

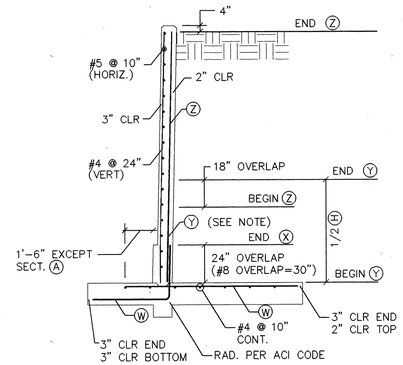

REINFORCEMENT

NTS

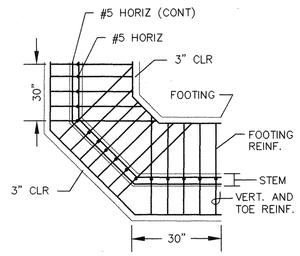

CORNER REINFORCEMENT DETAIL

NTS

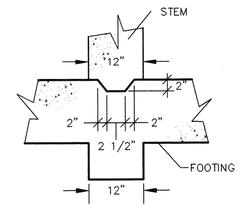

STEM KEY

NTS

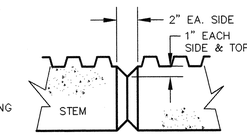

CRACK CONTROL JOINT

NTS

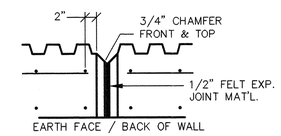

EXPANSION JOINT

NTS

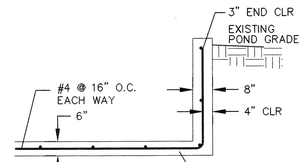

SPILLWAY REINF.

NTS

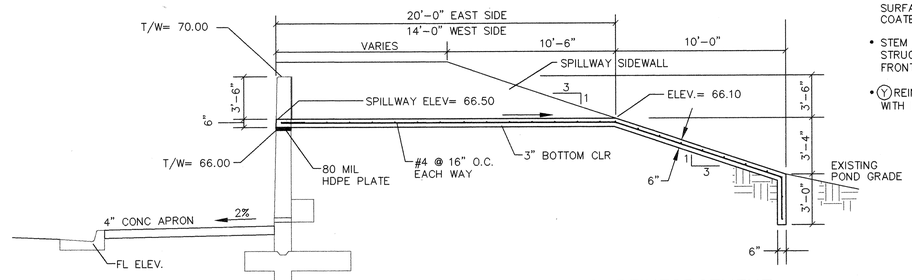

SPILLWAY SECTION AND REINFORCEMENT

NTS

NOTES

- f'_c = 4000 psi; @ 28 DAYS; MAX. AGGREGATE SIZE=3/4"
  f_y = 60,000 psi(ASTM A–615 GR.60)
- FOOTING SUBGRADE AND BASE SHALL BE EXCAVATED TO UNDISTURBED MATERIAL AND BACKFILLED IN 8" LIFTS COMPACTED TO 95% MOD. PROCTOR PER ASTM D–1557
- 1/2" FELT EXPANSION JOINTS SHALL BE INSTALLED AT 30' ON CENTER AND/OR AT SECTION CHANGE.
- ALL CONCRETE VERTICAL SURFACES TO BE BACKFILLED SHALL BE COATED W/EMULSIFIED ASPHALT
- STEM CRACK CONTROL JOINTS ARE TO BE STRUCK OR FORMED @ 10' O.C. ON BACK, FRONT, AND TOP OF STEM
- (Y) REINFORCEMENT MAY BE SUBSTITUTED WITH EXTENSION OF (X) REINFORCEMENT
- WALLS ARE DESIGNED ASSUMING:
  UNIT WEIGHT OF BACKFILL = 115 PCF
  CONCRETE/SOIL COEFF. OF FRICTION = 0.35
  ALLOWABLE SOIL BEARING PRESSURE = 1500 PSF
  ACTIVE PRESSURE = 44 PSF/FT
  SLOPE ACTIVE PRESSURE = 44 PSF/FT
  PASSIVE PRESSURE = 400 PSF/FT
- STEM KEY IS REQUIRED IF STEM IS NOT POURED MONOLITHIC WITH FOOTING
- FRONT FACE OF STEM SURFACE AS INDICATED IN DRAWINGS SHALL BE FORMED USING GREENSTREAK ARCHITECTURAL FORM LINERS PATTERN NO. 367, FRACTURED RIB RUNNING VERTICALLY, AS MFR'D. BY GREENSTREAK PLASTIC PRODUCTS CO., INC., OR EQUIVALENT TO BE APPROVED BY THE ENGINEER. LINER MOCK–UP, FABRICATION, PREPARATION,INSTALLATION, AND REMOVAL TO COMPLY WITH MFR'S. RECOMMENDATIONS.

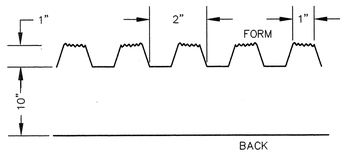

WALL SECTION

	Ⓐ	Ⓑ	Ⓒ	Ⓓ	Ⓔ	Ⓕ	Ⓖ	Ⓗ
Ⓐ	1'–0"	1'–9"	2'–0"	1'–9"	3'–0"	3'–6"	3'–8"	4'–4"
Ⓑ	2'–0"	2'–0"	5'–2"	4'–6"	6'–0"	5'–6"	8'–0"	8'–0"
Ⓒ	–0–	–0–	0'–9"	0'–9"	0'–9"	0'–9"	0'–9"	1'–0"
Ⓓ	1'–0"	1'–0"	1'–2"	1'–2"	1'–2"	1'–2"	1'–2"	1'–2"
Ⓦ	#4@16"	#4@16"	#4@8"	#4@8"	#5@8"	#5@8"	#6@8"	#7@9"
Ⓧ	#4@16"	#4@16"	#4@8"	#4@8"	#5@8"	#5@8"	#7@8"	#8@9"
Ⓨ	#4@16"	#4@16"	#4@8"	#4@8"	#5@8"	#5@8"	#7@8"	#7@9"
Ⓩ	#4@16"	#4@16"	#4@16"	#4@16"	#4@16"	#4@16"	#5@16"	#5@18"

AS BUILT INFORMATION
CONTRACTOR: MARQUEZ SURVEYING & INC. DATE 4-1999
WORK STAKED BY: MARQUEZ SURVEYING & INC. DATE
INSPECTOR'S ACCEPTANCE BY: DATE
FIELD VERIFICATION BY: MARQUEZ SURVEYING & INC. DATE 4-22-99
DRAWINGS CORRECTED BY: MARQUEZ SURVEYING & INC. DATE 8-10-99
MICRO-FILM INFORMATION
RECORDED BY: DATE
NO.

BENCH MARKS
ACS BRASS TABLET (CASTINGS: "LIMBAUGH ENGINEERS INC. STAMPED HV-14 REST 1974 ACS") SET IN TOP OF A CONCRETE POST FLUSH WITH THE GROUND. LOCATED ABOUT 350 FT SOUTH OF VIEWPOINT ROAD, 0.15 MILES WEST OF YALE BLVD.
ELEVATION= 5259.9

SURVEY INFORMATION
FIELD NOTES

NO.	BY	DATE

ENGINEER'S SEAL
PAUL T. BRASHER NEW MEXICO 6281 PROFESSIONAL ENGINEER 5-19-99

NO.	DATE	REMARKS	BY
		REVISIONS	
		DESIGN	

DESIGNED BY DAL DATE 6/98
DRAWN BY MDT DATE 6/98
CHECKED BY DAL DATE 6/98

BRASHER & LORENZ, INC.
Consulting Engineers
2201 San Pedro Building 1 Suite 210
Albuquerque, New Mexico 87110
Ph: 505-888-6088 Fax: 505-888-6188

CITY OF ALBUQUERQUE
PUBLIC WORKS DEPARTMENT
ENGINEERING DEVELOPMENT GROUP

TITLE: SUNPORT PARK
MISCELLANEOUS DETAILS – RETAINING WALL & SPILLWAY

Design Review Committee: APPROVED JUL 29 1998 DESIGN REVIEW COMMITTEE
City Engineer Approval
Last Design Update | Mo./Day/Yr. | Mo./Day/Yr.

City Project No. 5651.82
Zone Map No. M–15
Sheet 13 Of 24

AIRPORT.DWG 7/10/98 1"=1'

SIGNAL NOTES

1. ALL WORK ON THESE PLANS TO BE PERFORMED UNDER THIS CONTRACT SHALL CONFORM TO THE CURRENT NATIONAL ELECTRIC CODE, THE STANDARDS OF THE NATIONAL BOARD OF FIRE UNDERWRITERS FOR ELECTRICAL WIRING AND APPARATUS, AND THE CITY'S TRAFFIC ENGINEERING OPERATIONS THIRD DRAFT SPECIFICATIONS (JUNE 1994).

2. LOCATIONS OF CONDUITS, FOUNDATIONS, CONTROL CABINETS, POLES, PULL BOXES, MANHOLES, AND SPLICE CABINETS SHOWN ON THE PLANS ARE SCHEMATIC AND SHALL BE ADJUSTED IN THE FIELD TO MAXIMIZE CLEAR SPACE AVAILABLE FOR PEDESTRIANS AND WHEELCHAIRS TO COMPLY WITH THE AMERICANS WITH DISABILITIES ACT. THE CONTRACTOR SHALL MEET WITH THE CITY'S TRAFFIC ENGINEERING OPERATIONS PERSONNEL IN THE FIELD AT ALL LOCATIONS TO SPOT EQUIPMENT BEFORE BEGINNING THE WORK. ALL SUCH EQUIPMENT SHALL BE INSTALLED WITHIN THE RIGHT-OF-WAY.

3. THE CONTRACTOR IS WARNED THAT EXISTING CONDUITS MAY CONTAIN AC POWER AND CAUTION SHALL BE EXERCISED IN INTERCEPTING OR INSTALLING CABLE IN EXISTING CONDUIT.

4. THE CONTRACTOR SHALL BORE, DRILL, OR PUSH WHEN CROSSING EXISTING PAVEMENTS AND ANY DRIVEWAYS FOR SIDE STREET CROSSINGS. BEFORE CONDUIT CAN BE BORED, DRILLED, OR PUSHED THE CONTRACTOR SHALL LOCATE ALL EXISTING UTILITIES. THE CONTRACTOR SHALL LOCATE AND EXPOSE GAS LINES WHICH CROSS ANY PROPOSED BORES. THESE EXCAVATIONS SHALL REMAIN OPEN UNTIL AFTER THE BORE IS COMPLETE. CONTRACTOR SHALL REMOVE AND REPLACE IN KIND ANY SIDEWALK OR PAVEMENT REQUIRED TO EXPOSE SUCH LINES. THE CONTRACTOR MAY CUT, TRENCH, AND REPLACE EXISTING PAVEMENT ONLY WHEN APPROVED BY THE PROJECT MANAGER.

5. SPLICING OF COMMUNICATIONS CABLE WILL NOT BE PERMITTED IN PULL BOXES. SPLICING OF COMMUNICATIONS CABLE (CONNECTIONS) WILL BE PERMITTED ONLY AT SPLICE CABINETS OR CONTROLLER CABINETS WITH SPLICE BARS. SPLICING OF TRAFFIC SIGNALS MCC WILL BE PERMITTED IN LARGE PULL BOXES INCLUDING LARGE MEDIAN PULL BOXES. SPLICING OF VIDEO DETECTION COAXIAL CABLE WILL NOT BE PERMITTED FROM THE MASTARM BASE TO THE CONTROLLER CABINET. SPLICING OF OPTICAL DETECTOR CABLE WILL NOT BE PERMITTED FROM THE DETECTOR TO THE CONTROLLER CABINET.

6. ALL LOOP LEAD-IN CABLES SHALL BE TAGGED AT THE CONTROL CABINET TO IDENTIFY EACH CABLE BY PHASE AND LOOP NUMBER. ALL VIDEO DETECTION COAXIAL AND POWER CABLES SHALL BE TAGGED AT THE CONTROL CABINET TO IDENTIFY EACH CABLE BY CAMERA NUMBER AND LOCATION. ALL OPTICAL DETECTOR CABLE SHALL BE TAGGED AT THE CONTROL CABINET TO IDENTIFY EACH BY DIRECTION AND LOCATION.

7. ALL PULL BOXES SHALL BE REINFORCED POLYMER MORTAR HEAVY DUTY TYPE WITH REINFORCED POLYMER MORTAR HEAVY DUTY COVERS. CONCRETE COVERS, STEEL COVERS, AND CONCRETE PULL BOXES WILL NOT BE ACCEPTABLE.

8. THE CONTRACTOR SHALL NOTIFY THE CITY OF ALBUQUERQUE TRAFFIC ENGINEERING OPERATIONS(857-8000) THREE WORKING DAYS IN ADVANCE OF ANY ANTICIPATED WORK ON SIGNALS, LIGHTING, AND POWER SERVICES. TRAFFIC ENGINEERING OPERATIONS PERSONNEL WILL ASSIST THE CONTRACTOR IN FIELD LOCATION OF EQUIPMENT, COLOR CODING OF WIRING, AND MUST BE PRESENT WHEN SIGNALS AND LIGHTING ARE SHUT-OFF OR TURNED ON. THE CONTRACTOR SHALL ALSO NOTIFY THE CITY OF ALBUQUERQUE TRAFFIC ENGINEERING OPERATIONS EACH TIME A TRAFFIC SIGNAL CONTROL DOOR IS OPENED.

9. THE CONTRACTOR SHALL NOTIFY PUBLIC SERVICE COMPANY 30 DAYS IN ADVANCE OF ANTICIPATED POWER SERVICE CONNECTIONS. THE CONTRACTOR SHALL COORDINATE WITH PUBLIC SERVICE COMPANY TO ESTABLISH ELECTRICAL SERVICE IN THE CITY'S NAME. THE CONTRACTOR SHALL PAY THE LOCAL POWER COMPANY ALL COSTS TO PROVIDE ELECTRICAL SERVICE. THIS WORK WILL BE CONSIDERED INCIDENTAL TO CONSTRUCTION.

10. THE CONTRACTOR SHALL REMOVE ALL CONFLICTING SIGNING AND DELIVER TO THE CITY TRAFFIC ENGINEERING YARDS WHEN TRAFFIC SIGNALS ARE PUT INTO OPERATION.

11. LIVE UNUSED CONDUCTORS WILL NOT BE ALLOWED AT MASTARM POLES AND PEDESTAL POLES. ALL SUCH UNUSED CONDUCTORS SHALL BE DISCONNECTED AT THE LARGE PULL BOX ADJACENT TO THE POLE.

12 IF TRENCH WIDTHS LESS THAN 12" ARE PROPOSED BY THE CONTRACTOR, APPROVED COMPACTION METHODS SHALL BE USED DURING BACKFILL TO PREVENT LATENT TRENCH FAILURES. THE CONTRACTOR SHALL USE GROUT OR LEAN FILL AS APPROVED BY THE PROJECT MANAGER IN LIEU OF EARTH BACKFILL.

13. FOR CONDUITS CONTAINING ONLY LOW VOLTAGE COMMUNICATIONS CABLES, THE REQUIREMENTS FOR A SINGLE CONDUCTOR BARE COPPER #8 AWG MAY BE WAIVED WHERE PERMITTED BY THE NATIONAL ELECTRIC CODE.

14. THE CITY OF ALBUQUERQUE TRAFFIC ENGINEERING OPERATIONS PERSONNEL WILL PROVIDE TRAFFIC SIGNAL TIMING PLANS AND WILL PROGRAM TRAFFIC SIGNAL CONTROLLERS.

15. EXISTING CONDUITS TO BE REMOVED OR ABANDONED SHALL HAVE ALL WIRING REMOVED.

16. EXISTING CONDUITS SHALL BE REPAIRED, ADJUSTED, OR REPLACED AS DIRECTED BY THE PROJECT MANAGER WHERE ELECTRICAL PILLBOXES OR TRAFFIC MANHOLES ARE INSTALLED OR REPLACED.

17. CONTRACTOR SHALL COIL EXCESS INTERCONNECT CABLE AT ALL NEW OR EXISTING TRAFFIC MANHOLES BETWEEN SPLICE CABINET OR CONTROL CABINETS WITH SPLICE BARS. IF MORE THAN ONE MANHOLE EXISTS BETWEEN SPLICE CABINETS OR CONTROL CABINETS WITH SPLICE BARS, THEN COILING IS ONLY REQUIRED AT ONE OF THE MANHOLES. THE FOLLOWING QUANTITIES OF COMMUNICATION CABLE SHALL BE COILED:
    12 PAIR - 50 FT.
    25 PAIR - 50 FT.
    50 PAIR - 25 FT.
    75 PAIR - 25 FT.

18. THE CONTRACTOR SHALL PROVIDE OFF-DUTY POLICE OFFICERS TO DIRECT TRAFFIC WHEN SIGNALS ARE TURNED OFF.

19. ALL DATA SHOWN HEREIN CONCERNING EXISTING UTILITIES HAS BEEN OBTAINED FROM "AS-BUILT" DRAWINGS AND FROM FIELD OBSERVATIONS WHICH MAY OR MAY NOT BE ACCURATE. THE CONTRACTOR WILL BE RESPONSIBLE FOR EXPLORATORY TRENCHING. IF NECESSARY, TO MORE SPECIFICALLY LOCATE UTILITY LINES. COST OF LOCATING UTILITY LINES INCLUDING EXPLORATORY TRENCHING WILL BE CONSIDERED INCIDENTAL TO CONSTRUCTION.

20. THE CONTRACTOR SHALL VIDEO TAPE THE EXISTING TRAFFIC SIGNAL EQUIPMENT IN VHS FORMAT AND REVIEW THE TAPE WITH CITY OF ALBUQUERQUE TRAFFIC ENGINEERING OPERATIONS PERSONNEL PRIOR TO BEGINNING ANY REMOVALS OF SIGNAL EQUIPMENT. THE TAPE SHALL BECOME THE PROPERTY OF THE CITY AND MAY BE USED TO RESOLVE ANY QUESTIONS RELATED TO THE ORIGINAL CONDITION AND QUALITY OF EXISTING EQUIPMENT. THE EXISTING TRAFFIC SIGNAL EQUIPMENT INCLUDING POLES, CONTROLLER CABINETS, CONFLICT MONITORS, AND DETECTORS SHALL BE DELIVERED TO THE CITY OF ALBUQUERQUE TRAFFIC ENGINEERING YARD ON PINO ROAD NE.

21. INTERCONNECT CABLES SHALL COMPLY WIHT REA SPECIFICATION PE-22. INTERCONNECT CABLE SHALL CONTAIN THE NUMBER OF WIRE PAIRS SHOWN ON THE PLANS AND THE INDIVIDUAL CONDUCTORS SHALL BE 19 AWG SOLID.

22. ALL SIGNAL ASSEMBLIES, PEDESTRIAN SIGNALS, PEDESTRIAN PUSH BUTTONS, CABINETS, AND FITTINGS SHALL COMPLY WITH THE CITY OF ALBUQUERQUE TYPE AND COLOR REQUIREMENTS.

INCIDENTAL ITEMS *

1. REMOVAL OF EXISTING PULL BOXES, CONDUITS, OR OTHER SIGNAL EQUIPMENT FOR INSTALLATION OF NEW SIGNAL EQUIPMENT.

2. CABLE TESTING AND DIAGRAMS.

3. BORING, DRILLING, PUSHING, AND TRENCHING, INCLUDING REMOVAL AND REPLACEMENT OF PAVEMENT, SIDEWALKS, DRIVE PADS, VALLEY GUTTERS, WHEELCHAIR RAMPS, CURB & GUTTER, AND LANDSCAPING (INCLUDING SPRINKLERS). FOR INSTALLATION OF PULL BOXES, CONDUITS, AND SIGNAL FOUNDATIONS, EXCEPT AS NOTED ON THE PLANS.

4. LOCATION OF UTILITY LINES INCLUDING EXPLORATORY TRENCHING AND EXPOSING OF GAS LINES WHEN BORING.

5. DESIGN, MATERIALS, INSTALLATION AND REMOVAL OF SAFETY BARRIER FOR SHIELDING EQUIPMENT OR MATERIAL.

6. APPRISING PUBLIC THROUGH THE LOCAL NEWS MEDIA.

7. HAULING OF MATERIAL TO BE DISPOSED TO CITY LANDFILL.

8. REMOVAL, SALVAGE, AND TRANSPORTATION OF EXISTING SIGNAL EQUIPMENT TO THE TRAFFIC ENGINEERING OPERATIONS YARD.

9. LEAN FILL FOR CONDUIT TRENCHES.

10. PULL BOX ADJUSTMENT TO GRADE.

11. OFF-DUTY POLICE OFFICER FOR TRAFFIC CONTROL.

12. REMOVAL AND REPLACEMENT IN KIND OR BETTER OF LANDSCAPING INCLUDING SPRINKLERS, FOR INSTALLATION OF PULL BOXES, CONDUITS AND SIGNAL FOUNDATIONS.

13. COST FOR PUBLIC SERVICE COMPANY TO PROVIDE ELECTRICAL SERVICE.

* ITEMS LISTED ARE ONLY A GENERAL DESCRIPTION OF THE REQUIRED WORK AND MATERIALS, AND MAY NOT BE COMPLETE. THIS LIST DOES NOT INCLUDE ANY INCIDENTAL WORK OR MATERIALS REQUIRED BY THE SPECIAL PROVISIONS SERIALS (STANDARD DETAILS), SUPPLEMENTAL SPECIFICATIONS, OR THE STANDARD SPECIFICATIONS.

AS-BUILT INFORMATION
CONTRACTOR Marquez Surveying Co. Inc. DATE
WORK STAKED BY Marquez Surveying Co. Inc. DATE 4-1998
INSPECTOR'S ACCEPTANCE BY DATE
FIELD VERIFICATION BY Marquez Surveying Co. Inc. DATE 6-22-98
DRAWINGS CORRECTED BY Marquez Surveying Co. Inc. DATE 5-20-98
MICRO-FILM INFORMATION
RECORDED BY DATE
NO.

BENCH MARKS
ACS BRASS TABLET CASTINGS: "LIMBAUGH ENGINEERS INC. STAMPED HV-14 RESET 1974 ACS" SET IN TOP OF A CONCRETE POST FLUSH WITH THE GROUND. LOCATED ABOUT 350 FT SOUTH OF VIEWPOINT ROAD. 0.15 MILES WEST OF YALE BLVD.
ELEVATION= 5259.9

SURVEY INFORMATION
FIELD NOTES

NO.	BY	DATE

ENGINEER'S SEAL
DENNIS A. LORENZ NEW MEXICO REGISTERED PROFESSIONAL ENGINEER 9878
5-15-98

NO.	DATE	REMARKS	BY
		REVISIONS	
		DESIGN	

DESIGNED BY COA DATE 8-97
DRAWN BY COA DATE 8-97
CHECKED BY COA DATE 8-97

CITY OF ALBUQUERQUE
PUBLIC WORKS DEPARTMENT
ENGINEERING DEVELOPMENT GROUP

TITLE: SUNPORT PARK TRAFFIC SIGNAL NOTES & LEGEND

DESIGN REVIEW COMMITTEE: APPROVED JUL 29 1998 DESIGN REVIEW COMMITTEE
CITY ENGINEER APPROVAL
LAST DESIGN UPDATE | MO./DAY/YR. | MO./DAY/YR.

CITY PROJECT NO. 5651.82 | ZONE MAP NO. M-15 | SHEET 14 OF 24

TS-1A.DWG 4/15/98 1"=10'

1 inch = 20 ft.

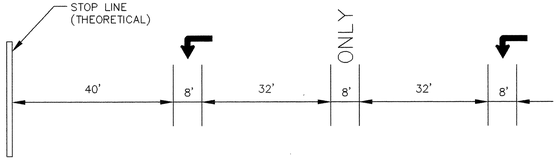

TURN LANE STRIPING DETAIL

NTS

ABBREVIATIONS

MA1	MASTARM NUMBER
PPB1	PEDESTRIAN PUSH BUTTON NUMBER
CC1	CONTROL CABINET NUMBER
PB1	PULL BOX NUMBER (SIGNALS)
PBS1	PULL BOX NUMBER (POWER)
PBC1	PULL BOX NUMBER (INTERCONNECT)
DL1(1)	THEORETICAL DETECTOR PHASE #
1A	SIGNAL HEAD NUMBER
P1	PEDESTRIAN SIGNAL NUMBER
PB	BACKPLATE
EC	EXTENDED CALL LOOP DETECTOR
SC1	SPLICE CABINET NUMBER
MH1	MANHOLE NUMBER
PP1	PEDESTAL POLE NUMBER
MCC	MULTI. CONDUCTOR CABLE

LEGEND

PROPOSED	EXISTING	
	PB	PULLBOX
	MH	MANHOLE
	1M1	SIGNAL HEAD
		OPITCAL DETECTOR
		CAMERA
		PEDESTAL W/PED SIGNAL
		MASTARM
		CONDUIT RUN
		LIGHT POLE
		CURB & GUTTER
1		CONDUIT RUN ID.

KEYED NOTES

1. REMOVE EXISTING PULLBOX & SPLICE EXISTING CONDUIT
2. INSTALL NEW 30' MASTARM – TYPE III STANDARD SEE SHEET 18 (ALB – 3-30-40)
3. INSTALL NEW SIGNAL HEAD
4. INSTALL NEW CAMERA (ECONOLITE) OR EQUIVALENT WHICH IS COMPATIBLE WITH EXISTING SYSTEM. PROVIDE VIDEO CABLES FROM CAMERA TO CONTROLLER
5. REMOVE EXISTING 3 SECTION SIGNAL HEAD INSTALL NEW 5 SECTION HEAD. RELOCATE 3 SECTION HEAD TO 4B.
6. INSTALL NEW 3 SECTION SIGNAL HEAD ON EXIST PEDESTAL
7. INSTALL NEW CONDUIT
8. INSTALL NEW PEDESTRIAN SIGNAL AND PUSH BUTTON.
9. INSTALL NEW DETECTOR FOR PHASE 4. – NEW AMPLIFIER REQUIRED SEE SHEET 17.
10. OBLITERATE EXISTING STRIPING
11. NEW STRIPING (4" REFLECTORIZED WHITE)
12. NEW STOP BAR (24" REFLECTORIZED WHITE)
13. EXISTING STOP BAR
14. EXISTING CROSSING STRIPING
15. NEW CROSSING STRIPING (12" REFLECTORIZED WHITE)
16. EXISTING LANE STRIP TO REMAIN
17. NEW PAVEMENT MARKING
18. REMOVE EXISTING MCC5, REPLACE WITH MCC7
19. INSTALL NEW CONDUIT
20. INSTALL NEW 3 SECTION SIGNAL HEAD ON EXISTING MASTARM
21. INSTALL NEW MASTARM FOUNDATION – SEE SHEET 21

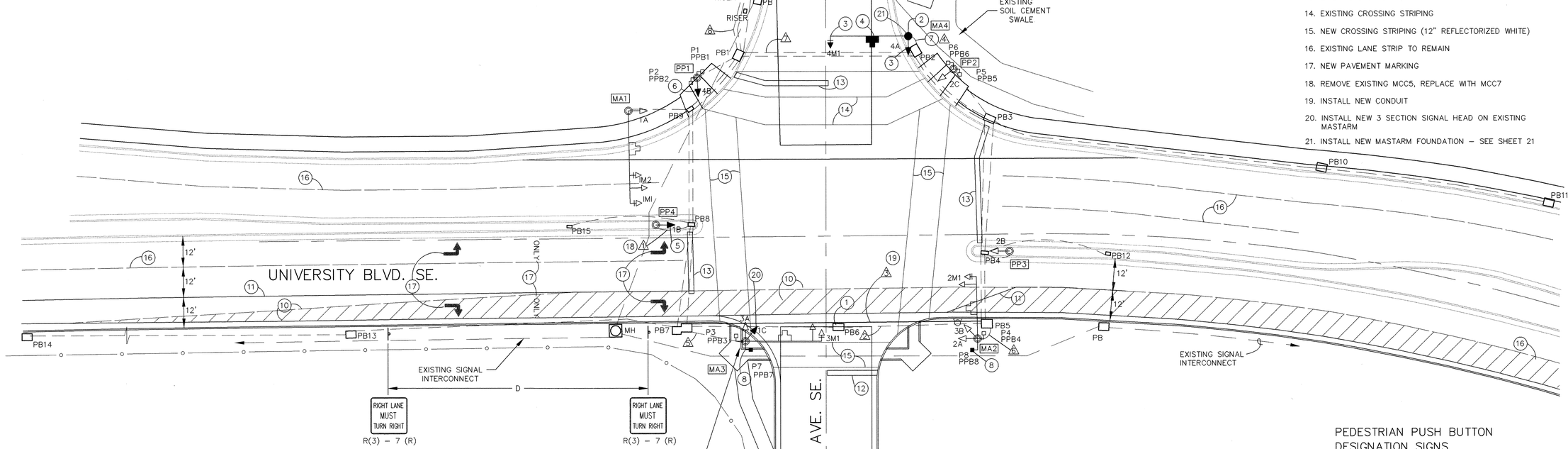

NOTE:

CONTRACTOR SHALL VERIFY EXACT POSITION OF EXISTING MASTARM MA3 (AT NW RETURN) AND DETERMINE CAPATIBILITY WITH PROPOSED STREET AND SIDEWALK IMPROVEMENTS. THE PROJECT ENGINEER SHALL BE NOTIFIED TO DETERMINE IF RELOCATION OF THE MASTARM IS REQUIRED.

TRAFFIC SIGNAL CONFIGURATION BY APPROACH

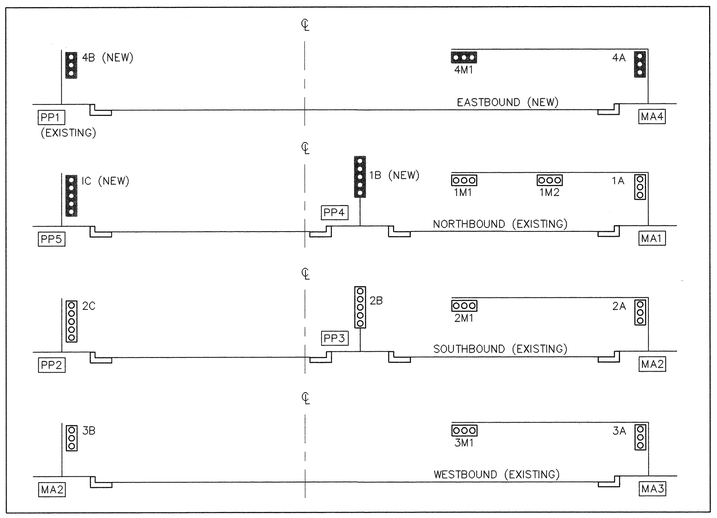

SIGNAL PHASING

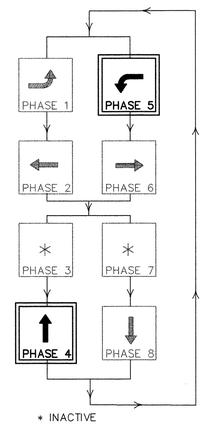

* INACTIVE

TYPICAL SIGNAL FACE LENS ARRANGEMENTS

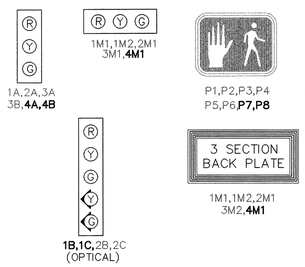

PEDESTRIAN PUSH BUTTON DESIGNATION SIGNS

PPB 1,3,5,**8 R10 4b L**

PPB 2,4,6,**7 R10 4b R**

FLASH CONDITION *

RED HEADS, 1A,1B,1M1,1M2
3A,3B,3M1
2A,2B,2C,2M1
4A,4B,4M1

INITIALIZATION

ALL RED, THEN PHASE 2 AND 6 GREEN

AS BUILT INFORMATION

CONTRACTOR: Marquez Surveying Co. Inc.
WORK STAKED BY: Marquez Surveying & Inc. DATE 4-1999
INSPECTOR'S FIELD STAKING BY: DATE
VERIFICATION BY: Marquez Surveying Co. Inc. DATE 6-22-99
CORRECTIONS COMPLETED BY: Marquez Surveying Co. Inc. DATE 8-10-99
MICRO-FILM INFORMATION
RECORDED BY: DATE
NO.

BENCH MARKS

ACS BRASS TABLET CASTINGS: "LIMBAUGH
ENGINEERS INC. STAMPED HV-14 RESET 1974
ACS" SET IN TOP OF A CONCRETE POST
FLUSH WITH THE GROUND, LOCATED ABOUT
350 FT SOUTH OF VIEWPOINT ROAD, 0.15
MILES WEST OF YALE BLVD.
ELEVATION= 5259.9

SURVEY INFORMATION

FIELD NOTES

NO.	BY	DATE

ENGINEER'S SEAL

DESIGN A. SANCHEZ REGISTERED PROFESSIONAL ENGINEER 5-15-98

NO.	DATE	REMARKS	BY

REVISIONS

DESIGN

DESIGNED BY D.A.L. DATE 3/98
DRAWN BY A.S.C. DATE 3/98
CHECKED BY D.A.L. DATE 3/98

BRASHER & LORENZ, INC.
Consulting Engineers
2201 San Pedro NE Building 1 Suite 210
Albuquerque, New Mexico 87110
Ph: 505-888-6088 Fax: 505-888-6188

CITY OF ALBUQUERQUE
PUBLIC WORKS DEPARTMENT
ENGINEERING DEVELOPMENT GROUP

TITLE: SUNPORT PARK
AIRCRAFT/UNIVERSITY
SIGNAL INSTALLATION SIGNING & STRIPING PLAN

Design Review Committee: APPROVED JUL 29 1998 DESIGN REVIEW COMMITTEE

City Engineer Approval

Last Design Update | Mo./Day/Yr. | Mo./Day/Yr.

City Project No. 5651.82 | Zone Map No. M-15 | Sheet 15 Of 24

6039-11.DWG 4/15/98 1"=20'

CONDUIT AND CONDUCTOR REQUIREMENTS

CONDUIT LENGTH, SIZE, AND TYPE						CONDUIT FILL BY CONTRACTOR LENGTH AND TYPE									
RUN ID ##	SIZE/LENGTH 1"	2"	3"	TYPE	REMARKS	MCC 5 (# @ FT)	MCC 7 (# @ FT)	MCC 20 (# @ FT)	SCC #2 (# @ FT)	SCC #8 (# @ FT)	CC #6 (# @ FT)	CC #12 (# @ FT)	OPTICOM (# @ FT)	VIDEO POWER (# @ FT)	VIDEO COAXIAL (# @ FT)
1 *		15		REC	PB8 TO PP4		1 @ 20								
2 *			130	REC	PB5 TO PB7	1 @ 135		2 @ 135							
3		130		REC	PB5 TO PB7	1 @ 135									
4			10	REC	PB2 TO MA4	2 @ 15								1 @ 15	1 @ 15
5 *		20		REC	PB7 TO MA3	2 @ 25	1 @ 25								
6 *			10	REC	PB5 TO MA2 (EXIST)	2 @ 15									
7 *		70		REC	PB1 TO PB2									1 @ 80	1 @ 80
8 *			25	REC	PB1 TO CONT.									1 @ 35	1 @ 35
MA2					BASE TO PPB8	1 @ 5									
MA2					BASE TO PB	1 @ 5									
MA3					BASE TO PPB7	1 @ 5									
MA3					BASE TO 1C		1 @ 15								
MA4					BASE TO 4M1	1 @ 50									
MA4					BASE TO 4A	1 @ 15									
MA4					BASE TO CAM4										1 @ 50
PP1					BASE TO 4B	1 @ 15									
PP4					BASE TO 1B		1 @ 15								

ABBREVIATIONS

CC 6	COMMUNICATION CABLE–6 PAIR
CC 12	COMMUNICATION CABLE–12 PAIR
MA	MASTARM
MCC	MULTI CONDUCTOR CABLE
PB	PULL BOX
PP	PEDESTAL POLE
PPB	PEDESTRIAN PUSH BUTTON
REC	RIGID ELECTRIC CONDUIT
SCC	SINGLE CONDUCTOR CABLE
CAM	VIDEO CAMERA
*	EXISTING CONDUIT RUN

AS–BUILT INFORMATION

CONTRACTOR Marquez Surveying Co. Inc. DATE
SURVEYED BY
STAKED BY Marquez Surveying Co. Inc. DATE 4-1999
INSPECTOR'S ACCEPTANCE BY DATE
FIELD VERIFICATION BY Marquez Surveying Co. Inc. DATE 6-22-99
DRAWINGS CORRECTED BY Marquez Surveying Co. Inc. DATE 8-26-99

MICRO–FILM INFORMATION

RECORDED BY: DATE
NO.

BENCH MARKS

ACS BRASS TABLET CASTINGS: "LIMBAUGH ENGINEERS INC. STAMPED HV–14 RESET 1974 ACS" SET IN TOP OF A CONCRETE POST FLUSH WITH THE GROUND. LOCATED ABOUT 350 FT SOUTH OF VIEWPOINT ROAD, 0.15 MILES WEST OF YALE BLVD.
ELEVATION= 5259.9

SURVEY INFORMATION

FIELD NOTES

NO.	BY	DATE

ENGINEER'S SEAL

DENNIS A. FOREMAN NEW MEXICO 9674 REGISTERED PROFESSIONAL ENGINEER
5-15-98

NO.	DATE	REMARKS	BY
		REVISIONS	
		DESIGN	

DESIGNED BY COA DATE 8–97
DRAWN BY COA DATE 8–97
CHECKED BY COA DATE 8–97

CITY OF ALBUQUERQUE
PUBLIC WORKS DEPARTMENT
ENGINEERING DEVELOPMENT GROUP

TITLE: SUNPORT PARK
TRAFFIC SIGNAL CABLES & CONDUITS
VIDEO DETECTION VERSION

DESIGN REVIEW COMMITTEE: APPROVED JUL 29 1998 DESIGN REVIEW COMMITTEE

CITY ENGINEER APPROVAL

LAST DESIGN UPDATE MO./DAY/YR. MO./DAY/YR.

CITY PROJECT NO.	ZONE MAP NO.	SHEET	OF
5651.82	M–15	16	26 ~~24~~

TS–4A.DWG 4/15/98 1"=10'

DETECTOR LOOPS

LOOP ID	VEHICLE DETECTOR MODE	CALL	UNIT #	CHANNEL	LOOP TYPE	LOOP DIMENSIONS L	W	S	T	LOOP WIRE	PAVEMENT SAWCUT

VIDEO DETECTION IS REQUIRED FOR THIS INTERSECTION

DETECTOR RACK ASSIGNMENTS

UNIT NUMBER →	POWER SUPPLY	1	2	3	4	5	6	7	8	9	10	11	12	13	14	15	16	17	18
CHANNEL 1 →		ø1	ø2	ø6	ø2 EC	ø3	ø4	ø8	ø4 EC	DUAL LEFT ø1	DUAL LEFT ø3	SD 1	SD 3	SD 5	SD 7	SD 9	PED ISOLATION	OPTICOM 1	OPTICOM 3
CHANNEL 2 →		ø5	ø2	ø6	ø6 EC	ø7	ø4	ø8	ø8 EC	DUAL LEFT ø5	DUAL LEFT ø7	SD 2	SD 4	SD 6	SD 8	SD 10		OPTICOM 2	OPTICOM 4
DETECTOR MODULE REQUIRED →	*				✓**												✓	✓	✓

* INCIDENTAL TO CONSTRUCTION

** INSTALL AMPLIFIER CARD

FUNCTION CHART – 115 VOLT CIRCUIT 1/

CONDUCTOR			RING 1 – MULTI CONDUCTOR CABLE 20		RING 2 – MULTI CONDUCTOR CABLE 20 2/	
CONDUCTOR NUMBER	BASE COLOR	TRACER	FUNCTION	FIELD CONNECTION	FUNCTION	FIELD CONNECTION
1	BLACK	–	SPARE	SPARE	SPARE	SPARE
2	WHITE	–	SPARE	SPARE	SPARE	SPARE
3	RED	–	PHASE 1 RED	SPARE	**PHASE 5 RED**	**SPARE**
4	GREEN	–	PHASE 1 GREEN	GREEN LEFT TURN ARROW 2B, 2C	**PHASE 5 GREEN**	**GREEN LEFT TURN ARROW 1B, 1C**
5	ORANGE	–	PHASE 1 YELLOW	YELLOW LEFT TURN ARROW 2B, 2C	**PHASE 5 YELLOW**	**YELLOW LEFT TURN ARROW 1B, 1C**
6	BLUE	–	SPARE	SPARE	SPARE	SPARE
7	WHITE	BLACK	SPARE	SPARE	SPARE	SPARE
8	RED	BLACK	PHASE 2 RED	RED BALL 1A, 1B, 1M1, 1M2	PHASE 6 RED	RED BALL 2A, 2B, 2C, 2M1
9	GREEN	BLACK	PHASE 2 GREEN	GREEN BALL 1A, 1B, 1M1, 1M2	PHASE 6 GREEN	GREEN BALL 2A, 2B, 2C, 2M1
10	ORANGE	BLACK	PHASE 2 YELLOW	YELLOW BALL 1A, 1B, 1M1, 1M2	PHASE 6 YELLOW	YELLOW BALL 2A, 2B, 2C, 2M1
11	BLUE	BLACK	PHASE 2 WALK	PEDESTRIAN WALK P1, P6	PHASE 6 WALK	SPARE
12	BLACK	WHITE	PHASE 2 DON'T WALK	PEDESTRIAN DON'T WALK P1, P6	PHASE 6 DON'T WALK	SPARE
13	RED	WHITE	PHASE 3 RED	SPARE	PHASE 7 RED	SPARE
14	GREEN	WHITE	PHASE 3 GREEN	SPARE	PHASE 7 GREEN	SPARE
15	BLUE	WHITE	PHASE 3 YELLOW	SPARE	PHASE 7 YELLOW	SPARE
16	**BLACK**	**RED**	**PHASE 4 RED**	**RED BALL 4A, 4B, 4M1**	PHASE 8 RED	RED BALL 3A,3B,3M1
17	**WHITE**	**RED**	**PHASE 4 GREEN**	**GREEN BALL 4A, 4B, 4M1**	PHASE 8 GREEN	GREEN BALL 3A,3B,3M1
18	**ORANGE**	**RED**	**PHASE 4 YELLOW**	**YELLOW BALL 4A, 4B, 4M1**	PHASE 8 YELLOW	YELLOW BALL 3A,3B,3M1
19	**BLUE**	**RED**	**PHASE 4 WALK**	**PEDESTRIAN WALK P4, P5**	PHASE 8 WALK	PEDESTRIAN WALK P2, P3
20	**RED**	**GREEN**	**PHASE 4 DON'T WALK**	**PEDESTRIAN DON'T WALK P4, P5**	PHASE 8 DON'T WALK	PEDESTRIAN DON'T WALK P2, P3

FUNCTION CHART – 24 VOLT CIRCUIT 3/

MULTI CONDUCTOR CABLE 5

CONDUCTOR NUMBER	BASE COLOR	FUNCTION	FIELD CONNECTION
1	BLACK	PHASE 2 PPB	PPB2 & PPB5
2	WHITE	COMMON	PPB1 THRU PPB6
3	RED	PHASE 4 PPB	PPB4 & PPB6
4	GREEN	PHASE 6 PPB	PPB7 & PPB8
5	ORANGE	PHASE 8 PPB	PPB1 & PPB3

NOTES:

1/ IDENTIFY CONDUCTORS LISTED AS "115 VOLTS"

2/ WRAP RING 2 CABLE AT EACH SPLICE POINT WITH COLORED ELECTRICAL TAPE. THE IDENTIFICATION MARKING SHALL BE PROVIDED ON EACH RING 2 CABLE AT EACH SPLICE BOX AND LOCATED 6" BACK FROM THE END.

3/ IDENTIFY CONDUCTORS LISTED AS "PPB – LOW VOLTAGE" AT EACH SPLICE POINT. FIVE (5) CONDUCTOR CABLE SHALL BE 24 VOLTS AND USED FOR PUSH BUTTONS ONLY.

AS-BUILT INFORMATION
CONTRACTOR: MARQUEZ SURVEYING CO. INC. DATE
STAKED BY: MARQUEZ SURVEYING CO. INC. DATE 4-1999
INSPECTOR'S ACCEPTANCE BY: DATE
FIELD VERIFICATION BY: MARQUEZ SURVEYING CO. INC. DATE 6-22-99
DRAWINGS CORRECTED BY: MARQUEZ SURVEYING CO. INC. DATE 8-10-99
MICRO-FILM INFORMATION
RECORDED BY: DATE
NO.

BENCH MARKS
ACS BRASS TABLET CASTINGS: "LIMBAUGH ENGINEERS INC. STAMPED HV-14 RESET 1974 ACS" SET IN TOP OF A CONCRETE POST FLUSH WITH THE GROUND. LOCATED ABOUT 350 FT SOUTH OF VIEWPOINT ROAD, 0.15 MILES WEST OF YALE BLVD.
ELEVATION= 5259.9

SURVEY INFORMATION
FIELD NOTES
NO. | BY | DATE

ENGINEER'S SEAL
DENNIS A. LORENZ NEW MEXICO 9647 REGISTERED PROFESSIONAL ENGINEER

NO.	DATE	REMARKS	BY
		REVISIONS	
		DESIGN	

DESIGNED BY COA DATE 8-97
DRAWN BY COA DATE 8-97
CHECKED BY COA DATE 8-97

CITY OF ALBUQUERQUE
PUBLIC WORKS DEPARTMENT
ENGINEERING DEVELOPMENT GROUP

TITLE: SUNPORT PARK
TRAFFIC SIGNAL FUNCTIONS & DETECTORS
VIDEO DETECTION VERSION

DESIGN REVIEW COMMITTEE: APPROVED JUL 29 1998 DESIGN REVIEW COMMITTEE
CITY ENGINEER APPROVAL
LAST DESIGN UPDATE | MO./DAY/YR. | MO./DAY/YR.

CITY PROJECT NO. 5651.82 | ZONE MAP NO. M-15 | SHEET 17 OF 24

TS-5.DWG 4/15/98 1"=10'

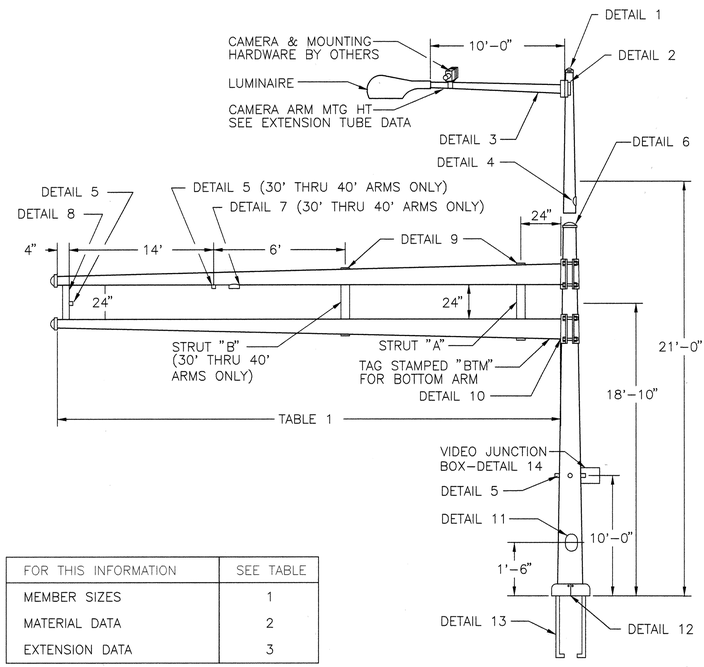

FOR THIS INFORMATION	SEE TABLE
MEMBER SIZES	1
MATERIAL DATA	2
EXTENSION DATA	3

ALBUQUERQUE, NM POLE SERIES

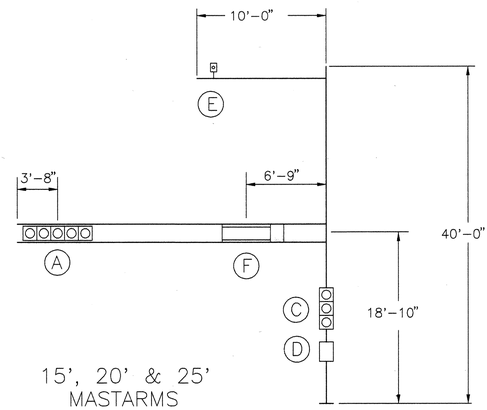

15', 20' & 25' MASTARMS

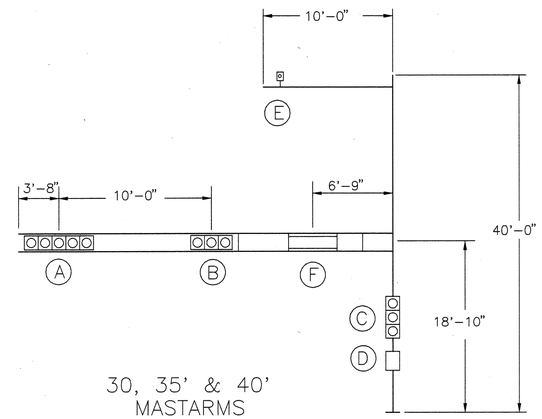

30, 35' & 40' MASTARMS

DEVICE	DESCRIPTION	PROJ AREA (FT 2)	WEIGHT (LBS)
A	12"-5 SEC. SIGNAL WITH BACK PLATE	13.33	75
B	12"-3 SEC. SIGNAL WITH BACK PLATE	8.67	50
C	DUAL 12"-3 SEC. SIGNAL WITHOUT BACK PLATES	8.20	100
D	DUAL PEDESTRIAN SIGNAL & VIDEO JUNCTION BOX	3.00	60
E	VIDEO CAMERA	1.00 EPA	35
F	FREE SWINGING STREET NAME -96" X 16"	3.00 EPA	35

DESIGN CRITERIA:

1985 AASHTO STANDARD SPECIFICATIONS FOR STRUCTURAL SUPPORTS FOR HIGHWAY SIGNS, LUMINAIRES, AND TRAFFIC SIGNALS.

WIND VELOCITY:

80 MPH ISOTACH

LOADING INFORMATION

TABLE 1: POLE AND MASTARM SCHEDULE

DESIGNATION (SEE EXAMPLE ABOVE)				POLE DATA				BASE PLATE DATA				ANCHOR BOLT DATA				MASTARM DATA				ARM ATTACHMENT DATA				
POLE SERIES	POLE TYPE	SIGNAL ARM SPAN (FT)	CAMERA MOUNTING HEIGHT 0=NO CAMERA	BASE DIA	TOP DIA	LENGTH	GA	CIRCLE "C"	THK "G"	BC RANGE BC1	BC RANGE BC2	BOLT CIRCLE	DIAMETER "K"	LENGTH "J"	HOOK "H"	FIXED END DIA	FREE END DIA	GA	LENGTH (FT)	"A"	"B"	"C"	"D"	"E"
ALB	2	15	0, 30, 35, 40	10.00"	7.06"	21'-0"	7	23.00"	1.50"	16.00"	19.00"	16.00"	1.50"	54"	6"	5.80"	3.70"	11	15	7.25"	9.44"	10.81"	10.38"	1.00"-8UNC X 8.00"
ALB	2	20	0, 30, 35, 40	10.00"	7.06"	21'-0"	7	23.00"	1.50"	16.00"	19.00"	16.00"	1.50"	54"	6"	6.50"	3.70"	11	20	7.25"	9.44"	10.81"	10.38"	1.00"-8UNC X 8.00"
ALB	2	25	0, 30, 35, 40	10.00"	7.06"	21'-0"	7	23.00"	1.50"	16.00"	19.00"	16.00"	1.50"	54"	6"	7.00"	3.50"	11	25	7.25"	9.44"	10.81"	10.38"	1.00"-8UNC X 8.00"
ALB	2	30	0, 30, 35, 40	12.00"	9.06"	21'-0"	5	23.00"	1.50"	16.00"	19.00"	16.00"	1.50"	54"	6"	7.72"	3.52"	7	30	9.25"	11.44"	13.81"	12.38"	1.00"-8UNC X 9.00"
ALB	2	35	0, 30, 35, 40	12.00"	9.06"	21'-0"	5	23.00"	1.50"	16.00"	19.00"	16.00"	1.50"	54"	6"	8.30"	3.40"	7	35	9.25"	11.44"	13.81"	12.38"	1.00"-8UNC X 9.00"
ALB	2	40	0, 30, 35, 40	12.00"	9.06"	21'-0"	5	23.00"	1.50"	16.00"	19.00"	16.00"	1.50"	54"	6"	9.00"	3.40"	7	40	9.25"	11.44"	13.81"	12.38"	1.00"-8UNC X 9.00"

TABLE 2: MATERIAL DATA

COMPONENT	ASTM DESIGNATION	MIN. YIELD (KSI)	COMPONENT	ASTM DESIGNATION	MIN YIELD (KSI)
POLE TUBE	A595 GR A	55	SIGNAL ARM CLAMP	A36	36
BASE PLATE	A36	36	SIGNAL ARM CONN BOLTS	A325 *	
MAST ARM TUBE	A595 GR A	55	CAMERA ARM PLATES	A36	36
CAMERA ARM TUBE	A595 GR A	55	GALVANIZING	A123 & A153	
POLE EXTENSION	A595 GR A	55			
ANCHOR BOLTS AASHTO M314 GR. 55					

* LUBRICATE IN FIELD IF NECESSARY IN LIEU OF THE REQUIREMENT IN A325

TABLE 3: EXTENSION TUBE DATA

MASTARM LENGTH (FT)	CAMERA MTG HT (FT)	EXTENSION TUBE BASE DIA	EXTENSION TUBE TOP DIA	EXTENSION TUBE LENGTH (FT)	EXTENSION TUBE GAUGE
15-20	30	7.00	5.74	9.0	11
	35	7.00	5.04	14.0	11
	40	7.00	4.34	19.0	11
30-40	30	9.00	7.74	9.0	11
	35	9.00	7.04	14.0	11
	40	9.00	6.34	19.0	11

FINISH:

☒ GALVANIZED

☐ POWDER COATED

COLOR _____

ALB - 3 - 25 - 40

- CAMERA MOUNTING HEIGHT (0,30',35',OR 40')
- SIGNAL ARM SPAN (15',20',25',30',35',40')
- POLE TYPE
- ALBUQUERQUE POLE SERIES (ALB)

DESIGNATION EXAMPLE **

** POLE SHAFTS SHALL BE MARKED "ALB" "15-25" OR "30-40", AND DATE OF FABRICATION (MONTH/YEAR).

AS-BUILT INFORMATION

CONTRACTOR MARQUEZ SURVEYING CO. INC. DATE
VERIFIED STAKED BY MARQUEZ SURVEYING CO. INC. DATE 1-1999
INSPECTOR'S AUTOPRINT BY DATE
FIELD VERIFICATION BY MARQUEZ SURVEYING CO. INC. DATE 6-22-99
DRAWING CORRECTED BY MARQUEZ SURVEYING CO. INC. DATE 8-11-99

MICRO-FILM INFORMATION

RECORDED BY DATE
NO.

BENCH MARKS

ASC BRASS TABLET CASTINGS: "LIMBAUGH ENGINEERS INC. STAMPED HV-14 RESET 1974 ACS" SET IN TOP OF A CONCRETE POST FLUSH WITH THE GROUND. LOCATED ABOUT 350 FT SOUTH OF VIEWPOINT ROAD, 0.15 MILES WEST OF YALE BLVD.
ELEVATION= 5259.9

SURVEY INFORMATION

FIELD NOTES

NO.	BY	DATE

ENGINEER'S SEAL

DENNIS A. LOPEZ NEW MEXICO 10201 REGISTERED PROFESSIONAL ENGINEER
5-15-98

NO.	DATE	REMARKS	BY
		REVISIONS	
		DESIGN	

DESIGNED BY COA DATE 8-97
DRAWN BY COA DATE 8-97
CHECKED BY COA DATE 8-97

CITY OF ALBUQUERQUE
PUBLIC WORKS DEPARTMENT
ENGINEERING DEVELOPMENT GROUP

TITLE: SUNPORT PARK TRAFFIC SIGNAL MASTARM DETAILS TYPE III STANDARD

DESIGN REVIEW COMMITTEE: APPROVED JUL 29 1998
CITY ENGINEER APPROVAL
LAST DESIGN UPDATE MO./DAY/YR. MO./DAY/YR.

CITY PROJECT NO.	ZONE MAP NO.	SHEET	OF
5651.82	M-15	18	26 ~~24~~

TS-12.DWG 4/15/98 1"=10'

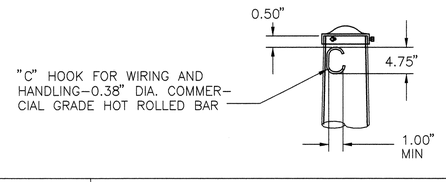

DETAIL 1 — POLE TOP

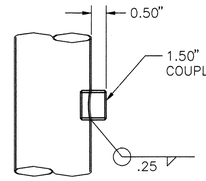

DETAIL 5 — POLE COUPLING

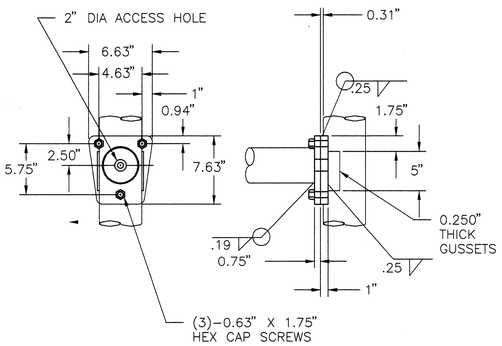

DETAIL 2 — CAMERA ARM ATTACHMENT

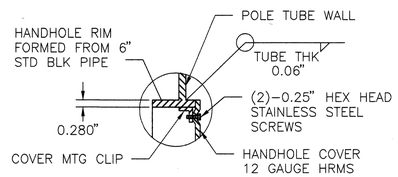

SECTION A–A

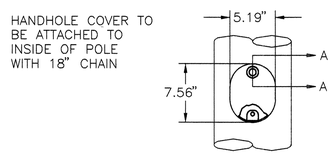

DETAIL 6 — EXTENSION HANDHOLE

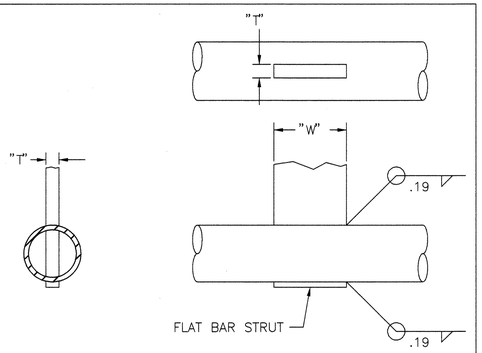

STRUT	ARM SPAN	
	15' THRU 25'	30' THRU 40'
	"W" X "T"	"W" X "T"
A	5" X 0.50"	7" X 0.50"
B	——	5" X 0.50"

DETAIL 9 — MID BAR STRUT

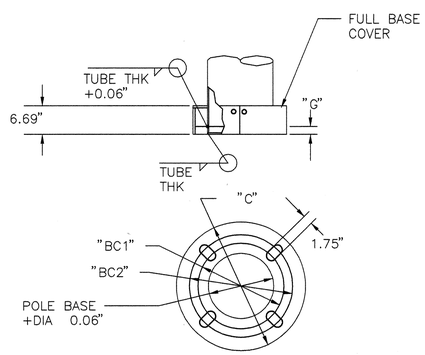

DETAIL 12 — POLE BASE

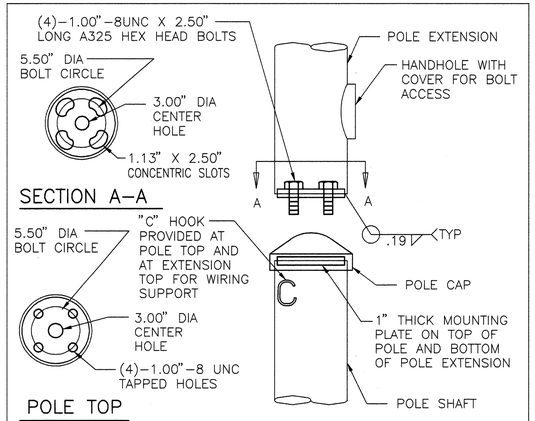

DETAIL 4 — POLE EXTENSION CONNECTION

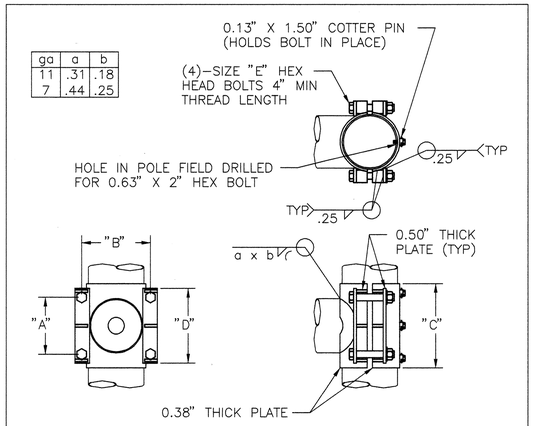

ga	a	b
11	.31	.18
7	.44	.25

DETAIL 10 — SIGNAL ARM ATTACHMENT

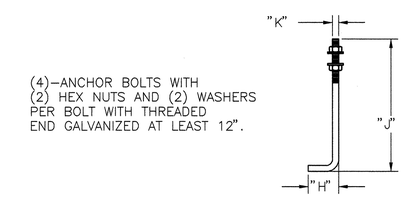

DETAIL 13 — ANCHOR BOLT

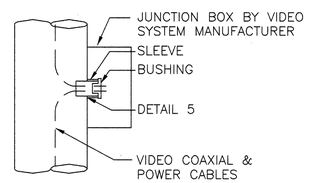

DETAIL 14 — VIDEO JUNCTION BOX

SEE DETAIL 6

DETAIL 7 — HANDHOLE

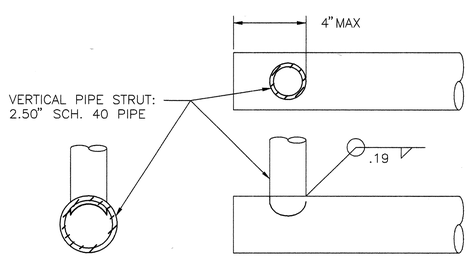

DETAIL 8 — END PIPE STRUT

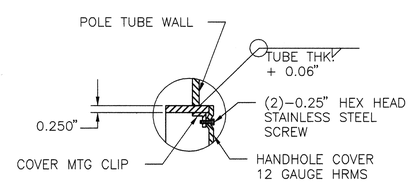

SECTION A–A

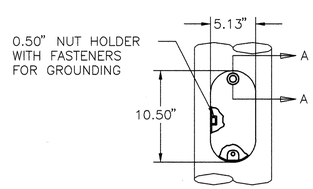

DETAIL 11 — HANDHOLE

AS–BUILT INFORMATION

CONTRACTOR: Marquez Surveying Co., Inc. DATE 4-1999
WORK STAKED BY: Marquez Surveying Co., Inc. DATE 4-1999
INSPECTOR'S ACCEPTANCE BY: DATE
FIELD VERIFICATION BY: Marquez Surveying Co., Inc. DATE 8-10-99
CORRECTIONS BY: Marquez Surveying Co., Inc. DATE 8-10-99

BENCH MARKS

ACS BRASS TABLET CASTINGS: "LIMBAUGH ENGINEERS INC. STAMPED HV–14 RESET 1974 ACS" SET IN TOP OF A CONCRETE POST FLUSH WITH THE GROUND. LOCATED ABOUT 350 FT SOUTH OF VIEWPOINT ROAD, 0.15 MILES WEST OF YALE BLVD.
ELEVATION= 5259.9

SURVEY INFORMATION

FIELD NOTES

NO.	BY	DATE

MICRO–FILM INFORMATION

RECORDED BY: DATE
NO.

ENGINEER'S SEAL

DEBRA A. MARQUEZ NEW MEXICO 9640 REGISTERED PROFESSIONAL ENGINEER
5-15-98

NO.	DATE	REMARKS	BY
		REVISIONS	
		DESIGN	

DESIGNED BY COA DATE 8–97
DRAWN BY COA DATE 8–97
CHECKED BY COA DATE 8–97

CITY OF ALBUQUERQUE
PUBLIC WORKS DEPARTMENT
ENGINEERING DEVELOPMENT GROUP

TITLE: SUNPORT PARK
TRAFFIC SIGNAL
TYPE III STANDARD–MISCELLANEOUS DETAILS

DESIGN REVIEW COMMITTEE: APPROVED JUL 29 1998 DESIGN REVIEW COMMITTEE
CITY ENGINEER APPROVAL
LAST DESIGN UPDATE — MO./DAY/YR. — MO./DAY/YR.

CITY PROJECT NO.	ZONE MAP NO.	SHEET	OF
5651.82	M–15	19	26 ~~24~~

TS–13.DWG 4/15/98 1"=10'

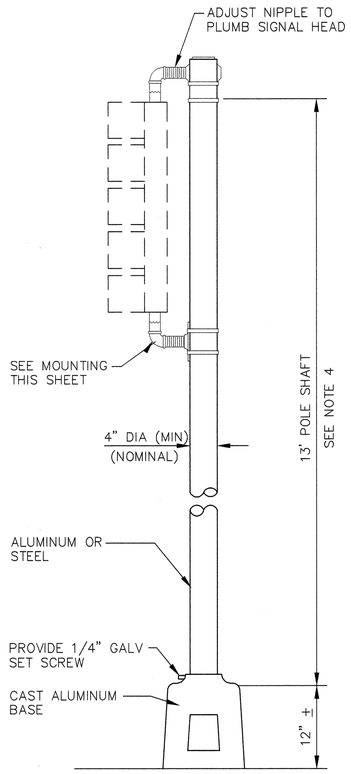

PEDESTAL POLE DETAILS

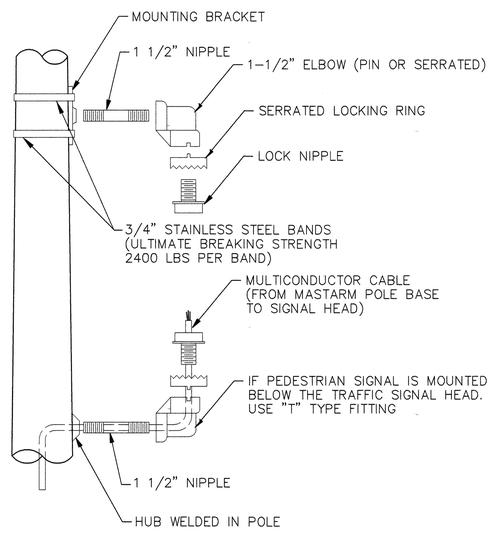

SIDE VIEW

MOUNTING DETAIL

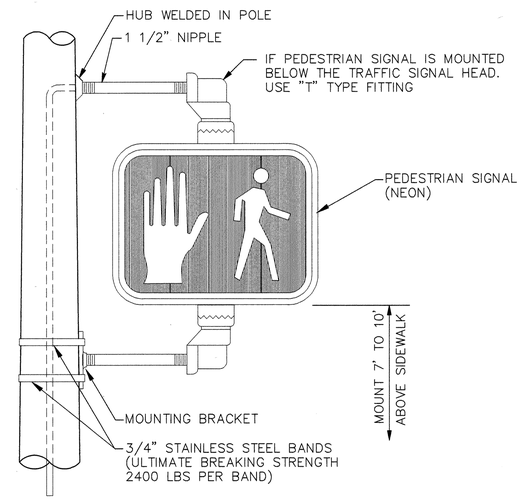

PEDESTRIAN SIGNAL DETAILS

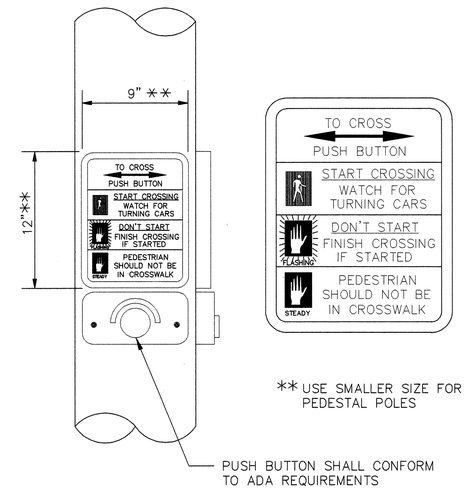

PUSH BUTTON DETAIL

NOTES:

1. STREET NAME SIGNS REQUIRED AS SHOWN ON PLANS.
2. STREET NAME SIGN SHALL BE 16" WIDE WITH 8" SERIES "C" LETTERS. SIGN SHALL BE NO MORE THAN TO 12 SQUARE FEET TOTAL AREA AND SHALL HAVE HIGH INTENSITY REFLECTIVE LEGEND, 1" BORDER AND BACKGROUND COLORS: WHITE ON GREEN, SIGN PANELS SHALL BE SINGLE SHEET 6061-T6 ALUMINUM .120 MINIMUM THICKNESS.
3. PEDESTRIAN ACTUATED CROSSING SHALL BE A MAXIMUM OF 42" (1065 mm) ABOVE THE FINISHED PUBLIC SIDEWALK. A STABLE, FIRM, AND SLIP-RESISTANT AREA - 30"x48" (915 mm x 1220 mm) - SHALL BE PROVIDED TO ALLOW FOR A FORWARD OR A PARALLEL APPROACH TO THE CONTROLS. WHERE A PARALLEL IS PROVIDED, CONTROLS SHALL BE WITHIN 10" (255 mm) HORIZONTALLY OF AND CENTERED ON THE CLEAR GROUND SPACE.
4. FOR INSTALLATIONS WITH ONLY PEDESTRIAN SIGNALS, CUT SHAFT TO 9'. USE 15' SHAFT FOR PEDESTAL POLES REQUIRING BOTH 5-SECTION SIGNAL ASSEMBLIES AND PEDESTRIAN SIGNALS.

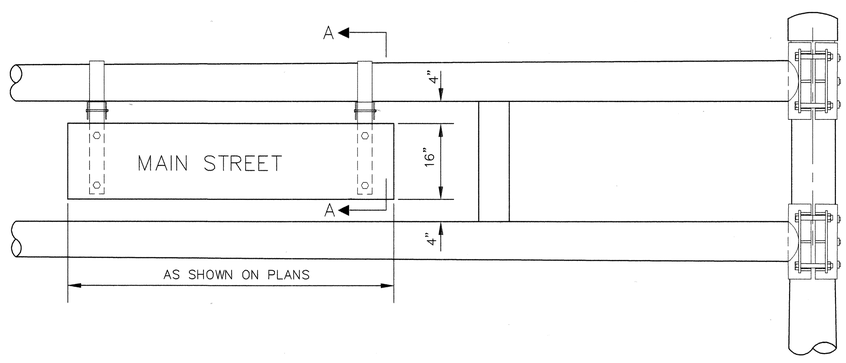

STREET NAME SIGN DETAILS

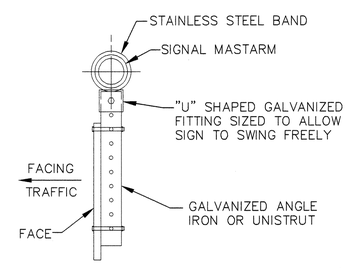

SECTION "A-A"

FINISH:

☐ GALVANIZED

☐ POWDER COATED

COLOR _____

AS-BUILT INFORMATION

CONTRACTOR STAKED BY: Marquez Surveying Co. Inc. DATE 4-1-99
INSPECTOR'S ACCEPTANCE BY FIELD VERIFICATION BY: Marquez Surveying Co. Inc. DATE 4-22-99
REVISIONS CORRECTED BY: Marquez Surveying Co. Inc. DATE 5-10-99
MICRO-FILM INFORMATION
RECORDED BY DATE
NO.

BENCH MARKS

ACS BRASS TABLET CASTINGS: "LIMBAUGH ENGINEERS INC. STAMPED HV-14 RESET 1974 ACS" SET IN TOP OF A CONCRETE POST FLUSH WITH THE GROUND. LOCATED ABOUT 350 FT SOUTH OF VIEWPOINT ROAD, 0.15 MILES WEST OF YALE BLVD.
ELEVATION= 5259.9

SURVEY INFORMATION

FIELD NOTES

NO.	BY	DATE

ENGINEER'S SEAL

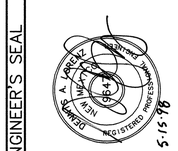

NO.	DATE	REMARKS	BY
		REVISIONS	
		DESIGN	

DESIGNED BY COA DATE 8-97
DRAWN BY COA DATE 8-97
CHECKED BY COA DATE 8-97

CITY OF ALBUQUERQUE
PUBLIC WORKS DEPARTMENT
ENGINEERING DEVELOPMENT GROUP

TITLE: SUNPORT PARK
TRAFFIC SIGNAL
MISCELLANEOUS DETAILS

DESIGN REVIEW COMMITTEE: APPROVED JUL 29 1998 DESIGN REVIEW COMMITTEE

CITY ENGINEER APPROVAL

LAST DESIGN UPDATE MO./DAY/YR. MO./DAY/YR.

CITY PROJECT NO.	ZONE MAP NO.	SHEET	OF
5651.82	M-15	20	26 ~~24~~

TS-15.DWG 4/15/98 1"=10'

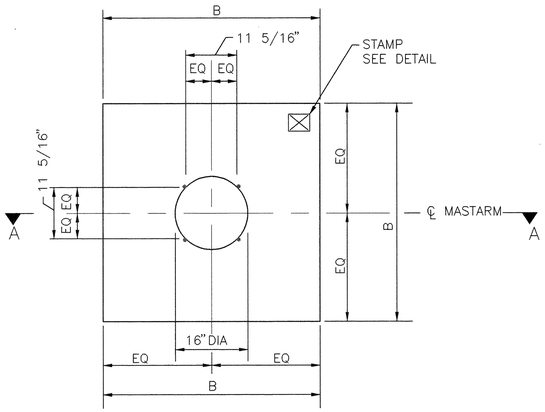

PLAN VIEW (SQUARE)

NOT TO SCALE

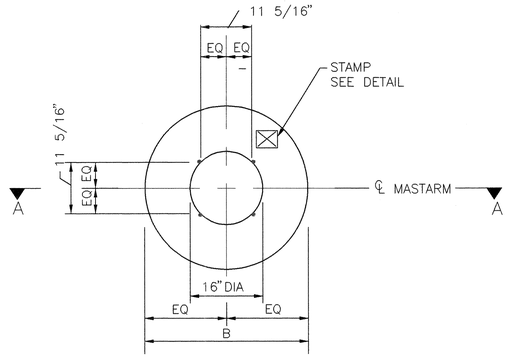

PLAN VIEW (ROUND)

NOT TO SCALE

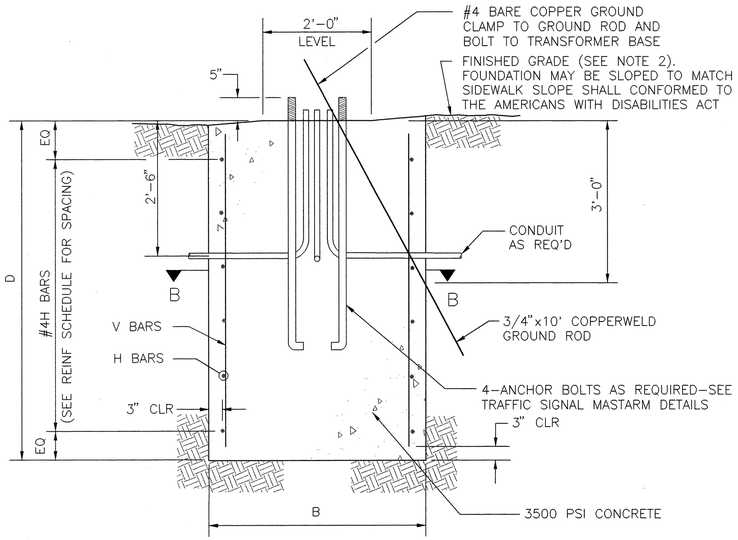

SECTION A-A (ROUND OR SQUARE)

NOT TO SCALE

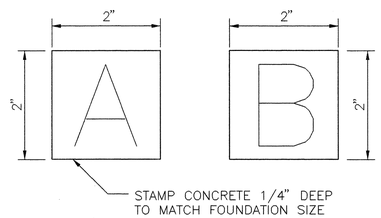

STAMP DETAIL

NO SCALE

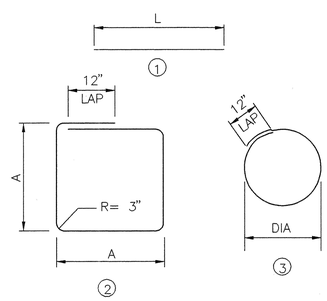

BAR BENDING DIAGRAM

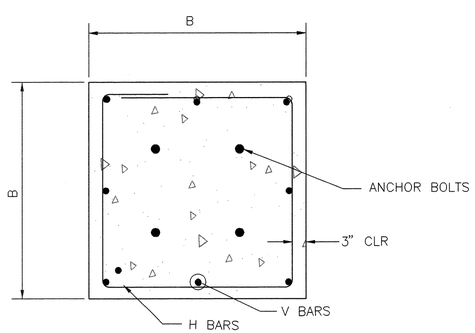

SECTION B-B (SQUARE)

NOT TO SCALE

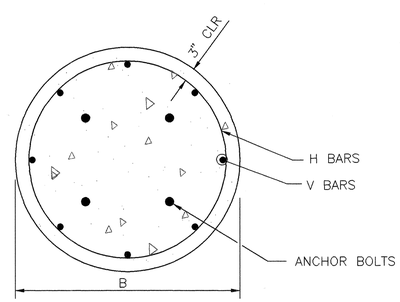

SECTION B-B (ROUND)

NOT TO SCALE

FOUNDATION DIMENSIONS AND QUANTITIES

FOUNDATION TYPE	SIGNAL ARM SPAN(FT)	DIMENSION B (WIDTH)	DIMENSION D (DEPTH)	REINFORCING V BARS MARK	REINFORCING H BARS MARK	REBAR POUNDS	3500 PSI CONCRETE CUBIC YARDS	NOTES
TYPE A (SQUARE)	15 20 25	3'-6" " "	5'-0" " "	#4V2 " "	#3H2 " "	49.1 •	2.27 " "	
TYPE B (SQUARE)	30 35 40	4'-0" " "	6'-3" " "	#5V1 " "	#3H1 " "	82.6	3.70 " "	
TYPE A (ROUND)	15 20 25	2'-6" " "	8'-6" " "	#6V4 " "	#3H4 " "	98.1	1.55 " "	ROUND SHAPE TO BE USED ONLY WHERE SPECIFICALLY NOTED ON PLANS OR WHEN APPROVED BY THE PROJECT MANAGER.
TYPE B (ROUND)	30 35 40	3'-0" " "	11'-9" " "	#7V3 " "	#3H3 " "	179.7	3.08 " "	

REINFORCING SCHEDULE (GRADE 60 BARS)

MARK	QUANT	TYPE	SIZE	LENGTH	COMMENTS
#5V1	8	1	5	5'-9"	
#4V2	8	1	4	4'-6"	
#7V3	6	1	7	11'-3"	
#6V4	6	1	6	8'-0"	
#3H1	6	2	3	15'-4"	A = 42",TIES AT 14" OC
#3H2	5	2	3	13'-4"	A = 36",TIES AT 12" OC
#3H3	12	3	3	9'-3"	DIA = 30",TIES AT 12" OC
#3H4	9	3	3	7'-8"	DIA = 24",TIES AT 12" OC

TRAFFIC SIGNAL MASTARM FOUNDATION NOTES

1. REFER TO THE PLANS FOR LOCATIONS OF TRAFIC SIGNAL MASTARM FOUNDATIONS.
2. FINISHED GRADE FOR THE FOUNDATIONS SHALL BE ESTABLISHED IN THE FIELD BY THE PROJECT MANAGER.
3. THE FOUNDATIONS SHOWN HERE SHALL BE CONSTRUCTED IN ACCORDANCE WITH THE CITY OF ALBUQUERQUE STANDARD SPECIFICATIONS FOR PUBLIC WORKS CONSTRUCTION, CURRENT REVISION.
4. CONCRETE SHALL BE 3500 PSI FOR EXTERIOR STRUCTURES. REFER TO TABLE 101.C OF THE SPECIFICATIONS.
5. REINFORCING STEEL SHALL CONFORM TO ASTM A-615 GRADE 60.
6. THE TOP 6 INCHES OF THE FOUNDATION PEDESTAL SHALL BE FORMED TO THE DIMENSIONS SHOWN ON THIS SHEET TO FORM NEAT LINES. CONCRETE BELOW 6 LINES MAY BE CAST AGAINST THE EARTH.
7. THE CONCRETE SHALL GAIN 80% OF THE DESIGN STRENGTH PRIOR TO INSTALLING THE TRAFFIC SIGNAL MASTARM.
8. ALL FOUNDATIONS SHALL INCLUDE COPPERWELD GROUND RODS. ALL GROUND RODS SHALL BE 3/4" DIA X 10'-0" AND WILL BE CONSIDERED INCIDENTAL TO THE FOUNDATIONS BID ITEMS.
9. ALL FOUNDATIONS SHALL BE STAMPED EITHER "A" OR "B" TO SHOW TYPE CONSTRUCTED (SEE STAMP DETAIL).

AS-BUILT INFORMATION
CONTRACTOR STAKED BY Marquez Surveying Co, Inc DATE 4-1999
INSPECTOR'S SUBSTANTIAL BY DATE
FIELD VERIFICATION BY Marquez Surveying Co, Inc DATE 6-22-99
DRAWINGS CORRECTED BY Marquez Surveying Co, Inc DATE 8-10-99
MICRO-FILM INFORMATION
RECORDED BY DATE
NO.

BENCH MARKS
ACS BRASS TABLET CASTINGS; "LIMBAUGH ENGINEERS INC. STAMPED HV-14 RESET 1974 ACS" SET IN TOP OF A CONCRETE POST FLUSH WITH THE GROUND. LOCATED ABOUT 350 FT SOUTH OF VIEWPOINT ROAD, 0.15 MILES WEST OF YALE BLVD.
ELEVATION= 5259.9

SURVEY INFORMATION
FIELD NOTES

NO.	BY	DATE

ENGINEER'S SEAL
DENNIS A. LORENZ NEW MEXICO 6869 REGISTERED PROFESSIONAL ENGINEER
5-15-98

NO.	DATE	REMARKS	BY
		REVISIONS	
		DESIGN	

DESIGNED BY COA DATE 8-97
DRAWN BY COA DATE 8-97
CHECKED BY COA DATE 8-97

CITY OF ALBUQUERQUE
PUBLIC WORKS DEPARTMENT
ENGINEERING DEVELOPMENT GROUP

TITLE: SUNPORT PARK
TRAFFIC SIGNAL
FOUNDATION DETAILS TYPE II AND TYPE III STANDARDS

DESIGN REVIEW COMMITTEE: APPROVED JUL 29 1998 DESIGN REVIEW COMMITTEE
CITY ENGINEER APPROVAL
LAST DESIGN UPDATE
MO./DAY/YR. MO./DAY/YR.

CITY PROJECT NO.	ZONE MAP NO.	SHEET	OF
5651.82	M-15	21	24

TS-16.DWG 4/15/98 1"=10'

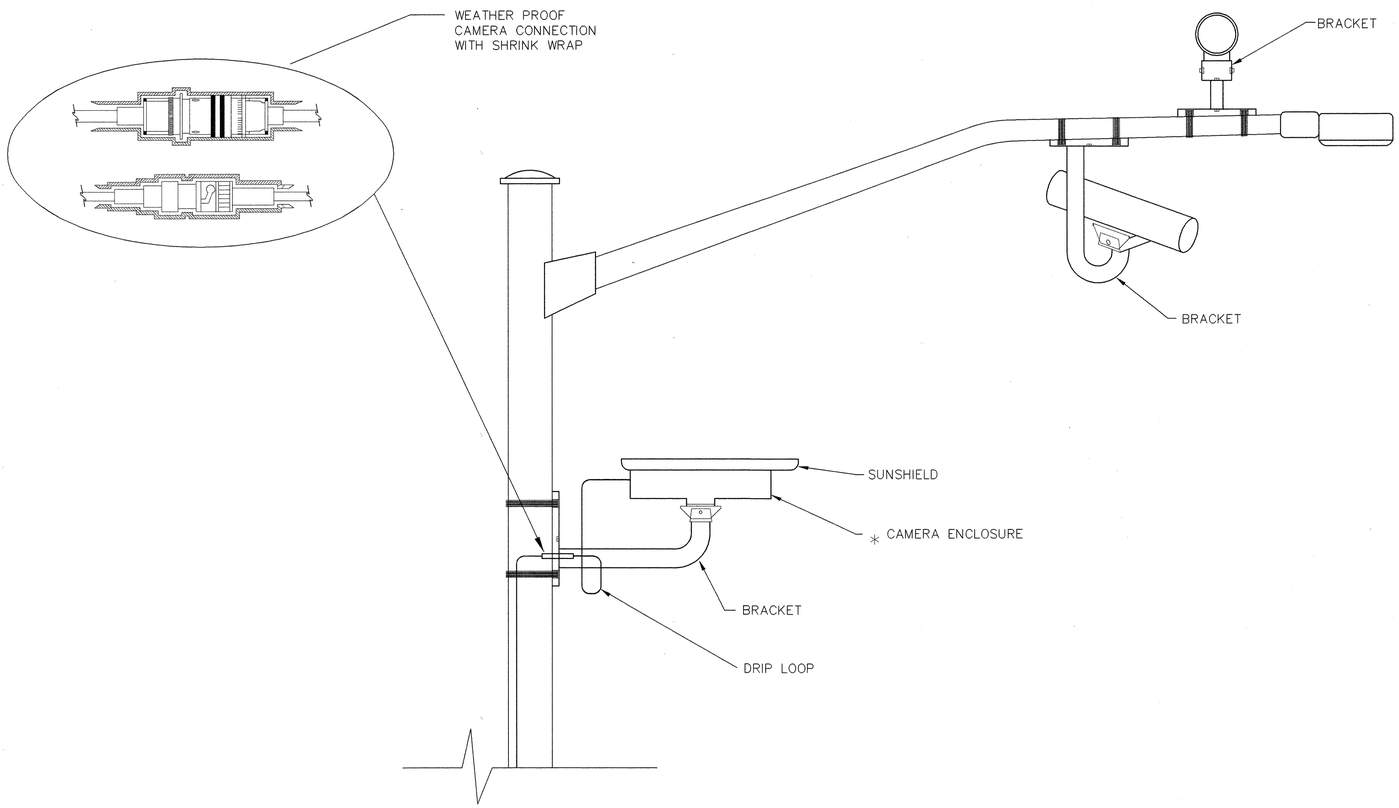

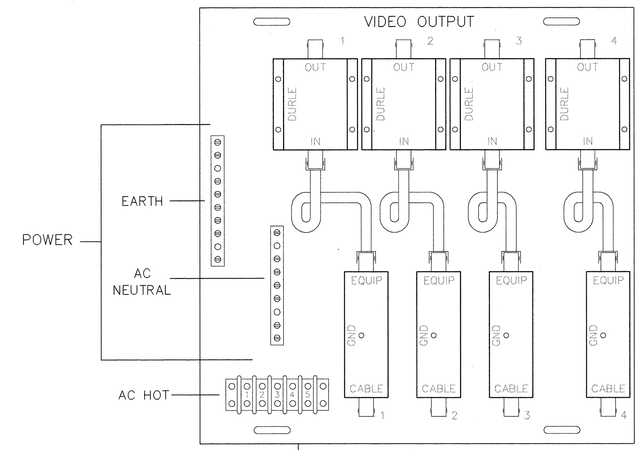

CAMERA INTERFACE PANEL

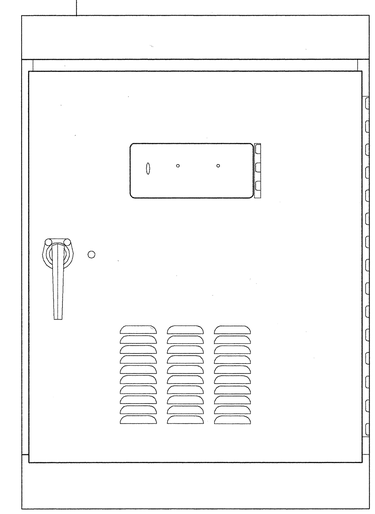

* CAMERA SHALL BE ROTATED INSIDE THE ENCLOSURE AFTER INSTALLATION, TO ALIGN HORIZON AT HORIZONTAL PLANE.

TS-33.DWG 4/15/98 1"=10'

AS-BUILT INFORMATION

CONTRACTOR	MARQUEZ SURVEYING CO. INC.	DATE 4-1994
WORK STAKED BY	MARQUEZ SURVEYING CO. INC.	DATE
INSPECTOR'S INSPECTION BY		DATE
FIELD VERIFICATION BY	MARQUEZ SURVEYING CO. INC.	DATE 6-22-98
DRAWINGS CORRECTED BY	MARQUEZ SURVEYING CO. INC.	DATE 8-10-98

MICRO-FILM INFORMATION

RECORDED BY: DATE

NO.

BENCH MARKS

ACS BRASS TABLET CASTINGS: "LIMBAUGH ENGINEERS INC. STAMPED HV-14 RESET 1974 ACS" SET IN TOP OF A CONCRETE POST FLUSH WITH THE GROUND, LOCATED ABOUT 350 FT SOUTH OF VIEWPOINT ROAD, 0.15 MILES WEST OF YALE BLVD.

ELEVATION= 5259.9

SURVEY INFORMATION

FIELD NOTES

NO.	BY	DATE

ENGINEER'S SEAL

DENNIS A. LORENZ NEW MEXICO 9630 REGISTERED PROFESSIONAL ENGINEER

5-15-98

NO.	DATE	REMARKS	BY
		REVISIONS	
		DESIGN	

DESIGNED BY COA DATE 8-97

DRAWN BY COA DATE 8-97

CHECKED BY COA DATE 8-97

CITY OF ALBUQUERQUE
PUBLIC WORKS DEPARTMENT
ENGINEERING DEVELOPMENT GROUP

TITLE: SUNPORT PARK
TRAFFIC SIGNAL
MACHINE VISION VEHICLE DETECTOR SYSTEMS

DESIGN REVIEW COMMITTEE: APPROVED JUL 29 1998 DESIGN REVIEW COMMITTEE

CITY ENGINEER APPROVAL

LAST DESIGN UPDATE MO./DAY/YR. MO./DAY/YR.

CITY PROJECT NO.	ZONE MAP NO.	SHEET	OF
5651.82	M-15	22	26 ~~24~~

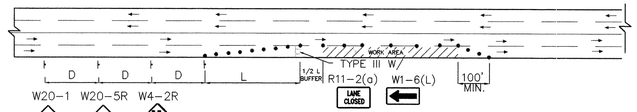

TYPICAL RIGHT LANE CLOSURE

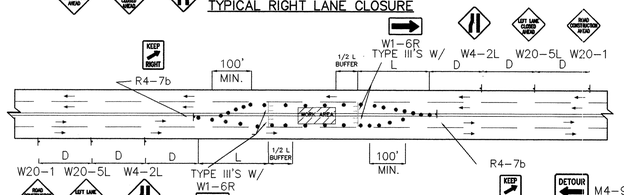

TYPICAL LEFT LANE CLOSURE

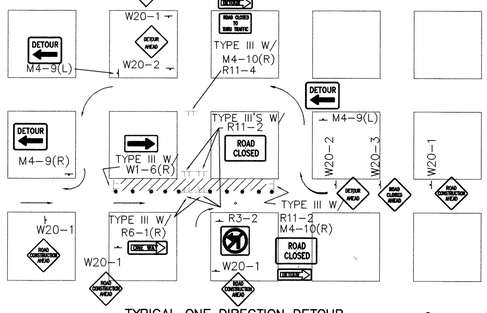

TYPICAL ONE DIRECTION DETOUR

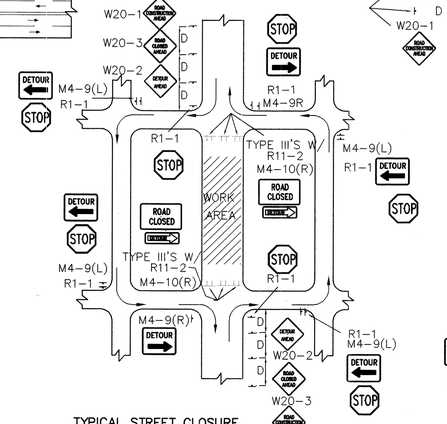

TYPICAL STREET CLOSURE

NOTE: (R1-1) BASED ON FIELD CONDITIONS.

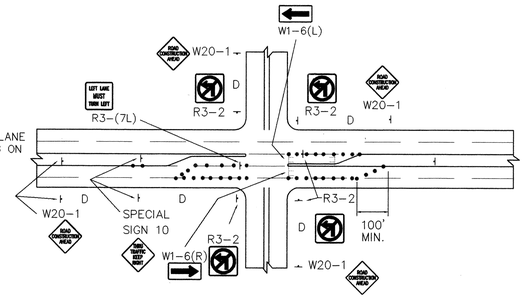

NOTE:
MAY REQUIRE LEFT LANE CLOSURE DEPENDING ON FIELD CONDITIONS.

TYPICAL LANE CLOSURE AT INTERSECTION

NOTE: DEPENDING ON WORK ZONE LOCATION

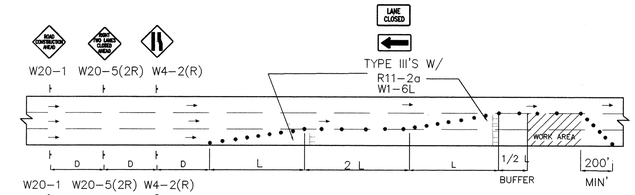

TYPICAL DOUBLE RIGHT LANE CLOSURE

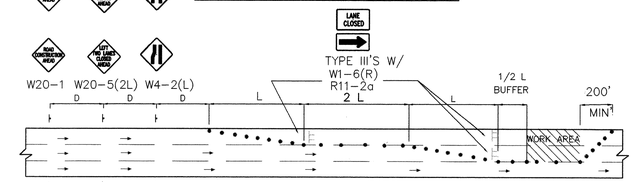

TYPICAL DOUBLE LEFT LANE CLOSURE

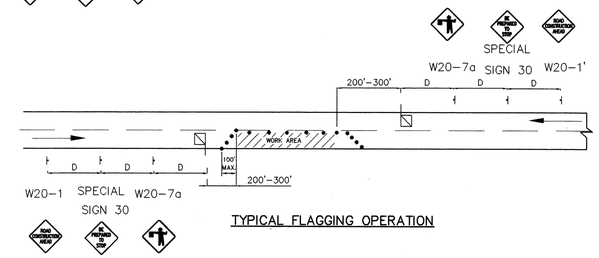

TYPICAL FLAGGING OPERATION

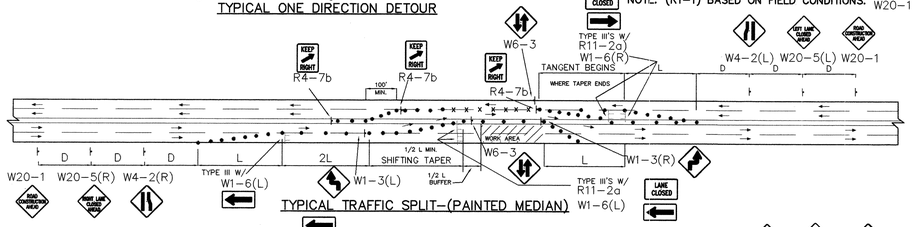

TYPICAL TRAFFIC SPLIT-(PAINTED MEDIAN)

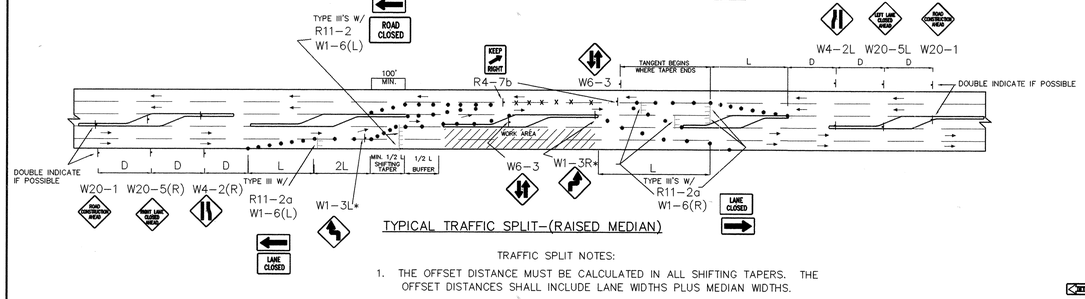

TYPICAL TRAFFIC SPLIT-(RAISED MEDIAN)

TRAFFIC SPLIT NOTES:

1. THE OFFSET DISTANCE MUST BE CALCULATED IN ALL SHIFTING TAPERS. THE OFFSET DISTANCES SHALL INCLUDE LANE WIDTHS PLUS MEDIAN WIDTHS.
2. 1/2 L IS MINIMUM DISTANCE FOR SHIFTING TAPERS.
3. REVERSE CURVES MAY BE IMPLEMENTED. ALL CURVE DATA SHALL BE CALCULATED.
4. MEDIAN REMOVAL SHALL BE REQUIRED IF 1/2 L OR REVERSE CURVE IS NOT SUFFICIENT. MEDIAN REMOVAL SHALL TAKE PLACE BEFORE SPLITS.
5. REDUCED SPEED MAY BE CONSIDERED.
6. * USE W1-3 FOR 30 MPH OR LESS, W1-4 FOR SPEED 35 MPH OR GREATER.

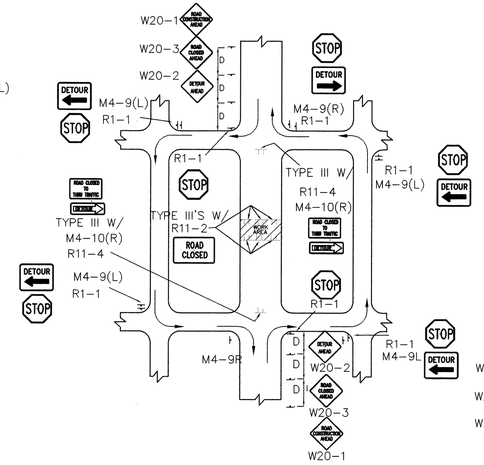

TYPICAL MID-BLOCK CLOSURE

NOTE: (R1-1) BASED ON FIELD CONDITIONS.

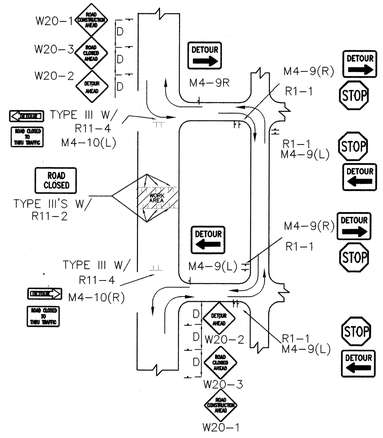

TYPICAL STREET CLOSURE

NOTE: (R1-1) BASED ON FIELD CONDITIONS.

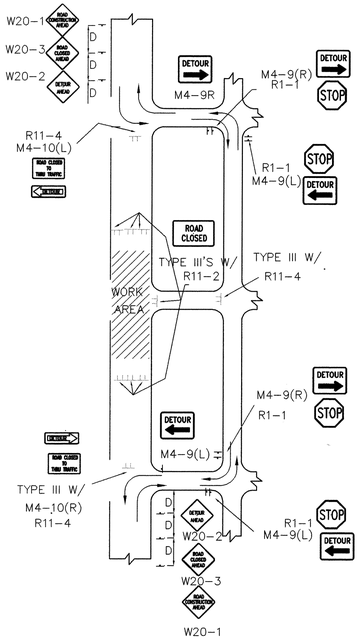

TYPICAL STREET CLOSURE

NOTE: (R1-1) BASED ON FIELD CONDITIONS.

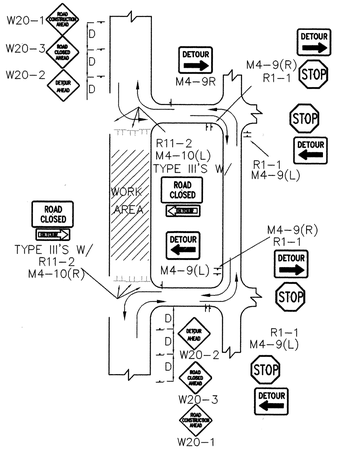

TYPICAL STREET CLOSURE

NOTE: (R1-1) BASED ON FIELD CONDITIONS.

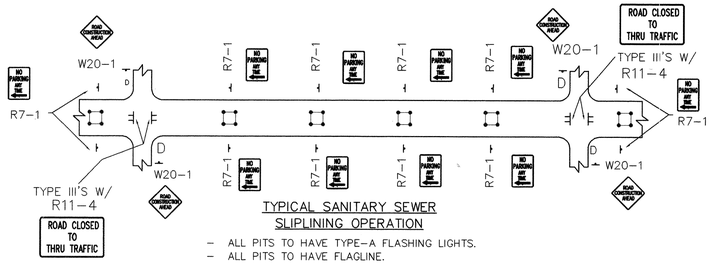

TYPICAL SANITARY SEWER SLIPLINING OPERATION

- ALL PITS TO HAVE TYPE-A FLASHING LIGHTS.
- ALL PITS TO HAVE FLAGLINE.

GENERAL NOTE:

ALL CONSTRUCTION WARNING SIGNS SHALL HAVE A BLACK LEGEND ON A ORANGE BACKGROUND.

ALL ADVANCE WARNING SIGNS SHALL BE A MINIMUM OF FORTY EIGHT (48) INCHES BY FORTY EIGHT (48) INCHES IN SIZE AND SHALL HAVE ONE WARNING LIGHT.

6039-TCP.DWG 4/15/98 1"=1'

AS BUILT INFORMATION
CONTRACTOR: MARQUEZ SURVEYING CO. INC. 4-1999 DATE
WORK STAKED BY: MARQUEZ SURVEYING CO. INC. DATE
WORK STAKED NO. DATE
ACCEPTANCE BY
FIELD VERIFICATION BY: MARQUEZ SURVEYING CO. INC. DATE: 4-22-99
DRAWINGS CORRECTED BY: MARQUEZ SURVEYING CO. INC. DATE: 8-10-99
MICRO-FILM INFORMATION
RECORDED BY DATE
NO.

BENCH MARKS
ACS BRASS TABLET (CASTINGS): "LIMBAUGH ENGINEERS INC. STAMPED HV-14 RESET 1974 ACS" SET IN TOP OF A CONCRETE POST FLUSH WITH THE GROUND. LOCATED ABOUT 350 FT SOUTH OF VIEWPOINT ROAD, 0.15 MILES WEST OF YALE BLVD.
ELEVATION= 5259.9

SURVEY INFORMATION
FIELD NOTES

NO.	DATE	BY

ENGINEER'S SEAL
DENNIS A. LORENZ NEW MEXICO REGISTERED PROFESSIONAL ENGINEER 9640
5-15-98

NO.	DATE	REMARKS	BY
		REVISIONS	
		DESIGN	

DESIGNED BY D.A.L. DATE 2/97
DRAWN BY A.S.C. DATE 2/97
CHECKED BY D.A.L. DATE 2/97

BRASHER & LORENZ, INC.
Consulting Engineers
2201 San Pedro NE Building 1 Suite 210
Albuquerque, New Mexico 87110
Ph: 505-888-6088 Fax: 505-888-6188

CITY OF ALBUQUERQUE
PUBLIC WORKS DEPARTMENT
ENGINEERING DEVELOPMENT GROUP

TITLE: SUNPORT PARK
TRAFFIC CONTROL PLAN

Design Review Committee: APPROVED JUL 29 1998 DESIGN REVIEW COMMITTEE
City Engineer Approval
Last Design Update | Mo./Day/Yr. | Mo./Day/Yr.

City Project No. 5651.82
Zone Map No. M-15
Sheet 23 Of 26 24

CONSTRUCTION TRAFFIC CONTROL GENERAL NOTES

1. CONTRACTOR MUST OBTAIN FROM CONSTRUCTION COORDINATION AN EXCAVATION/BARRICADING PERMIT BEFORE ENGAGING IN ANY CONSTRUCTION, MAINTENANCE OR REPAIR WORK IN ANY OF THE CITY OF ALBUQUERQUE'S RIGHTS-OF-WAY. EMERGENCY WORK THAT WOULD PRESERVE LIFE OR PROPERTY IS EXCLUDED WITH THE UNDERSTANDING, THAT A PERMIT SHALL BE OBTAINED WITHIN 24 TO 48 HOURS.

2. CONTRACTOR SHALL AT THE TIME OF PERMIT REQUEST, SUBMIT FOR APPROVAL BY CONSTRUCTION COORDINATION, A TRAFFIC CONTROL PLAN DETAILING ALL EXISTING TOPOGRAPHY SUCH AS LANE WIDTHS, DRIVEWAYS, AND BUSINESS/RESIDENTIAL ACCESSES. THE TRAFFIC CONTROL PLAN SHALL INCLUDE ALL PHASES OF WORK AND SCHEDULES INVOLVED IN THE CONSTRUCTION PROJECT. ANY SEPARATE PHASES OF A CONSTRUCTION PROJECT SHALL BE GIVEN AN INDIVIDUAL PERMIT EACH. BLANKET PERMITS WILL NOT BE ISSUED.

3. THESE TYPICAL TRAFFIC CONTROL PLANS DO NOT REFLECT THE EXISTING TOPOGRAPHY SUCH AS DRIVEWAYS, LANE WIDTHS, AND BUSINESS/RESIDENTIAL ACCESSES. EVERY LOCATION THAT REQUIRES CONSTRUCTION TRAFFIC CONTROL SHALL HAVE A DETAILED TRAFFIC CONTROL PLAN SHOWING ALL EXISTING TOPOGRAPHY.

4. CONSTRUCTION SHALL NOT BEGIN UNLESS A TRAFFIC CONTROL PLAN HAS BEEN APPROVED AND VERIFIED BY CONSTRUCTION COORDINATION.

5. CONSTRUCTION COORDINATION SHALL BE NOTIFIED 48 HOURS PRIOR TO ANY TRAFFIC CONTROL CHANGES NEEDED BY CONTRACTOR, THAT WERE NOT PREVIOUSLY APPROVED. THESE TRAFFIC CONTROL CHANGES SHALL BE REQUESTED IN WRITING ACCOMPANIED WITH A TRAFFIC CONTROL PLAN REFLECTING SUCH CHANGES.

6. ALL CONSTRUCTION TRAFFIC CONTROL DEVICES SHALL COMPLY TO THE MANUAL ON UNIFORM TRAFFIC CONTROL DEVICES (MUTCD), LATEST EDITION. IT IS THE RESPONSIBILITY OF THE CONTRACTOR TO INSTALL, SERVICE AND MAINTAIN ALL TRAFFIC CONTROL DEVICES. TRAFFIC CONTROL DEVICES SHALL NOT BE REMOVED OR ALTERED IN ANY WAY WITHOUT THE APPROVAL OF CONSTRUCTION COORDINATION, PER SECTION 6A-4 OF THE MUTCD, LATEST EDITION.

7. THE CONSTRUCTION TRAFFIC CONTROL INITIAL SET-UP SHALL BE BY AN AMERICAN TRAFFIC SAFETY SERVICES ASSOCIATION (ATSSA) CERTIFIED WORKSITE TRAFFIC SUPERVISOR. THE MAINTENANCE AND SERVICING SHALL ALSO BE DONE BY AN ATSSA CERTIFIED WORKSITE TRAFFIC SUPERVISOR OR EQUIVALENT.

8. CONTRACTOR IS RESPONSIBLE TO MAINTAIN AND SERVICE ALL TRAFFIC CONTROL DEVICES 24 HOURS A DAY, 7 DAYS A WEEK THROUGHOUT LENGTH OF PROJECT. CONTRACTOR IS RESPONSIBLE THAT ALL TRAFFIC CONTROL DEVICES COMPLY WITH THE MUTCD, LATEST EDITION.

9. ALL ADVANCE WARNING SIGNS SHALL BE DOUBLE INDICATED WHENEVER THERE ARE MULTI-LANE TRAFFIC IN ANY ONE GIVEN DIRECTION AND THERE IS SUFFICIENT MEDIAN SPACE.

10. ALL BARRICADES IN ALL TAPERS AND TANGENTS SHALL BE PLACED APART, A DISTANCE MEASURED IN FEET, EQUAL TO THAT OF THE POSTED SPEED LIMIT. NO EXCEPTIONS UNLESS APPROVED BY CONSTRUCTION COORDINATION PER MUTCD SECTION 6A-4.

11. CONTRACTOR SHALL NOT BEGIN WORK BEFORE 7:00 A.M. OR END WORK AFTER 7:00 P.M. WITHOUT THE APPROVAL OF CONSTRUCTION COORDINATION.

12. CONTRACTOR IS RESPONSIBLE TO PROVIDE CONSTRUCTION COORDINATION, A WEEKLY LOG OF DAILY INSPECTIONS OF BARRICADE AND MAINTENANCE SCHEDULES ON PROJECTS THAT ARE OVER ONE WEEK DURATION.

13. EQUIPMENT OR MATERIALS SHALL NOT BE STORED WITHIN 15 FEET OF A TRAVELLED TRAFFIC LANE DURING NON-WORKING HOURS WITHOUT THE APPROVAL OF CONSTRUCTION COORDINATION.

14. CONTRACTOR SHALL PROVIDE AND MAINTAIN A SAFE AND ADEQUATE MEANS OF CHANNELIZING PEDESTRIAN TRAFFIC AROUND AND THROUGH THE CONSTRUCTION AREA.

15. CONTRACTOR IS RESPONSIBLE FOR OBLITERATION OF ANY CONFLICTING STRIPING AND RESPONSIBLE FOR ALL TEMPORARY STRIPING.

16. CONTRACTOR SHALL MAINTAIN ACCESS TO ALL FACILITIES, BUSINESSES AND/OR RESIDENTS AT ALL TIMES.

17. CONTRACTOR SHALL PROVIDE ACCESS SIGNS FOR BUSINESSES LOCATED WITHIN THE CONSTRUCTION AREA UNDER THE SUPERVISION OF CONSTRUCTION COORDINATION. EACH ACCESS SIGN SHALL HAVE 5 INCH, WHITE OPAQUE LETTERING ON BLUE REFLECTORIZED BACKGROUND. ACCESS SIGNS SHALL BE CONSIDERED INCIDENTAL TO THE BID AND NOT PART OF THE CONTRACT UNLESS OTHERWISE STATED. NO MORE THAN 3 BUSINESSES SHALL BE LISTED ON A ACCESS SIGN. SHOPPING CENTERS AND MALLS SHALL BE LISTED AS SUCH.

18. ALL ADVANCE WARNING SIGNS SHALL MEET THE MINIMUM REFLECTIVE INTENSITY REQUIREMENTS SET FORTH BY THE CITY OF ALBUQUERQUE. CONSTRUCTION COORDINATION SHALL DETERMINE ALL REQUIREMENTS AND APPROVE OR DISAPPROVE ANY ADVANCE WARNING SIGN PER SECTION 6A-4 OF THE MUTCD, LATEST EDITION.

19. 24 HOURS PRIOR TO OCCUPYING OR CLOSING OF A RIGHT-OF-WAY, CONTRACTOR SHALL NOTIFY: POLICE, FIRE DEPARTMENT, SCHOOLS, HOSPITALS, TRANSIT AUTHORITY, BUSINESSES AND/OR RESIDENTS THAT WILL BE AFFECTED BY THE CONSTRUCTION.

20. ANY FIELD ADJUSTMENTS SHALL BE APPROVED BY CONSTRUCTION COORDINATION.

21. EXCAVATIONS SHALL BE PLATED, TEMPORARILY PATCHED OR RESURFACED PRIOR TO OPENING OF TRAFFIC. A MINIMUM OF 11 FEET SHALL BE PROVIDED FOR TRAFFIC IN ANY GIVEN DIRECTION. CONTRACTOR IS RESPONSIBLE FOR ANY WORK INVOLVED IN SATISFYING THESE REQUIREMENTS.

22. CONTRACTOR SHALL AT ALL TIMES COMPLY WITH THE FOLLOWING:
    1. STANDARDS AND REQUIREMENTS SET FORTH IN THE MANUAL ON UNIFORM TRAFFIC CONTROL DEVICES, LATEST EDITION.
    2. THE CITY OF ALBUQUERQUE TRAFFIC CODE, LATEST EDITION.
    3. SECTION 19 OF THE CITY OF ALBUQUERQUE'S STANDARD SPECIFICATIONS FOR PUBLIC WORK CONSTRUCTION, AS WELL AS OTHER SECTIONS.

23. FAILURE TO COMPLY WITH ANY OF THE ABOVE MENTIONED, WILL BE ADEQUATE CAUSE TO CEASE ALL WORK ON ANY CONSTRUCTION PROJECT. WORK WILL NOT RESUME UNTIL ALL REQUIREMENTS ARE ADDRESSED AND APPROVED BY CONSTRUCTION COORDINATION.

24. ALL TRAFFIC CONTROL DEVICES SHALL BE KEPT IN NEW-CLEAN CONDITION. WASHING OF EQUIPMENT IS INCIDENTAL TO IT'S PLACEMENT AND MAINTENANCE.

25. TRAFFIC CONTROL STANDARDS APPLY ONLY WHERE THE CONSTRUCTION TRAFFIC CONTROL PLANS ARE NOT SPECIFIC.

26. ADVANCE WARNING SIGNS SHALL BE 36"x36" WITH SUPER ENGINEERING GRADE SHEETING OR BETTER.

27. CONTRACTOR SHALL MAINTAIN A MINIMUM OF ONE LANE IN ALL DIRECTIONS OF THE UNIVERSITY BOULEVARD/GEORGE ROAD INTERSECTION AT ALL TIMES. IF THIS CANNOT BE ACCOMPLISHED, THEN ALL WORK INVOLVING PARTIAL OR FULL ROAD CLOSURES SHALL OCCUR AT NIGHT BETWEEN 7:00 P.M. AND 6:00 A.M.

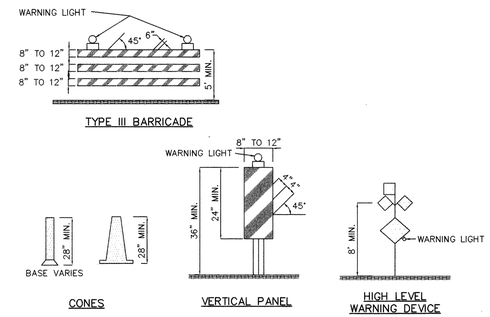

LEGEND

- WORK AREA
- BARRICADE – TYPE I, TYPE II, OR BARREL
- BARRICADE – TYPE III
- X VERTICAL PANEL
- WARNING SIGN
- D DISTANCE BETWEEN SIGNS – A DISTANCE MEASURED IN FEET EQUAL TO A VALUE OF TEN TIMES THE SPEED LIMIT OF THE STREET
- FLAGMAN POSITION
- S SPACING BETWEEN BARRICADES– A DISTANCE MEASURED IN FEET EQUAL TO THE SPEED LIMIT OF THE STREET
- L TAPER LENGTH – SEE CHART BELOW

THE TANGENT LENGTH IS EQUAL TO THE TAPER LENGTH FOR A GIVEN STREET.

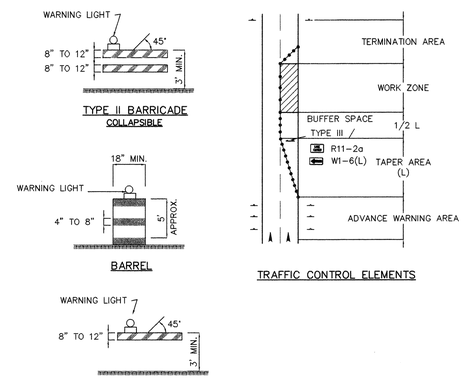

TAPER REQUIREMENTS

SPEED LIMIT (MPH)	TAPER LENGTH (L) (FEET)			MINIMUM NUMBER OF DEVICES FOR TAPER	MAXIMUM DEVICE SPACING IN FEET	
	10' LANE	11' LANE	12' LANE		ALONG TAPER	AFTER TAPER
20	70	75	80	5	20	20
25	105	115	125	6	25	25
30	150	165	180	7	30	30
35	205	225	245	8	35	35
40	270	295	320	9	40	40
45	450	495	540	13	45	45
50	500	550	600	13	50	50
55	550	605	660	13	55	55

RECOMMENDED SIGN SPACING(D) FOR ADVANCE WARNING SIGN SERIES

SPEED MILES PER HOUR	MINIMUM DISTANCE IN FEET BETWEEN SIGNS	FROM LAST SIGN TO TAPER
0–20	10 X SPEED LIMIT	10 X SPEED LIMIT
25–30	10 X SPEED LIMIT	10 X SPEED LIMIT
30–35	10 X SPEED LIMIT	10 X SPEED LIMIT
40–45	10 X SPEED LIMIT	10 X SPEED LIMIT
50–60	10 X SPEED LIMIT	10 X SPEED LIMIT

TAPER CRITERIA

TYPE OF TAPER	TAPER LENGTH
UPSTREAM TAPER:	
MERGING TAPER	L MINIMUM
SHIFTING TAPER	1/2 L MINIMUM
SHOULDER TAPER	1/2 L MINIMUM
TWO-WAY TRAFFIC TAPER	100 FEET MAXIMUM
DOWNSTREAM TAPERS	100 FEET PER LANE

TAPER LENGTH COMPUTATION

SPEED LIMIT	
40 MPH OR LESS	$L = \frac{WS^2}{60}$
45 MPH OR GREATER	$L = W \times S$

L = TAPER LENGTH
W = WIDTH OF OFFSET IN FEET
S = POSTED SPEED OR OFF-PEAK 85-PERCENTILE SPEED IN MPH

SIGN FACE DETAILS

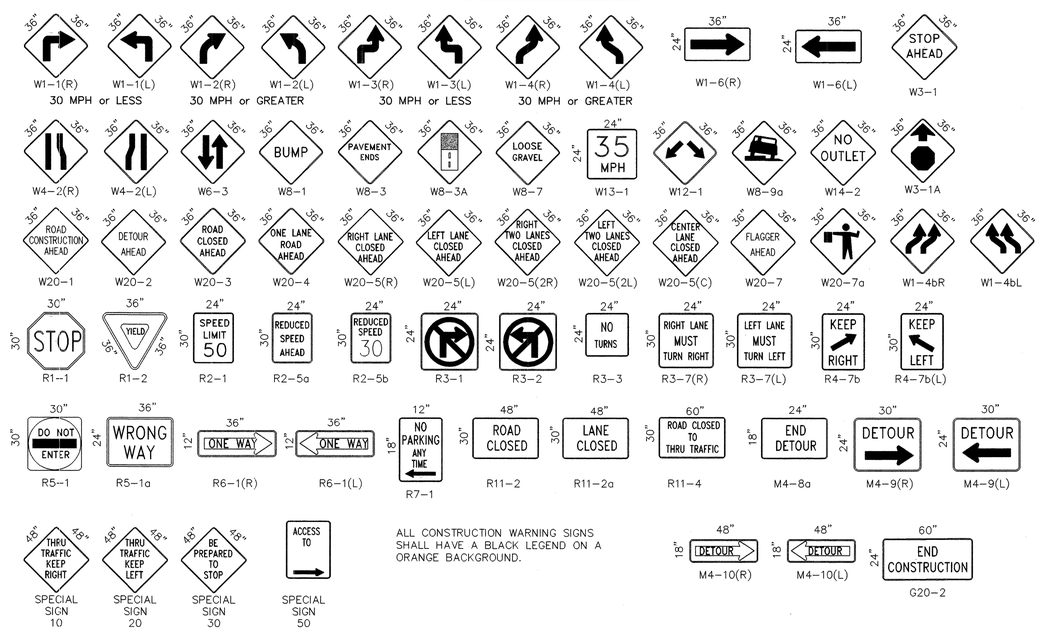

ALL CONSTRUCTION WARNING SIGNS SHALL HAVE A BLACK LEGEND ON A ORANGE BACKGROUND.

6039-TRF.DWG 4/15/98 1"=1'

AS BUILT INFORMATION
CONTRACTOR MARQUEZ SURVEYING CO. INC. DATE 4-1999
WORK STAKED BY MARQUEZ SURVEYING CO. INC. DATE
INSPECTOR'S ACCEPTANCE BY DATE
VERIFICATION BY MARQUEZ SURVEYING CO. INC. DATE 6-22-99
DRAWINGS CORRECTED BY MARQUEZ SURVEYING CO. INC. DATE 8-10-99
MICRO-FILM INFORMATION
RECORDED BY DATE
NO.

BENCH MARKS
ACS BRASS TABLET (CASTINGS: "LIMBAUGH ENGINEERS INC. STAMPED HV-14 RESET 1974 ACS" SET IN TOP OF A CONCRETE POST FLUSH WITH THE GROUND. LOCATED ABOUT 350 FT SOUTH OF VIEWPOINT ROAD, 0.15 MILES WEST OF YALE BLVD.
ELEVATION= 5259.9

SURVEY INFORMATION
FIELD NOTES

NO.	BY	DATE

ENGINEER'S SEAL
DENNIS A. LORENZ NEW MEXICO REGISTERED PROFESSIONAL ENGINEER 5-15-98

NO.	DATE	REMARKS	BY
		REVISIONS	
		DESIGN	
		DESIGNED BY D.A.L.	DATE 2/97
		DRAWN BY A.S.C.	DATE 2/97
		CHECKED BY D.A.L.	DATE 2/97

BRASHER & LORENZ, INC.
Consulting Engineers
2201 San Pedro NE Building 1 Suite 210
Albuquerque, New Mexico 87110
Ph: 505-888-6088 Fax: 505-888-6188

CITY OF ALBUQUERQUE
PUBLIC WORKS DEPARTMENT
ENGINEERING DEVELOPMENT GROUP

TITLE: SUNPORT PARK
TRAFFIC CONTROL PLAN

Design Review Committee: APPROVED JUL 29 1998 DESIGN REVIEW COMMITTEE
City Engineer Approval
Last Design Update | Mo./Day/Yr. | Mo./Day/Yr.

City Project No. 5651.82 | Zone Map No. M-15 | Sheet 24 Of 26 24

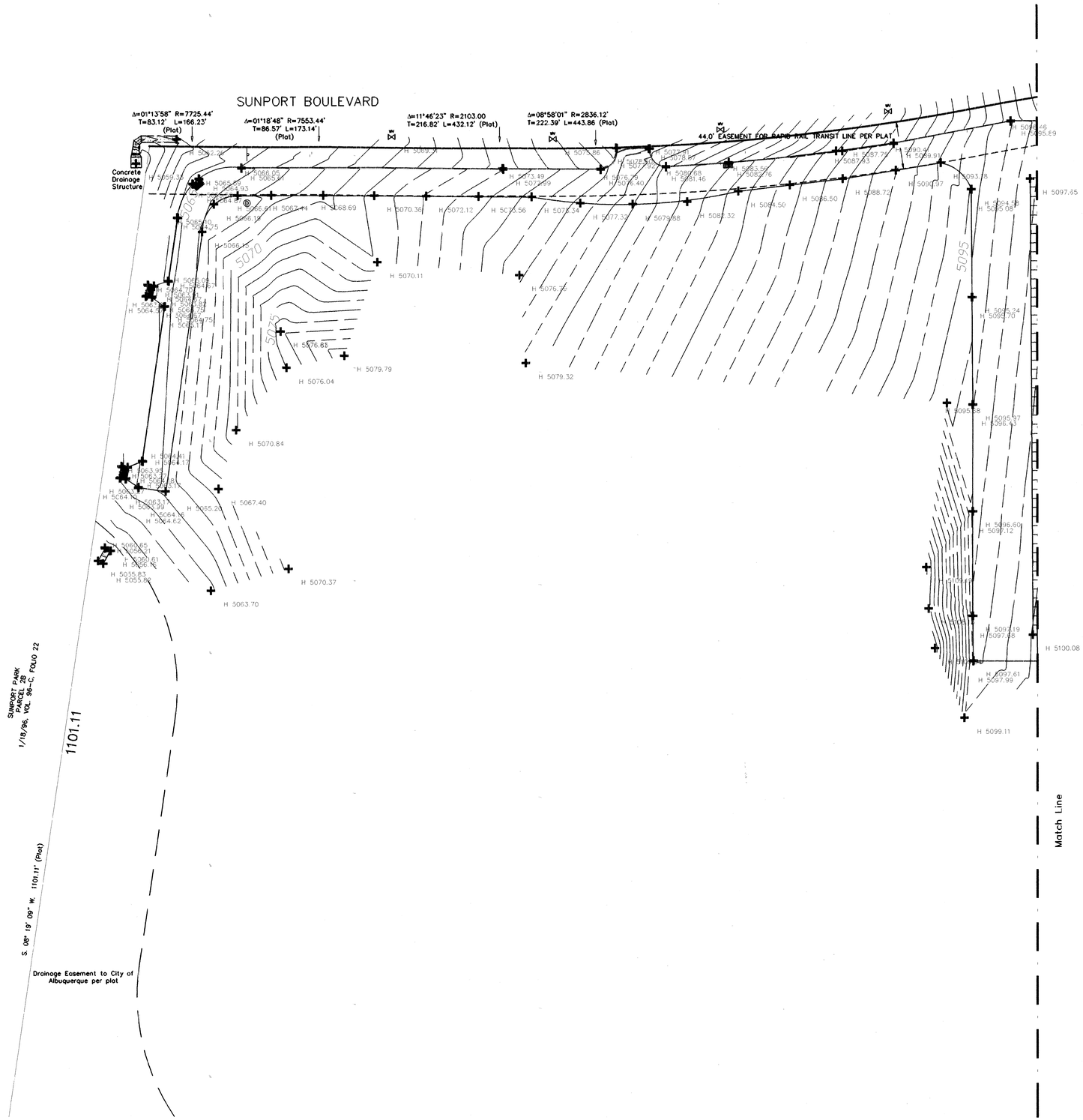

As-Built
Sunport Park
Phase I
August, 1999

LEGEND

- Utility Pole
- Guy Wire
- Light Pole
- Light Pole w/ Bollards
- Electrical Boxes (denoted EB)
- Signal Control Box
- Traffic Signal Mast
- Single Pole Sign
- Double Pole Sign
- City Water Valve
- Irrigation Hydrant
- Water Meter
- Fire Hydrant
- Drop Inlet
- Irrigation Control Valve (Note: Smaller scale than city valve)
- Manhole
- Parking Barrier
- Access Control Arm
- Ticket Dispenser
- Card Reader
- Pay Booth
- Denotes Underground Cable as evidenced by signs
- Denotes Easements of Record
- Denotes Chain Link Fence
- E

ENGINEER'S CERTIFICATION

I, the undersigned, being a Professional Engineer in the State of New Mexico, do hereby certify that this drawing was prepared by me or under my supervision, and that the as-built information shown on Sheets 25 and 26 is based on actual field measurements performed by Marquez Surveying Co., Inc, and inspections performed by Brasher & Lorenz, Inc. I further certify that, as of this date, the as-built condition of the site is in substantial compliance with the approved Grading and Drainage Plan prepared by Brasher & Lorenz, Inc., dated March 17, 1998.

This certification is limited to on-site grading and drainage improvements and does not extend to the structural integrity of the materials used nor the workmanship of the contractor. Any future modifications to the site improvements shall render this certification null and void.

12-2-99

Dennis A. Lorenz, NMPE 9647 — Date

Marquez Surveying Co., Inc.
Main Office: 902 Fifth Street, NW
Albuquerque, NM 87102
505 842-6579 Fax: 246-9106

Western Branch: P. O. Box 11
Bluewater, NM 87030
505 876-2684

As-Built
Sunport Park
Phase I
August, 1999

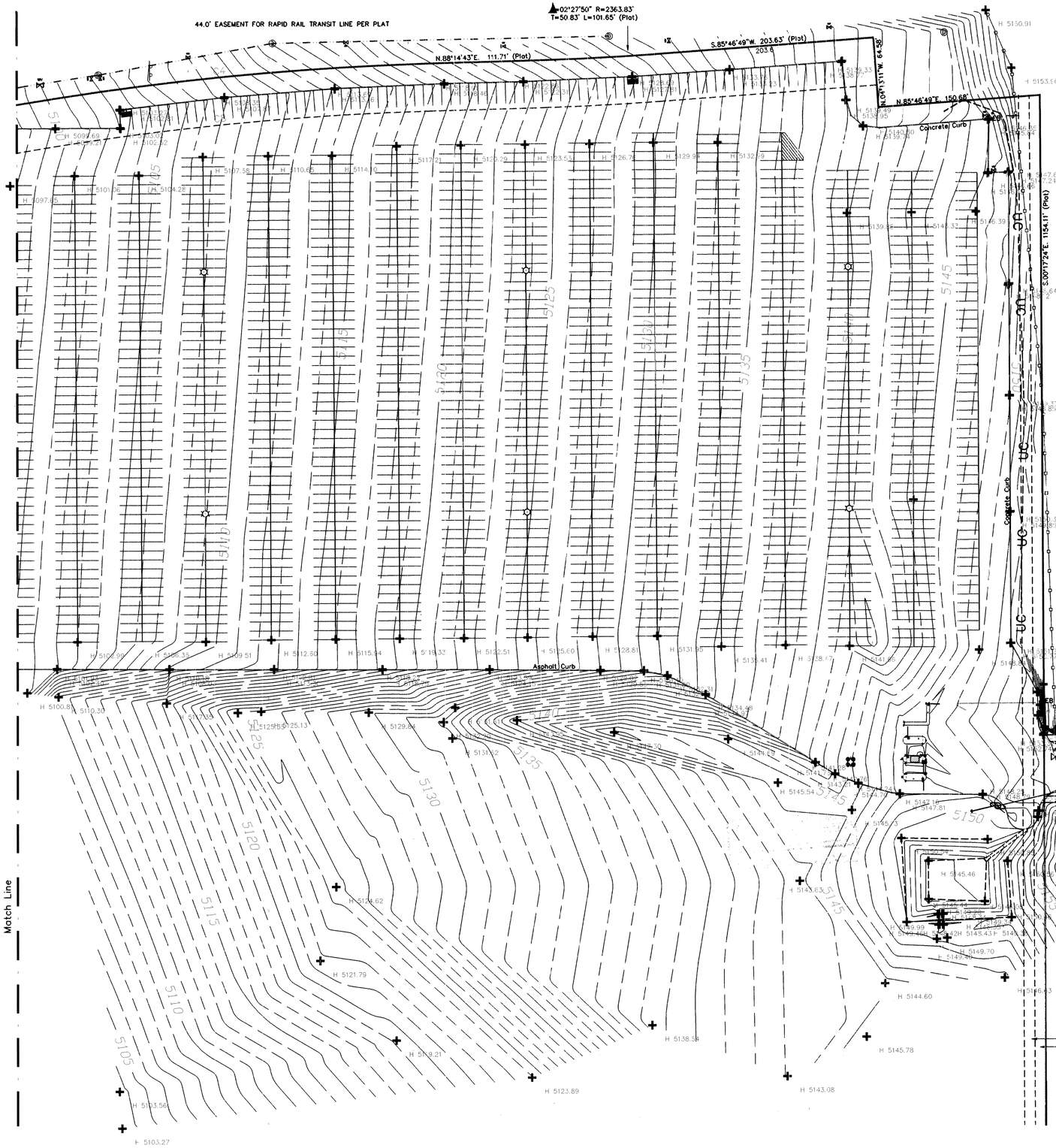

GRAPHIC SCALE

0 50 75 100 200 400

(IN FEET)
1 inch = 50 ft.

ENGINEER'S CERTIFICATION

I, the undersigned, being a Professional Engineer in the State of New Mexico, do hereby certify that this drawing was prepared by me or under my supervision, and that the as-built information shown on Sheets 25 and 26 is based on actual field measurements performed by Marquez Surveying Co., Inc, and inspections performed by Brasher & Lorenz, Inc. I further certify that, as of this date, the as-built condition of the site is in substantial compliance with the approved Grading and Drainage Plan prepared by Brasher & Lorenz, Inc., dated March 17, 1998.

This certification is limited to on-site grading and drainage improvements and does not extend to the structural integrity of the materials used nor the workmanship of the contractor. Any future modification to the site improvements shall render this certification null and void.

12-2-99

Dennis A. Lorenz, NMPE 9641 — Date

Marquez Surveying Co., Inc.

Main Office: 902 Fifth Street, NW
Albuquerque, NM 87102
505 842-6579 Fax: 246-9106

Western Branch: P. O. Box 11
Bluewater, NM 87030
505 876-2684

AZBLT-SUNPORT-699RF.dwg 8-2-99 3:57:52 pm EST