COUNTY OF BERNALILLO, NEW MEXICO

ENVIRONMENTAL HEALTH AND PUBLIC WORKS DEPARTMENTS

CONSTRUCTION PLANS
FOR

NORTH VALLEY AREAS B AND F VACUUM PUMP STATION

WILSON PROJECT NUMBER
96-210-034

CITY PROJECT NUMBER
567292

BERNALILLO COUNTY PROJECT

INDEX OF DRAWING SHEETS

PROJECT LOCATION

VICINITY MAP
N.T.S.
ZONE ATLAS MAP B-16Z

APPROVAL OF RECORD DRAWINGS
CHIEF CONSTRUCTION ENGINEER
DATE 6-27-07

APPROVAL BY:

5-6-99
BERNALILLO COUNTY PUBLIC WORKS DIVISION DATE

5-6-99
BERNALILLO COUNTY PUBLIC WORKS DIVISION DATE

APPROVAL BY:

5/7/99
CITY OF ALBUQUERQUE CITY ENGINEER DATE

5/6/99
CITY OF ALBUQUERQUE DRC CHAIRMAN DATE

5/6/99
CITY OF ALBUQUERQUE PUBLIC WORKS DEPARTMENT DATE

5-6-99
CITY OF ALBUQUERQUE WWTP PLANT MANAGER DATE

REV	SHEETS	CITY ENGINEER	DATE	USER DEPT.	DATE	USER DEPT.

ENGINEER'S SEAL

ROBERT J. PAULETTE
NEW MEXICO
12763
REGISTERED PROFESSIONAL ENGINEER

WILSON & COMPANY
4775 INDIAN SCHOOL ROAD N.E.
SUITE 200
ALBUQUERQUE, NEW MEXICO 87110
(505) 254-4000

APPROVED FOR CONSTRUCTION

PROJECT No. 96210034

WILSON & COMPANY X:\PUBLIC\PROJECTS\96034\DRAWINGS\VACSTA\6034VS01.DWG

MISCELLANEOUS

THE CONTRACTOR SHALL NOTIFY THE BERNALILLO COUNTY PUBLIC WORKS DEPARTMENT TRAFFIC CONTROL MANAGER, FIRE DEPARTMENT AND SHERIFF'S DEPARTMENT IN WRITING A MINIMUM OF FIVE (5) WORKING DAYS PIOR TO ANY STREET CLOSURES, IF REQUIRED, AND PRIOR TO ANY WORK WITHIN COUNTY RIGHT-OF-WAY.

PRIOR TO CONSTRUCTION THE CONTRACTOR SHALL EXCAVATE AND VERIFY THE HORIZONTAL AND VERTICAL LOCATIONS OF ALL OBSTRUCTIONS. SHOULD A CONFLICT EXIST, THE CONTRACTOR SHALL NOITIFY THE ENGINEER SO THAT THE CONFLICT CAN BE RESOLVED WITH A MINIMUM AMOUNT OF DELAY.

THE CONTRACTOR SHALL PROVIDE CONSTRUCTION STAKING FROM BASELINES, GRADES AND BENCH MARKS SHOWN ON THE PLANS, OR AS DETERMINED IN THE FIELD BY THE ENGINEER. REESTABLISHMENT OF LOST, MISSING, OR DISTURBED REFERENCE POINTS SHALL BE PERFORMED BY THE ENGINEER AT THE CONTRACTOR'S EXPENSE.

THE CONTRACTOR SHALL BE RESPONSIBLE FOR MAINTAINING ALL EXCAVATIONS IN A SAFE CONDITION.

THE CONTRACTOR SHALL COORDINATE HIS CONSTRUCTION ACTIVITIES WITH ALL OTHER CONTRACTORS AND UTILITY COMPANIES WORKING IN THE SAME AREA. THE CONTRACTOR MAY BE REQUIRED TO RESCHEDULE ACTIVITIES TO ALLOW UTILITY CREWS TO PERFORM THEIR REQUIRED WORK. NO ADDITIONAL COMPENSATION WILL BE ALLOWED FOR DELAYS OR INCONVENIENCE CAUSED BY UTILITY WORK CREWS.

LIMIT CONSTRUCTION ACTIVITIES TO WITHIN PERMANENT AND CONSTRUCTION EASEMENTS ON PRIVATE PROPERTY SHOWN ON DRAWINGS.

THE CONTRACTOR IS RESPONSIBLE FOR REMOVAL AND DISPOSAL OF ALL DEMOLITION DEBRIS. SALVAGED MATERIAL IS NOT ANTICIPATED. MATERIALS SHALL BE DISPOSED OF IN APPROVED WASTE AREAS SECURED BY AND AT THE EXPENSE OF THE CONTRACTOR.

PROJECT SIGN SHALL BE ERECTED, AND SHALL BE LOCATED AT THE SOUTHWEST CORNER OF THE SITE FACING SOUTH. SEE SPECIFICATIONS FOR SIGN REQUIREMENTS.

UTILITIES

A MINIMUM OF TWO (2) WORKING DAYS, BUT NOT MORE THAN TWENTY (20) WORKING DAYS PRIOR TO ANY EXCAVATION AT A PARTICULAR LOCATION, THE CONTRACTOR MUST CONTACT N.M. ONE-CALL SYSTEM, 260-1990, FOR LOCATION OF EXISTING UTILITIES.

IN ADVANCE OF CONSTRUCTION OPERATIONS, THE CONTRACTOR SHALL BE RESPONSIBLE FOR DETERMINING WHETHER OVERHEAD UTILITY LINES, SUPPORT STRUCTURES, POLES, GUYS, ETC., ARE AN OBSTRUCTION TO CONSTRUCTION OPERATIONS. IF ANY OBSTRUCTION TO CONSTRUCTION OPERATIONS IS EVIDENT, THE CONTRACTOR SHALL BE RESPONSIBLE FOR COORDINATION. ALL MOVING OR RELOCATION COSTS SHALL BE CONSIDERED INCIDENTAL.

ALL WATER VALVE BOXES AND SEWER MANHHOLES WITHIN PAVEMENT AREAS ARE TO BE ADJUSTED TO FINISH GRADE PER C.O.A. STANDARD DETAILS. THIS WORK WILL BE CONSIDERED INCIDENTAL TO CONTRUCTION.

THE CONTRACTOR SHALL COORDINATE ANY WATER VALVE SHUT-OFF OPERATION WITH THE WATER SYSTEMS DIVISION (857-8200) NOT LESS THAN THREE (3) WORKING DAYS PRIOR TO INITIATING ANY WORK AFFECTING EXISTING WATER UTILITIES. WATER SERVICE SHALL BE MAINTAINED TO ALL CUSTOMERS DURING CONSTRUCTION.

CONTRACTOR IS TO SUPPORT AND MAINTAIN THE INTEGRITY OF ALL UNDERGROUND TELEPHONE, ELECTRIC, AND CABLE TELEVISION UTILITIES AT NO ADDITIONAL COST TO THE OWNER. EXPOSED CABLE IS TO BE SUPPORTED EVERY 15' (MIN.) CONTRACTOR SHALL COORDINATE WITH AND MAKE NECESSARY PAYMENT (IF ANY) TO UTILITY OWNER FOR DE-ENERGIZATION OF CABLES OR SUPPORT OF CABLES BY THE UTILITY OWNER. COST FOR SAID WORK WILL BE CONSIDERED INCIDENTAL TO ALL OTHER COSTS.

THE CONTRACTOR SHALL SUPPORT AND MAINTAIN THE INTEGRITY OF ALL GAS LINES. NO ADDITIONAL PAYMENT WILL BE MADE FOR THIS WORK. GAS LINES THAT MUST BE RELOCATED ARE TO BE COORDINATED WITH THE UTILITY OWNER FOR RELOCATION AND WILL BE CONSIDERED INCIDENTAL TO ALL OTHER COSTS.

ALL ABANDONED UTILITY LINES THAT ARE EXPOSED AS AS A RESULT OF CONSTRUCTION SHALL BE REMOVED AND DISPOSED OF BY THE CONTRACTOR. THIS WORK SHALL BE CONSIDERED INCIDENTAL TO THE PROJECT.

ALL TEMPORARY WATERLINE AND TEMPORARY CAPPING AND BLOCKING OF EXISTING WATERLINE REQUIRED FOR THE INSTALLATION OF ANY TEMPORARY WATERLINE SHALL BE CONSIDERED INCIDENTAL TO THE PROJECT.

SUPPORT, MAINTAIN, OR TEMPORARILY RELOCATE BNSF SIGNAL CABLES ABOVE GROUND DIRECTLY WEST OF SITE. COST SHALL BE CONSIDERED INCIDENTAL TO THE PROJECT.

VACUUM MAIN LOCATIONS SHOWN ON THE PLANS ARE BEING CONSTRUCTED IN A SEPARATE CONTRACT. COORDINATE WITH OTHER CONTRACTORS FOR FINAL LOCATION.

DESIGN CRITERIA:

DESIGN SHALL BE ACCORDING TO THE 1994 UNIFORM BUILDING CODE

DESIGN LIVE LOADS –
HIGH ROOF 15 PSF
LOW ROOF 50 PSF

DESIGN DEAD LOADS –
LOW ROOF 18 PSF(EXCLUDING PRECAST HOLLOW CORE SLAB UNITS)

GEOTECHNICAL:
GEOTECHNICAL INFORMATION BASED UPON REPORT BY AGRA EARTH & ENVIRONMENTAL REPORT # 6-517-214 DATED FEBRUARY 28, 1997

WIND LOADS:
WIND LOADS BASED UPON BASIC SPEED OF 80 MPH

SEISMIC DESIGN:
SEISMIC DESIGN BASED UPON SEISMIC ZONE 2B
IMPORTANCE FACTOR IS 1.0

GENERAL

1. DESIGN IS IN ACCORDANCE WITH THE 1997 EDITION OF THE UNIFORM BUILDING CODE AND ITS LATEST SUPPLEMENTS, EXCEPT WHERE OTHER APPLICABLE CODES OR THE FOLLOWING NOTES ARE MORE RESTRICTIVE.
2. CONSTRUCTION SHALL BE AS INDICATED IN THE APPLICABLE TYPICAL DETAILS AND GENERAL NOTES. TYPICAL DETAILS ARE MEANT TO APPLY EVEN THOUGH NOT REFERENCED AT SPECIFIC LOCATIONS OR IN SPECIFIC DRAWINGS, UNLESS OTHERWISE NOTED.
3. STRUCTURAL DIMENSIONS AND PENETRATIONS CONTROLLED BY OR RELATED TO MECHANICAL OR ELECTRICAL EQUIPMENT SHALL BE VERIFIED BY THE CONTRACTOR PRIOR TO CONSTRUCTION.
4. MECHANICAL AND ELECTRICAL EQUIPMENT SUPPORTS, ANCHORAGES, OPENINGS, RECESSES AND REVEALS NOT SHOWN ON THE STRUCTURAL DRAWINGS BUT REQUIRED BY OTHER CONTRACT DRAWINGS SHALL BE PROVIDED AND VERIFIED BY CONTRACTOR PRIOR TO PLACING STRUCTURAL COMPONENTS.
5. STRUCTURAL DRAWINGS SHALL BE USED IN COORDINATION WITH MECHANICAL, ELECTRICAL, ARCHITECTURAL, CIVIL DRAWINGS AND SHOP DRAWINGS PROVIDED BY MANUFACTURERS OF EQUIPMENT.
6. STRUCTURES HAVE BEEN DESIGNED FOR OPERATIONAL LOADS ON THE COMPLETED STRUCTURES. DURING CONSTRUCTION, THE STRUCTURES SHALL BE PROTECTED BY BRACING AND SHORING WHEREVER EXCESSIVE CONSTRUCTION LOADS MAY OCCUR.
7. HANDRAILS, STAIRS AND LADDERS SHALL CONFORM TO LATEST OSHA REQUIREMENTS.

FOUNDATION AND SLAB ON GRADE

1. SEE MECHANICAL AND ELECTRICAL DRAWINGS FOR SLEEVES AND OPENINGS IN FOUNDATION AND SLAB.
2. NO BACKFILL SHALL BE PLACED AGAINST ANY STRUCTURE WALL, UNTIL THE WALL HAS REACHED FULL STRENGTH AND THE PERMANENT HOLLOW CORE SLAB UNITS ARE SECURED IN PLACE.

CONCRETE

1. ALL STRUCTURAL CONCRETE SHALL DEVELOP A MINIMUM COMPRESSIVE STRENGTH OF 4000 PSI IN 28 DAYS. UNLESS OTHERWISE NOTED, ALL CONCRETE CONSTRUCTION, INCLUDING BENDING OF BARS, SHALL COMPLY WITH A.C.I. "BUILDING CODE REQUIREMENTS FOR STRUCTURAL CONCRETE" (A.C.I. 318-95) AND CURRENT CRSI STANDARDS.
2. LOCATION OF ALL CONSTRUCTION JOINTS AND CONTROL JOINTS SHALL BE AS SHOWN ON THE DRAWINGS OR APPROVED BY THE ENGINEER. CONSTRUCTION JOINTS SHALL BE THOROUGHLY CLEANED FOR BOND. PROVIDE WATERSTOP AT ALL CONSTRUCTION JOINTS BELOW GRADE.
3. REINFORCEMENT STEEL SHALL BE DEFORMED BARS CONFORMING IN QUALITY TO THE REQUIREMENT OF THE SPECIFICATIONS FOR DEFORMED BILLET-STEEL BARS FOR CONCRETE REINFORCEMENT, ASTM DESIGNATION A615, GRADE 60.
4. UNLESS SHOWN OTHERWISE, ALL DOWELS SHALL BE SAME SIZE AND SPACING AS THE REINFORCEMENT WHICH IS TO BE SPLICED TO THE DOWELS. DOWELS SHALL BE FIRMLY HELD IN POSITION.
5. SEE ARCHITECTURAL, MECHANICAL AND ELECTRICAL DRAWINGS FOR EMBEDDED ITEMS AND OPENINGS NOT SHOWN ON STRUCTURAL DRAWINGS.
6. PLACE TWO NUMBER FIVE BARS AROUND PENETRATIONS IN CONCRETE WALLS. EXTEND BARS BEYOND OPENING. SEE DETAIL THIS SHEET.
7. CONCRETE COVER AND REINFORCEMENT SHALL BE AS INDICATED ON DRAWINGS. IF NOT INDICATED, ACI 318-95 SHALL GOVERN.
8. THE REINFORCING BARS FOR ALL SLABS, BEAMS AND COLUMNS SHALL HAVE A MINIMUM EXTENSION OR ANCHORAGE INTO SUPPORTS IN ACCORDANCE WITH A.C.I. CODE (318-95).
9. BARS SUPPORTS AND SPACERS SHALL BE PROVIDED IN ACCORDANCE WITH A.C.I. CODE.
10. REINFORCING BARS AND ACCESSORIES SHALL NOT BE IN CONTACT WITH ANY PIPE, PIPE FLANGE OR METAL PARTS EMBEDDED IN CONCRETE. A MINIMUM OF 2 INCHES CLEARANCE SHALL BE PROVIDED AT ALL TIMES.
11. STIRRUP SUPPORT BARS SHALL BE PROVIDED BETWEEN ENDS OF TOP BARS AS REQUIRED.
12. ALL STEEL EMBEDDED ITEMS SHALL BE HOT DIP GALVANIZED UNLESS NOTED OTHERWISE.
13. ALL DETAILING, FABRICATION AND PLACING OF REINFORCING BARS, UNLESS OTHERWISE NOTED, SHALL BE IN ACCORDANCE WITH THE MANUAL OF STANDARD PRACTICE FOR DETAILING REINFORCED CONCRETE STRUCTURES A.C.I.-315 LATEST EDITION.

MASONRY

1. CONCRETE MASONRY UNITS SHALL CONFORM TO ASTM C-90 GRADE N-1 . ALL CELLS SHALL BE GROUTED SOLID, UNLESS OTHERWISE NOTED.
2. ASSEMBLED MASONRY SHALL HAVE A MINIMUM f'm = 1700 psi .
3. ALL CONCRETE BLOCKS SHALL BE LAID IN COMMON BOND UNLESS OTHERWISE SHOWN
4. ALL REINFORCING BARS SHALL BE CONTINUOUS UNLESS OTHERWISE SHOWN. LAP BARS 48 DIAMETERS AT SPLICES UNLESS A GREATER SPLICE IS NOTED. STAGGER SPLICES WHERE POSSIBLE.
5. WALL REINFORCEMENT SHALL BE PLACED AND GROUTED AS REQUIRED IN THE SPECIFICATIONS. UNLESS OTHERWISE SHOWN ON PLANS, ALL WALLS SHALL BE REINFORCED WITH A MINIMUM REINFORCING AS FOLLOWS:
   12" WALLS – #6 AT 24" E.F. VERT.,
   2- #5 IN BOND BEAMS
6. ALL VERTICAL REINFORCING SHALL BE SPLICED TO THE FOOTING DOWELS. A VERTICAL BAR SHALL BE PLACED AT ALL WALL CORNERS AND WALL INTERSECTIONS. PROVIDE 2-#5 VERTICAL BARS ON EACH SIDE OF WALL OPENINGS.
7. ALL DOWELS SHALL BE THE THE SAME SIZE AS WALL REINFORCEMENT AND SHALL LAP 48 DIAMETER AND EXTEND INTO THE FOOTING A MINIMUM OF 24 DIAMETERS, OR EXTEND INTO THE FOOTING A MINIMUM OF 12 DIAMETERS AND HAVE A STANDARD HOOK.
8. THE BARS IN HORIZONTAL LAP SPLICES SHALL BE ALIGNED VERTICALLY AND TIED. STAGGER SPLICES.
9. ALL OPENINGS SHALL HAVE A BOND BEAM AT THE TOP AND BOTTOM REINFORCED WITH 2-#6 FOR 8" WALLS AND 3-#6 FOR 12" WALLS. REINFORCEMENT SHALL EXTEND 36" BEYOND WALL OPENINGS.

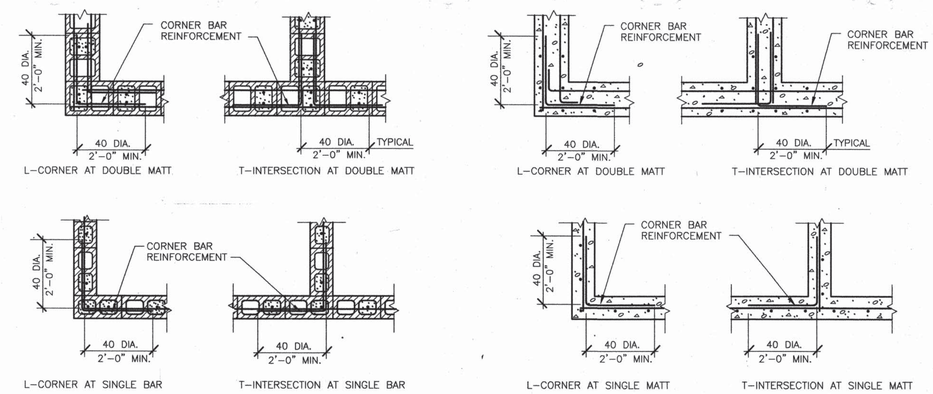

NOTE: CORNER BARS ARE SAME SIZE AND SPACING AS HORIZONTAL BOND BEAM REINF., BOND BEAM REINF. BARS MAY BE BENT AT CORNER IN LIEU OF CORNER BARS

TYPICAL MASONRY CORNER DETAILS

NOT TO SCALE

NOTE: CORNER BARS ARE SAME SIZE AND SPACING AS HORIZONTAL BARS, MAIN REINF. BARS MAY BE BENT AT CORNER IN LIEU OF CORNER BARS

TYPICAL CONCRETE CORNER DETAILS

NOT TO SCALE

BERNALILLO COUNTY TRAFFIC CONTROL GENERAL NOTES

1. SUBJECT TO THE APPROVED TRAFFIC CONTROL PLAN, AT LEAST ONE LANE SHALL BE OPEN TO TRAFFIC AT ALL TIMES. CONTRACTOR SHALL PROVIDE PROPER SIGNAGE & FLAGMEN AND SHALL MAINTAIN THE TRAFFIC LANES IN SUCH A MANNER AS TO ASSURE PROPERTY SAFETY TO THE TRAVELING PUBLIC ON ALL AFFECTED ROADS. THE CONTRACTOR SHALL PROVIDE ACCESS TO ALL PRIVATE & PUBLIC PROPERTY AT ALL TIMES, EXCEPT WHEN GRADING, PAVING, EXCAVATION & BACK-FILL OPERATIONS ARE BEING CONDUCTED IMMEDIATELY IN FRONT OF THE PROPERTY, IN WHICH CASE ACCESS WILL NOT BE DENIED FOR MORE THAN 4 HOURS WITHOUT APPROVAL BY THE COUNTY.
2. TRAFFIC LANES PROVIDED DURING CONSTRUCTION SHALL BE MAINTAINED, IN SUCH A CONDITION UNDER ALL WEATHER CONDITIONS, SO AS TO PERMIT THE REASONABLE PASSAGE OF PASSENGER VEHICLES, AND SHALL BE KEPT GRADED & SMOOTH, AND WATERED SEVERAL TIMES DAILT TO CONTROL DUST.
3. A DAILY TRAFFIC CONTROL LOG SHALL BE MAINTAINED BY THE CONTRACTOR REFLECTING THE TYPES & LOCATIONS OF ALL TRAFFIC CONTROL DEVICES, SIGNS, BARRICADES, ETC. BEING USED ON THE PROJECT IN COMPLIANCE WITH THE APPROVED TRAFFIC CONTROL PLAN. THIS LOG SHALL BE SUBMITTED TO THE BERNALILLO COUNTY TRAFFIC CONTROL MANAGER UPON COMPLETION OF THE PROJECT CONSTRUCTION OR WHEN SO REQUESTED BY THE PROJECT OR THE BERNALILLO COUNTY TRAFFIC CONTROL MANAGER.
4. ALL NEW STREET PAVING ABUTTING EXISTING AREAS SHALL MATCH THE ELEVATIONS OF THOSE AREAS.
5. CONTRACTOR SHALL PROVIDE A WEEKLY CONSTRUCTION ACTIVITY SCHEDULE TO BERNALILLO COUNTY PUBLIC WORKS DEPARTMENT, ATTN: HOSS FOSTER.
6. PROJECT IS SUBJECT TO THE REQUIREMENTS OF COUNTY ORDINANCE NO. 95-12 & 83-28. THE CONTRACTOR IS RESPONSIBLE FOR ACQUIRING ALL NECESSARY PERMITS. CONTRACTOR SHALL CALL 848-1500 FOR MORE INFORMATION.
7. **THE CONTRACTOR SHALL SUBMIT A TRAFFIC CONTROL PLAN TO THE COUNTY TRAFFIC CONTROL MANAGER AT LEAST 48 HOURS PRIOR TO COMMENCEMENT OF WORK. TRAFFIC CONTROL PLANS SHALL BE PREPARED IN ACCORDANCE WITH MUTCD REQUIREMENTS AND BY CERTIFIED PERSONNEL AND MUST BE APPROVED PRIOR TO COMMENCEMENT OF WORK ON THE PROJECT. CALL 848-1504 FOR FURTHER INFORMATION.**
8. THE CONTRACTOR SHALL FILE WEEKLY WRITTEN REPORTS TO THE TRAFFIC CONTROL MANAGER DESCRIBING THE TRAFFIC CONTROL PLAN THAT WILL BE IN EFFECT FOR THE FOLLOWING WEEK.
9. MAINTAIN 2-WAY TRAFFIC ON ALAMEDA ROAD DURING NON-WORKING HOURS.

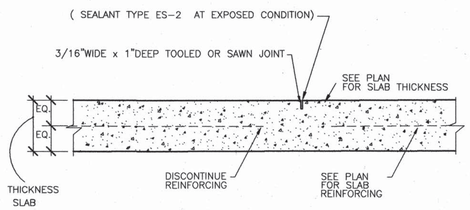

TYPICAL SAW CUT JOINT DETAIL

NO SCALE

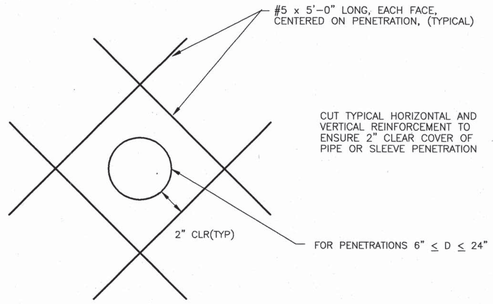

TYPICAL CONCRETE WALL PENETRATION

NOT TO SCALE

CITY PROJECT #567292

AS-BUILT INFORMATION
CONTRACTOR TRIAD BUILDERS OF NM
WORK STAMPED BY TRIAD DATE 11/99
INSPECTOR'S ACCEPTANCE BY WILSON & CO. DATE 3/00
FIELD VERIFICATION BY B. Gonzales DATE 6/00
REDLINE DRAWINGS CORRECTED BY WILSON & CO. DATE 9/00
MICRO-FILM INFORMATION
RECORDED BY DATE
NO.
COA Inspect B. Smith

BENCH MARKS

SURVEY INFORMATION
FIELD NOTES
NO. BY DATE

ENGINEER'S SEAL
ROBERT J. PAULETTE NEW MEXICO 12763 PROFESSIONAL ENGINEER
1/4/99

NO.	DATE	REMARKS	BY

REVISIONS

WILSON & COMPANY, ENGINEERS & ARCHITECTS
DESIGNED BY HMK DATE 1/4/99
DRAWN BY DATE 1/4/99
CHECKED BY JDC DATE 1/4/99

COUNTY OF BERNALILLO
ENVIRONMENTAL HEALTH AND
PUBLIC WORKS DEPARTMENTS

BERNALILLO COUNTY STATE OF NEW MEXICO

NORTH VALLEY AREAS B AND F
VACUUM STATION

GENERAL NOTES

PROJECT NO. 96034 | SHEET 2 OF 19

WILSON & COMPANY X:\PUBLIC\PROJECTS\96034\DRAWINGS\VACSTA\STRUCT\6034VS-SHT2.DWG

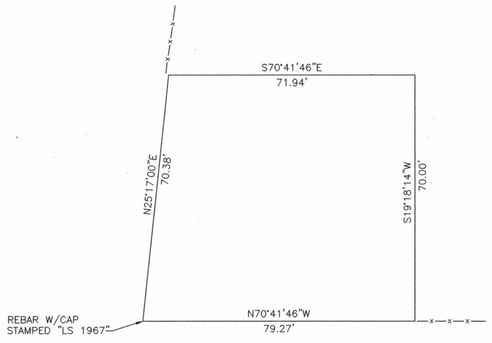

LOT PLAN

SCALE: 1" = 10'

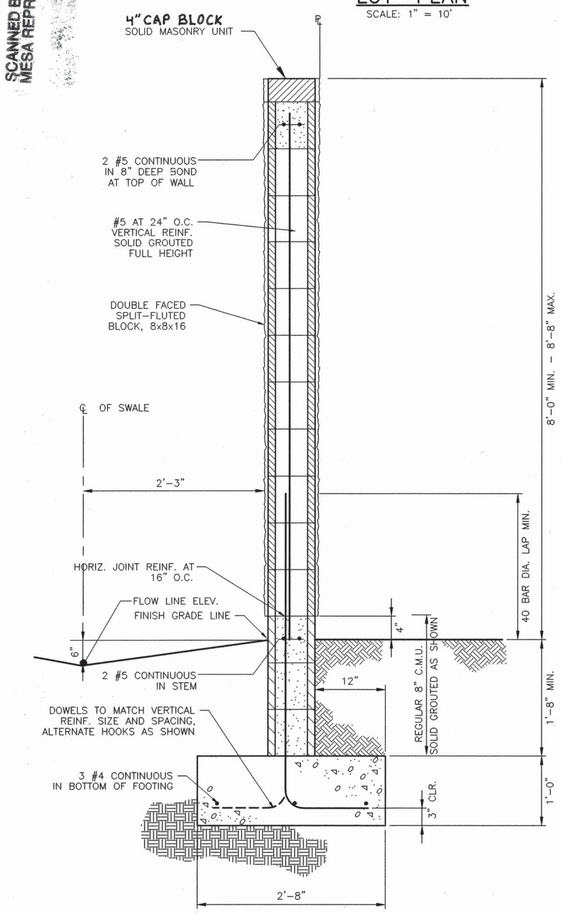

SECTION AT SITE WALL

(1/3 3) 1" = 1'-0"

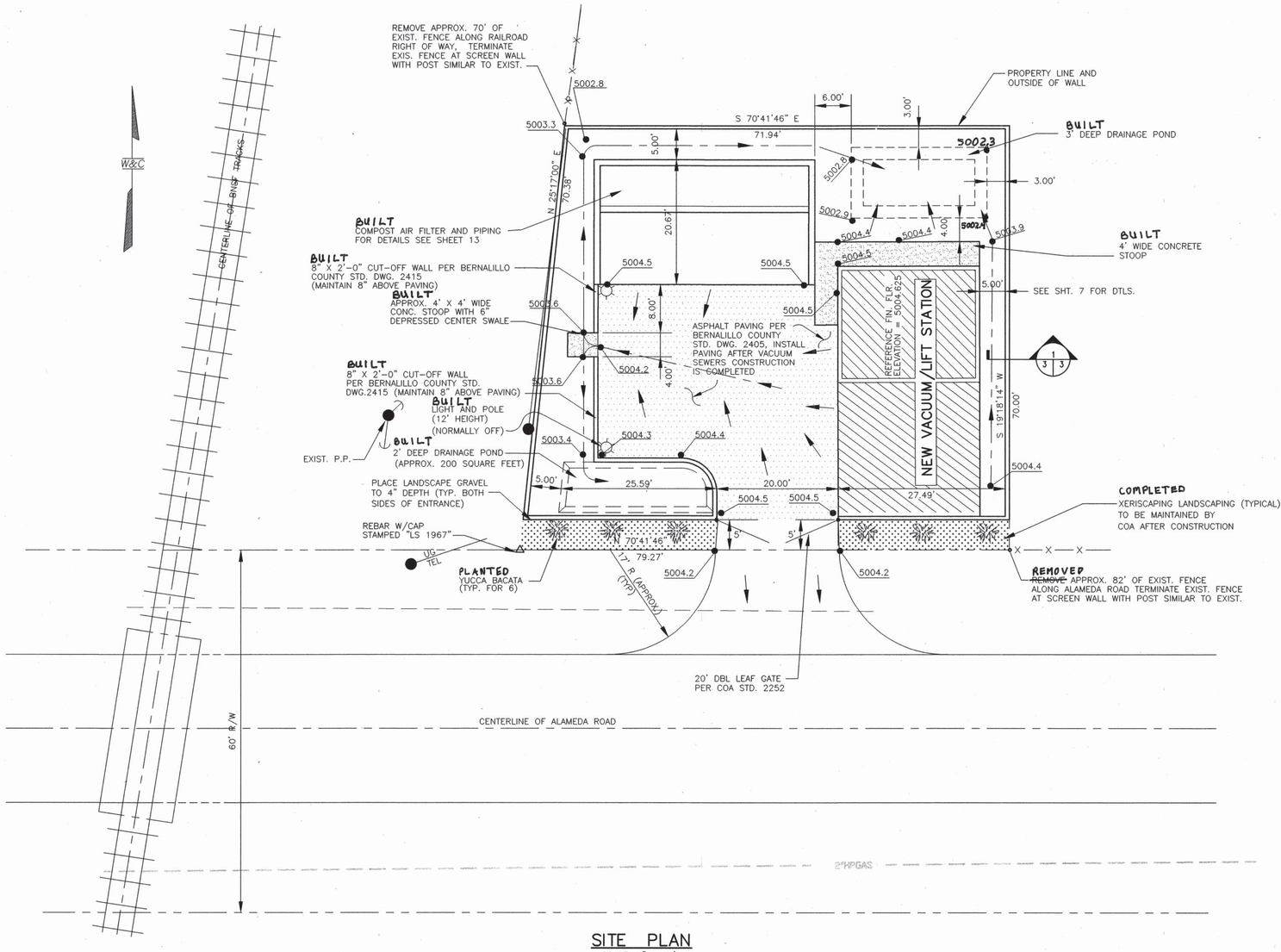

SITE PLAN

SCALE: 1" = 10'

AS-BUILT INFORMATION
CONTRACTOR: TRIAD BUILDERS OF NM
WORK STAKED BY: TRIAD DATE 11/99
INSPECTION'S PERFORMED BY: WILSON & CO. DATE 3/00
FIELD INSPECTION BY: DATE
DRAWINGS CORRECTED BY: WILSON & CO. DATE 9/00
MICRO-FILM INFORMATION
RECORDED BY: DATE
NO.

BENCH MARKS
BENCHMARK USED IS A WILSON & CO. ALUMINUM CAP STAMPED "HZ 58" LOCATED AT THE N.W. CORNER OF ALAMEDA ROAD AND THE BNSF RAILROAD TRACKS. ±43' WEST OF THE CENTERLINE OF THE BNSF TRACKS. ELEV. = 5003.09

SURVEY INFORMATION
FIELD NOTES

NO.	BY	DATE

ENGINEER'S SEAL
ROBERT J. PAULETTE NEW MEXICO 12763 REGISTERED PROFESSIONAL ENGINEER

NO.	DATE	REMARKS	BY
2	9/29/00	ELEV. + CAP BLOCK	APR
1	9/3/99	RELOCATED PUMP STATION	RJP

REVISIONS

WILSON & COMPANY, ENGINEERS & ARCHITECTS
DESIGNED BY RJP DATE 1/4/99
DRAWN BY PRD DATE 1/4/99
CHECKED BY MAD DATE 1/4/99

CITY PROJECT #567292

COUNTY OF BERNALILLO
ENVIRONMENTAL HEALTH AND
PUBLIC WORKS DEPARTMENTS

BERNALILLO COUNTY STATE OF NEW MEXICO

NORTH VALLEY AREAS B AND F
VACUUM STATION

SITE LAYOUT
GRADING & DRAINAGE PLAN

PROJECT NO. 96034 | SHEET 3 OF 19

WILSON & COMPANY X:\PUBLIC\PROJECTS\96034\DRAWINGS\VACSTA\6034VS03-9-1-99.DWG

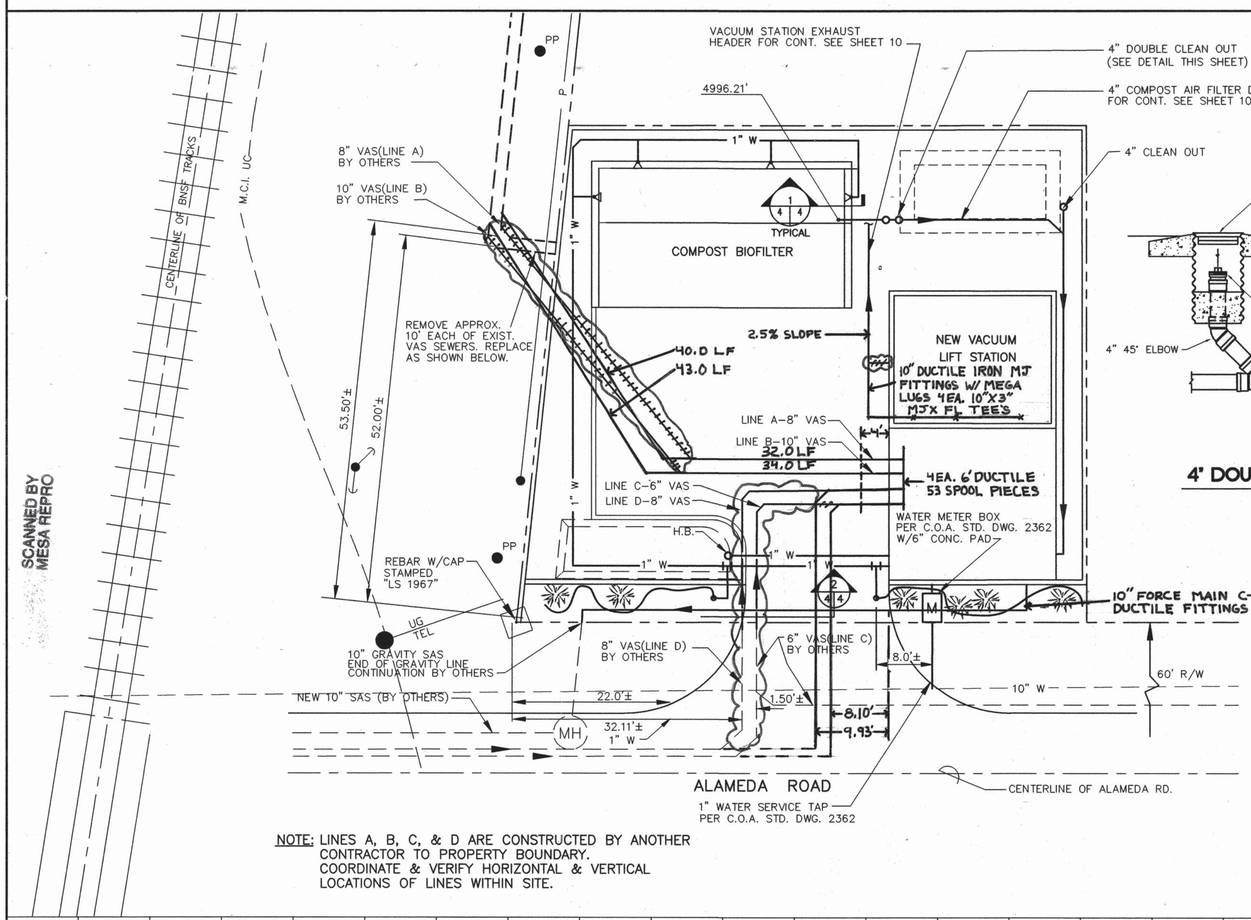

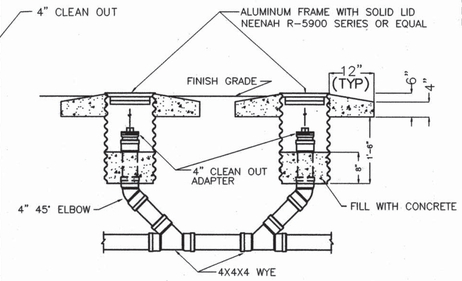

4" DOUBLE CLEANOUT DETAIL

N.T.S.

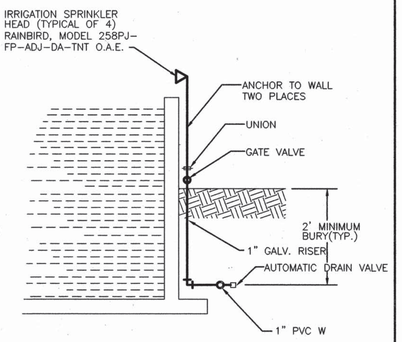

1/4/4 IRRIGATION SPRINKLER

NO SCALE

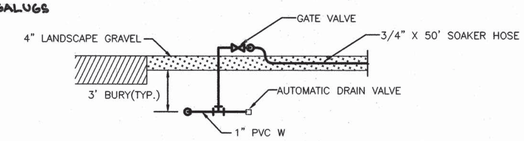

2/4/4 XERISCAPING IRRIGATION DETAIL

NO SCALE

NOTE: TYPICAL BOTH SIDES OF ENTRANCE

NOTE: LINES A, B, C, & D ARE CONSTRUCTED BY ANOTHER CONTRACTOR TO PROPERTY BOUNDARY. COORDINATE & VERIFY HORIZONTAL & VERTICAL LOCATIONS OF LINES WITHIN SITE.

SCALE:
HORIZ: 1" = 10'
VERT: 1" = 2'

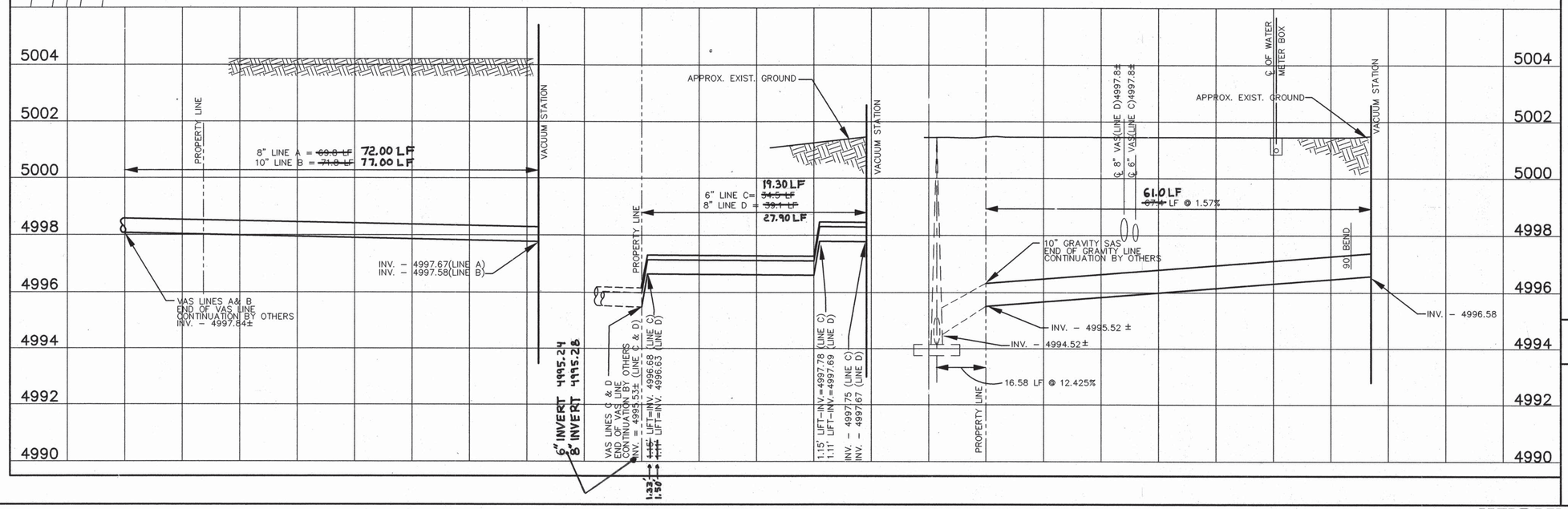

NOTES:

1. ALL UNDERGROUND UTILITIES SHOWN ON THIS PLAN ARE APPROXIMATE LOCATIONS. VERIFY LOCATION OF ALL UNDERGROUND UTILITIES BEFORE COMMENCING WORK.

2. VACUUM STATION & ASSOCIATED PIPING CONNECT TO SEWERS CONSTRUCTED BY OTHERS AND ARE ASSUMED TO BE COMPLETE PRIOR TO CONSTRUCTION OF THIS PROJECT. PROTECT PLUGGED PIPES UNTIL FINAL CONNECTION IS MADE.

3. FOR CONTINUATION OF PIPING INTO PUMP STATION SEE SHT. 10.

AS-BUILT INFORMATION
CONTRACTOR: TRIAD BUILDERS, OF NM DATE 11/99
WORK STAKED BY: TRIAD DATE 3/00
INSPECTOR'S ACCEPTANCE BY: WILSON & CO. DATE
FIELD VERIFICATION BY DATE
DRAWINGS CORRECTED BY: WILSON & CO. DATE 9/00
MICRO-FILM INFORMATION
RECORDED BY DATE
NO.

BENCH MARKS

SURVEY INFORMATION
FIELD NOTES

NO.	BY	DATE

SEAL

ENGINEER'S SEAL

ROBERT J. PAULLETTE NEW MEXICO 12763 REGISTERED PROFESSIONAL ENGINEER

NO.	DATE	REMARKS	BY
2	9/19/00	AS RELOCATIONS	ADR
1	9/3/99	RELOCATION PUMP STATION	RJP

REVISIONS

WILSON & COMPANY, ENGINEERS & ARCHITECTS

		DATE
DESIGNED BY	RJP	1/4/99
DRAWN BY	PRD	1/4/99
CHECKED BY	MAD	1/4/99

CITY PROJECT #567292

COUNTY OF BERNALILLO
ENVIRONMENTAL HEALTH AND PUBLIC WORKS DEPARTMENTS

BERNALILLO COUNTY STATE OF NEW MEXICO

NORTH VALLEY AREAS B AND F VACUUM SEWER IMPROVEMENTS

SITE PIPING PLAN AND SEWER PROFILES

PROJECT NO. 96034

SHEET 4 OF 19

WILSON & COMPANY

X:\PUBLIC\PROJECTS\96034\DRAWINGS\VACSTA\6034VS04-9-1-99.DWG

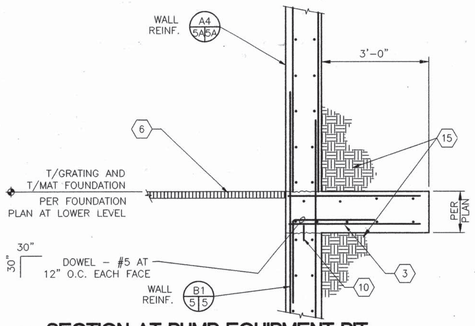

SECTION AT PUMP EQUIPMENT PIT

D1 5 5 SCALE: 1/2" = 1'-0"

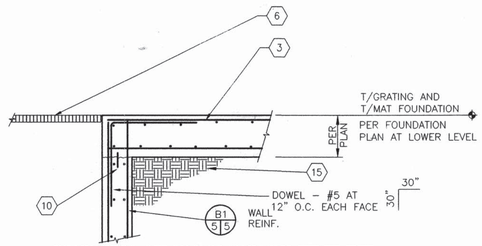

SECTION AT PUMP EQUIPMENT PIT

D2 5 5 SCALE: 1/2" = 1'-0"

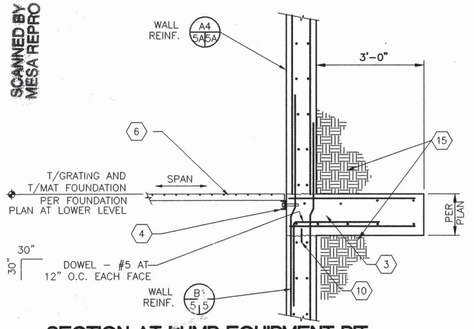

SECTION AT PUMP EQUIPMENT PIT

C1 5 5 SCALE: 1/2" = 1'-0"

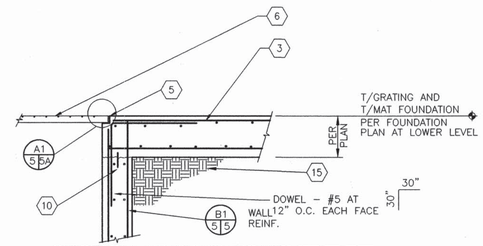

SECTION AT PUMP EQUIPMENT PIT

C2 5 5 SCALE: 1/2" = 1'-0"

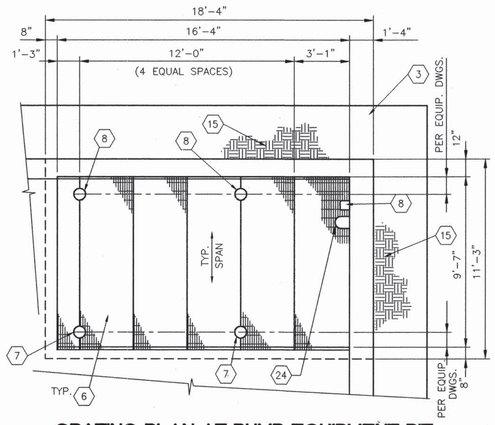

GRATING PLAN AT PUMP EQUIPMENT PIT

B2 5 5 SCALE: 1/4" = 1'-0"

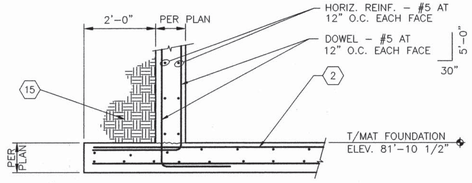

SECTION AT PUMP EQUIPMENT PIT

B1 5 5 SCALE: 1/2" = 1'-0"

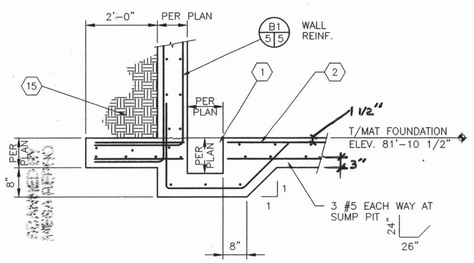

SECTION AT SUMP PIT

A1 5 5 SCALE: 1/2" = 1'-0"

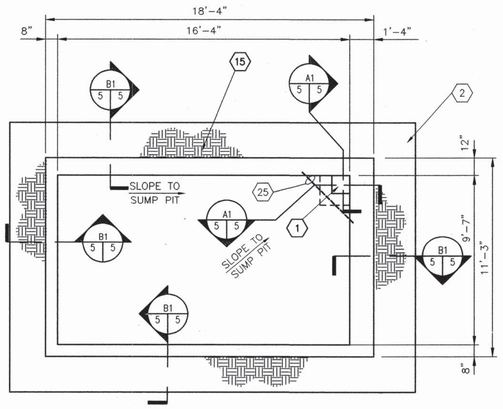

FOUNDATION PLAN AT PUMP EQUIPMENT PIT

A2 5 5 SCALE: 1/4" = 1'-0"

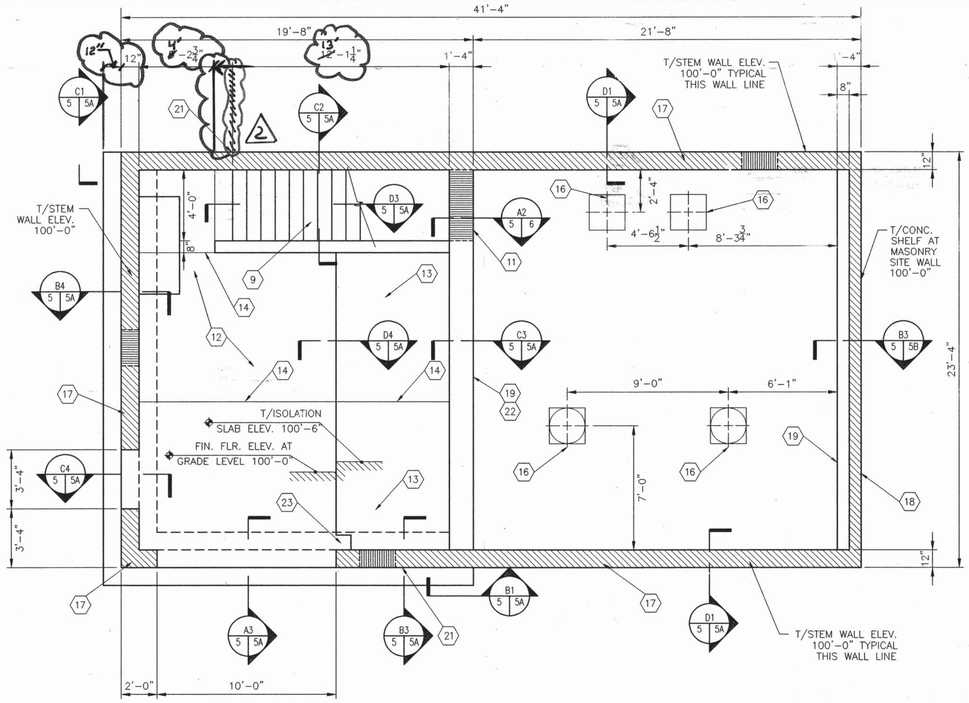

FOUNDATION PLAN AT GRADE LEVEL

SCALE: 1/4" = 1'-0"

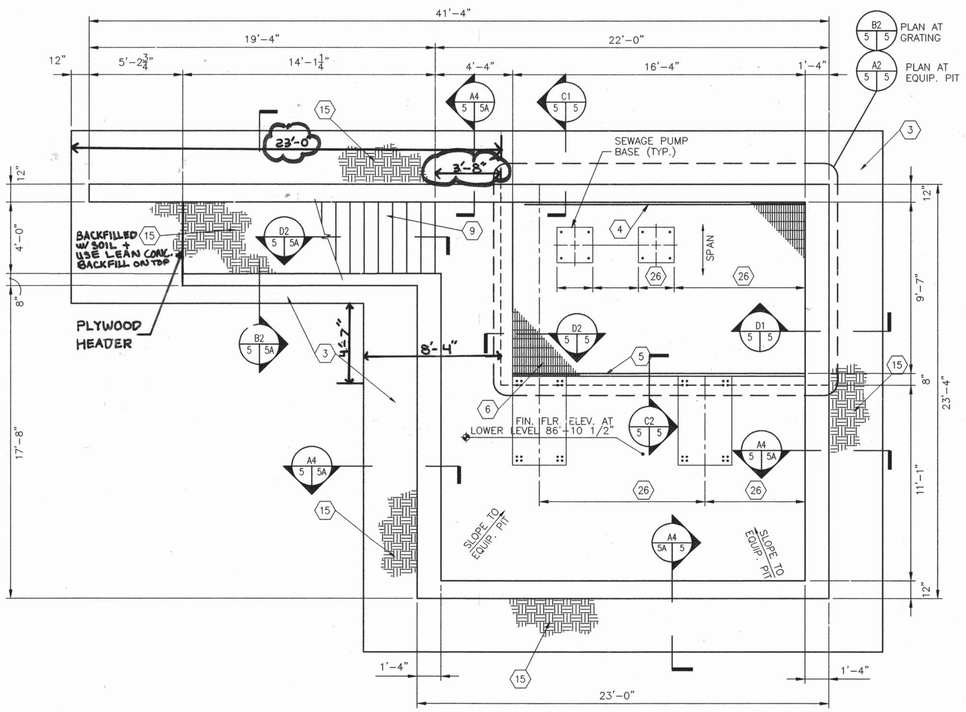

FOUNDATION PLAN AT LOWER LEVEL

SCALE: 1/4" = 1'-0"

GENERAL SHEET NOTES:

A) REFERENCE FINISH FLOOR ELEVATION 100'-0" AND REFERENCES DATUM ELEVATION SHOWN ON SHEET 3
B) FOR STOOPS, BOLLARDS AND HANDRAILS SIZES AND LOCATIONS, SEE ARCHITECTURAL DRAWINGS.
C) BUILDING LOCATION SHALL BE PER SITE PLAN, SEE SHEET 3
D) FOR PIPE SIZES AND LOCATIONS, SEE EQUIPMENT PLAN, SECTION AND DETAIL DRAWING.
E) FOR MECHANICAL WALL PENETRATION LOCATIONS AND SIZES, SEE AND COORDINATE WITH ARCHITECTURAL AND MECHANICAL DRAWINGS AND SEE DETAIL A1/5.
F) EQUIPMENT DIMENSIONS ARE SUBJECT TO MANUFACTURE. VERIFY PRIOR TO INITIATION OF CONSTRUCTION.
G) FOR SHEET WATERPROOFING BELOW GRADE, SEE ARCHITECTURAL DRAWINGS

SHEET KEYED NOTES : (X)

1) SUMP PIT – 12" x 12" x 12" DEEP, CONSTRUCTION PER SECTION
2) CAST-IN-PLACE CONCRETE MAT FOUNDATION 15'-3" WIDE x 22'-4" LONG x 0'-10" THICK W/ #5 AT 18" O.C. EACH WAY IN BOTTOM AND W/ #5 AT 12" O.C. EACH WAY IN TOP
3) CAST-IN-PLACE CONCRETE MAT FOUNDATION SHAPE AS SHOWN x 1'-2" THICK W/ #5 AT 10" O.C. EACH WAY IN BOTTOM AND W/ #5 AT 12" O.C. EACH WAY AT TOP
4) ALUMINUM CHANNEL – C 3 x 2.07 W/ CHEMICAL ANCHORS, STAINLESS STEEL, THREADED ROD – 3/4" DIAMETER W/ 4" EMBEDMENT, AT 3" FROM EACH END AND AT 12" O.C. BETWEEN
5) GALVANIZED STEEL ANGLE
6) GRATING TYPE 1, SPAN AS INDICATED
7) BANDED OPENING AT GRATING EDGE FOR PIPE PENETRATION DOWN TO PIT BELOW, VERIFY SIZE AND LOCATION WITH EQUIPMENT DRAWINGS
8) BANDED OPENING AT GRATING EDGE FOR PIPE PENETRATION UP FROM PIT BELOW, VERIFY SIZE AND LOCATION WITH EQUIPMENT DRAWINGS
9) CAST-IN-PLACE CONCRETE STAIRS – SEE ARCHITECTURAL DRAWINGS FOR RISE AND RUN
10) WATERSTOP
11) CAST-IN-PLACE CONCRETE LINTEL AT STAIRWELL
12) CAST-IN-PLACE CONCRETE SLAB – 5" THICK W/ #4 AT 12" O.C EACH WAY
13) CAST-IN-PLACE CONCRETE CONCRETE ISOLATION SLAB – 11" THICK W/ #5 AT 12" O.C. EACH WAY AT CENTER OF SLAB
14) SAW CUT JOINT – SEE TYPICAL SAW CUT JOINT DETAIL SHEET 2
15) STRUCTURAL BACK FILL
16) EQUIPMENT ACCESS DOORS ABOVE
17) CONCRETE MASONRY UNIT WALL – 12" WIDE
18) CONCRETE MASONRY UNIT WALL – 8" WIDE
19) CONCRETE WALL PER SECTION
20) HORIZ. BOND BEAMS THIS WALL LINE PER HORIZONTAL REINFORCING SECTION C3/5B
21) HORIZ. BOND BEAMS THIS WALL LINE PER HORIZONTAL REINFORCING SECTION C4/5B
22) HORIZ. BOND BEAMS THIS WALL LINE PER HORIZONTAL REINFORCING SECTION C2/5B
23) PROVIDE 8" X 16" BLOCK-OUT IN ISOLATION SLAB AT OVERHEAD JAMB
24) BANDED SLOT AT PIPING ALONG WALL LINE, VERIFY SIZE AND SPACING W/ EQUIPMENT DRAWINGS
25) PROVIDE (1) #5 x 4'-0" DIAG. CORNER BAR AT SUMP PIT
26) LOCATION OF TANKS AND ANCHORING REQUIREMENTS SUBJECT TO EQUIPMENT SUPPLIED. COORDINATE WITH MANUFACTURER PRIOR TO CONSTRUCTION.

CITY PROJECT #567292

NO.	DATE	BY
2	9/29/00	FOUNDATION CORRECTION — JDR
1	9/3/99	REVISED PUMP STA. LAYOUT — RJP

REMARKS — REVISIONS

AS-BUILT INFORMATION
CONTRACTOR: TRIAD BUILDERS OF NM — DATE 4/99
WORK STAKED BY: TRIAD — DATE
INSPECTOR ACCEPTANCE BY: WILSON & Co. — DATE 3/00
FIELD VERIFICATION BY: — DATE
DRAWINGS CORRECTED BY: WILSON & Co. — DATE 9/00
MICRO-FILM INFORMATION — DATE
RECORDED BY — DATE
NO.

BENCH MARKS

SURVEY INFORMATION
FIELD NOTES
NO. | BY | DATE

ENGINEER'S SEAL
ROBERT J. PAULETTE — NEW MEXICO — 12763 — REGISTERED PROFESSIONAL ENGINEER

WILSON & COMPANY, ENGINEERS & ARCHITECTS
DESIGNED BY HMK — DATE 11/20/98
DRAWN BY JT — DATE 11/20/98
CHECKED BY JDC — DATE 11/20/98

COUNTY OF BERNALILLO
ENVIRONMENTAL HEALTH AND
PUBLIC WORKS DEPARTMENTS

BERNALILLO COUNTY — STATE OF NEW MEXICO

NORTH VALLEY AREAS B AND F
VACUUM STATION

STRUCTURAL – FOUNDATION PLANS
BELOW AND AT GRADE LEVEL

PROJECT NO. 96034 | SHEET 5 OF 19

WILSON & COMPANY

X:\PUBLIC\PROJECTS\96034\DRAWINGS\VACSTA\STRUCT\6034VS-SHT5-9-1-99.DWG

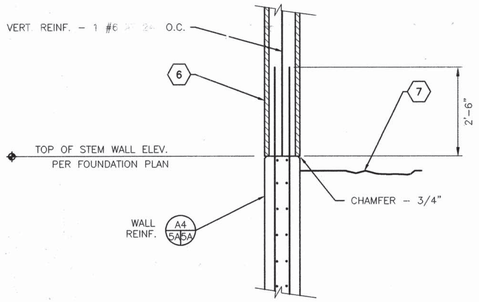

D1 5 5A SECTION AT TOP OF CONCRETE WALL
SCALE: 1/2" = 1'-0"

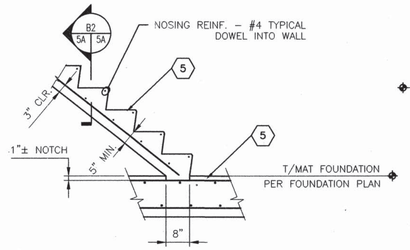

D2 5 5A SECTION AT STAIRS
SCALE: 1/2" = 1'-0"

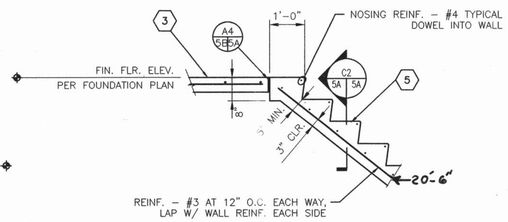

D3 5 5A SECTION AT STAIRS
SCALE: 1/2" = 1'-0"

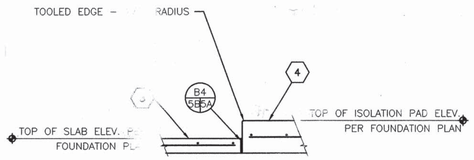

D4 5 5A ISOLATION/FLOOR SLAB INTERFACE
SCALE: 1/2" = 1'-0"

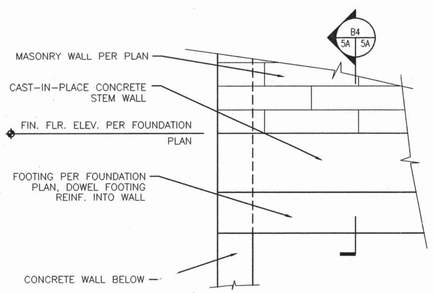

C1 5 5A ELEVATION AT GRADE LEVEL FOOTING
SCALE: 1/2" = 1'-0"

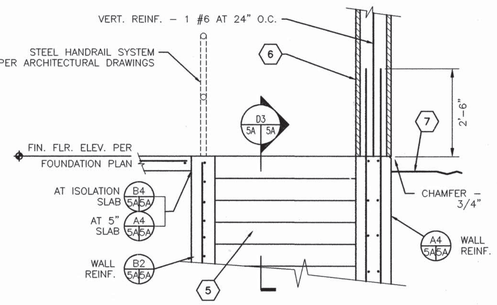

C2 5 5A STAIRWELL SECTION AT GRADE LEVEL
SCALE: 1/2" = 1'-0"

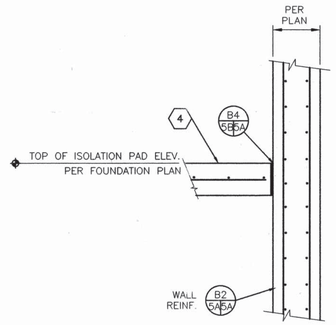

C3 5 5A CONC. WALL AT ISOLATION SLAB SECTION
SCALE: 1/2" = 1'-0"

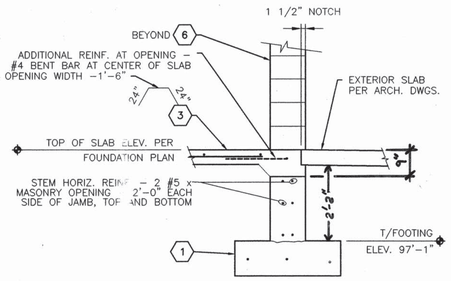

C4 5 5A SECTION AT MASONRY OPENING
SCALE: 1/2" = 1'-0"

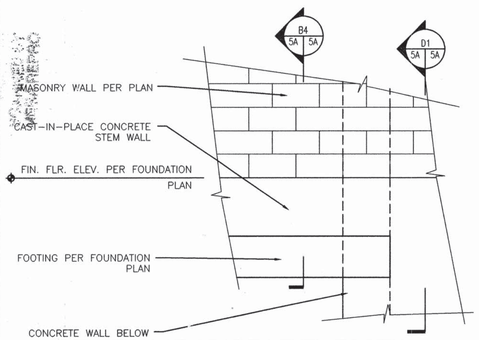

B1 5 5A ELEVATION AT GRADE LEVEL FOOTING
SCALE: 1/2" = 1'-0"

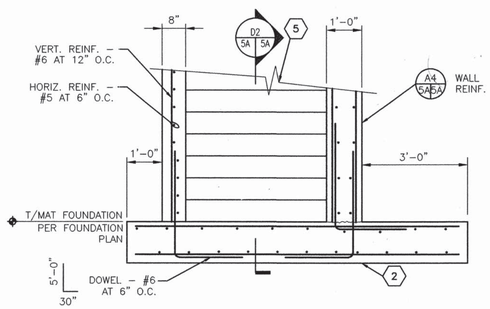

B2 5 5A STAIRWELL SECTION AT LOWER LEVEL
SCALE: 1/2" = 1'-0"

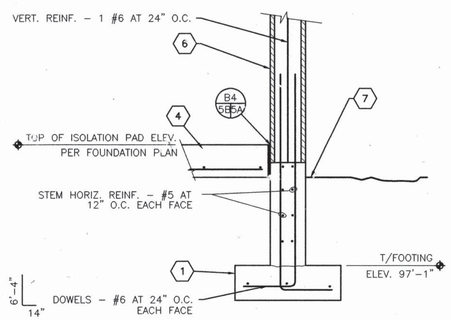

B3 5 5A SECTION AT FOOTING
SCALE: 1/2" = 1'-0"

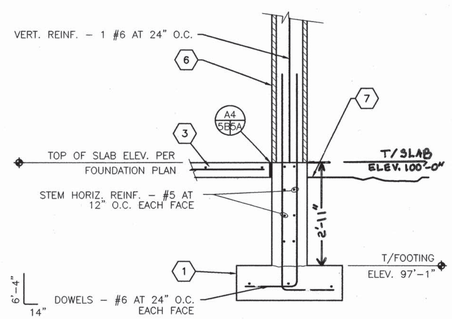

B4 5 5A SECTION AT FOOTING
SCALE: 1/2" = 1'-0"

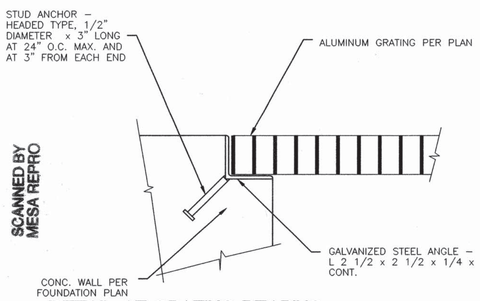

A1 5 5A DETAIL AT GRATING BEARING
SCALE: 3" = 1'-0"

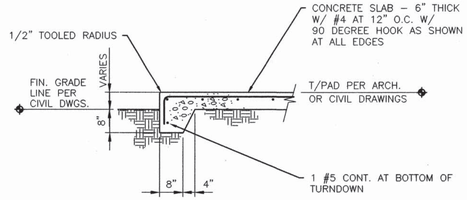

A2 5 5A SECTION AT EXTERIOR SLAB
SCALE: 1/2" = 1'-0"

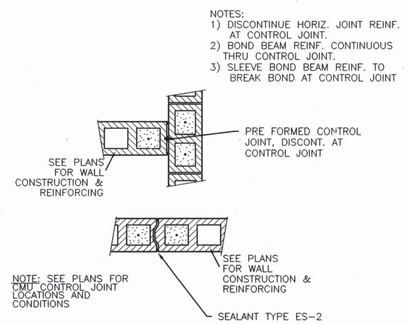

A3 5 5A SECTION AT MASONRY CONTROL JOINT
SCALE: 1/2" = 1'-0"

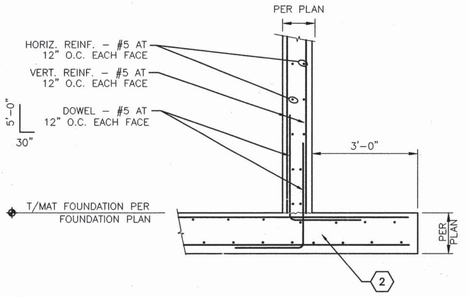

A4 5 5A SECTION AT LOWER LEVEL FOUNDATION
SCALE: 1/2" = 1'-0"

GENERAL SHEET NOTES:

SHEET KEYED NOTES : (X)

1) CONCRETE FOOTING SIZE AND REINFORCEMENT PER FOUNDATION PLAN
2) CAST-IN-PLACE MAT FOUNDATION REINFORCEMENT PER FOUNDATION PLAN
3) CONCRETE FLOOR SLAB PER FOUNDATION PLAN
4) CONCRETE ISOLATION SLAB PER FOUNDATION PLAN
5) CAST-IN-PLACE CONCRETE STAIRS, FOR STAIR RISE, RUN AND NOSING SEE ARCHITECTURAL DRAWINGS
6) CONCRETE MASONRY UNIT WALL – 12" WIDE
7) FINISH GRADE AT EXTERIOR

CITY PROJECT #567292

COUNTY OF BERNALILLO
ENVIRONMENTAL HEALTH AND
PUBLIC WORKS DEPARTMENTS

BERNALILLO COUNTY STATE OF NEW MEXICO

NORTH VALLEY AREAS B AND F
VACUUM STATION

STRUCTURAL DETAILS

PROJECT NO. 96034 | SHEET 5A OF 19

AS-BUILT INFORMATION
CONTRACTOR TRIAD BUILDERS OF NM
WORK STAKED BY TRIAD DATE 11/99
INSPECTOR'S ACCEPTANCE BY WILSON & CO. DATE 3/00
VERIFICATION BY DATE
DRAWINGS CORRECTED BY WILSON & CO. DATE 9/00
MICRO-FILM INFORMATION
RECORDED BY
NO. DATE

BENCH MARKS

SURVEY INFORMATION
FIELD NOTES

NO.	DATE	BY	REMARKS
2	9/28/00	DJM	EDIT
1	9/3/99	RJP	RELOCATION PUMP STATION

REVISIONS

ENGINEER'S SEAL
ROBERT J. PALLETT NEW MEXICO 12793 PROFESSIONAL ENGINEER

WILSON & COMPANY, ENGINEERS & ARCHITECTS
DESIGNED BY HMK DATE 11/20/98
DRAWN BY JR DATE 11/20/98
CHECKED BY JDC DATE 11/20/98

WILSON & COMPANY X:\PUBLIC\PROJECTS\96034\DRAWINGS\VACSTA\STRUCT\6034VS-SHT5A-9-1-99.DWG

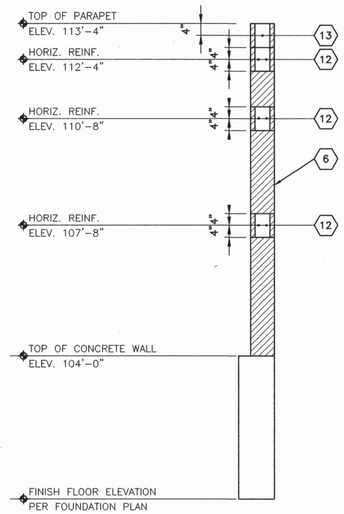

C2 / 5 5B HORIZONTAL BOND BEAM SECTION

SCALE: 1/2" = 1'-0"

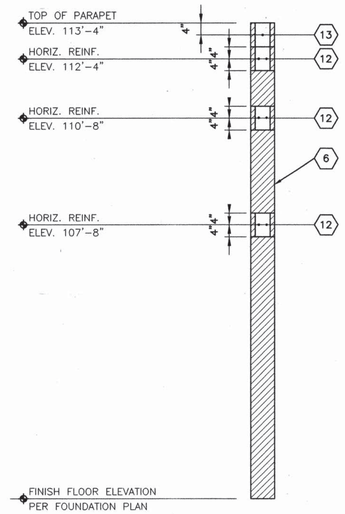

C3 / 5 5B HORIZONTAL BOND BEAM SECTION

SCALE: 1/2" = 1'-0"

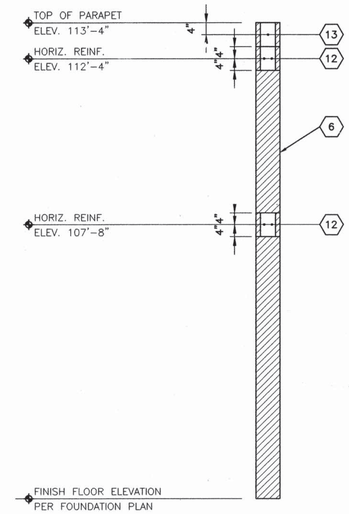

C4 / 5 5B HORIZONTAL BOND BEAM SECTION

SCALE: 1/2" = 1'-0"

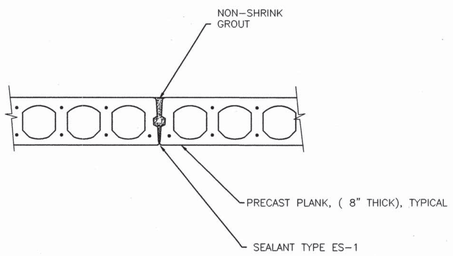

B2 / 6 5B PRECAST PLANK JOINT DETAIL

SCALE: 1/4" = 1'-0"

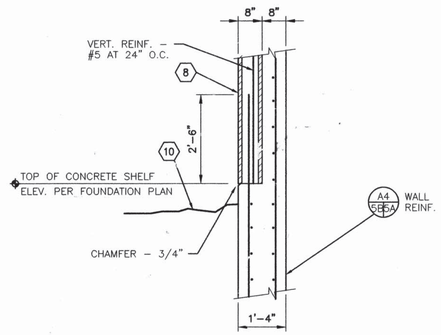

B3 / 5 5B SECTION AT SITE WALL/ BUILDING INTERFACE

SCALE: 1/2" = 1'-0"

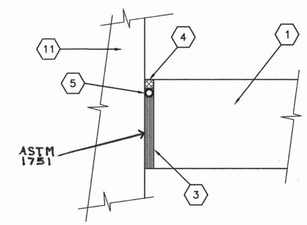

B4 / 5 5B JOINT SEALANT DETAIL

SCALE: 3" = 1'-0"

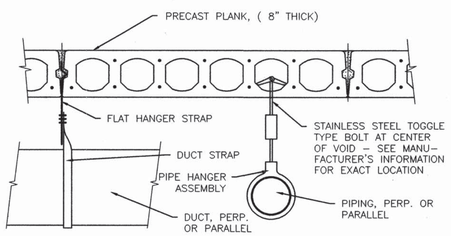

A2 / 6 5B PRECAST PLANK DUCT ANCHORAGE

SCALE: 1/4" = 1'-0"

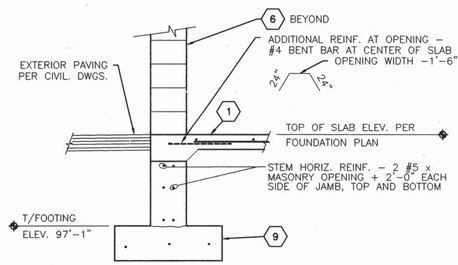

A3 / 5 5B SECTION AT OVERHEAD DOOR SILL

SCALE: 1/2" = 1'-0"

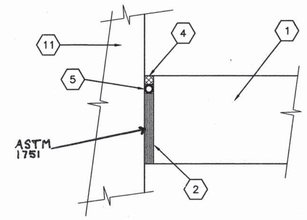

A4 / 5 5B JOINT SEALANT DETAIL

SCALE: 3" = 1'-0"

GENERAL SHEET NOTES:

SHEET KEYED NOTES : (X)

1) CONCRETE SLAB PER FOUNDATION PLAN
2) JOINT FILLER – TYPE 1
3) JOINT FILLER – TYPE 2
4) SEALANT TYPE ES-2
5) JOINT BACKER
6) CONCRETE MASONRY UNIT WALL – 12" WIDE
7) CONCRETE MASONRY UNIT PARAPET WALL – 8" WIDE
8) CONCRETE MASONRY UNIT WALL – 8" WIDE
9) CONCRETE FOOTING SIZE AND REINFORCING PER FOUNDATION PLAN
10) FINISH GRADE LINE
11) CONCRETE MASONRY UNIT WALL OR CONCRETE WALL PER FOUNDATION PLAN
12) BOND BEAM – 8" DEEP W/ 2 #5 CONT. HORIZONTALLY
13) BOND BEAM – 8" DEEP W/ 1 #5 CONT. HORIZONTALLY

AS-BUILT INFORMATION
CONTRACTOR: TRIAD BUILDERS OF NM DATE 11/99
STAKED BY: TRIAD
INSPECTOR'S ACCEPTANCE BY: WILSON & CO. DATE 3/00
FIELD VERIFICATION BY: DATE
FINAL DRAWINGS CORRECTED BY: WILSON & CO. DATE 9/00
MICRO-FILM INFORMATION
RECORDED BY: DATE
NO.

BENCH MARKS

SURVEY INFORMATION
FIELD NOTES
NO. | BY | DATE

ENGINEER'S SEAL

JOSEPH J. PAULETTA
NEW MEXICO
12763
REGISTERED PROFESSIONAL ENGINEER

NO.	DATE	REMARKS	BY
2	9/30/00	ADD TEXT	JDR

REVISIONS

WILSON & COMPANY, ENGINEERS & ARCHITECTS
DESIGNED BY HMK DATE 11/20/98
DRAWN BY JT DATE 11/20/98
CHECKED BY JDC DATE 11/20/98

CITY PROJECT #567292

COUNTY OF BERNALILLO
ENVIRONMENTAL HEALTH AND
PUBLIC WORKS DEPARTMENTS

BERNALILLO COUNTY
STATE OF NEW MEXICO

NORTH VALLEY AREAS B AND F
VACUUM STATION

STRUCTURAL DETAILS

PROJECT NO. 96034

SHEET 5B OF 19

WILSON & COMPANY

X:\PUBLIC\PROJECTS\96034\DRAWINGS\VACSTA\STRUCT\6034VS-SHT5B.DWG

6034vs-SHT5B.dwg 111898 105842

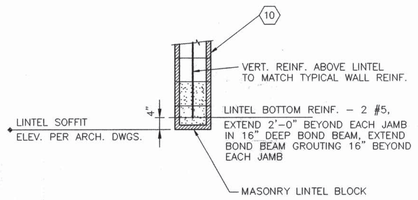

D1/6.6 SECTION AT LINTEL
SCALE: 1/2" = 1'-0"

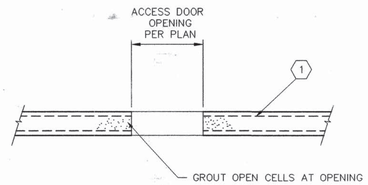

D2/6.6 DETAIL AT PRECAST PLANK OPENING
SCALE: 1/2" = 1'-0"

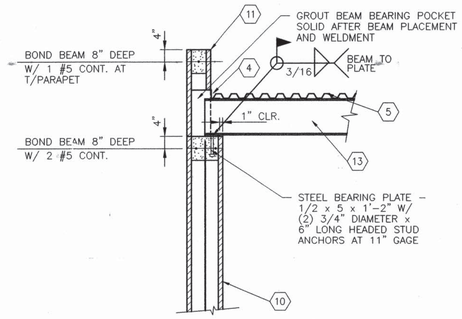

D3/6.6 SECTION AT BEAM BEARING
SCALE: 1/2" = 1'-0"

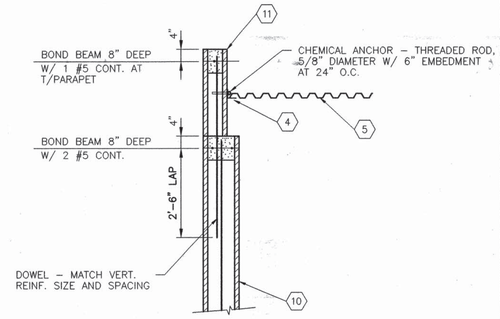

D4/6.6 SECTION AT LEDGER ANGLE
SCALE: 1/2" = 1'-0"

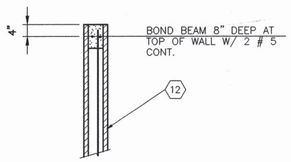

C1/6.6 TOP OF SITE WALL DETAIL
SCALE: 1/2" = 1'-0"

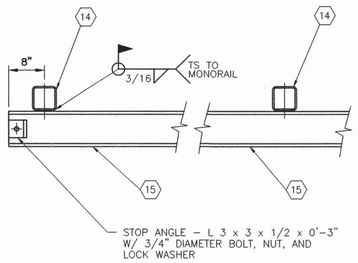

C2/6.6 SECTION AT MONORAIL BEAM
SCALE: 1" = 1'-0"

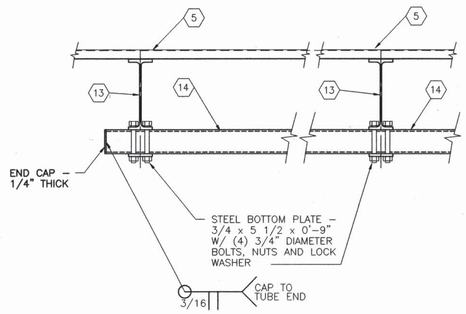

C3/6.6 SECTION AT ROOF/INTERMEDIATE BEAMS
SCALE: 1" = 1'-0"

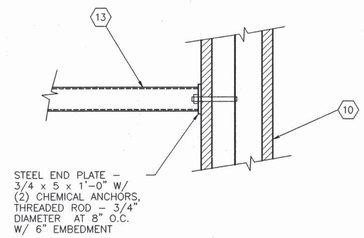

C4/6.6 SECTION AT INTERMEDIATE BEAM END CONN.
SCALE: 1" = 1'-0"

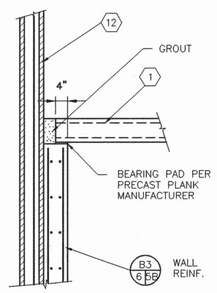

B1/6.6 PRECAST PLANK BEARING DETAIL
SCALE: 1/2" = 1'-0"

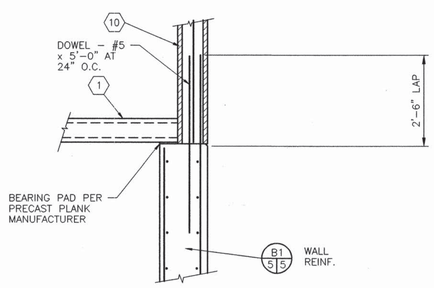

B2/6.6 PRECAST PLANK BEARING DETAIL
SCALE: 1/2" = 1'-0"

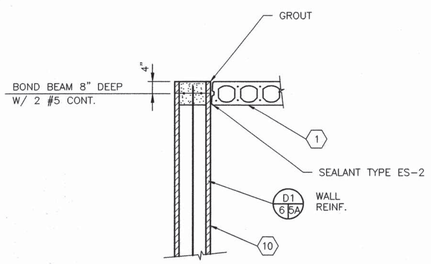

A1/6.6 PRECAST PLANK SIDE CONDITION
SCALE: 1/2" = 1'-0"

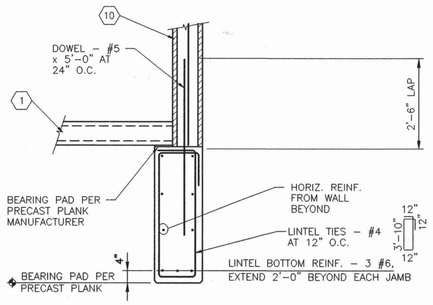

A2/5.6 SECTION AT STAIRWELL LINTEL
SCALE: 1/2" = 1'-0"

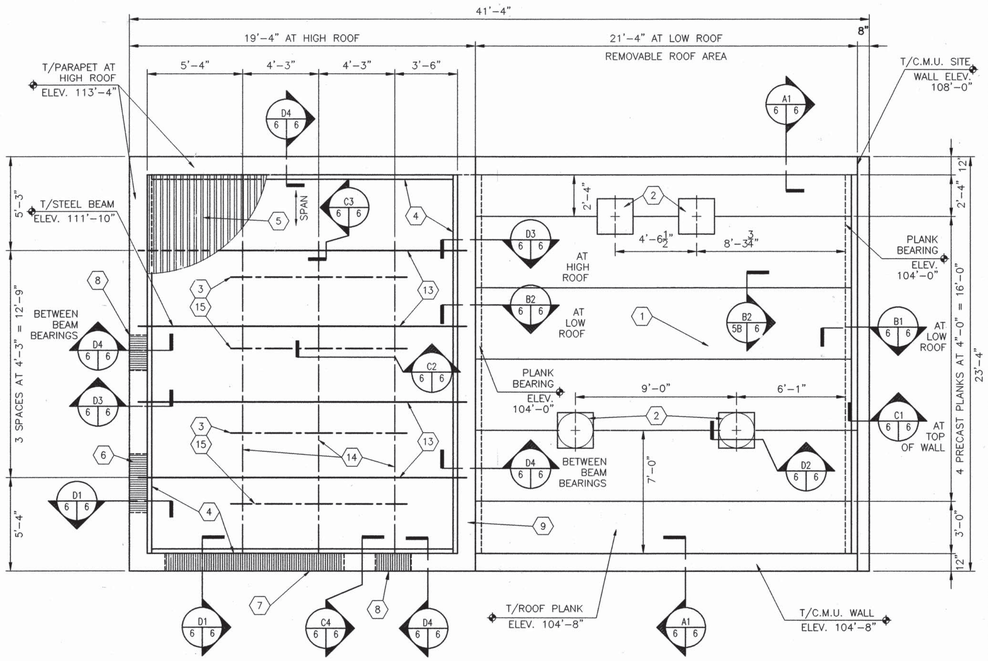

ROOF FRAMING PLAN AT LOW AND HIGH ROOFS
SCALE: 1/4" = 1'-0"

GENERAL SHEET NOTES:

A) REFERENCE FINISH FLOOR ELEVATION = 100'-0" AND REFERENCES DATUM ELEVATION SHOWN ON SHEET 3
B) ANCHORAGE OF DUCT WORK AND PIPING TO PRECAST PLANKS SHALL BE PER DETAIL A2 ON SHEET 5B
C) SEE ARCHITECTURAL ROOF PLAN FOR SCUPPER LOCATIONS AND DETAILS AT SCUPPERS

SHEET KEYED NOTES : (X)

1) PRECAST PLANK – 8" THICK
2) CUTOUTS AT ACCESS DOORS – 2'-0" x 2'-0" CENTERED ON PLANK EDGE AS SHOWN
3) CENTERLINE MONORAIL BEAMS OVER PUMPS, VERIFY LOCATION W/ EQUIPMENT DRAWINGS
4) LEDGER ANGLE – L 3 x 3 x 5/16 x CONT.
5) ROOF DECK – SPAN AS INDICATED ON PLAN
6) CONCRETE MASONRY LINTEL BELOW, 12" WIDE AT MANDOOR
7) CONCRETE MASONRY LINTEL BELOW, 12" WIDE AT OVERHEAD DOOR
8) CONCRETE MASONRY LINTEL BELOW, 12" WIDE AT MECHANICAL PENETRATION, SEE ARCHITECTURAL DRAWINGS FOR LOCATION
9) HORIZ. BOND BEAMS THIS WALL LINE PER HORIZONTAL BOND BEAM SECTION C2/5B
10) CONCRETE MASONRY UNIT WALL – 12" WIDE
11) CONCRETE MASONRY UNIT PARAPET – 8" WIDE
12) CONCRETE MASONRY UNIT SITE WALL – 8" WIDE W/ VERT. REINF. –1 # 5 AT 24" O.C.
13) STEEL ROOF BEAM – W 12 x 14
14) STEEL MONORAIL INTERMEDIATE SUPPORT BEAM – TS 4 x 4 x 1/4
15) STEEL MONORAIL BEAM – S6 x 12.5

AS-BUILT INFORMATION
CONTRACTOR: TRIAD BUILDERS OF NM
DATE: 11/99
SURVEY BY: TRIAD
DATE: 2/00
INSPECTOR'S ACCEPTANCE BY: WILSON & CO.
DATE:
FIELD DRAWINGS CORRECTED BY: WILSON & CO.
DATE: 9/00
MICRO-FILM INFORMATION
RECORDED BY:
DATE:
NO.

BENCH MARKS

SURVEY INFORMATION
FIELD NOTES
NO. | BY | DATE

ENGINEER'S SEAL
ROBERT J. PAULETTE, NEW MEXICO, 12783, PROFESSIONAL ENGINEER
9-3-99

CITY PROJECT #567292

NO.	DATE	REVISIONS	BY
1	9/3/99	RELOCATION PUMP STATION	RJP

REMARKS

WILSON & COMPANY, ENGINEERS & ARCHITECTS
DESIGNED BY HMK DATE 11/20/98
DRAWN BY DATE 11/20/98
CHECKED BY JDC DATE 11/20/98

COUNTY OF BERNALILLO
ENVIRONMENTAL HEALTH AND
PUBLIC WORKS DEPARTMENTS

BERNALILLO COUNTY STATE OF NEW MEXICO

NORTH VALLEY AREAS B AND F
VACUUM STATION

STRUCTURAL – ROOF FRAMING PLANS AT LOW AND HIGH ROOFS

PROJECT NO. 96034

SHEET 6 OF 19

WILSON & COMPANY

X:\PUBLIC\PROJECTS\96034\DRAWINGS\VACSTA\STRUCT\6034VS-SHT69-1-99.DWG

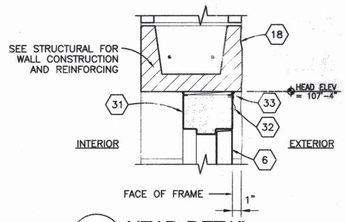

1 / 7 7 HEAD DETAIL
1 1/2"=1'-0"

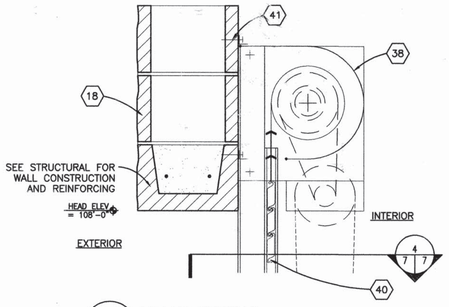

2 / 7 7 HEAD DETAIL
1 1/2"=1'-0"

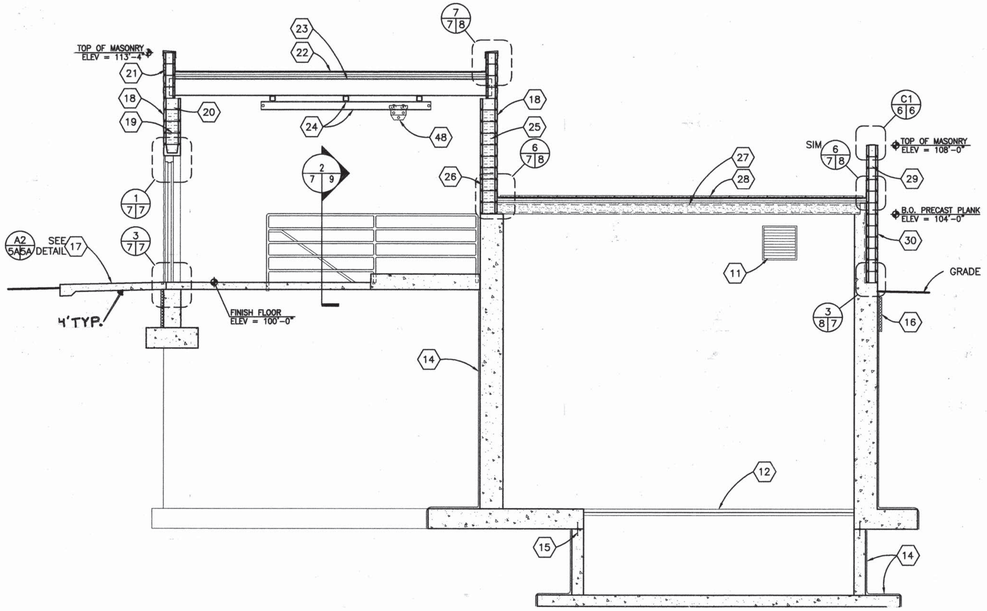

5 / 7 7 BUILDING SECTION
1/4"=1'-0"

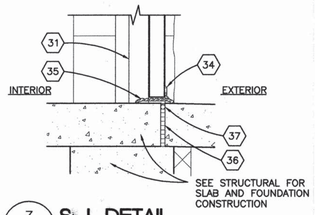

3 / 7 7 SILL DETAIL
1 1/2"=1'-0"

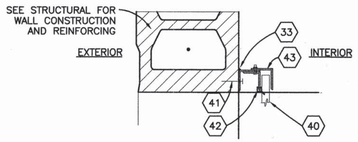

4 / 7 7 JAMB DETAIL
1 1/2"=1'-0"

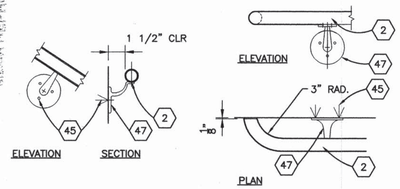

6 / 7 7 HANDRAIL CONNECTION DETAILS
1 1/2"=1'-0"

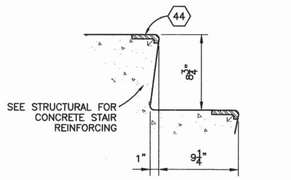

NOTE: LOCATE NOSING ON CENTERLINE OF TREAD AND TERMINATE 6" FROM ENDS

7 / 7 7 STAIR RISER DETAIL
1 1/2"=1'-0"

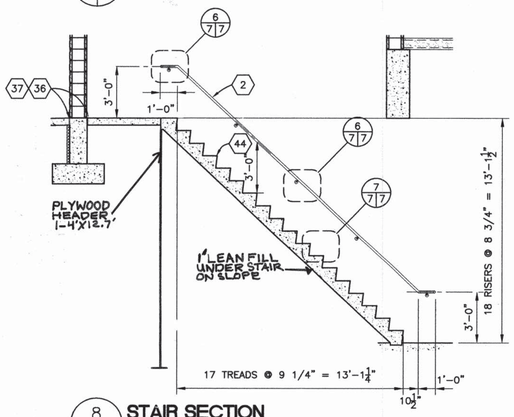

8 / 7 7 STAIR SECTION
1/4"=1'-0"

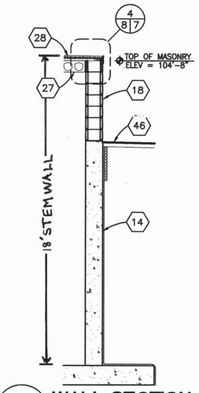

9 / 7 7 WALL SECTION
1/4"=1'-0"

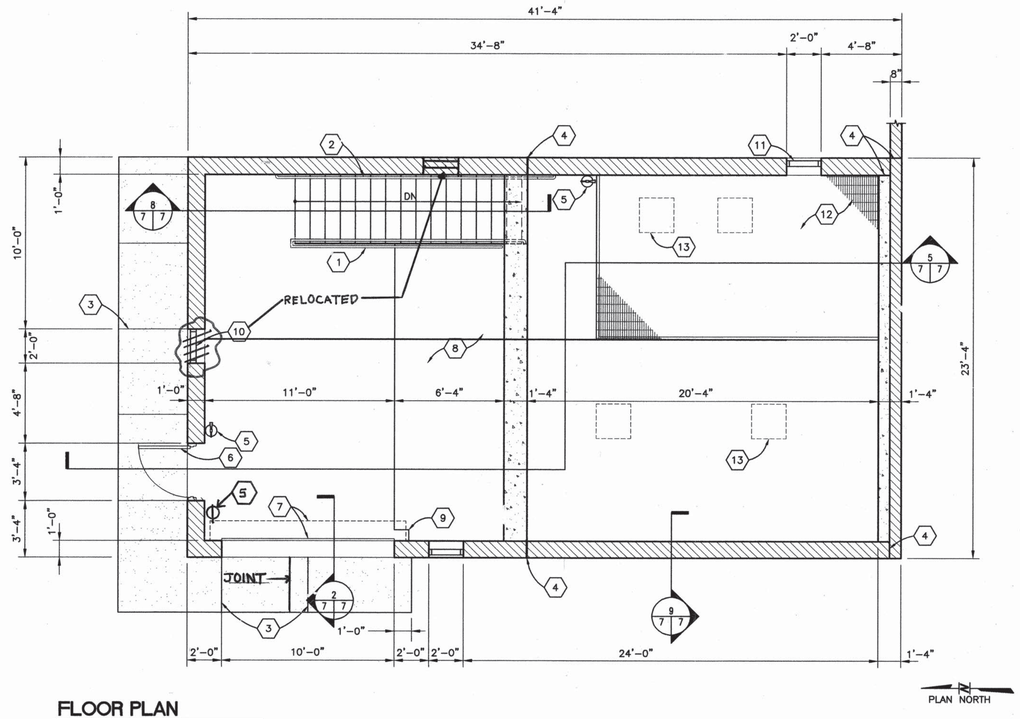

FLOOR PLAN
1/4"=1'-0"

GENERAL SHEET NOTES:

A) REFERENCE FINISH FLOOR ELEVATION = 100'-0" AND REFERENCES DATUM ELEVATION, SEE CIVIL DRAWINGS FOR DATUM.

SHEET KEYED NOTES : (X)

1. STEEL RAILING SYSTEM
2. RAILING
3. SAW CUT ~~JOINT~~ TOOL JOINT
4. MASONRY CONTROL JOINT
5. SURFACE MOUNTED FIRE EXTINGUISHER
6. STEEL DOOR – USE HARDWARE SET HW–1
7. EXTERIOR OVERHEAD COILING DOOR
8. RAISED EQUIPMENT SLAB– SEE STRUCTURAL
9. PROVIDE NOTCH IN RAISED SLAB FOR EXTERIOR COILING DOOR– SEE STRUCTURAL
10. EXHAUST FAN– SEE MECHANICAL
11. AIR INTAKE COVER– SEE MECHANICAL
12. GRATING– SEE STRUCTURAL
13. DASHED LINES INDICATE ROOF HATCH ABOVE
14. SHEET WATERPROOFING
15. WATERSTOP– SEE STRUCTURAL
16. PERIMETER INSULATION (2" THICK)
17. CONCRETE PAVING
18. ~~TYPE A~~ CONCRETE MASONRY UNITS (12" DEEP)
19. HORIZONTAL JOINT REINFORCING (16" OC)
20. BOND BEAM
21. ~~TYPE B~~ CONCRETE MASONRY UNITS (8" DEEP)
22. ELASTOMERIC MEMBRANE ROOFING OVER COVER BOARD OVER TAPERED BOARD INSULATION
23. STEEL BEAM– SEE STRUCTURAL
24. STEEL FRAMING FOR MONORAIL– SEE STRUCTURAL
25. LOOSE FILL INSULATION
26. ~~TYPE D~~ CONCRETE MASONRY UNITS
27. PRECAST PLANK
28. PAVERS OVER ELASTOMERIC MEMBRANE ROOFING OVER COVER BOARD OVER TAPERED BOARD INSULATION
29. ~~TYPE D~~ CONCRETE MASONRY UNITS (2 SIDES)
30. ~~TYPE D~~ CONCRETE MASONRY UNITS (1 SIDE)
31. STEEL FRAME– GROUT SOLID
32. DRIP WEATHERSTRIP
33. SEALANT TYPE ES–1
34. SWEEP
35. THRESHOLD
36. JOINT FILLER
37. BACKER ROD AND SEALANT TYPE ES–2
38. HOOD ENCLOSURE
39. NOT USED
40. EXTERIOR OVERHEAD COILING DOOR
41. ANCHOR
42. WEATHERSTRIPPING
43. GUIDES
44. NOSING
45. EXPANSION ANCHOR (3/8" X 4")
46. ~~GRAVINGVG~~ CONCRETE PAVING
47. WALL BRACKET
48. HOIST TROLLEY COFFING ET–20–A OR EQUAL (TYP. 4)
49. 1T MANUAL CHAIN HOIST (TYP.1) COFFING MODEL CB–1 OR EQUAL

CITY PROJECT #567292

AS-BUILT INFORMATION
CONTRACTOR: TRIAD BUILDERS OF NM
WORK PERFORMED BY: TRIAD DATE 11/99
INSPECTOR'S ACCEPTANCE BY: WILSON & CO. DATE 3/00
FIELD VERIFICATION BY: DATE
DRAWINGS CORRECTED BY: WILSON & CO. DATE 9/00
MICRO-FILM INFORMATION
RECORDED BY: DATE
NO.

BENCH MARKS

SURVEY INFORMATION
FIELD NOTES
NO. | BY | DATE

ENGINEER'S SEAL
JOSEPH T. PAULETTE
NEW MEXICO
2283

NO.	DATE	REMARKS	BY
2	9/30/00	INSERT SYMBOLS	JDC

REVISIONS

WILSON & COMPANY, ENGINEERS & ARCHITECTS
DESIGNED BY HMK DATE 11/20/98
DRAWN BY JT DATE 11/20/98
CHECKED BY JDC DATE 11/20/98

COUNTY OF BERNALILLO
ENVIRONMENTAL HEALTH AND
PUBLIC WORKS DEPARTMENTS

BERNALILLO COUNTY STATE OF NEW MEXICO

NORTH VALLEY AREAS B AND F
VACUUM STATION

ARCHITECTURAL–
FLOOR PLAN AND DETAILS

PROJECT NO. 96034 | SHEET 7 OF 19

WILSON & COMPANY

X:\PUBLIC\PROJECTS\96034\DRAWINGS\VACSTA\ARCH\A6034VS07-9-1-99.DWG

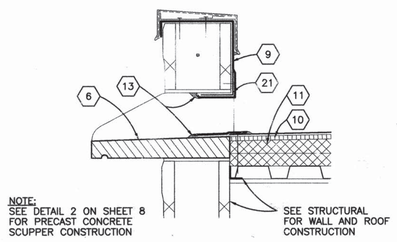

1/8|8 **SECTION AT SCUPPER**
1 1/2"=1'-0"

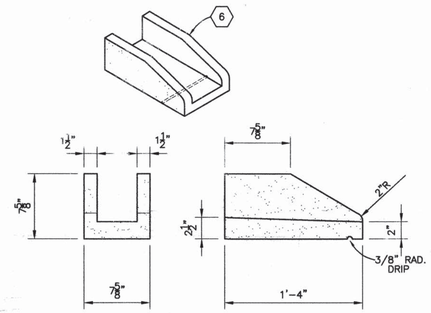

2/8|8 **SCUPPER DETAIL**
1 1/2"=1'-0"

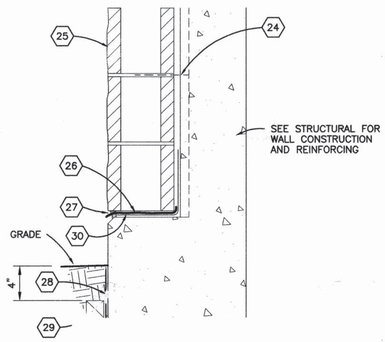

3/7|8 **SECTION**
1 1/2"=1'-0"

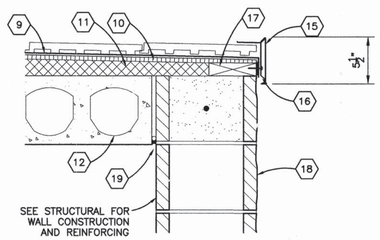

4/8|8 **SECTION**
1 1/2"=1'-0"

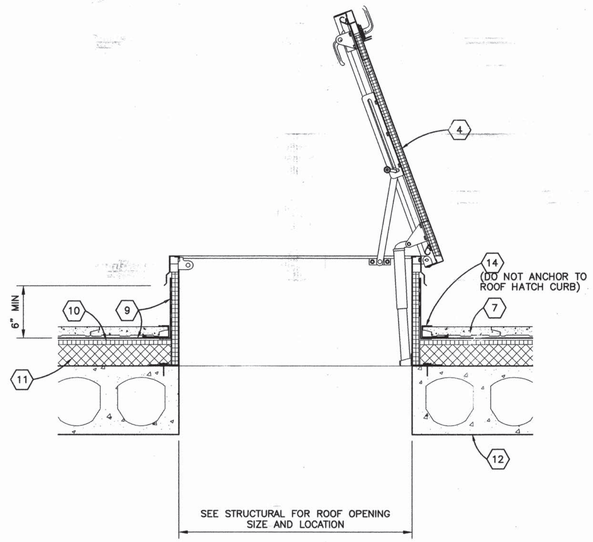

5/8|8 **ROOF HATCH DETAIL**
1 1/2"=1'-0"

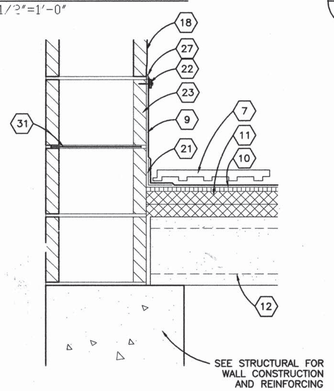

6/7|8 **SECTION**
1 1/2"=1'-0"

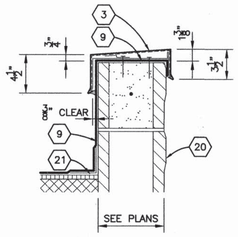

7/8|8 **SECTION**
1 1/2"=1'-0"

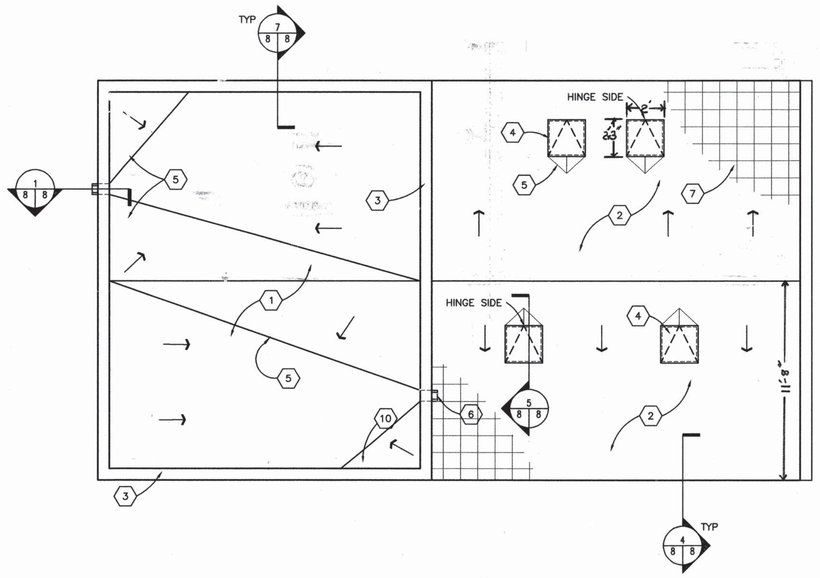

ROOF PLAN
1/4"=1'-0"

PLAN NORTH

GENERAL SHEET NOTES:

A) REFERENCE FINISH FLOOR ELEVATION = 100'-0" AND REFERENCES DATUM ELEVATION, SEE CIVIL DRAWINGS FOR DATUM.
B) SOLID GROUT ALL CMU CELLS WITH REINFORCING-- SEE STRUCTURAL

SHEET KEYED NOTES : (X)

1. ELASTOMERIC MEMBRANE ROOFING OVER COVER BOARD OVER TAPERED BOARD INSULATION
2. PAVERS OVER ELASTOMERIC MEMBRANE ROOFING OVER COVER BOARD OVER TAPERED BOARD INSULATION
3. COPING
4. ROOF HATCH
5. CRICKET
6. PRECAST CONCRETE SCUPPER
7. PAVERS
8. NOT USED
9. ELASTOMERIC MEMBRANE ROOFING
10. COVER BOARD
11. TAPERED BOARD INSULATION
12. PRECAST PLANK
13. SEAM CAULK
14. ROOF PAVER TERMINATION
15. FACIA
16. FACIA ANCHOR BAR
17. PRESSURE TREATED DIMENSION LUMBER (2x6)
18. ~~TYPE "A"~~ CONCRETE MASONRY UNITS (12" DEEP)
19. BACKER ROD AND SEALANT TYPE ES-1
20. ~~TYPE "B"~~ CONCRETE MASONRY UNITS (8" DEEP)
21. FLEXIBLE FLASHING
22. TERMINATION BAR
23. ~~TYPE "C"~~ CONCRETE MASONRY UNITS
24. WALL TIES
25. ~~TYPE "D"~~ CONCRETE MASONRY UNITS (1 SIDE)
26. CAVITY DRAINAGE MATERIAL
27. SEALANT TYPE ES-1
28. SHEET WATERPROOFING
29. PERIMETER INSULATION (2" THICK)
30. FLASHING
31. HORIZONTAL JOINT REINFORCING (16"OC)

CITY PROJECT #567292

AS-BUILT INFORMATION
CONTRACTOR TRIAD BUILDERS OF NM DATE 11/99
STAKED BY TRIAD DATE
INSPECTOR'S VERIFICATION BY WILSON & CO. DATE 3/00
FIELD VERIFICATION BY DATE
DRAWINGS CORRECTED BY WILSON & CO. DATE 9/00
MICRO FILM INFORMATION
F/ ORDER BY DATE
NO.

BENCH MARKS

SURVEY INFORMATION
FIELD NOTES

NO.	BY	DATE

ENGINEER'S SEAL

NO.	DATE	REMARKS	BY
3	1/2004	DIM EDIT	JDC

REVISIONS

WILSON & COMPANY, ENGINEERS & ARCHITECTS
DESIGNED BY HMK DATE 11/20/98
DRAWN BY JT DATE 11/20/98
CHECKED BY JDC DATE 11/20/98

COUNTY OF BERNALILLO
ENVIRONMENTAL HEALTH AND
PUBLIC WORKS DEPARTMENTS

BERNALILLO COUNTY STATE OF NEW MEXICO

NORTH VALLEY AREAS B AND F VACUUM STATION

ARCHITECTURAL–
ROOF PLAN AND DETAILS

PROJECT NO. 96034 | SHEET 8 OF 19

WILSON & COMPANY

X:\PUBLIC\PROJECTS\96034\DRAWINGS\VACSTA\ARCH\A6034VS07-9-1-99.DWG

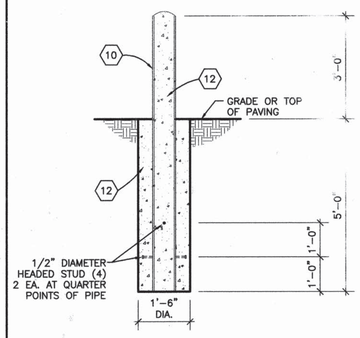

1/9 **BOLLARD DETAIL**
1/2"=1'-0"

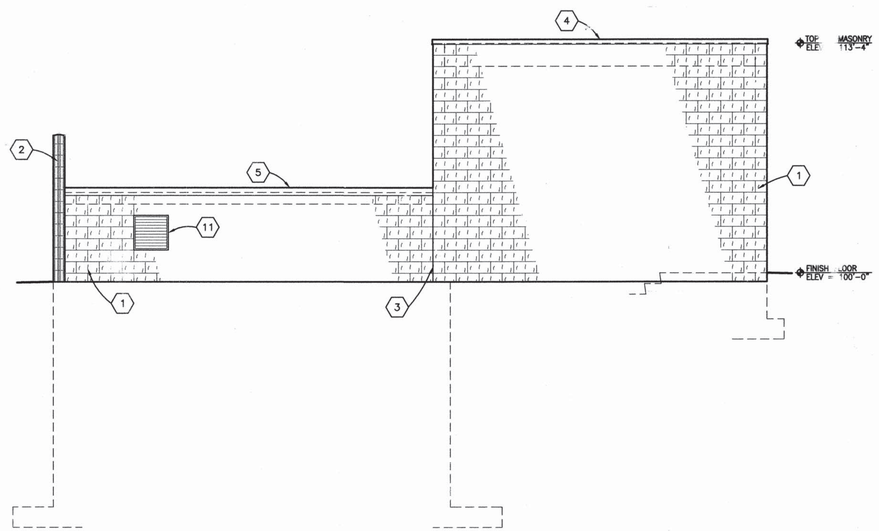

EAST ELEVATION
1/4"=1'-0"

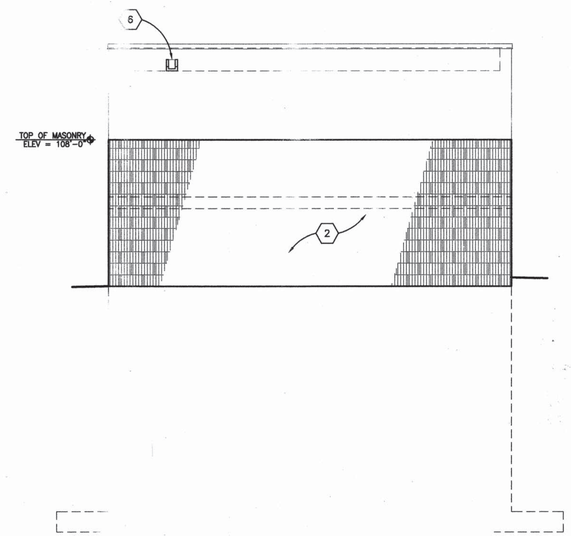

SOUTH ELEVATION
1/4"=1'-0"

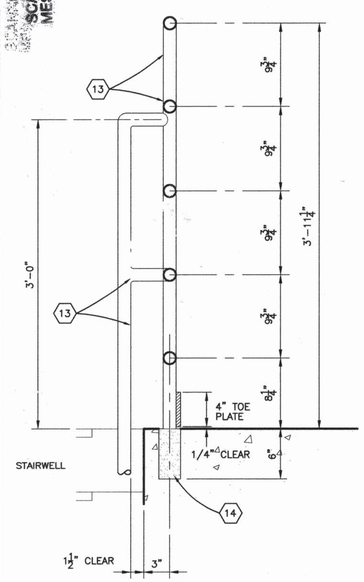

2/9 **RAILING DETAIL**
1 1/2"=1'-0"

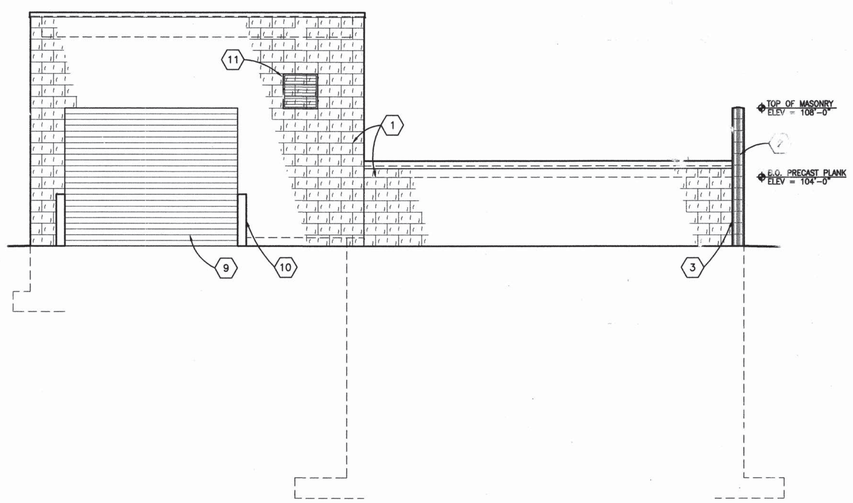

WEST ELEVATION
1/4"=1'-0"

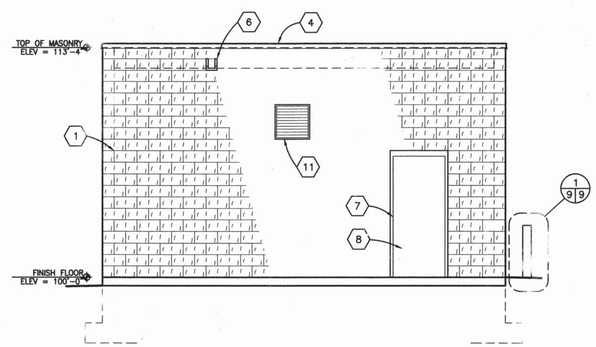

NORTH ELEVATION
1/4"=1'-0"

GENERAL SHEET NOTES:

A. REFERENCE FINISH FLOOR ELEVATION = 100'-0" AND REFERENCES DATUM ELEVATION, SEE CIVIL DRAWINGS FOR DATUM.

SHEET KEYED NOTES : (X)

1. ~~TYPE "A"~~ CONCRETE MASONRY UNITS
2. ~~TYPE "B"~~ CONCRETE MASONRY UNITS
3. MASONRY CONTROL JOINT
4. COPING
5. FACIA
6. PRECAST CONCRETE SCUPPER
7. STEEL FRAME
8. STEEL DOOR
9. OVERHEAD COILING DOOR
10. SCHEDULE 20 GALVANIZED STEEL 6" BOLLARD
11. WALL LOUVER
12. CONCRETE
13. STEEL RAILING SYSTEM
14. GROUT POCKET

CITY PROJECT #567292

COUNTY OF BERNALILLO
ENVIRONMENTAL HEALTH AND
PUBLIC WORKS DEPARTMENTS

BERNALILLO COUNTY · STATE OF NEW MEXICO

NORTH VALLEY AREAS B AND F VACUUM STATION

ARCHITECTURAL–
ELEVATIONS AND DETAILS

PROJECT NO. 96034 | SHEET 9 OF 19

AS-BUILT INFORMATION
CONTRACTOR TRIAD BUILDERS OF NM
DATE 11/99
STAKED BY TRIAD
DATE 2/00
INSPECTOR'S ACCEPTANCE BY WILSON & CO.
DATE
FIELD VERIFICATION BY
DATE
DRAWINGS CORRECTED BY WILSON & CO.
DATE 9/00
MICRO-FILM INFORMATION
RECORDED BY
DATE
NO.

BENCH MARKS

SURVEY INFORMATION
FIELD NOTES
NO. | BY | DATE

ENGINEER'S SEAL
ROBERT J. PAULEY III · NEW MEXICO · 2763 · 9-23-99

NO.	DATE	REMARKS	BY
2	11/20/00	TEXT EDIT	JDC

REVISIONS

WILSON & COMPANY, ENGINEERS & ARCHITECTS
DESIGNED BY HMK DATE 11/20/98
DRAWN BY JT DATE 11/20/98
CHECKED BY JDC DATE 11/20/98

WILSON & COMPANY

X:\PUBLIC\PROJECTS\96034\DRAWINGS\VACSTA\ARCH\A6034VS07-9-1-99.DWG

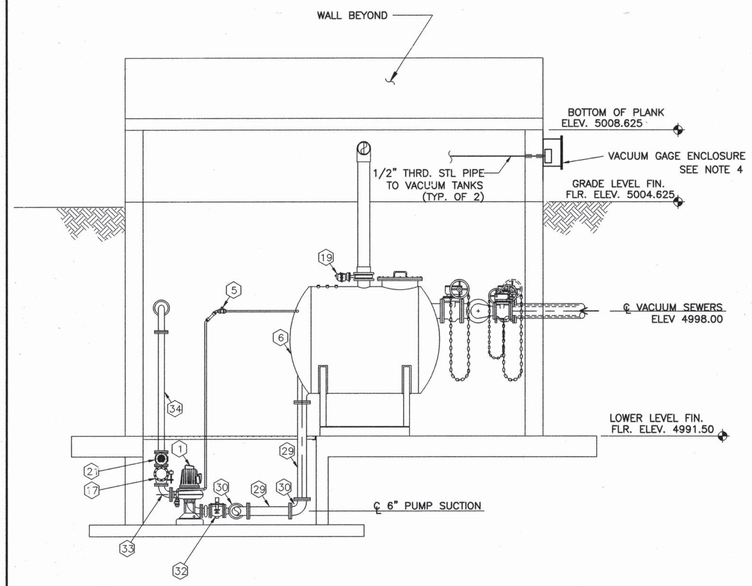

A/10 **BUILDING SECTION AT LOWER LEVEL LOOKING SOUTH**
SCALE: 1/4" = 1'-0"

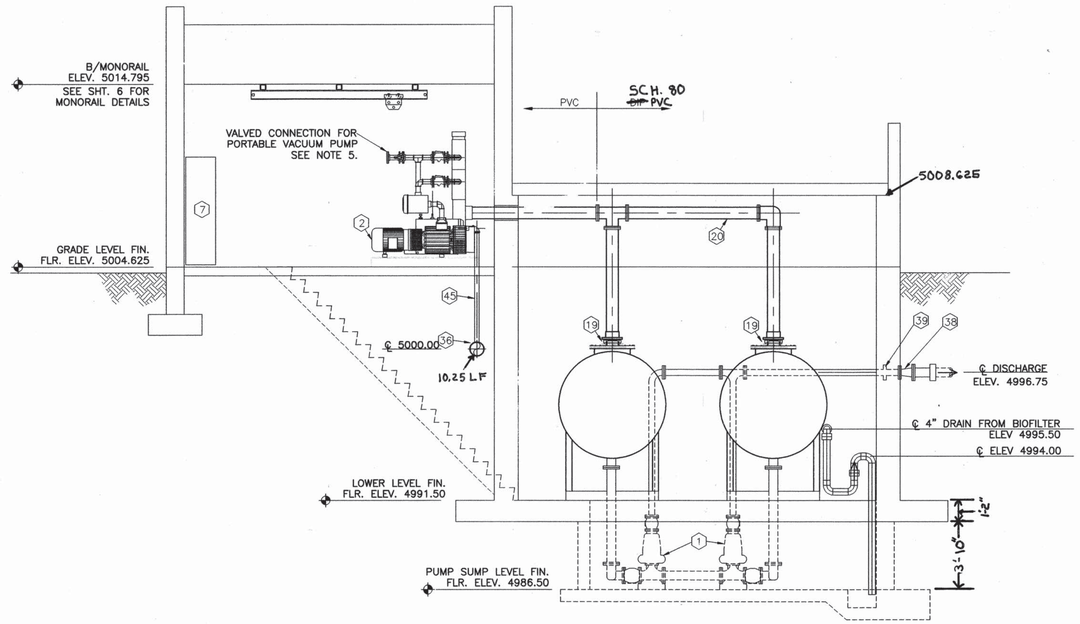

B/10 **BUILDING SECTION LOOKING EAST**
SCALE: 1/4" = 1'-0"

SHEET KEYED NOTES : (X)

#	DESCRIPTION	QTY	MANUF./ MATERIAL
1	CENTRIFUGAL SEWAGE PUMP	2	AIRVAC
2	VACUUM PUMP, 430 CFM	4	AIRVAC
3	0–30" HG. VACUUM GAUGE	2	AIRVAC
4	LEVEL SENSING PROBES	14	AIRVAC
5	1" EQUALIZING LINE ASSEMBLY	2	AIRVAC
6	1500 GALLON STEEL COLLECTION TANK	2	AIRVAC
7	MOTOP CONTROL CENTER	1	AIRVAC
8	0–30" HG. VACUUM SWITCH	4	AIRVAC
9	1" CLEAR SITE TUBE ASSEMBLY	2	AIRVAC
10	8" PLUG VALVE–VACUUM MAINS	2	AIRVAC
11	1" PVC PLUG VALVE	2	AIRVAC
12	~~3" PVC BALL VALVE~~ NOT USED	1	AIRVAC
13	6" PLUG VALVE–PUMP SUCTION	2	AIRVAC
14	~~NOT USED~~ ACCESS HATCH		
15	10" X 10" X 6" TEE	1	AIRVAC
16	4" VIBRATION ISOLATOR	2	AIRVAC
17	4" CHECK VALVE–PUMP DISCHARGE	2	AIRVAC
18	3/4 H.P. AIR COMPRESSOR (SEE NOTE)	1	AIRVAC
19	8" BUTTERFLY VALVE W/AIR ACTUATOR	2	AIRVAC
20	8" VACUUM HEADER ASSEMBLY	2	AIRVAC
21	4" PLUG VALVE–PUMP DISCHARGE	2	AIRVAC
22	6" PLUG VALVE––VACUUM MAINS	1	AIRVAC
23	10" PLUG VALVE––VACUUM MAINS	4	AIRVAC
24	~~2" SUMP VALVE~~ NOT USED	2	AIRVAC
25	10" X 8" TEE	1	AIRVAC
26	10" X 10" X 8" TEE	3	AIRVAC
27	10" SPOOL	2	AIRVAC
28	10" X 8" TEE WITH BLIND FLANGE	1	AIRVAC
29	6" SPOOL	5 ~~4~~	AIRVAC
30	6" FLG X FLG 90° BEND	2	AIRVAC
31	6" X 4" X 6" TEE	2	AIRVAC
32	4" PLUG VALVE– SUCTION	2 ~~1~~	AIRVAC
33	4" FLG X FLG 90° BEND	1	SEC 15060
34	4" FLG X FLG SPOOL	4 ~~2~~	SEC 15060
35	4" FLG X FLG TEE	2	AIRVAC
36	10" DISCHARGE HEADER AIR	1	SEC 15060
37	4" PUMP DISCHARGE	1	SEC 15060
38	10" X 4" REDUCER	1	SEC 15060
39	4" X 2'–6" LONG WALL PIPE	1	SEC 15060
40	4" COMPOST FILTER DRAIN	1	SEC 15060
41	4" DRAIN TRAP	1	SEC 15060
42	4" COUPLING	2	SEC 15060
43	LINK SEAL– SEE PIPE SIZE	4	SEC 15060
44	4" CLEANOUT	3 ~~2~~	SEC 15060
45	3" VACUUM PUMP DISCHARGE	4	SEC 15060
46	~~4" CLEANOUT~~ NOT USED	1	AIRVAC
47	2" VACUUM VALVE	1	AIRVAC
48	VACUUM VALVE PIPING	1	SEC 15060
49	VACUUM GAGE PIPING	2	SEC 15060

NOTE:

1. PROVIDE AIR PIPING BETWEEN AIR COMPRESSOR 18 AND TANK ISOLATION VALVES 19 PER REQUIREMENTS OF AIRVAC.
2. SPECIFIC LOCATIONS AND ANCHORAGE OF VACUUM EQUIPMENT AND SEWER PIPIONG INTO STATION SUBJECT TO EQUIPMENT SUPPLIED. SUBMIT DIMENSIONAL PLAN OF ALL EQUIPMENT PRIOR TO CONSTRUCTION.
3. VAS PIPING ELEVATIONS SUBJECT TO EQUIPMENT FURNISHED. COORDINATED ELEVATION W/MANUFATURER PRIOR TO CONSTRUCTION.
4. VACUUM GAGE ENCLOSURE – 2' x 1'–6" x 9" DEEP, 12 GA. STEEL, W/ BULLET–PROOF GLASS FRONT BOLTED TO 2" FLANGE LIP. ANCHOR TO WALL W/ CHEMICAL ANCHORS, 3" MIN. EMBEDMENT. PROVIDE 8" DIAM. (0" – 30") VACUUM GAGES AND CONVENIENCE OUTLET WITHIN ENCLOSURE. PROVIDE 3 – 2" SLEEVES THROUGH WALL FOR PIPING AND ELECTRICAL WIRING.
5. PROVIDE VALVED AND BLIND FLANGED CONNECTION FOR PORTABLE VACUUM PUMP CONNECTION DURING POWER FAILURES. CONNECTION TYPICAL FOR ONE VACUUM DISCHARGE LINE ONLY.

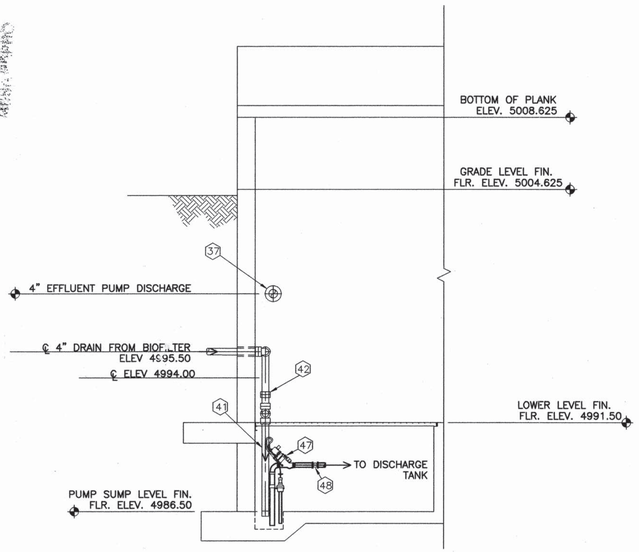

C/10 **BUILDING SECTION LOOKING SOUTH**
SCALE: 1/4" = 1'-0"

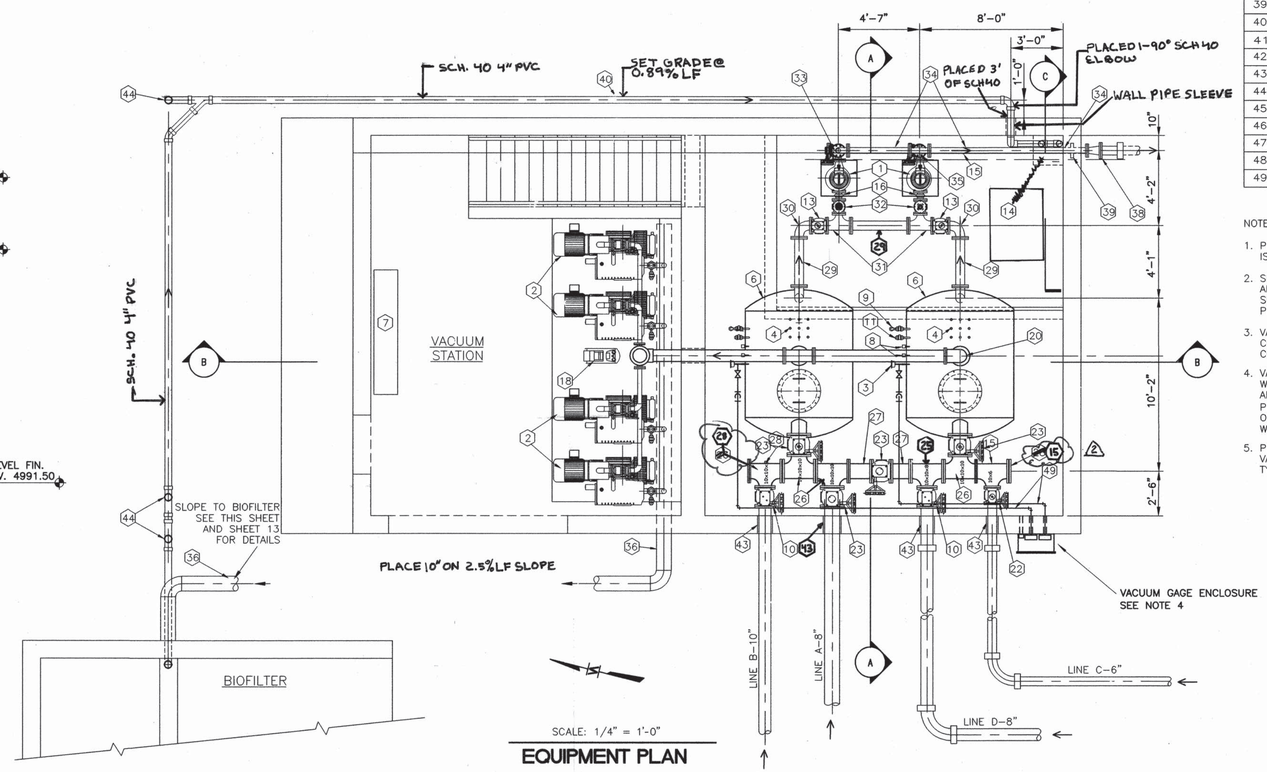

SCALE: 1/4" = 1'-0"
EQUIPMENT PLAN

CITY PROJECT #567292

COUNTY OF BERNALILLO
ENVIRONMENTAL HEALTH AND
PUBLIC WORKS DEPARTMENTS

BERNALILLO COUNTY STATE OF NEW MEXICO

NORTH VALLEY AREAS B AND F VACUUM STATION

EQUIPMENT & SECTION PLAN BELOW AND AT GRADE LEVEL

PROJECT NO. 96034 | SHEET 10 OF 19

WILSON & COMPANY

X:\PUBLIC\PROJECTS\96034\DRAWINGS\EQPLAN1-9-1-99.DWG

AS-BUILT INFORMATION
CONTRACTOR TRIAD BUILDERS of NM
WORK STAKED BY TRIAD DATE 11/99
INSPECTOR'S ACCEPTANCE BY WILSONS & CO. DATE 9/00
FIELD VERIFICATION BY DATE
DRAWINGS CORRECTED BY WILSONS & CO. DATE 9/00
MICRO-FILM INFORMATION
RECORDED BY DATE
NO.

BENCH MARKS

SURVEY INFORMATION
FIELD NOTES
NO. | BY | DATE

ENGINEER'S SEAL
ROBERT PAUL FOX (12763) REGISTERED PROFESSIONAL ENGINEER

NO.	DATE	KEY NOTES	BY
2	9/2/96	REMARKS	MAR

REVISIONS

WILSON & COMPANY, ENGINEERS & ARCHITECTS
DESIGNED BY HMK DATE 11/20/98
DRAWN BY PJM DATE 11/20/98
CHECKED BY JDC DATE 11/20/98

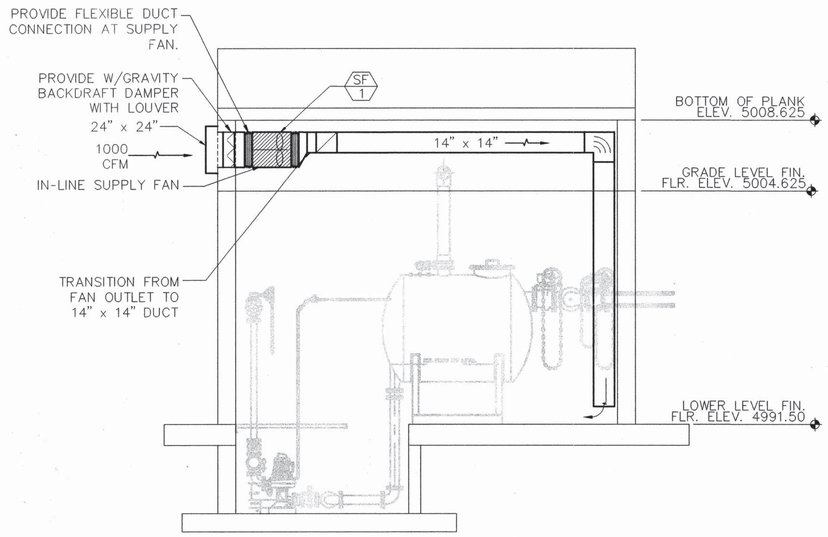

A BUILDING SECTION AT LOWER LEVEL LOOKING SOUTH

SCALE: 1/4" = 1'-0"

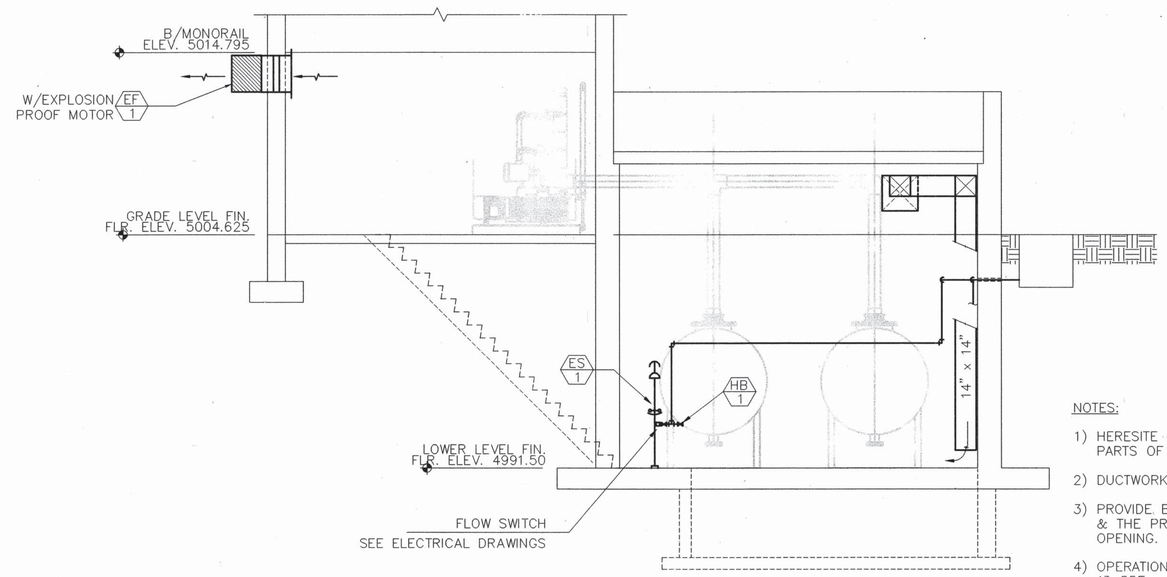

B BUILDING SECTION LOOKING EAST

SCALE: 1/4" = 1'-0"

NOTES:

1) HERESITE COAT ALL NON-ALUMINUM PARTS OF EQUIPMENT.
2) DUCTWORK TO BE ALUMINUM.
3) PROVIDE BIRDSCREEN FOR LOUVER & THE PROPELLER FAN WALL OPENING.
4) OPERATION OF THERMOSTAT SET AT 55F.
5) INSULATE ALL POTABLE WATER PIPING WITH 1/2" FIBERGLASS INSULATION. PROTECT INSULATION WITH ASJ JACKET.

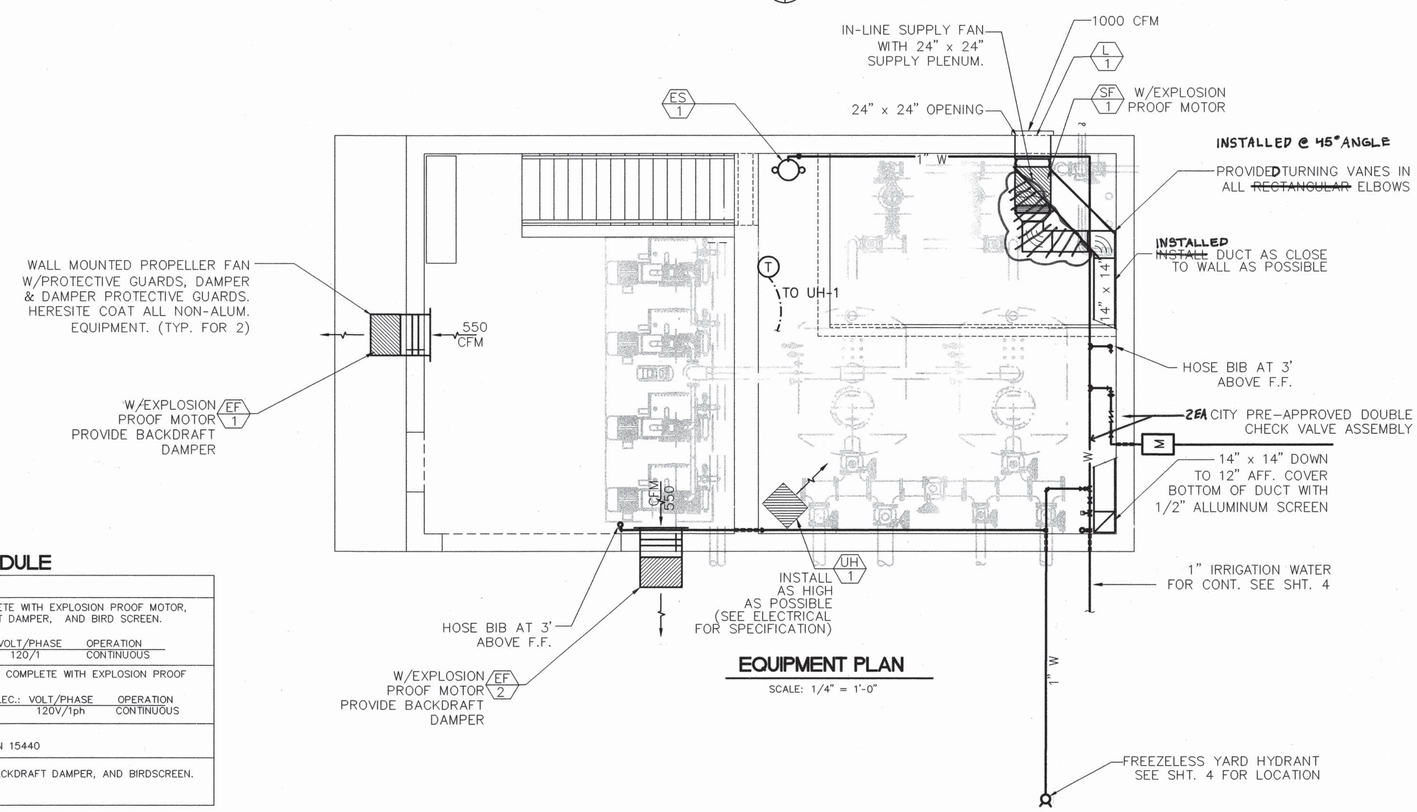

EQUIPMENT PLAN

SCALE: 1/4" = 1'-0"

SHEET NORTH

EQUIPMENT SCHEDULE

SYMBOL	DESCRIPTION
EF-1 (2 UNITS)	EXHAUST FAN: CARNES MODEL NO. LYDK COMPLETE WITH EXPLOSION PROOF MOTOR, WALL HOUSING, MOTOR SIDE GUARD, BACKDRAFT DAMPER, AND BIRD SCREEN. CFM DRIVE HP RPM ELEC.: VOLT/PHASE OPERATION 550 DIRECT 1/6 1350 120/1 CONTINUOUS
SF-1	SUPPLY FAN: GREENHECK MODEL NO. BSQ-100-4 COMPLETE WITH EXPLOSION PROOF MOTOR, ISOLATORS, & MOTOR SIDE GUARD. CFM DRIVE HP RPM ESP ELEC.: VOLT/PHASE OPERATION 1000 BELT 1/4 1335 0.0125 120V/1ph CONTINUOUS
ES-1	EMERGENCY SHOWER: REFER TO SPEC. SECTION 15440
L-1	LOUVER: CARNES FLGA 24"x24"H W/GRAVITY BACKDRAFT DAMPER, AND BIRDSCREEN. 1.8SF MIN. FREE AREA

CITY PROJECT #567292

COUNTY OF BERNALILLO
ENVIRONMENTAL HEALTH AND
PUBLIC WORKS DEPARTMENTS

BERNALILLO COUNTY STATE OF NEW MEXICO

NORTH VALLEY AREAS B AND F
VACUUM STATION

MECHANICAL PLAN & SECTIONS
SECTIONS & DETAILS

PROJECT NO. 96034 | SHEET 11 OF 19

AS-BUILT INFORMATION
CONTRACTOR TRIAD BUILDERS OF NM
WORK STAKED BY TRIAD DATE 11/99
INSPECTOR'S ACCEPTANCE BY WILSON & CO. DATE 3/00
FIELD VERIFICATION DATE
DRAWINGS CORRECTED BY WILSON & CO. DATE 9/00
MICRO-FILM INFORMATION
RECORDED BY DATE
NO.

BENCH MARKS

SURVEY INFORMATION
FIELD NOTES
NO. BY DATE

ENGINEER'S SEAL
ROBERT J. PAULETTO NEW MEXICO 12763 REGISTERED PROFESSIONAL ENGINEER

NO.	DATE	REVISIONS	BY
2	9/30/00	TEXT EDIT	LAR
1	9/3/99	RELOCATION PUMP STATION	RJP
		REMARKS	BY

WILSON & COMPANY, ENGINEERS & ARCHITECTS
DESIGNED BY RJP DATE 11/20/98
DRAWN BY RPS DATE 11/20/98
CHECKED BY RJP DATE 11/20/98

SCANNED BY MESA REPRO

WILSON & COMPANY X:\PUBLIC\PROJECTS\96034\DRAWINGS\VACSTA\MECHPLAN-9-1-99.DWG

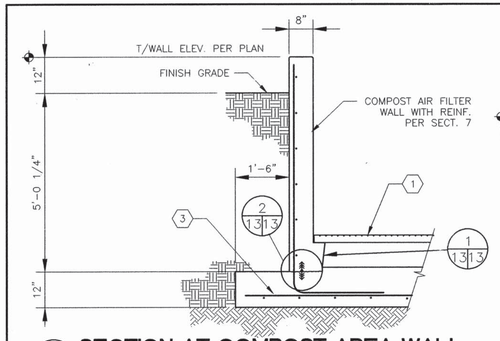

16/1313 SECTION AT COMPOST AREA WALL
1/2" = 1'-0"

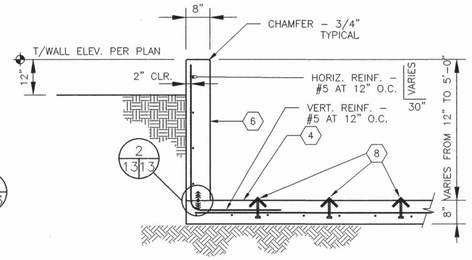

17/1313 SECTION AT RAMP WALL
1/2" = 1'-0"

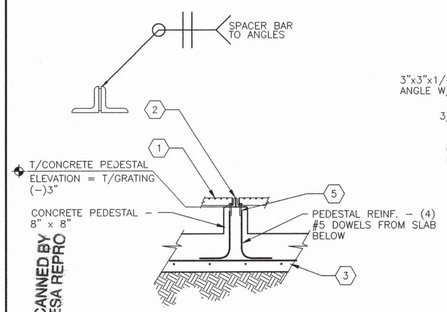

11/1313 SECTION AT SUPPORT PEDESTAL
1/2" = 1'-0"

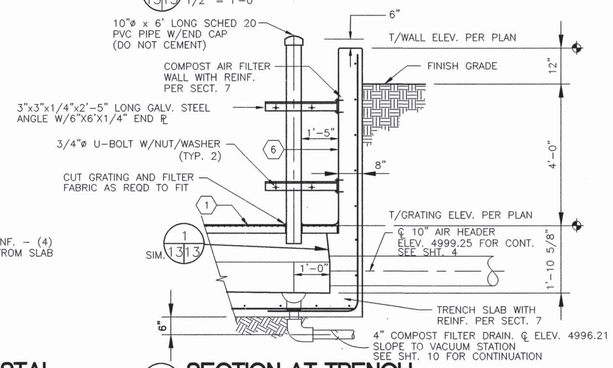

12/1313 SECTION AT TRENCH
1/2" = 1'-0"

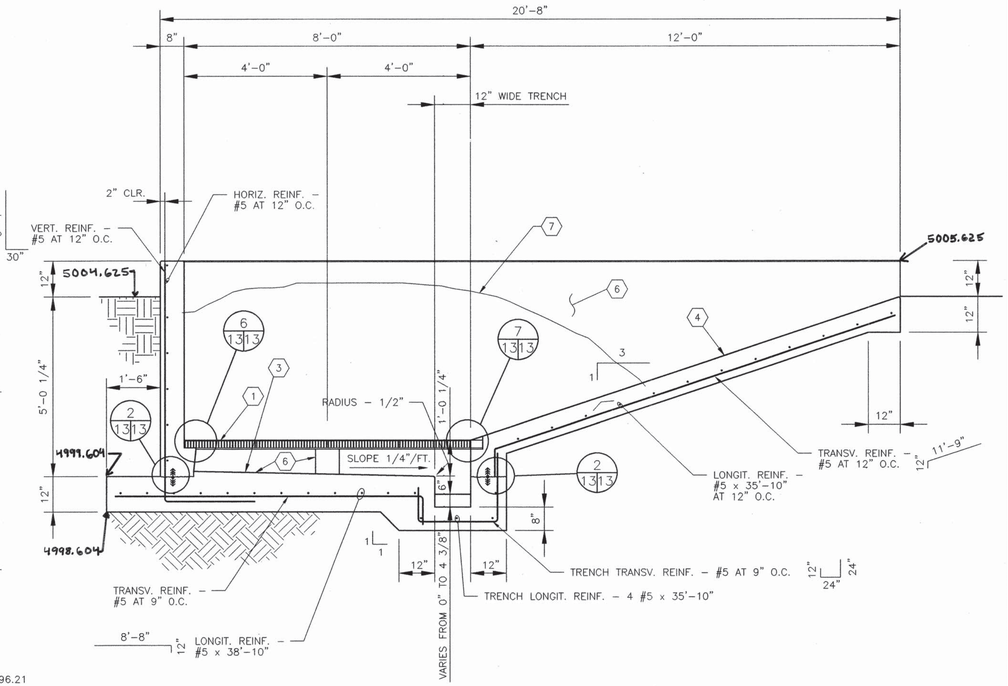

13/-- SECTION - TRANSVERSE
1/2" = 1'-0"

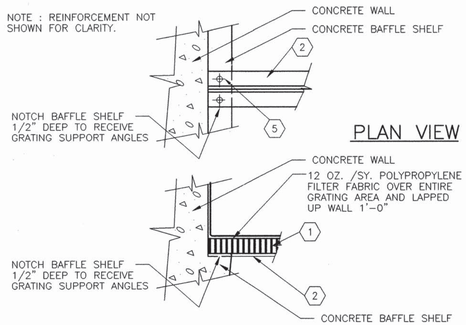

6/1313 SECTION AT ANGLE BEARING
1" = 1'-0"

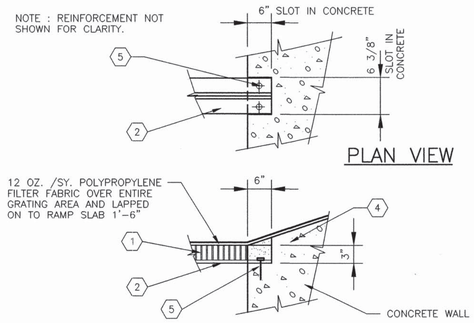

7/1313 SECTION AT ANGLE BEARING
1" = 1'-0"

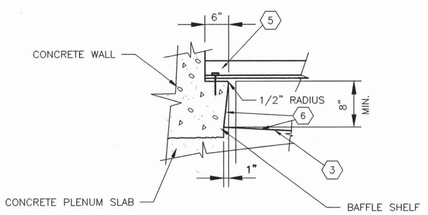

1/1313 SECTION AT BAFFLE SHELF
1" = 1'-0"

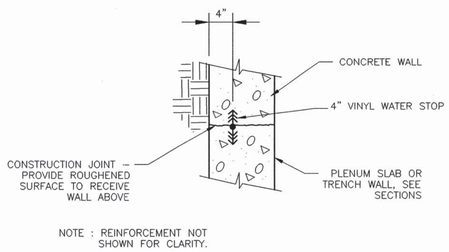

2/1313 SECTION AT WATER STOP
1" = 1'-0"

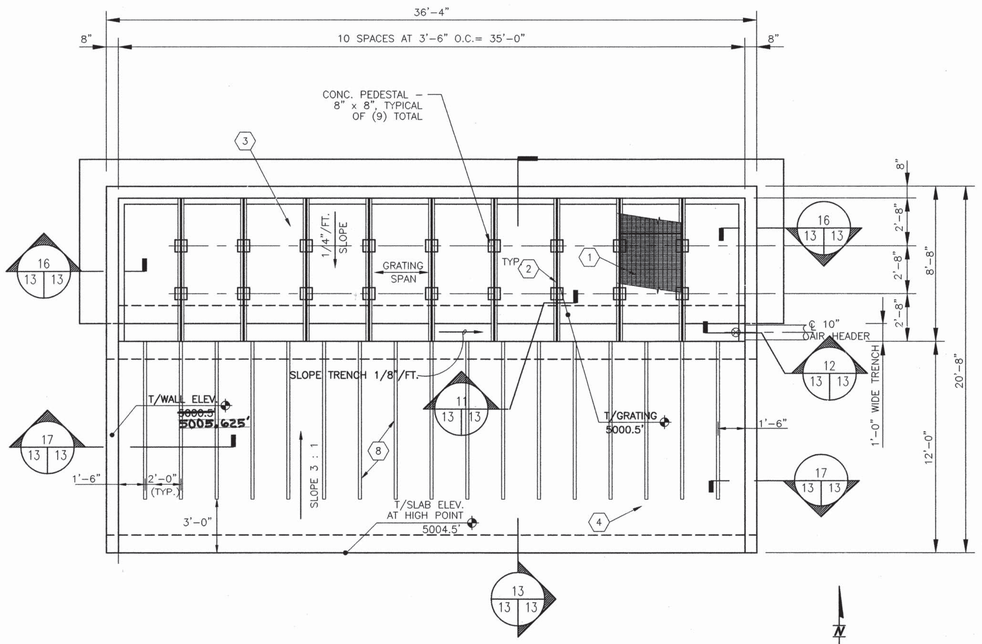

PLAN - COMPOST AIR FILTER
1/4" = 1'-0"

GENERAL SHEET NOTES :

A) FOR PIPE SIZES AND LOCATIONS, SEE EQUIPMENT PLAN, SECTIONS AND DETAILS.
B) COMPOST AIR FILTER LOCATION SHALL BE SITE PLAN.
C) REFER TO GENERAL NOTES ON SHEET 2 FOR CONCRETE AND CONCRETE REINFORCEMENT INFORMATION.
D) REFER TO SHEET 2 FOR TYPICAL CONCRETE CORNER DETAILS.
E) REFER TO SHEET 2 FOR ADDITIONAL REINFORCEMENT AT TYPICAL CONCRETE WALL PENETRATION.

SHEET KEYED NOTES : (XX)

1) GRATING TYPE 2
2) ALUMINUM ANGLE - DOUBLE L 3 x 3 x 1/2, BACK TO BACK WITH SPACER BAR - 1/4 x 2 1/2 x 2 1/2 AT 12" O.C. MAXIMUM BETWEEN AND AT EACH ENDS, PROVIDE 1/16" THICK NEOPRENE GASKET AT ALL ANGLE TO CONCRETE BEARING LOCATIONS
3) CAST-IN-PLACE CONCRETE PLENUM SLAB - 1'-0" THICK MINIMUM
4) CAST-IN-PLACE RAMP SLAB - 8" THICK
5) ~~PROVIDE CHEMICAL ANCHORS - STAINLESS STEEL, THREADED ROD 1/2" DIAMETER x 4" LONG W/ 3" EMBEDMENT EACH ANGLE AT CONCRETE BEARING~~ EMBEDED IN CONC.
6) BITUMASTIC EPOXY COATING ALL INTERIOR SURFACES.
7) COMPOST - SEE NOTE BELOW
8) 3" x 3" x 9'-0" GALV. ANGLE WITH 3/4" X 3" LONG BOLT ANCHORS @ 1'-0" O.C. EXPOSE ANGLE 1" ABOVE FINISHED SLAB. BEVEL ENDS OF ANGLE IRON PRIOR TO EMBEDMENT.

NOTE: ~~INSTALL 60~~ INSTALLED 60 C.Y. OF COA-FURNISHED COMPOST AND PLACE PER COA STAFF DIRECTION. COMPOST IS AVAILABEL FOR PICKUP AT CITY COMPOSTING FACILITY NEAR DOUBLE EAGLE II AIRPORT.

CITY PROJECT #567292

COUNTY OF BERNALILLO
ENVIRONMENTAL HEALTH AND
PUBLIC WORKS DEPARTMENTS

BERNALILLO COUNTY · STATE OF NEW MEXICO

NORTH VALLEY AREAS B AND F
VACUUM STATION

COMPOST FILTER
PLAN, SECTIONS, & DETAILS

PROJECT NO. 96034 | SHEET 13 OF 19

AS-BUILT INFORMATION
CONTRACTOR TRIAD BUILDERS OF NM DATE 11/99
WARR. STAMED BY TRIAD DATE
INSPECTOR'S ACCEPTANCE BY WILSON & CO. DATE 3/00
FIELD VERIFICATION BY DATE
DRAWINGS CORRECTED BY WILSON & CO. DATE 9/00
MICRO-FILM INFORMATION DATE
RECORDED BY DATE
NO.

BENCH MARKS

SURVEY INFORMATION
FIELD NOTES
NO. | BY | DATE

ENGINEER'S SEAL

NO.	DATE	REVISIONS	BY
2	9/20/00	ELEVATION TEXT EDIT	JDC
1	9/3/99	RELOCATION PUMP STATION	RJP

WILSON & COMPANY, ENGINEERS & ARCHITECTS
DESIGNED BY RJP DATE 11/20/98
DRAWN BY JT DATE 11/20/98
CHECKED BY JDC DATE 11/20/98

WILSON & COMPANY

X:\PUBLIC\PROJECTS\96034\DRAWINGS\VACSTA\STRUCT\6034VS-SHT13-9-1-99.DWG

ONE LINE DIAGRAM LEGEND

4.16 KV — 480V — 750 KVA, 3 PHASE, 3 WIRE, 5.75 PERCENT Z
TRANSFORMER WITH PRIMARY AND SECONDARY VOLTAGE, KVA RATING, PERCENT IMPEDANCE. NUMBER OF PHASES, WIRES AND WINDING CONNECTIONS, IF APPLICABLE AS SHOWN.

100 / 3 KW
MOTOR WITH EXPECTED HORSEPOWER SHOWN, OR NON-MOTOR LOAD SUCH AS A UNIT HEATER IN KW. LOADS SHOWN MAY VARY WITH EQUIPMENT FURNISHED. IF EQUIPMENT HAS LARGER LOAD. ASSOCIATED CABLE. CONDUIT, AND ELECTRICAL EQUIPMENT SHALL BE ENLARGED AS REQUIRED.

MOTOR STARTER ON CONTROL PANEL — CABLE AND CONDUIT AS REQUIRED BY MANUFACTURER
ONE-LINE TO A PACKAGE UNIT, SUCH AS A BELT FILTER PRESS OR AIR COMPRESSOR, SHALL IMPLY THAT ANY AND ALL ASSOCIATED EQUIPMENT SHALL BE INSTALLED AND WIRED.

15 — M201; 3-#10, #10G; 3-#14; CS; 3-#14, 1/2"
CIRCUIT M201 WITH 3-#10 POWER CONDUCTORS, 1-#10 GROUND CONDUCTOR AND 3-#14 CONTROL CONDUCTORS ALL IN 1" CONDUIT TO 15 HP MOTOR AND CONTROL STATION. CONDUIT BODIES, JUNCTION BOXES, OR PULL BOXES ARE NOT NECESSARILY SHOWN.

INDICATES THAT ALL OR PART OF CIRCUIT IS ROUTED UNDERGROUND EITHER IN DUCT BANK OR DIRECT BURIED. CONDUIT SIZE SHOWN IS FOR ABOVE GRADE OR INSIDE STRUCTURES. SEE DUCT BANK SECTIONS FOR CONDUIT SIZE OF UNDERGROUND PORTION OF CIRCUIT.

52
MEDIUM VOLTAGE DRAWOUT CIRCUIT BREAKER

MEDIUM VOLTAGE MOTOR STARTER (CONTACTOR) FULL VOLTAGE, NON-REVERSING UNLESS NOTED OTHERWISE

3P-20
LOW VOLTAGE CIRCUIT BREAKER, 3-POLE, 20 AMP

SIZE 2
NEMA SIZE 2 COMBINATION MAGNETIC MOTOR STARTER, FULL VOLTAGE, NON-REVERSING UNLESS NOTED OTHERWISE

3P-60
3-POLE, 60 AMP COMBINATION MAGNETIC CONTACTOR

(2) 4200V-120V
POTENTIAL TRANSFORMER WITH NUMBER AND VOLTAGE RATING SHOWN

(3)-200/B
CURRENT TRANSFORMER WITH NUMBER AND TURNS RATIO SHOWN

600 / 200
CURRENT LIMITING TYPE FUSE AND DISCONNECT SWITCH, AMP RATING AS SHOWN

600
NON-FUSED DISCONNECT SWITCH

1-#16 TSP — ONE, SINGLE PAIR, TWISTED, SHIELDED #16 INSTRUMENT CABLE
3-7/C#14 — THREE, SINGLE, SEVEN CONDUCTOR #14 MULTICONDUCTOR CONTROL CABLES

GENERAL NOTES

1. IN GENERAL CONDUIT ROUTING IS NOT SHOWN ON THE PLANS. THE CONTRACTOR SHALL BE RESPONSIBLE FOR ROUTING ALL CONDUITS INCLUDING THOSE SHOWN ON ONE-LINES AND HOMERUNS. SEE SPECIFICATIONS FOR CONDUIT INSTALLATION REQUIREMENTS. CONDUIT ROUTING AND STUB-UP LOCATIONS THAT ARE SHOWN ARE APPROXIMATE. EXACT ROUTINGS SHALL BE AS REQUIRED FOR EQUIPMENT FURNISHED.
2. HEAVY LINES INDICATE NEW WORK OR EQUIPMENT FOR THIS CONTRACT. LIGHT LINES INDICATE EXISTING EQUIPMENT OR WORK UNDER ANOTHER CONTRACT. DASHED LINES INDICATE FUTURE WORK OR EQUIPMENT.
3. THIS IS A GENERAL LEGEND AND ABBREVIATIONS SHEET, SOME SYMBOLS AND ABBREVIATIONS MAY NOT BE UTILIZED ON THIS SPECIFIC PROJECT.

SCHEMATIC SYMBOLS

- NORMALLY OPEN PUSH BUTTON
- NORMALLY CLOSED PUSH BUTTON
- NORMALLY OPEN, MAINTAINED PUSH BUTTON
- NORMALLY CLOSED, MAINTAINED PUSH BUTTON
- INDICATING LIGHT
  - R = RED
  - G = GREEN
  - B = BLUE
  - W = WHITE
  - A = AMBER
  - Y = YELLOW
- NORMALLY CLOSED GEARED LIMIT SWITCH
- NORMALLY OPEN GEARED LIMIT SWITCH
- TORQUE SWITCH
- FUSE WITH AMP RATING AND CLASS SHOWN
- MOTOR CONTACTOR COIL
- RELAY COIL
- POTENTIOMETER
- SWITCH
- MS — TOGGLE SWITCH MANUAL STARTER
- OVERLOAD
- PLC OUTPUT — AO-ANALOG, DO-DIGITAL
- PLC INPUT — AI-ANALOG, DI-DIGITAL
- GROUND
- FLOAT SWITCH - OPENS ON RISING LEVEL
- FLOAT SWITCH - CLOSES ON RISING LEVEL
- PRESSURE SWITCH - OPENS ON RISING PRESSURE
- PRESSURE SWITCH - CLOSES ON RISING PRESSURE
- NORMALLY CLOSED, WITH TIME DELAY ON CLOSING AFTER COIL IS DE-ENERGIZED
- NORMALLY OPEN, WITH TIME DELAY ON OPENING AFTER COIL IS DE-ENERGIZED
- NORMALLY CLOSED, WITH TIME DELAY ON OPENING AFTER COIL IS ENERGIZED
- NORMALLY OPEN, WITH TIME DELAY ON CLOSING AFTER COIL IS ENERGIZED
- TEMPERATURE SWITCH - OPENS ON RISING TEMPERATURE
- TEMPERATURE SWITCH - CLOSED ON RISING TEMPERATURE
- FLOW SWITCH - OPENS ON INCREASING FLOW
- FLOW SWITCH - CLOSES ON INCREASING FLOW
- LIMIT SWITCH - NORMALLY OPEN
- LIMIT SWITCH - NORMALLY CLOSED
- WIRE CONNECTION POINT
- EXTERNAL WIRE TERMINATION POINT
- NORMALLY CLOSED CONTACT
- NORMALLY OPEN CONTACT
- 48V / 100VA / CPT / 120V — CONTROL POWER TRANSFORMER WITH PRIMARY SECONDARY AND VA RATING SHOWN.

CONDUIT AND WIRING INSTALLATION

- CONDUIT EXPOSED
- CONDUIT CONCEALED
- CONDUIT TURNING DOWN
- CONDUIT TURNING UP
- CONDUIT PLUGGED FLUSH
- CONDUIT CAPPED
- HOME RUN
- L1-3 — HOME RUN TO LIGHTING PANEL L1, CIRCUIT NUMBER 3, SHORT DASH IS PHASE CONDUCTOR, LONG DASH IS NEUTRAL CONDUCTOR, CURVED LINE IS GROUND CONDUCTOR. CONDUCTOR LABELED 'S' IS SWITCHED LEG. CONDUCTOR LABELED 'T' IS TRAVELER. CONDUCTOR IS #12 THW UNLESS OTHERWISE SHOWN.
- E — UNDERGROUND CONCRETE ENCASED DUCT BANK
- EE — DIRECT BURIED CONDUIT
- EEE — DIRECT BURIED CABLE
- GROUND CABLE

MISCELLANEOUS PLAN SYMBOLS

- GROUND ROD. SEE ELECTRICAL GROUND WELL DETAIL, SHEET 19.
- GROUND CONNECTION
- JB — JUNCTION BOX
- PB — PULL BOX
- 25 — MOTOR (HP SHOWN IN CIRCLE)
- MISCELLANEOUS DEVICE
- 3-PHASE MANUAL STARTER WITH PILOT LIGHT
- DISCONNECT SWITCH
- MAGNETIC MOTOR STARTER
- LIGHTING PANEL
- LIGHTING PANEL WITH TRANSFORMER OFFSET EITHER ABOVE OR BELOW
- POWER PANEL
- S — INTRUSION DOOR SWITCH
- S — SMOKE DETECTOR
- A — SURGE ARRESTER
- A — FLUORESCENT TYPE LIGHTING FIXTURE. NUMBER CORRESPONDS TO LIGHT FIXTURE SCHEDULE
- B — LIGHTING FIXTURE INCANDESCENT OR HID TYPE, CORRESPONDS TO LIGHT FIXTURE SCHEDULE
- DUPLEX RECEPTACLE, 120V
- 30 — 240V, 1 PHASE RECEPTACLE. AMP RATING NOTED
- 60 — 480V, 3 PHASE, WELDING RECEPTACLE, AMP RATING NOTED.
- TELEPHONE OUTLET
- S — SINGLE POLE SWITCH
- S_3 — 3-WAY SWITCH
- S_4 — 4-WAY SWITCH
- S_M — SINGLE PHASE MANUAL STARTER WITH PILOT LIGHT

ABBREVIATIONS

A	AMPERE, ALARM
AC	ALTERNATING CURRENT
ACB	AIR CIRCUIT BREAKER
AFD	ADJUSTABLE FREQUENCY DRIVE
AM	AMMETER
ANN	ANNUNCIATOR
AR	ALARM RELAY
AS	AMMETER SWITCH
AWG	AMERICAN WIRE GAGE
BC	BATTERY CHARGER
BT	BEARING TEMPERATURE
C	CLOSE, COUNTER OR CONTACTOR
CAP	CAPACITOR
CB	CIRCUIT BREKER
CB'a'	CIRCUIT BREAKER AUXILIARY CONTACT (OPEN WHEN BREAKER IS OPEN AND CLOSED WHEN BREAKER IS CLOSED OR TRIPPED)
CB'b'	CIRCUIT BREAKER AUXILIARY CONTACT (CLOSED WHEN BREAKER IS OPEN AND OPEN WHEN BREAKER IS CLOSED OR TRIPPED)
CI	CELL INTERLOCK
CKT	CIRCUIT
CL2	CHLORINE
CDS	CABLE OPERATED SWITCH
CP	CONTROL PANEL
CPT	CONTROL POWER TRANSFORMER
CR	CONTROL RELAY
CS	CONTROL STATION
CT	CYCLE TIMER OR CURRENT TRANSFORMER
CTC	CYCLE TIMER CLUTCH
CTM	CYCLE TIMER MOTOR
2/C	2 CONDUCTOR
4"C	4" CONDUIT
DC	DIRECT CURRENT
DI	DOOR INTERLOCK
DM	DAMPER MOTOR OR DEMAND METER
DPDT	DOUBLE POLE DOUBLE THROW
DPST	DOUBLE POLE SINGLE THROW
DPR	DIFFERENTIAL PRESSURE REGULATOR
DPS	DIFFERENTICAL PRESSURE SWITCH
DS	DISCONNECT SWITCH
DVLS	DISCHARGE VALVE LIMIT SWITCH
EC	EMPTY CONDUIT
EL	ELEVATION OR EMERGENCY LIGHT
EMH	ELECTRICAL MANHOLE
ER	ELECTRODE RELAY
ES	END SWITCH
ETM	ELAPSED TIME METER
EHH	ELECTRICAL HANDHOLE
F	FORWARD
FS	FLOW SWITCH
G	GROUND
GD	GROUND DETECTOR
GEN	GENERATOR
GFI	GROUND FAULT INTERRUPTER
GLS	GEARED LIMIT SWITCH
#8G	#8 GROUND WIRE
H	HIGH OR HUMIDISTAT
HC	HOT CIRCUIT
H-O-A	HAND-OFF-AUTO
H-O-R	HAND-OFF-REMOTE
HP	HORSEPOWER
HWCO	HIGH WATER CUTOFF
HZ	HERTZ (CYCLE)
I/O	INPUT/OUTPUT
JB	JUNCTION BOX
K	KEY INTERLOCK
KCM	THOUSAND CIRCULAR MIL
KV	KILOVOLT
KVA	KILOVOLT AMPERE
KVAR	KILOVAR
KW	KILOWATT
KWH	KILOWATT HOUR
L	LOW LEVEL
LA	LIGHTNING ARRESTER
LC	LIGHTING CONTACTOR
L-O-R	LOCAL-OFF-REMOTE
LP	LIGHTING PANEL
LS	LIMIT OR LEVEL SWITCH
LWCO	LOW WATER CUTOFF
M	MAGNETIC MOTOR STARTER
MA	MILLIAMPERE
MCC	MOTOR CONTROL CENTER
MCLU	MOTOR CONTROL LINEUP
MD	MOISTURE DETECTOR
MFM	MAGNETIC FLOW METER
MFR	MANUFACTURER
MH	MANHOLE OR MOUNTING HEIGHT
MOG	MOTOR OPERATED GATE
MOV	MOTOR OPERATED VALVE
MS	MANUAL MOTOR STARTER
MSH	MOTOR SPACE HEATER
MV	MILLIVOLT
MVA	MEGAVOLT AMPERE
N	NEUTRAL
NC	NORMALLY CLOSED
NO	NORMALLY OPEN, NUMBER
O	OPEN
OL	OVERLOAD
P	PRIMARY
PB	PUSHBUTTON OR PULL BOX
PE	PHOTOELECTRIC
PF	POWER FACTOR METER
PH	PHASE, CHEMICAL TERM
PLC	PROGRAMMABLE LOGIC CONTROLLER
PRV	POWER ROOF VENTILATOR
PRXS	PROXIMITY SWITCH
PS	PRESSURE SWITCH
PT	POTENTIAL TRANSFORMER, PROGRAM TIMER
2P	2-POLE
R	RAISE, RELAY OR REVERSE
RECP	RECEPTACLE
RT	REPEATING TIMER
RTD	RESISTANCE TYPE TEMP DETECTOR
RTU	REMOTE TERMINAL UNIT
S2	SIZE 2 STARTER
SH	SPACE HEATER
SN	SOLID NEUTRAL
SO	SOLENOID OILER
SP	SINGLE POLE
SPDT	SINGLE POLE DOUBLE THROW
SPST	SINGLE POLE SINGLE THROW
SS	SELECTOR SWITCH
SUPV	SUPERVISORY CONTROL
SV	SOLENOID VALVE
SWBD	SWITCHBOARD
SWGR	SWITCHGEAR
T	THERMOSTAT, TIMER, OR TOTALIZER
TACH	TACHOMETER
TB	TERMINAL BLOCK
TD	TIME DELAY RELAY
TDE	TIME DELAY AFTER ENERGIZATION
TDO	TIME DELAY AFTER DE-ENERGIZATION
TEMP	TEMPERATURE
THH	TELEPHONE HANDHOLE
TM	TIMER MOTOR
TOS	TORQUE SWITCH
TTB	TELEPHONE TERMINAL BOX
TSP	TWISTED SHIELDED PAIR
UG	UNDERGROUND
UV	UNDER VOLTAGE, ULTRAVIOLET
UPS	UNINTERRUPTIBLE POWER SUPPLY
V	VOLTS
VA	VOLT AMPERE
VAR	VARMETER
VLS	VALVE LIMIT SWITCH
VM	VOLTMETER
VPI	VALVE POSITION INDICATOR
VS	VOLTMETER SWITCH
W	WATT
WH	WATTHOUR METER
WM	WATT METER
WP	WEATHERPROOF
X	AUXILIARY RELAY
XFMR	TRANSFORMER
XP	EXPLOSION-PROOF
Z	AUXILIARY RELAY
ZS	POSITION SWITCH

AS-BUILT INFORMATION
CONTRACTOR TRIAD BUILDERS OF NM
WORK STAKED BY TRIAD DATE 1/99
INSPECTED BY DATE
ACCEPTANCE BY: WILSON & CO. DATE 3/00
FIELD VERIFICATION BY DATE
DRAWINGS CORRECTED BY WILSON & CO. DATE 9/00

BENCH MARKS

SURVEY INFORMATION
FIELD NOTES

NO.	BY	DATE

ENGINEER'S SEAL
JOHN E. HARRELL — NEW MEXICO — 11719 — REGISTERED PROFESSIONAL ENGINEER

MICRO-FILM INFORMATION
RECORDED BY DATE
NO.

NO.	DATE	REMARKS	BY

REVISIONS

WILSON & COMPANY, ENGINEERS & ARCHITECTS
DESIGNED BY JH DATE 11/20/98
DRAWN BY DATE 11/20/98
CHECKED BY DATE 11/20/98

CITY PROJECT #567292

COUNTY OF BERNALILLO
ENVIRONMENTAL HEALTH AND
PUBLIC WORKS DEPARTMENTS

BERNALILLO COUNTY — STATE OF NEW MEXICO

NORTH VALLEY AREAS B AND F
VACUUM STATION

LEGEND/NOTES/ABBREVIATIONS

PROJECT NO. 96034 | SHEET 15 OF 19

WILSON & COMPANY
X:\PUBLIC\PROJECTS\96034\DRAWINGS\VACSTA\96034VS15.DWG

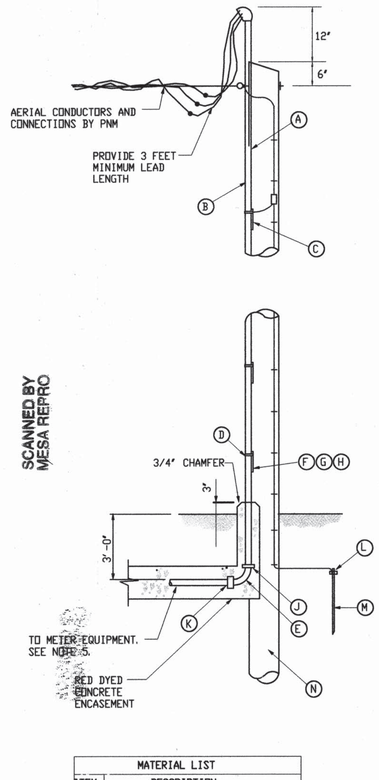

MATERIAL LIST	
ITEM	DESCRIPTION
A	CLAMP TYPE WH
B	GALVANIZED CONDUIT
C	UNIVERSAL SUPPORT BRACKET
D	PIPE STRAP KIT
E	PVC COATED RIGID METAL ELBOW
F	5/8" X MACHINE BOLT
G	5/8" LOCK NUT
H	2-1/4" SQ. WASHER
J	COUPLING
K	STEEL TO PLASTIC ADAPTOR
L	#10-#2 GROUND LUG
M	3/4" X 10' COPPERCLAD GROUND ROD
N	WOOD POLE, 35' CLASS 5

NOTES:

1. WEATHERHEAD SHALL BE 3" ABOVE NEUTRAL.
2. RISER BRACKET ASSEMBLY MUST HAVE PROVISIONS FOR GROUNDING.
3. CONTACT PNM CUSTOMER SERVICE FOR POLE QUADRANT.
4. ALL ABOVE-GRADE CONDUIT SHALL BE RIGID GALVANIZED OR IMC.
5. CONTRACTOR PROVIDES AND INSTALLS: CONDUIT, BRACKET, WEATHERHEAD, CONDUCTORS, METER BASE(S), METERING INSTRUMENT TRANSFORMER ENCLOSURE AND ALL MINOR FITTINGS.

REFERENCES TO PNM STANDARDS

(1) SEE DS-4-95 UNDERGROUND COMMERCIAL CUSTOMER OWNED SERVICE.

SEE DS-18-13.0 UNIVERSAL SUPPORT BRACKET.

SEE DS-18-20.1 GROUND ASSEMBLY.

SERVICE RISER POLE DETAIL

NOT TO SCALE

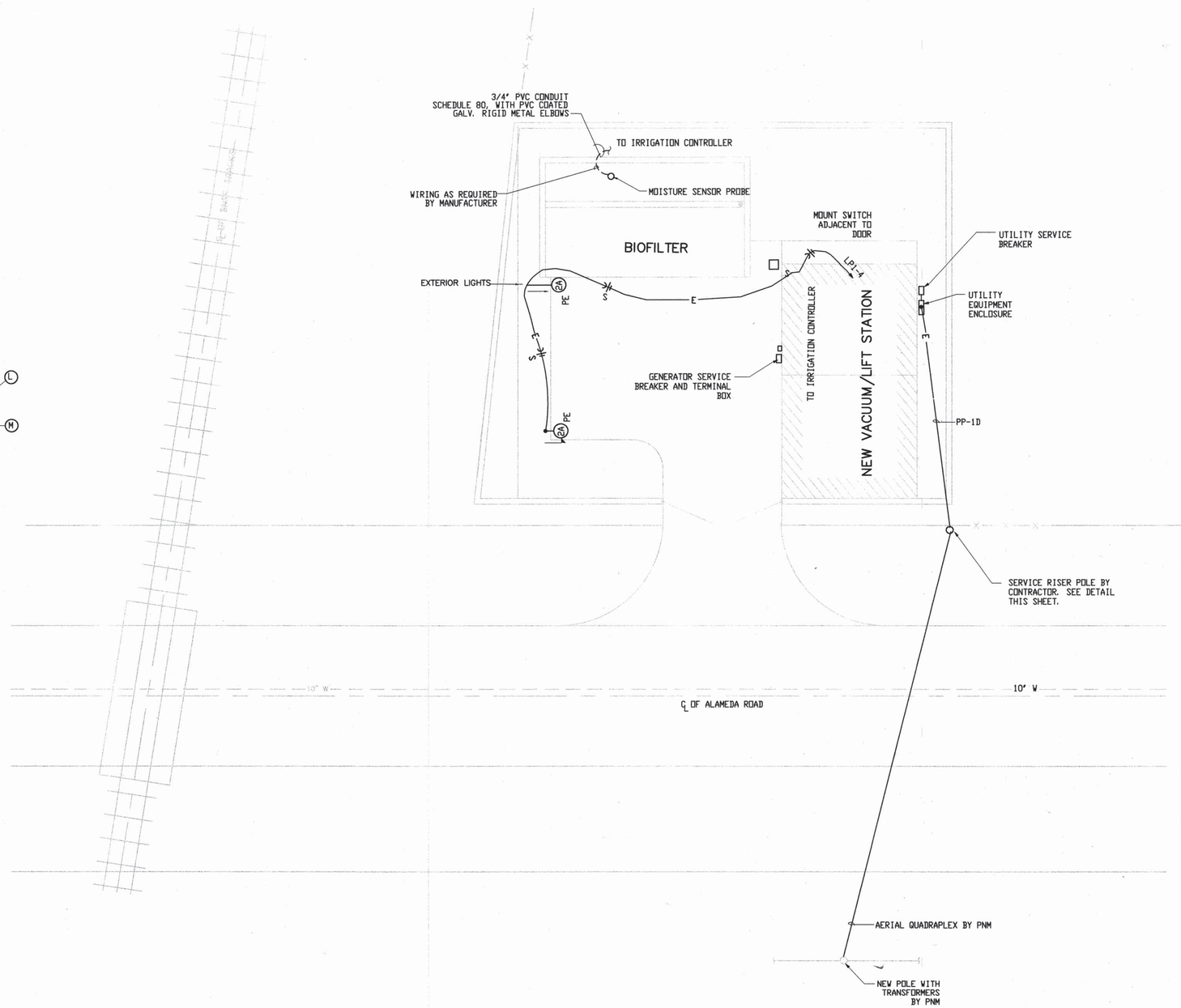

ELECTRICAL SITE PLAN

SCALE: 1"=10'

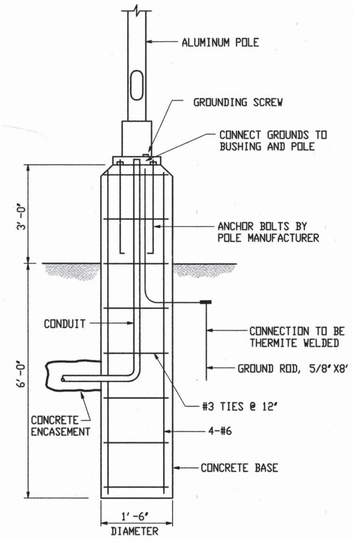

POLE BASE DETAIL

NOT TO SCALE

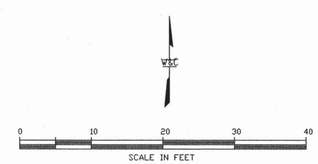

CITY PROJECT #567292

AS-BUILT INFORMATION

CONTRACTOR TRIAD BUILDERS OF NM
WORK STAKED BY TRIAD DATE 4/99
INSPECTOR'S ACCEPTANCE BY WILSON & CO. DATE 5/00
FIELD VERIFICATION BY DATE
DRAWINGS CORRECTED BY WILSON & CO. DATE 9/00
MICRO-FILM INFORMATION
RECORDED BY DATE
NO.

BENCH MARKS

SURVEY INFORMATION

FIELD NOTES

NO.	BY	DATE

ENGINEER'S SEAL

JOHN N. HARRELL NEW MEXICO 11719 REGISTERED PROFESSIONAL ENGINEER

NO.	DATE	REMARKS	BY
1	9/3/99	RELOCATED PUMP STATION	RJP

REVISIONS

WILSON & COMPANY, ENGINEERS & ARCHITECTS

		DATE
DESIGNED BY	J.H.	2/20/99
DRAWN BY	P.R.D.	2/20/99
CHECKED BY	R.J.P.	2/20/99

COUNTY OF BERNALILLO
ENVIRONMENTAL HEALTH AND
PUBLIC WORKS DEPARTMENTS

BERNALILLO COUNTY STATE OF NEW MEXICO

NORTH VALLEY AREAS B AND F
VACUUM STATION

ELECTRICAL SITE LAYOUT

PROJECT NO. 96034

SHEET 16 OF 19

WILSON & COMPANY

X:\PUBLIC\PROJECTS\96034\DRAWINGS\VACSTA\ELECSITE-9-1-99.DWG

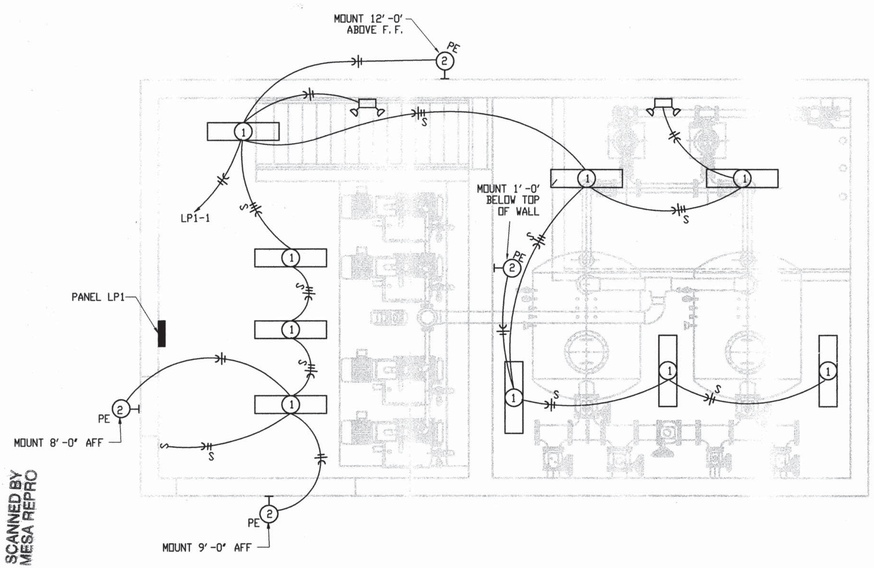

LIGHTING PLAN

SCALE 1/4" = 1'-0"

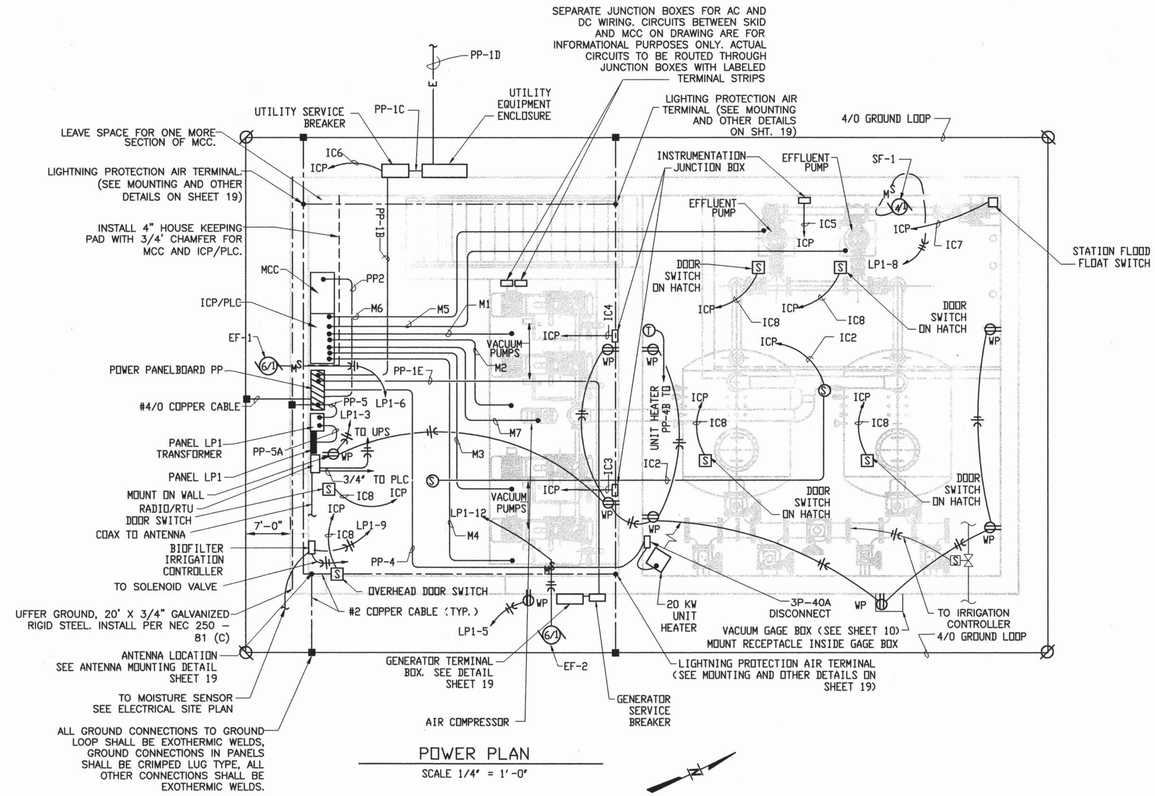

POWER PLAN

SCALE 1/4" = 1'-0"

LIGHTING FIXTURE SCHEDULE				
SYMBOL	LAMP	MOUNTING HEIGHT	DESCRIPTION	MANUFACTURER MODEL NO.
1	F32T8-CW	PENDANT AS NOTED	2-LAMP, 120V, HEAVY DUTY INDUSTRIAL FLUORESCENT, 10% UPLIGHT, RAPID START, ENERGY SAVING BALLAST, PORCELAIN REFLECTOR, PROVIDE WIRE GUARDS.	DAY-BRITE FL-1024-4U
2A PE	70W, HPS	12' ALUMINUM SQUARE, NON-TAPERED POLE	120V, HIGH PRESSURE SODIUM, SHARP CUTOFF LUMINAIRE DARK BRONZE ANODIZED FINISH,	KIM/EKG401/70HPS 120/DB-A (NOTE 1)
2 PE	70W, HPS	WALL AS NOTED	120V, HIGH PRESSURE SODIUM, SHARP CUTOFF LUMINAIRE DARK BRONZE ANODIZED FINISH, PROVIDE PHOTOCELL RECEPTACLE WITH NEMA BASE PHOTOCELL, LEXAN SHIELD.	KIM/EKG401/70HPS 120/DB-A/A-25
	8 WATT HALOGEN	WALL 8'-0" AFF	MAINTENANCE FREE LEAD CALCIUM BATTERY, EMERGENCY LIGHT COMPLYING WITH NEMA 4X AND NEMA 12 RATINGS. 12V OUTPUT 120V POWER SUPPLY.	EXIDE/LIGHTGUARD LTC125XW2ACF1

NOTE:
1. PROVIDE BREAKOVER POLE, KW INDUSTRIES THSP-30-6.25-11-P-DM-BC ARROW INDICATES DIRECTION THE POLE SHALL BREAK FOR LOWERING.

PANELBOARD LP1 - ESTIMATED MAXIMUM DEMAND = 10.7 KVA SURFACE MOUNTED, 3 PHASE, 4W, 120/208V, 50A MAIN C/B, AIC MIN. =10,000A																
						KVA										
LOAD	LTG	REC	BKR	CKT	PH	A		B		C		CKT	BKR	LTG	REC	LOAD
INDOOR	X		20	1	A	.60						2	20			SPACE
INDOOR		X	20 *	3	B			1.08	.50			4	20	X		OUTSIDE LIGHTS
OUTDOOR		X	20 *	5	C					.36	.53	6	15			EF-1
SPARE			20	7	A	.70	.70					8	15			SF-1
IRRIGATION			20	9	B			.20	1.18			10	20			COMPRESSOR
SPARE			20	11	C					.50	.53	12	20			EF-2
SPARE			20	13	A	.50						14				SPACE
SPARE			20	15	B			.50				16				SPACE
SPARE			20	17	C					.50		18				SPACE
TOTAL KVA						2.30		3.46		2.42						

*GFI BREAKER

AS-BUILT INFORMATION
CONTRACTOR TRIAD BUILDERS OF NM DATE 11/99
WORK STAKED BY TRIAD DATE
INSPECTOR'S ACCEPTANCE BY WILSON & CO. DATE 3/00
FIELD VERIFICATION BY DATE
DRAWINGS CORRECTED BY WILSON & CO. DATE 9/00
MICRO-FILM INFORMATION DATE
RECORDED BY
NO. DATE

BENCH MARKS

SURVEY INFORMATION
FIELD NOTES
NO. BY DATE

ENGINEER'S SEAL
JOHN N. HARRELL NEW MEXICO 11779 REGISTERED PROFESSIONAL ENGINEER 4/7/99

NO.	DATE	REVISIONS	BY
1	9/3/99	RELOCATION PUMP STATION REMARKS	RJP

WILSON & COMPANY, ENGINEERS & ARCHITECTS
DESIGNED BY JNH DATE 2/22/99
DRAWN BY PAS DATE 2/22/99
CHECKED BY JNH DATE 2/22/99

CITY PROJECT #567292

COUNTY OF BERNALILLO
ENVIRONMENTAL HEALTH AND
PUBLIC WORKS DEPARTMENTS

BERNALILLO COUNTY STATE OF NEW MEXICO

NORTH VALLEY AREAS B AND F
VACUUM STATION

POWER & LIGHTING PLAN
BELOW AND AT GRADE LEVEL

PROJECT NO. 96034

SHEET 17 OF 19

WILSON & COMPANY

X:\PUBLIC\PROJECTS\96034\DRAWINGS\VACSTA\6034vs17-9-1-99

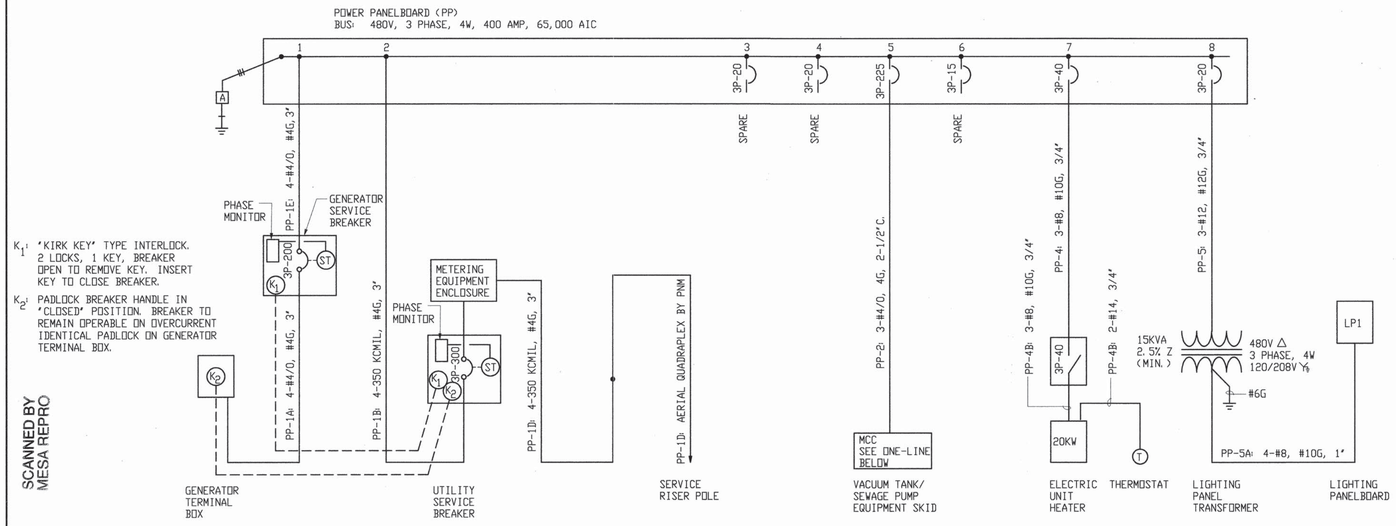

K_1: 'KIRK KEY' TYPE INTERLOCK. 2 LOCKS, 1 KEY, BREAKER OPEN TO REMOVE KEY. INSERT KEY TO CLOSE BREAKER.

K_2: PADLOCK BREAKER HANDLE IN 'CLOSED' POSITION. BREAKER TO REMAIN OPERABLE ON OVERCURRENT IDENTICAL PADLOCK ON GENERATOR TERMINAL BOX.

SCANNED BY MESA REPRO

ONE-LINE DIAGRAM

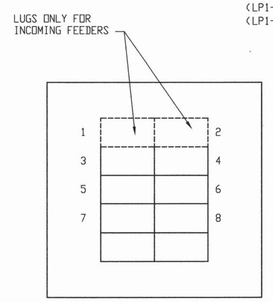

POWER PANELBOARD (PP) BREAKER POSITION

NOT TO SCALE

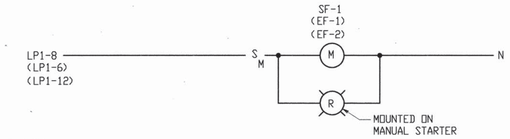

SF-1 CONTROL DIAGRAM

(TYPICAL FOR EF-1 AND EF-2)

NOTE:
FANS ARE TO RUN CONTINUOUSLY

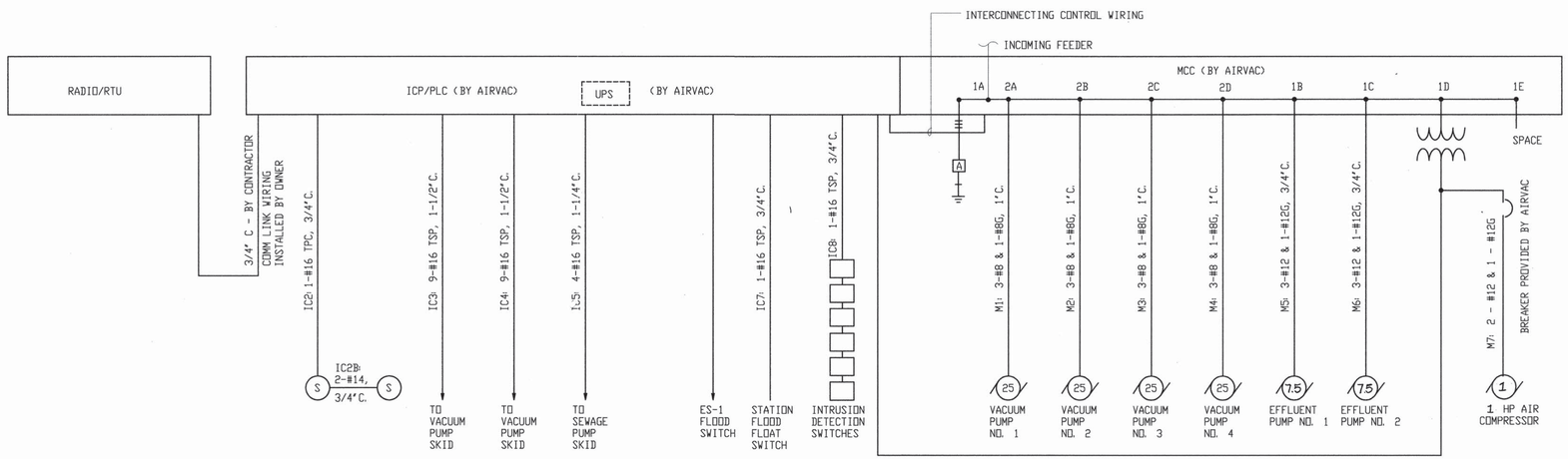

NOTE: WIRING OF EQUIPMENT ON VACUUM/SEWAGE PUMP SKID BY AIRVAC. SEE AIRVAC DRAWING FOR DETAILED WIRING.

MISCELLANEOUS ONE-LINE DIAGRAMS

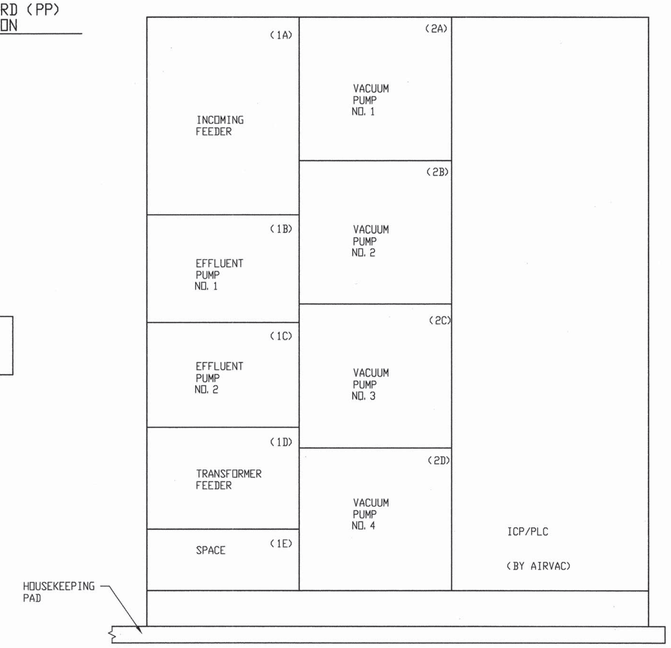

MCC - ELEVATION

NOT TO SCALE

NOTE: PAD SHALL EXTEND 2" BEYOND EDGE OF EQUIPMENT

AS-BUILT INFORMATION

CONTRACTOR TRIAD BUILDERS OF NM
WORK STAKED BY TRIAD DATE 11/99
INSPECTED BY DATE
ACCEPTANCE BY WILSON & CO. DATE 3/00
FIELD VERIFICATION BY DATE
DRAWINGS CORRECTED BY WILSON & CO. DATE 3/00
MICRO-FILM INFORMATION
RECORDED BY DATE
NO.

BENCH MARKS

SURVEY INFORMATION

FIELD NOTES

NO.	BY	DATE

ENGINEER'S SEAL

JOHN T. HARGRILL NEW MEXICO 11719 PROFESSIONAL ENGINEER REGISTERED

NO.	DATE	REMARKS	BY

REVISIONS

WILSON & COMPANY, ENGINEERS & ARCHITECTS

		DATE
DESIGNED BY	J.H.	2/22/99
DRAWN BY	P.R.D.	2/22/99
CHECKED BY	R.J.P.	2/22/99

CITY PROJECT #567292

COUNTY OF BERNALILLO
ENVIRONMENTAL HEALTH AND
PUBLIC WORKS DEPARTMENTS

BERNALILLO COUNTY STATE OF NEW MEXICO

NORTH VALLEY AREAS B AND F
VACUUM STATION

ONE LINE DIAGRAMS

PROJECT NO. 96034

SHEET 18 OF 19

WILSON & COMPANY

X:\PUBLIC\PROJECTS\96034\DRAWINGS\VACSTA\96034VS18.DWG

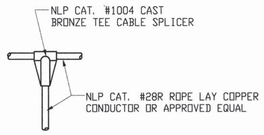

TYPICAL TEE CABLE SPLICE

NOT TO SCALE

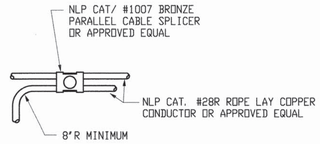

TYPICAL CABLE SPLICE DETAIL

NOT TO SCALE

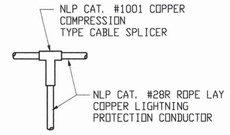

TYPICAL TEE CABLE SPLICE DETAIL

NOT TO SCALE

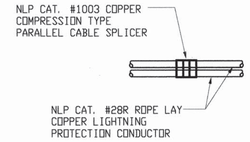

TYPICAL PARALLEL CABLE SPLICE DETAIL

NOT TO SCALE

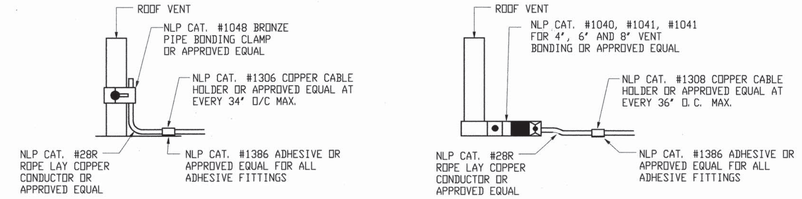

TYPICAL ROOF VENT BONDING DETAIL

NOT TO SCALE

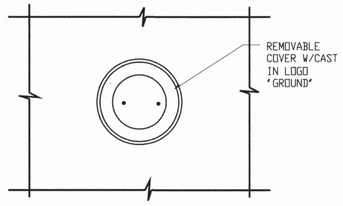

PLAN

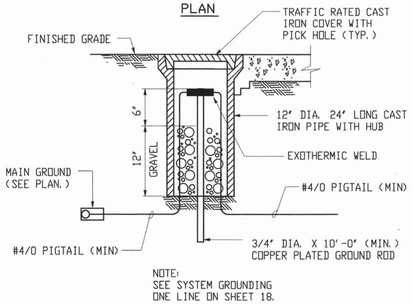

NOTE:
SEE SYSTEM GROUNDING
ONE LINE ON SHEET 18.

SECTION

ELECTRICAL GROUND WELL DETAIL

NOT TO SCALE
(PROVIDE AT EACH GROUND ROD LOCATION)

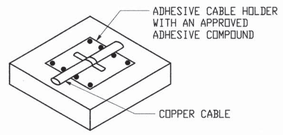

TYPICAL ADHESIVE CABLE HOLDER

NOT TO SCALE

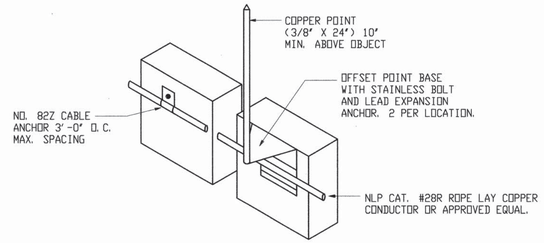

TYPICAL OFFSET AIR TERMINAL

NOT TO SCALE

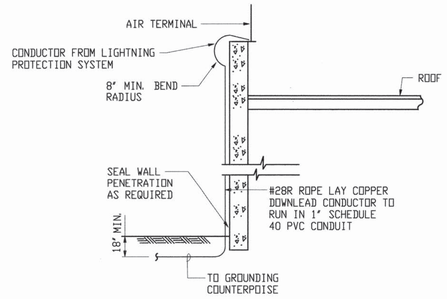

TYPICAL DOWNLEAD DETAIL

NOT TO SCALE

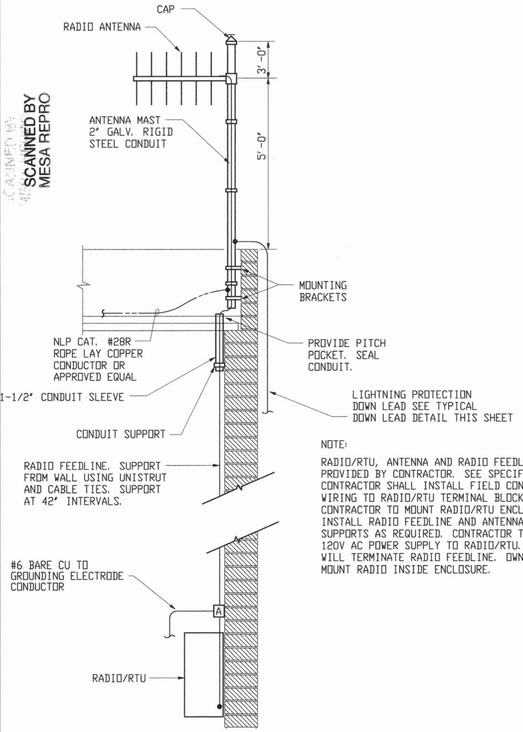

NOTE:
RADIO/RTU, ANTENNA AND RADIO FEEDLINE TO BE PROVIDED BY CONTRACTOR. SEE SPECIFICATIONS. CONTRACTOR SHALL INSTALL FIELD CONTROL WIRING TO RADIO/RTU TERMINAL BLOCK. CONTRACTOR TO MOUNT RADIO/RTU ENCLOSURE, INSTALL RADIO FEEDLINE AND ANTENNA PLUS SUPPORTS AS REQUIRED. CONTRACTOR TO PROVIDE 120V AC POWER SUPPLY TO RADIO/RTU. OWNER WILL TERMINATE RADIO FEEDLINE. OWNER WILL MOUNT RADIO INSIDE ENCLOSURE.

ANTENNA MOUNTING DETAIL

NOT TO SCALE

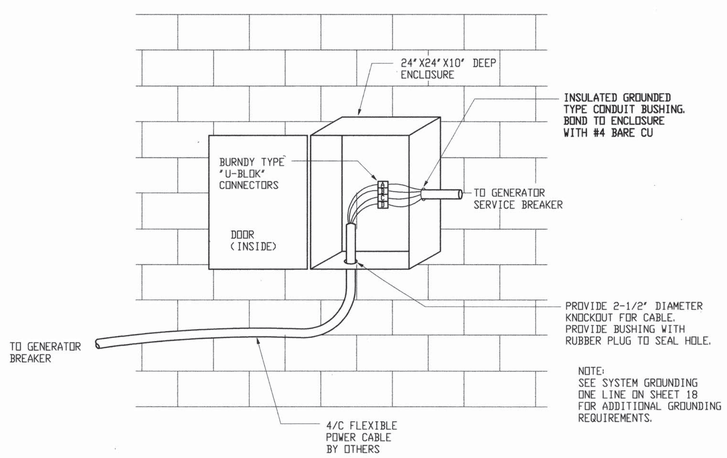

NOTE:
SEE SYSTEM GROUNDING
ONE LINE ON SHEET 18
FOR ADDITIONAL GROUNDING
REQUIREMENTS.

GENERATOR TERMINAL BOX CONNECTION DETAIL

NOT TO SCALE

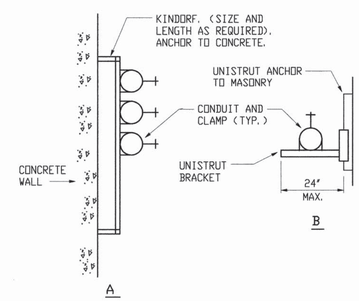

CONDUIT SUPPORT FROM WALL

NOT TO SCALE

GENERAL NOTES ON LIGHTNING PROTECTION

1. DEVICE AND COMPONENT NUMBERS CALLED OUT ARE SPECIFIC TO NATIONAL LIGHTNING PROTECTION CORPORATION, UNLESS OTHERWISE NOTED.
2. SEE SPECIFICATIONS FOR ADDITIONAL REQUIREMENTS.
3. CONDUCTOR BEND SHALL NOT FORM A SHARPER ANGLE THAN 90 DEGREES OR HAVE A RADIUS LESS THAN 8 INCHES.
4. METAL BODIES OF INDUCTANCE LOCATED WITHIN 6' OF MAIN LIGHTNING CONDUCTORS SHALL BE BONDED TO THE LIGHTNING PROTECTION SYSTEMS.
5. CONNECTIONS TO GROUND AND COUNTERPOISE SHALL BE MADE AT A POINT NOT LESS THAN 2'-0" BELOW GRADE, AND 3'-0" AWAY FROM FOUNDATION WALL.
6. JOB CONDITIONS MAY DICTATE SLIGHT VARIATIONS IN AIR TERMINAL AND GROUND LOOP LOCATIONS.
7. CONDUCTORS SHALL MAINTAIN A HORIZONTAL OR DOWNWARD PATH FREE FROM "U" AND "V" POCKETS. ANY RISE IN HORIZONTAL CONDUCTOR SHALL NOT EXCEED 6 INCHES.
8. AIR TERMINAL SHALL BE PLACED AT THE LOCATIONS INDICATED. NOT MORE THAN 2'-0" FROM THE ENDS OF RIDGES, OUTSIDE CORNERS OR OUTSIDE EDGES OF MAIN ROOFS AND MUST EXTEND A MINIMUM OF 10" ABOVE THE OBJECT TO BE PROTECTED.
9. COPPER LIGHTNING PROTECTION MATERIALS SHALL NOT BE PLACED ON ALUMINUM SURFACES, NOR SHALL ALUMINUM MATERIALS BE PLACED ON COPPER SURFACES.
10. ALL STRUCTURAL STEEL SHALL BE MADE ELECTRICALLY CONTINUOUS THROUGH CONSTRUCTION.
11. ELECTRIC AND ANTENNA SYSTEM GROUNDS SHALL BE CONNECTED WITH #4/0 COPPER CONDUCTOR TO ONE LIGHTNING PROTECTION GROUND.
12. A LIGHTNING ARRESTOR, PROTECTOR OR ANTENNA-DISCHARGE UNIT MUST BE INSTALLED ON EACH ELECTRIC SERVICE ENTRANCE AND RADIO ANTENNA LEAD IN.
13. THE GENERAL CONTRACTOR IS RESPONSIBLE FOR MAKING ALL REBAR ELECTRICALLY CONTINUOUS.
14. ALL ADHESIVE FIXTURES SHALL BE SET WITH AN ADHESIVE COMPOUND COMPATIBLE WITH THE ROOFING MATERIAL. ADHESIVES SHALL BE APPROVED IN ADVANCE BY THE ROOFING CONTRACTOR.
15. SEAL THE ENDS OF CONDUIT MOISTURE TIGHT WITH DUCT SEAL, SILICONE OR LEAD WEDGES.
16. ALL EXOTHERMIC WELDS MUST BE INSPECTED BY THE OWNER'S REPRESENTATIVE OR THE INSPECTOR AND THE ENGINEER.

CITY PROJECT #567292

AS-BUILT INFORMATION
CONTRACTOR TRIAD BUILDERS OF NM
WORK STAKED BY TRIAD DATE 4/99
WORK INSPECTED BY WILSON & CO. DATE 5/00
ACCEPTANCE BY WILSON & CO. DATE 9/00
FIELD VERIFICATION BY DATE
FIELD LOCATION BY DATE
DRAWINGS CORRECTED BY WILSON & CO. DATE 9/00
MICRO-FILM INFORMATION
RECORDED BY DATE
NO.

BENCH MARKS

SURVEY INFORMATION
FIELD NOTES

NO.	BY	DATE

ENGINEER'S SEAL

JOHN N. HARDELL
NEW MEXICO
11719
REGISTERED PROFESSIONAL ENGINEER

NO.	DATE	REMARKS	BY

REVISIONS

WILSON & COMPANY, ENGINEERS & ARCHITECTS

		DATE
DESIGNED BY	J.H.	2/22/99
DRAWN BY	P.R.D.	2/22/99
CHECKED BY	R.J.P.	2/22/99

COUNTY OF BERNALILLO
ENVIRONMENTAL HEALTH AND
PUBLIC WORKS DEPARTMENTS

BERNALILLO COUNTY
STATE OF NEW MEXICO

NORTH VALLEY AREAS B AND F
VACUUM STATION

ELECTRICAL - DETAILS

PROJECT NO. 96034

SHEET 19 OF 19

WILSON & COMPANY

X:\PUBLIC\PROJECTS\96034\DRAWINGS\VACSTA\96034VS19.DWG

P:\DC\ALBUQRQU\ELECTRIC\AREAB_F\B_FPOW

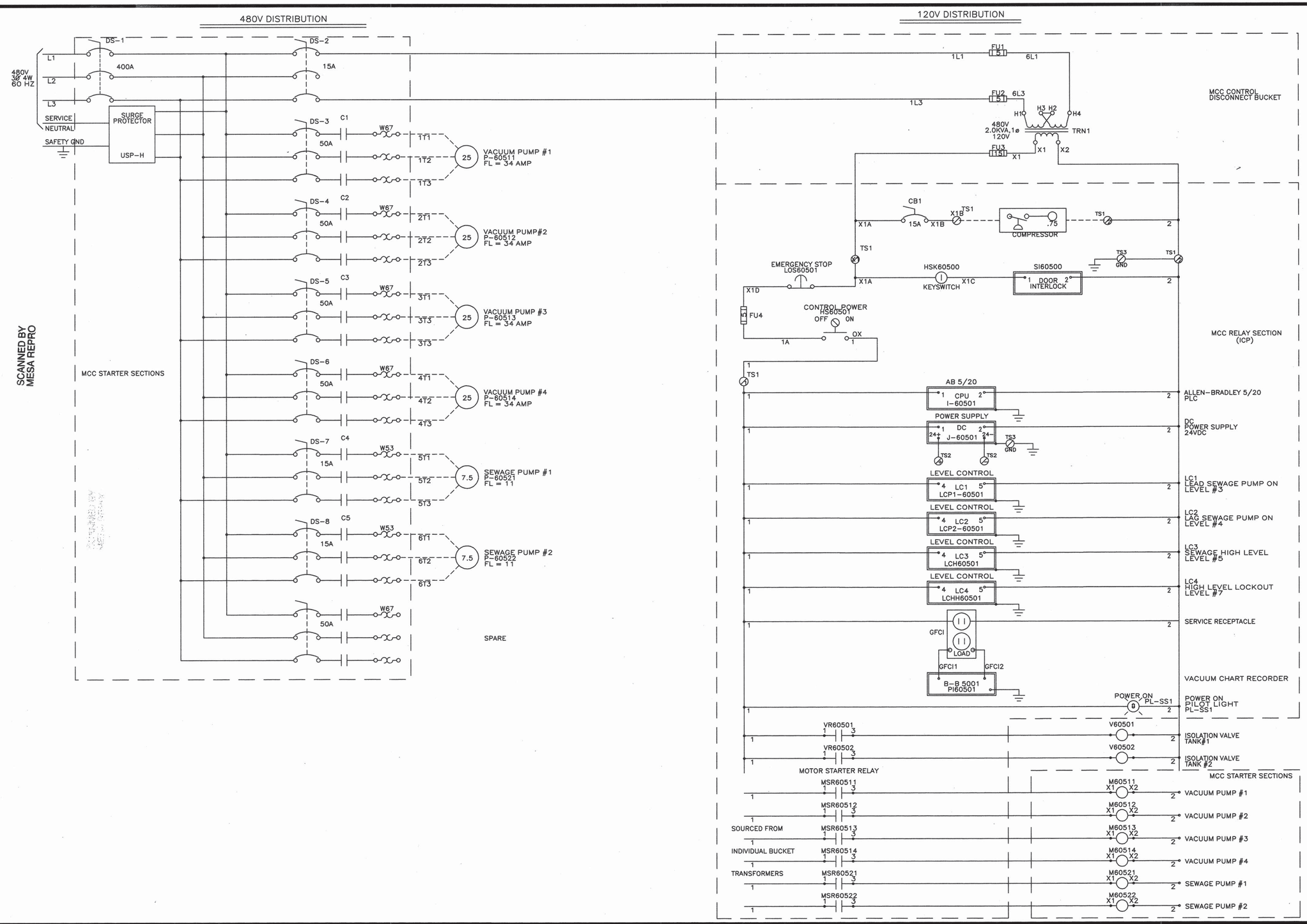

WILSON PROJECT NUMBER
96-210-034
CITY PROJECT NUMBER
567292

SHEET-20

AIRVAC®

VACUUM SEWER SYSTEMS

AIRVAC, INC.
P.O. BOX 528, 4217 N. OLD U.S. 31, ROCHESTER, INDIANA 46975 U.S.A.
TELEPHONE (219) 223-3980
FAX (219) 223-5566

The Viable Alternative®

NO.	REVISIONS	DATE
	AS BUILT	11/30/99

TITLE: POWER DISTRIBUTION

CLIENT: AREA B&F: ALBUQUERQUE, NM

DRAWN BY	DATE	SCALE	DRAWING NO.
RJB	06-21-99		PJ99-122

DESIGN BY

FILE: P:\DC\ALBUQRQU\AREA B_F\ELECTRIC\B_FI/O

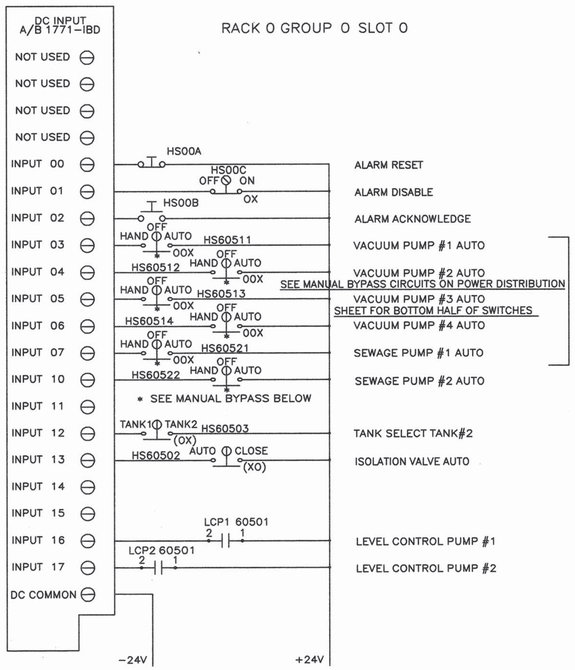

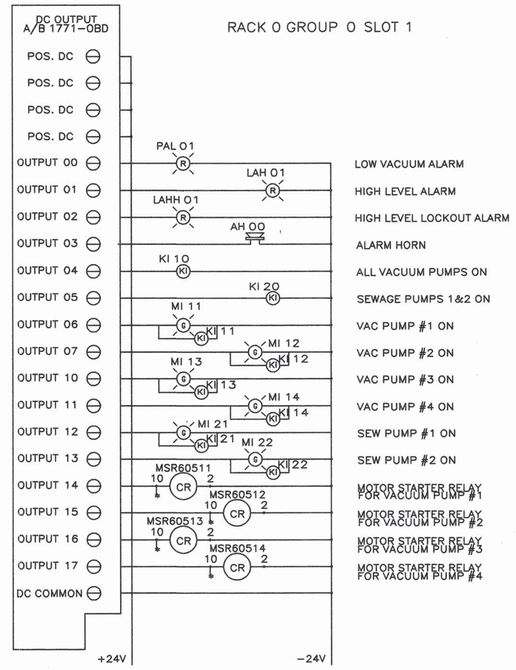

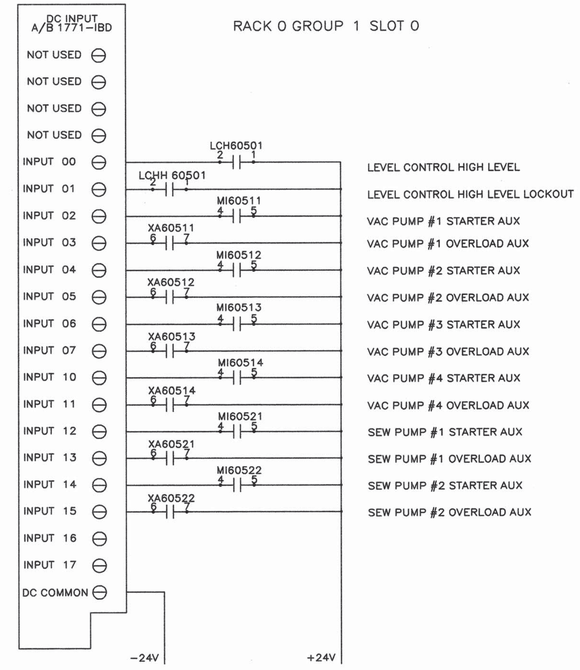

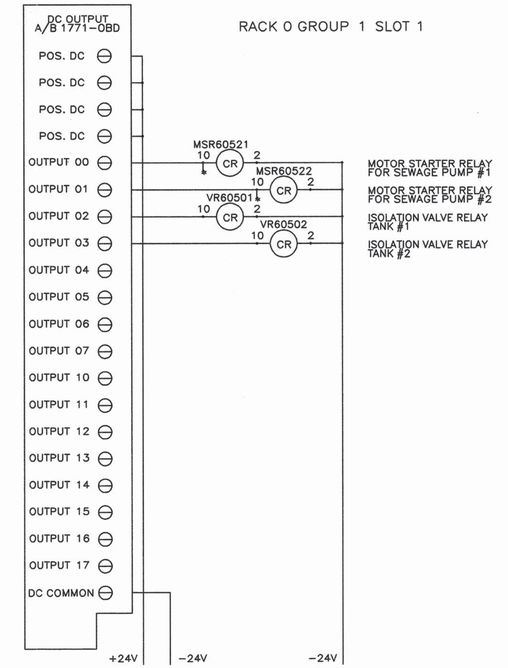

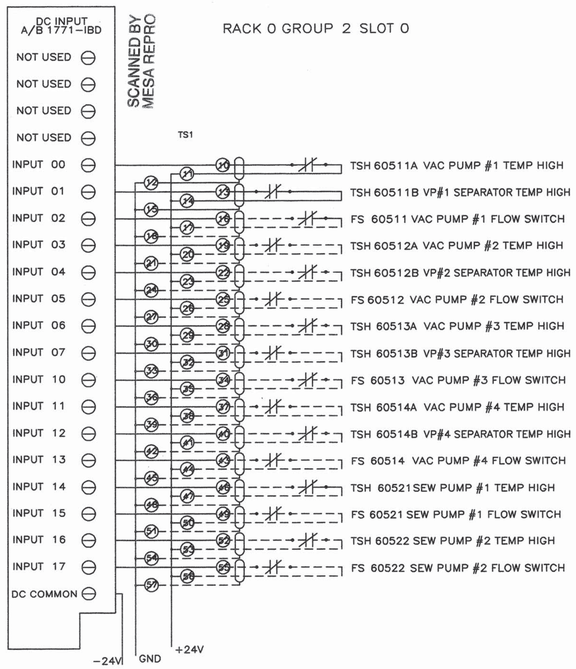

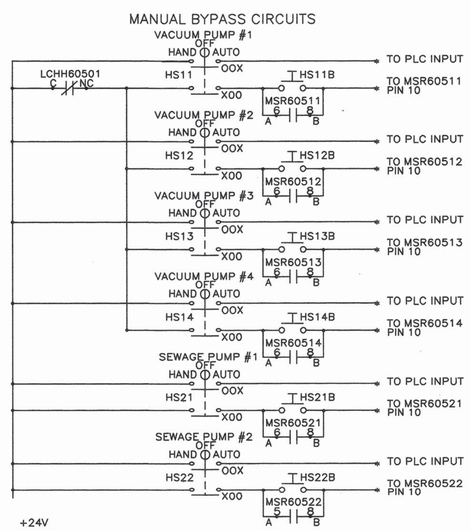

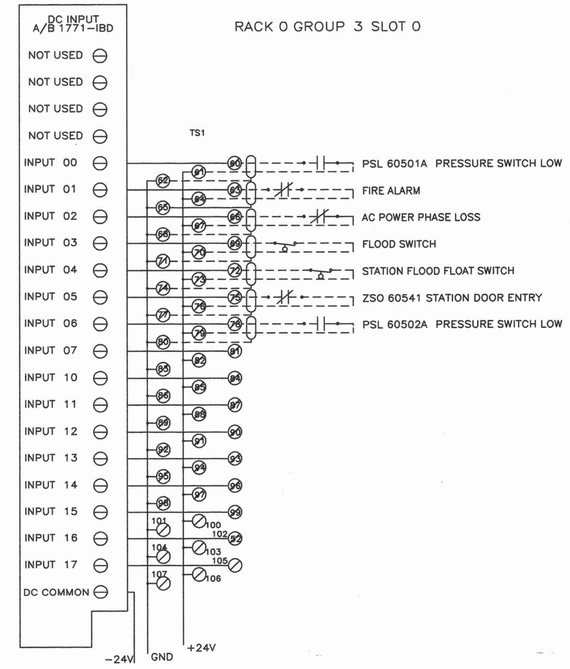

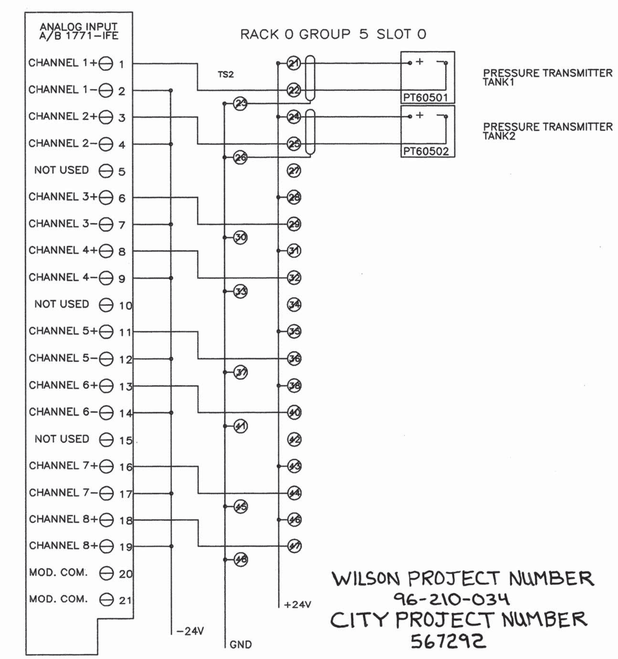

WILSON PROJECT NUMBER
96-210-034
CITY PROJECT NUMBER
567292

SHEET-21

---------- DENOTES FIELD WIRING

AIRVAC®

VACUUM SEWER SYSTEMS

AIRVAC, INC.
P.O. BOX 528, 4217 N. OLD U.S. 31, ROCHESTER, INDIANA 46975 U.S.A.
TELEPHONE (219) 223-3980
FAX (219) 223-5566

The Viable Alternative®

NO.	REVISIONS	DATE
	AS BUILT	11/30/99

TITLE: I/O LAYOUT

CLIENT: AREA B&F: ALBUQUERQUE, NM

DRAWN BY: RJB
DESIGN BY:
DATE: 06-21-99
COPYRIGHT © AIRVAC ®
SCALE:
DRAWING NO.: PJ99-123

FILE: P:\DC\ALBUQRQU\AREA B_F\ELECTRIC/B_FMAT

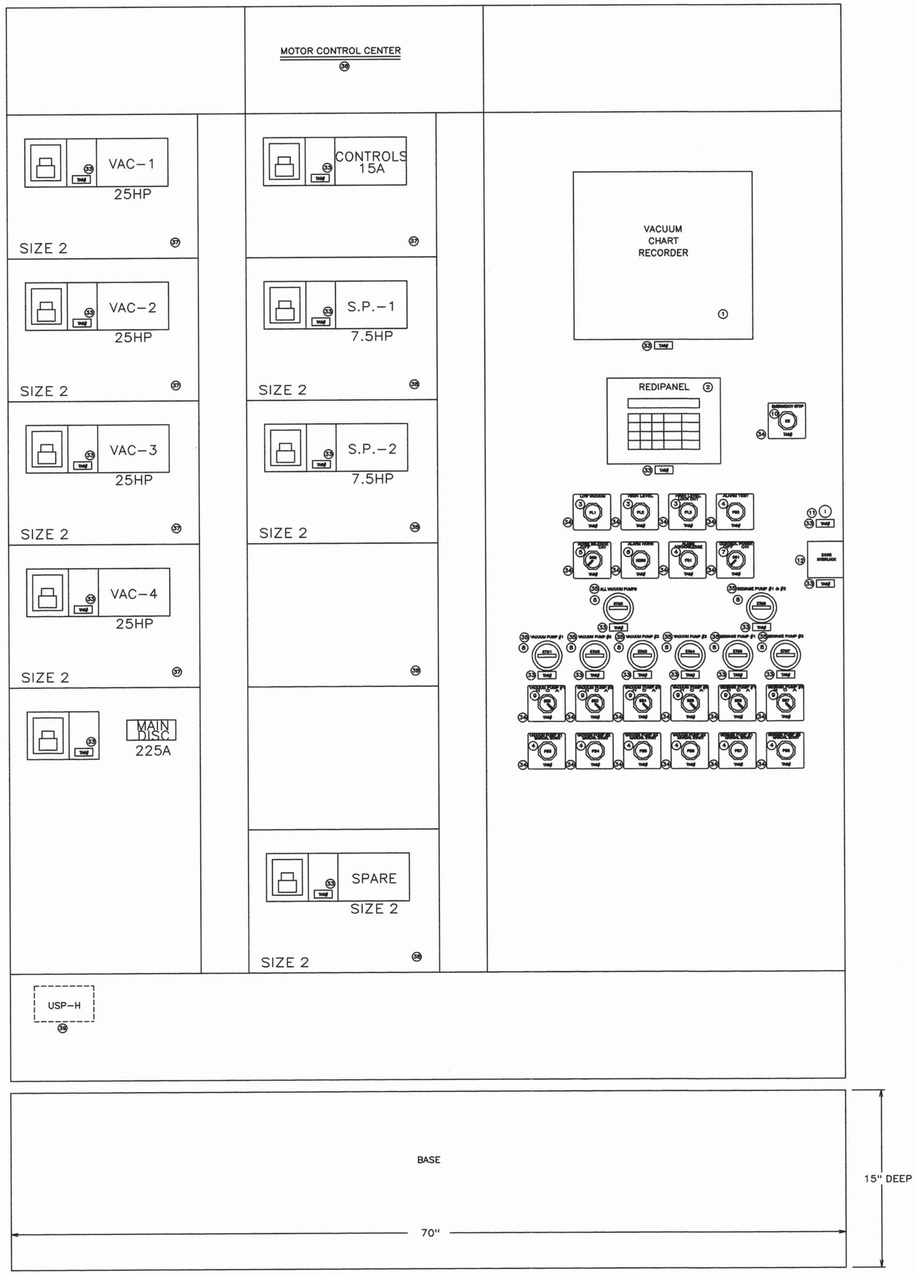

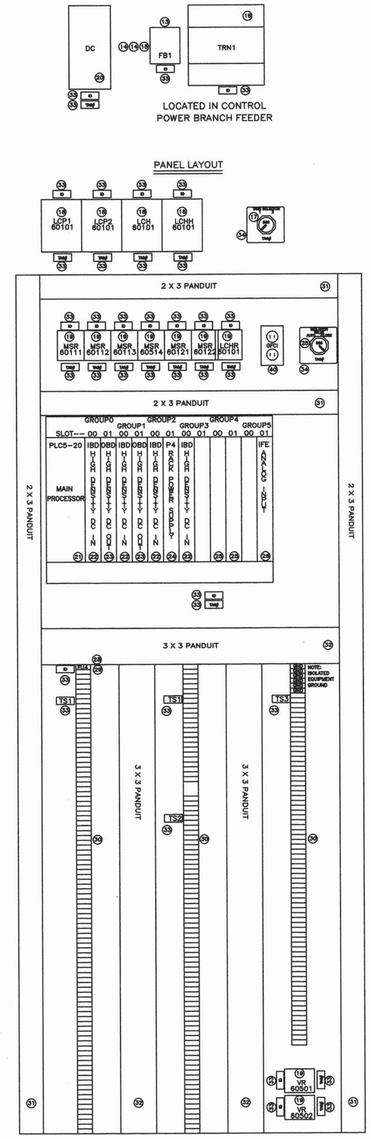

SCANNED BY MESA REPRO

BILL OF MATERIAL

ITEM	QTY	UNIT	LOCH	PART NUMBER	DESCRIPTION	MANUFACTURER	REMARKS
1	1	EA	P	5001-10A-171-001 -323-412-000	VACUUM CHART RECORDER	BRISTOL-BABCOCK	
2	1	EA	P	2705-K11C1	OPERATOR INTERFACE	ALLEN BRADLEY	
3	3	EA	P	800T-Q24LR	PILOT LIGHT, RED	ALLEN BRADLEY	
4	10	EA	P	800T-A2B	PUSHBUTTON, MOMENTARY	ALLEN BRADLEY	
5	1	EA	P	800T-H2A	SELECTOR SWITCH, 2 POSITION	ALLEN BRADLEY	
6	1	EA	P	SC628ANP	ALARM HORN	MALLORY	
7	1	EA	P	800T-16HRL2KB6AX	SELECTOR SWITCH, GREEN, ILL	ALLEN BRADLEY	
8	7	EA	P	779565-216	ELAPSED TIME METER	VEEDER-ROOT	
9	6	EA	P	800T-24JGL2KB7AX	SELECTOR SWITCH, 3 POS	ALLEN BRADLEY	
10	1	EA	P	800T-FX6A5	EMERGENCY STOP, MUSHROOM	ALLEN BRADLEY	
	1	EA	P	800T-N314	PADLOCKING ATTACHMENT	ALLEN BRADLEY	
11	1	EA	P	A-EKDF	KEYSWITCH	HOFFMAN	
12	1	EA	P	A-EK115NDH	DOOR INTERLOCK	HOFFMAN	
13	1	EA	B	BM6033PQ	FUSE BLOCK	BUSSMAN	
14	2	EA	B	FNQ-R-5	FUSE	BUSSMAN	
15	1	EA	B	FNM 15	FUSE	BUSSMAN	
16	1	EA	B	50-2000-053	CONTROL TRANSFORMER	DONGAN	
17	1	EA	B	800T-H5D1	SELECTOR SW. 2POS SPR FR RT	ALLEN BRADLEY	
18	4	EA	B	27A1E0	LEVEL CONTROL	WARRICK	
19	7	EA	B	KRPA14DN-24	CONTROL RELAY	POTTER&BRUMFIELD	
	7	EA	B	27E891	SOCKET	POTTER&BRUMFIELD	
20	20	EA	B	W115D	POWER SUPPLY, 24VDC	DELTRON	
21	1	EA	B	1785-L20B	5/20 CPU	ALLEN BRADLEY	
22	4	EA	B	1771-IBD	DIGITAL INPUT MODULE	ALLEN BRADLEY	
23	2	EA	B	1771-OBD	DIGITAL OUTPUT MODULE	ALLEN BRADLEY	
24	1	EA	B	1771-P4S	POWER SUPPLY	ALLEN BRADLEY	
25	1	EA	B	9001-KS11B	GANG SWITCH	SQUARE D	
26	1	EA	B	1771-IFE	ANALOG INPUT MODULE	ALLEN BRADLEY	
27	1	EA	B	1771-A3B1	MOUNTING RACK	ALLEN BRADLEY	
28	1	EA	B	1492-H6	FUSED TERMINAL BLOCK	ALLEN BRADLEY	
29	1	EA	B	MDA5	FUSE	BUSSMAN	
30	300	EA	B	1492-F8	TERMINAL BLOCKS	ALLEN BRADLEY	
31	16	FT	B	E2X3WH6	PLASTIC WIREWAY /W COVER	PANDUIT	
				C2WH6		PANDUIT	
32	10	FT	B	E3X3WH6	PLASTIC WIREWAY /W COVER	PANDUIT	
				C3WH6		PANDUIT	
33	47	EA	P/B	N/A	PHENOLIC NAMEPLATE (5/8" X 1 1/4") BLACK WITH WHITE LETTERS LINE: TAG# OR NAME	SS&E ENTERPRISES	
34	23	EA	P	N/A	PHENOLIC NAMEPLATE (2 1/8" X 2 1/2") BLACK WITH WHITE LETTERS LINE 1: SERVICE DESCRIPTION LINE 2: CONT'D, IF NEEDED LINE 3: TAG #	SS&E ENTERPRISES	
35	7	EA	P	N/A	PHENOLIC NAMEPLATE (5/8" X 3") BLACK WITH WHITE LETTERS LINE 1: SERVICE DESCRIPTION	SS&E ENTERPRISES	
36	1	EA		SERIES 2100	MOTOR CONTROL CENTER WITH 4 – 25HP STARTERS, 2 – 7 1/2HP STARTERS 1 – 30" RELAY SECTION	ALLEN BRADLEY	
37	9	EA	B	W67	OVERLOAD ELEMENTS	ALLEN BRADLEY	
38	6	EA	B	W53	OVERLOAD ELEMENTS	ALLEN BRADLEY	
39	1	EA	B	USPS-H-277/480-3P5W	SURGE SUPPRESSOR	LEA INTERNATIONAL	
40	1	EA	B	6599	GROUND FAULT RECEPTACLE	LEVITON	
SPARES:							
	2	EA	B	FNQ-R-5	FUSE	BUSSMAN	
	1	EA	B	FNM 10	FUSE	BUSSMAN	
	2	EA	B	MDA5	FUSE	BUSSMAN	
	3	EA	P	800T-N157	REPLACEMENT BULB	ALLEN BRADLEY	
	1	EA	P	800T-24JG2KB7AX	SELECTOR SWITCH, 3 POS	ALLEN BRADLEY	
	1	EA	P	800T-H2A	SELECTOR SWITCH, 2 POSITION	ALLEN BRADLEY	
	1	EA	P	800T-A2B	PUSHBUTTON, MOMENTARY	ALLEN BRADLEY	
	3	EA	P	800T-XA	CONTACT BLOCK	ALLEN BRADLEY	
	1	EA	P	779565-206	ELAPSED TIME METER	VEEDER ROOT	
	3	EA	B	W67	OVERLOAD ELEMENTS	WESTINGHOUSE	
	3	EA	B	W53	OVERLOAD ELEMENTS	WESTINGHOUSE	

WILSON PROJECT NUMBER
96-210-034
CITY PROJECT NUMBER
567292

SHEET-22

AIRVAC, INC.
P.O. BOX 528, 4217 N. OLD U.S. 31, ROCHESTER, INDIANA 46975 U.S.A.
TELEPHONE (219) 223-3980
FAX (219) 223-5566

The Viable Alternative®

NO.	REVISIONS	DATE
	AS BUILT	12-01-99

TITLE: MATERIAL LIST

CLIENT: AREA B&F: ALBUQUERQUE, NM

DRAWN BY / DESIGN BY

DATE: 06-21-99 COPYRIGHT © AIRVAC ®

SCALE

DRAWING NO.: PJ99-124

LEVEL CONTROL WIRING

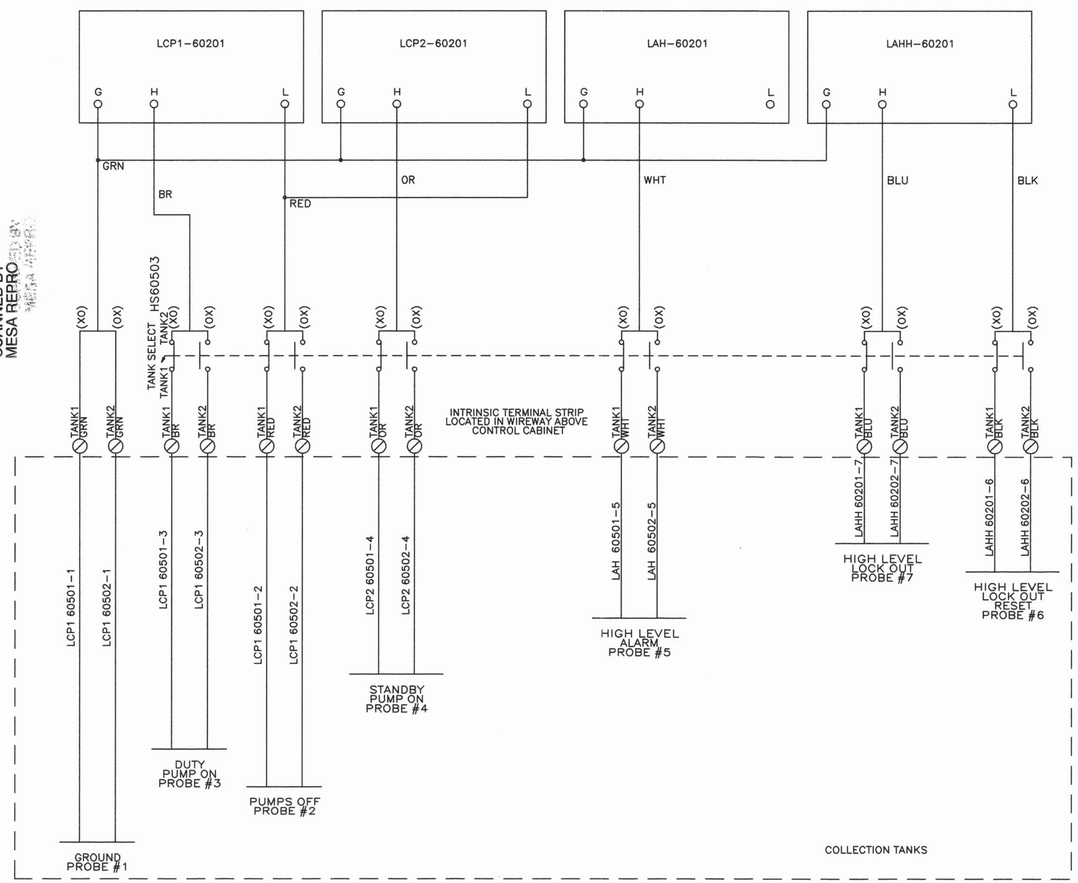

POINT TO POINT WIRING

CONTROL PANEL	FIELD JUNCTION BOX	SEWAGE PUMP JB'S	COLLECTION TANK JB'S	VACUUM PUMP #1	VACUUM PUMP #2	VACUUM PUMP #3	VACUUM PUMP #4	SEWAGE PUMP #1	SEWAGE PUMP #2	COMPRESSOR	VACUUM SWITCH VS1	STATION STATUS	VACUUM TRANSMITTER	LEVEL PROBES
1T1	1T1			1T1										
1T2	1T2			1T2										
1T3	1T3			1T3										
2T1	2T1				2T1									
2T2	2T2				2T2									
2T3	2T3				2T3									
3T1	3T1					3T1								
3T2	3T2					3T2								
3T3	3T3					3T3								
4T1	4T1						4T1							
4T2	4T2						4T2							
4T3	4T3						4T3							
5T1		5T1						5T1						
5T2		5T2						5T2						
5T3		5T3						5T3						
		6T1							6T1					
		5T2							5T2					
		5T3							5T3					
GND	GND	GND		GND	GND	GND	GND	GND	GND					
TS1														
2										2				
X1B										X1B				
10-18	10-18			10-18										
19-27	19-27				19-27									
28-36	28-36					28-36								
37-45	37-45						37-45							
46-51	46-51							46-51						
52-57	52-57								52-57					
60											60			
61											61			
62											62			
63-77												63-77		
TS2														
21-26			21-26										21-26	
TS3														
INTRINSIC TERMINALS			INTRINSIC TERMINALS											INTRINSIC TERMINALS

WILSON PROJECT NUMBER
96-210-034
CITY PROJECT NUMBER
567292

SHEET-23

AIRVAC, INC.
P.O. BOX 528, 4217 N. OLD U.S. 31, ROCHESTER, INDIANA 46975 U.S.A.
TELEPHONE (219) 223-3980
FAX (219) 223-5566

The Viable Alternative®

NO.	REVISIONS	DATE
	AS BUILT	12-01-99

TITLE: FIELD WIRING POINT TO POINT

CLIENT: AREA B&F: ALBUQUERQUE, NM

DRAWN BY: RJB | DATE: 06-21-99 | SCALE: | DRAWING NO.: PJ99-125

DESIGN BY:

FILE: P:\DC\ALBUQRQU\AREAB_F\ELECTRIC\B_FPID

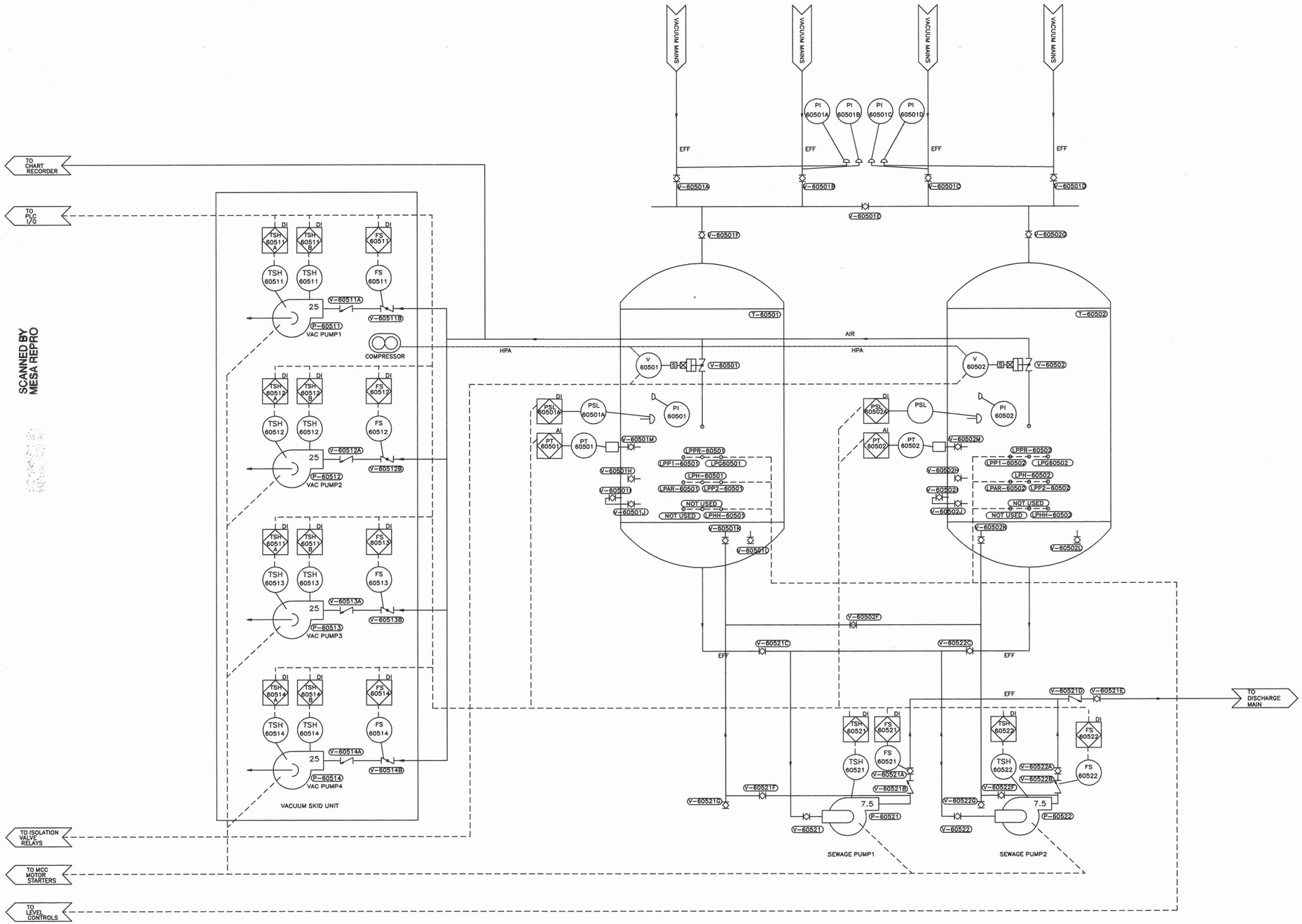

AI= ANALOG INPUT
AH= ALARM HORN
DI= DIGITAL INPUT
DO= DIGITAL OUTPUT
EFF= SEWAGE EFFLUENT
FS= FLOW SWITCH
HPA= HIGH PRESSURE AIR
HS= HAND SWITCH
HSK= HAND SWITCH KEYED
I= PLC
IO= CONTROLLER OPERATOR INTERFACE
J= POWER SUPPLY
KI= ELAPSED TIME METER
LCP1= LEVEL CONTROL PUMP1
LCP2= LEVEL CONTROL PUMP 2
LCH= LEVEL CONTROL HIGH
LCHH= LEVEL CONTROL HIGH HIGH
LCHR= LEVEL CONTROL HIGH RELAY
LAH= LEVEL ALARM HIGH
LAHH= LEVEL ALARM HIGH HIGH
LOS= LOCK OUT STOP
LPG= LEVEL PROBE GROUND
LPPR= LEVEL PROBE PUMP RESET
LPP1= LEVEL PROBE PUMP 1
LPP2= LEVEL PROBE PUMP 2
LPH= LEVEL PROBE HIGH LEVEL
LPAR= LEVEL PROBE HIGH ALARM RESET
LPHH= LEVEL PROBE HIGH HIGH
M= MOTOR STARTER
MI= MOTOR STARTER AUXILIARY (RUN INDICATION)
XA= MOTOR STARTER OVERLOAD AUX
MSR= MOTOR STARTER RELAY
P= PUMP
PAL= PRESSURE ALARM LOW
PBT= PUSHBUTTON TEST
PBAA= PUSHBUTTON ALARM ACKNOWLEDGE
PI= PRESSURE INDICATOR
PSL= PRESSURE SWITCH LOW
PT= PRESSURE TRANSMITTER
SI= SAFETY INTERLOCK
T= TANK
TSH= TEMPERATURE SWITCH HIGH
V= VALVE

SCANNED BY MESA REPRO

WILSON PROJECT NUMBER
96-210-034
CITY PROJECT NUMBER
567292

SHEET-24

AIRVAC®
VACUUM SEWER SYSTEMS

AIRVAC, INC.
P.O. BOX 528, 4217 N. OLD U.S. 31, ROCHESTER, INDIANA 46975 U.S.A.
TELEPHONE (219) 223-3980
FAX (219) 223-5566

The Viable Alternative®

NO.	REVISIONS	DATE
	AS BUILT	12-02-99

TITLE: VACUUM STATION P&ID

CLIENT: AREA B&F: ALBUQUERQUE, NM

DRAWN BY	DATE	SCALE	DRAWING NO.
RJB	06-21-99		PJ99-126

DESIGN BY

FILE: P:\DC\ALBUQRQU\AREAB_F\ELECTRIC\B_FPID

AI= ANALOG INPUT
AH= ALARM HORN
DI= DIGITAL INPUT
DO= DIGITAL OUTPUT
EFF= SEWAGE EFFLUENT
FS= FLOW SWITCH
HS= HAND SWITCH
HSK= HAND SWITCH KEYED
I= PLC
IOI= CONTROLLER OPERATOR INTERFACE
J= POWER SUPPLY
KI= ELAPSED TIME METER
LCP1= LEVEL CONTROL PUMP 1
LCP2= LEVEL CONTROL PUMP 2
LCH= LEVEL CONTROL HIGH
LCHH= LEVEL CONTROL HIGH HIGH
LCHR= LEVEL CONTROL HIGH RELAY
LAH= LEVEL ALARM HIGH
LAHH= LEVEL ALARM HIGH HIGH
LOS= LOCK OUT STOP
LPG= LEVEL PROBE GROUND

LPPR= LEVEL PROBE PUMP RESET
LPP1= LEVEL PROBE PUMP 1
LPP2= LEVEL PROBE PUMP 2
LPH= LEVEL PROBE HIGH LEVEL
LPAR= LEVEL PROBE HIGH ALARM RESET
LPHH= LEVEL PROBE HIGH HIGH
M= MOTOR STARTER
MI= MOTOR STARTER AUXILIARY (RUN INDICATION)
XA= MOTOR STARTER OVERLOAD AUX
MSR= MOTOR STARTER RELAY
P= PUMP
PAL= PRESSURE ALARM LOW
PBT= PUSHBUTTON TEST
PBAA= PUSHBUTTON ALARM ACKNOWLEDGE
PI= PRESSURE INDICATOR
PSL= PRESSURE SWITCH LOW
PT= PRESSURE TRANSMITTER
SI= SAFETY INTERLOCK
T= TANK
TSH= TEMPERATURE SWITCH HIGH
V= VALVE

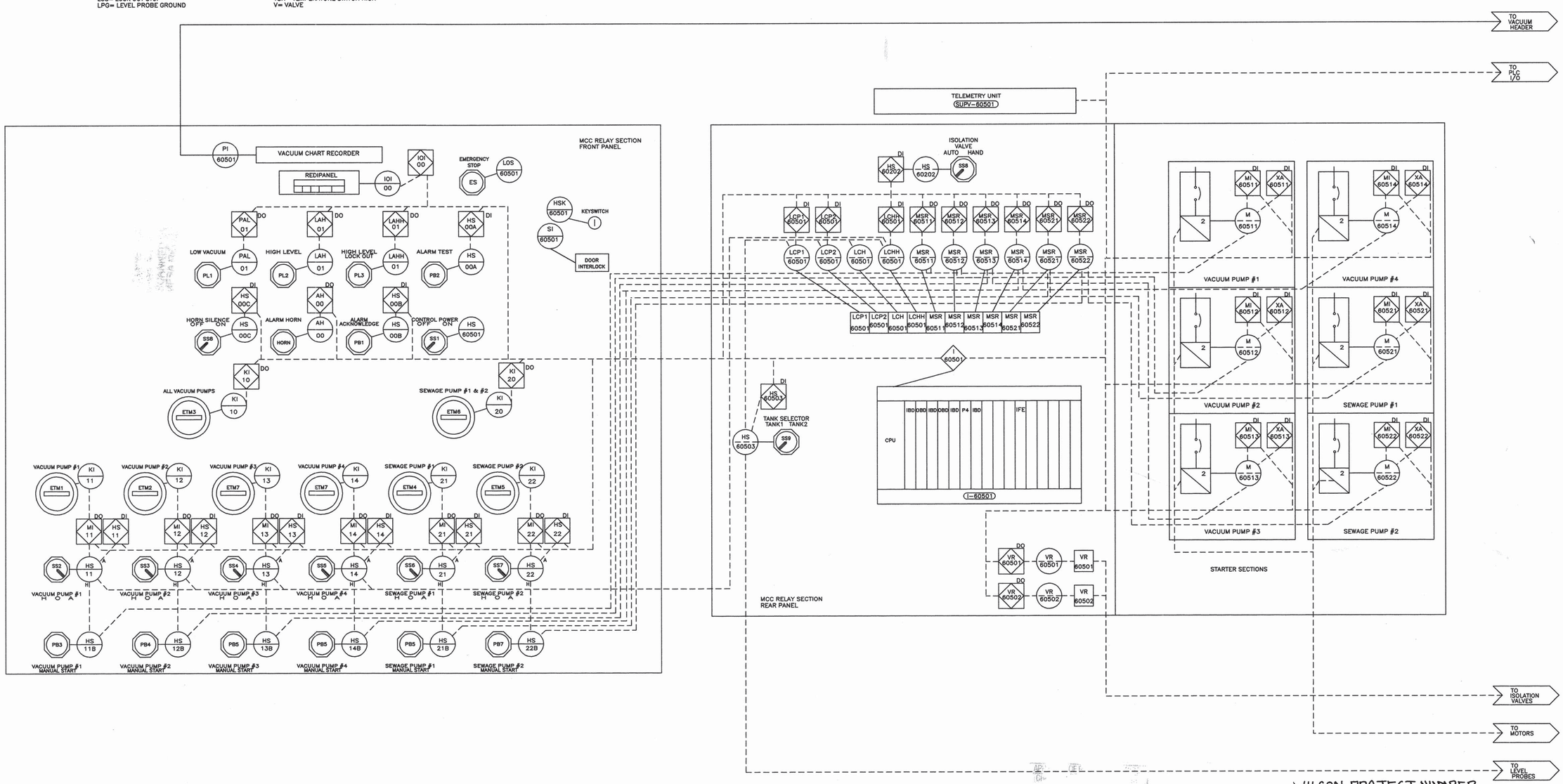

WILSON PROJECT NUMBER
96-210-034
CITY PROJECT NUMBER
567292
SHEET-25

SCANNED BY MESA REPRO

AIRVAC®

VACUUM SEWER SYSTEMS

AIRVAC, INC.
P.O. BOX 528, 4217 N. OLD U.S. 31, ROCHESTER, INDIANA 46975 U.S.A.
TELEPHONE (219) 223-3980
FAX (219) 223-5566

The Viable Alternative®

NO.	REVISIONS	DATE
	AS BUILT	12-01-99

TITLE: MCC P&ID

CLIENT: AREA B&F: ALBUQUERQUE, NM

DRAWN BY	DATE	SCALE	DRAWING NO.
RJB	06-21-99		PJ99-127

DESIGN BY