SCANNED BY PLANNING

2 3 4 5 6 7 8 9 10 11 12 13 14 15
AU 5 6 7 6 . 8 12 - 2 0 0 9

CONSTRUCTION PLANS FOR INFRASTRUCTURE IMPROVEMENTS FOR CENTRAL 7TH DAY ADVENTIST CHURCH 2201 ESTANCIA ROAD NW ALBUQUERQUE, NM

Record Drawing

AUGUST 2007

CIVIL LEGEND: (PROPOSED ONLY)

	NEW
Property line	
Building	
Edge of pavement	
Curb & gutter	
Pavement striping	
Fence	
CMU or block wall	
Utility easement	
Underground electric line	EUG
Overhead electric line	EOH
Water line	W
Sanitary sewer line	SAS
Storm drain line	SD
Index contours	25
Intermediate contours	24
Power pole	
Light pole	
Electrical transformer	
Water valve	
Fire hydrant	
Water meter	
Post indicator valve	
Siamese connection	
Post hydrant	P
Backflow preventor	BFP
Sanitary sewer manhole	
Sanitary sewer single cleanout	
Sanitary sewer double cleanout	
Storm drain manhole	
Single storm drain inlet	
Grading spot elevations	TC=25.00 FL=24.50

ABBREVIATIONS:

Bottom of footing	BOF
Bottom of wall	BOW
Existing ground	EG
Finish grade	FG
Finish floor	FF
Flowline	FL
Invert	INV
Top of asphalt	TA
Top of curb	TC
Top of footing	TOF
Top of pavement	TP
Top of retaining wall	TOR
Top of sidewalk	TSW
Top of wall	TOW
Rim	RIM

THE FOLLOWING NOTES ALSO APPLY WHEN CHECKED

- ☒ ALL UTILITIES AND UTILITY SERVICE LINES SHALL BE INSTALLED PRIOR TO PAVING.
- ☒ BACKFILL COMPACTION SHALL BE ACCORDING TO SPECIFIED STREET USE.
- ☒ TACK COAT REQUIREMENTS SHALL BE DETERMINED BY THE ENGINEER.
- ☒ SIDEWALKS AND WHEELCHAIR RAMPS WITHIN THE CURB RETURNS SHALL BE CONSTRUCTED WHEREVER A NEW CURB RETURN IS CONSTRUCTED.
- ☒ IF CURB IS DEPRESSED FOR A DRIVEPAD. THE DRIVEPAD SHALL BE CONSTRUCTED PRIOR TO ACCEPTANCE OF CURB AND GUTTER.
- ☒ ALL STORM DRAINAGE FACILITIES SHALL BE COMPLETED PRIOR TO FINAL ACCEPTANCE.
- ☒ THE REQUESTER OR DEVELOPER SHALL BE RESPONSIBLE FOR REPAIR OR REPLACEMENT OF ALL CURB AND GUTTER OR SIDEWALK DAMAGED AFTER APPROVAL BY THE CITY ENGINEER OF WORK COMPLETED BY THE CONTRACTOR.

INDEX OF DRAWINGS

SHEET NO.	DESCRIPTION
1 OF 10	TITLE SHEET, NOTES & VACINITY MAP
2 OF 10	ALTA SURVEY (FOR INFORMATION ONLY)
3 OF 10	OVERALL PAVING & DEMO PLAN
4 OF 10	ENLARGED PAVING PLAN – SHEET 1
5 OF 10	ENLARGED PAVING PLAN – SHEET 2
6 OF 10	UTILITY PLAN
7 OF 10	DETAIL SHEET
8 OF 10	ROW GRADING PLAN
9 OF 10	GRADING & DRAINAGE –FOR INFORMATION ONLY
10 OF 10	SITE PLAN FOR BUILDING PERMIT – FOR INFORMATION ONLY

AS-BUILT CERTIFICATION

I Guy C. Jackson, registered NM Civil Engineer, #13289, do hereby certify that to the best of my knowledge and belief that the as-built information for the site provided by Way John Surveyors (Thomas Johnston –NMPS #14269) provided on 1/16/09 appears to be constructed within substantial compliance of the approved Work Order Plans. All vertical and horizontal information should be field verified prior to use on future projects.

Guy C. Jackson NMPE#13289

GUY C. JACKSON NEW MEXICO 13289 REGISTERED PROFESSIONAL ENGINEER 6-29-09

NOTICE TO CONTRACTORS (CONT.)

16. CAUTION: THESE DRAWINGS DO NOT INCLUDE NECESSARY COMPONENTS FOR CONSTRUCTION SAFETY WHICH SHALL REMAIN THE RESPONSIBILITY OF THE CONTRACTOR. ALL EXCAVATION, TRENCHING AND SHORING ACTIVITIES MUST BE CARRIED-OUT IN ACCORDANCE WITH OSHA 29 CFR 1926, SUBPART P-EXCAVATIONS.
17. ANY WORK OCCURRING WITHIN AN ARTERIAL ROADWAY REQUIRES TWENTY-FOUR HOUR CONSTRUCTION.
18. CONTRACTOR SHALL MAINTAIN A GRAFFI-FREE WORK SITE. CONTRACTOR SHALL PROMPTLY REMOVE ANY AND ALL GRAFFITI FROM EQUIPMENT, WHETHER PERMANENT OR TEMPORARY.
19. WHEN APPLICABLE, CONTRACTOR SHALL SECURE "TOPSOIL DISTRUBANCE PERMIT" FROM THE CITY AND/OR FILE A NOTICE OF INTENT (N.O.I.) WITH THE EPA PRIOR TO BEGINNING CONSTRUCTION.
20. ARTERIAL / COLLECTOR ROAD USAGE FEES OF $0.01 PER SQUARE FOOT OF BARRICADED AREA PER DAY WILL BE ASSESSED ON ALL BARRICADE PERMITS FOR CLOSURES.
21. CONTRACTOR SHALL WORK CONTINUOUSLY, 24-HOURS PER DAY, ON ALL ARTERIAL ROADWAYS WHEN TRAFFIC LANES ARE CLOSED TO TRAFFIC UNLESS WORK VIOLATES THE CITY'S NOISE ORDINANCE.
22. IF THE CONTRACTOR IN NOT ALLOWED TO WORK AT NIGHT DUE TO NOISE ORDINANCE VIOLATIONS, THE CONTRACTOR SHALL OPEN ALL TRAFFIC LANES TO TRAFFIC WITH THE PROPER USE OF TRENCH PLATES DURING NON-WORKING HOURS, AND MUST WORK MINIMUM HOURS FROM 7:00A.M. TO 10:00P.M. MONDAY THROUGH SATURDAYS.
23. ARTERIAL STREETS ARE AS INDICATED IN THE "LONG RANGE ROADWAY SYSTEM" MAP PUBLISHED BY THE MID-REGION COUNCIL OF GOVERNMENTS (MRCOG).
24. FIVE (5) WORKING DAYS PRIOR TO BEGINNING CONSTRUCTION THE CONTRACTOR SHALL SUBMIT TO THE CONSTRUCTION CO-ORDINATION DIVISION A DETAILED CONSTRUCTION SCHEDULE. TWO (2) WORKING DAYS PRIOR TO CONSTRUCTION THE CONTRACTOR SHALL OBTAIN A BARRICADING PERMIT FROM THE CONSTRUCTION CO-ORDINATION DIVISION. CONTRACTOR SHALL NOTIFY BARRICADE ENGINEER (924-3400) PRIOR TO OCCUPYING AN INTERSECTION. CONTRACTOR MUST REFER TO SECTION 19 OF THE STANDARD SPECIFICATION FOR TRAFFIC CONTROL.

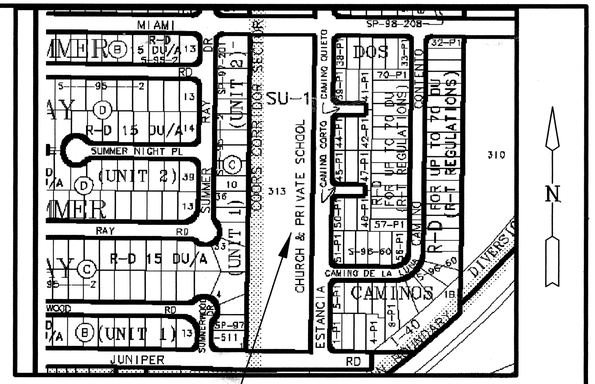

PROJECT LOCATION

VICINITY MAP

INFRASTRUCTURE IMPROVEMENTS FOR CENTRAL 7TH DAY ADVENTIST CHURCH

SCALE: N.T.S.
(ZONE ATLAS MAP NO. H11-Z)

NOTICE TO CONTRACTORS

1. ALL WORK DETAILED ON THESE PLANS TO BE PERFORMED UNDER CONTRACT SHALL, EXCEPT AS OTHERWISE STATED OR PROVIDED FOR HEREON, BE CONSTRUCTED IN ACCORDANCE WITH THE CITY OF ALBUQUERQUE STANDARD SPECIFICATIONS--PUBLIC WORKS CONSTRUCTION--1986--UPDATE NO. 7 AND ~~1988~~ Amendment 1
2. TWO (2) WORKING DAYS PRIOR TO ANY EXCAVATION, CONTRACTOR MUST CONTACT NEW MEXICO ONE CALL SYSTEM, 260-1990, (ALBUQUERQUE AREA) 1-800-321-ALERT (2537) (STATEWIDE) FOR LOCATION OF EXISTING UTILITIES.
3. IF ANY UTILITY LINES, PIPELINES, OR UNDERGROUND UTILITY LINES ARE SHOWN ON THESE DRAWINGS, THEY ARE SHOWN IN AN APPROXIMATE MANNER ONLY, AND SUCH LINES MAY EXIST WHERE NONE ARE SHOWN. IF ANY SUCH EXISTING LINES ARE SHOWN, THE LOCATION IS BASED UPON INFORMATION PROVIDED BY THE OWNER OF SAID UTILITY, AND THE INFORMATION MAY BE INCOMPLETE, OR MAY BE OBSOLETE BY THE TIME CONSTRUCTION COMMENCES. THE ENGINEER HAS CONDUCTED ONLY PRELIMINARY INVESTIGATION OF THE LOCATION, DEPTH, SIZE, OR TYPE OF EXISTING UTILITY LINES, PIPELINES, OR UNDERGROUND UTILITY LINES. THIS INVESTIGATION IS NOT CONCLUSIVE, AND MAY NOT BE COMPLETE, THEREFORE, MAKES NO REPRESENTATION PERTAINING THERETO, AND ASSUMES NO RESPONSIBILITY OR LIABILITY THEREFOR. THE CONTRACTOR SHALL INFORM ITSELF OF THE LOCATION OF ANY UTILITY LINE, PIPELINE, OR UNDERGROUND UTILITY LINE IN OR NEAR THE AREA OF THE WORK OF THE WORK IN ADVANCE OF AND DURING EXCAVATION WORK. THE CONTRACTOR IS FULLY RESPONSIBLE FOR ANY AND ALL DAMAGE CAUSED BY ITS FAILURE TO LOCATE, IDENTIFY AND PRESERVE ANY AND ALL EXISTING UTILITIES, PIPELINES, AND UNDERGROUND UTILITY LINES. IN PLANNING AND CONDUCTING EXCAVATION, THE CONTRACTOR SHALL COMPLY WITH STATE STATUTES, MUNICIPAL AND LOCAL ORDINANCES, RULES AND REGULATIONS, IF ANY, PERTAINING TO THE LOCATION OF THESE LINES AND FACILITIES.
4. SHOULD A CONFLICT EXIST BETWEEN THESE PLANS AND ACTUAL FIELD CONDITIONS, THE CONTRACTOR SHALL PROMPTLY NOTIFY THE ENGINEER IN WRITING SO THAT THE CONFLICT CAN BE RESOLVED WITH A MINIMUM AMOUNT OF DELAY FOR ALL PARTIES.
5. THE CONTRACTOR SHALL MAINTAIN ACCESS TO ADJACENT PROPERTIES DURING CONSTRUCTION.
6. ALL WORK ON THIS PROJECT SHALL BE PERFORMED IN ACCORDANCE WITH APPLICABLE FEDERAL, STATE AND LOCAL LAWS, RULES AND REGULATIONS CONCERNING SAFETY AND HEALTH.
7. ALL UTILITIES AND UTILITY SERVICE LINES SHALL BE INSTALLED PRIOR TO PAVING.
8. BACKFILL COMPACTION SHALL BE ACCORDING TO SPECIFIED STREET USE.
9. TACK COAT REQUIREMENTS SHALL BE DETERMINED DURING CONSTRUCTION BY THE PROJECT ENGINEER.
10. SIDEWALKS AND WHEELCHAIR RAMPS WITHIN THE CURB RETURNS SHALL BE CONSTRUCTED WHEREVER A NEW CURB RETURN IS CONSTRUCTED.
11. IF CURB IS DEPRESSED FOR A DRIVE PAD OR A HANDICAP RAMP, THE DRIVE PAD OR RAMP SHALL BE CONSTRUCTED PRIOR TO ACCEPTANCE OF THE CURB AND GUTTER.
12. ALL STORM DRAINAGE FACILITIES SHALL BE COMPLETED PRIOR TO FINAL ACCEPTANCE.
13. ALL UTILITY WORK SHALL BE CONSTRUCTED IN ACCORDANCE WITH A.B.C.W.U.A. THE CONTRACTOR SHALL NOTIFY A.B.C.W.U.A SEVEN (7) WORKING DAYS PRIOR TO BEGINNING THE CONSTRUCTION OF THE UTILITIES.
14. CONTRACTOR SHALL NOTIFY THE CITY ENGINEER NOT LESS THAN SEVEN (7) DAYS PRIOR TO STARTING WORK IN ORDER THAT THE CITY SURVEYOR MAY TAKE NECESSARY MEASURES TO INSURE THE PRESURVATION OF SURVEY MONUMENTS. CONTRACTOR SHALL NOT DISTURB PERMANENT SURVEY MONUMENTS WITHOUT THE CONSENT OF THE CITY SURVEYOR AND SHALL NOTIFY THE CITY SURVEYOR AND BEAR THE EXPENSE OF REPLACING ANY THAT MAY BE DISTURBED WITHOUT PERMISSION. REPLACEMENT SHALL BE DONE ONLY BY THE CITY SURVEYOR. WHEN A CHANGE IS MADE IN THE FINISHED ELEVATION OF THE PAVEMENT OF ANY ROADWAY IN WHICH A PERMANENT SURVEY MONUMENT IS LOCATED, CONTRACTOR SHALL, AT HIS OWN EXPENSE, ADJUST THE MONUMENT COVER TO THE NEW GRADE UNLESS OTHERWISE SPECIFIED. REFER TO SECTION 4.4 OF THE SPECIFICATIONS.
15. ALL STREET STRIPING ALTERED OR DESTROYED SHALL BE REPLACED WITH PLASTIC REFLECTORIZED STRIPING BY CONTRACTOR TO EXISTING LOCATION OR AS INDICATED BY THIS PLAN SET.
16. CONTRACTOR SHALL BE RESPONSIBLE FOR PROVIDING & MAINTAINING ALL CONSTRUCTION SIGNAGE UNTIL PROJECT HAS BEEN ACCEPTED BY THE COA.

APPROVED AS RECORD DRAWINGS
DESIGN REVIEW SECTION
CITY CONSTRUCTION ENGINEER
DATE: 7/27/2009

DRB NO. 1005126

REV.	SHEET	CITY ENGINEER	DATE	USER DEPARTMENT	DATE	USER DEPARTMENT	DATE

ENGINEERS STAMP & SIGNATURE	APPROVALS	ENGINEER	DATE	★★★★★★★★★★★★★
GUY C. JACKSON NEW MEXICO 13289 REGISTERED PROFESSIONAL ENGINEER 9-14-07	DRC Chairman		11-20-07	APPROVED FOR CONSTRUCTION
	Transportation		9-14-07	
	Water/Wastewater	William J. Parks	9-24-07	
	Hydrology		9-24-07	
	NMDOT			
	Const. Mngmt.			9-26-07
	NMUI			City Engineer Date

City Project No. 567682

Sheet 1 Of 10

GJA Guy Jackson & Associates LLC
Civil Engineering for Commercial and Residential Development

SCANNED BY PLANNING

BOUNDARY SURVEY

NOTE: SEWER INVERT ELEVATIONS WERE DERIVED FROM CITY OF ALBUQUERQUE RECORDS, PROJECT NO. 567681, "DOS CAMINOS". RECORD ELEVATIONS APPEARING ON THAT PROJECT ARE SLD 1929. THEY HAVE BEEN ADJUSTED +2.67 FEET TO NAVD 88, AS THEY APPEAR ON THIS DRAWING. IT SHALL BE THE CONTRACTOR'S RESPONSIBILITY TO VERIFY INVERTS PRIOR TO CONSTRUCTION.

SCALE: 1 INCH = 40 FEET (0, 20, 40, 80)

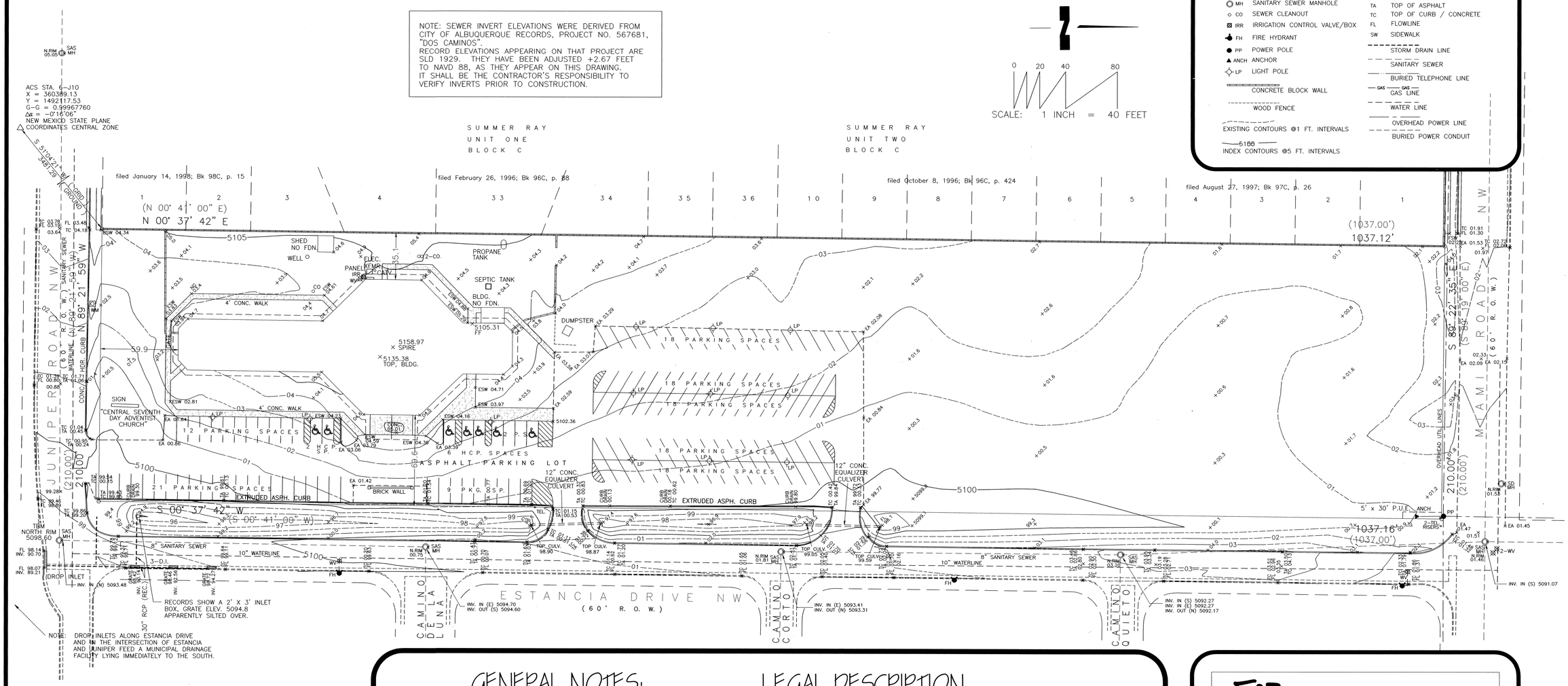

LEGEND:

- EM ELECTRIC METER
- GM GAS METER
- WV WATER VALVE
- WM WATER METER
- MH SANITARY SEWER MANHOLE
- CO SEWER CLEANOUT
- IRR IRRIGATION CONTROL VALVE/BOX
- FH FIRE HYDRANT
- PP POWER POLE
- ANCH ANCHOR
- LP LIGHT POLE
- CONCRETE BLOCK WALL
- WOOD FENCE
- EXISTING CONTOURS @1 FT. INTERVALS
- 5100 INDEX CONTOURS @5 FT. INTERVALS
- +67.12 SPOT ELEVATION UNLESS OTHERWISE INDICATED, SPOT ELEVATIONS ARE TO NATURAL GRADE
- EA EDGE OF ASPHALT
- TA TOP OF ASPHALT
- TC TOP OF CURB / CONCRETE
- FL FLOWLINE
- SW SIDEWALK
- STORM DRAIN LINE
- SANITARY SEWER
- BURIED TELEPHONE LINE
- GAS GAS LINE
- WATER LINE
- OVERHEAD POWER LINE
- BURIED POWER CONDUIT

GENERAL NOTES:

1. Bearings are based upon legal description of record. Distances are as measured between recovered monuments.
2. Bearings and distances in parenthesis indicate record information, while those without reflect actual field measurements. All found and accepted corners are tagged, "P.L.S. 14269", where applicable.
3. Basis of elevations: ACS STATION 19-H11
   1 3/4" metallic disk, stamped "ACS BM, 19-H11", epoxied to top of curb 5.50 feet west of the WSW curb return at the intersection of Ouray Road and Estancia Drive, N.W.
   ELEV. 5107.965 (NGVD 1988)
   TBM: North rim, Sanitary Sewer manhole, located in intersection of Estancia Drive and Juniper Road, NW
   ELEV. 5098.60

FLOOD NOTE

The above described property is located within Zone "X (No flood hazard)", Community Panel No. 350002 0327 E, dated November 19, 2003, and is not located within a Special Flood Hazard Boundary indicated by FEMA Flood Insurance Rate Maps. Determination of Flood Hazard is by graphic plotting only.

LEGAL DESCRIPTION

Tract numbered Three-hundred-thirteen (313) of TOWN OF ATRISCO GRANT UNIT 8, Albuquerque, Bernalillo County, New Mexico, as the same is shown and designated on the plat thereof, filed in the Office of the County Clerk of Bernalillo County, New Mexico, on December 5, 1944, in Plat Book D00, page 117.

SURVEYOR'S CERTIFICATION

I, Thomas D. Johnston, a Registered Professional Surveyor licensed under the laws of the State of New Mexico, do hereby certify that this survey was performed by me or under my direct supervision, that all buildings, structures, and improvements on the property are shown hereon, that all easements of record or made known to me by the owner of record or by the title company are shown hereon, and that this survey was performed to the Minimum Standards for Land Surveys in the State of New Mexico as adopted October 1, 2000, and is true and correct to the best of my knowledge and belief.
I further certify that this survey and plat do not meet the requirements of the Bernalillo County Subdivision Ordinance, and is not intended to subdivide any parcel.

Thomas D. Johnston, NMPS 14269 Date

C:\DWA\Projects\06005 Central 7th Day Adventist\Drawings\Survey\10-16-06\19-H11.bmp

FOR INFORMATION ONLY

C:\DWA\Projects\06005 Central 7th Day Adventist\Drawings\Survey\10-16-06\Logosidecolor-smadrevo.bmp

330 LOUISIANA BLVD., N.E.
ALBUQUERQUE, N.M. 87108
PHONE: (505) 255-2052 FAX: (505) 255-2887

Date of Survey: 8/4/06	Draftsman: T R J
Date of Last Revision: N/A	Job No.: SC-7-07-2006
File No.: c:\SC70706.dwg	Scale: 1" = 50'
For: PROGRESSIVE CONSTRUCTION MANAGEMENT	
Contact: IAN HARMON	Phone No.: (505) 890-1359

5442

20 of 10

2362

SCANNED BY PLANNING

GENERAL NOTES:

A. THE CONTRACTOR SHALL FIELD VERIFY ALL EXISTING UTILITY LOCATIONS AND NOTIFY THE ENGINEER IMMEDIATELY OF ANY DISCREPANCIES.
B. CONTRACTOR IS TO SAW CUT, REMOVE AND REPLACE THE EXISTING ASPHALT PAVEMENT AT A DIMENSION OF 1'-00" BEYOND THE LIP OF THE NEW GUTTER.
C. CONTRACTOR IS RESPONSIBLE FOR ALL REPAIR AND/OR REPLACEMENT OF ALL UTILITY CONDUITS AND EXISTING LINES.
D. ANY ADDITIONAL GRADING REQUIRED TO MATCH PROPOSED STREET GRADES SHALL BE INCIDENTAL TO PAVING ITEMS.
E. CONTRACTOR SHALL PARK EQUIPMENT AND VEHICLES AS NOT TO INTERFERE WITH NORMAL ACTIVITIES OF OTHER CONTRACTORS ON SITE.
F. ANY DAMAGE TO THE EXISTING FACILITIES (CURB & GUTTER, PAVEMENT, CONDUITS, IRRIGATION, LANDSCAPING, UTILITY LINES, ETC.,) DURING CONSTRUCTION SHALL BE REPLACED AT THE CONTRACTORS EXPENSE.
G. TOPOGRAPHICAL & BOUNDARY SURVEY PROVIDED BY THOMAS JOHNSTON, LS#14269. GJA IS NOT RESPONSIBLE FOR ANY DISCREPANCIES IN THE SURVEYS.
H. CONTRACTOR TO ADJUST ALL EXISTING VALVE COVERS, MANHOLES, GRATES TO NEW GRADES WHERE APPLICABLE.

CONSTRUCTION NOTES:

1. PROPOSED BUILDING (NOT PORT OF WORK ORDER)
2. EXISTING CHURCH (NOT PART OF WORK ORDER)
3. PROPOSED PARKING (NOT PART OF WORK ORDER)
4. PROPERTY LINE
5. AREA FOR FUTURE EXPANSION
6. REMOVE & DISPOSE EXIST. CONCRETE CURB.
7. SAW CUT, REMOVE & DISPOSE EXIST. ASPHALT PAVEMENT 1.0' BEYOND LIP OF NEW CURB & GUTTER.
8. NEW CURB & GUTTER, SEE SHEETS 4 & 5.
9. NEW CONCRETE SIDEWALK, SEE SHEETS 4 & 5.
10. NEW WHEEL CHAIR RAMP, SEE SHEETS 4 & 5.
11. NEW CONCRETE VALLEY GUTTER, SEE SHEETS 4 & 5.
12. SAWCUT, REMOVE & REPLACE ASPHALT FOR INSTALLATION OF NEW 1½" WATER SERVICE & REMOVAL OF 3/4" EXISTING SERVICE. REMOVE EXISTING 3/4" WATER SERVICE & CAP AT CORPORATION STOP TO BE CLOSED. INSTALL NEW 1-1/2" WATER SERVICE & METER BOX & LID PER COA STD DWG. 2363. CONTRACTOR TO INSTALL 1-1/2" ANGLED DUAL CHECK VALVE (MODEL-FORD H HPA 31-666-OR APPROVALED EQUAL). INSTALL NEW PAVEMENT TO CONFORM WITH COA STD DWG 2465.

JJJ 8-21-08

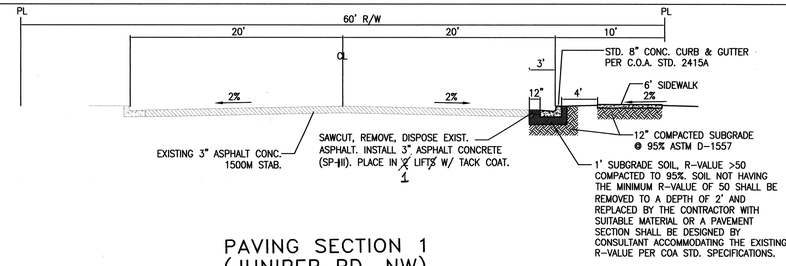

PAVING SECTION 1
(JUNIPER RD. NW)

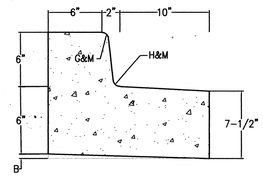

MODIFIED DEPRESSED MEDIAN CURB & GUTTER SEE COA STD DWGS 2415A&B FOR CONSTRUCTION NOTES

MODIFIED DEPRESSED MEDIAN CURB & GUTTER

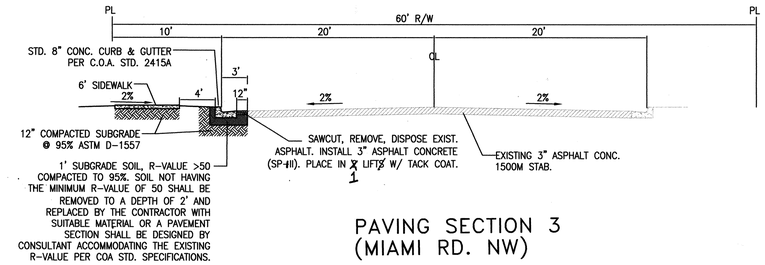

PAVING SECTION 3
(MIAMI RD. NW)

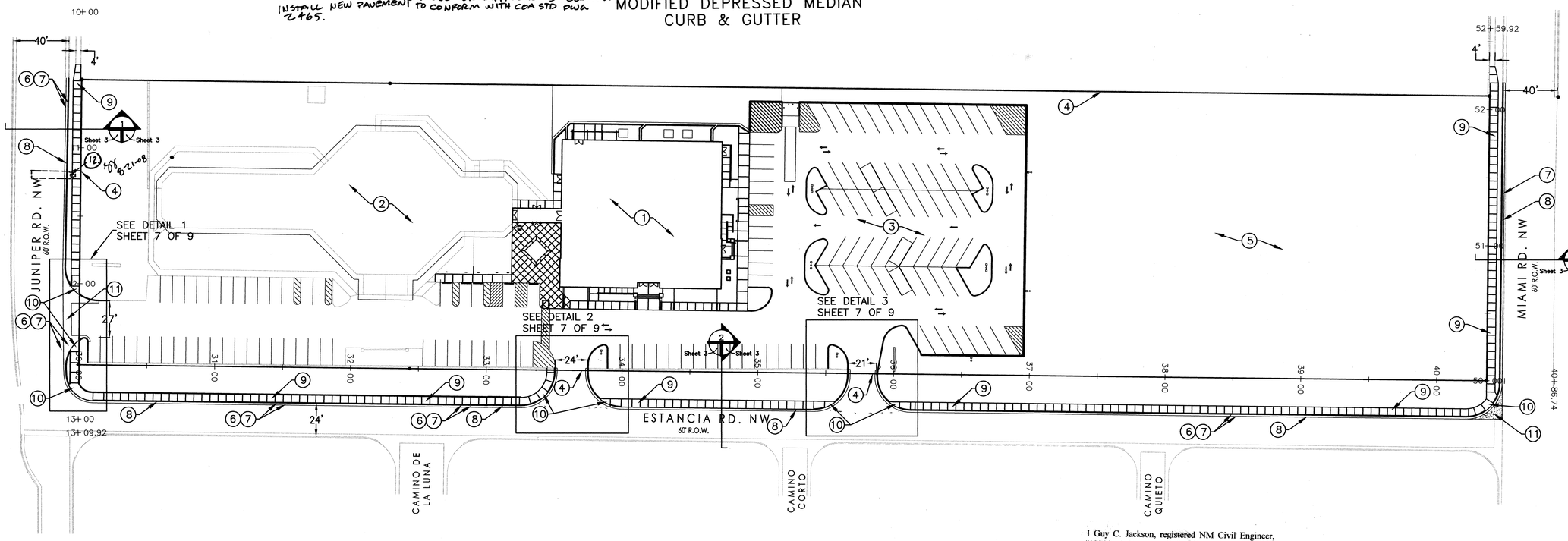

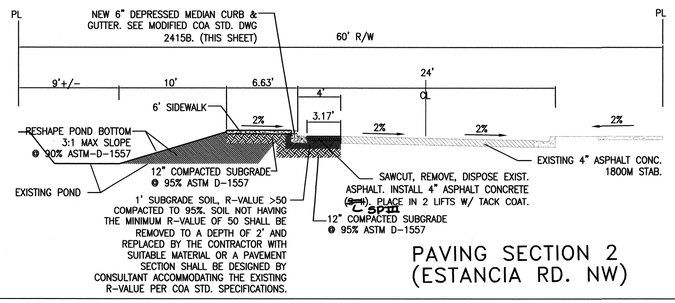

PAVING SECTION 2
(ESTANCIA RD. NW)

N

OVERALL PAVING + DEMO PLAN

SCALE

0 20' 40' 80' 120'

I Guy C. Jackson, registered NM Civil Engineer, #13289, do hereby certify that to the best of my knowledge and belief that the as-built information for the site provided by Way John Surveyors (Thomas Johnston –NMPS #14269) provided on 1/16/09 appears to be constructed within substantial compliance of the approved Work Order Plans. All vertical and horizontal information should be field verified prior to use on future projects.

Guy C. Jackson NMPE#13289

GUY C. JACKSON NEW MEXICO 13289 REGISTERED PROFESSIONAL ENGINEER

GJA Guy Jackson & Associates LLC
Civil Engineering for Commercial and Residential Development

AS-BUILT INFORMATION
CONTRACTOR RIO WEST DATE 10/08
WORK INSPECTOR BY WAY-JOHN SURVEYING CO DATE 10/08
ACCEPTANCE BY GJA, LLC DATE 5/09
CERTIFICATION BY RIO WEST DATE 1/09
DRAWINGS CORRECTED BY GJA, LLC DATE 3/09
MICRO-FILM INFORMATION
RECORDED BY DATE
NO.

BENCH MARKS
ACS BRASS CAP STAMPED 19-H11
STATION "19-H11", ELEV=5107.965' (NGVD1988)

SURVEY INFORMATION
FIELD NOTES

NO.	BY	DATE
1	THOMAS D. JOHNSTON	8/6/06

ENGINEER'S SEAL
GUY C. JACKSON NEW MEXICO 13289 REGISTERED PROFESSIONAL ENGINEER

NO.	DATE	REMARKS	BY
		REVISIONS	
		DESIGN	

DESIGNED BY GJA DATE 8-07
DRAWN BY GJA DATE 8-07
CHECKED BY GJA DATE 8-07

CITY OF ALBUQUERQUE
PUBLIC WORKS DEPARTMENT
ENGINEERING DEVELOPMENT GROUP

TITLE: IMPROVEMENT FOR CENTRAL 7TH DAY ADVENTIST CHURCH
OVERALL PAVING & DEMO PLAN

DESIGN REVIEW COMMITTEE: APPROVED NOV 20 2007 DESIGN REVIEW COMMITTEE
CITY ENGINEER APPROVAL: APPROVED SEP 26 2008 CITY ENGINEER
LAST DESIGN UPDATE | MO./DAY/YR. | MO./DAY/YR.

CITY PROJECT NO.	ZONE MAP NO.	SHEET	OF
567682	H-11	3	10

SCANNED BY PLANNING

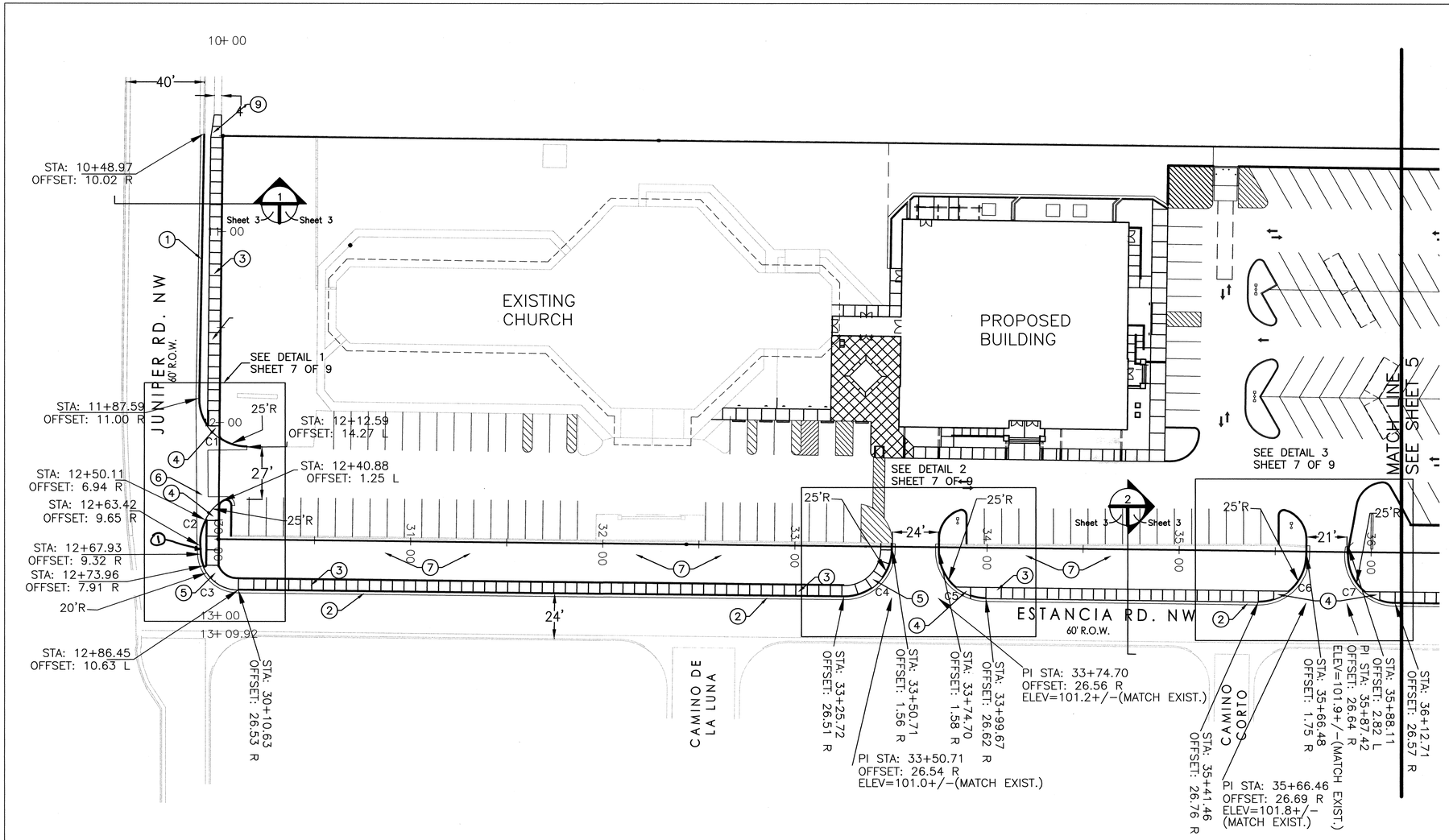

GENERAL NOTES:

A. THE CONTRACTOR SHALL FIELD VERIFY ALL EXISTING UTILITY LOCATIONS AND NOTIFY THE ENGINEER IMMEDIATELY OF ANY DISCREPANCIES.

B. CONTRACTOR IS TO SAW CUT, REMOVE AND REPLACE THE EXISTING ASPHALT PAVEMENT AT A DIMENSION OF 1'-00" BEYOND THE LIP OF THE NEW GUTTER.

C. CONTRACTOR IS RESPONSIBLE FOR ALL REPAIR AND/OR REPLACEMENT OF ALL UTILITY CONDUITS AND EXISTING LINES.

D. ANY ADDITIONAL GRADING REQUIRED TO MATCH PROPOSED STREET GRADES SHALL BE INCIDENTAL TO PAVING ITEMS.

E. CONTRACTOR SHALL PARK EQUIPMENT AND VEHICLES AS NOT TO INTERFERE WITH NORMAL ACTIVITIES OF OTHER CONTRACTORS ON SITE.

F. ANY DAMAGE TO THE EXISTING FACILITIES (CURB & GUTTER, PAVEMENT, CONDUITS, IRRIGATION, LANDSCAPING, UTILITY LINES, ETC.,) DURING CONSTRUCTION SHALL BE REPLACED AT THE CONTRACTORS EXPENSE.

G. TOPOGRAPHICAL & BOUNDARY SURVEY PROVIDED BY THOMAS JOHNSTON, LS#14269. GJA IS NOT RESPONSIBLE FOR ANY DISCREPANCIES IN THE SURVEYS.

H. CONTRACTOR TO ADJUST ALL EXISTING VALVE COVERS, MANHOLES, GRATES TO NEW GRADES WHERE APPLICABLE.

I. TRUNCATED DOMES SHALL BE DESIGNED & CONSTRUCTED IN ACCORDANCE W/ADA GUIDELINES. SUBMIT SPEC.'S TO COA CONSTRUCTION ENGINEER FOR EVALUATION PRIOR TO CONSTRUCTION.

CONSTRUCTION NOTES:

1. INSTALL STANDARD 8" CURB & GUTTER PER COA STD. DET. 2415A.
2. INSTALL 6" DEPRESSED MEDIAN CURB & GUTTER PER MODIFIED COA STD. DWG. 2415A. (SEE SHEET 3)
3. INSTALL STANDARD 6'-WIDE CONCRETE SIDEWALK PER COA STD. DWG. 2430.
4. INSTALL UNI-DIRECTIONAL WHEEL CHAIR RAMP WITH TRUNCATED DOMES (DETECTABLE WARNING SURFACE) PER COA STD. DWG. 2426 & ENLARGED DETAILS AS SHOWN ON SHEET 7.
5. INSTALL MULTIDIRECTIONAL WHEEL CHAIR RAMP WITH TRUNCATED DOMES (DETECTABLE WARNING SURFACE) PER COA STD. DWG. 2441 CASE II & ENLARGED DETAILS AS SHOWN ON SHEET 7.
6. INSTALL 6' CONCRETE VALLEY GUTTER PER COA STD. DWG. 2420.
7. ~~GRADING IN PONDING AREA UNDER AND ADJACENT TO NEW SIDEWALK PER APPROVED GRADING & DRAINAGE PLAN BY J. ARTHUR BLESSING ENGINEERING.~~ CC 9-24-07
8. NOT USED.
9. REMOVE & REPLACE 12' OF SIDEWALK TRANSITION PER COA STD. DWG. 2432.

LEGEND & ABBREVIATIONS:

- PROPERTY LINE = CONSTRUCTION BASELINE
- +04.61 EXISTING SPOT ELEVATION
- 100.00 PROPOSED SPOT ELEVATION
- EXISTING CONTOUR

CURVE DATA				
CURVE	RADIUS	DELTA	LENGTH	TANGENT
C1	25.00	91°06'56"	39.76	25.49
C2	25.00	61°31'22"	26.84	14.88
C3	20.00	85°45'30"	29.94	18.57
C4	25.00	89°54'00"	39.23	24.96
C5	25.00	90°02'17"	39.29	25.02
C6	25.00	89°57'43"	39.25	24.98
C7	25.00	100°04'11"	43.66	29.83

C1	TC	FL
1	SEE DETAIL	1/SHEET 7
2	SEE DETAIL	1/SHEET 7
3	SEE DETAIL	1/SHEET 7

C2	TC	FL
1	SEE DETAIL	1/SHEET 7
2	SEE DETAIL	1/SHEET 7
3	SEE DETAIL	1/SHEET 7

C3	TC	FL
1	SEE DETAIL	1/SHEET 7
2	SEE DETAIL	1/SHEET 7
3	SEE DETAIL	1/SHEET 7

C4	TC	FL
1	SEE DETAIL	2/SHEET 7
2	SEE DETAIL	2/SHEET 7
3	SEE DETAIL	2/SHEET 7

C5	TC	FL
1	SEE DETAIL	2/SHEET 7
2	SEE DETAIL	2/SHEET 7
3	SEE DETAIL	2/SHEET 7

C6	TC	FL
1	SEE DETAIL	3/SHEET 7
2	SEE DETAIL	3/SHEET 7
3	SEE DETAIL	3/SHEET 7

C7	TC	FL
1	SEE DETAIL	3/SHEET 7
2	SEE DETAIL	3/SHEET 7
3	SEE DETAIL	3/SHEET 7

I Guy C. Jackson, registered NM Civil Engineer, #13289, do hereby certify that to the best of my knowledge and belief that the as-built information for the site provided by Way John Surveyors (Thomas Johnston –NMPS #14269) provided on 1/16/09 appears to be constructed within substantial compliance of the approved Work Order Plans. All vertical and horizontal information should be field verified prior to use on future projects.

Guy C. Jackson NMPE#13289

GUY C. JACKSON NEW MEXICO 13289 REGISTERED PROFESSIONAL ENGINEER

GIA Guy Jackson & Associates, LLC
Civil Engineering for Commercial and Residential Development

ENLARGED PAVING PLAN - SHEET 1

SCALE

0 15' 30' 60' 90'

AS-BUILT INFORMATION

		DATE
CONTRACTOR	RIO WEST	10/08
SURVEY STAKED BY	WAY JOHN SURVEYING	10/08
INSPECTOR'S ACCEPTANCE BY	GJA, LLC	3/09
FIELD VERIFICATION BY	RIO WEST	1/09
DRAWINGS CORRECTED BY	GJA, LLC	3/09

MICRO-FILM INFORMATION

RECORDED BY	DATE
NO.	

BENCH MARKS: ACS BRASS CAP STAMPED 19-H11 STATION "19-H11", ELEV=5107.965' (NGVD1988)

SURVEY INFORMATION — FIELD NOTES

NO.	BY	DATE
1	THOMAS D. JOHNSTON	8/6/06

ENGINEER'S SEAL: GUY C. JACKSON NEW MEXICO 13289 REGISTERED PROFESSIONAL ENGINEER

NO.	DATE	REMARKS	BY
		REVISIONS	
		DESIGN	

DESIGNED BY GJA DATE 8-07
DRAWN BY GJA DATE 8-07
CHECKED BY GJA DATE 8-07

CITY OF ALBUQUERQUE
PUBLIC WORKS DEPARTMENT
ENGINEERING DEVELOPMENT GROUP

TITLE: IMPROVEMENT FOR CENTRAL 7TH DAY ADVENTIST CHURCH
ENLARGED PAVING PLAN – SHEET 1

DESIGN REVIEW COMMITTEE: APPROVED NOV 20 2007 DESIGN REVIEW COMMITTEE

CITY ENGINEER APPROVAL: APPROVED SEP 26 2008 CITY ENGINEER

LAST DESIGN UPDATE | MO./DAY/YR. | MO./DAY/YR.

CITY PROJECT NO.	ZONE MAP NO.	SHEET	OF
567682	H-11	4	10

SCANNED BY PLANNING

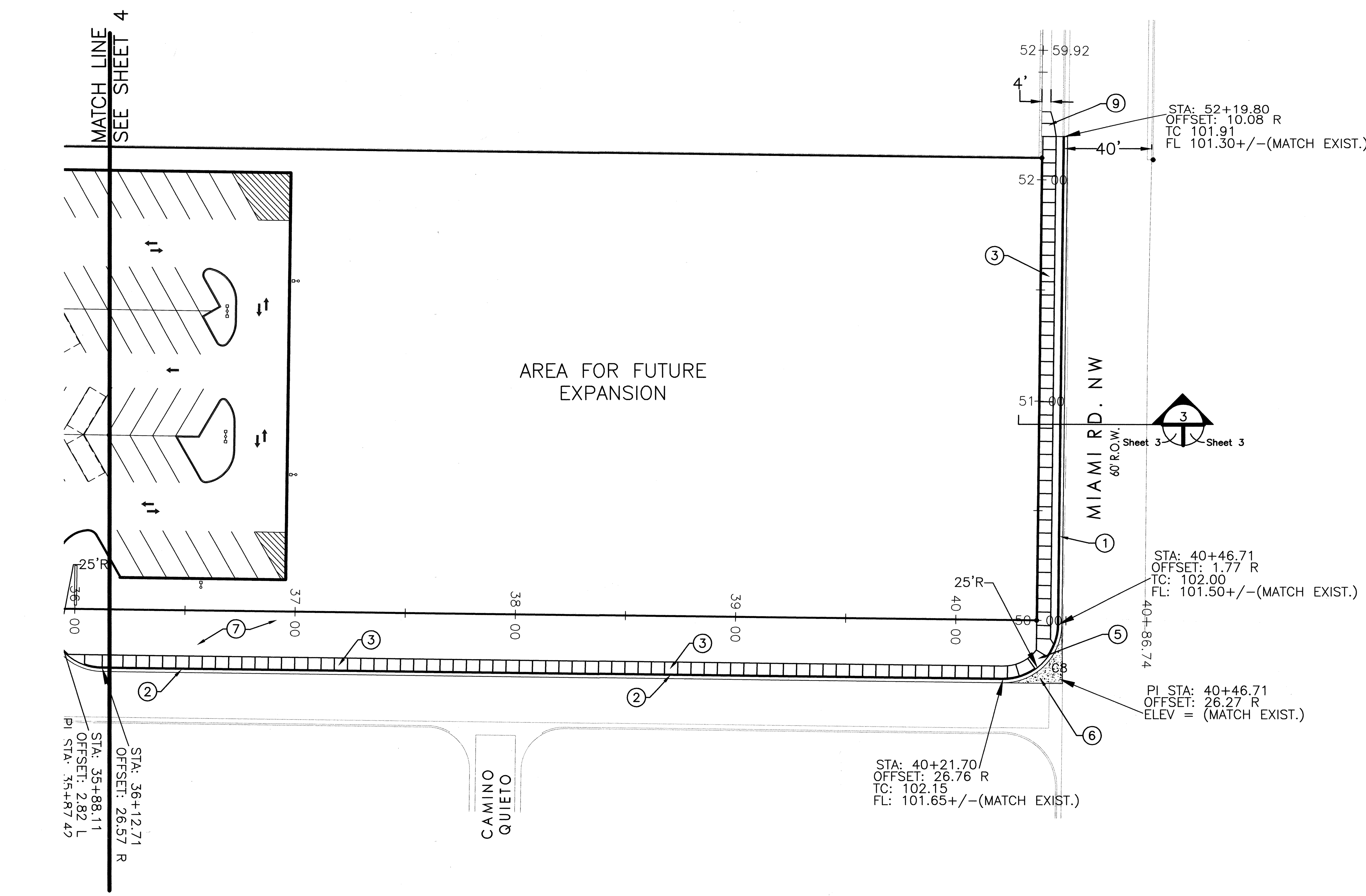

LEGEND & ABBREVIATIONS:

- PROPERTY LINE = CONSTRUCTION BASELINE
- +04.61 EXISTING SPOT ELEVATION
- 100.00 PROPOSED SPOT ELEVATION
- EXISTING CONTOUR

CURVE DATA				
CURVE	RADIUS	DELTA	LENGTH	TANGENT
C8	25.00	90°00'16"	39.27	25.00

C8	TC	FL
1	102.54	101.54
2	101.58	101.58
3	102.11	101.61

ENLARGED PAVING PLAN - SHEET 2

SCALE

0 15' 30' 60' 90'

I Guy C. Jackson, registered NM Civil Engineer, #13289, do hereby certify that to the best of my knowledge and belief that the as-built information for the site provided by Way John Surveyors (Thomas Johnston -NMPS #14269) provided on 1/16/09 appears to be constructed within substantial compliance of the approved Work Order Plans. All vertical and horizontal information should be field verified prior to use on future projects.

Guy C. Jackson NMPE#13289

GENERAL NOTES:

A. THE CONTRACTOR SHALL FIELD VERIFY ALL EXISTING UTILITY LOCATIONS AND NOTIFY THE ENGINEER IMMEDIATELY OF ANY DISCREPANCIES.

B. CONTRACTOR IS TO SAW CUT, REMOVE AND REPLACE THE EXISTING ASPHALT PAVEMENT AT A DIMENSION OF 1'-00" BEYOND THE LIP OF THE NEW GUTTER.

C. CONTRACTOR IS RESPONSIBLE FOR ALL REPAIR AND/OR REPLACEMENT OF ALL UTILITY CONDUITS AND EXISTING LINES.

D. ANY ADDITIONAL GRADING REQUIRED TO MATCH PROPOSED STREET GRADES SHALL BE INCIDENTAL TO PAVING ITEMS.

E. CONTRACTOR SHALL PARK EQUIPMENT AND VEHICLES AS NOT TO INTERFERE WITH NORMAL ACTIVITIES OF OTHER CONTRACTORS ON SITE.

F. ANY DAMAGE TO THE EXISTING FACILITIES (CURB & GUTTER, PAVEMENT, CONDUITS, IRRIGATION, LANDSCAPING, UTILITY LINES, ETC.,) DURING CONSTRUCTION SHALL BE REPLACED AT THE CONTRACTORS EXPENSE.

G. TOPOGRAPHICAL & BOUNDARY SURVEY PROVIDED BY THOMAS JOHNSTON, LS#14269. GJA IS NOT RESPONSIBLE FOR ANY DISCREPANCIES IN THE SURVEYS.

H. CONTRACTOR TO ADJUST ALL EXISTING VALVE COVERS, MANHOLES, GRATES TO NEW GRADES WHERE APPLICABLE.

I. WHEEL CHAIR RAMPS SHALL BE DESIGNED & CONSTRUCTED IN ACCORDANCE W/ADA GUIDELINES. SUBMIT SPEC.'S TO COA CONSTRUCTION ENGINEER FOR EVALUATION PRIOR TO CONSTRUCTION.

CONSTRUCTION NOTES: ○

1. INSTALL STANDARD 8" CURB & GUTTER PER COA STD. DET. 2415A.
2. INSTALL 6" DEPRESSED MEDIAN CURB & GUTTER PER MODIFIED COA STD. DWG. 2415A. (SEE SHEET 3)
3. INSTALL STANDARD 6'-WIDE CONCRETE SIDEWALK PER COA STD. DWG. 2430.
4. INSTALL UNI-DIRECTIONAL WHEEL CHAIR RAMP WITH TRUNCATED DOMES (DETECTABLE WARNING SURFACE) PER COA STD. DWG. 2426 & ENLARGED DETAILS AS SHOWN ON SHEET 7.
5. INSTALL MULTIDIRECTIONAL WHEEL CHAIR RAMP WITH TRUNCATED DOMES (DETECTABLE WARNING SURFACE) PER COA STD. DWG. 2441 CASE II.
6. INSTALL CONCRETE VALLEY GUTTER FILLET PER COA STD. DWG. 2420 & ENLARGED DETAILS AS SHOWN ON SHEET 7.
7. GRADING IN PONDING AREA UNDER AND ADJACENT TO NEW SIDEWALK PER APPROVED GRADING & DRAINAGE PLAN BY J. ARTHUR BLESSING ENGINEERING.
8. NOT USED.
9. REMOVE & REPLACE 12' OF SIDEWALK TRANSITION PER COA STD. DWG. 2432.

AS-BUILT INFORMATION
CONTRACTOR RIO WEST DATE 10/08
WORK STAKED BY WAYJOHN SURVEYING CO DATE 10/08
INSPECTOR'S ACCEPTANCE BY GJA, LLC DATE 3/09
FIELD VERIFICATION BY RIO WEST DATE 1/09
DRAWINGS CORRECTED BY GJA, LLC DATE 3/09
MICRO-FILM INFORMATION
RECORDED BY DATE
NO.

BENCH MARKS
ACS BRASS CAP STAMPED 19-H11
STATION "19-H11", ELEV=5107.965' (NGVD1988)

SURVEY INFORMATION
FIELD NOTES
NO. 1 BY THOMAS D. JOHNSTON DATE 8/6/06

ENGINEER'S SEAL
GUY C. JACKSON NEW MEXICO 13289 REGISTERED PROFESSIONAL ENGINEER

NO. DATE REMARKS BY
REVISIONS
DESIGN
DESIGNED BY GJA DATE 8-07
DRAWN BY GJA DATE 8-07
CHECKED BY GJA DATE 8-07

GJA Guy Jackson & Associates LLC
Civil Engineering for Commercial and Residential Development

CITY OF ALBUQUERQUE
PUBLIC WORKS DEPARTMENT
ENGINEERING DEVELOPMENT GROUP

TITLE: IMPROVEMENT FOR CENTRAL 7TH DAY ADVENTIST CHURCH
ENLARGED PAVING PLAN - SHEET 2

DESIGN REVIEW COMMITTEE: APPROVED NOV 20 2007 DESIGN REVIEW COMMITTEE
CITY ENGINEER APPROVAL: APPROVED SEP 26 2008 CITY ENGINEER
LAST DESIGN UPDATE
MO./DAY/YR. MO./DAY/YR.

CITY PROJECT NO. 567682
ZONE MAP NO. H-11
SHEET 5 OF 10

SCANNED BY PLANNING

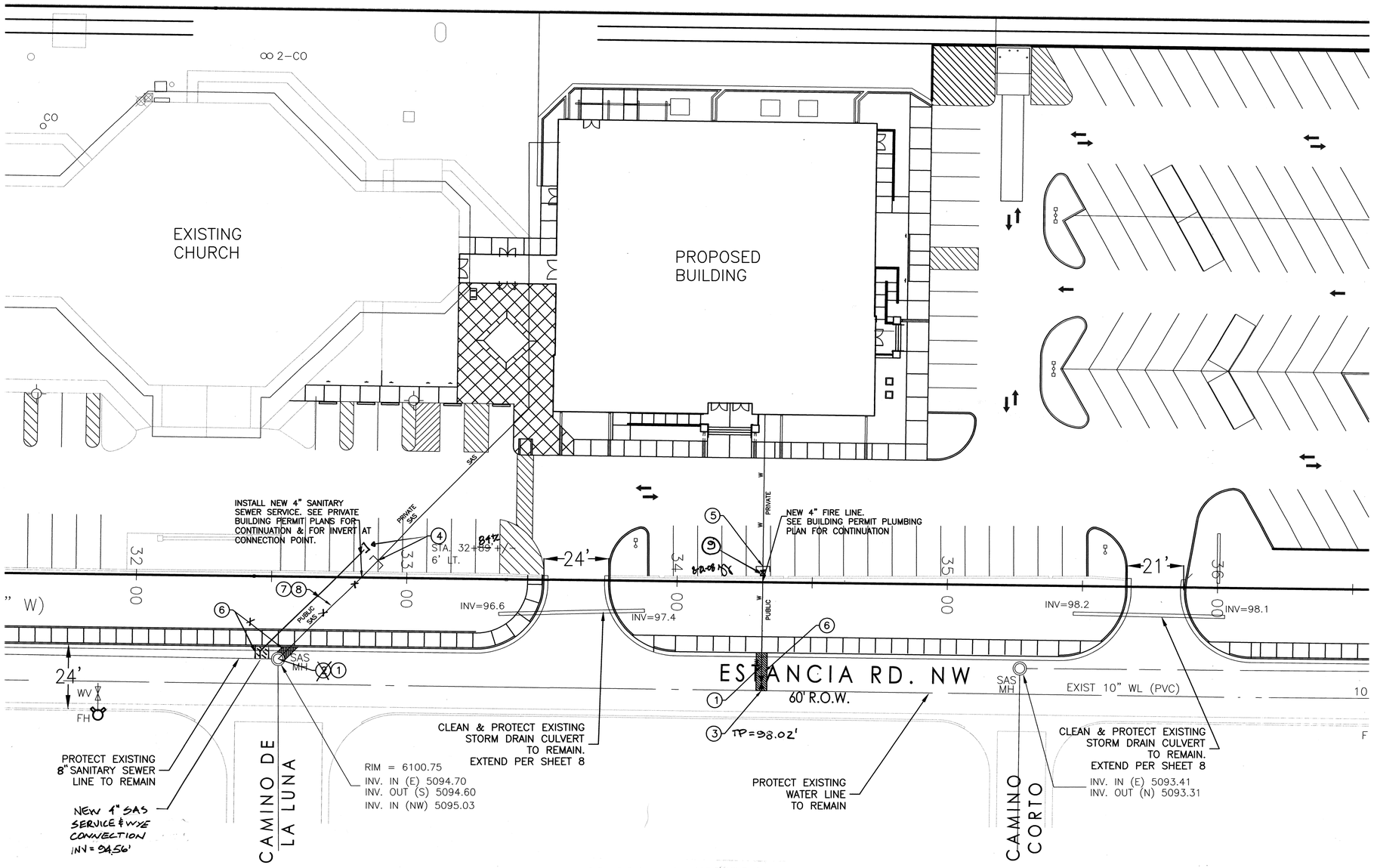

GENERAL NOTES:

A. THE CONTRACTOR SHALL FIELD VERIFY ALL EXISTING UTILITY LOCATIONS AND NOTIFY THE ENGINEER IMMEDIATELY OF ANY DISCREPANCIES.

B. CONTRACTOR IS TO SAW CUT, REMOVE AND REPLACE THE EXISTING ASPHALT PAVEMENT AT A DIMENSION OF 1'-00" BEYOND THE LIP OF THE NEW GUTTER.

C. CONTRACTOR IS RESPONSIBLE FOR ALL REPAIR AND/OR REPLACEMENT OF ALL UTILITY CONDUITS AND EXISTING LINES.

D. ANY ADDITIONAL GRADING REQUIRED TO MATCH PROPOSED STREET GRADES SHALL BE INCIDENTAL TO PAVING ITEMS.

E. CONTRACTOR SHALL PARK EQUIPMENT AND VEHICLES AS NOT TO INTERFERE WITH NORMAL ACTIVITIES OF OTHER CONTRACTORS ON SITE.

F. ANY DAMAGE TO THE EXISTING FACILITIES (CURB & GUTTER, PAVEMENT, CONDUITS, IRRIGATION, LANDSCAPING, UTILITY LINES, ETC.,) DURING CONSTRUCTION SHALL BE REPLACED AT THE CONTRACTORS EXPENSE.

G. TOPOGRAPHICAL & BOUNDARY SURVEY PROVIDED BY THOMAS JOHNSTON, LS#14269. GJA IS NOT RESPONSIBLE FOR ANY DISCREPANCIES IN THE SURVEYS.

H. CONTRACTOR TO ADJUST ALL EXISTING VALVE COVERS, MANHOLES, GRATES TO NEW GRADES WHERE APPLICABLE.

CONSTRUCTION NOTES:

1. REMOVE EXISTING ASPHALT AS NECESSARY, INSTALL UTILITY TRENCHING PER COA STD DWG 2465.
2. ~~CONNECT~~ NEW 4" SANITARY ~~SEWER~~ SERVICE TO ~~EXISTING SEWER~~ MANHOLE PER ~~COA~~ STD DWG 2118.
3. CONNECT NEW 4" FIRE LINE TO EXISTING 10" WATER LINE PER COA STD DWG 2301. INSTALL 4"X10" TAPPING SLEEVE WITH 4" GATE VALVE, BOX & LID. RESTRAIN CONNECTION (PRESSURE CONNECTION).
4. INSTALL 4" CAP @ END OF PUBLIC SAS.
5. INSTALL 4" CAP & BLOCKING @ END OF PUBLIC WATERLINE STUB.
6. SAW CUT, REMOVE & REPLACE ASPHALT PAVING WITH PAVING SECTION #2 SHOWN ON SHEET 3.
7. CONTRACTOR TO INSTALL CAUTION TAPE 9" ABOVE PIPE.
8. OWNER TO MARK ALIGNMENT ABOVE GROUND, ONCE CONSTRUCTED.
9. INSTALL 1-4" GATE VALVE WITH BOX & LID PER COA STD. DWGS 2326 & 2328 8-21-08
10. SEE SHEET 3 OF 10 FOR REMOVAL & REPLACEMENT OF WATER SERVICE.

I Guy C. Jackson, registered NM Civil Engineer, #13289, do hereby certify that to the best of my knowledge and belief that the as-built information for the site provided by Way John Surveyors (Thomas Johnston –NMPS #14269) provided on 1/16/09 appears to be constructed within substantial compliance of the approved Work Order Plans. All vertical and horizontal information should be field verified prior to use on future projects.

Guy C. Jackson NMPE#13289

GUY C. JACKSON NEW MEXICO 13289 REGISTERED PROFESSIONAL ENGINEER 10-03-09

LEGEND & ABBREVIATIONS:

———	PROPERTY LINE = CONSTRUCTION BASELINE
W	PROPOSED 4" WATER LINE
SAS	PROPOSED 4" SANITARY SEWER SERVICE LINE

N

UTILITY PLAN

SCALE

0 10' 20' 40' 60'

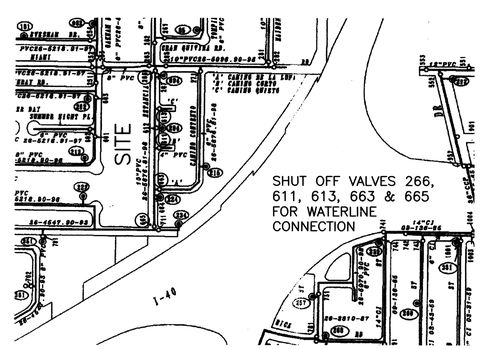

WATER SHUT-OFF PLAN

GJA Guy Jackson & Associates LLC
Civil Engineering for Commercial and Residential Development

AS-BUILT INFORMATION
CONTRACTOR RIO WEST DATE 10/08
WORK INSPECTOR'S ACCEPTANCE BY WAYJOHN SURVEYING CO. DATE 10/08
ACCEPTANCE BY GJA, LLC DATE 3/09
FIELD VERIFICATION BY RIO WEST DATE 11/09
DRAWINGS CORRECTED BY GJA, LLC DATE 3/09
MICRO-FILM INFORMATION
RECORDED BY DATE
NO.

BENCH MARKS
ACS BRASS CAP STAMPED 19-H11
STATION "19-H11", ELEV=5107.965' (NGVD1988)

SURVEY INFORMATION
FIELD NOTES

NO.	BY	DATE
1	THOMAS D. JOHNSTON	8/6/06

ENGINEER'S SEAL
GUY C. JACKSON NEW MEXICO 13289 REGISTERED PROFESSIONAL ENGINEER

NO.	DATE	REMARKS	BY
		REVISIONS	
		DESIGN	

DESIGNED BY GJA DATE 8-07
DRAWN BY GJA DATE 8-07
CHECKED BY GJA DATE 8-07

CITY OF ALBUQUERQUE
PUBLIC WORKS DEPARTMENT
ENGINEERING DEVELOPMENT GROUP

TITLE: IMPROVEMENT FOR CENTRAL 7TH DAY ADVENTIST CHURCH
UTILITY PLAN

DESIGN REVIEW COMMITTEE: APPROVED NOV 20 2007 DESIGN REVIEW COMMITTEE
CITY ENGINEER APPROVAL: APPROVED SEP 26 2008 CITY ENGINEER
LAST DESIGN UPDATE | MO./DAY/YR. | MO./DAY/YR.

CITY PROJECT NO.	ZONE MAP NO.	SHEET	OF
567682	H-11	6	10

SCANNED BY PLANNING

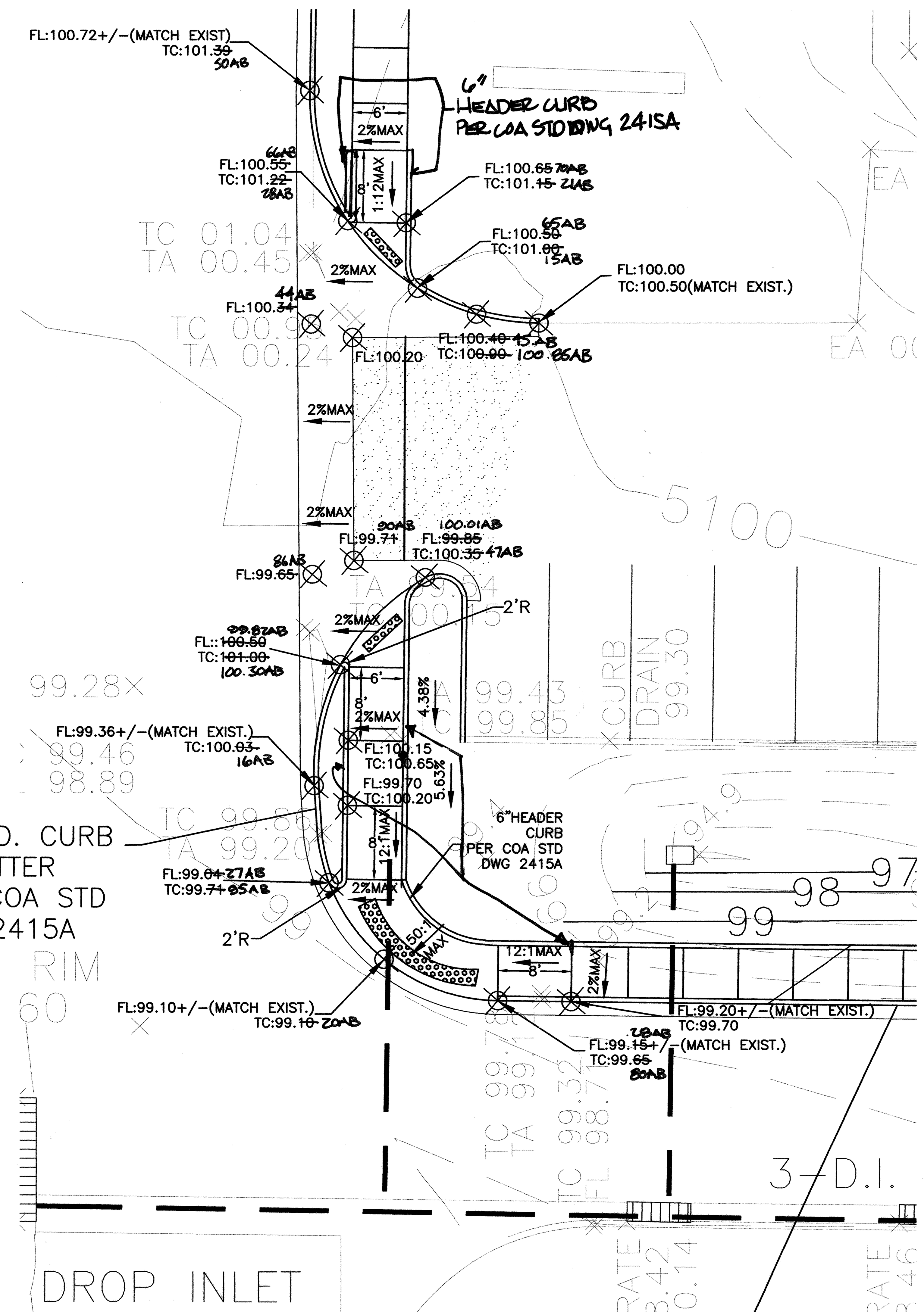

DETAIL 1

6" DEPRESSED MEDIAN CURB & GUTTER PER MODIFIED COA STD. DWG 2415A (SEE SHEET 3)

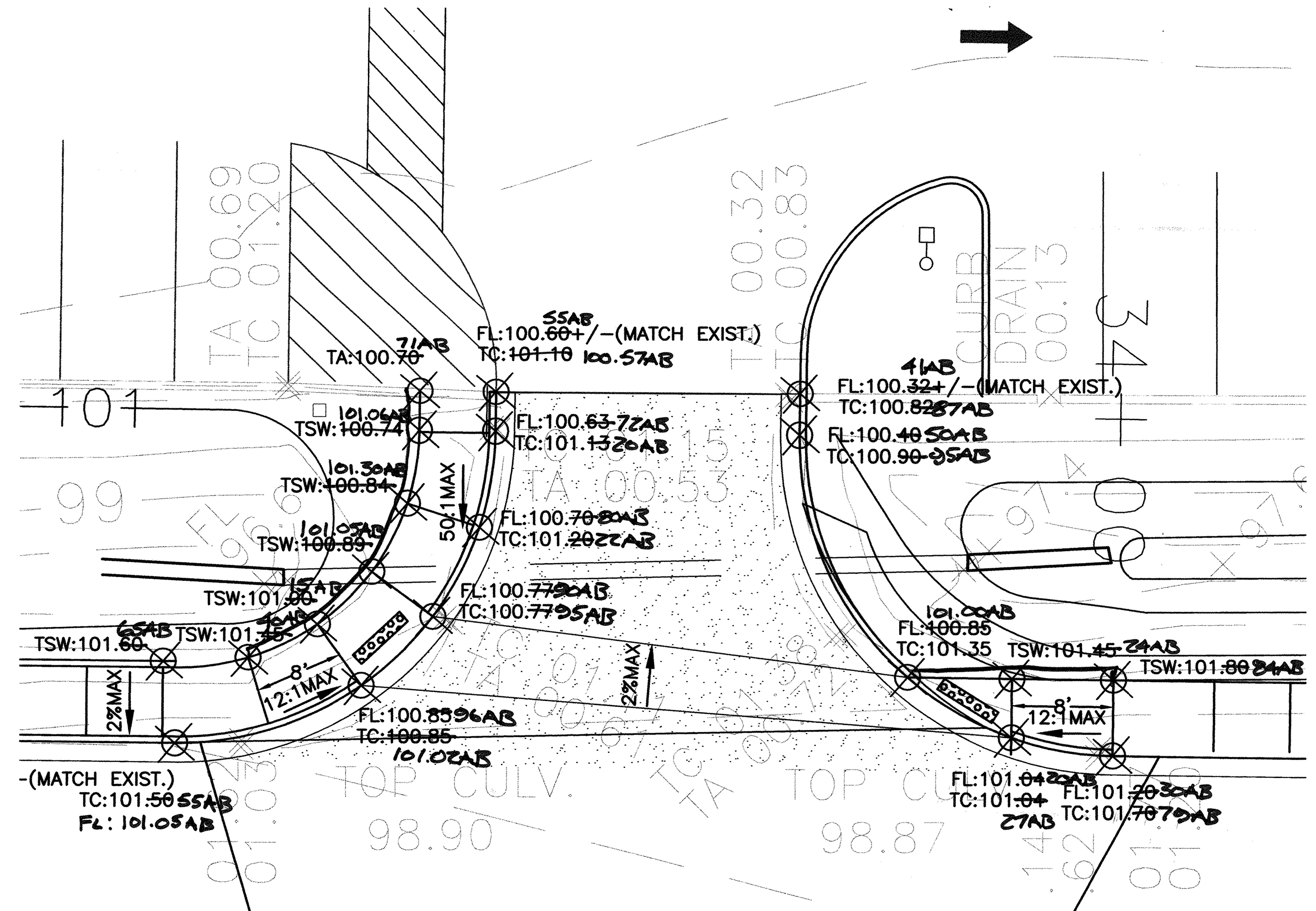

DETAIL 2

6" DEPRESSED MEDIAN CURB & GUTTER PER MODIFIED COA STD. DWG 2415A (SEE SHEET 3)

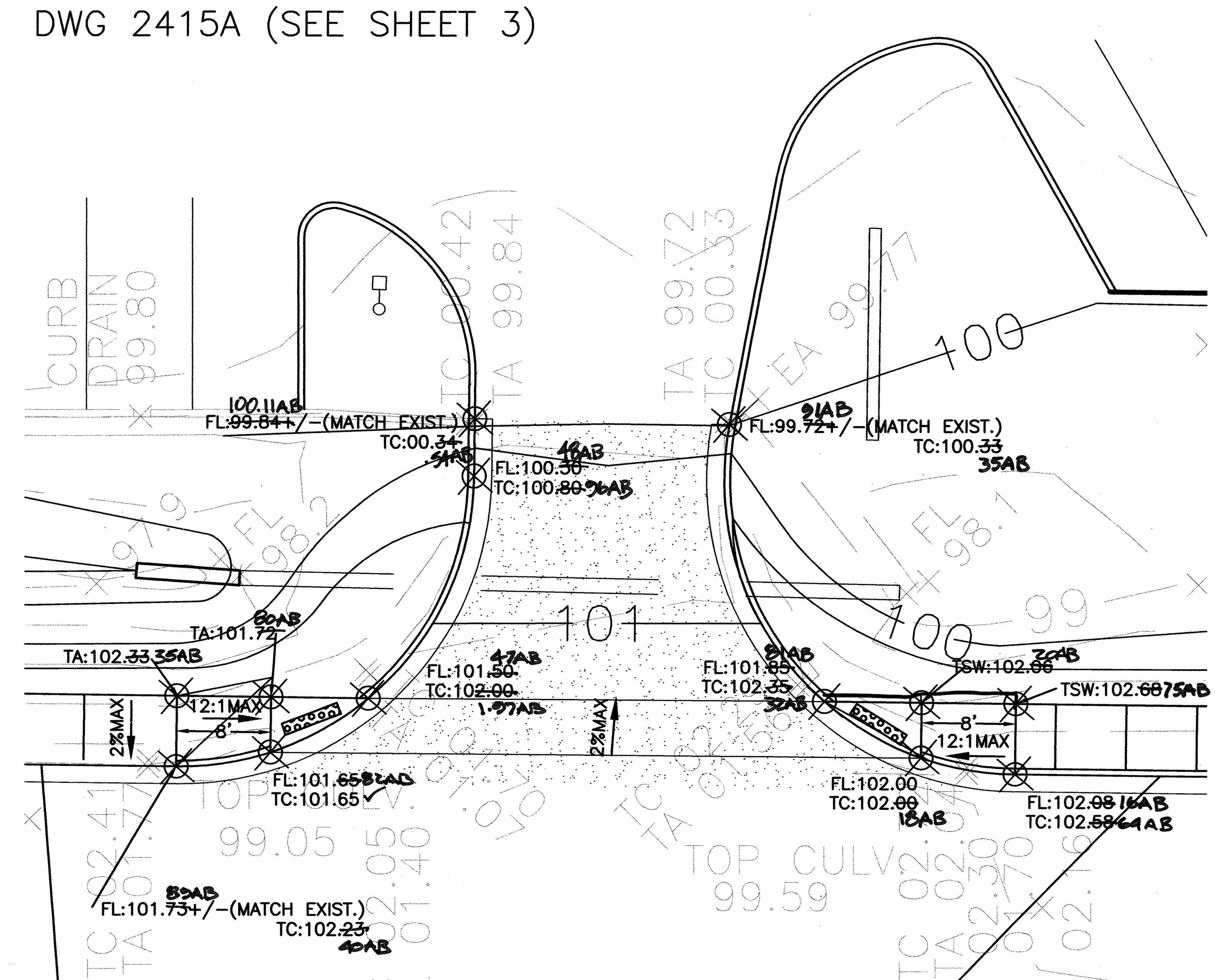

DETAIL 3

6" DEPRESSED MEDIAN CURB & GUTTER PER MODIFIED COA STD. DWG 2415A (SEE SHEET 3)

PAVING LIMITS *PER PAVING DETAILS (SHEET 3)* IN DRIVEWAYS

TRUNCATED DOMES (DETECTABLE WARNING SURFACE)

DETAIL SHEET

SCALE

0 5' 10' 20' 30'

I Guy C. Jackson, registered NM Civil Engineer, #13289, do hereby certify that to the best of my knowledge and belief that the as-built information for the site provided by Way John Surveyors (Thomas Johnston -NMPS #14269) provided on 1/16/09 appears to be constructed within substantial compliance of the approved Work Order Plans. All vertical and horizontal information should be field verified prior to use on future projects.

Guy C. Jackson NMPE#13289

GUY C. JACKSON NEW MEXICO 13289 REGISTERED PROFESSIONAL ENGINEER

AS-BUILT INFORMATION
CONTRACTOR RIO WEST DATE 10/08
STAKED BY WAYJOHN SURVEYING CO. DATE 10/08
INSPECTOR'S ACCEPTANCE BY GJA, LLC DATE 3/09
FIELD VERIFICATION BY RIO WEST DATE 1/09
DRAWINGS CORRECTED BY GJA, LLC DATE 3/09

MICRO-FILM INFORMATION
RECORDED BY DATE
NO.

BENCH MARKS
ACS BRASS CAP STAMPED 19-H11
STATION "19-H11", ELEV=5107.965' (NGVD1988)

SURVEY INFORMATION

FIELD NOTES		
NO.	BY	DATE
1	THOMAS D. JOHNSTON	8/6/06

ENGINEER'S SEAL

NO.	DATE	REMARKS / REVISIONS / DESIGN	BY

DESIGNED BY GJA DATE 8-07
DRAWN BY GJA DATE 8-07
CHECKED BY GJA DATE 8-07

GJA Guy Jackson & Associates LLC
Civil Engineering for Commercial and Residential Development

CITY OF ALBUQUERQUE
PUBLIC WORKS DEPARTMENT
ENGINEERING DEVELOPMENT GROUP

TITLE: IMPROVEMENT FOR CENTRAL 7TH DAY ADVENTIST CHURCH
DETAIL SHEET

DESIGN REVIEW COMMITTEE	CITY ENGINEER APPROVAL		MO./DAY/YR.	MO./DAY/YR.
APPROVED NOV 20 2007 DESIGN REVIEW COMMITTEE	APPROVED SEP 26 2008 CITY ENGINEER	LAST DESIGN UPDATE		

CITY PROJECT NO.	ZONE MAP NO.	SHEET	OF
567682	H-11	7	10

SCANNED BY PLANNING

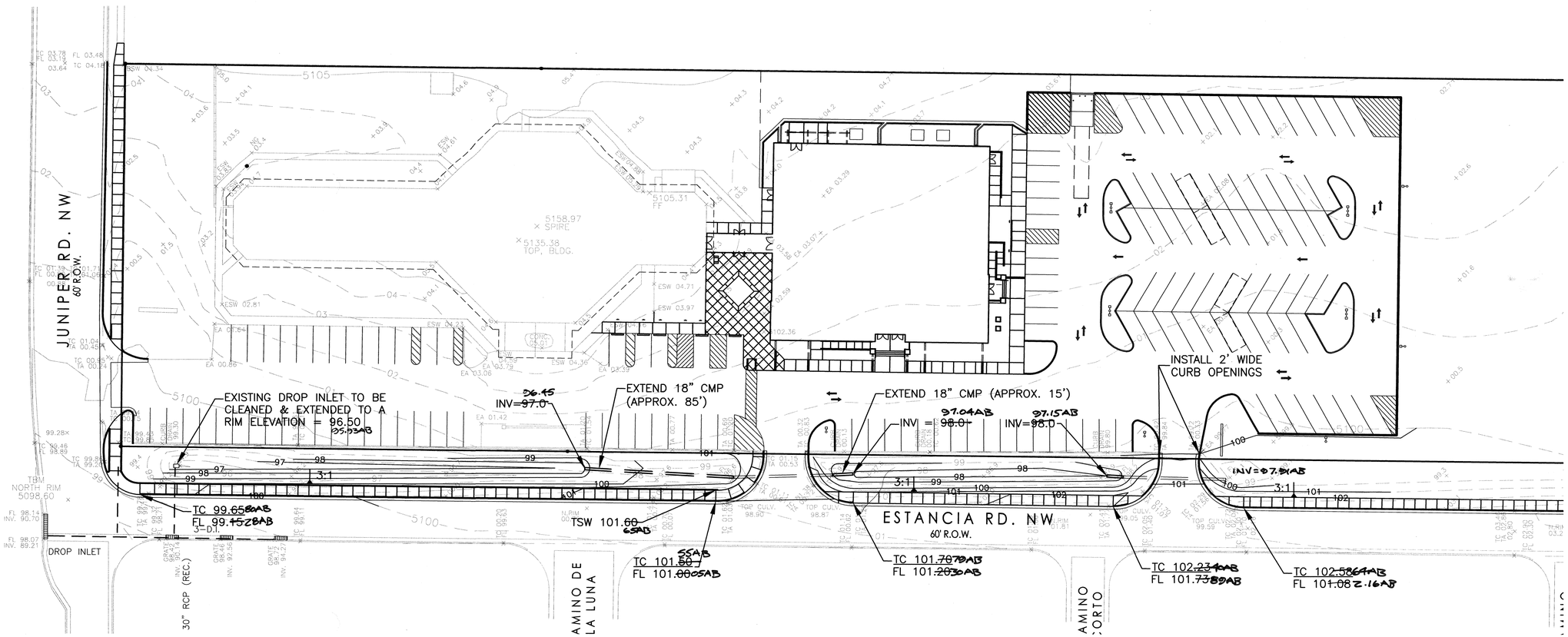

GENERAL NOTES:

A. THE CONTRACTOR SHALL FIELD VERIFY ALL EXISTING UTILITY LOCATIONS AND NOTIFY THE ENGINEER IMMEDIATELY OF ANY DISCREPANCIES.

B. CONTRACTOR IS TO SAW CUT, REMOVE AND REPLACE THE EXISTING ASPHALT PAVEMENT AT A DIMENSION OF 1'-00" BEYOND THE LIP OF THE NEW GUTTER.

C. CONTRACTOR IS RESPONSIBLE FOR ALL REPAIR AND/OR REPLACEMENT OF ALL UTILITY CONDUITS AND EXISTING LINES.

D. ANY ADDITIONAL GRADING REQUIRED TO MATCH PROPOSED STREET GRADES SHALL BE INCIDENTAL TO PAVING ITEMS.

E. CONTRACTOR SHALL PARK EQUIPMENT AND VEHICLES AS NOT TO INTERFERE WITH NORMAL ACTIVITIES OF OTHER CONTRACTORS ON SITE.

F. ANY DAMAGE TO THE EXISTING FACILITIES (CURB & GUTTER, PAVEMENT, CONDUITS, IRRIGATION, LANDSCAPING, UTILITY LINES, ETC.,) DURING CONSTRUCTION SHALL BE REPLACED AT THE CONTRACTORS EXPENSE.

G. TOPOGRAPHICAL & BOUNDARY SURVEY PROVIDED BY THOMAS JOHNSTON, LS#14269. GJA IS NOT RESPONSIBLE FOR ANY DISCREPANCIES IN THE SURVEYS.

H. CONTRACTOR TO ADJUST ALL EXISTING VALVE COVERS, MANHOLES, GRATES TO NEW GRADES WHERE APPLICABLE.

I. WHEEL CHAIR RAMPS SHALL BE DESIGNED & CONSTRUCTED IN ACCORDANCE W/ADA GUIDELINES. SUBMIT SPEC.'S TO COA CONSTRUCTION ENGINEER FOR EVALUATION PRIOR TO CONSTRUCTION.

ROW GRADING PLAN

SCALE

0 15' 30' 60' 90'

AS-BUILT CERTIFICATION

I Guy C. Jackson, registered NM Civil Engineer, #13289, do hereby certify that to the best of my knowledge and belief that the as-built information for the site provided by Way John Surveyors (Thomas Johnston –NMPS #14269) provided on 1/16/09 appears to be constructed within substantial compliance of the approved Work Order Plans. All vertical and horizontal information should be field verified prior to use on future projects.

Guy C. Jackson NMPE#13289

GUY C. JACKSON NEW MEXICO 13289 REGISTERED PROFESSIONAL ENGINEER

AS-BUILT INFORMATION

CONTRACTOR: RIO WEST DATE 10/08
WORK ORDER BY: WAY JOHN SURVEYORS DATE 10/08
INSPECTOR'S ACCEPTANCE BY: GJA, LLC DATE 3/09
FIELD VERIFICATION BY: RIO WEST DATE 1/09
DRAWINGS CORRECTED BY: GJA, LLC DATE 3/09

MICRO-FILM INFORMATION

RECORDED BY DATE
NO.

BENCH MARKS

ACS BRASS CAP STAMPED 19-H11
STATION "19-H11", ELEV=5107.965' (NGVD1988)

SURVEY INFORMATION

FIELD NOTES

NO.	BY	DATE
1	THOMAS D. JOHNSTON	8/6/06

ENGINEER'S SEAL

GUY C. JACKSON NEW MEXICO 13289 REGISTERED PROFESSIONAL ENGINEER

NO.	DATE	REMARKS	BY
		REVISIONS	
		DESIGN	

DESIGNED BY GJA DATE 8-07
DRAWN BY GJA DATE 8-07
CHECKED BY GJA DATE 8-07

GJA Guy Jackson & Associates LLC
Civil Engineering for Commercial and Residential Development

CITY OF ALBUQUERQUE
PUBLIC WORKS DEPARTMENT
ENGINEERING DEVELOPMENT GROUP

TITLE: IMPROVEMENT FOR CENTRAL 7TH DAY ADVENTIST CHURCH
ROW GRADING PLAN

DESIGN REVIEW COMMITTEE: APPROVED NOV 20 2007 DESIGN REVIEW COMMITTEE

CITY ENGINEER APPROVAL: APPROVED SEP 26 2008 CITY ENGINEER

LAST DESIGN UPDATE | MO./DAY/YR. | MO./DAY/YR.

CITY PROJECT NO.	ZONE MAP NO.	SHEET	OF
567682	H-11	8	10

SCANNED BY PLANNING

CONSTRUCTION NOTES

1. TWO WORKING DAYS PRIOR TO ANY EXCAVATION, THE CONTRACTOR SHALL CALL FOR LOCATION OF EXISTING UTILITIES.
2. ALL WORK WITHIN THE CITY RIGHT-OF-WAY SHALL BE PERFORMED IN ACCORDANCE WITH THE APPLICABLE CITY OF ALBUQUERQUE STANDARDS AND PROCEDURES.
3. ALL WORK SHALL BE PERFORMED IN ACCORDANCE WITH THE APPLICABLE FEDERAL, STATE, AND LOCAL REGULATIONS, LAWS, AND RULES CONCERNING SAFETY AND HEALTH.
4. PRIOR TO CONSTRUCTION THE CONTRACTOR SHALL VERITY THE EXISTING SITE CONDITIONS AND INFORM THE ARCHITECT/ ENGINEER OF ANY DISCREPANCY BETWEEN THE INFORMATION SHOWN ON THE PLANS AND THOSE OF THE EXISTING SITE.
5. THE CONTRACTOR SHALL PROVIDE THE ARCHITECT / ENGINEER WITH AN AS BUILT SURVEY FOR ENGINEER'S CERTIFICATION AT PROJECT COMPLETION.
6. THE CONTRACTOR SHALL MAINTAIN A RECORD DRAWING SET OF PLANS AND PROMPTLY LOCATE EXISTING AND NEW ELEVATIONS (FINISH FLOORS, TOPS OF CURBS AND ASPHALT, FLOW LINE, PIPE INVERTS, ETC.), ON THE RECORD SET. THE RECORD SET SHALL BE MAINTAINED ON THE PROJECT SITE AND SHALL BE AVAILABLE TO THE OWNER AND ARCHITECT AT ANY TIME DURING CONSTRUCTION. UPON COMPLETION OF THE PROJECT, THE RECORD SET SHALL BE TURNED OVER TO THE OWNER.
7. THE OWNER / CONTRACTOR SHALL SUBMIT A NOTICE OF INTENT (NOI) TO THE EPA PRIOR TO BEGINNING OF CONSTRUCTION.
8. CONTRACTOR SHALL COMPLY WITH STORM WATER POLLUTION PREVENTION PLAN (SWPPP) SPECIFIC TO THIS PROJECT.
9. ASPHALT PAVING TO BE 2" ASPHALT OVER 4" COMPACTED BASE COURSE, REFER TO GEOTECHNICAL REPORT OF ADDITIONAL REQUIREMENTS.

FACILITY ACCESSIBILITY

ALL SURFACES ALONG THE ACCESSIBLE ROUTE SHALL COMPLY WITH ANSI A117-1998.

WALKING SURFACES SHALL BE STABLE, FIRM, AND SLIP RESISTANT. THE RUNNING SLOPE OF WALKING SURFACES SHALL NOT BE STEEPER THAN 1:20 WITH A CROSS SLOPE NOT STEEPER THAN 1:48.

CURB RAMP AND RAMP RUNS SHALL HAVE A RUNNING SLOPE NOT STEEPER THAN 1:12 WITH A CROSS SLOPE NOT STEEPER THAN 1:48. COUNTER SLOPES OF ADJOINING GUTTERS AND ROAD SURFACES IMMEDIATELY ADJACENT TO THE CURB RAMP OR ACCESSIBLE ROUTE SHALL NOT BE STEEPER THAN 1:20. TRANSITIONS FROM RAMPS TO WALKS, GUTTERS OR STREETS SHALL BE AT THE SAME LEVEL. WHERE PEDESTRIANS MUST WALK ACROSS A CURB RAMP, THE RAMP SHALL HAVE FLARED SIDES WITH SLOPES NOT STEEPER THAN 1:10: WHERE THE TOP OF THE RAMP PARALLEL TO THE RUN OF THE RAMP IS LESS THAN 48 INCHES WIDE, THE FLARED SIDES SHALL HAVE A SLOPE NOT STEEPER THAN 1:12.

HANDICAP PARKING SPACES AND ACCESS AISLES SHALL HAVE SURFACE SLOPES NOT STEEPER THAN 1:48. ACCESS AISLES SHALL BE AT THE SAME LEVEL AS THE PARKING SPACES THEY SERVE.

TRAFFIC CONTROL

THE CONTRACTOR SHALL PROVIDE ALL REQUIRED TRAFFIC CONTROL PLANS AND DEVICES. ALL SIGNS, BARRICADES, CHANNELIZATION DEVICES, SIGN FRAMES AND ERECTION OF SUCH DEVICES SHALL CONFORM THE THE REQUIREMENTS OF THE "MANUAL OF UNIFORM TRAFFIC CONTROL DEVICES FOR STREETS AND HIGHWAYS" LATEST EDITION. PRIOR TO CONSTRUCTION PRIOR TO CONSTRUCTION, THE TRAFFIC CONTROL PLAN SHALL BE SUBMITTED AND APPROVED BY THE GOVERNING AUTHORITY.

DRAINAGE PLAN

THE PROPOSED IMPROVEMENTS AS SHOWN BY THE VICINITY MAP, ARE LOCATED AT THE CORNER OF ESTANCIA AND JUNIPER. THE SITE IS DEVELOPED AND SLOPES TO THE EAST TO THE EXISTING DRAINAGE POND AND CATCH BASIN LOCATED AT THE SOUTH EAST CORNER OF THE SITE. ACCORDING TO FIRM PANEL 0327D THE SITE DOES NOT LIE WITHIN A FLOOD HAZARD ZONE. THE SITE IS HIGHER THAN THE LANDS TO THE NORTH. THE LANDS TO THE WEST ARE DEVELOPED AND FLOWS AWAY FROM THE SITE. THE EXISTING CURB AND GUTTER ALONG JUNIPER AND ESTANCIA BLOCK FLOWS FROM THE SOUTH AND EAST. THEREFORE OFFSITE FLOWS ARE CONSIDERED INSIGNIFICANT.

THE PROPOSED IMPROVEMENTS CONSIST OF AN ADDITION TO THE EXISTING CHURCH WITH ASSOCIATED PARKING AND LANDSCAPING. AS SHOWN BY THE CALCULATION THE PROPOSED DEVELOPMENT WILL INCREASE THE RATE AND VOLUME OF RUNOFF. THE PROPOSED RATE OF DISCHARGE IS 17.4 CFS (3.5 CFS/ACRE). NO PONDING IS ANTICIPATED FOR THE SITE.

THE CALCULATIONS ANALYZE THE EXISTING AND PROPOSED CONDITIONS FOR 6-HOUR, 100 YEAR RAINFALL EVENT. THE ANALYSIS IS IN ACCORDANCE WITH THE CITY OF ALBUQUERQUE DEVELOPMENT PROCESS MANUAL VOLUME II.

CALCULATIONS

PRECIPITATION ZONE = 1
TOTAL SITE AREA = 5.0 ACRES

EXISTING CONDITIONS (BASED ON CURRENT DEVELOPMENT)
LAND TREATMENT A=36% B=26% D=38%
E = 0.66(0.36)+0.912(0.26)+2.36(0.38) = 1.37 INCHES
V = 1.37(5.0) / 12 = 0.571 ACRE FEET
Q = (1.87(0.36)+2.60(0.26)+5.02(0.38)) (5.0) = 16.3 CFS

EXISTING CONDITIONS (BASED PREVIOUS DRAINAGE PLAN)
LAND TREATMENT A=0% B=0% C=67% D=33%
E = 1.31 INCHES
Q = 16.8 CFS

DEVELOPED CONDITIONS
LAND TREATMENT A=36% B=17% D=47%
E = 0.66(0.36)+0.912(0.17)+2.36(0.47) = 1.52 INCHES
V = 1.52(5.0) / 12 = 0.627 ACRE FEET
Q = (1.87(0.36)+2.60(0.17)+5.02(0.47)) (5.0) = 17.4 CFS

INCREASE IN VOLUME OF RUNOFF = 0.057 ACRE FT
INCREASE IN RATE OF RUNOFF = 1.2 CFS

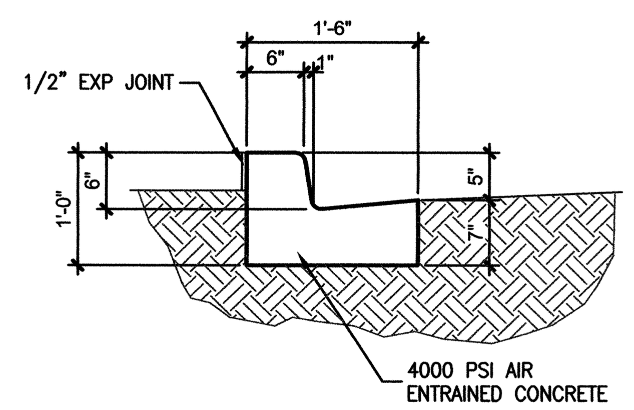

1 TYP CURB & GUTTER
3/4"=1'-0"

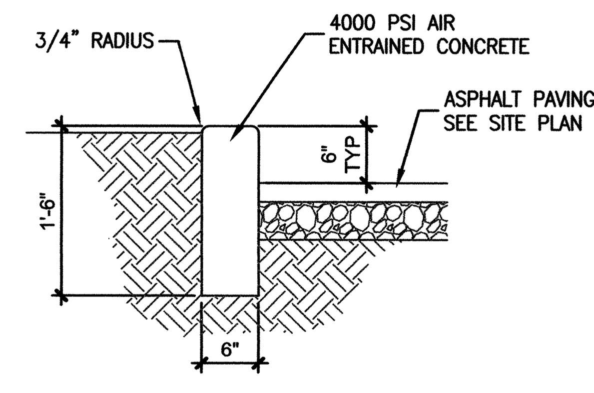

SEE GEOTECHNICAL REPORT FOR PAVING REQUIREMENTS

2 TYP STANDUP CURB
3/4"=1'-0"

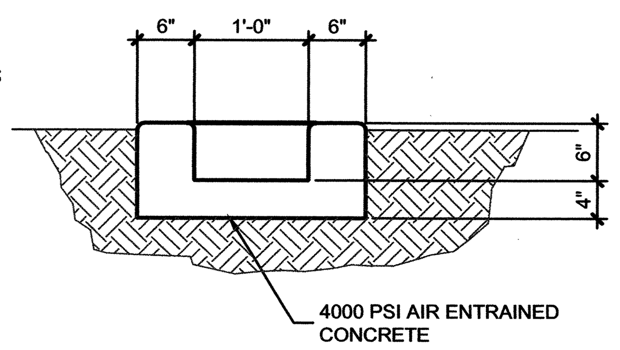

COORDINATE LOCATIONS WITH ROOF DRAIN AND DOWN SPOUT LOCATIONS.

3 TYP CONC CHANNEL
3/4"=1'-0"

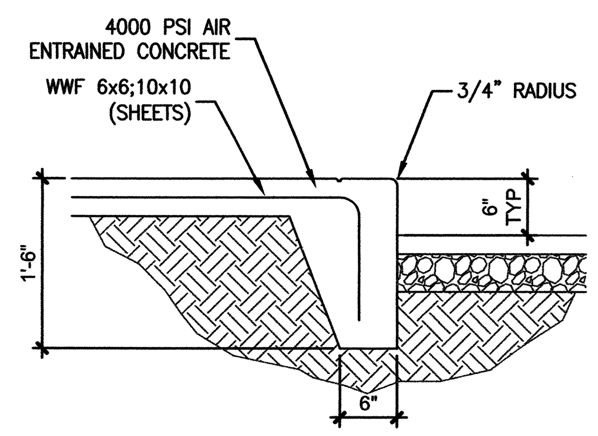

4 TYP SIDEWALK
3/4"=1'-0"

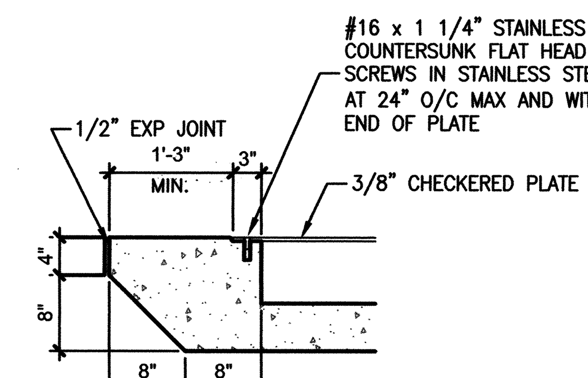

A SECTION

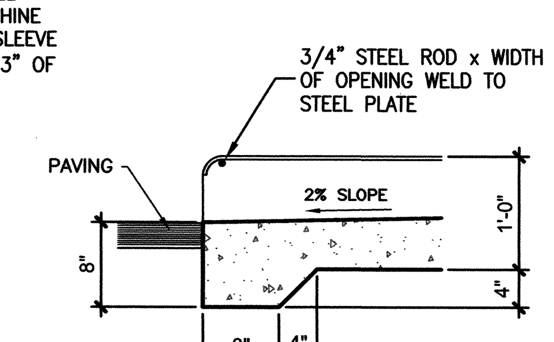

B SECTION

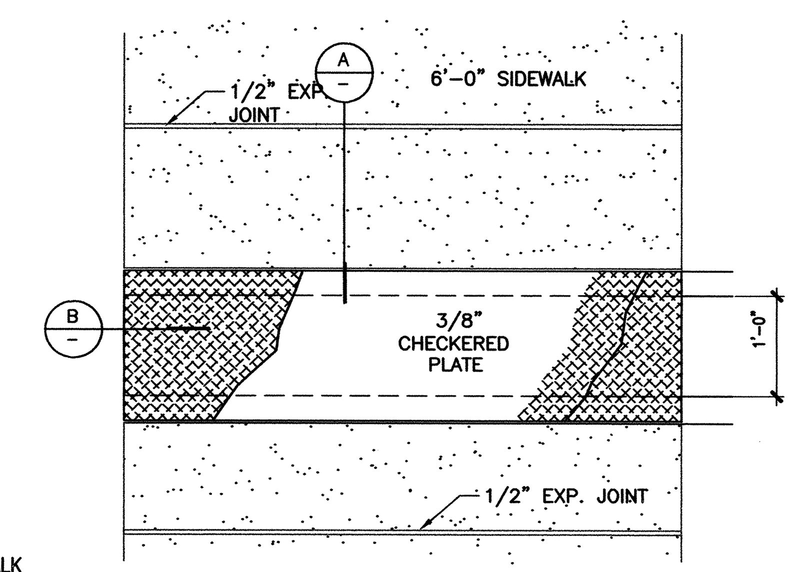

COORDINATE LOCATION OF SIDEWALK CULVERTS WITH ROOF DRAIN AND DOWN SPOUT LOCATIONS.

PLAN

5 SIDEWALK CULVERT
3/4"=1'-0"

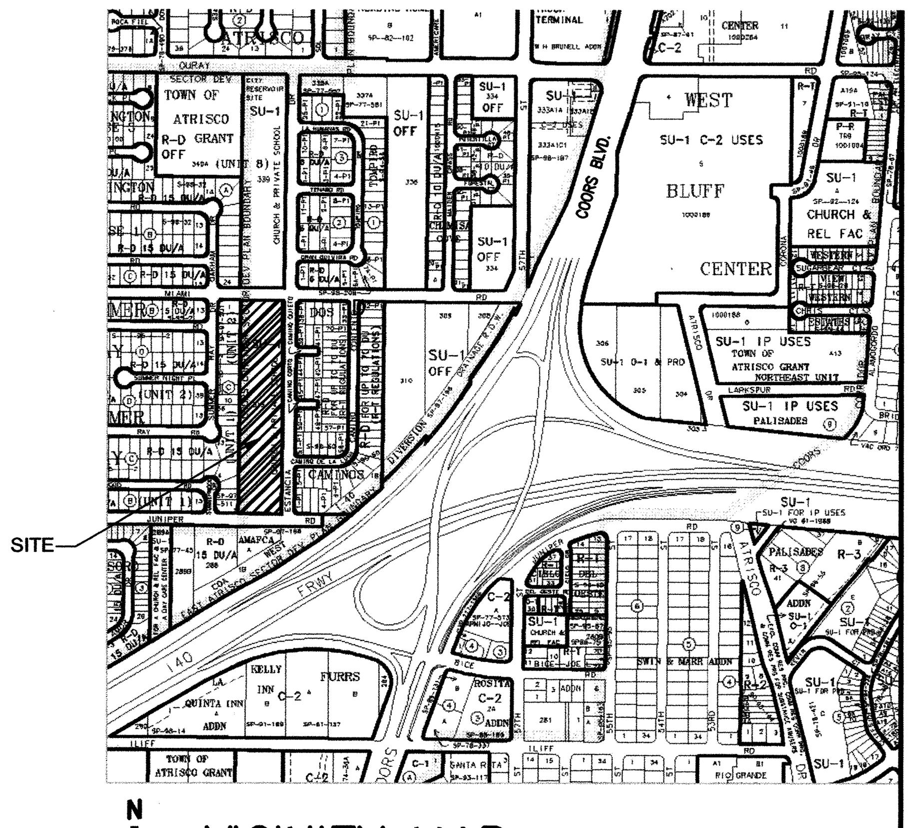

N
VICINITY MAP
Zone Map H-11
FILE: H-11/D060
0 125' 250' 500'

LEGAL DESCRIPTION:
LOT 313 TOWN OF ATRISO GRANT UNIT 8
ADDRESS:
2201 ESTANCIA RD. NW, ALBUQUERQUE, NM 87120

LEGEND:

93.1	EXISTING SPOT ELEVATION	FL	FLOW LINE
		GND	GROUND
• 51.00	NEW SPOT ELEVATION	INV	INVERT
		TA	TOP OF ASPHALT
—51—	EXISTING CONTOUR	TC	TOP OF CURB
—51—	NEW CONTOUR	TG	TOP OF GRATE
		TS	TOP OF CONCRETE SLAB
	SWALE	TW	TOP OF WALL
✓	VERIFIED ELEVATION	TBM	TEMPORARY BENCH MARK
51.0	AS BUILT ELEVATION		GRAVEL
	BASIN BOUNDARY		ASPHALT PAVING
	PROPERTY LINE		CONCRETE

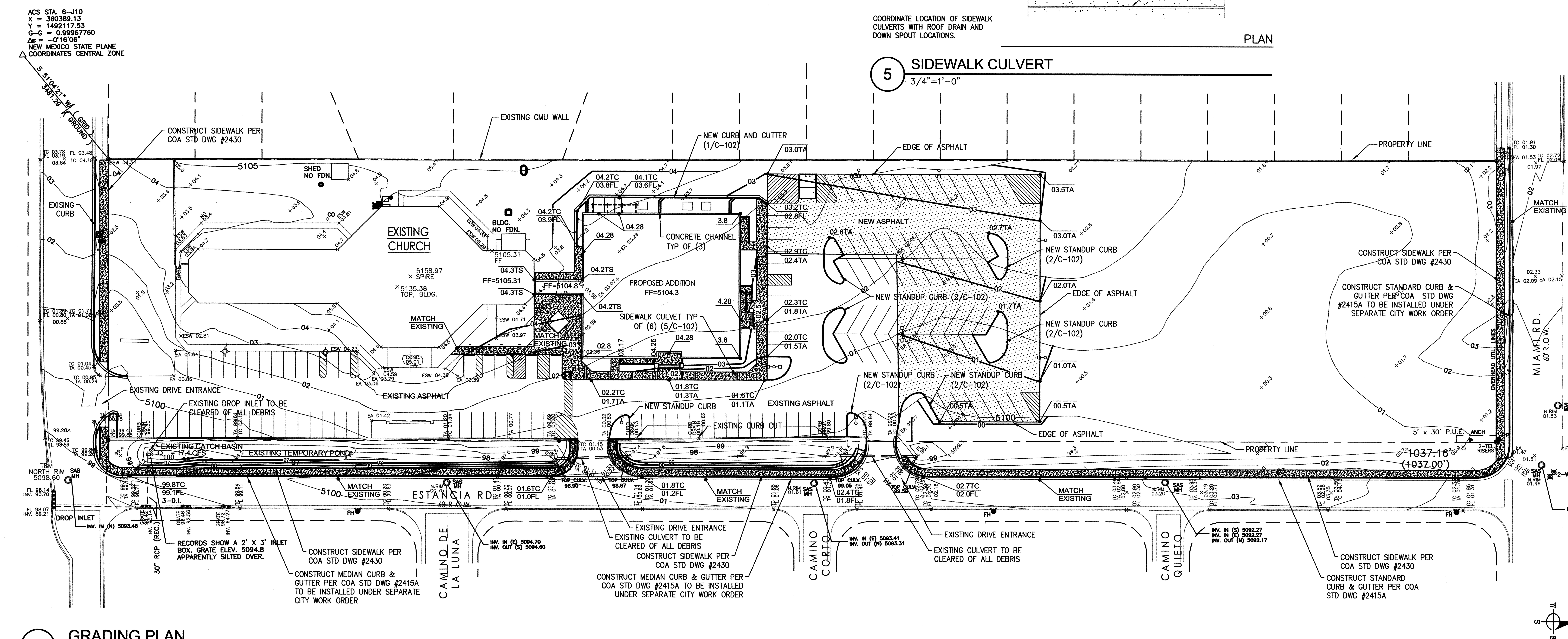

A1 GRADING PLAN
1"=40'-0"

FOR INFORMATION ONLY

j arthur blessen engineering
architect engineer
11930 Menual Suite 109
Albuquerque, NM 87112
(505) 293–1477

Addition to
Central Seventh Day Adventist Church
2201 Estancia Road NW
Albuquerque, NM
PROJ. # 06005

David West
Architect AIA
1504 Camino Ecuestre NW
Albuquerque NM 87107
ph/fax: 505-266-6416

JOHN ARTHUR BLESSEN NEW MEXICO 13481 REGISTERED PROFESSIONAL ENGINEER
ARCHITECT/ENGINEER SEAL

REVISIONS

GRADING PLAN

C-102

DATE FEBRUARY 16, 2007

SCANNED BY PLANNING

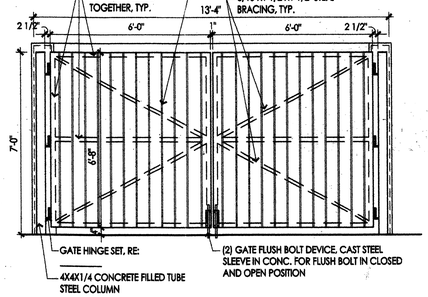

A1 ELEVATION DETAIL 3/8" = 1'-0"

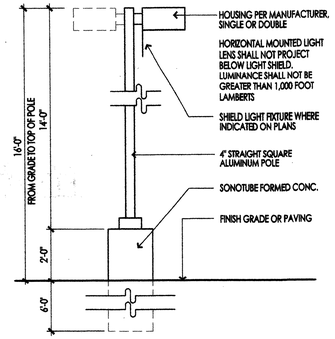

A2 PARKING LIGHT 3/8" = 1'-0"

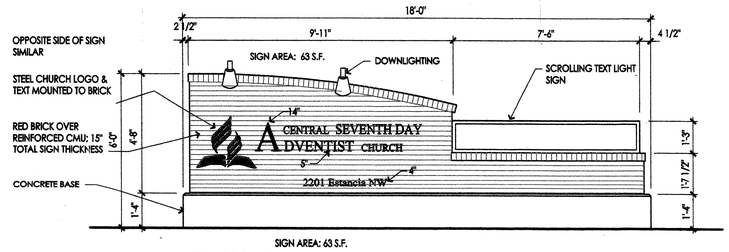

A3 SIGN 3/8" = 1'-0"

PROJECT NUMBER: 1005126

Application Number: 07DRB-00065

This plan is consistent with the specific Site Development Plan approved by the Environmental Planning Commission (EPC), dated NOVEMBER 17, 2006 and the Findings and Conditions in the Official Notification of Decision are satisfied.

Is an Infrastructure List required? [X] Yes [ ] No If yes, then a set of approved DRC plans with a work order is required for any construction within Public Right-of-Way or for construction of public improvements.

DRB SITE DEVELOPMENT PLAN SIGNOFF APPROVAL:

Traffic Engineering, Transportation Division	Date 2-21-07
Water Utility Department	Date
Parks and Recreation Department	Date 2/21/07
City Engineer	Date
Environmental Health Department (conditional) N/A	Date
Solid Waste Management	Date 1/16/07
DRB Chairperson, Planning Department	Date 2/21/07

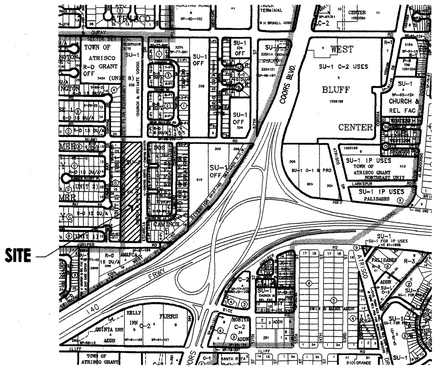

VICINITY MAP
Zone Map H-11

0 125' 250' 500'

PROJECT DATA

ADDRESS:
2201 ESTANCIA RD. NW, ALBUQUERQUE, NM 87120

AREAS:
TRACT AREA: 217,770 S.F. (5.0 ACRES)
EXISTING BUILDING AREA: 15,170 S.F.
NEW BUILDING AREA: 13,044 S.F.
TOTAL BLDG. AREA (EXISTING + NEW): 28,214 S.F.
F.A.R.: 0.13
EXISTING ASPHALT PARKING TO REMAIN: 39,285 SF
NEW ASPHALT PARKING: 20,430 SF
EXISTING CONCRETE WALKS TO REMAIN: 2,713 SF
NEW CONCRETE WALKS: 5,487 SF

ZONING:
ZONE MAP H-11
SU-1 FOR CHURCH & PRIVATE SCHOOL

HEIGHT
26 FEET, PER R-2 REGULATIONS, UNLESS MODIFIED BY PLANNING COMMISSION, 14-16-2-22 (D)

BUILDING SETBACKS:
FRONT YARD (JUNIPER RD.) SETBACK: 15 FEET
SIDE YARD SETBACK (ESTANCIA RD. & WEST PROPERTY LINE: 5 FEET PER UNDERLYING ZONE

OFF-STREET PARKING (PER 14-16-3-1(A)(3) OF ZONING CODE):
ONE SPACE FOR EACH FOUR SEATS IN MAIN ROOM (SANCTUARY). EACH 30 INCHES OF PEW SPACE IS CONSIDERED ONE SEAT (5,711" PEWS / 30" = 191 SEATS)

191 SEATS / 4 = 48 CAR SPACES REQ'D

CAR PARKING PROVIDED: ~~143~~ 142 SPACES (INCL. 10 HC SPACES)

HC PARKING: 3 HC SPACES REQUIRED FOR 36-50 REQUIRED CAR PARKING SPACES (ZONING CODE, 14-16-3-1 (F)(9))
IBC REQUIREMENTS ARE MORE STRINGENT:
8 HC SPACES REQUIRED FOR 101-300 PARKING SPACES PROVIDED, WITH ONE VAN ACCESSIBLE SPACE.

9 HC SPACES PROVIDED, INCL. 3 VAN ACCESSIBLE

BICYCLE PARKING: 1 SPACE PER EACH 20 REQUIRED CAR PARKING SPACES (TWO MINIMUM) (14-16-3-1 (B)(3)
48/20 = 2.4, OR 3 BICYCLE SPACES.

4 BICYCLE SPACES PROVIDED.

MOTORCYCLE PARKING: 2 SPACES REQUIRED FOR 101-150 CAR PARKING SPACES (14-16-3-1 (C)(1).

2 MOTORCYCLE SPACES PROVIDED.

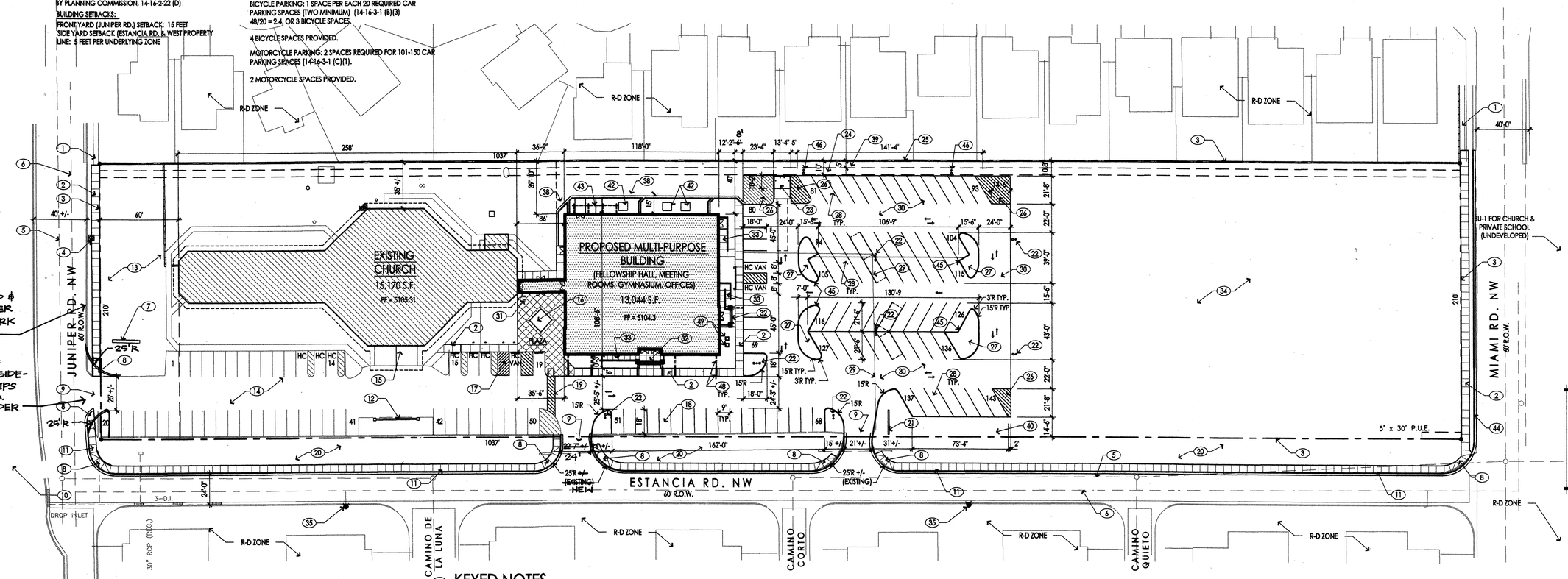

SITE PLAN
0 20' 40'
1" = 40'

KEYED NOTES

1. EXISTING 4' WIDE SIDEWALK.
2. NEW 6' WIDE SIDEWALK, PER C.O.A. WORK ORDER.
3. PROPERTY LINE.
4. EXISTING WATER METER.
5. EXISTING SANITARY SEWER MAIN.
6. EXISTING WATER MAIN.
7. EXISTING SIGN TO REMAIN.
8. NEW SIDEWALK RAMP, PER C.O.A. WORK ORDER.
9. EXISTING INGRESS/EGRESS.
10. BIKE TRAIL RECENTLY BUILT BY C.O.A. ON SOUTH SIDE OF JUNIPER.
11. NEW 6' SIDEWALK DIRECTLY BEHIND NEW MEDIAN CURB, PER C.O.A. WORK ORDER.
12. EXISTING SITE WALL TO REMAIN.
13. LANDSCAPED FRONT YARD, 15' MINIMUM BUFFER.
14. EXISTING PARKING TO REMAIN.
15. MAIN ENTRANCE TO EXISTING CHURCH.
16. PLANTER.
17. TWO NEW MOTORCYCLE PARKING SPACES.
18. RE-STRIPE EXISTING ASPHALT PARKING LOT.
19. PEDESTRIAN DRIVE AISLE CROSSING W/ PAINTED STRIPING ON EXISTING ASPHALT.
20. EXISTING PONDING AREA TO REMAIN.
21. NEW MONUMENT SIGN. REFER DETAIL A3 THIS SHEET.
22. POLE LIGHT. REFER DETAIL A2 THIS SHEET.
23. TRASH ENCLOSURE PER C.O.A. STANDARD SINGLE DUMPSTER ENCLOSURE REQUIREMENTS. REFER TO DETAIL A1 THIS SHEET.
24. 10' WIDE LANDSCAPE BUFFER.
25. EXISTING GRAY CMU SITE WALL. HEIGHT VARIES WITH SLOPE (6' HIGH TYPICALLY), FULL LENGTH OF WEST PROPERTY LINE.
26. STRIPED ASPHALT.
27. PLANTER BED OPENING IN ASPHALT PARKING LOT.
28. 60° DIAGONAL PARKING, PER D.P.M. FIG. 23.7.1, TYPICAL.
29. EDGE OF EXISTING ASPHALT PARKING LOT. EXISTING ASPHALT TO REMAIN IN THIS AREA, AND TO BE RE-STRIPED AS SHOWN.
30. NEW ASPHALT PARKING.
31. BIKE RACK, 4 SPACES.
32. STEPS UP TO BUILDING ENTRY.
33. RAMP UP TO BUILDING ENTRY.
34. AREA FOR FUTURE CHURCH EXPANSION.
35. EXISTING FIRE HYDRANT.
36. NOT USED.
37. NOT USED.
38. NEW CURB & GUTTER.
39. 5' WIDE MINIMUM BUILDING SETBACK.
40. NEW LANDSCAPED SIDE YARD, (6' MIN. BUFFER)
41. NOT USED.
42. GROUND-MOUNTED MECHANICAL UNIT.
43. TRELLIS STRUCTURE.
44. NEW MEDIAN CURB, PER C.O.A. WORK ORDER.
45. ASPHALT CURB.
46. POLE LIGHT W/ SHIELDED LIGHT FIXTURE (AT WEST SIDE OF PARKING LOT ONLY).
47. CONCRETE RUNDOWN FROM DOWNSPOUT TO CURB & GUTTER.
48. UNDERGROUND PVC PIPE FROM DOWNSPOUT TO SIDEWALK CULVERT.
49. CONDENSING UNITS ON CONCRETE PAD.

C.O.A PROJECT NO. 567682

FOR INFORMATION ONLY

Addition to
Central Seventh Day Adventist Church
2201 Estancia Road NW
Albuquerque, NM

David West
Architect
AIA
1504 Camino Ecuestre NW
Albuquerque NM 87107
ph/fax: 505-266-6416

STATE OF NEW MEXICO 1-15-07 DAVID PAUL WEST NO. 1206 REGISTERED ARCHITECT
ARCHITECT/ENGINEER SEAL

REVISIONS
DATE 1-15-07

SITE PLAN FOR BUILDING PERMIT

A001
10 OF 10