BERNALILLO COUNTY OF NEW MEXICO
PUBLIC WORKS DEPARTMENT
UTILITIES DIVISION

CONSTRUCTION PLANS
FOR

COORS PARK & DESERT PALMS SEWER PROJECT

SCANNED BY
MESA REPRO

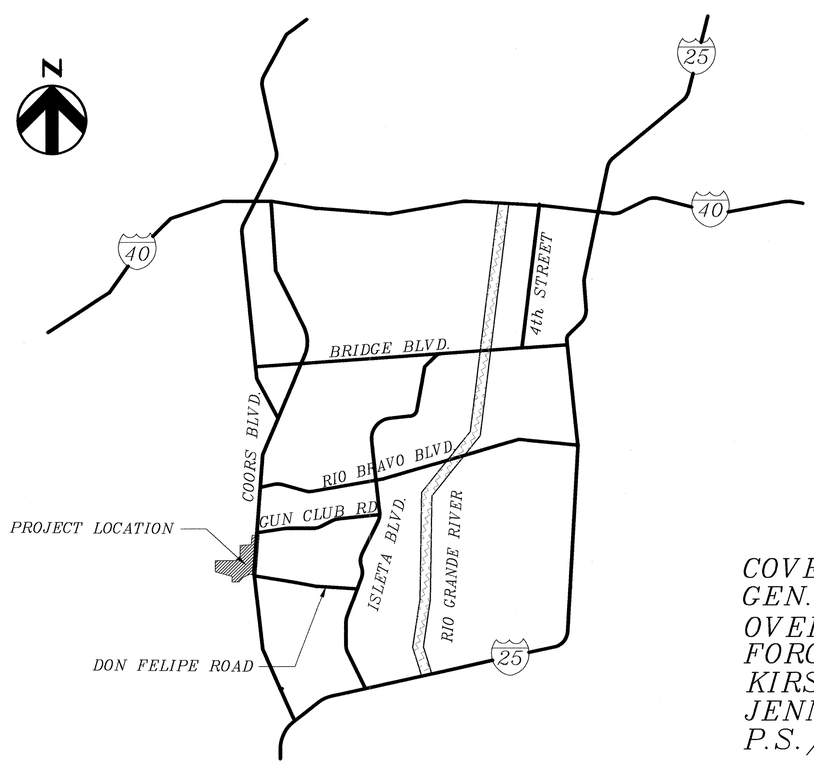

BERNALILLO
COUNTY
PUBLIC WORKS

STATE
OF
NEW MEXICO

APPROVAL OF AS BUILT DRAWINGS
CHIEF CONSTRUCTION ENGINEER
DATE 1-24-00

"AS RECORDED"
From Information provided by the contractors
By ____ Date 12/9/98

SHEET INDEX

COVER	1
GEN. NOTES/MISC. DETAILS	2
OVERALL PROJECT SITE	3
FORCEMAIN	4–6
KIRSTEN RD.	7–8
JENNIE RD.	9–10
P.S./FM DETAILS	11–16

HDR
HDR Engineering, Inc.
6200 Uptown Boulevard N.E., Suite 220
Albuquerque, NM 87110-4142
(505) 884-6065; FAX: (505) 884-5969

REV.	SHEETS	CITY ENGINEER	DATE	USER DEPARTMENT	DATE	USER DEPARTMENT	DATE

ENGINEER'S STAMP & SIGNATURE

WILLIAM F. ZIMMERMAN
NEW MEXICO
8051
REGISTERED PROFESSIONAL ENGINEER
07/30/98

APPROVALS	ENGINEER	DATE
DRC Chairman		
Transportation		
Water/Wastewater		8-1-98
Hydrology		
Parks		
Construction Management		

City Project No. 5737.90

APPROVED FOR CONSTRUCTION
7-30-98
County Engineer DATE

City Engineer DATE

Sheet 1 Of 16

COVER_BC.DWG

GENERAL NOTES:

1. ALL WORK DETAILED ON THESE PLANS TO BE PERFORMED UNDER THIS CONTRACT SHALL, EXCEPT AS OTHERWISE STATED OR PROVIDED FOR HEREON, BE CONSTRUCTED IN ACCORDANCE WITH THE CITY OF ALBUQUERQUE STANDARD SPECIFICATIONS FOR PUBLIC WORKS CONSTRUCTION, 1986 including updates 1 through 6 (REFERRED TO HEREAFTER AS THE STANDARD SPECIFICATIONS), THE LATEST VERSION OF THE BERNALILLO COUNTY PUBLIC WORKS STANDARDS, OR AS MODIFIED BY THE PROJECT SPECIFICATIONS, WHICHEVER IS MORE STRINGENT.

2. TWO (2) WORKING DAYS PRIOR TO ANY EXCAVATION, CONTRACTOR MUST CONTACT N.M. ONE-CALL SYSTEM, 260-1990, FOR LOCATION OF EXISTING UTILITIES.

3. THE CONTRACTOR SHALL EXERCISE CARE TO AVOID DISTURBING EXISTING UNDERGROUND UTILITIES. IT SHALL BE HIS RESPONSIBILITY TO COORDINATE WITH THE UTILITY COMPANIES IN ORDER TO PREVENT ANY SERVICE DISRUPTION.

4. PRIOR TO CONSTRUCTION, THE CONTRACTOR SHALL EXCAVATE AND VERIFY THE HORIZONTAL AND VERTICAL LOCATIONS OF ALL OBSTRUCTIONS. SHOULD A CONFLICT EXIST, THE CONTRACTOR SHALL NOTIFY THE CITY/COUNTY ENGINEER SO THAT THE CONFLICT CAN BE RESOLVED WITH MINIMUM AMOUNT OF DELAY.

5. RELOCATION OF EXISTING UTILITIES AND THE INSTALLATION OF NEW UTILITY LINES WILL BE COMPLETED IN ADVANCE OF STARTING THE PAVEMENT WORK. TEMPORARY PAVEMENT WILL BE PLACED IN ALL TRENCHES REQUIRED FOR THE UTILITY REPLACEMENTS IN THOSE AREAS THAT MUST MAINTAIN TRAFFIC UNTIL THE PAVEMENT WORK STARTS IN EACH AREA. PAVEMENT REPLACEMENT MUST BEGIN WITHIN SEVEN (7) DAYS OF TRENCH CLOSURE. TEMPORARY STRIPING SHALL BE THE CONTRACTOR'S RESPONSIBILITY.

6. ALL EXCAVATED MATERIAL THAT IS NOT REQUIRED TO BE REUSED MUST BE REMOVED FROM THE PROJECT AREA WITHIN FOUR DAYS OF EXCAVATION. SPOIL PILES WILL BE ALLOWED ONLY AS APPROVED BY THE CITY/COUNTY ENGINEER.

7. THE CONTRACTOR SHALL COORDINATE HIS CONSTRUCTION ACTIVITIES WITH ALL OTHER CONTRACTORS AND UTILITY COMPANIES WORKING IN THE SAME AREA. THE CONTRACTOR MAY BE REQUIRED TO RESCHEDULE THEIR ACTIVITIES TO ALLOW UTILITY CREWS TO PERFORM THEIR REQUIRED WORK. NO ADDITIONAL COMPENSATION WILL BE ALLOWED FOR DELAYS OR INCONVENIENCE CAUSED BY UTILITY COMPANY WORK CREWS.

8. WHEN ABUTTING NEW PAVEMENT TO EXISTING, CONTRACTOR SHALL SAW (MILL) CUT EXISTING PAVEMENT TO A NEAT, STRAIGHT LINE, AS REQUIRED, TO REMOVE ANY BROKEN OR CRACKED PAVEMENT AND MATCH NEW TO EXISTING.

9. CONTRACTOR IS RESPONSIBLE FOR REMOVAL AND DISPOSAL OF ALL DEMOLITION DEBRIS. SALVAGE OF ANY MATERIAL SHALL BE IDENTIFIED BY THE CITY/COUNTY ENGINEER. WORK MATERIALS SHALL BE DISPOSED OF IN CITY APPROVED WASTE AREAS SECURED BY AND AT THE EXPENSE OF THE CONTRACTOR.

10. ALL UTILITY LINES WHICH ARE NOT SPECIFICALLY DESIGNATED TO BE REMOVED AND REPLACED ON THE PLANS SHALL BE MAINTAINED IN SERVICE. SHORING, SHEETING, AND OTHER MEANS OF SUPPORT SHALL BE EMPLOYED BY THE CONTRACTOR TO PREVENT DAMAGE OR LOSS OF THESE EXISTING UTILITIES. BEAM AND CABLE OR OTHER ADEQUATE SUPPORTS SHALL BE USED FOR TEMPORARY SUPPORT OF ALL UTILITY LINES WHICH CROSS THE TRENCH. ANY DAMAGE TO EXISTING UTILITIES SHALL PROMPTLY BE REPAIRED AT THE CONTRACTOR'S EXPENSE. THE ENGINEER WILL BE IMMEDIATELY NOTIFIED OF ANY SIGNIFICANT DEVIATION OF EXPOSED UTILITIES FROM THE LOCATIONS SHOWN ON THE PLANS SO THAT CONFLICTS CAN BE RESOLVED IN A TIMELY MANNER.

11. THE CONTRACTOR SHALL ASSUME RESPONSIBILITY FOR ANY DAMAGE TO EXISTING PAVING OR CURB AND GUTTER DURING CONSTRUCTION, APART FROM THOSE SECTIONS INDICATED FOR REMOVAL ON THE PLANS, AND SHALL REPAIR OR REPLACE SAME, USING PATCHING DETAIL 2465, AT HIS OWN EXPENSE.

12. ALL ABANDONED UTILITY LINES WHICH ARE EXPOSED AS A RESULT OF CONSTRUCTION SHALL BE REMOVED AND DISPOSED OF BY THE CONTRACTOR.

13. SPECIAL NOTICES:

a. HAND DELIVER SPECIAL NOTICES TO EACH RESIDENCE OR BUSINESS ADJACENT TO THE CONSTRUCTION AREA AND TO OTHERS WHICH MAY BE AFFECTED BY CONSTRUCTION ACTIVITIES. SPECIAL NOTICES ARE TO INFORM RESIDENTS AND BUSINESSES IN WRITING WHENEVER ACCESS, UTILITY SERVICES OR OTHER SERVICES TO THEIR PROPERTY MAY BE IMPAIRED.

b. THE CONTRACTOR SHALL BE RESPONSIBLE FOR:

1. DELIVERY OF SPECIAL NOTICES NOT MORE THAN SEVEN (7) DAYS PRIOR TO PHYSICAL CONSTRUCTION THAT WILL AFFECT THE PROPERTY.

2. CORRECTED NOTICES ARE TO BE DELIVERED IF CONSTRUCTION DOES NOT START WITHIN 48 HOURS OF DATE GIVEN IN NOTICE.

3. THE WRITTEN NOTICE IS TO STATE:

- CONTRACTOR'S NAME, ADDRESS AND LOCAL TELEPHONE NUMBER
- NATURE OF WORK TO BE DONE AND TIMING OF WORK
- TYPE AND LENGTH OF DISRUPTION TO EXPECT
- EXPECTED DURATION OF CONSTRUCTION
- CONTRACTOR'S LOCAL PHONE NUMBER TO WHICH EMERGENCY CONDITIONS CAN BE REPORTED DURING NORMAL WORKING HOURS
- CONTRACTOR'S LOCAL PHONE NUMBER TO WHICH EMERGENCY CONDITIONS CAN BE REPORTED DURING NON-WORKING PERIODS.

14. SURVEY MONUMENTS DISTURBED BY CONTRACTOR SHALL BE RESTORED AT CONTRACTOR'S EXPENSE.

15. MINIMUM DESITY FOR BACKFILL SHALL BE 95% ASTM D1557 FOR SUBGRADE AND 95% ASTM D1557 FOR BACKFILL. DENSITY TEST MINIMUM FREQUENCY SHALL BE AT 200 FT. INTERVALS FOR EACH LIFT.

16. CONTRACTOR SHALL NOTIFY THE BERNILILLO COUNTY SHERIFF'S OFFICE AND THE FIRE MARSHALL'S OFFICE WHEN SCHEDULED WORK WILL IMPACT EMERGENCY VEHICLE ACCESS.

TRAFFIC CONTROL GENERAL NOTES:

1. SUBJECT TO THE APPROVED TRAFFIC CONTROL PLAN, AT LEAST ONE LANE SHALL BE OPEN TO TRAFFIC AT ALL TIMES. CONTRACTOR SHALL PROVIDE PROPER SIGNAGE AND FLAGMEN AND SHALL MAINTAIN THE TRAFFIC LANES IN SUCH A MANNER AS TO ASSURE PROPER SAFETY TO THE TRAVELLING PUBLIC ON ALL AFFECTED ROADS. THE CONTRACTOR SHALL PROVIDE ACCESS TO ALL PRIVATE AND PUBLIC PROPERTY AT ALL TIMES, EXCEPT WHEN GRADING, PAVING, EXCAVATION AND BACKFILL OPERATIONS ARE BEING CONDUCTED IMMEDIATELY IN FRONT OF THE PROPERTY, IN WHICH CASE ACCESS WILL NOT BE DENIED FOR MORE THAN 4 HOURS WITHOUT APPROVAL BY THE COUNTY.

2. TRAFFIC LANES PROVIDED DURING CONSTRUCTION SHALL BE MAINTAINED, IN SUCH A CONDITION UNDER ALL WEATHER CONDITIONS, SO AS TO PERMIT THE REASONABLE PASSAGE OF PASSENGER VEHICLES, AND SHALL BE KEPT GRADED AND SMOOTH, AND WATERED SEVERAL TIMES DAILY TO CONTROL DUST.

3. A DAILY TRAFFIC CONTROL LOG SHALL BE MAINTAINED BY THE CONTRACTOR REFLECTING THE TYPES AND LOCATIONS OF ALL TRAFFIC CONTROL DEVICES, SIGNS, BARRICADES, ETC. BEING USED ON THE PROJECT IN COMPLIANCE WITH THE APPROVED TRAFFIC CONTROL PLAN. THIS LOG SHALL BE SUBMITTED TO THE BERNALILLO COUNTY TRAFFIC CONTROL MANAGER UPON COMPLETION OF THE PROJECT CONSTRUCTION OR WHEN SO REQUESTED BY THE PROJECT OR THE BERNALILLO COUNTY TRAFFIC CONTROL MANAGER.

4. ALL NEW STREET PAVING ABUTTING EXISTING AREAS SHALL MATCH THE ELEVATIONS OF THOSE AREAS.

5. CONTRACTOR SHALL PROVIDE A WEEKLY CONSTRUCTION ACTIVITY SCHEDULE TO BERNALILLO COUNTY PUBLIC WORKS DEPARTMENT, ATTN: HOSS FOSTER.

6. PROJECT IS SUBJECT TO THE REQUIREMENTS OF COUNTY ORDINANCE NO. 95-12 AND ORDINANCE NO. 96-3 . THE CONTRACTOR IS RESPONSIBLE FOR ACQUIRING ALL PERMITS NECESSARY. CONTRACTOR SHALL CALL 848-1500 FOR MORE INFORMATION.

7. PRIOR TO CONSTRUCTION, THE CONTRACTOR SHALL CONTACT THE MIDDLE RIO GRANDE CONSERVANCY DISTRICT (MRGCD) AT 247-0234 TO PROVIDE NOTICE OF THE SCHEDULE FOR CONSTRUCTION AT THE MRGCD FACILITIES. ALL WORK TO BE PERFORMED IN THE MRGCD RIGHT-OF-WAY SHALL BE CLOSELY COORDINATED WITH MRGCD.

8. THE CONTRACTOR SHALL SUBMIT A TRAFFIC CONTROL PLAN TO THE COUNTY TRAFFIC CONTROL MANAGER AND TO THE NEW MEXICO STATE HIGHWAY AND TRANSPORTATION DEPARTMENT AT LEAST 48 HOURS PRIOR TO COMMENCEMENT OF WORK. TRAFFIC CONTROL PLANS SHALL BE PREPARED IN ACCORDANCE WITH MUTCD REQUIREMENTS AND BY CERTIFIED PERSONNEL AND MUST BE APPROVED PRIOR TO COMMENCEMENT OF WORK ON THE PROJECT. CALL 848-1504 FOR FURTHER INFORMATION.

9. THE CONTRACTOR SHALL PROVIDE A BARRICADING BOND TO COUNTY.

SCANNED BY
MESA REPRO

*PAVING CHART

STREET	WIDTH
Jennie Road	24'
Kirsten Road	24'

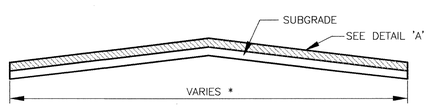

SECTION 'A'

* WILL VARY ACCORDING TO PAVING CHART.

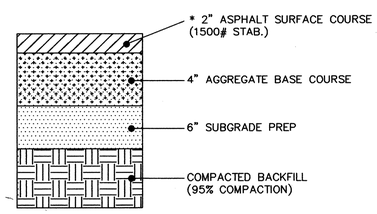

PAVEMENT DETAIL "A"

R-VALUE IS 35
N.T.S.

SURVEY INFORMATION

FIELD NOTES

NO.	BY	DATE

BENCH MARKS

7-010, City of Albuquerque bench mark, the station is a standard ACS 3 1/4" aluminum cap riveted to a pipe 0.25' above ground and is stamped 7-010,1988". Station is located at intersection of Gun Club and Kirk Lane on the north side of intersection.

AS BUILT INFORMATION

CONTRACTOR Condor Const DATE 1998
WORK STAKED BY
INSPECTOR'S ACCEPTANCE BY HDR DATE 1998
FIELD VERIFICATION BY HDR DATE 1998
DRAWINGS CORRECTED BY HDR DATE 1998
MICRO-FILM INFORMATION
RECORDED BY
DATE
NO.

ENGINEER'S SEAL

WILLIAM F. ZIMMERMAN
NEW MEXICO
REGISTERED PROFESSIONAL ENGINEER
No. 7519
7/31/98

NO.	DATE	REMARKS	BY
		REVISIONS	
		DESIGN	

DESIGNED BY BZ DATE 2/1998
DRAWN BY GRH DATE 2/1998
CHECKED BY JL DATE 2/1998

"AS RECORDED"
From information provided by the contractors
By JB Date 12/8/98

HDR
HDR Engineering, Inc.

BERNALILLO COUNTY
PUBLIC WORKS DEPARTMENT

TITLE: COORS PARK AND DESERT PALMS SEWER PROJECT
GEN. NOTES/MISC. DETAILS

Design Review Committee | City Engineer Approval | Last Design Update | Mo./Day/Yr. | Mo./Day/Yr.

PROJECT NO. 5737.90 | FILE NAME GEN_BC | SHEET 2 OF 16

GEN_BC.DWG

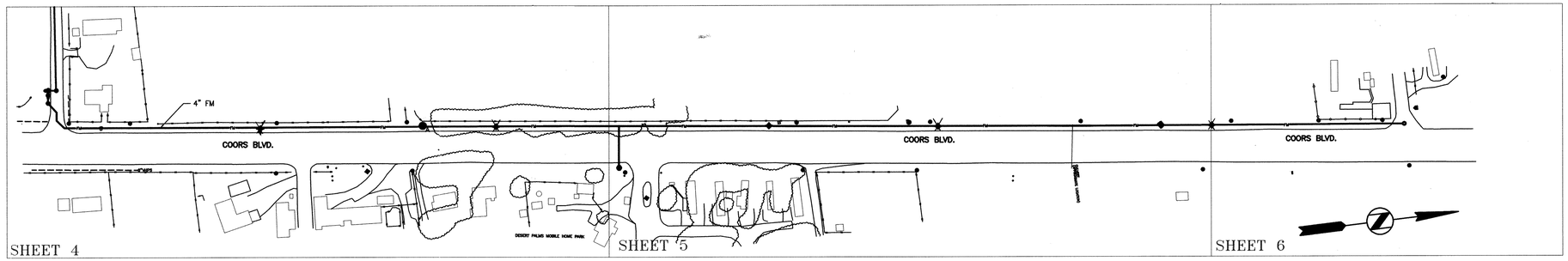

SCANNED BY
MESA REPRO

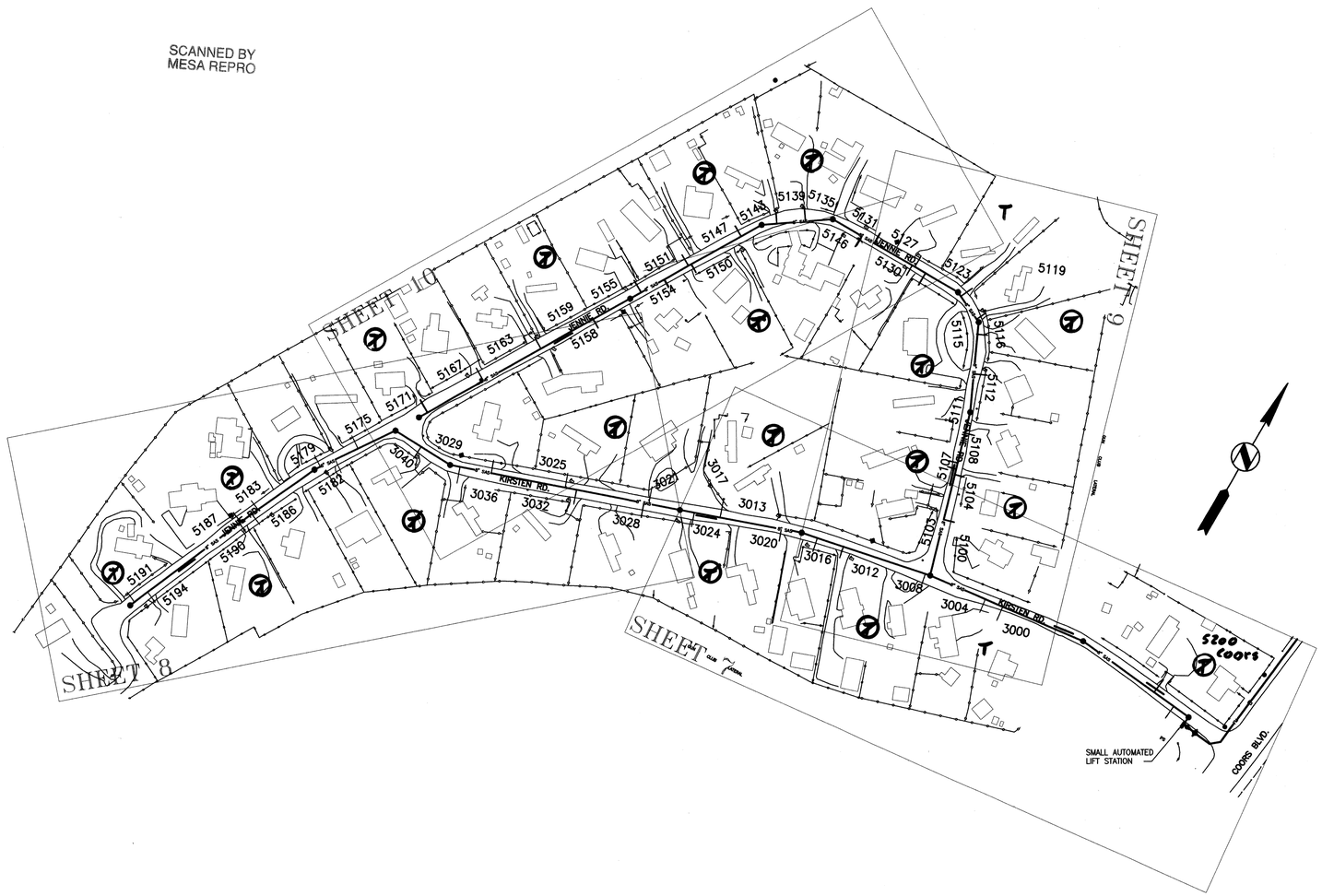

LEGEND

- SAS MANHOLE
- SMALL AUTOMATED LIFT STATION
- PIGGING MANHOLE
- AIR/VAC RELEASE MANHOLE
- T SEPTIC TANK
- ABANDONED TANK (2/99)

"AS RECORDED"
From information provided by the contractors
By BB Date 12/9/98

HDR
HDR Engineering, Inc.

AS BUILT INFORMATION	
CONTRACTOR Condor Corp.	DATE 1998
WORK STAKED BY	DATE 1998
INSPECTOR'S ACCEPTANCE BY HDR	DATE 1998
FIELD VERIFICATION BY HDR	DATE 1998
DRAWINGS CORRECTED BY HDR	DATE 1998
MICRO-FILM INFORMATION	
RECORDED BY	DATE
NO.	

SURVEY INFORMATION		
FIELD NOTES		
NO.	BY	DATE

BENCH MARKS
7-010, City of Albuquerque bench mark, the station is a standard ACS 3 1/4" aluminum cap riveted to a pipe 0.25' above ground and is stamped "7-010,1988". Station is located at intersection of Gun Club and Kirk Lane on the north side of intersection.

ENGINEER'S SEAL
WILLIAM F. ZIMMERMAN
NEW MEXICO
REGISTERED PROFESSIONAL ENGINEER
8/31/98

NO.	DATE	REMARKS	BY
		REVISIONS	
		DESIGN	

DESIGNED BY BZ	DATE 2/1998	
DRAWN BY GRH	DATE 2/1998	
CHECKED BY JL	DATE 2/1998	

BERNALILLO COUNTY
PUBLIC WORKS DEPARTMENT

TITLE: COORS PARK AND DESERT PALMS SEWER PROJECT
OVERALL PROJECT SITE

Design Review Committee	City Engineer Approval	Last Design Update	Mo./Day/Yr.	Mo./Day/Yr.

PROJECT NO.	FILE NAME	SHEET	OF
5737.90	OVERALL1	3	16

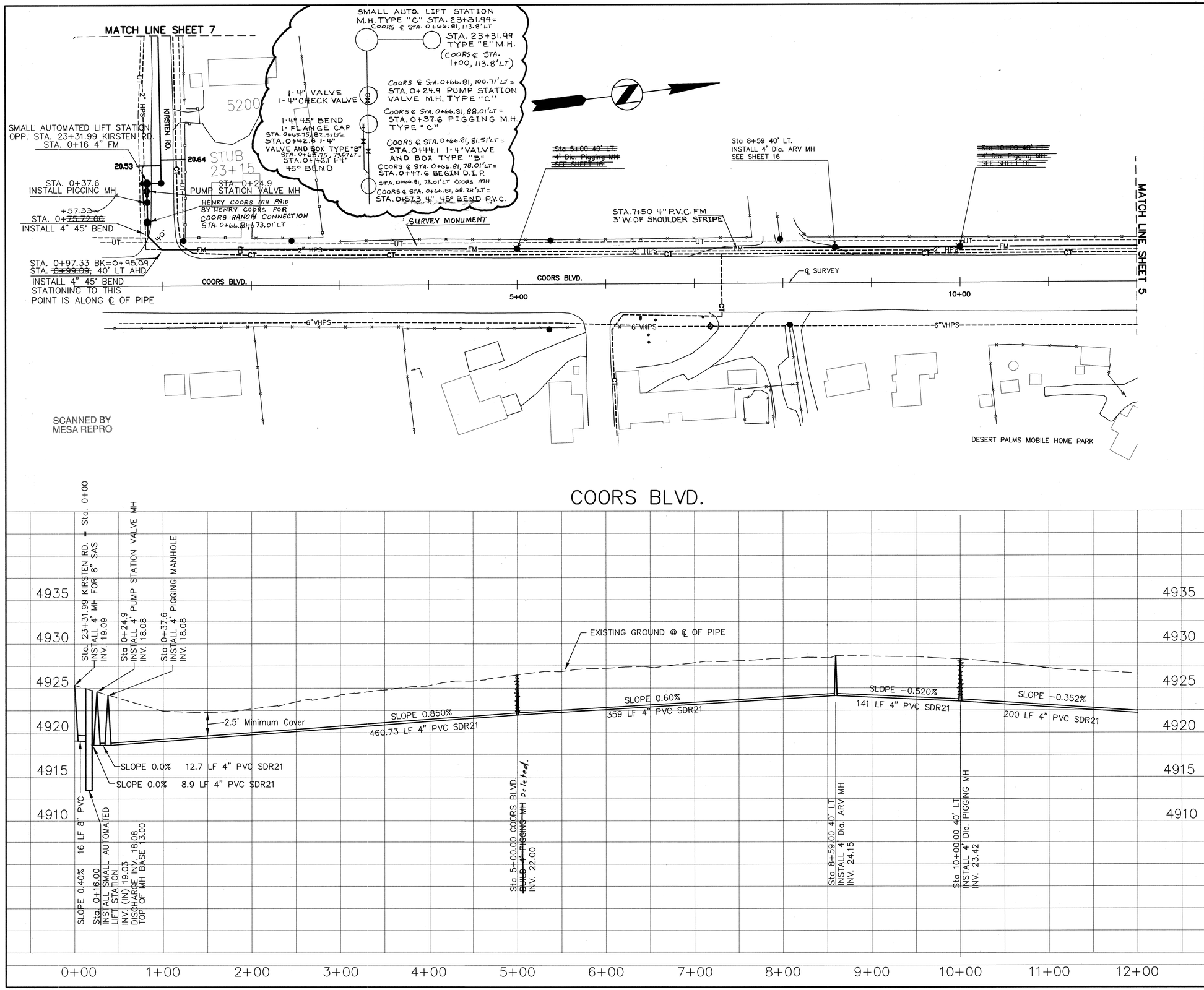

PLAN
SCALE: 1"=50'

PROFILE
SCALE: 1"=50' HOR
1"=5' VERT

LEGEND

NEW	EXIST.	
—FM—	--FM--	FORCE MAIN
—SAS—	--SAS--	SANITARY SEWER LINE
—HS—	--------	SAS HOUSE SERVICE
●	-(-)-	MANHOLE
	--CT--	CATV
	--2" HPS--	2" GAS LINE
	--6"VHPS--	6" GAS LINE
	--UT--	UNDERGROUND TELEPHONE LINE
	✱	SEPTIC TANK
	--UE--	UNDERGROUND ELECTRICAL LINE
	←●	OVERHEAD POWER POLE W/ GUY WIRE
	Ⓦ	WELL

"AS RECORDED"
From information provided by the contractors
By: BS Date: 12/9/98

HDR
HDR Engineering, Inc.

BERNALILLO COUNTY
PUBLIC WORKS DEPARTMENT

TITLE: COORS PARK AND DESERT PALMS SEWER PROJECT
FORCEMAIN

Design Review Committee	City Engineer Approval	Last Design Update	Mo./Day/Yr.	Mo./Day/Yr.

PROJECT NO.	FILE NAME	SHEET	OF
5737.90	BC_04	4	16

AS BUILT INFORMATION
CONTRACTOR CONDOR CONST DATE 1998
WORK STAKED BY DATE 1998
INSPECTOR'S ACCEPTANCE BY HDR DATE 1998
FIELD VERIFICATION BY HDR DATE 1998
DRAWINGS CORRECTED BY HDR DATE 1998
MICRO-FILM INFORMATION
RECORDED BY DATE
NO.

BENCH MARKS
7-Q10, City of Albuquerque bench mark, the station is a standard ACS 3 1/4" aluminum cap riveted to a pipe 0.25 above ground and is stamped 7-Q10,1988" Station is located at intersection of Gun Club and Kirk Lane on the north side of intersection.

SURVEY INFORMATION
FIELD NOTES

NO.	BY	DATE

ENGINEER'S SEAL
WILLIAM F. ZIMMERMAN
NEW MEXICO
9351
REGISTERED PROFESSIONAL ENGINEER
12/9/98

NO.	DATE	REMARKS	BY
		REVISIONS	
		DESIGN	

		DATE
DESIGNED BY	BZ	2/1998
DRAWN BY	GRH	2/1998
CHECKED BY	JL	2/1998

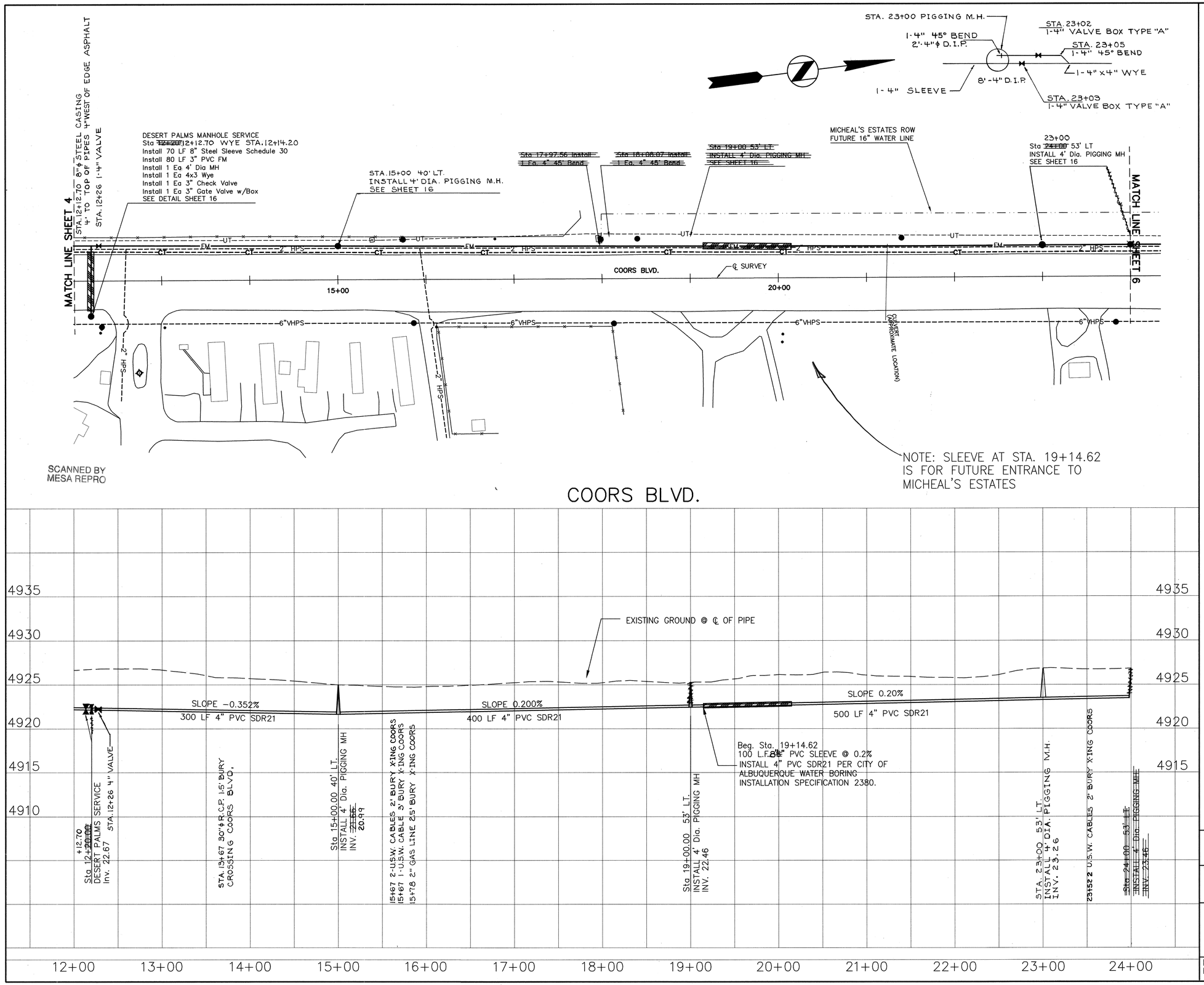

SCANNED BY
MESA REPRO

PLAN
SCALE: 1"=50'

PROFILE
SCALE: 1"=50' HOR
1"=5' VERT

LEGEND

NEW	EXIST.	
—FM—	—FM—	FORCE MAIN
—GAS—	—GAS—	SANITARY SEWER LINE
—HS—		SAS HOUSE SERVICE
●		MANHOLE
	—CT—	CATV
	—2" HPS—	2" GAS LINE
	—6"VHPS—	6" GAS LINE
	—UT—	UNDERGROUND TELEPHONE LINE
		SEPTIC TANK
	—UE—	UNDERGROUND ELECTRICAL LINE
		OVERHEAD POWER POLE W/ GUY WIRE
	Ⓦ	WELL

"AS RECORDED"
From information provided by the contractors
By DS Date 12/9/98

HDR
HDR Engineering, Inc.

BERNALILLO COUNTY
PUBLIC WORKS DEPARTMENT

TITLE: COORS PARK AND DESERT PALMS SEWER PROJECT
FORCEMAIN

Design Review Committee	City Engineer Approval	Last Design Update	Mo./Day/Yr.	Mo./Day/Yr.

PROJECT NO.	FILE NAME	SHEET	OF
5737.90	BC_05	5	16

AS BUILT INFORMATION
CONTRACTOR CONDOR CONSTDATE 1998
WORK STAKED BY DATE 1998
INSPECTOR'S ACCEPTANCE BY HDR DATE 1998
FIELD VERIFICATION BY HDR DATE 1998
DRAWINGS CORRECTED BY HDR DATE 1998
MICRO-FILM INFORMATION
RECORDED BY DATE
NO.

BENCH MARKS
7-010, City of Albuquerque bench mark, the station is a standard ACS 3 1/4" aluminum cap riveted to a pipe 0.25' above ground and is stamped "7-010,1988". Station is located at intersection of Gun Club and Kirk Lane on the north side of intersection.

SURVEY INFORMATION
FIELD NOTES

NO.	BY	DATE

ENGINEER'S SEAL
WILLIAM F. ZIMMERMAN
NEW MEXICO
8851
REGISTERED PROFESSIONAL ENGINEER
12/31/98

NO.	DATE	REMARKS	BY
		REVISIONS	
		DESIGN	

DESIGNED BY BZ DATE 2/1998
DRAWN BY GRH DATE 2/1998
CHECKED BY JL DATE 2/1998

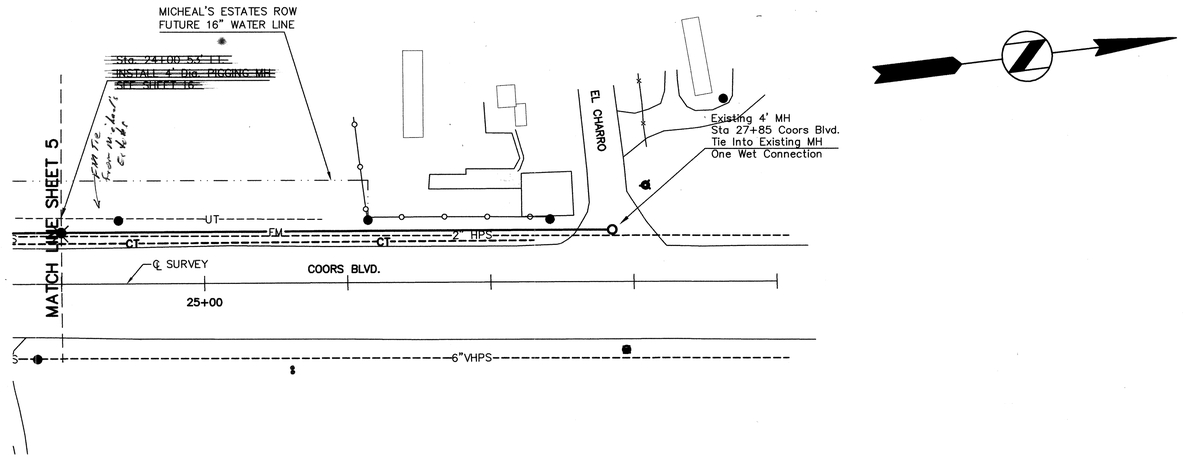

SCANNED BY
MESA REPRO

COORS BLVD.

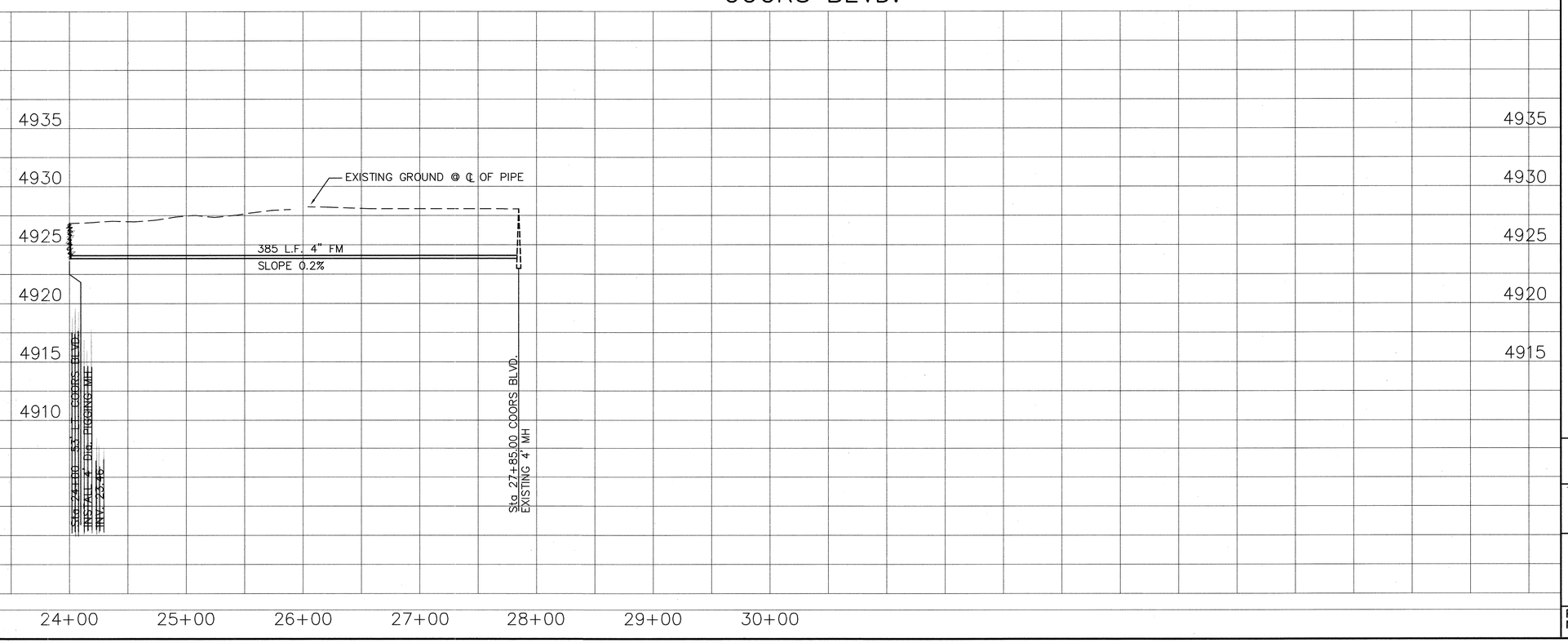

PLAN
SCALE: 1"=50'

PROFILE
SCALE: 1"=50' HOR
1"=5' VERT

LEGEND

NEW	EXIST.	
—FM—	--FM--	FORCE MAIN
—SAS—	--SAS--	SANITARY SEWER LINE
—HS—	--------	SAS HOUSE SERVICE
●	--(S)--	MANHOLE
	--CT--	CATV
	--2" HPS--	2" GAS LINE
	--6"VHPS--	6" GAS LINE
	--UT--	UNDERGROUND TELEPHONE LINE
	✳	SEPTIC TANK
	--UE--	UNDERGROUND ELECTRICAL LINE
	←●	OVERHEAD POWER POLE W/ GUY WIRE
	(W)	WELL

"AS RECORDED"
From Information provided by the contractors
By BS Date 12/9/98

HDR
HDR Engineering, Inc.

BERNALILLO COUNTY
PUBLIC WORKS DEPARTMENT

TITLE: COORS PARK AND DESERT PALMS SEWER PROJECT
FORCE MAIN

Design Review Committee | City Engineer Approval | Last Design Update | Mo./Day/Yr. | Mo./Day/Yr.

PROJECT NO. 5737.90 | FILE NAME BC_06 | SHEET 6 OF 16

RE: DR.TWG

AS BUILT INFORMATION
CONTRACTOR Conoor Const DATE 1998
WORK STAKED BY DATE 1998
INSPECTOR'S FIELD ACCEPTANCE BY HDR DATE 1998
VERIFICATION BY HDR DATE 1998
DRAWINGS CORRECTED BY HDR DATE 1998
MICRO-FILM INFORMATION
RECORDED BY DATE
NO.

BENCH MARKS
7-010, City of Albuquerque bench mark, the station is a standard #C3 3 1/4" aluminum cap riveted to a pipe 0.25' above ground and is stamped "7-010,1988". Station is located at intersection of Gun Club and Kirk Lane on the north side of intersection.

SURVEY INFORMATION
FIELD NOTES

NO.	BY	DATE

ENGINEER'S SEAL
WILLIAM F. ZIMMERMAN
NEW MEXICO
REGISTERED PROFESSIONAL ENGINEER
12/9/98

NO.	DATE	REMARKS	BY
		REVISIONS	
		DESIGN	

DESIGNED BY BZ DATE 2/1998
DRAWN BY GRH DATE 2/1998
CHECKED BY JL DATE 2/1998

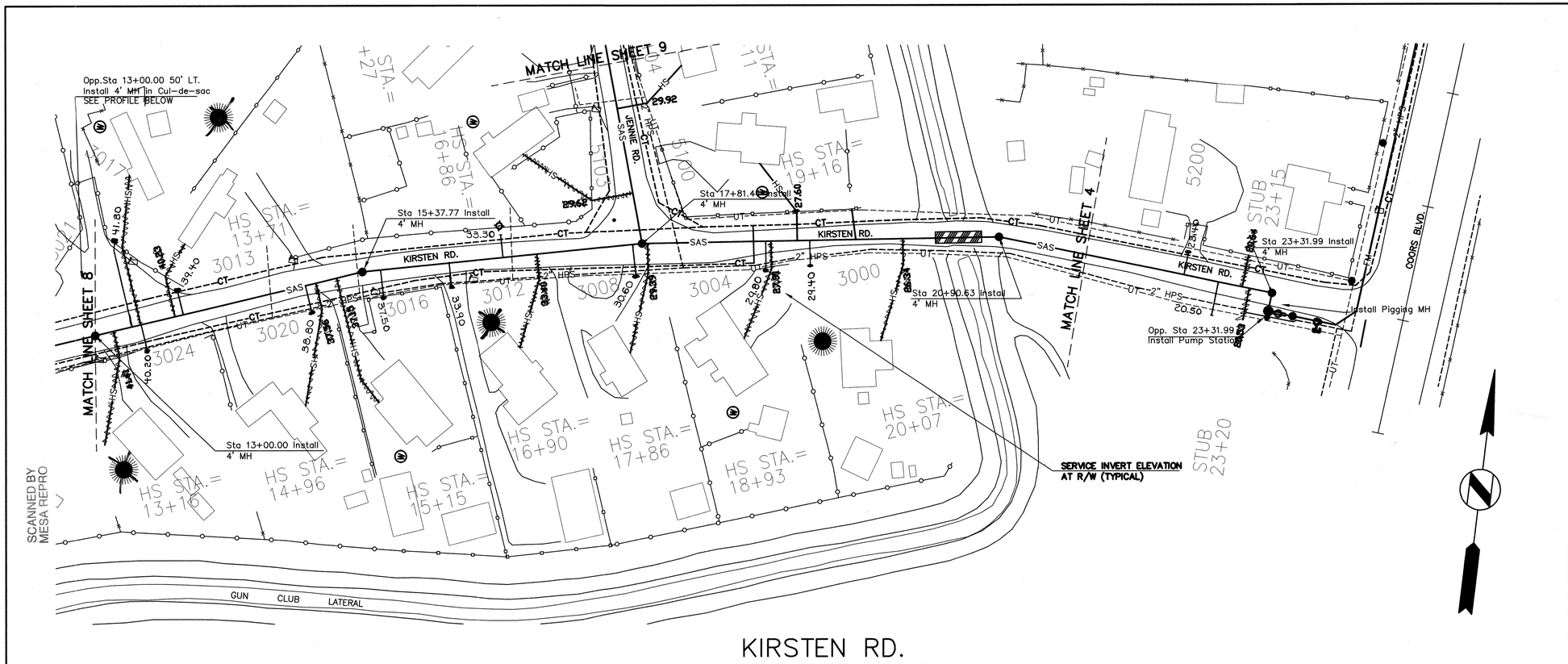

SCANNED BY
MESA REPRO

PLAN
SCALE: 1"=50'

PROFILE
SCALE: 1"=50' HOR
1"=5' VERT

LEGEND

NEW	EXIST.	
—FM—	—FM—	FORCE MAIN
—SAS—	—SAS—	SANITARY SEWER LINE
—HS—		SAS HOUSE SERVICE
●		MANHOLE
	—CT—	CATV
	—2" HPS—	2" GAS LINE
	—6" HPS—	6" GAS LINE
	—UT—	UNDERGROUND TELEPHONE LINE
		SEPTIC TANK
	—UE—	UNDERGROUND ELECTRICAL LINE
		OVERHEAD POWER POLE W/ GUY WIRE
	Ⓦ	WELL

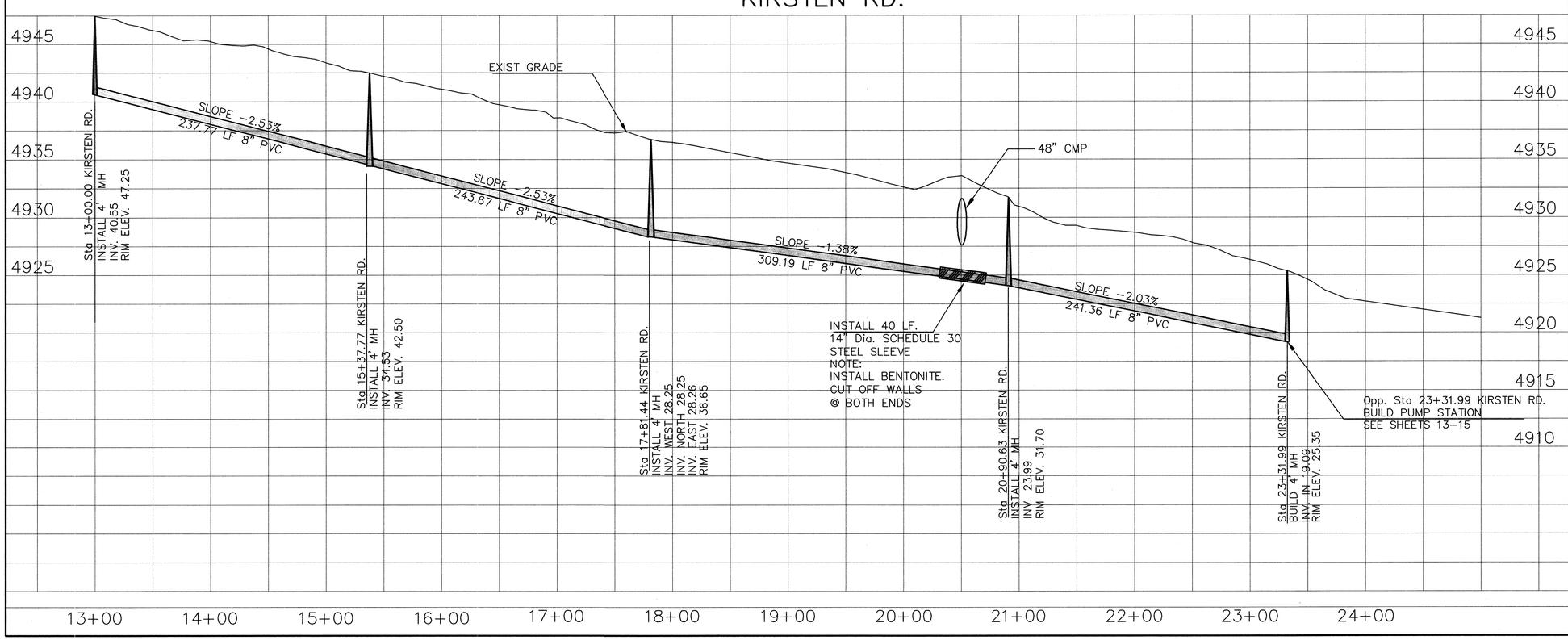

"AS RECORDED"
From Information provided by the contractors
By ____ Date 12/9/98

HDR
HDR Engineering, Inc.

NO.	DATE	REMARKS	BY
		REVISIONS	
		DESIGN	

DESIGNED BY BZ DATE 2/1998
DRAWN BY GRH DATE 2/1998
CHECKED BY JL DATE 2/1998

ENGINEER'S SEAL
WILLIAM E. ZIMMERMAN
REGISTERED PROFESSIONAL ENGINEER
07/31/98

AS BUILT INFORMATION
CONTRACTOR Condor Coast DATE 1998
WORK STAKED BY HDR DATE 1998
INSPECTOR'S ACCEPTANCE BY HDR DATE 1998
FIELD VERIFICATION BY HDR DATE 1998
DRAWINGS CORRECTED BY HDR DATE 1998
MICRO-FILM INFORMATION
RECORDED BY
DATE
NO.

BENCH MARKS
7-G10, City of Albuquerque bench mark, the station is a standard ACS 3 1/4" aluminum cap riveted to a pipe 0.25' above ground and is stamped 7-G10,1986". Station is located at intersection of Gun Club and Kirk Lane on the north side of intersection.

SURVEY INFORMATION
FIELD NOTES

NO.	BY	DATE

BERNALILLO COUNTY
PUBLIC WORKS DEPARTMENT

TITLE: COORS PARK AND DESERT PALMS SEWER PROJECT

Design Review Committee | City Engineer Approval | Last Design Update | No./Dsg/Yr. | No./Dsg/Yr.

PROJECT NO. 5737.90 | FILE NAME BC_07 | SHEET 7 OF 16

bscoord6.dwg

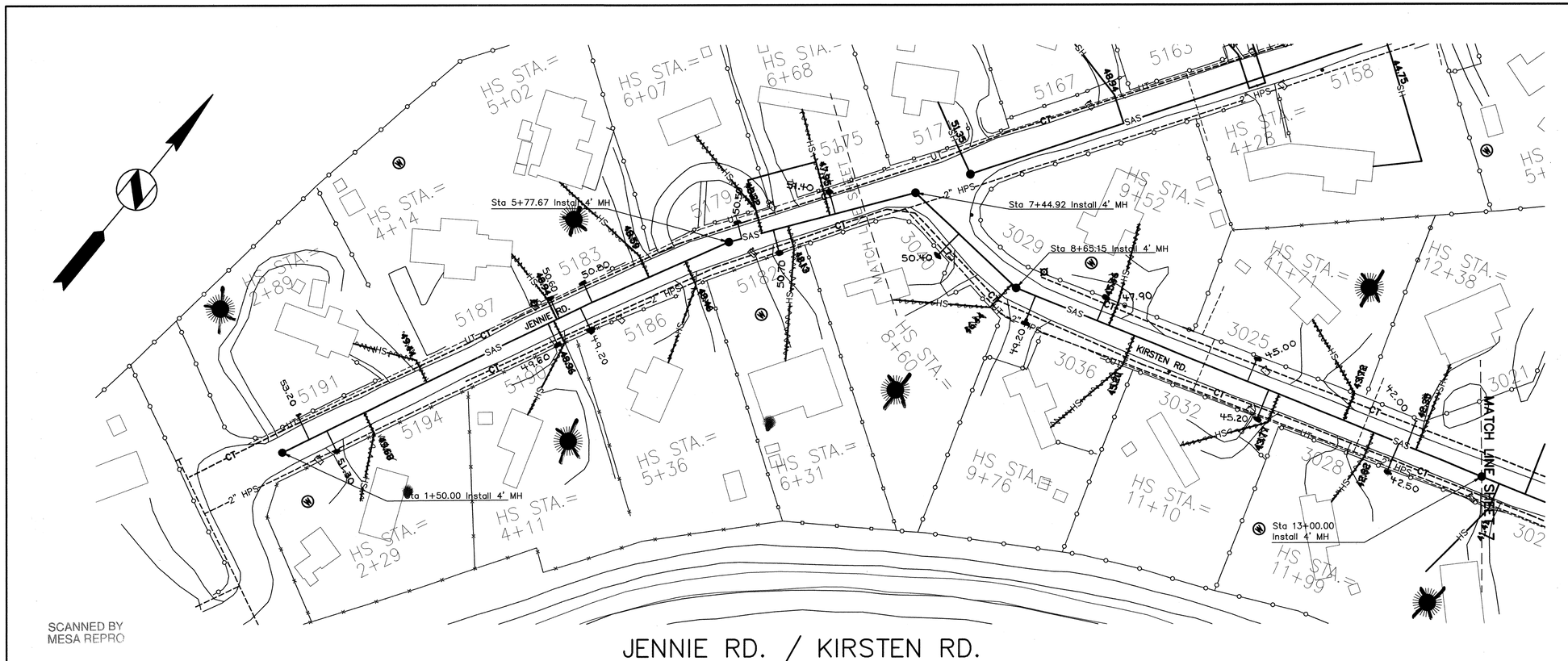

SCANNED BY
MESA REPRO

JENNIE RD. / KIRSTEN RD.

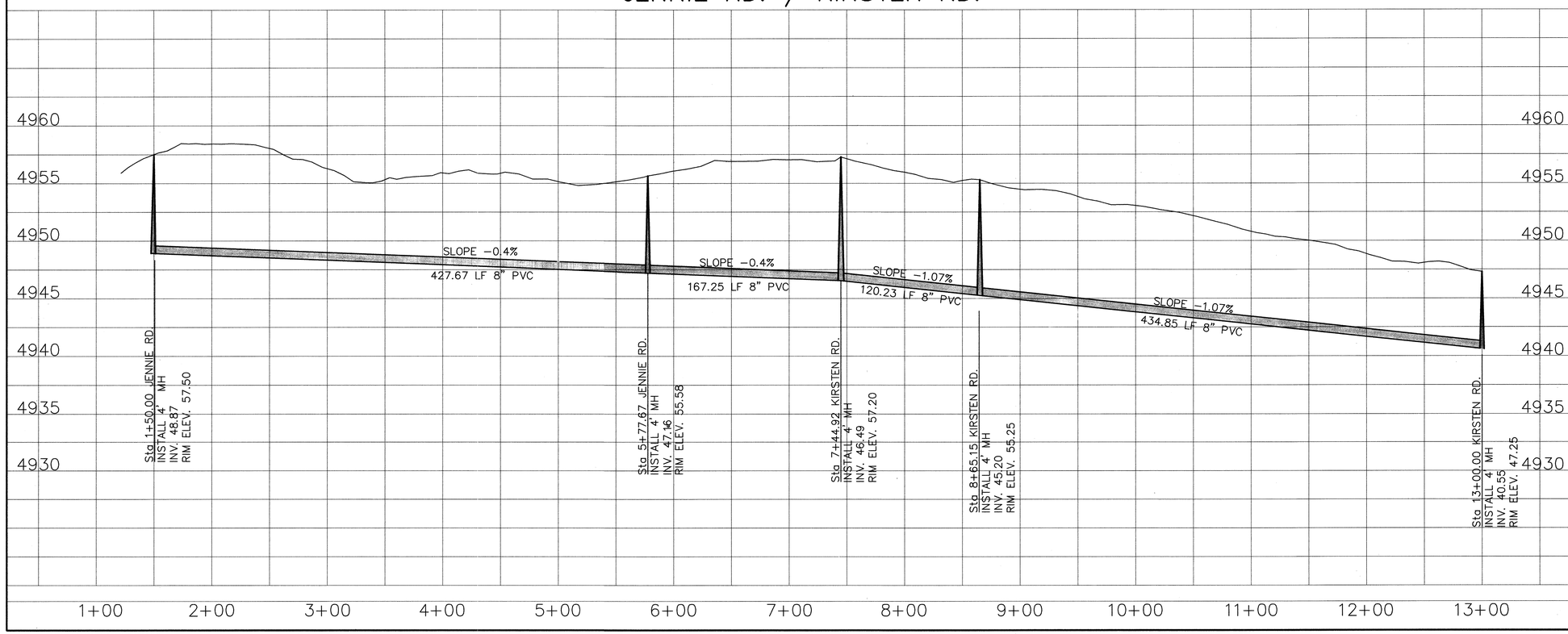

PLAN
SCALE: 1"=50'

PROFILE
SCALE: 1"=50' HOR
1"=5' VERT

LEGEND

NEW	EXIST.	
—FM—	--FM--	FORCE MAIN
—SAS—	--SAS--	SANITARY SEWER LINE
—HS—	--HS--	SAS HOUSE SERVICE
—●—	--○--	MANHOLE
	--CT--	CATV
	--2" HPS--	2" GAS LINE
	--6"HPS--	6" GAS LINE
	--UT--	UNDERGROUND TELEPHONE LINE
		SEPTIC TANK
	--UE--	UNDERGROUND ELECTRICAL LINE
		OVERHEAD POWER POLE W/ GUY WIRE
	Ⓦ	WELL

"AS RECORDED"
From Information provided by the contractors
By DB Date 12/4/98

HDR
HDR Engineering, Inc.

AS BUILT INFORMATION

CONTRACTOR Coors Const DATE 1998
WORK STAKED BY HDR DATE 1998
INSPECTOR'S ACCEPTANCE BY HDR DATE 1998
FIELD VERIFICATION BY HDR DATE 1998
DRAWINGS CORRECTED BY HDR DATE 1998
MICRO-FILM INFORMATION
RECORDED BY DATE
NO.

BENCH MARKS

7-010, City of Albuquerque bench mark, the station is a standard ACS 3 1/4" aluminum cap riveted to a pipe 0.25' above ground and is stamped "7-010,1988". Station is located at intersection of Gun Club and Kirk Lane on the north side of intersection.

SURVEY INFORMATION

FIELD NOTES

NO.	BY	DATE

ENGINEER'S SEAL
WILLIAM E. ZIMMERMAN
NEW MEXICO
9881
REGISTERED PROFESSIONAL ENGINEER
10/23/98

NO.	DATE	REMARKS	BY
		REVISIONS	
		DESIGN	

DESIGNED BY BZ DATE 2/1998
DRAWN BY GRH DATE 2/1998
CHECKED BY JL DATE 2/1998

BERNALILLO COUNTY
PUBLIC WORKS DEPARTMENT

TITLE: COORS PARK AND DESERT PALMS SEWER PROJECT
KIRSTEN ROAD

Design Review Committee | City Engineer Approval | Last Design Update | Mo./Day/Yr. | Mo./Day/Yr.

PROJECT NO. 5737.90 | FILE NAME BC_08 | SHEET 8 OF 16

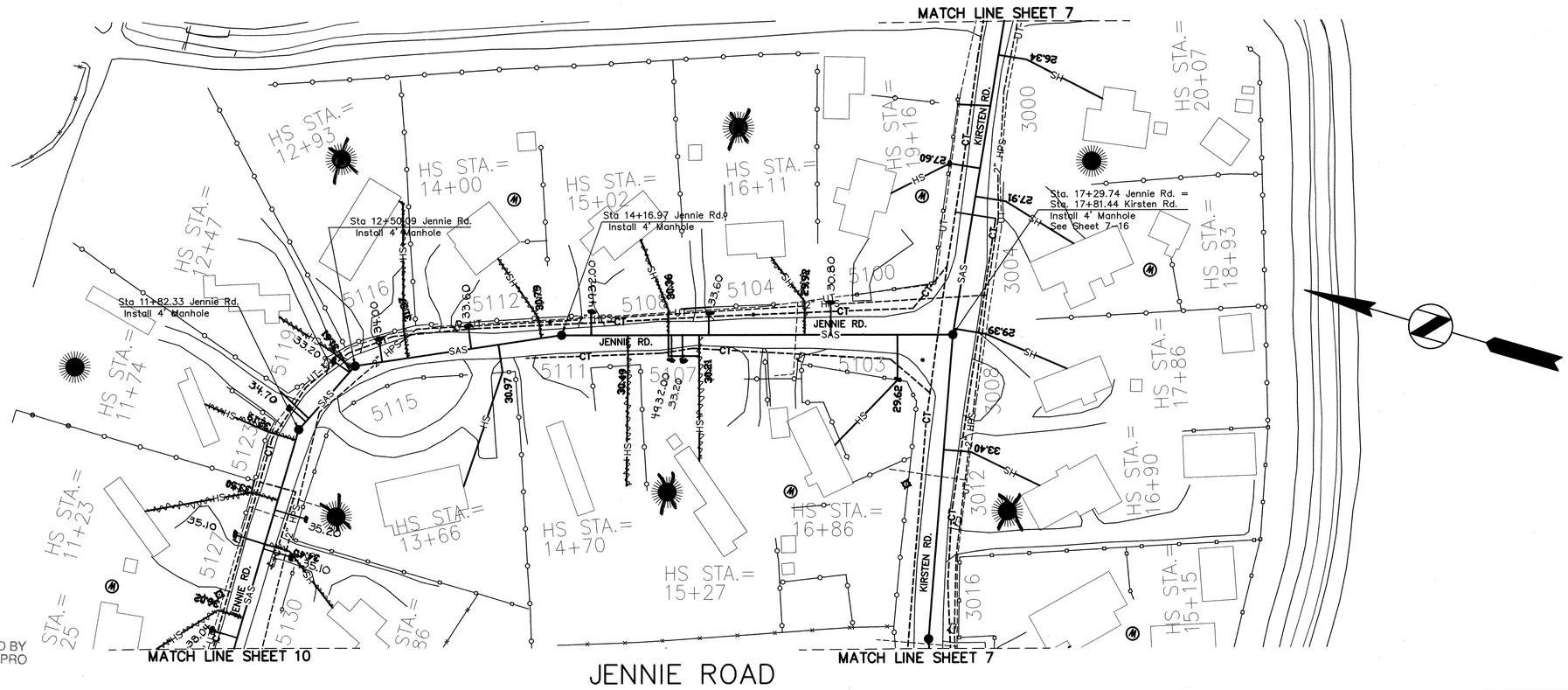

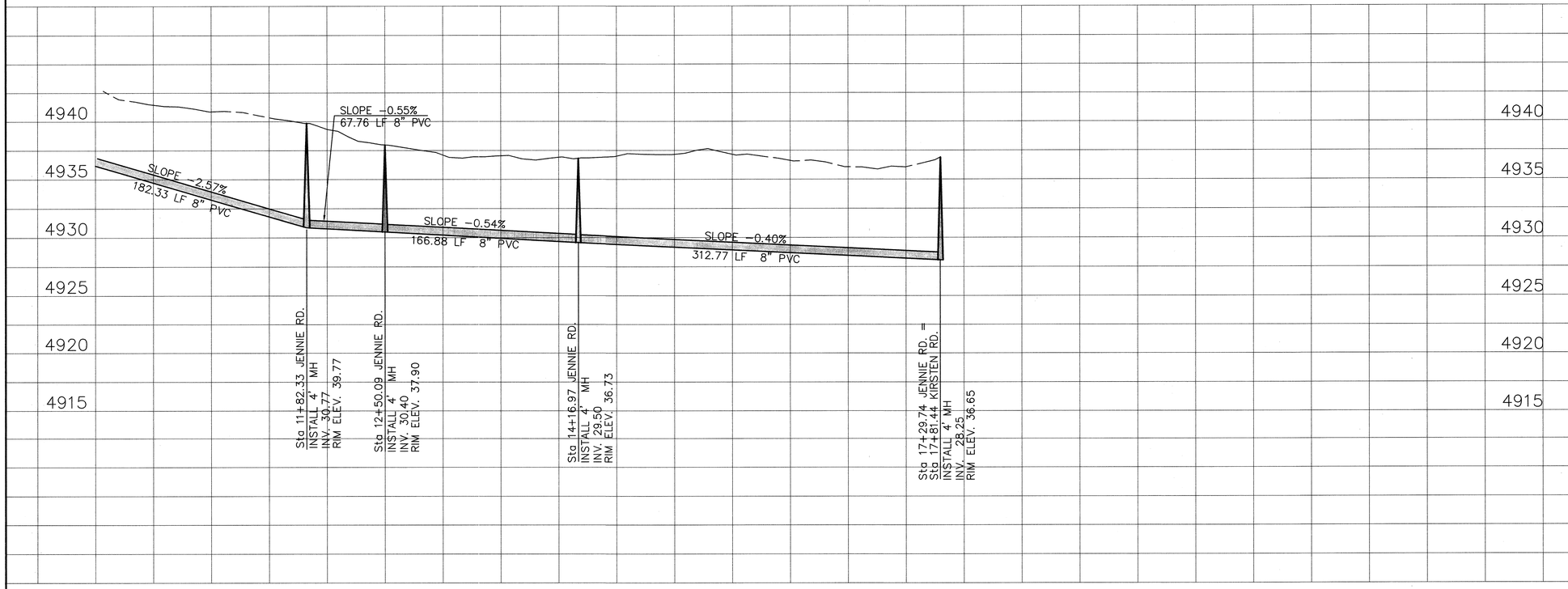

PLAN
SCALE: 1"=50'

PROFILE
SCALE: 1"=50' HOR
1"=5' VERT

LEGEND

NEW	EXIST.	
—FM—	—FM—	FORCE MAIN
—SAS—	—SAS—	SANITARY SEWER LINE
—HS—		SAS HOUSE SERVICE
		MANHOLE
	—CT—	CATV
	—2" HPS—	2" GAS LINE
	—6" HPS—	6" GAS LINE
	—UT—	UNDERGROUND TELEPHONE LINE
		SEPTIC TANK
	—UE—	UNDERGROUND ELECTRICAL LINE
		OVERHEAD POWER POLE W/ GUY WIRE
		WELL

"AS RECORDED"
From information provided by the contractors
By PS Date 12/9/98

HDR
HDR Engineering, Inc.

BERNALILLO COUNTY
PUBLIC WORKS DEPARTMENT

TITLE: COORS PARK AND DESERT PALMS SEWER PROJECT
JENNIE ROAD

Design Review Committee	City Engineer Approval	Last Design Update	Mo./Day/Yr.	Mo./Day/Yr.

PROJECT NO.	FILE NAME	SHEET	OF
5737.90	BC_09	9	16

AS BUILT INFORMATION

CONTRACTOR	CENTER CONST	DATE 1998
WORK STAKED BY		DATE 1998
INSPECTOR'S ACCEPTANCE BY	HDR	DATE 1998
FIELD VERIFICATION BY	HDR	DATE 1998
DRAWINGS CORRECTED BY	HDR	DATE 1998

MICRO-FILM INFORMATION

RECORDED BY	
DATE	
NO.	

BENCH MARKS

7-010, City of Albuquerque bench mark, the station is a standard ACS 3 1/4" aluminum cap riveted to a pipe 0.25 above ground and is stamped "7-010,1988". Station is located at intersection of Gun Club and Kirk Lane on the north side of intersection.

SURVEY INFORMATION

FIELD NOTES

NO.	BY	DATE

ENGINEER'S SEAL

WILLIAM F. ZIMEMAN
No. 6651
REGISTERED PROFESSIONAL ENGINEER
NEW MEXICO
07/31/98

NO.	DATE	REMARKS	BY
		REVISIONS	
		DESIGN	

DESIGNED BY	BZ	DATE 2/1998
DRAWN BY	GRH	DATE 2/1998
CHECKED BY	JL	DATE 2/1998

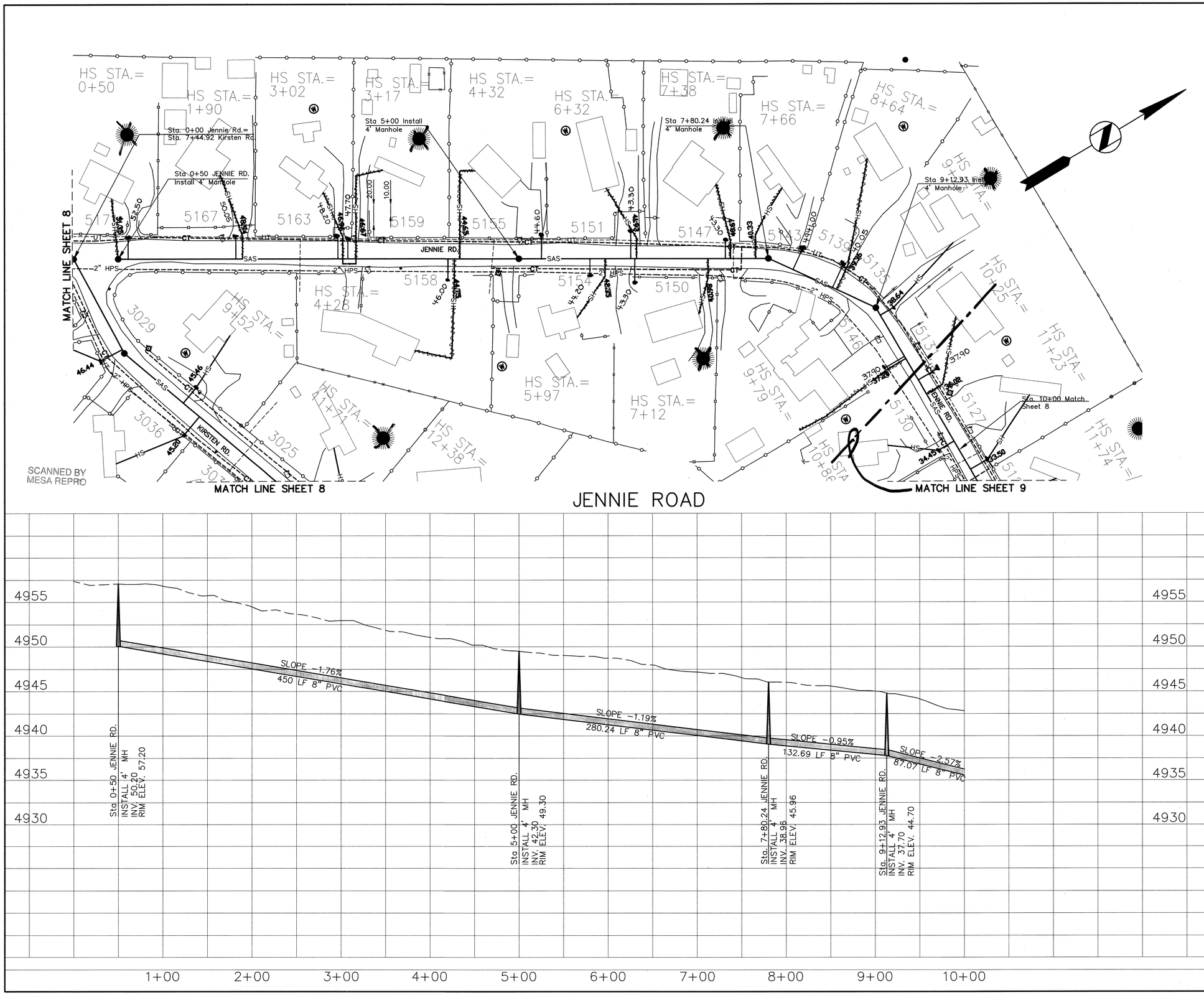

PLAN
SCALE: 1"=50'

PROFILE
SCALE: 1"=50' HOR
1"=5' VERT

LEGEND

NEW	EXIST.	
—FM—	—FM—	FORCE MAIN
—SAS—	—SAS—	SANITARY SEWER LINE
—HS—	— — —	SAS HOUSE SERVICE
●	(S)	MANHOLE
— —	—CT—	CATV
— —	—2" HPS—	2" GAS LINE
— —	—6"VHPS—	6" GAS LINE
— —	—UT—	UNDERGROUND TELEPHONE LINE
		SEPTIC TANK
— —	—UE—	UNDERGROUND ELECTRICAL LINE
		OVERHEAD POWER POLE W/ GUY WIRE
	(W)	WELL

"AS RECORDED"
From information provided by the contractors
By DS Date 12/9/98

HDR
HDR Engineering, Inc.

BERNALILLO COUNTY
PUBLIC WORKS DEPARTMENT

TITLE: COORS PARK AND DESERT PALMS SEWER PROJECT
JENNIE ROAD

Design Review Committee	City Engineer Approval	Last Design Update	Mo./Day/Yr.	Mo./Day/Yr.

PROJECT NO.	FILE NAME	SHEET	OF
5737.90	BC_10	10	16

AS BUILT INFORMATION

CONTRACTOR CANYON CONST DATE 1998
WORK STAKED BY — DATE
ACCEPTANCE BY HDR DATE 1998
FIELD VERIFICATION BY HDR DATE 1998
DRAWINGS CORRECTED BY HDR DATE 1998
MICRO-FILM INFORMATION
RECORDED BY DATE
NO.

BENCH MARKS
7-010, City of Albuquerque bench mark, the station is a standard ACS 3 1/4" aluminum cap riveted to a pipe 0.25' above ground and is stamped 7-010,1988". Station is located at intersection of Gun Club and Kirk Lane on the north side of intersection.

SURVEY INFORMATION
FIELD NOTES

NO.	BY	DATE

ENGINEER'S SEAL
WILLIAM F. ZIMMERMAN
NEW MEXICO
8/5/98

NO.	DATE	REMARKS	BY
		REVISIONS	
		DESIGN	

DESIGNED BY	BZ	DATE 2/1998
DRAWN BY	GRH	DATE 2/1998
CHECKED BY	JL	DATE 2/1998

P:\08429001\final\BC_10.dwg Mon Aug 03 15:12:42 1998

NOTES:

1. S.A.L. NOT TO BE LOCATED IN DRAINAGE PATHS. (i.e. SWALES, GUTTERS OR INVERTS, ETC.). LOCAL DRAINAGE TO BE DIRECTED AWAY FROM S.A.L. IN SHOULDER LOCATIONS.

2. ELECTRICAL POWER AND SUPPLY METERING TO BE COORDINATED WITH PUBLIC SERVICE COMPANY OF NEW MEXICO.

3. REFERENCE POINT: INTERSECTION OF COORS BLVD. AND KIRSTEN RD. 1456519.16 NORTH, 360172.96 EAST EQUALS STA. 1+00 ALONG COORS BLVD. BEARING N07°00'30"E EQUALS STA. 24+45.79 ALONG KIRSTEN RD. BEARING S84°05'41"E

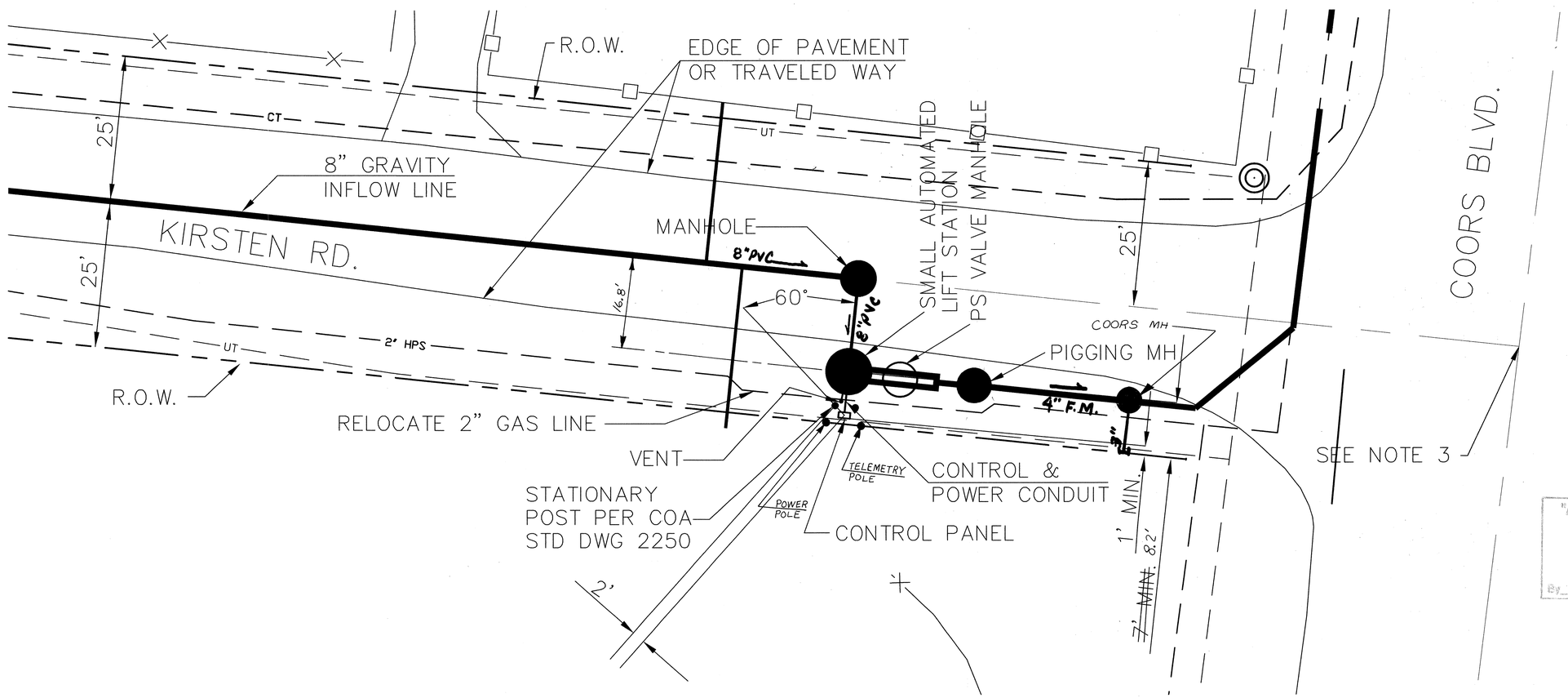

"AS RECORDED"
From information provided by the contractors
By DS Date 12/9/98

SCANNED BY MESA REPRO

PUMP STATION DETAIL

SCALE: 1" = 10'

REVISIONS	CITY OF ALBUQUERQUE
	LAYOUT PLAN Small Automatic Lift-station DWG. S.A.L. – 2 OF 8 SEPT 1996

SAL_BC11.DWG DWG 573790 11 OF 16

P:\08429001\final\SAL_BC11.dwg Mon Aug 03 15:18:59 1998

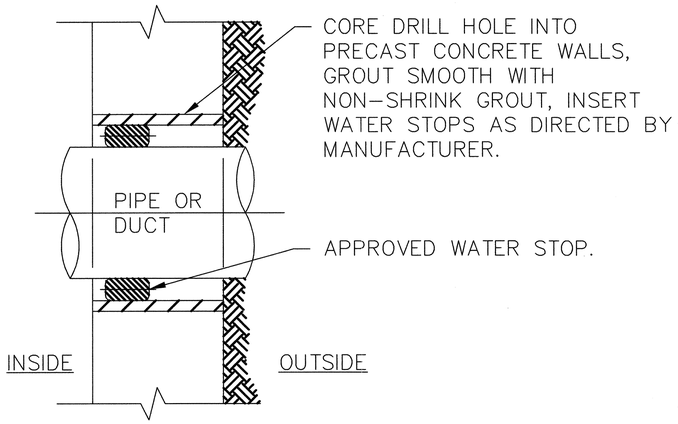

PIPE WALL PENETRATION DETAIL

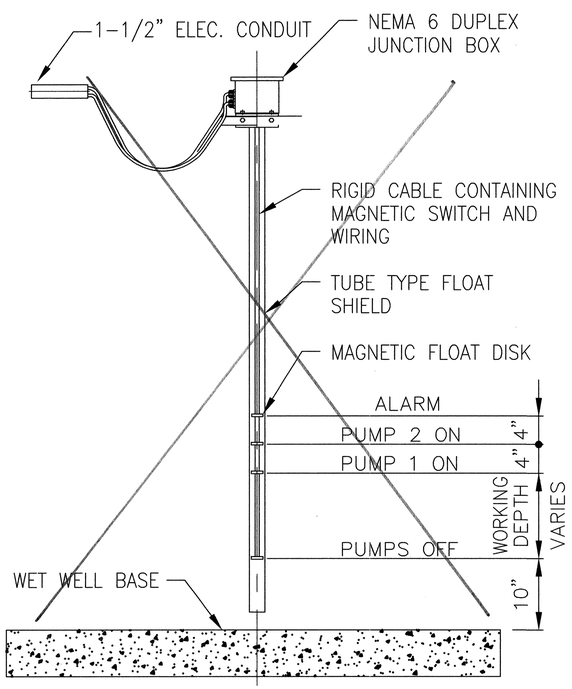

FLOAT SWITCH STAFF

INSTALLED WEIGHTED
BULB TYPE FLOAT SWITCHES

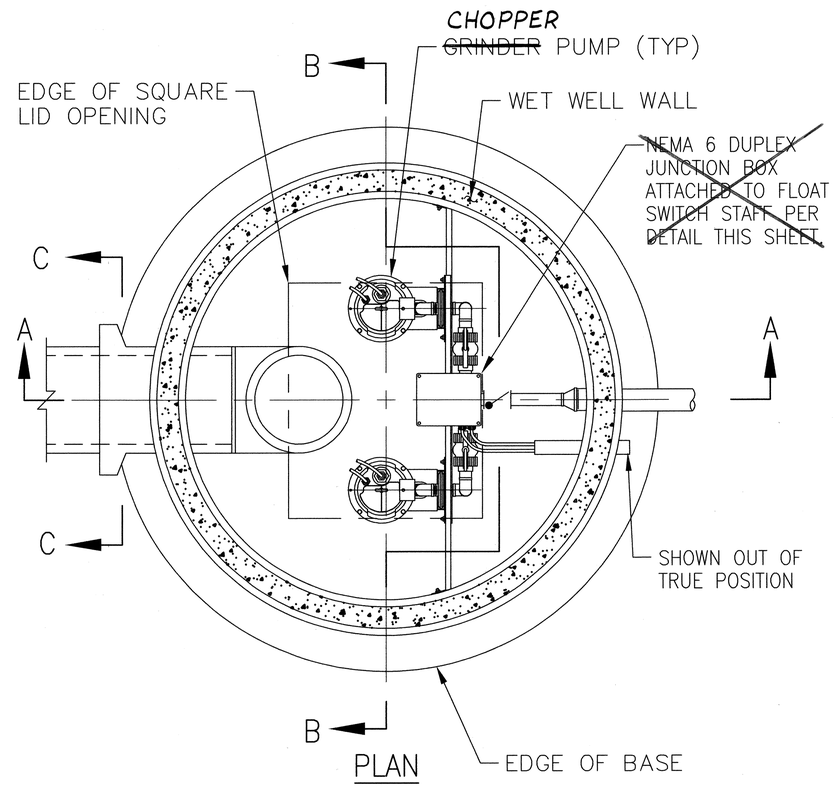

PLAN

NOTE:
ELECTRICAL JUNCTION BOXES ~~TO BE~~ INSTALLED
IN PUMP STATION ~~MANHOLE~~. VALVE MANHOLE.

NOTES:

1. VAULT SHALL BE OF 4' DIAMETER PRECAST CONCRETE SECTIONS ONLY.
2. USE NON-SHRINK GROUT FOR JOINTS, FILLETS AND PIPE PENETRATIONS.
3. COMPACT ALL BACKFILL AROUND VAULT TO 95%. PER ASTM D 1557.
4. IF POSSIBLE VAULT SHOULD HAVE A 6" EMERGENCY GRAVITY OVERFLOW PIPE CONNECTED TO OUTFALL SEWER WITH CROWN ELEVATION AT 3' MINIMUM BURY.
5. ALL INTERIOR SURFACES WILL BE COATED WITH APPROVED SEALER IN ACCORDANCE WITH COA SPECIFICATION SECTION 920.4.

REFERENCE NOTES:

SEE SHEET 4 OF 8 FOR CONSTRUCTION NOTES
SEE SHEET 4 OF 8 FOR CROSS SECTION A-A
SEE SHEET 4 OF 8 FOR CROSS SECTION B-B
SEE SHEET 4 OF 8 FOR CROSS SECTION C-C

"AS RECORDED"
From information provided by the contractors
By [illegible] Date 12/9/98

PUMPS, PIPES AND ELECTRICAL DETAILS NOT APPLICABLE.

SCANNED BY MESA REPRO

REVISIONS	CITY OF ALBUQUERQUE
	WET WELL Small Automatic Lift-station DWG. S.A.L. - 3 OF 8 SEPT 1996

P:\08429001\f:mal\SAL_BC12.dwg Mon Aug 03 15:19:31 1998

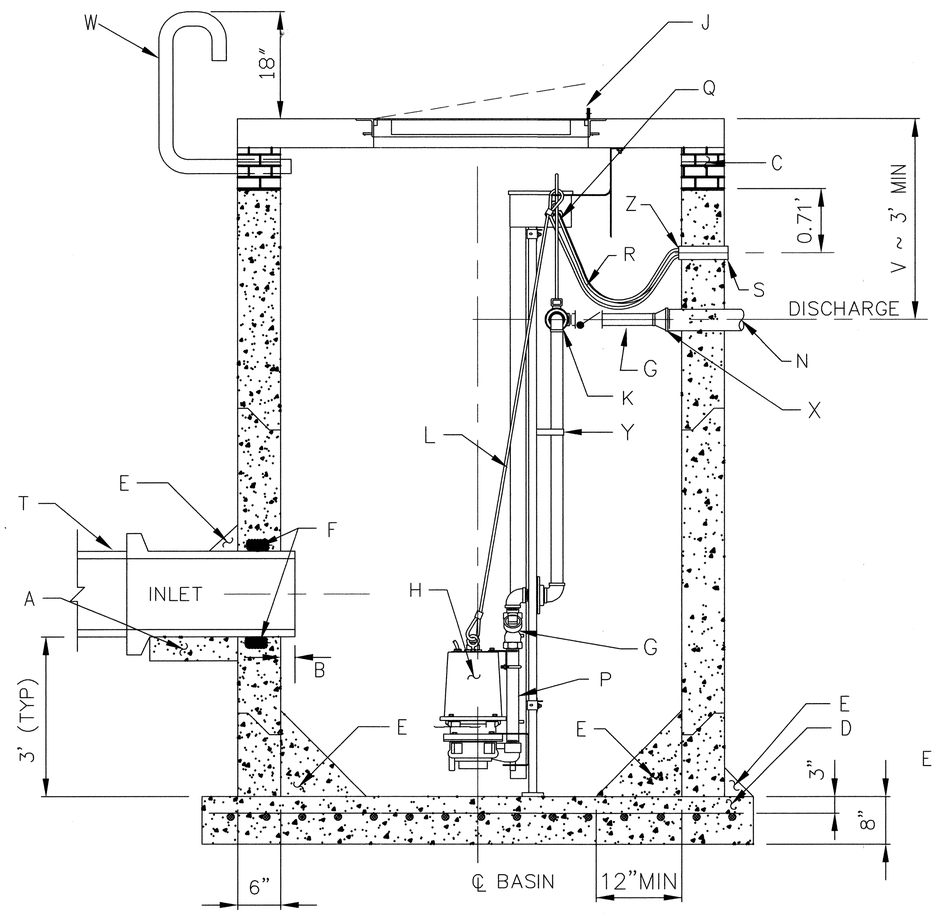

CROSS SECTION A–A

NTS

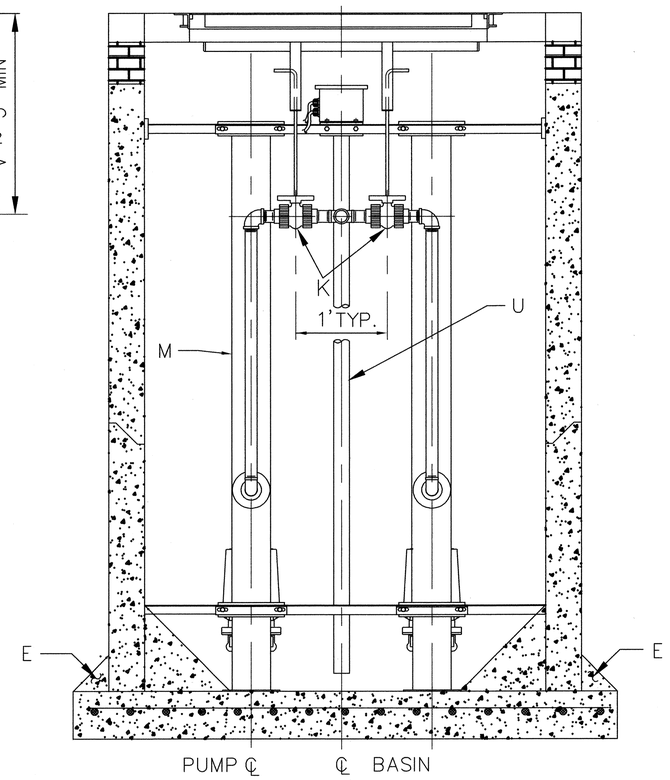

CROSS SECTION B–B

NTS

Location	Elevation
Top of Manhole	24.85
Inlet Invert	19.03
Top of Manhole Base	13.00
Invert of Discharge	18.00

NOTE:
ELECTRICAL JUNCTION BOXES TO BE INSTALLED IN PUMP STATION MANHOLE.

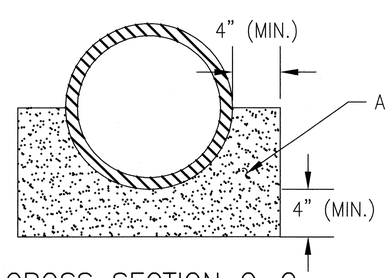

CROSS SECTION C–C

NTS

"AS RECORDED"
From information provided by the contractors
By: Date: 12/9/98

PUMPS, PIPES AND ELECTRICAL DETAILS NOT APPLICABLE.

CONSTRUCTION NOTES:

A. CONCRETE PIPE SUPPORTS SHALL EXTEND OUTSIDE OF VAULT TO BELL OF FIRST JOINT AND SHALL CRADLE PIPE TO SPRING LINE.

B. PIPE PENETRATION INTO VAULT SHALL BE FLUSH TO 2" MAX., MEASURED AT SPRINGLINE OF PIPE.

C. FRAME TO BE ADJUSTED WITH GR. MS BRICKS AS NECESSARY. PLASTER INSIDE WITH 1/2" MORTAR.

D. BASE TO BE POURED IN PLACE USING NO. 4 BARS AT 6" O.C. EA. WAY FOR VAULT DEPTH OF 16' OR GREATER. NO. 4 BARS AT 12" O.C. EA. WAY FOR VAULT LESS THAN 16' DEEP.

E. 6" GROUT FILLET ON UPPER HALF OF PIPE AND AROUND BASE, INSIDE AND OUT. (2:1 MIN)

F. APPROVED WATERSTOP. SEE DETAIL SHEET 3 OF 8.

G. 1–1/4" BALL CHECK VALVE. (QTY. 2)

H. GRINDER PUMP ON GUIDE RAIL SYSTEM WITH LIFTING ROPE, POWER CABLE AND ALARM SYSTEM.

J. VAULT LID WITH FRAME. SEE SHEET 5 OF 8.

K. 1–1/4" NPT PVC BALL VALVE WITH TRUE UNION JOINTS.

L. POLYPROPYLENE LIFTING ROPE.

M. GUIDE BARS AND FRAME FOR PUMP REMOVAL (BOLT PATTERN CAST IN PLACE PER PUMP MANUFACTURER).

N. DR21 PVC DISCHARGE PIPE (SIZE VARIES).

O. CONCRETE COVER IN SHOULDER AREAS. USE CAST IRON LID AND FRAME IN TRAVELED WAY, SEE SHEET 5 OF 8.

P. 1–1/4" NPT STAINLESS STEEL DISCHARGE PIPING INCLUDING NIPPLES AND ELBOW.

Q. STAINLESS STEEL EXTENSION HANDLES, OPEN POSITION SHOWN. (QTY. 2)

R. DIRECT BURIAL CABLE.

S. 1–1/2" ELEC. CONDUIT SLEEVE.

T. 8" PVC INLET PIPE.

U. REMOVEABLE FLOAT SWITCH STAFF. SEE SHEET 3 OF 8.

V. DEPTH TO SURFACE AS SHOWN ON PLANS

W. SCREENED VENT – 2" GALVANIZED PIPE.

X. ENLARGER – REVERSED REDUCER FITTING

Y. BRACE

Z. CAULK WITH SILICONE

REVISIONS

CITY OF ALBUQUERQUE

WET WELL
Small Automatic Lift–station

DWG. S.A.L. – 4 OF 8 SEPT 1996

SCANNED BY MESA REPRO

P:\08429001\final\SAL_BC13.dwg Mon Aug 03 15:20:15 1998

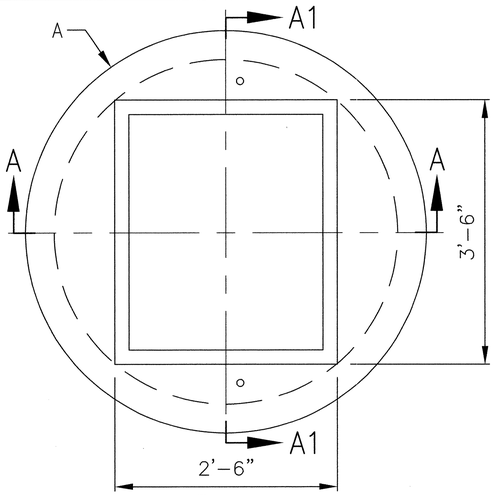

PLAN

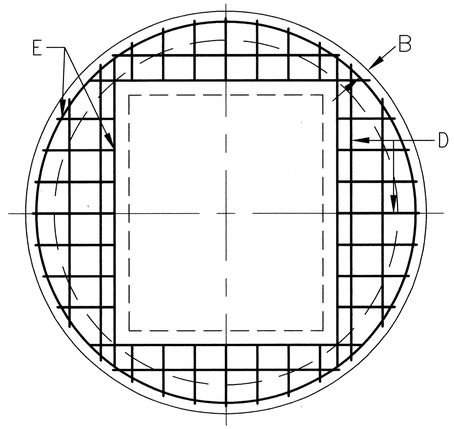

SECTION B-B, TOP MAT

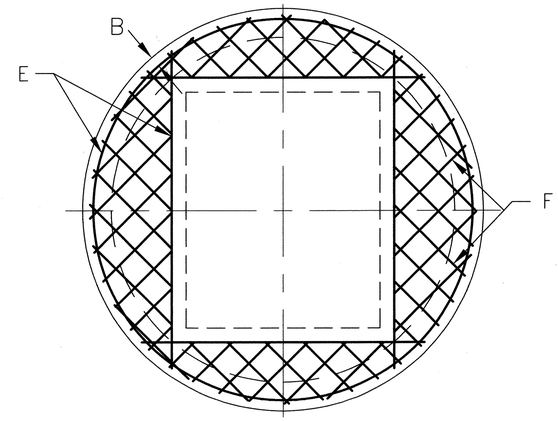

SECTION C-C, BOTTOM MAT

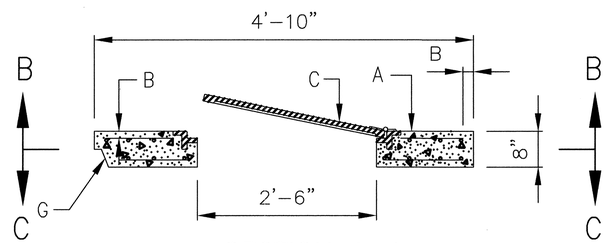

SECTION A-A

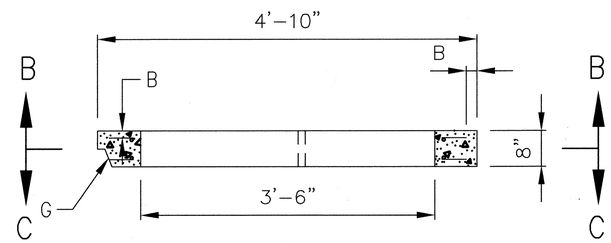

SECTION A1-A1

SHOULDER

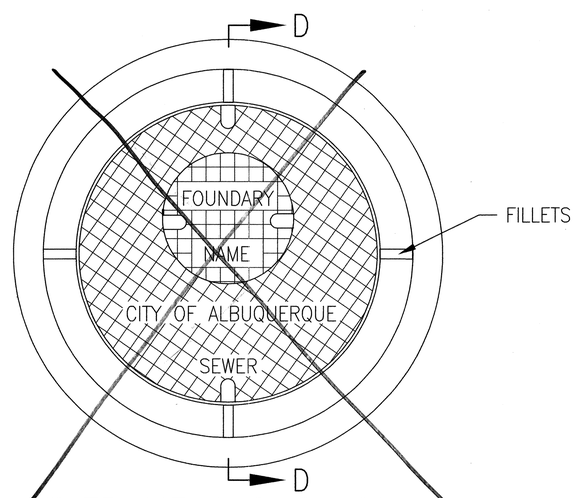

VAULT FRAME AND COVER PLAN

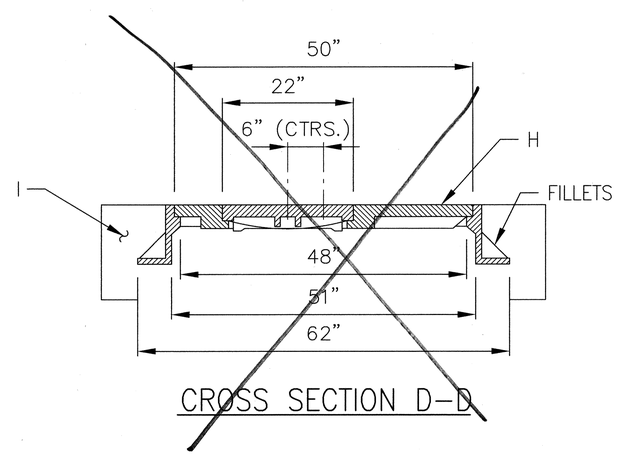

CROSS SECTION D-D

TRAVELED-WAY

CONSTRUCTION NOTES:

A. PRECAST REINF. CONC. MH COVER.

B. ALL BARS TO HAVE 1 1/2" MIN. COVER.

C. RECTANGULAR SLAB TYPE MANHOLE FRAMES WITH BOLTED, GASKET-SEALED LIDS. NEENAH R-6665-3JH HEAVY DUTY OR EQUIVALENT.

D. TOP MAT NO. 4 BARS AT 6" O.C. EA. WAY

E. NO. 4 BARS.

F. BOTTOM MAT NO. 4 BARS 6" O.C. EA. WAY

G. WHEN PRECAST M.H. SECTIONS ARE USED, COVER SHALL BE MODIFIED TO SHAPE OF APPROPRIATE SIZE T & G JOINT.

H. VAULT LID WITH FRAME (NEENAH R-1741-F OR EQUAL).

I. 5' x 5' CONCRETE PAD IN ALL AREAS, PAVED OR UNPAVED.

"AS RECORDED"
From Information provided by the contractors
By [illegible] Date 12/9/96

SQUARE ACCESS LID MAY BE USED WHEN LIFT STATION IS CONSTRUCTED IN SHOULDER OR BEHIND CURB.

CIRCULAR ACCESS LID MAY BE USED WHEN LIFT STATION IS CONSTRUCTED IN TRAVELED-WAY OR SHOULDER.

	CITY OF ALBUQUERQUE
REVISIONS	LIDS AND FRAMES Small Automatic Lift-station DWG. S.A.L. – 5 OF 8 SEPT 1996

SCANNED BY MESA REPRO

P:\0642901\final\SAL_BC14.dwg Mon Aug 03 15:20:45 1998

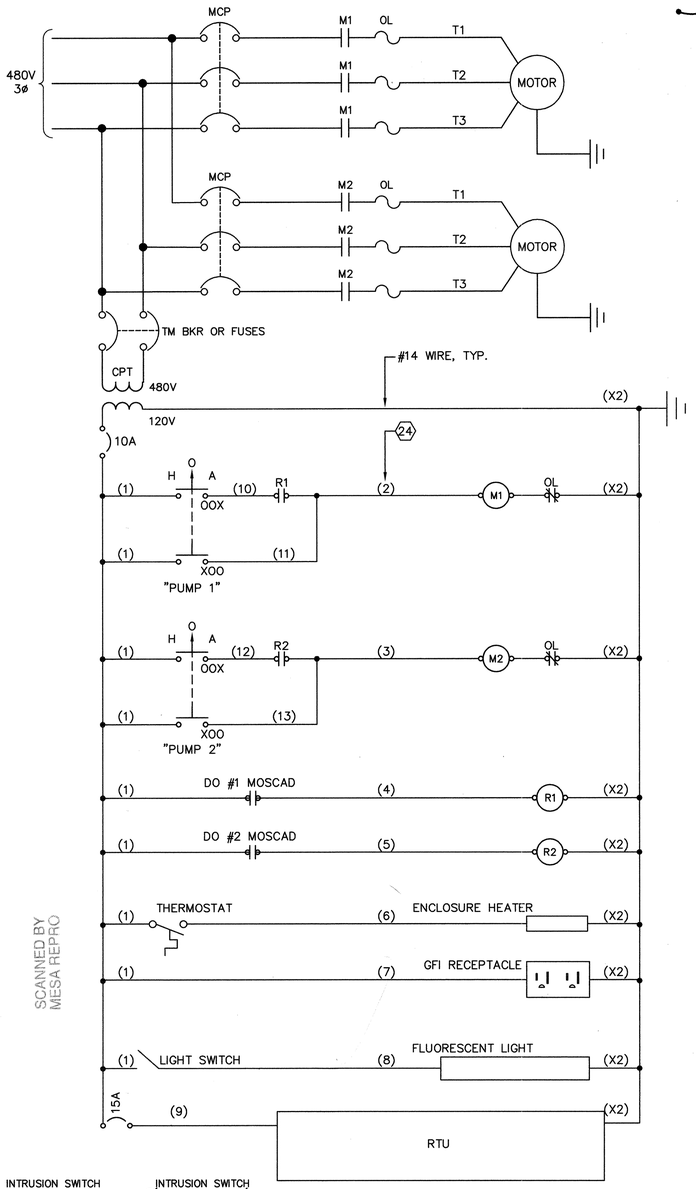

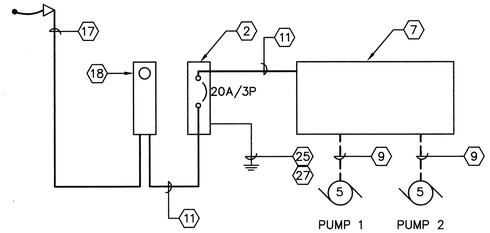

3 POWER ONE LINE

NOT TO SCALE

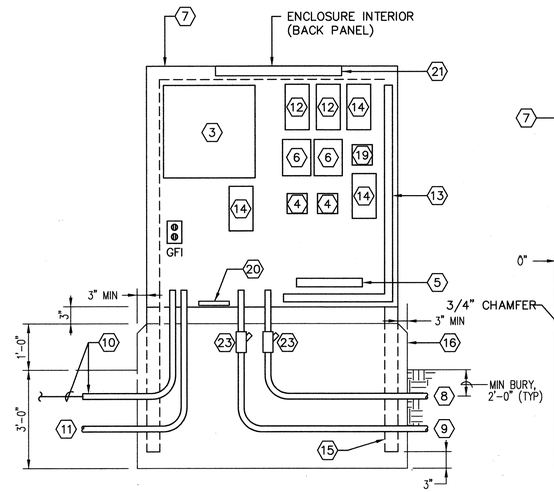

FRONT, BEHIND SWING-OUT PANEL

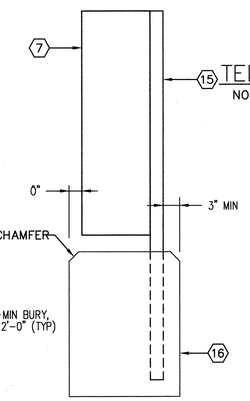

SIDE

4 CONTROL ENCLOSURE DETAIL

NOT TO SCALE

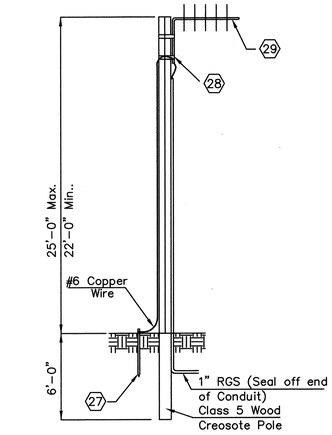

15 TELEMETRY ANTENNA MOUNTING

NOT TO SCALE

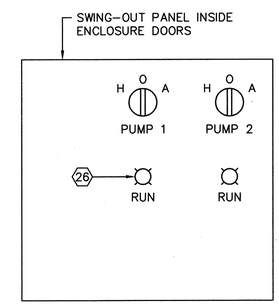

SWING-OUT PANEL, BEHIND OUTER DOOR

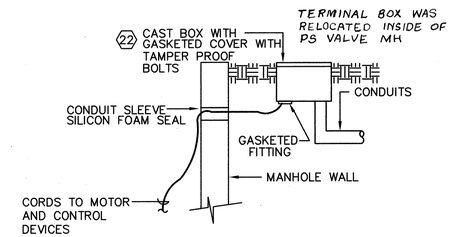

5 WIRE TERMINATION DETAIL

NOT TO SCALE

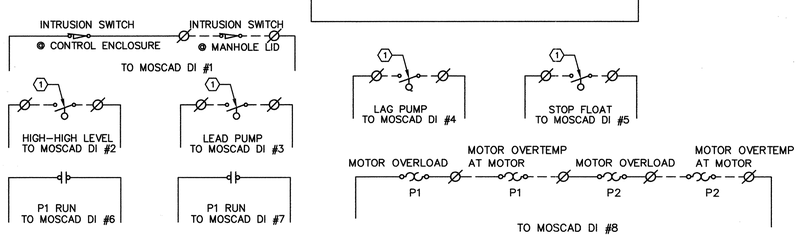

1 LIFT STATION CONTROL SCHEMATIC

NOT TO SCALE

LEGEND

SYMBOLS	DESCRIPTION
	CIRCUIT BREAKER
	MAINTAINED SELECTOR SWITCH
	MOMENTARY PUSHBUTTON SWITCH, NORMALLY OPEN
	MOMENTARY PUSHBUTTON SWITCH, NORMALLY CLOSED
	LEVEL SWITCH
	LEVEL SWITCH
	LIMIT SWITCH
	OVERLOAD/OVERTEMP ELEMENT
	RELAY, CONTACTOR, OR TIMER CONTACT, NORMALLY OPEN
	RELAY, CONTACTOR, OR TIMER CONTACT, NORMALLY CLOSED
	RELAY, CONTACTOR, OR TIMER COIL
	MOTOR
R	INDICATOR LAMP (R=RED)
	FIELD DEVICE TERMINATION
	FIELD WIRING
	INTERNAL WIRING
	WEATHERHEAD
	ELECTRIC METER
	RECEPTACLE
	UNDERGROUND CONDUIT/CONDUCTOR
—P—	OVERHEAD POWER

KEYED NOTES

1 LEVEL SWITCH.

2 SERVICE DISCONNECT IN NEMA 3R ENCLOSURE. FAULT CURRENT RATING: 22,000 AIC.

3 MOSCAD RTU MEETING COA STANDARDS. CONTACT JERRY MORSE WITH COA FOR DETAILS. FURNISH AND INSTALL ALL REQUIRED ACCESSORIES FOR RTU SYSTEM.

4 CONTROL RELAY.

5 TERMINAL BLOCK.

6 MOTOR STARTER, NEMA SIZE 1.

7 NEMA 3R/12 ENCLOSURE WITH TAMPER PROOF SCREW CLAMPS AND HASP AND STAPLE FOR PADLOCK. VENTED HIGH AND LOW ON ONE SIDE. DIMENSIONS TO SUIT EQUIPMENT. PROVIDE MICROSWITCH TO ALARM ENCLOSURE ENTRY. ENTIRE PANEL, INCLUDING ALL COMPONENTS AND AND WIRING, MUST BE UL 508 LABELED. ALL COMPONENTS SHALL BE IDENTIFIED WITH SUITABLE TAGS PERMANENTLY ATTACHED.

8 1"C WITH CONTROL AND ALARM CONDUCTORS TO LIFT STATION MANHOLE CAST BOX. PROVIDE QUANTITY OF #14'S REQUIRED TO IMPLEMENT CONTROL LOGIC SHOWN ON THIS SHEET.

9 PUMP CABLE BY PUMP MFR, TO LIFT STATION MANHOLE CAST BOX.

10 CONDUIT AND CABLE TO ANTENNA FROM RTU.

11 4 #10, 1" RGS C.

12 MOTOR CIRCUIT PROTECTOR, SIZED FOR MOTOR FURNISHED.

13 PLASTIC WIRING DUCT WITH COVER. MINIMUM 2" X 2".

14 THERMAL-MAGNETIC CIRCUIT BREAKER, SIZED AS REQUIRED.

15 2" X 2" X 1" STEEL ANGLE, WELDED AT CORNERS.

16 3000 PSI CONCRETE.

17 RISER CONDUIT WITH WEATHERHEAD ON POLE. LEAVE ADEQUATE CONDUCTOR LENGTH FOR TERMINATION BY PNM. USE 1" RGS C, 4#10. 2" 4 △1

18 METER PEDESTAL IN ACCORDANCE WITH PNM REQUIREMENTS. SERVICE TO BE 480V, 3ø, GROUNDED WYE. CONTRACTOR SHALL MAKE ALL SERVICE ARRANGEMENTS WITH PNM, AND SHALL INSTALL ALL REQUIRED ACCESSORIES.

19 CONTROL POWER TRANSFORMER. SIZE FOR MINIMUM 500 VA.

20 THERMOSTATICALLY CONTROLLED SPACE HEATER. MAINTAIN INTERIOR TEMPERATURE WITHIN LIMITS OF EQUIPMENT, WHEN EXTERIOR TEMPERATURE IS 0° FAHRENHEIT OR ABOVE.

21 FLUORESCENT LIGHT WITH BUILT IN SWITCH. USE 0° FAHRENHEIT BALLAST.

22 TERMINATE WIRE IN BOX USING SPLIT BOLT AND TAPE.

23 SEALING FITTING, APPLETON "EYSEF" OR EQUAL.

24 WIRE LABEL, TYP. ALL WIRING SHALL BE LABELED.

25 #6 CU GROUND. BOND TO SYSTEM NEUTRAL, METAL ENCLOSURE, AND GROUND ROD.

26 USE SEPARATE PUSH-TO-TEST BUTTON OR INCORPORATE INTO LIGHT.

27 3/4" x 10' COPPERCLAD GROUND ROD WITH EXOTHERMIC WELD (CADWELL OR EQUAL) TO THE GROUNDING CONDUCTOR.

28 INSTALL ACCORDING TO MANUFACTURER'S REQUIREMENTS.

29 VERIFY ORIENTATION OF ANTENNA WITH CITY OF ALBUQUERQUE.

"AS RECORDED"
From information provided by the contractors
By [illegible] Date 12/9/98

DAVID F. BESINGER
NEW MEXICO
12027
REGISTERED PROFESSIONAL ENGINEER
David F. Besinger
8/7/98

REVISIONS
△1 PER PNM REQ'TS, 10/21/98 DFB

CITY OF ALBUQUERQUE

ELECTRICAL ONE LINE, DETAILS, SCHEMATIC AND LEGEND
Small Automatic Lift-station

DWG. S.A.L. – 6 OF 8 AUG 1998

SAL_BC15.DWG

City Project No. 5737.90

Sheet 15 Of 16

SCANNED BY MESA REPRO

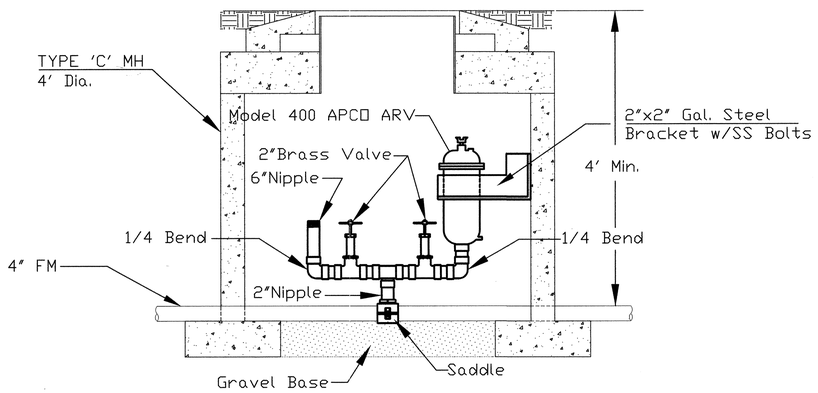

AIR RELIEF VALVE (ARV) MANHOLE

NOTE: All fittings 2" gal. steel NPT

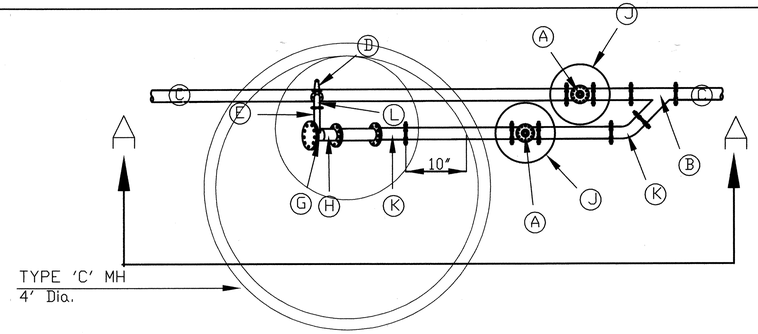

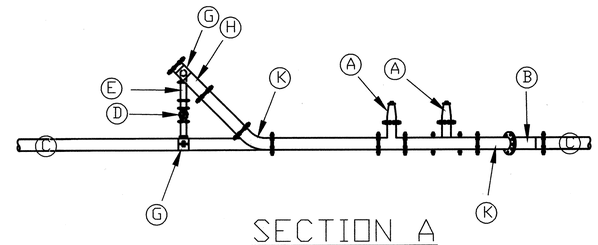

SECTION A

KEYED NOTES:

- (A) Gate Valve R.S.
- (B) 4"x4"x4" Wye
- (C) 4" DIP Length as req'd
- (D) 2" Corp Stop
- (E) 2" Gal. Steel as req'd
- (F) NOT USED
- (G) Tapping Saddle
- (H) 4"x 12" Laucher Barrel
- (I) NOT USED
- (J) Valve Can
- (K) 45° Bend
- (L) 90° Elbow

PIGGING STATION MANHOLE

"AS RECORDED"
From information provided by the contractors
By DBZ Date 2/9/98

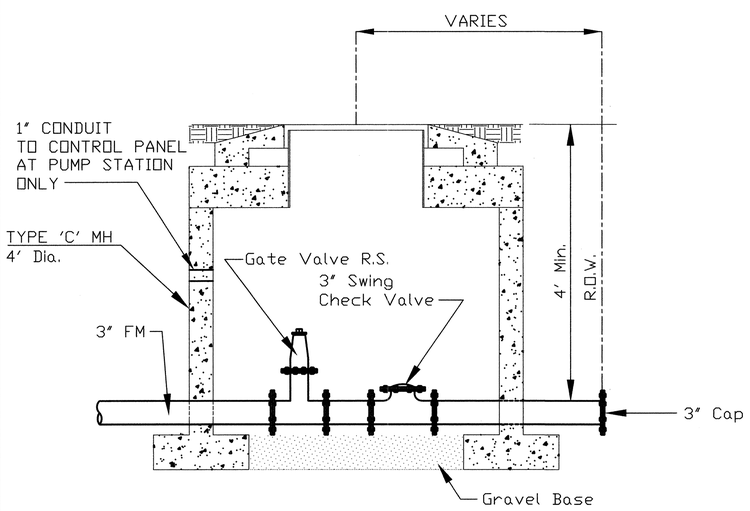

SERVICE MANHOLE

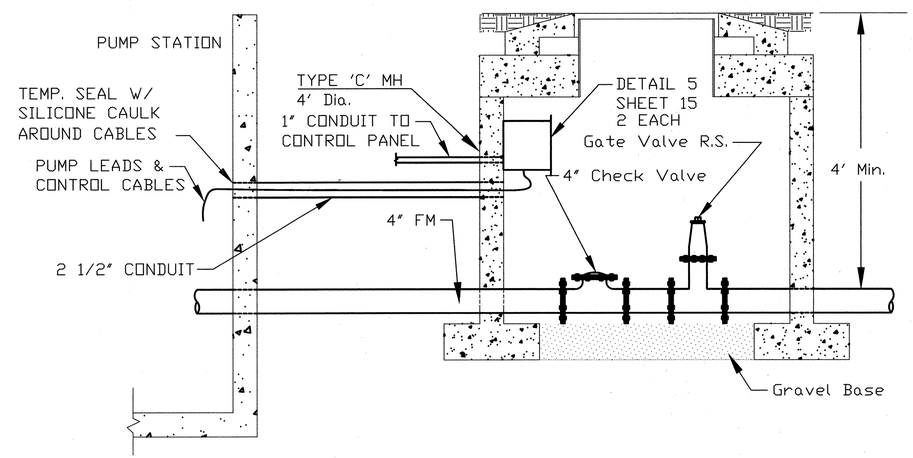

PUMP STATION VALVE MANHOLE

REVISIONS	CITY OF ALBUQUERQUE
	PIGGING MANHOLE DETAILS ARV MANHOLE DETAILS
	DWG. S.A.L. – 8 OF 8 SEPT 1996

SCANNED BY MESA REPRO

P:\08429001\final\SAL_BC16.dwg Mon Aug 03 15:21:14 1998