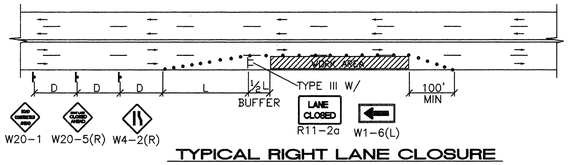

TYPICAL RIGHT LANE CLOSURE

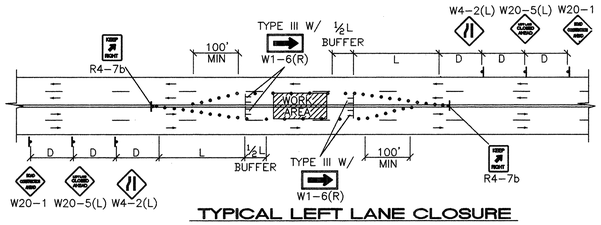

TYPICAL LEFT LANE CLOSURE

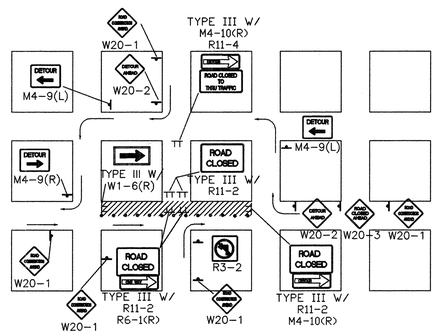

TYPICAL ONE DIRECTION DETOUR

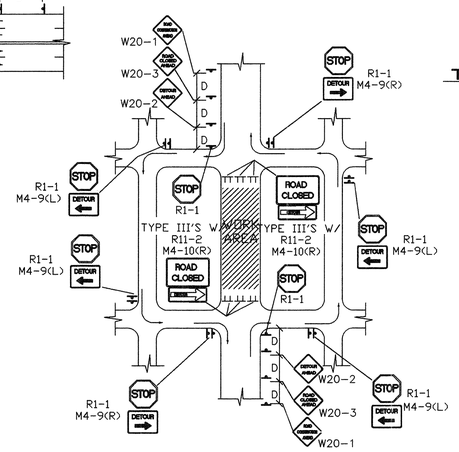

TYPICAL STREET CLOSURE

NOTE: (R1-1) BASED ON FIELD CONDITIONS.

NOTE:
MAY REQUIRE LEFT LANE CLOSURE DEPENDING ON FIELD CONDITIONS.

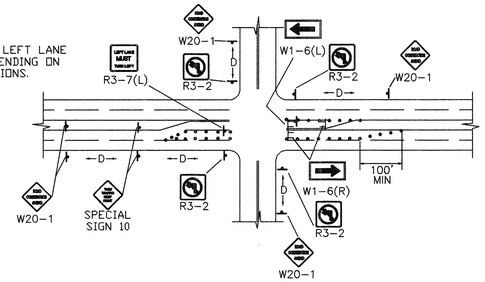

TYPICAL LANE CLOSURE AT INTERSECTION

NOTE: DEPENDING ON WORK ZONE LOCATION.

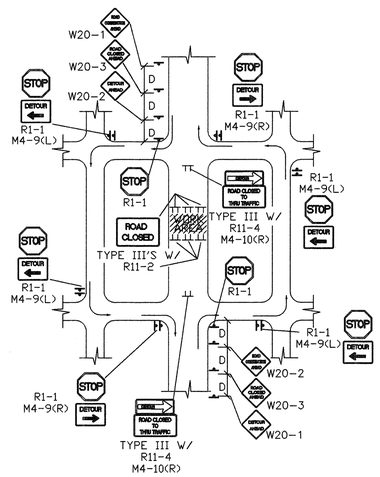

TYPICAL MID-BLOCK CLOSURE

NOTE: (R1-1) BASED ON FIELD CONDITIONS.

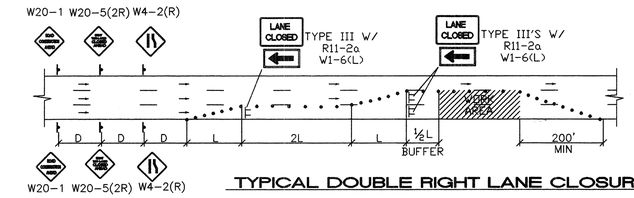

TYPICAL DOUBLE RIGHT LANE CLOSURE

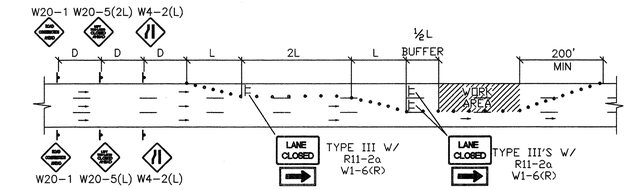

TYPICAL DOUBLE LEFT LANE CLOSURE

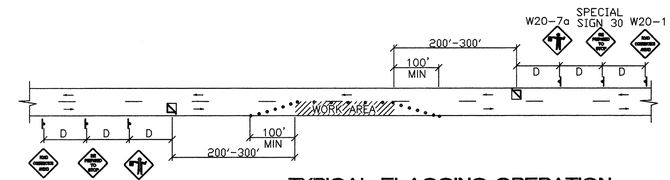

TYPICAL FLAGGING OPERATION

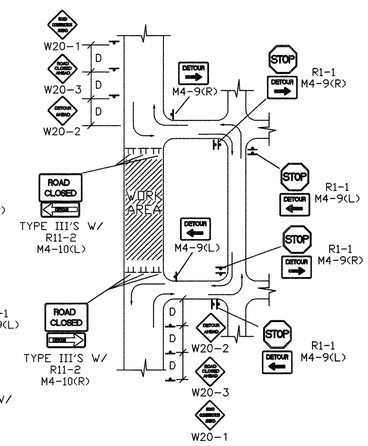

TYPICAL STREET CLOSURE

NOTE: (R1-1) BASED ON FIELD CONDITIONS.

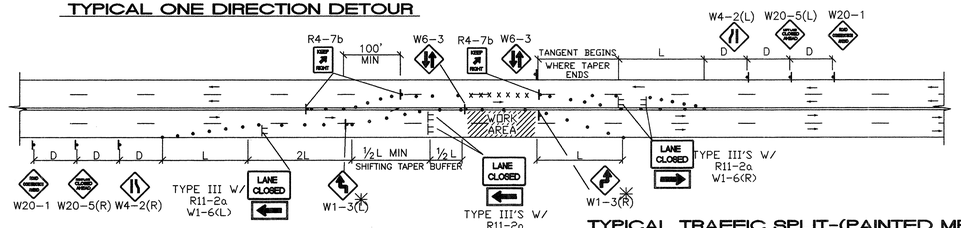

TYPICAL TRAFFIC SPLIT-(PAINTED MEDIAN)

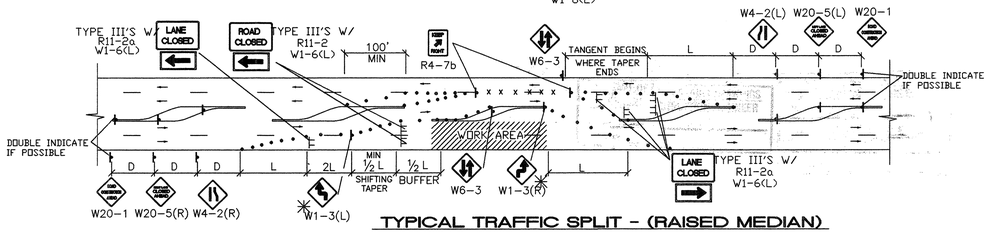

TYPICAL TRAFFIC SPLIT - (RAISED MEDIAN)

TRAFFIC SPLIT NOTES:

1. THE OFFSET DISTANCE MUST BE CALCULATED IN ALL SHIFTING TAPERS. THE OFFSET DISTANCES SHALL INCLUDE LANE WIDTHS PLUS MEDIAN WIDTHS.
2. 1/2 L IS THE MINIMUM DISTANCE FOR SHIFTING TAPERS.
3. REVERSE CURVES MAY BE IMPLEMENTED. ALL CURVE DATA SHALL BE CALCULATED.
4. MEDIAN REMOVAL SHALL BE REQUIRED IF 1/2 L OR REVERSE CURVE IS NOT SUFFICIENT. MEDIAN REMOVAL SHALL TAKE PLACE BEFORE SPLITS.
5. REDUCED SPEED MAY BE CONSIDERED.
6. ✳ USE W1-3 FOR 30 MPH OR LESS, W1-4 FOR SPEED 35 MPH OR GREATER.

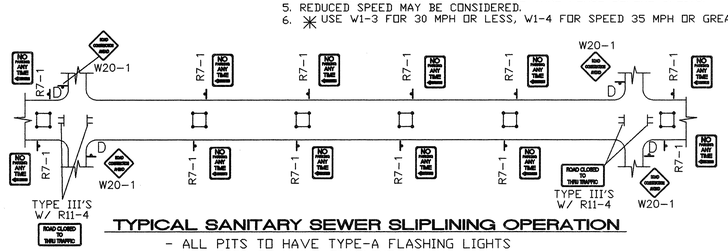

TYPICAL SANITARY SEWER SLIPLINING OPERATION

- ALL PITS TO HAVE TYPE-A FLASHING LIGHTS
- ALL PITS TO HAVE FLAGLINE

GENERAL NOTE:

ALL CONSTRUCTION WARNING SIGNS SHALL HAVE A BLACK LEGEND ON A ORANGE BACKGROUND.

⚠ ALL ADVANCE WARNING SIGNS SHALL BE A MINIMUM OF 36' THIRTY SIX INCHES BY 36' THIRTY SIX INCHES IN SIZE AND SHALL HAVE ONE WARNING LIGHT.

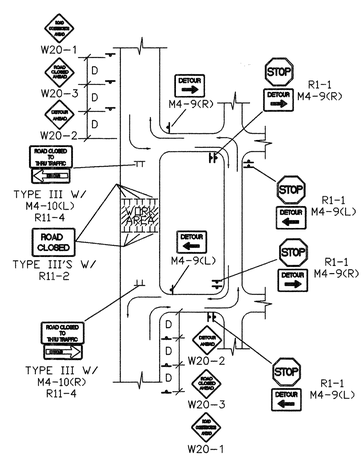

TYPICAL STREET CLOSURE

NOTE: (R1-1) BASED ON FIELD CONDITIONS.

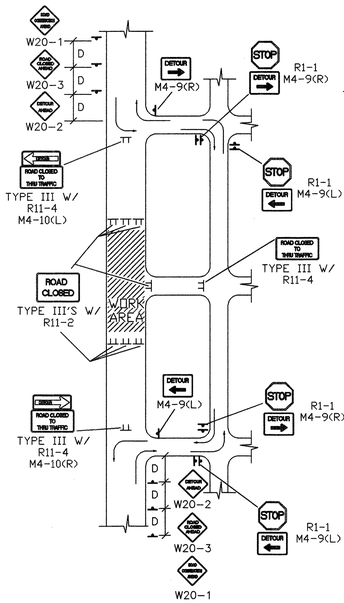

TYPICAL STREET CLOSURE

NOTE: (R1-1) BASED ON FIELD CONDITIONS.

SCANNED BY MESA REPRO

SURVEY INFORMATION		
FIELD NOTES		
1	ALS	1/97

BENCH MARKS

ACS MONUMENT "1-M10" LOCATED AT THE SOUTHEAST CORNER OF SAGE RD. & UNSER BLVD.
ELEV. = 5079.88

TBM: RIM OF SOUTHWESTERLY MANHOLE AT SAPPHIRE ST. & UNSER BLVD.
ELEV. = 5035.84

AS-BUILT INFORMATION

CONTRACTOR	Sparling	
WORK STAKED BY	Sparling	DATE 8/00
INSPECTOR'S NOTIFICATION BY	Sparling	DATE 8/00
FIELD VERIFICATION BY	Sparling	DATE 8/00
DRAWINGS CORRECTED BY	Sparling	DATE 8/00

MICRO-FILM INFORMATION

RECORDED BY	DATE
NO.	

ENGINEER'S SEAL

FRED C. ARFMAN STATE OF NEW MEXICO 7322 REGISTERED PROFESSIONAL ENGINEER

NO.	DATE	REVISIONS	BY
⚠	9/24/97	REVISED GENERAL NOTE	J.D.L.

DESIGN		
DESIGNED BY	MJC	DATE 05/98
DRAWN BY	EMS	DATE 05/98
CHECKED BY	FCA	DATE 05/98

ISAACSON & ARFMAN, P.A.
Consulting Engineering Associates
128 Monroe Street N.E.
Albuquerque New Mexico
9212TRF2.DWGanw 07/24/98

CITY OF ALBUQUERQUE
PUBLIC WORKS DEPARTMENT
ENGINEERING GROUP

TITLE: DESERT SPRINGS SUBDIVISION, UNIT TWO

TRAFFIC CONTROL

TYPICAL TRAFFIC CONTROL & SIGNING EXAMPLES (REF MUTCD)

Design Review Committee	City Engineer Approval	Last Design Update	Mo./Day/Yr.	Mo./Day/Yr.
APPROVED DESIGN REVIEW COMMITTEE				

City Project No.	Zone Map No.	Sheet	Of
5785.82	M-10	15	15