AFD FIRE STATION 20 + APD COMMUNITY POLICE SUBSTATION

CITY OF ALBUQUERQUE FIRE DEPARTMENT
NORTH DOMINGO BACA PARK
ALBUQUERQUE, NEW MEXICO

OFF-SITE IMPROVEMENTS

CORONA AVE and WYOMING BLVD. NE

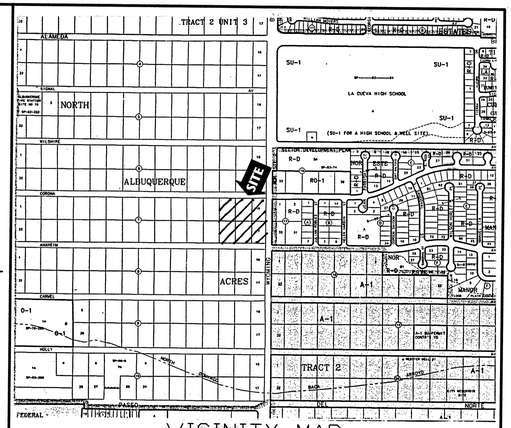

VICINITY MAP
ZONE ATLAS MAP C-19-Z

INDEX OF DRAWINGS

FOR INFORMATION ONLY

SEQUENCE NO.	SHEET NO.	DESCRIPTION
1	1	TITLE SHEET
2	2	WYOMING PLAN and PROFILE
3	3	CORONA PLAN and PROFILE
4	4	CORONA SANITARY SEWER PLAN and PROFILE
5	5	TYPICAL SECTIONS
6	6	~~TRAFFIC~~, TELEPHONE, and GAS EXTENSIONS
7	7	PERMANENT TRAFFIC CONTROL
8	8	TYPICAL TRAFFIC CONTROL & SIGNING EXAMPLES
9	9	SIGNING AND CONSTRUCTION TRAFFIC CONTROL STANDARDS
10	TS-16	FOUNDATION DETAILS TYPE II AND TYPE III STANDARDS
11	TS-20	PULL BOX DETAILS
12	TS-34	HAZARD IDENTIFICATION BEACON DETAILS
13	TS-36	MASTARM BEACON DETAILS

GENERAL NOTES

1. ALL WORK DETAILED ON THESE PLANS TO BE PERFORMED UNDER CONTRACT SHALL, EXCEPT AS OTHERWISE STATED OR PROVIDED FOR HEREON, BE CONSTRUCTED IN ACCORDANCE WITH THE CITY OF ALBUQUERQUE STANDARD SPECIFICATIONS FOR PUBLIC WORKS CONSTRUCTION 1986 EDITION AS AMENDED WITH UPDATE NO. 6.
2. PRIOR TO CONSTRUCTION, THE CONTRACTOR SHALL EXCAVATE AND VERIFY THE HORIZONTAL AND VERTICAL LOCATIONS OF ALL OBSTRUCTIONS. SHOULD A CONFLICT EXIST, THE CONTRACTOR SHALL NOTIFY THE ENGINEER SO THAT THE CONFLICT CAN BE RESOLVED WITH MINIMUM DELAY.
3. TWO (2) WORKING DAYS PRIOR TO ANY EXCAVATION, CONTRACTOR MUST CONTACT LINE LOCATING SERVICE @ 260-1990 FOR LOCATION OF EXISTING UTILITIES.
4. WARNING – THE ENGINEER HAS UNDERTAKEN NO VERIFICATION OF THE EXISTENCE, LOCATION, SIZE, DEPTH, OR TYPE OF UNDERGROUND UTILITY WITHIN THE CONSTRUCTION AREA AND MAKES NO REPRESENTATION PERTAINING TO THESE UTILITIES. THE UTILITIES THAT HAVE BEEN SHOWN ARE BASED ON AVAILABLE INFORMATION FROM THE OWNER, UTILITY COMPANIES, GOVERNING AGENCY, OR OTHERS. THIS INFORMATION MAY BE INCOMPLETE, INACCURATE, OR OBSOLETE. THE CONTRACTOR SHALL, CONTACT THE LINE LOCATION SERVICE AT 260-1990 AT LEAST TWO (2) FULL WORKING DAYS PRIOR TO START OF CONSTRUCTION TO HAVE THE UTILITIES SPOTTED. THE CONTRACTOR SHALL BE SOLELY RESPONSIBLE FOR MAINTAINING THE EXISTING UTILITIES THROUGHOUT THE CONSTRUCTION OF THIS PROJECT. THE CONTRACTOR SHALL BE SOLELY RESPONSIBLE FOR REPAIR OR REPLACEMENT OF ANY UTILITIES DAMAGED DURING CONSTRUCTION TO THE SATISFACTION OF THE GOVERNING AUTHORITIES HAVING JURISDICTION OVER THE UTILITY THAT HAS BEEN DAMAGED.
5. TRAFFIC CONTROL: FIVE (5) WORKING DAYS PRIOR TO BEGINNING CONSTRUCTION, THE CONTRACTOR SHALL SUBMIT TO THE CONSTRUCTION COORDINATION DIVISION A DETAILED CONSTRUCTION SCHEDULE. TWO (2) WORKING DAYS PRIOR TO CONSTRUCTION, THE CONTRACTOR SHALL OBTAIN A BARRICADING PERMIT FROM THE CONSTRUCTION COORDINATION DIVISION. CONTRACTOR SHALL NOTIFY BARRICADE ENGINEER (768-2551) PRIOR TO OCCUPYING AN INTERSECTION. SEE SECTION 19 OF THE SPECIFICATIONS. ALL STREET STRIPING ALTERED OR DESTROYED SHALL BE REPLACED BY CONTRACTOR TO LOCATION AND IN KIND AS EXISTING AT NO ADDITIONAL COST TO THE OWNER.
6. THE CONTRACTOR SHALL PROMPTLY CLEAN UP ANY MATERIAL EXCAVATED WITHIN THE PUBLIC RIGHT-OF-WAY SO THAT THE EXCAVATED MATERIAL IS NOT SUSCEPTIBLE TO BEING WASHED DOWN THE STREET.
7. THE CONTRACTOR IS RESPONSIBLE FOR PROTECTING AND MAINTAINING ALL EXISTING MONUMENTATION CONTROLS. IN THE EVENT OF INADVERTENT DESTRUCTION OR ALTERATION THE CONTRACTOR MUST IMMEDIATELY NOTIFY THE CITY CHIEF SURVEYOR.
8. ALL EXCAVATION, TRENCHING, AND SHORING ACTIVITIES MUST BE CARRIED-OUT IN ACCORDANCE WITH OSHA 29 CFR 1926.650.

LARRY READ & ASSOCIATES
Civil Engineers
12836-B Lomas Blvd., N.E.
Albuquerque, New Mexico 87112
(505) 237-8421

REV.	SHEETS	CITY ENGINEER	DATE	USER DEPARTMENT	DATE	USER DEPARTMENT	DATE

ENGINEERS STAMP & SIGNATURE

LAWRENCE D. READ — NEW MEXICO — 10998 — REGISTERED PROFESSIONAL ENGINEER
9/30/99

APPROVALS	ENGINEER	DATE
DRC Chairman		10-12-99
Transportation		10-13-99
Water/Wastewater		9-30-99
Hydrology		9-30-99
C.I.P.		
Constr. Mngmt.		
Constr. Coord.		10-4-99

* * * * * * * * * * * * *

APPROVED FOR CONSTRUCTION

10/22/99
City Engineer — Date

City Project No. (OFFSITE) 6042.91

Sheet 1 Of 13

DRB CASE NO. 99-7

NOTE:
ALL BOULDERS REMOVED FROM THE RIGHT-OF-WAY SHALL BE STOCK PILED ON-SITE FOR FUTURE USE.

STA 11+97.63 TO STA 16+76.30
BUILD 24' WIDE
ASPHALT PAVED ROADWAY
PER SHEET 5 of 13 AND
COA STD DWG 2408.

STA 11+97.63 TO STA 16+76.30
52' RT BUILD STD CURB AND
GUTTER PER COA STD DWG 2415

STA 11+97.63 TO STA 16+76.30
28' RT BUILD ASPHALT CURB PER
COA STD DWG 2415

C2– CURB RETURN
STA. 14+09.22, 52.00' RT.

PT.	FL ELEV.
P.C.	87.48
1	87.70
2	87.93
3	88.15
P.T.	88.37

F.L. CURVE DATA
Δ = 86°46'08"
R = 30.00'
T = 28.35'
L = 45.43'
Dc = 190°59'09"
CURB RETURN
STA. 14+39.14, 80.31' RT.

C3– CURB RETURN
STA. 14+81.89, 80.30' RT.

PT.	FL ELEV.
P.C.	88.37
1	88.30
2	88.22
3	88.15
P.T.	88.07

F.L. CURVE DATA
Δ = 86°44'57"
R = 30.00'
T = 28.34'
L = 45.42'
Dc = 190°59'09"
CURB RETURN
STA. 15+11.88, 52.00' RT.

C4– CURB RETURN
STA. 13+79.17, 13.18' RT.

PT.	FL ELEV.
P.C.	87.32
1	87.62
2	87.91
3	85.25
P.T.	87.67

F.L. CURVE DATA
Δ = 90°05'36"
R = 30.00'
T = 30.05'
L = 47.17'
Dc = 190°59'09"
CURB RETURN
STA. 14+09.22, 43.14' RT.

C5– CURB RETURN
STA. 15+11.88, 41.78' RT.

PT.	FL ELEV.
P.C.	88.52
1	88.68
2	88.83
3	88.27
P.T.	87.71

F.L. CURVE DATA
Δ = 85°50'19"
R = 30.00'
T = 27.90'
L = 44.95'
Dc = 190°59'09"
CURB RETURN
STA. 15+39.70, 11.82' RT.

EXIST 6' DIA MH
RIM 5385.36
ADJUST TO FINISH
GRADE RIM EL 5386.52

CL WYOMING ROW STA 11+47.59 =
CL CORONA STA 26+91.80
CL INTERSECTION 5387.54

TEMPORARY EXTRUDED ASPHALT CURB ON TOP OF PAVEMENT FROM NEW CURB ON CORONA TO EXISTING CURB ON WYOMING. R = 30'

CENTERLINE
OF CONSTRUCTION
AND RIGHT-OF-WAY

REMOVE 91LF EXTRUDED
ASPHALT CURB

STA 13+79 TO STA 15+39, 11.82' RT
TO 43.14' RT BUILD TEMPORARY ASPHALT
PAVEMENT PER DETAIL SHEET 4 OF 13.
BUILD TEMP ASPHALT CURB FROM EXIST
PAVEMENT TO NEW CURB AND GUTTER PER
COA STD DWG 2415. SEE CURVE TABLES.
TRANSITION CURB 9" TO 6" 10' BEYOND P.C. & P.T.

ANAHEIM AVE. N.E.

WYOMING BOULEVARD N.E.

EXIST WINDOW G CHANNEL

C1– CURB RETURN
STA. 11+67.66, 80.05' RT.

PT.	FL ELEV.
P.C.	85.02
1	85.35
2	85.67
3	86.00
P.T.	86.32

F.L. CURVE DATA
Δ = 86°15'29"
R = 30.00'
T = 28.10'
L = 45.16'
Dc = 190°59'09"
CURB RETURN
STA. 11+97.63, 52.00' RT.

BUILD CASE J WHEELCHAIR RAMP PER COA STD DWG 2441.
BEGIN 10' WIDE ASPHALT BIKE PATH AT SOUTH END OF WHEELCHAIR RAMP

CORONA AVE.
SEE SHEET C3

REMOVE ALL EXIST FENCING

95' R

STA 11+97.63 54.38' RT
BUILD 4-1/2' BURY
FIRE HYDRANT PER
COA STD DWG 2340

NEW STORM INLET
SYSTEM SEE ENLARGED
PLAN SHEET 5 of 13

STA 11+97.76 RT TO STA 14+30
58' RT BUILD 10' WIDE SIDEWALK/
BIKE TRAIL TO APPROXIMATE LOCATION
SHOWN. PROVIDE 2" TYPE B ASPHALT
PAVEMENT OVER 8" COMPACTED SUBGRADE
RMKM SHALL APPROVE STAKED ROUTE
PRIOR TO CONSTRUCTION.

STA 14+60.58 52' RT BUILD 42'
WIDE PRIVATE ENTRANCE PER COA
STD DWG 2426 W/PCC VALLEY
GUTTER AND ASPHALT TWO LIFT
PVAMENT PER SHEET 5 of 13

STA 11+91.75, 85.09' RT
END CONSTRUCTION OF
SIDEWALK/BIKEPATH

DO NOT INSTALL EXTRUDED
ASPHALT CURB (MEDIAN)
ACROSS TEMPORARY INLET.

STA 14+39.97' RT TO
STA 14+91.75, 85.09' RT
BUILD 10' WIDE CONCRETE
SIDEWALK PER SHEET 5 of 13

REMOVE ALL EXIST FENCING

STA 16+76.15 END CONSTRUCTION
OF CURB AND GUTTER, PERMANENT
ASPHALT PAVEMENT AND EXTRUDED
ASPHALT CURB AND GUTTER

NEW 60" STORM DRAIN
TO WINDOW G CHANNEL
PER COA PROJECT 6201.91

FUTURE BRIDGE DECK
BY OTHERS

FUTURE CURB AND GUTTER
EXTENSION BY OTHERS

50 0 25 50 100
GRAPHIC SCALE (1 INCH = 50 FEET)

1"= 50' HORIZ.
1"= 10' VERT.

WYOMING BLVD., N.E.

175'
VERT. CURVE
VPI STA 12+30 5386.00
LOW 12+17.25 5386.31
M.O. +0.313'

175'
VERT. CURVE
VPI STA 16+40 5389.40
M.O. –0.179'

STA 11+47.59
FUTURE WYOMING
CONSTRUCTION
BY OTHERS

STA 11+47.59
END CONSTRUCTION
OF WYOMING BLVD
THIS PROJECT

PROFILE GRADE AT CL

CL CORONA
AVENUE

0.6110 %

0.8194 %

PROFILE OF RIGHT FLOWLINE

EXIST GRADE
AT CENTERLINE

EXISTING BRIDGE
BEYOND. SOUTH
BOUND DECK TO
BE CONSTRUCTED
BY OTHERS

NEW 60" RCP STORM DRAIN
COA PROJECT NO. 6201.91

EXIST HYBRID MANHOLE/
INLETS. REMOVE TO, SPACERS
REINSTALL TOP ADJUSTED TO NEW
GRADE

STA. 12+07, 52' RT.
NEW DOUBLE 'C' INLET
GRATE ELEV 5386.08
INV (IN) 5380.63
INV (OUT) 1280.53

STA. 12+18, 41.38' RT
EXISTING 6' DIA MH
RIM 85.36
INV. (75.31)
INV. (NEW 24") RCP 81.13

STA. 12+77, 52' RT
NEW TYPE 'A' INLET
GRATE ELEV 5386.08
INV (IN) 5381.53
INV (OUT) 5381.25

STA. 12+67, 52' RT.
NEW TYPE 'A' INLET
GRATE ELEV 5386.28
INV 5383.03

STA 16+76.30
END CONSTRUCTION OF
PAVEMENT AND CURB & GUTTER

EXISTING SOIL CEMENT LINED
WINDOW G CHANNEL
FL = 78.61

PROPOSED GRADE @ RIGHT FL

EXIST GRADE @ CL

5390 5385 5380 5375 5370 5365 5360 5355

STA 11+42.50 PVC 5386.53
5387.91 5387.60 5387.30 5386.49 5386.32 5387.74 5387.52 5387.28 5386.77 5386.44 5387.21 5386.58 5386.72 5386.99 5387.40 5387.81 5387.19 5387.36 5388.22 5387.77 5388.03 5388.47 5388.02 5388.78 5389.26 5389.00 5389.38 5388.87 5388.56
STA 11+17.50 PVT 5386.72
STA 12+27.50 PVT 5386.99
STA 15+52.50 PVC 5388.68
STA 16+40.00 PVI 5389.40
STA 16+76.30 END CONSTRUCTION 5389.34
STA 17+27.50 PVT 5389.40

10+00 11+00 12+00 13+00 14+00 15+00 16+00 17+00 18+00 19+00 20+00 21+00

LEGEND

EXIST ASPHALT PAVEMENT TO REMAIN

NEW PERMANENT ASPHALT PAVEMENT PER SHEET 5 of 13

NEW TEMPORARY ASPHALT PAVEMENT PER SHEET 4 of 13

FOR INFORMATION ONLY

AS BUILT INFORMATION
CONTRACTOR
WORK STAKED BY — DATE
INSPECTOR ACCEPTANCE BY — DATE
FIELD VERIFICATION BY — DATE
DRAWINGS CORRECTED BY — DATE
MICRO-FILM INFORMATION
RECORDED BY — DATE
NO.

BENCH MARKS
City of Albuquerque bench Mark "HEAVEN", a standard USGS brass tablet stamped "HEAVEN 1969", set in top of a concrete post flush with the ground. Located at the entrance to the "GATE OF HEAVEN" CEMETERY 0.15 miles west of the intersection of Paseo del Norte N.E. and Wyoming Blvd. N.E. Station is on the south side of Paseo del Norte N.E.
ELEV.=5378.78 feet (M.S.L.D.)

SURVEY INFORMATION
FIELD NOTES
NO. BY DATE

ENGINEER'S SEAL
LAWRENCE D. READ
NEW MEXICO
10998
REGISTERED PROFESSIONAL ENGINEER
9/30/99

NO.	DATE	REMARKS	BY
		REVISIONS	

DESIGN
DESIGNED — DATE
DRAWN BY — DATE
CHECKED BY — DATE

LARRY READ & ASSOCIATES
Civil Engineers
12836 - B Lomas Blvd., N.E.
Albuquerque, New Mexico 87112
(505) 237-8421

CITY OF ALBUQUERQUE
PUBLIC WORKS DEPARTMENT
ENGINEERING DEVELOPMENT GROUP

TITLE: ALBUQUERQUE FIRE DEPT. STATION # 20
WYOMING BLVD. CONSTRUCTION

Design Review Committee: APPROVED OCT 22 1999 DESIGN REVIEW COMMITTEE
City Engineer Approval: APPROVED OCT 22 1999 CITY ENGINEER

LAST DESIGN UPDATE — Mo./Day/Yr. — Mo./Day/Yr.

Project Phase: OFFSITE | City Project No. 6042.91 | Zone Map No. C-19 | Sheet 2 Of 13

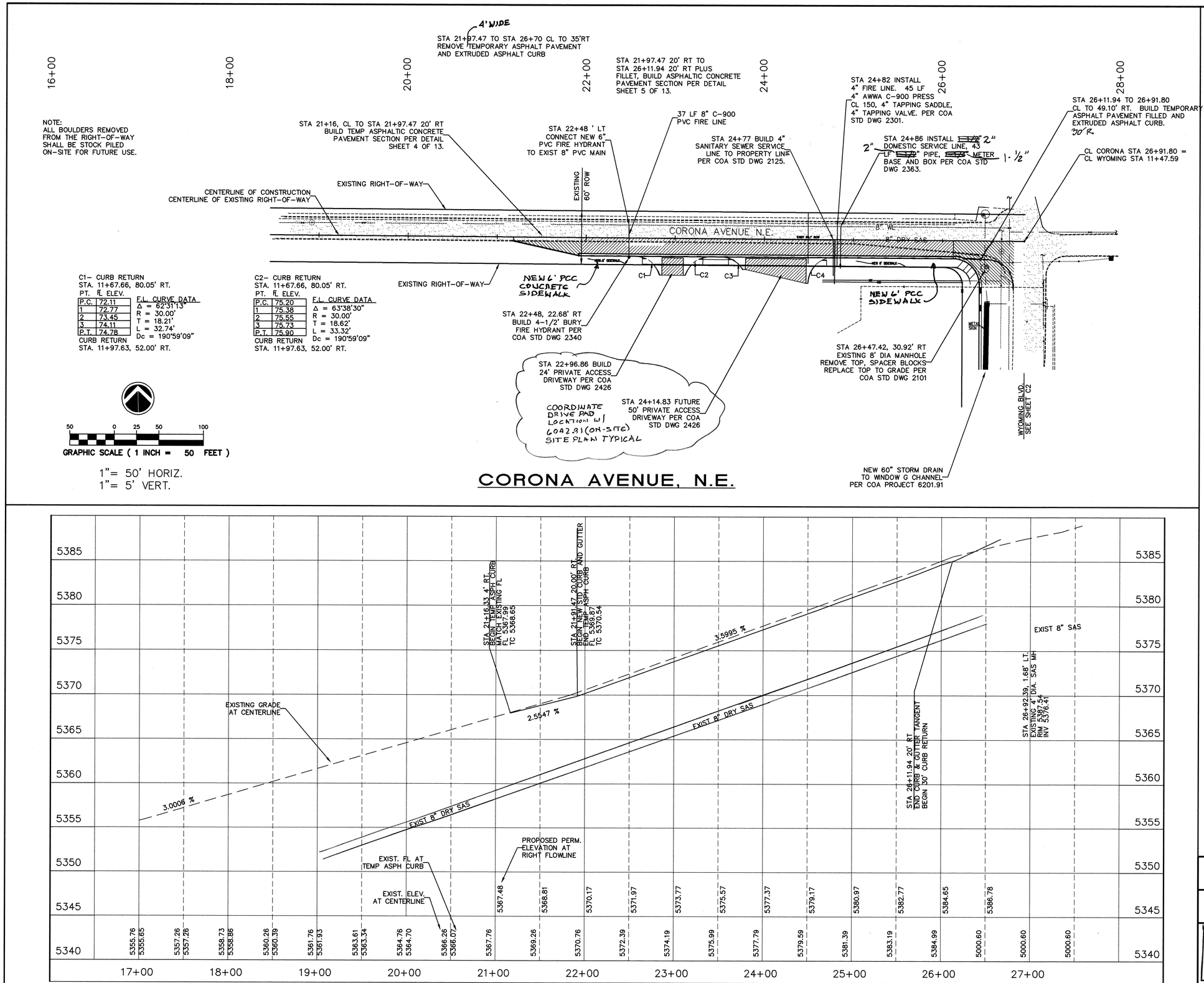

C1– CURB RETURN
STA. 11+67.66, 80.05' RT.

PT.	FL ELEV.
P.C.	72.11
1	72.77
2	73.45
3	74.11
P.T.	74.78

F.L. CURVE DATA
Δ = 62°31'13"
R = 30.00'
T = 18.21'
L = 32.74'
Dc = 190°59'09"
CURB RETURN
STA. 11+97.63, 52.00' RT.

C2– CURB RETURN
STA. 11+67.66, 80.05' RT.

PT.	FL ELEV.
P.C.	75.20
1	75.38
2	75.55
3	75.73
P.T.	75.90

F.L. CURVE DATA
Δ = 63°38'30"
R = 30.00'
T = 18.62'
L = 33.32'
Dc = 190°59'09"
CURB RETURN
STA. 11+97.63, 52.00' RT.

C3– CURB RETURN
STA. 11+67.66, 80.05' RT.

PT.	FL ELEV.
P.C.	75.60
1	76.05
2	76.50
3	76.94
P.T.	77.39

F.L. CURVE DATA
Δ = 59°05'45"
R = 29.50'
T = 16.72'
L = 30.43'
Dc = 194°13'23"
CURB RETURN
STA. 11+97.63, 52.00' RT.

C4– CURB RETURN
STA. 11+67.66, 80.05' RT.

PT.	FL ELEV.
P.C.	80.00
1	80.05
2	80.10
3	80.05
P.T.	80.00

F.L. CURVE DATA
Δ = 82°14'34"
R = 30.00'
T = 26.19'
L = 43.06'
Dc = 190°59'09"
CURB RETURN
STA. 11+97.63, 52.00' RT.

LEGEND

- EXIST ASPHALT PAVEMENT TO REMAIN
- NEW PERMANENT ASPHALT PAVEMENT PER SHEET 5 of 13
- NEW TEMPORARY ASPHALT PAVEMENT PER SHEET 4 of 13

AS BUILT INFORMATION
CONTRACTOR
WORK STAKED BY — DATE
INSPECTOR'S ACCEPTANCE BY — DATE
FIELD VERIFICATION BY — DATE
DRAWINGS CORRECTED BY — DATE
MICRO-FILM INFORMATION
RECORDED BY — DATE
NO.

BENCH MARKS
City of Albuquerque bench Mark "HEAVEN", a standard USGS brass tablet stamped "HEAVEN 1969", set in top of a concrete post flush with the ground. Located at the entrance to the "GATE OF HEAVEN"CEMETERY 0.15 miles west of the intersection of Paseo del Norte N.E. and Wyoming Blvd. N.E. Station is on the south side of Paseo del Norte N.E.
ELEV.=5378.78 feet (M.S.L.D.)

SURVEY INFORMATION
FIELD NOTES

NO.	BY	DATE

ENGINEER'S SEAL
LAWRENCE D. READ NEW MEXICO (10998) REGISTERED PROFESSIONAL ENGINEER

NO.	DATE	REMARKS	BY

REVISIONS
DESIGN
DESIGNED — DATE
DRAWN BY — DATE
CHECKED BY — DATE

FOR INFORMATION ONLY

LARRY READ & ASSOCIATES
Civil Engineers
12836 - B Lomas Blvd., N.E.
Albuquerque, New Mexico 87112
(505) 237-8421

CITY OF ALBUQUERQUE
PUBLIC WORKS DEPARTMENT
ENGINEERING DEVELOPMENT GROUP

TITLE: ALBUQUERQUE FIRE DEPT. STATION # 20
CORONA AVENUE CONSTRUCTION

Design Review Committee — APPROVED OCT 22 1999 DESIGN REVIEW COMMITTEE
City Engineer Approval — APPROVED OCT 22 1999 CITY ENGINEER
LAST DESIGN UPDATE — Mo./Day/Yr. — Mo./Day/Yr.

OFFSITE

City Project No. 6042.91 | Zone Map No. C-19 | Sheet 3 Of 13

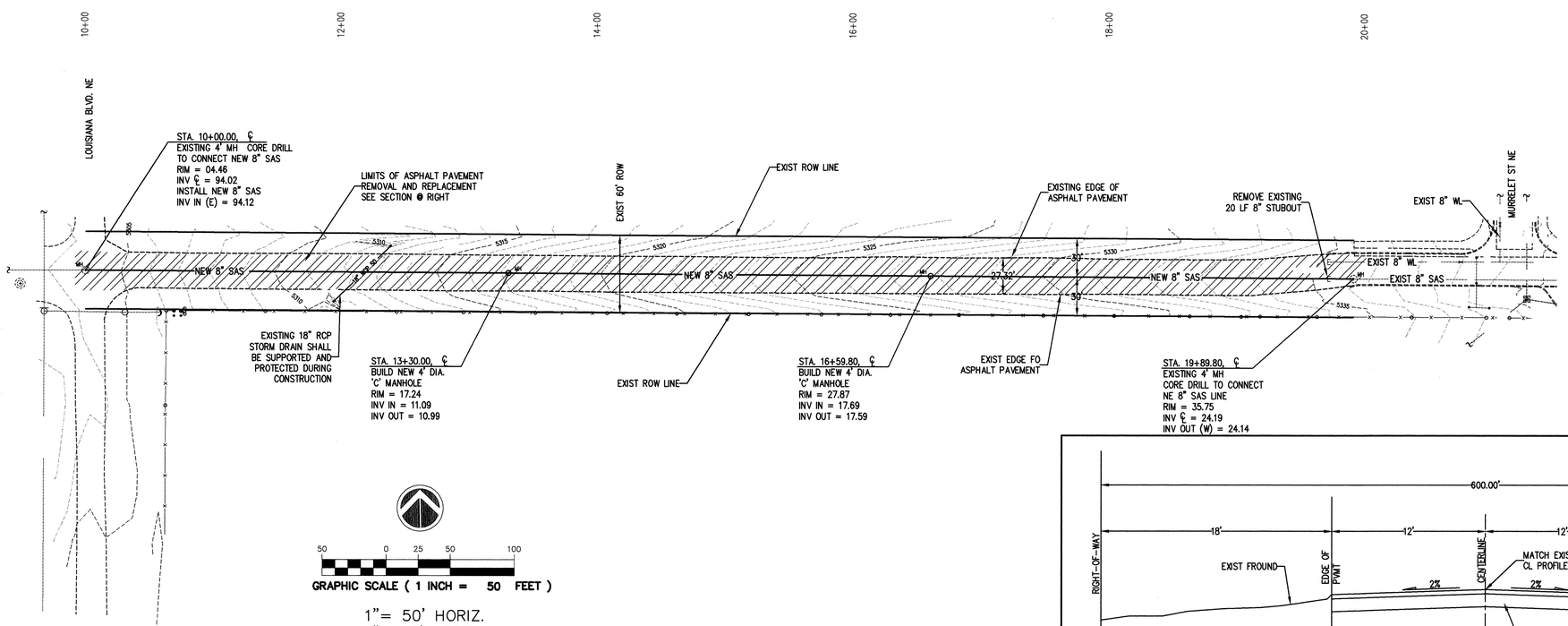

GRAPHIC SCALE (1 INCH = 50 FEET)

1"= 50' HORIZ.
1"= 10' VERT.

CORONA AVE. NE

LIMITS OF ASPHALTIC PAVEMENT REMOVAL AND REPLACEMENT

4" TEMP. ASPHALT

12" SUBGRADE COMPACT TO 95% OF MAX. DRY DENSITY PER ASTM D-1557

TEMP. PAVEMENT SECTION

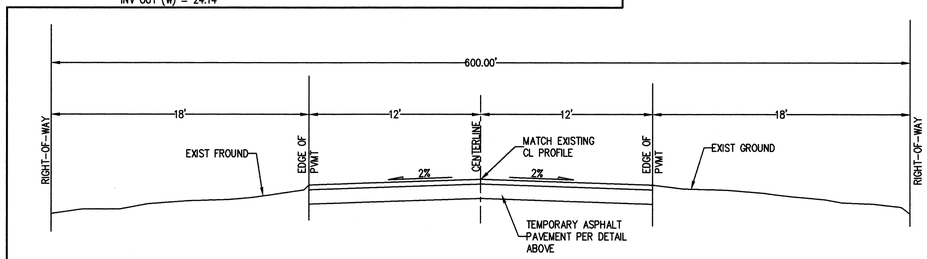

CORONA AVE. - PAVEMENT REPLACEMENT SECTION

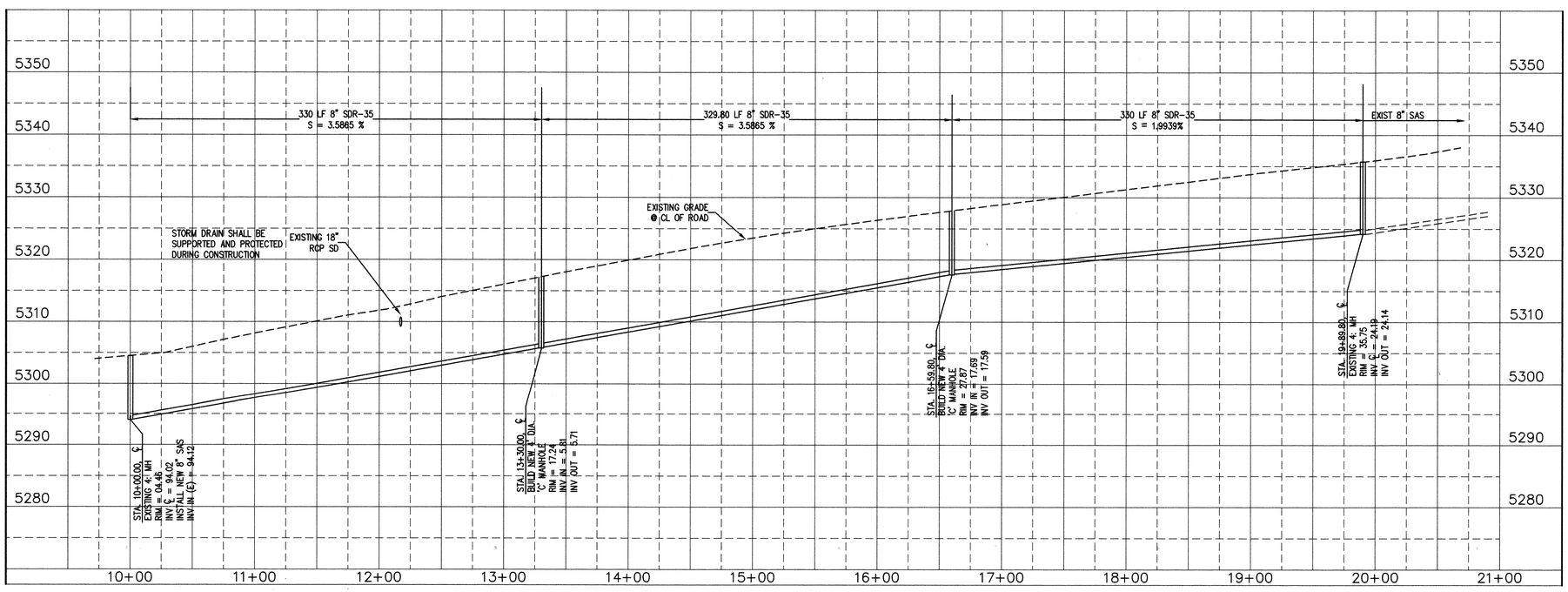

OFFSITE

FOR INFORMATION ONLY

LARRY READ & ASSOCIATES
Civil Engineers
12836-B Lomas Blvd., N.E.
Albuquerque, New Mexico 87112
(505) 237-8421

CITY OF ALBUQUERQUE
PUBLIC WORKS DEPARTMENT
ENGINEERING DEVELOPMENT GROUP

TITLE: CORONA AVENUE NE
SANITARY SEWER EXTENSION

Design Review Committee: APPROVED OCT 22 1999 DESIGN REVIEW COMMITTEE
City Engineer Approval: APPROVED OCT 22 1999 CITY ENGINEER

LAST DESIGN UPDATE	Mo./Day/Yr.	Mo./Day/Yr.

City Project No.	Zone Map No.	Sheet	Of
6042.91	C-19	4	13

AS BUILT INFORMATION

CONTRACTOR		DATE
WORK STAKED BY		DATE
INSPECTOR ACCEPTANCE BY		DATE
FIELD LOCATION BY		DATE
DRAWINGS CORRECTED BY		DATE

MICRO-FILM INFORMATION

RECORDED BY	DATE
NO.	

BENCH MARKS

City of Albuquerque bench Mark "HEAVEN", a standard USGS brass tablet stamped "HEAVEN 1969", set in top of a concrete post flush with the ground. Located at the entrance to the "GATE OF HEAVEN" CEMETERY 0.15 miles west of the intersection of Paseo del Norte N.E. and Wyoming Blvd. N.E. Station is on the south side of Paseo del Norte N.E.
ELEV.=5378.78 feet (M.S.L.D.)

SURVEY INFORMATION

FIELD NOTES

NO.	BY	DATE

ENGINEER'S SEAL

LAWRENCE D. READ
NEW MEXICO
10998
REGISTERED PROFESSIONAL ENGINEER
9/13/99

NO.	DATE	REMARKS	BY

REVISIONS

DESIGN

DESIGNED		DATE
DRAWN BY		DATE
CHECKED BY		DATE

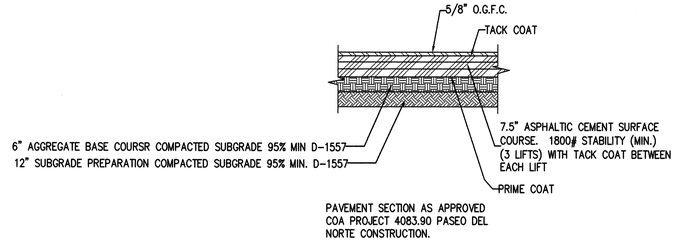

WYOMING BOULDVARD PROPOSED PAVEMENT SECTION

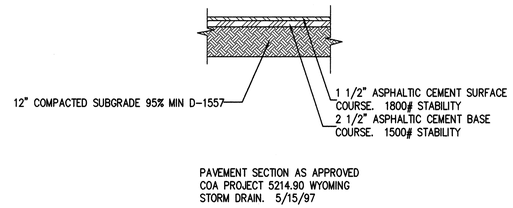

CORONA AVENUE PROPOSED PAVEMENT SECTION

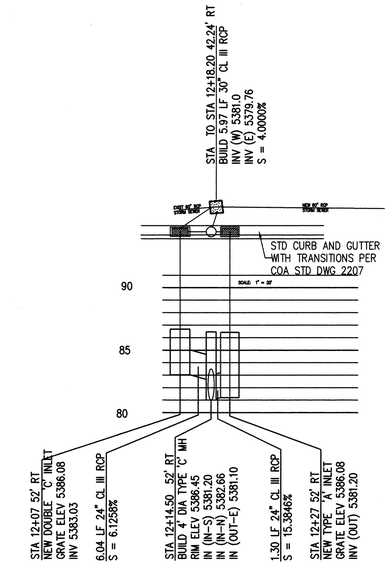

WYOMING BLVD. STORM INLET DETAIL

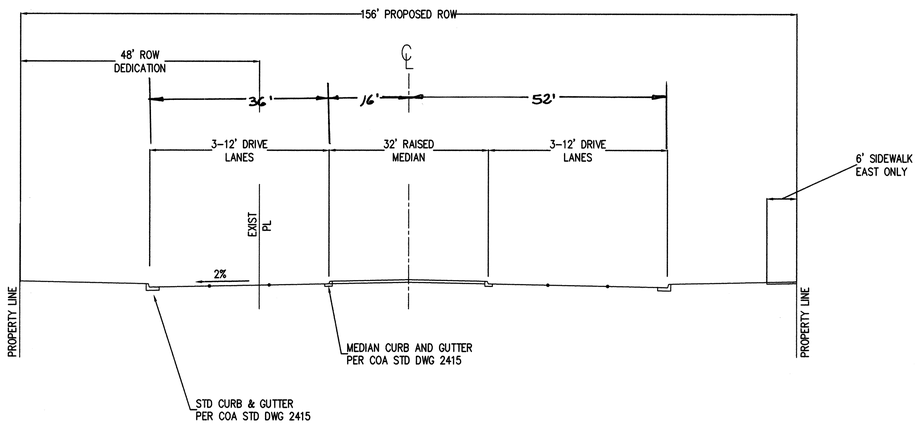

WYOMING BOULDVARD FUTURE TYPICAL SECTION

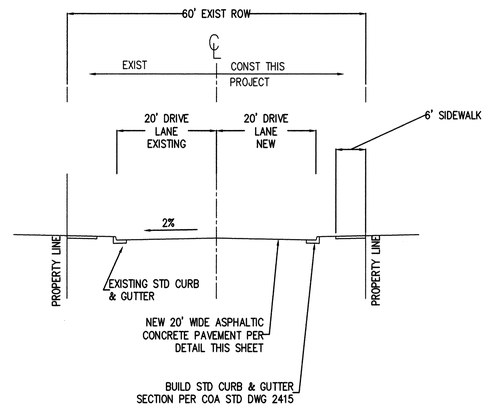

CORONA AVENUE PROPOSED TYPICAL SECTION

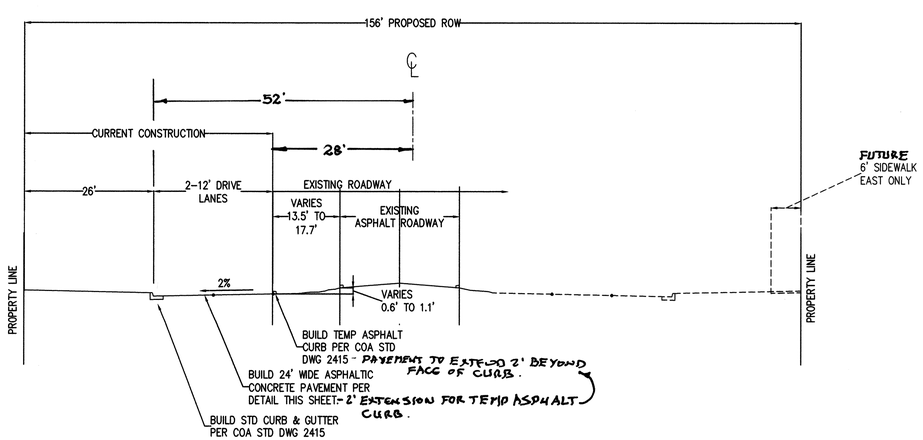

WYOMING BOULDVARD CURRENT CONST. SECTION

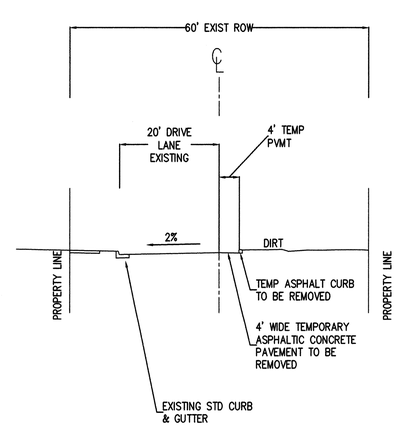

CORONA AVENUE EXISTING SECTION

FOR INFORMATION ONLY

LARRY READ & ASSOCIATES
Civil Engineers
12836 - B Lomas Blvd., N.E.
Albuquerque, New Mexico 87112
(505) 237-8421

CITY OF ALBUQUERQUE
PUBLIC WORKS DEPARTMENT
ENGINEERING DEVELOPMENT GROUP

TITLE: ALBUQUERQUE FIRE DEPT. STATION # 20
TYPICAL SECTIONS

Design Review Committee: APPROVED OCT 22 1999 DESIGN REVIEW COMMITTEE
City Engineer Approval: APPROVED OCT 22 1999 CITY ENGINEER
LAST DESIGN UPDATE | Mo./Day/Yr. | Mo./Day/Yr.

Project Phase	City Project No.	Zone Map No.	Sheet	Of
OFFSITE	6042.91	C-19	5	13

SURVEY INFORMATION
FIELD NOTES

NO.	BY	DATE

BENCH MARKS
City of Albuquerque bench Mark "HEAVEN", a standard USGS brass tablet stamped "HEAVEN 1969", set in top of a concrete post flush with the ground. Located at the entrance to the "GATE OF HEAVEN"CEMETERY 0.15 miles west of the intersection of Paseo del Norte N.E. and Wyoming Blvd. N.E. Station is on the south side of Paseo del Norte N.E.
ELEV.=5378.78 feet (M.S.L.D.)

AS BUILT INFORMATION

CONTRACTOR		
WORK STAKED BY		DATE
INSPECTORS FIELD ACCEPTANCE BY		DATE
VERIFICATION BY		DATE
DRAWINGS CORRECTED BY		DATE
MICRO-FILM INFORMATION		
RECORDED BY		DATE
NEW		

ENGINEER'S SEAL
LARRY D. READ NEW MEXICO (10998) REGISTERED PROFESSIONAL ENGINEER
6/26/99

NO.	DATE	REMARKS	BY
		REVISIONS	

DESIGN

DESIGNED		DATE
DRAWN BY		DATE
CHECKED BY		DATE

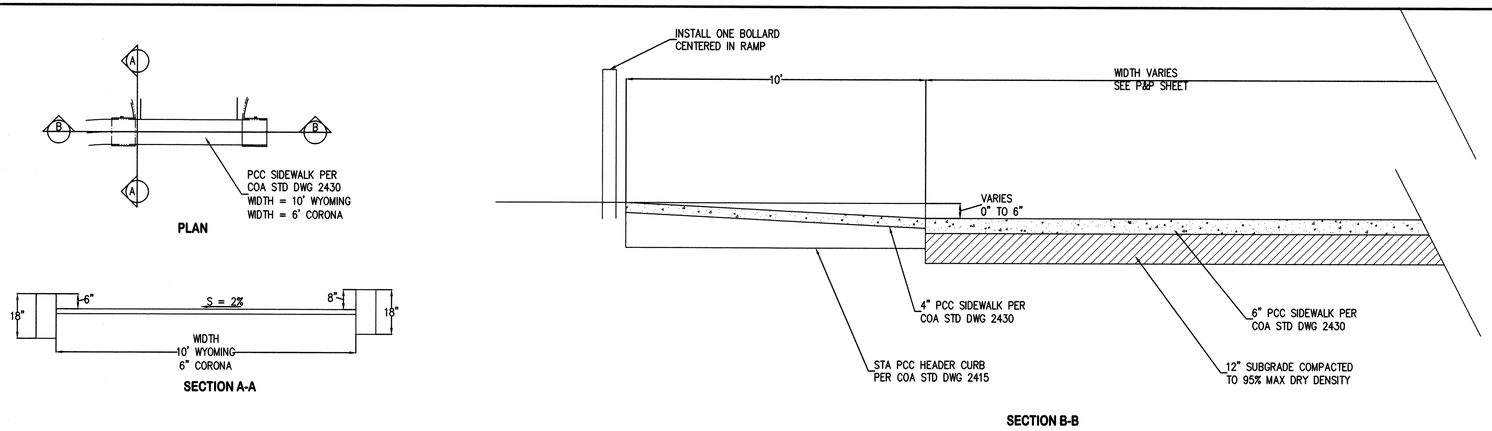

NOTE: REFERENCE COA STD DWG 2426 FOR ADDITIONAL DETAIL.

UNIDIRECTIONAL WHEELCHAIR RAMP DETAIL

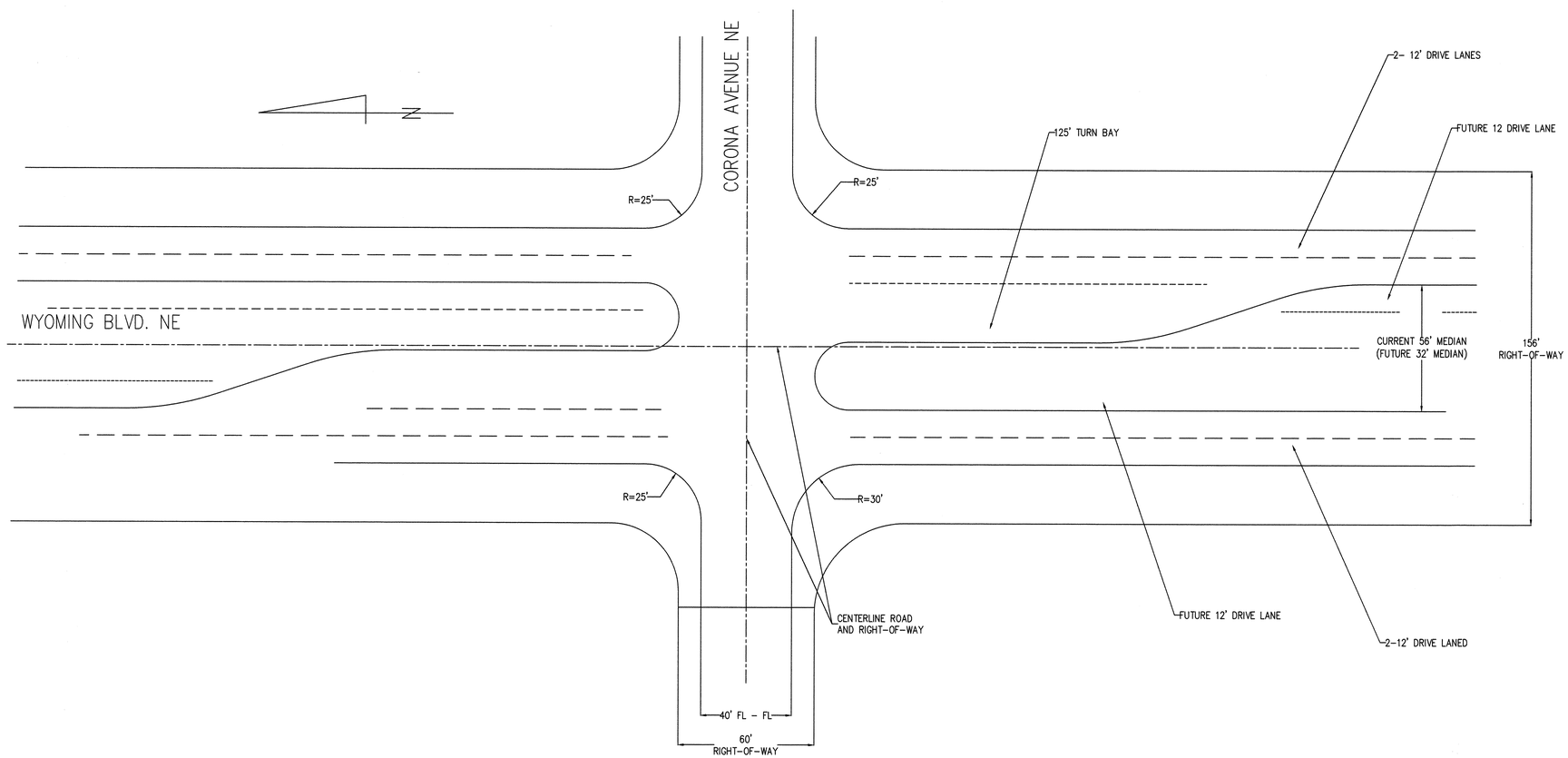

ULTIMATE INTERSECTION CONFIGURATION DETAIL WYOMING/CORONA AVENUE

FOR INFORMATION ONLY

FOR AS-BUILT INFORMATION ONLY

AS BUILT INFORMATION

CONTRACTOR

		DATE
WORK STAKED BY		
INSPECTORS ACCEPTANCE BY		DATE
FIELD VERIFICATION BY		DATE
DRAWINGS CORRECTED BY		DATE

MICRO-FILM INFORMATION

	DATE
RECORDED BY	
NO.	

BENCH MARKS

City of Albuquerque bench Mark "HEAVEN", a standard USGS brass tablet stamped "HEAVEN 1969", set in top of a concrete post flush with the ground. Located at the entrance to the "GATE OF HEAVEN"CEMETERY 0.15 miles west of the intersection of Paseo del Norte N.E. and Wyoming Blvd. N.E. Station is on the south side of Paseo del Norte N.E.
ELEV.=5378.78 feet (M.S.L.D.)

SURVEY INFORMATION

FIELD NOTES

NO.	BY	DATE

ENGINEER'S SEAL

LARRENCE O. READ
NEW MEXICO
(10998)
REGISTERED PROFESSIONAL ENGINEER
7/24/99

NO.	DATE	REMARKS	BY

REVISIONS

DESIGN

DESIGNED	DATE
DRAWN BY	DATE
CHECKED BY	DATE

LARRY READ & ASSOCIATES
Civil Engineers
12836 - B Lomas Blvd., N.E.
Albuquerque, New Mexico 87112
(505) 237-8421

CITY OF ALBUQUERQUE
PUBLIC WORKS DEPARTMENT
ENGINEERING DEVELOPMENT GROUP

TITLE: ALBUQUERQUE FIRE DEPT. STATION # 20
TYPICAL SECTIONS

Design Review Committee	City Engineer Approval	LAST DESIGN UPDATE	Mo./Day/Yr.	Mo./Day/Yr.
APPROVED OCT 22 1999 DESIGN REVIEW COMMITTEE	APPROVED OCT 22 1999 CITY ENGINEER			

Project Phase	City Project No.	Zone Map No.	Sheet
OFFSITE	6042.91	C-19	5a Of 13

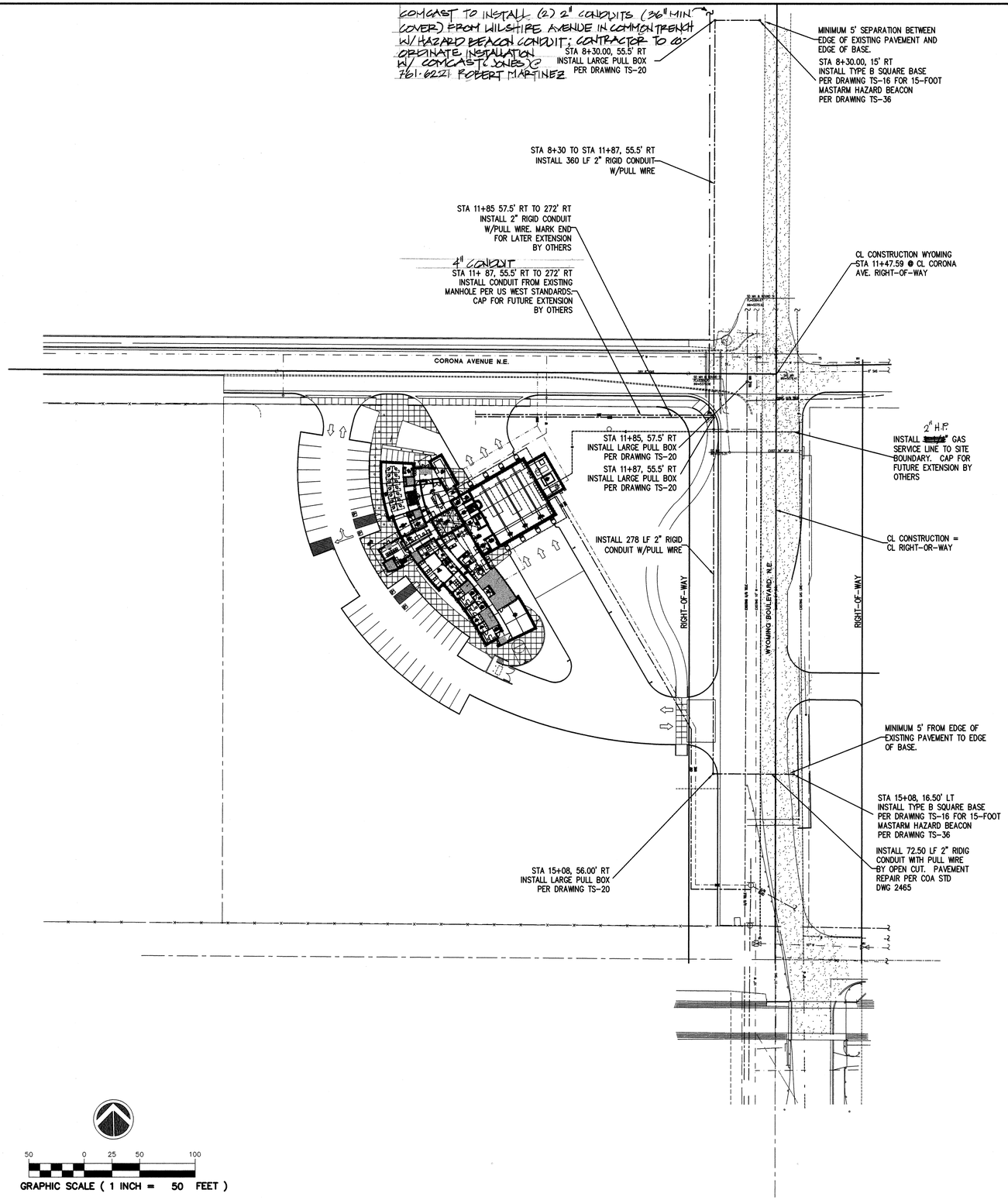

NOTES

1. CONTRACTOR SHALL SUPPLY TWO 15' MASTARM ASSEMBLIES WITH SIGNAL HEAD AND SIGNING AS DETAILED ON DRAWING T-36 TO A LOCATION DESIGNATED BY THE FIRE DEPARTMENT FOR LATER INSTALLATION. THE CONTRACTOR SHALL INSTALL UPON NOTIFICATION FROM ON-SITE GENERAL CONTRACTOR (6042.91 ON-SITE).

FOR INFORMATION ONLY

FOR INFORMATION ONLY

AS BUILT INFORMATION

CONTRACTOR
WORK STAKED BY — DATE
INSPECTED & ACCEPTANCE BY — DATE
FIELD VERIFICATION BY — DATE
DRAWINGS CORRECTED BY — DATE
MICRO-FILM INFORMATION
RECORDED BY — DATE
NO. — BY

BENCH MARKS

City of Albuquerque bench Mark "HEAVEN", a standard USGS brass tablet stamped "HEAVEN 1969", set in top of a concrete post flush with the ground. Located at the entrance to the "GATE OF HEAVEN" CEMETERY 0.15 miles west of the intersection of Paseo del Norte N.E. and Wyoming Blvd. N.E. Station is on the south side of Paseo del Norte N.E.
ELEV.=5378.78 feet (M.S.L.D.)

SURVEY INFORMATION

FIELD NOTES

NO.	BY	DATE

ENGINEER'S SEAL

LARRY D. READ — NEW MEXICO — 10998 — REGISTERED PROFESSIONAL ENGINEER
9/30/99

NO.	DATE	REMARKS	BY

REVISIONS

DESIGN

DESIGNED — DATE
DRAWN BY — DATE
CHECKED BY — DATE

LARRY READ & ASSOCIATES
Civil Engineers
12836 - B Lomas Blvd., N.E.
Albuquerque, New Mexico 87112
(505) 237-8421

CITY OF ALBUQUERQUE
PUBLIC WORKS DEPARTMENT
ENGINEERING DEVELOPMENT GROUP

TITLE: ALBUQUERQUE FIRE DEPT. STATION # 20
~~TRAFFIC~~ TELEPHONE, AND GAS EXTENSIONS

Design Review Committee: APPROVED OCT 22 1999 DESIGN REVIEW COMMITTEE

City Engineer Approval: APPROVED OCT 22 1999 CITY ENGINEER

LAST DESIGN UPDATE — Mo./Day/Yr. — Mo./Day/Yr.

Project Phase	City Project No.	Zone Map No.	Sheet	Of
OFFSITE	6042.91	C-19	6	13

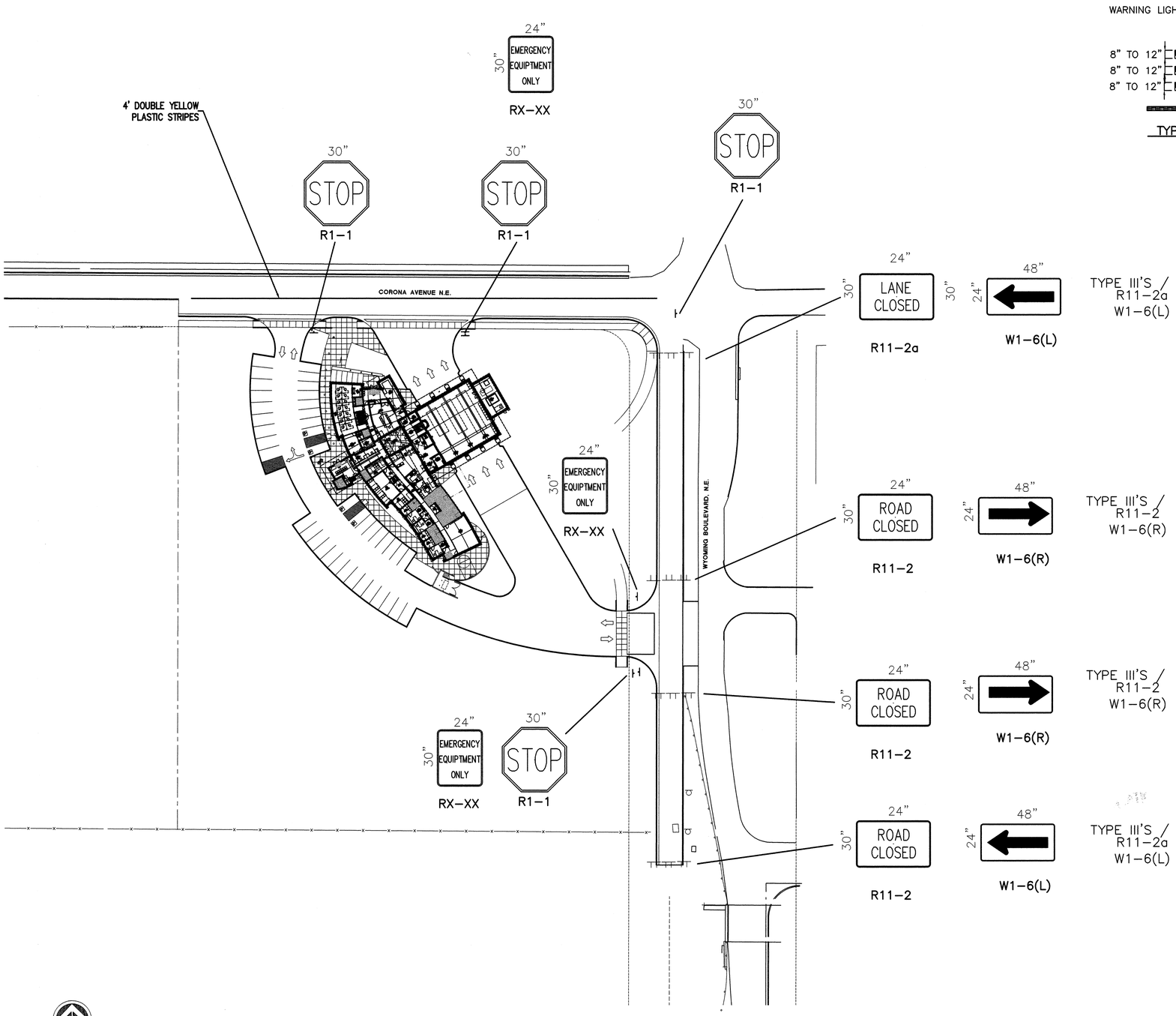

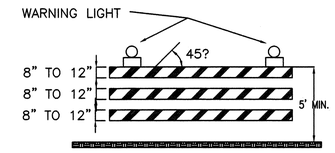

TYPE III BARRICADE

GRAPHIC SCALE (1 INCH = 50 FEET)

AS BUILT INFORMATION

CONTRACTOR

WORK STAKED BY		DATE
INSPECTOR'S ACCEPTANCE BY		DATE
FIELD VERIFICATION BY		DATE
DRAWINGS CORRECTED BY		DATE

MICRO-FILM INFORMATION

RECORDED BY DATE

NO.

BENCH MARKS

City of Albuquerque bench Mark "HEAVEN", a standard USGS brass tablet stamped "HEAVEN 1969", set in top of a concrete post flush with the ground. Located at the entrance to the "GATE OF HEAVEN" CEMETERY 0.15 miles west of the intersection of Paseo del Norte N.E. and Wyoming Blvd. N.E. Station is on the south side of Paseo del Norte N.E.
ELEV.=5378.78 feet (M.S.L.D.)

SURVEY INFORMATION

FIELD NOTES

NO.	BY	DATE

ENGINEER'S SEAL

LAWRENCE D. READ NEW MEXICO 10998 REGISTERED PROFESSIONAL ENGINEER 9/30/99

NO.	DATE	REMARKS	BY

REVISIONS

DESIGN

DESIGNED DATE
DRAWN BY DATE
CHECKED BY DATE

FOR INFORMATION ONLY

LARRY READ & ASSOCIATES
Civil Engineers
12836 - B Lomas Blvd., N.E.
Albuquerque, New Mexico 87112
(505) 237-8421

CITY OF ALBUQUERQUE
PUBLIC WORKS DEPARTMENT
ENGINEERING DEVELOPMENT GROUP

TITLE: ALBUQUERQUE FIRE DEPT. STATION # 20
PERMANENT TRAFFIC CONTROL PLAN

Design Review Committee: APPROVED OCT 22 1999 DESIGN REVIEW COMMITTEE

City Engineer Approval: APPROVED OCT 22 1999 CITY ENGINEER

LAST DESIGN UPDATE | Mo./Day/Yr. | Mo./Day/Yr.

Project Phase	City Project No.	Zone Map No.	Sheet
OFFSITE	6042.91	C-19	7 Of 13

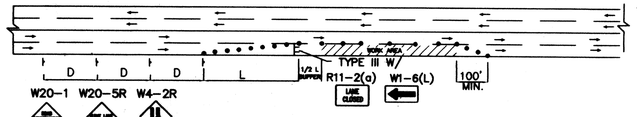

TYPICAL RIGHT LANE CLOSURE

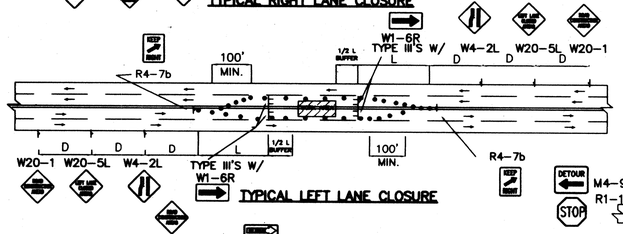

TYPICAL LEFT LANE CLOSURE

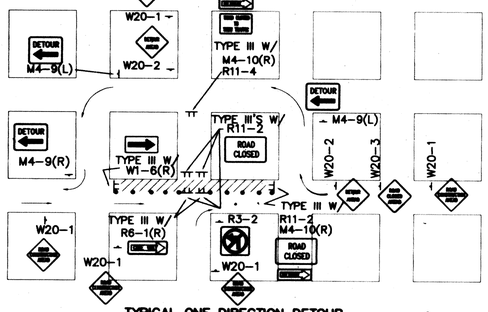

TYPICAL ONE DIRECTION DETOUR

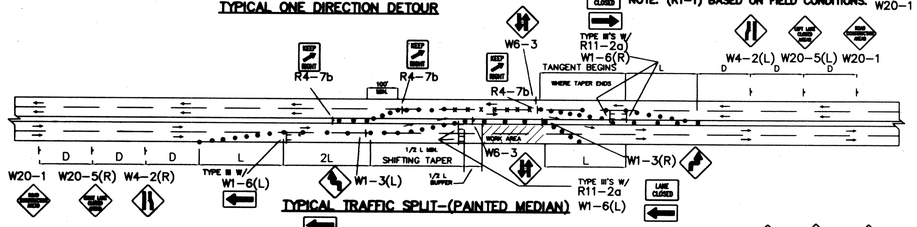

TYPICAL TRAFFIC SPLIT-(PAINTED MEDIAN)

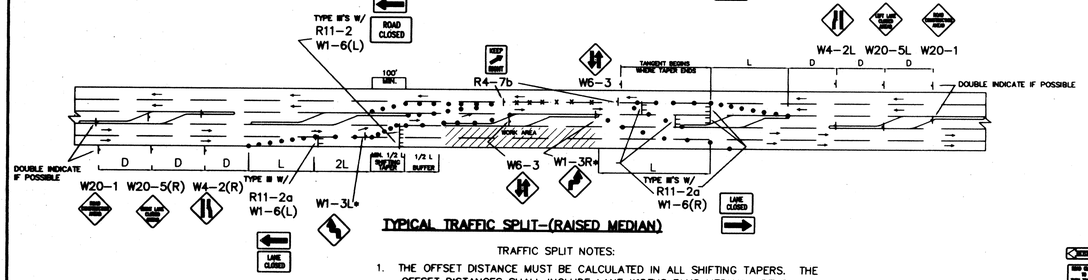

TYPICAL TRAFFIC SPLIT-(RAISED MEDIAN)

TRAFFIC SPLIT NOTES:

1. THE OFFSET DISTANCE MUST BE CALCULATED IN ALL SHIFTING TAPERS. THE OFFSET DISTANCES SHALL INCLUDE LANE WIDTHS PLUS MEDIAN WIDTHS.
2. 1/2 L IS MINIMUM DISTANCE FOR SHIFTING TAPERS.
3. REVERSE CURVES MAY BE IMPLEMENTED. ALL CURVE DATA SHALL BE CALCULATED.
4. MEDIAN REMOVAL SHALL BE REQUIRED IF 1/2 L OR REVERSE CURVE IS NOT SUFFICIENT. MEDIAN REMOVAL SHALL TAKE PLACE BEFORE SPLITS.
5. REDUCED SPEED MAY BE CONSIDERED.
6. * USE W1-3 FOR 30 MPH OR LESS, W1-4 FOR SPEED 35 MPH OR GREATER.

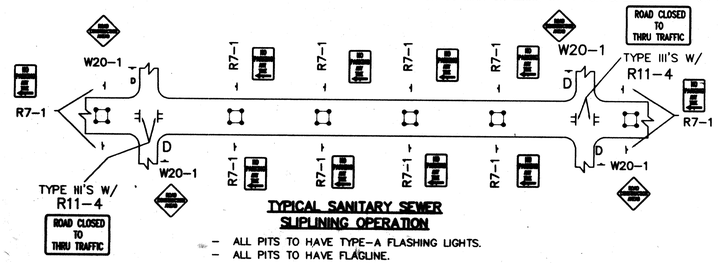

TYPICAL SANITARY SEWER SLIPLINING OPERATION

- ALL PITS TO HAVE TYPE-A FLASHING LIGHTS.
- ALL PITS TO HAVE FLAGLINE.

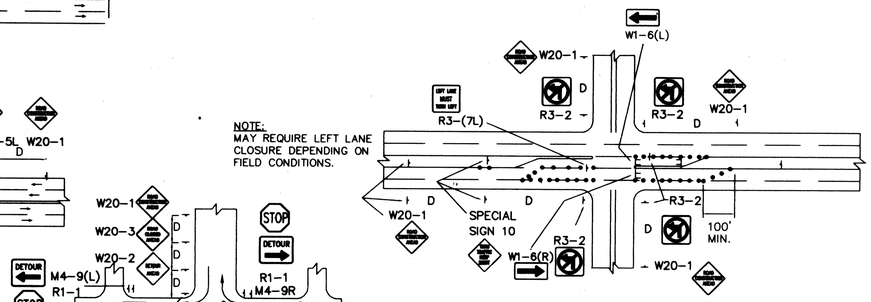

TYPICAL LANE CLOSURE AT INTERSECTION

NOTE: DEPENDING ON WORK ZONE LOCATION

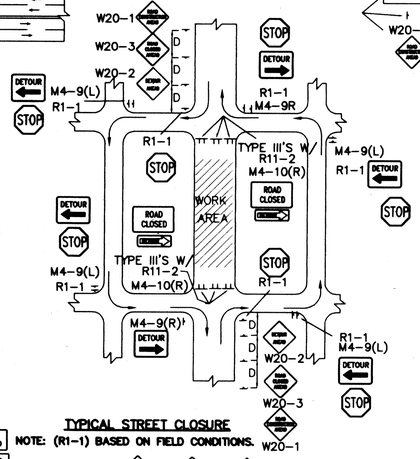

TYPICAL STREET CLOSURE

NOTE: (R1-1) BASED ON FIELD CONDITIONS.

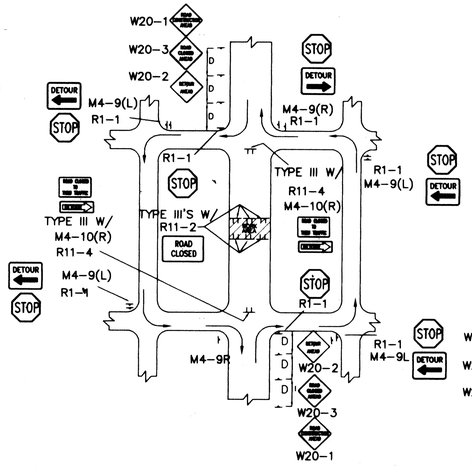

TYPICAL MID-BLOCK CLOSURE

NOTE: (R1-1) BASED ON FIELD CONDITIONS.

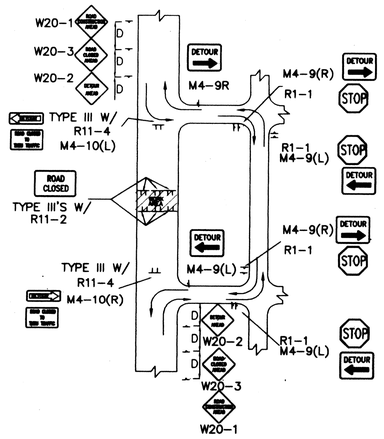

TYPICAL STREET CLOSURE

NOTE: (R1-1) BASED ON FIELD CONDITIONS.

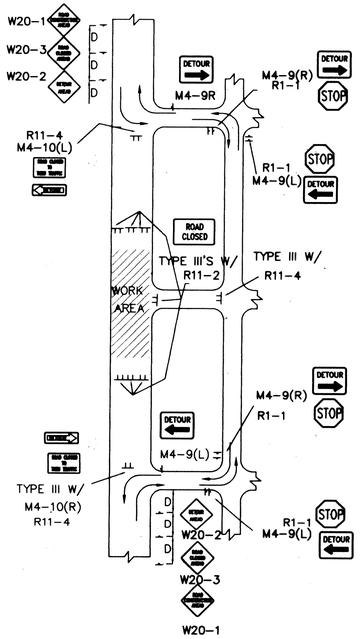

TYPICAL STREET CLOSURE

NOTE: (R1-1) BASED ON FIELD CONDITIONS.

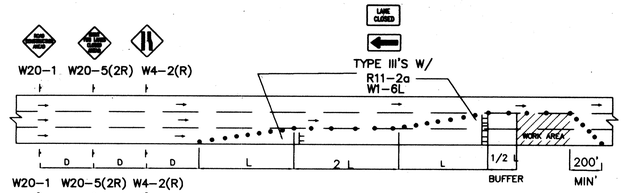

TYPICAL DOUBLE RIGHT LANE CLOSURE

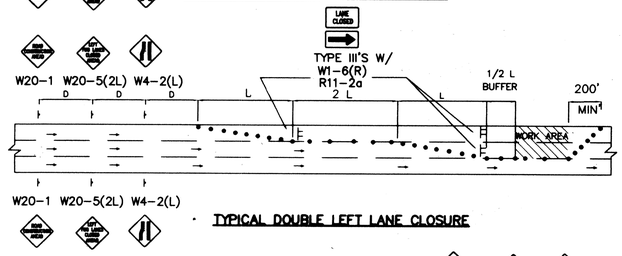

TYPICAL DOUBLE LEFT LANE CLOSURE

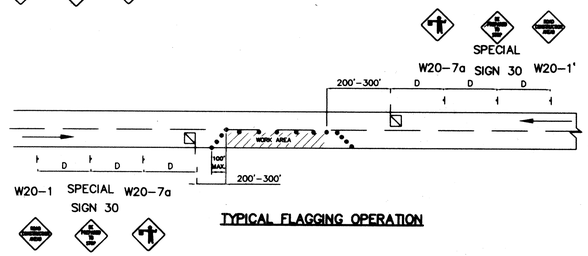

TYPICAL FLAGGING OPERATION

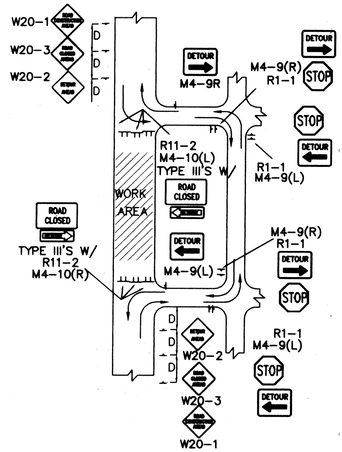

TYPICAL STREET CLOSURE

NOTE: (R1-1) BASED ON FIELD CONDITIONS.

NOT INFORMATION ONLY

GENERAL NOTE:

ALL CONSTRUCTION WARNING SIGNS SHALL HAVE A BLACK LEGEND ON A ORANGE BACKGROUND.

ALL ADVANCE WARNING SIGNS SHALL BE A MINIMUM OF 36" THIRTY SIX INCHES BY 36" THIRTY SIX INCHES IN SIZE AND SHALL HAVE ONE WARNING LIGHT. △1

AS BUILT INFORMATION

CONTRACTOR DATE
WORK STAKED BY DATE
INSPECTOR'S ACCEPTANCE BY DATE
FIELD VERIFICATION BY DATE
DRAWINGS CORRECTED BY DATE

MICRO-FILM INFORMATION

RECORDED BY DATE
NO.

BENCH MARKS

SURVEY INFORMATION

NO.	FIELD NOTES BY	DATE

ENGINEER'S SEAL

MILTON B. DOUGLAS JR. NEW MEXICO 5985 REGISTERED PROFESSIONAL ENGINEER

NO.	DATE	REMARKS	BY
△1	9/24/97	REVISED GENERAL NOTE	J.D.L.

REVISIONS

DESIGN

DESIGNED BY C.O.A. STANDARDS DATE
DRAWN BY DATE
CHECKED BY DATE

CITY OF ALBUQUERQUE
PUBLIC WORKS DEPARTMENT
ENGINEERING DEVELOPMENT GROUP

TITLE: **TYPICAL TRAFFIC CONTROL & SIGNING EXAMPLES (REF. M.U.T.C.D.)**

DESIGN REVIEW COMMITEE	CITY ENGINEER APPROVAL	LAST UPDATE	MO./DAY/YR.	MO./DAY/YR.
COA	STP			

OFFSITE PHASE

PROJECT NO. 6042.91 | MAP NO. C-19 | SHEET 8 OF 13

CTCSTN02.DWG

CONSTRUCTION TRAFFIC CONTROL GENERAL NOTES

1. CONTRACTOR MUST OBTAIN FROM CONSTRUCTION COORDINATION AN EXCAVATION/BARRICADING PERMIT BEFORE ENGAGING IN ANY CONSTRUCTION, MAINTENANCE OR REPAIR WORK IN ANY OF THE CITY OF ALBUQUERQUE'S RIGHTS-OF-WAY. EMERGENCY WORK THAT WOULD PRESERVE LIFE OR PROPERTY IS EXCLUDED WITH THE UNDERSTANDING, THAT A PERMIT SHALL BE OBTAINED WITHIN 24 TO 48 HOURS.

2. CONTRACTOR SHALL AT THE TIME OF PERMIT REQUEST, SUBMIT FOR APPROVAL BY CONSTRUCTION COORDINATION, A TRAFFIC CONTROL PLAN DETAILING ALL EXISTING TOPOGRAPHY SUCH AS LANE WIDTHS, DRIVEWAYS, AND BUSINESS/RESIDENTIAL ACCESSES. THE TRAFFIC CONTROL PLAN SHALL INCLUDE ALL PHASES OF WORK AND SCHEDULES INVOLVED IN THE CONSTRUCTION PROJECT. ANY SEPARATE PHASES OF A CONSTRUCTION PROJECT SHALL BE GIVEN AN INDIVIDUAL PERMIT EACH. BLANKET PERMITS WILL NOT BE ISSUED.

3. THESE TYPICAL TRAFFIC CONTROL PLANS DO NOT REFLECT THE EXISTING TOPOGRAPHY SUCH AS DRIVEWAYS, LANE WIDTHS, AND BUSINESS/RESIDENTIAL ACCESSES. EVERY LOCATION THAT REQUIRES CONSTRUCTION TRAFFIC CONTROL SHALL HAVE A DETAILED TRAFFIC CONTROL PLAN SHOWING ALL EXISTING TOPOGRAPHY.

4. CONSTRUCTION SHALL NOT BEGIN UNLESS A TRAFFIC CONTROL PLAN HAS BEEN APPROVED AND VERIFIED BY CONSTRUCTION COORDINATION.

5. CONSTRUCTION COORDINATION SHALL BE NOTIFIED 48 HOURS PRIOR TO ANY TRAFFIC CONTROL CHANGES NEEDED BY CONTRACTOR, THAT WERE NOT PREVIOUSLY APPROVED. THESE TRAFFIC CONTROL CHANGES SHALL BE REQUESTED IN WRITING ACCOMPANIED WITH A TRAFFIC CONTROL PLAN REFLECTING SUCH CHANGES.

6. ALL CONSTRUCTION TRAFFIC CONTROL DEVICES SHALL COMPLY TO THE MANUAL ON UNIFORM TRAFFIC CONTROL DEVICES (MUTCD), LATEST EDITION. IT IS THE RESPONSIBILITY OF THE CONTRACTOR TO INSTALL, SERVICE AND MAINTAIN ALL TRAFFIC CONTROL DEVICES. TRAFFIC CONTROL DEVICES SHALL NOT BE REMOVED OR ALTERED IN ANY WAY WITHOUT THE APPROVAL OF CONSTRUCTION COORDINATION, PER SECTION 6A-4 OF THE MUTCD, LATEST EDITION.

7. THE CONSTRUCTION TRAFFIC CONTROL INITIAL SET-UP SHALL BE BY AN AMERICAN TRAFFIC SAFETY SERVICES ASSOCIATION (ATSSA) CERTIFIED WORKSITE TRAFFIC SUPERVISOR. THE MAINTENANCE AND SERVICING SHALL ALSO BE DONE BY AN ATSSA CERTIFIED WORKSITE TRAFFIC SUPERVISOR OR EQUIVALENT.

8. CONTRACTOR IS RESPONSIBLE TO MAINTAIN AND SERVICE ALL TRAFFIC CONTROL DEVICES 24 HOURS A DAY, 7 DAYS A WEEK THROUGHOUT LENGTH OF PROJECT. CONTRACTOR IS RESPONSIBLE THAT ALL TRAFFIC CONTROL DEVICES COMPLY WITH THE MUTCD, LATEST EDITION.

9. ALL ADVANCE WARNING SIGNS SHALL BE DOUBLE INDICATED WHENEVER THERE ARE MULTI-LANE TRAFFIC IN ANY ONE GIVEN DIRECTION AND THERE IS SUFFICIENT MEDIAN SPACE.

10. ALL BARRICADES IN ALL TAPERS AND TANGENTS SHALL BE PLACED APART, A DISTANCE MEASURED IN FEET, EQUAL TO THAT OF THE POSTED SPEED LIMIT. NO EXCEPTIONS UNLESS APPROVED BY CONSTRUCTION COORDINATION PER MUTCD SECTION 6A-4.

11. ALL WORK IN ARTERIAL ROADWAYS SHALL BE ON A CONTINUOUS 24HOUR PER DAY BASIS UNTIL COMPLETED. 1

12. CONTRACTOR IS RESPONSIBLE TO PROVIDE CONSTRUCTION COORDINATION, A WEEKLY LOG OF DAILY INSPECTIONS OF BARRICADE AND MAINTENANCE SCHEDULES ON PROJECTS THAT ARE OVER ONE WEEK DURATION.

13. EQUIPMENT OR MATERIALS SHALL NOT BE STORED WITHIN 15 FEET OF A TRAVELLED TRAFFIC LANE DURING NON-WORKING HOURS WITHOUT THE APPROVAL OF CONSTRUCTION COORDINATION.

14. CONTRACTOR SHALL PROVIDE AND MAINTAIN A SAFE AND ADEQUATE MEANS OF CHANNELIZING PEDESTRIAN TRAFFIC AROUND AND THROUGH THE CONSTRUCTION AREA.

15. CONTRACTOR IS RESPONSIBLE FOR OBLITERATION OF ANY CONFLICTING STRIPING AND RESPONSIBLE FOR ALL TEMPORARY STRIPING.

16. CONTRACTOR SHALL MAINTAIN ACCESS TO ALL FACILITIES, BUSINESSES AND/OR RESIDENTS AT ALL TIMES.

17. CONTRACTOR SHALL PROVIDE ACCESS SIGNS FOR BUSINESSES LOCATED WITHIN THE CONSTRUCTION AREA UNDER THE SUPERVISION OF CONSTRUCTION COORDINATION. EACH ACCESS SIGN SHALL HAVE 5 INCH, WHITE OPAQUE LETTERING ON BLUE REFLECTORIZED BACKGROUND. ACCESS SIGNS SHALL BE CONSIDERED INCIDENTAL TO THE BID AND NOT PART OF THE CONTRACT UNLESS OTHERWISE STATED. NO MORE THAN 3 BUSINESSES SHALL BE LISTED ON A ACCESS SIGN. SHOPPING CENTERS AND MALLS SHALL BE LISTED AS SUCH.

18. ALL ADVANCE WARNING SIGNS SHALL MEET THE MINIMUM REFLECTIVE INTENSITY REQUIREMENTS SET FORTH BY THE CITY OF ALBUQUERQUE. CONSTRUCTION COORDINATION SHALL DETERMINE ALL REQUIREMENTS AND APPROVE OR DISAPPROVE ANY ADVANCE WARNING SIGN PER SECTION 6A-4 OF THE MUTCD, LATEST EDITION.

19. 2 48 HOURS PRIOR TO OCCUPYING OR CLOSING OF A RIGHT-OF-WAY, CONTRACTOR SHALL NOTIFY: POLICE, FIRE DEPARTMENT, SCHOOLS, HOSPITALS, TRANSIT AUTHORITY, BUSINESSES AND/OR RESIDENTS THAT WILL BE AFFECTED BY THE CONSTRUCTION.

20. ANY FIELD ADJUSTMENTS SHALL BE APPROVED BY CONSTRUCTION COORDINATION.

21. EXCAVATIONS SHALL BE PLATED, TEMPORARILY PATCHED OR RESURFACED PRIOR TO OPENING OF TRAFFIC. A MINIMUM OF 11 FEET SHALL BE PROVIDED FOR TRAFFIC IN ANY GIVEN DIRECTION. CONTRACTOR IS RESPONSIBLE FOR ANY WORK INVOLVED IN SATISFYING THESE REQUIREMENTS.

22. CONTRACTOR SHALL AT ALL TIMES COMPLY WITH THE FOLLOWING:
    1. STANDARDS AND REQUIREMENTS SET FORTH IN THE MANUAL ON UNIFORM TRAFFIC CONTROL DEVICES, LATEST EDITION.
    2. THE CITY OF ALBUQUERQUE TRAFFIC CODE, LATEST EDITION.
    3. SECTION 19 OF THE CITY OF ALBUQUERQUE'S STANDARD SPECIFICATIONS FOR PUBLIC WORK CONSTRUCTION, AS WELL AS OTHER SECTIONS.

23. FAILURE TO COMPLY WITH ANY OF THE ABOVE MENTIONED, WILL BE ADEQUATE CAUSE TO CEASE ALL WORK ON ANY CONSTRUCTION PROJECT. WORK WILL NOT RESUME UNTIL ALL REQUIREMENTS ARE ADDRESSED AND APPROVED BY CONSTRUCTION COORDINATION.

24. ALL TRAFFIC CONTROL DEVICES SHALL BE KEPT IN NEW-CLEAN CONDITION. WASHING OF EQUIPMENT IS INCIDENTAL TO IT'S PLACEMENT AND MAINTENANCE.

25. TRAFFIC CONTROL STANDARDS APPLY ONLY WHERE THE CONSTRUCTION TRAFFIC CONTROL PLANS ARE NOT SPECIFIC.

26. ADVANCE WARNING SIGNS SHALL BE 36"x36" MIN. WITH SUPER ENGINEERING GRADE SHEETING OR BETTER. MOUNTING HEIGTH AT TOP OF SIGN SHALL BE THE SAME AS FOR A 48" SIGN AS INDICATED IN THE M.U.T.C.D. 3

27. CONTRACTOR SHALL MAINTAIN A GRAFFITI-FREE WORKSITE. ALL GRAFFITI SHALL BE PROMPTLY REMOVED FROM ALL EQUIPMENT, BOTH PERMANENT AND TEMPORARY. 4 SPECIAL PROJECT TRAFFIC CONTROL NOTES

28. ALL WORK EFFECTING TRAVEL LANES ON WYOMING BLVD. SHALL BE PERFORMED ON A CONTINUOUS 24-HOUR BASIS UNTIL COMPLETED.

29. THE CONTRACTOR SHALL PERFORM AND COMPLETE AS MUCH WORK AS POSSIBLE BEHIND THE CURB PRIOR TO ENTERING ROADWAYS. CONTRACTOR SHALL BE LIMITED TO A TOTAL OF FIVE DAYS FOR WORK EFFECTING WYOMING BLVD.

30. No Closures of Wyoming will be allowed between 5am and 7pm Weekdays (Monday - Friday). Closures will only be allowed between 7pm and 5am Weekdays (Monday - Friday) and All day Saturday and Sunday.

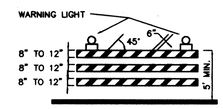

TYPE III BARRICADE

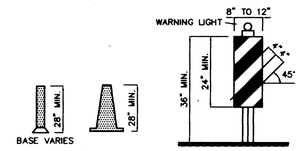

CONES — VERTICAL PANEL — HIGH LEVEL WARNING DEVICE

LEGEND

- WORK AREA
- BARRICADE – TYPE I, TYPE II, OR BARREL
- BARRICADE – TYPE III
- X VERTICAL PANEL
- WARNING SIGN
- D DISTANCE BETWEEN SIGNS – A DISTANCE MEASURED IN FEET EQUAL TO A VALUE OF TEN TIMES THE SPEED LIMIT OF THE STREET
- FLAGMAN POSITION
- S SPACING BETWEEN BARRICADES– A DISTANCE MEASURED IN FEET EQUAL TO THE SPEED LIMIT OF THE STREET
- L TAPER LENGTH – SEE CHART BELOW

THE TANGENT LENGTH IS EQUAL TO THE TAPER LENGTH FOR A GIVEN STREET.

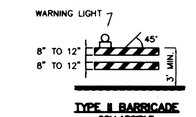

TYPE II BARRICADE
COLLAPSIBLE

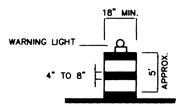

BARREL

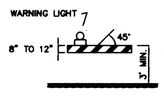

TYPE I BARRICADE
COLLAPSIBLE

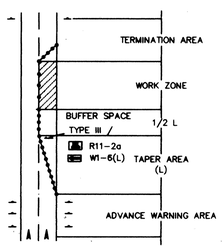

TRAFFIC CONTROL ELEMENTS

TAPER REQUIREMENTS

SPEED LIMIT (MPH)	TAPER LENGTH (L) (FEET)			MINIMUM NUMBER OF DEVICES FOR TAPER	MAXIMUM DEVICE SPACING IN FEET	
	10' LANE	11' LANE	12' LANE		ALONG TAPER	AFTER TAPER
20	70	75	80	5	20	20
25	105	115	125	6	25	25
30	150	165	180	7	30	30
35	205	225	245	8	35	35
40	270	295	320	9	40	40
45	450	495	540	13	45	45
50	500	550	600	13	50	50
55	550	605	660	13	55	55

RECOMMENDED SIGN SPACING(D) FOR ADVANCE WARNING SIGN SERIES

SPEED MILES PER HOUR	MINIMUM DISTANCE IN FEET BETWEEN SIGNS	FROM LAST SIGN TO TAPER
0-20	10 X SPEED LIMIT	10 X SPEED LIMIT
25-30	10 X SPEED LIMIT	10 X SPEED LIMIT
30-35	10 X SPEED LIMIT	10 X SPEED LIMIT
40-45	10 X SPEED LIMIT	10 X SPEED LIMIT
50-60	10 X SPEED LIMIT	10 X SPEED LIMIT

TAPER CRITERIA

TYPE OF TAPER	TAPER LENGTH
UPSTREAM TAPER:	
MERGING TAPER	L MINIMUM
SHIFTING TAPER	1/2 L MINIMUM
SHOULDER TAPER	1/2 L MINIMUM
TWO-WAY TRAFFIC TAPER	100 FEET MAXIMUM
DOWNSTREAM TAPERS	100 FEET PER LANE

TAPER LENGTH COMPUTATION

SPEED LIMIT	
40 MPH OR LESS	$L = \frac{WS^2}{60}$
45 MPH OR GREATER	$L = W \times S$

L = TAPER LENGTH
W = WIDTH OF OFFSET IN FEET
S = POSTED SPEED OR OFF-PEAK 85-PERCENTILE SPEED IN MPH

SIGN FACE DETAILS

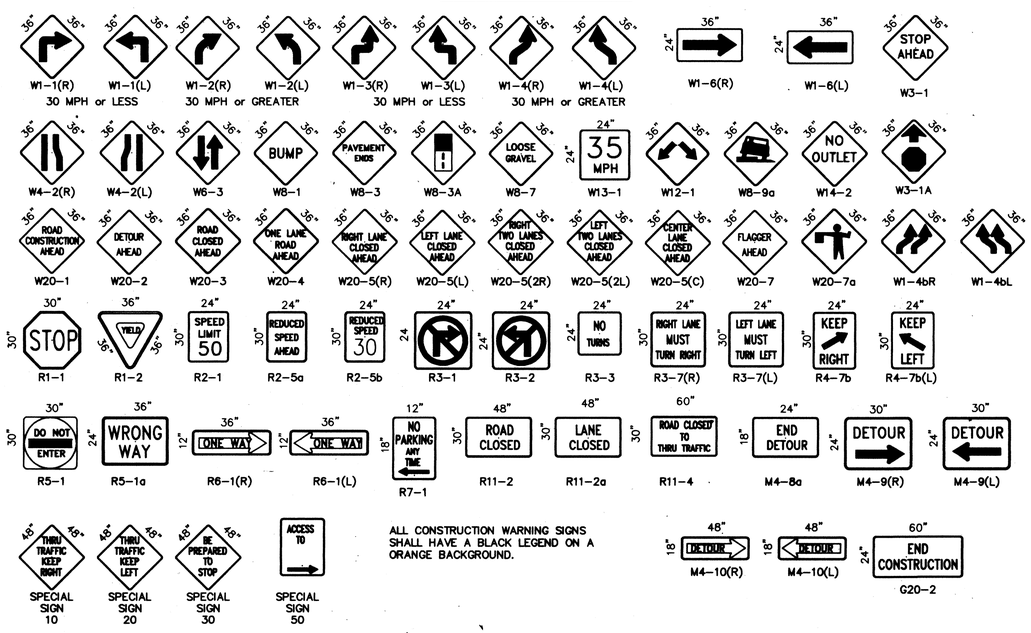

ALL CONSTRUCTION WARNING SIGNS SHALL HAVE A BLACK LEGEND ON A ORANGE BACKGROUND.

FOR INFORMATION ONLY

AS BUILT INFORMATION: CONTRACTOR / WORK STAKED BY / INSPECTOR ACCEPTANCE BY / FIELD VERIFICATION BY / DRAWINGS CORRECTED BY — DATE; MICRO-FILM INFORMATION: RECORDED BY / DATE / NO.

BENCH MARKS

SURVEY INFORMATION: FIELD NOTES — NO. / BY / DATE

ENGINEER'S SEAL

NO.	DATE	REMARKS	BY
4	9/25/91	ADD NOTE NO. 27	J.D.L.
3	9/24/97	REVISED NOTE NO. 26	J.D.L.
2	9/24/97	REVISED NOTE NO. 19	J.D.L.
1	9/24/97	REVISED NOTE NO. 11	J.D.L.

REVISIONS — DESIGN

DESIGNED BY — DATE
DRAWN BY C.O.A. STANDARDS — DATE
CHECKED BY — DATE

CITY OF ALBUQUERQUE
PUBLIC WORKS DEPARTMENT
ENGINEERING DEVELOPMENT GROUP

TITLE: **SIGNING AND CONSTRUCTION TRAFFIC CONTROL STANDARDS**

DESIGN REVIEW COMMITEE	CITY ENGINEER APPROVAL	LAST UPDATE	MO./DAY/YR.	MO./DAY/YR.
COA	STD			

OFFSITE PHASE | PROJECT NO. 6042.91 | MAP NO. C-19 | SHEET 9 OF 13

CTCSTN01.DWG

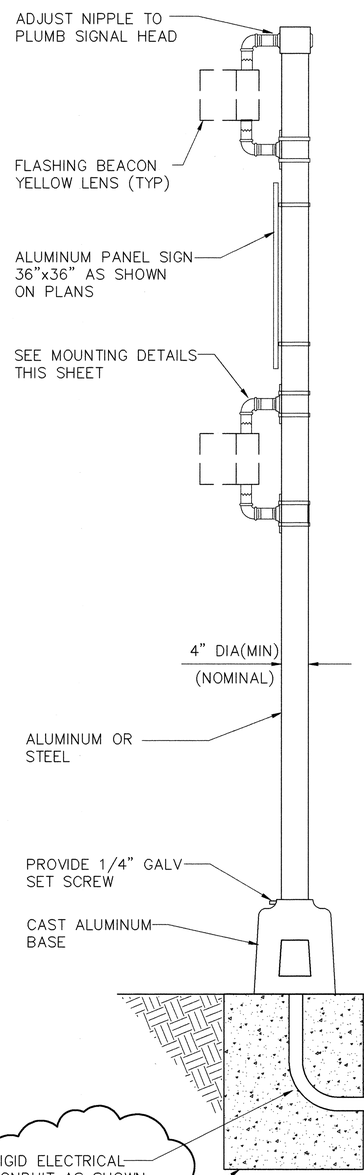

SIDE VIEW

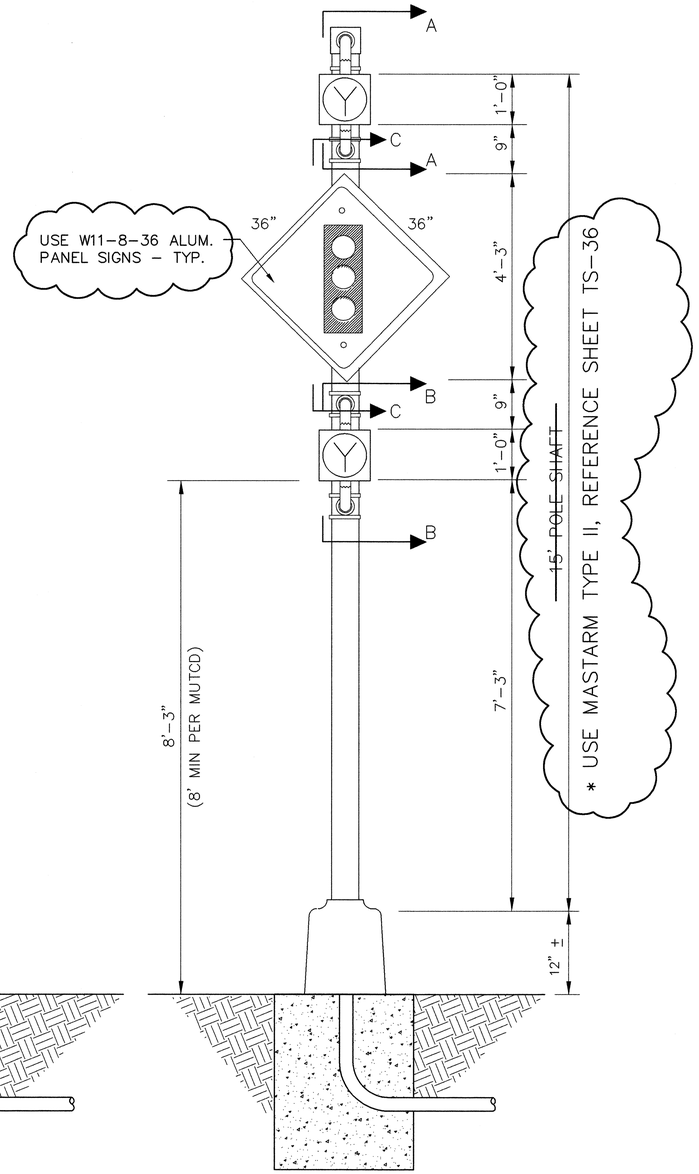

FRONT VIEW

RIGID ELECTRICAL CONDUIT AS SHOWN ON PLANS
SEE PEDESTAL FOUNDATION DETAIL
SEE SHEET TS-16

HAZARD IDENTIFICATION BEACON DETAIL

* USE MASTARM TYPE II, REFERENCE SHEET TS-36

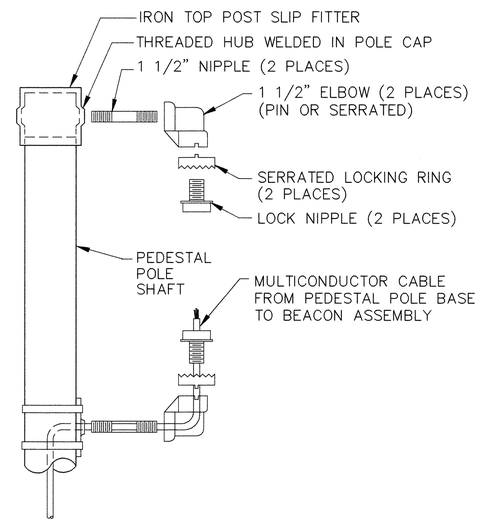

SECTION A-A

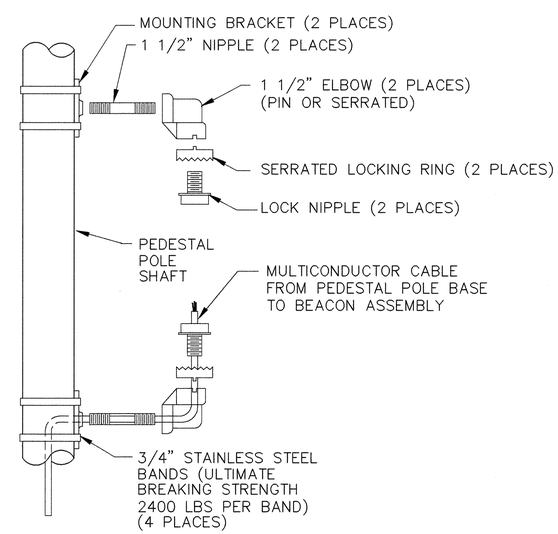

SECTION B-B

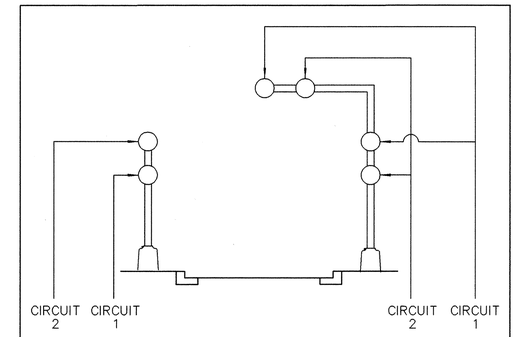

TYPICAL WIRING DIAGRAM FOR DUAL-CIRCUIT FLASHER OPERATION

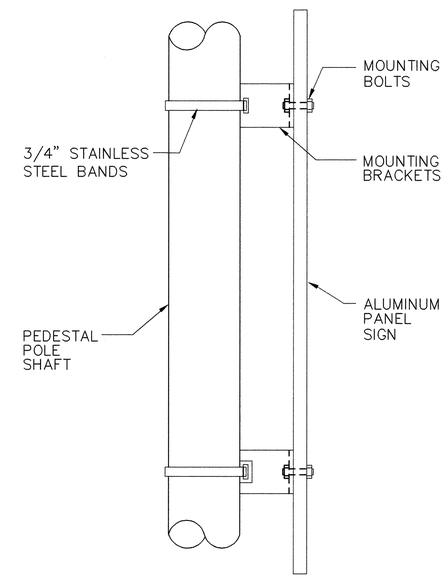

SIGN MOUNT DETAIL

SECTION C-C

FOR INFORMATION ONLY

COLORS

LEGEND: BLACK(NON-REFLECTIVE)
TOP PANEL: YELLOW
BOTTOM PANEL: WHITE
OUTSIDE BORDER: WHITE
INSIDE BORDER: BLACK

NOTES:

1. EACH HAZARD IDENTIFICATION BEACON WILL BE MEASURED AND PAID FOR UNDER THE FOLLOWING ITEMS:

ITEM ~~0422.004~~ – TRAFFIC SIGNAL PEDESTAL ~~POLE 15'~~ (1 EACH BEACON) REFERENCE SHEET TS-36

ITEM ~~0423.001~~ – TRAFFIC SIGNAL FOUNDATION FOR PEDESTAL ~~POLE~~ (1 EACH BEACON) REFERENCE SHEET TS-16

ITEM 0427.001 – 1 SECTION TRAFFIC SIGNAL ASSEMBLY ~~(2 EACH BEACON)~~ (4 EACH BEACON)

ITEM 0450.001 – ALUMINUM PANEL SIGNS ~~(1 EACH BEACON)~~ (2 EACH BEACON)

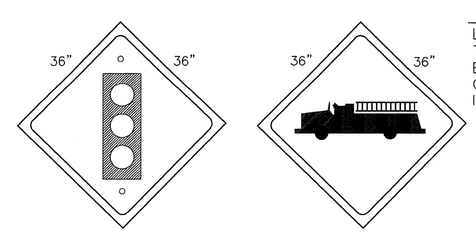

W3-3-36 W11-8-36

TYPICAL SIGN FACE DETAIL FOR HAZARD IDENTIFICATION BEACON

AS-BUILT INFORMATION
CONTRACTOR: DATE
WORK STAKED BY: DATE
INSPECTOR'S ACCEPTANCE BY: DATE
FIELD VERIFICATION BY: DATE
DRAWINGS CORRECTED BY: DATE
MICRO-FILM INFORMATION
RECORDED BY DATE
NO.

BENCH MARKS

SURVEY INFORMATION
FIELD NOTES

NO.	BY	DATE

ENGINEER'S SEAL

NO.	DATE	REMARKS	BY
		REVISIONS	
		DESIGN	

DESIGNED BY COA DATE 8-97
DRAWN BY COA DATE 8-97
CHECKED BY COA DATE 8-97

CITY OF ALBUQUERQUE
PUBLIC WORKS DEPARTMENT
ENGINEERING DEVELOPMENT GROUP

TITLE: TRAFFIC SIGNAL
HAZARD IDENTIFICATION BEACON DETAILS

DESIGN REVIEW COMMITTEE: APPROVED OCT 22 1999 DESIGN REVIEW COMMITTEE
CITY ENGINEER: APPROVED OCT 22 1999 CITY ENGINEER
LAST DESIGN UPDATE: MO./DAY/YR. MO./DAY/YR.

CITY PROJECT NO. ZONE MAP NO. SHEET TS-34 OF

S:\TRANS\GRAPHICS\COA\IMPERIAL
ABEYLFSH.DWG

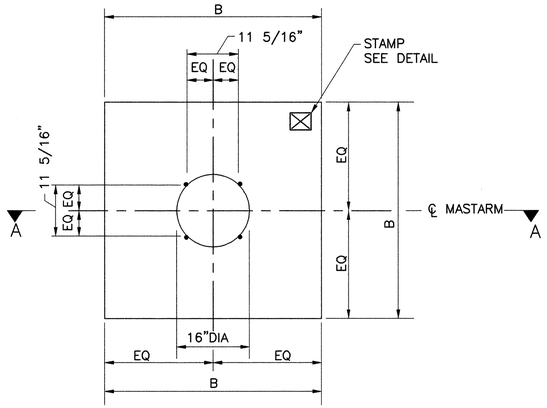

PLAN VIEW (SQUARE)

NO SCALE

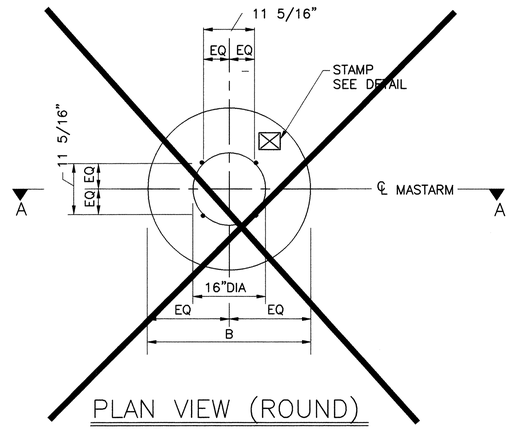

PLAN VIEW (ROUND)

NO SCALE

FOUNDATION DIMENSIONS AND QUANTITIES								
FOUNDATION TYPE	SIGNAL ARM SPAN(FT)	DIMENSION		REINFORCING		REBAR POUNDS	3500 PSI CONCRETE CUBIC YARDS	NOTES
		B (WIDTH)	D (DEPTH)	V BARS MARK	H BARS MARK			
TYPE A (SQUARE)	15 20 25	3'–6" " "	5'–0" " "	#4V2 " "	#3H2 " "	49.1 •	2.27 " "	
TYPE B (SQUARE)	30 35 40	4'–0" " "	6'–3" " "	#5V1 " "	#3H1 " "	82.6	3.70 " "	
TYPE A (ROUND)	15 20 25	2'–6" " "	8'–6" " "	#6V4 " "	#3H4 " "	98.1	1.55 " "	ROUND SHAPE TO BE USED ONLY WHERE SPECIFICALLY NOTED ON PLANS OR WHEN APPROVED BY THE PROJECT MANAGER.
TYPE B (ROUND)	30 35 40	3'–0" " "	11'–9" " "	#7V3 " "	#3H3 " "	179.7	3.08 " "	

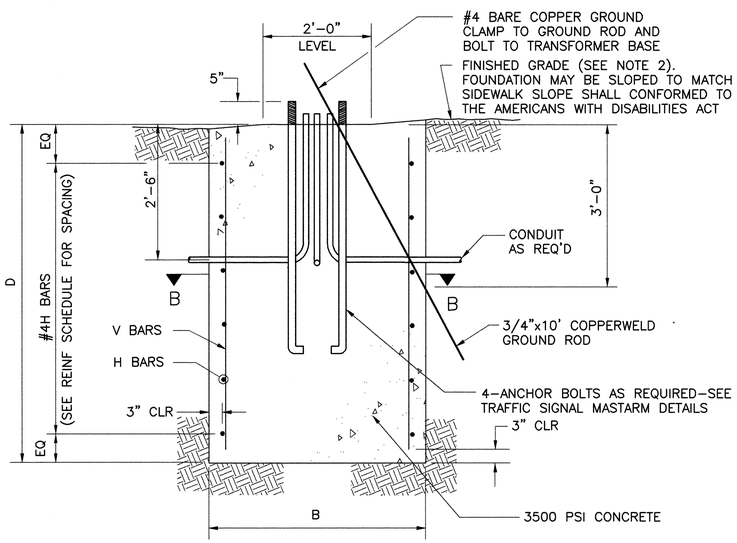

SECTION A–A (ROUND OR SQUARE)

NO SCALE

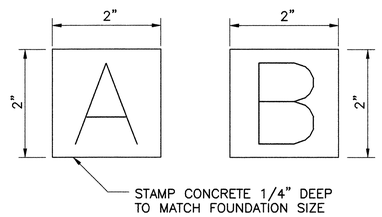

STAMP DETAIL

NO SCALE

REINFORCING SCHEDULE (GRADE 60 BARS)					
MARK	QUANT	TYPE	SIZE	LENGTH	COMMENTS
#5V1	8	1	5	5'–9"	
#4V2	8	1	4	4'–6"	
#7V3	6	1	7	11'–3"	
#6V4	6	1	6	8'–0"	
#3H1	6	2	3	15'–4"	A = 42",TIES AT 14" OC
#3H2	5	2	3	13'–4"	A = 36",TIES AT 12" OC
#3H3	12	3	3	9'–3"	DIA = 30",TIES AT 12" OC
#3H4	9	3	3	7'–8"	DIA = 24",TIES AT 12" OC

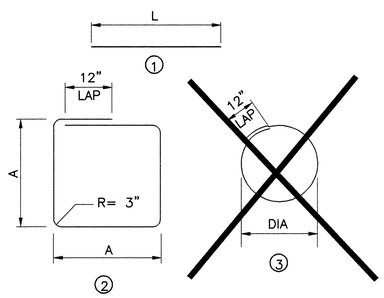

BAR BENDING DIAGRAM

TRAFFIC SIGNAL MASTARM FOUNDATION NOTES

1. REFER TO THE PLANS FOR LOCATIONS OF TRAFIC SIGNAL MASTARM FOUNDATIONS.
2. FINISHED GRADE FOR THE FOUNDATIONS SHALL BE ESTABLISHED IN THE FIELD BY THE PROJECT MANAGER.
3. THE FOUNDATIONS SHOWN HERE SHALL BE CONSTRUCTED IN ACCORDANCE WITH THE CITY OF ALBUQUERQUE STANDARD SPECIFICATIONS FOR PUBLIC WORKS CONSTRUCTION, CURRENT REVISION.
4. CONCRETE SHALL BE 3500 PSI FOR EXTERIOR STRUCTURES. REFER TO TABLE 101.C OF THE SPECIFICATIONS.
5. REINFORCING STEEL SHALL CONFORM TO ASTM A–615 GRADE 60.
6. THE TOP 6 INCHES OF THE FOUNDATION PEDESTAL SHALL BE FORMED TO THE DIMENSIONS SHOWN ON THIS SHEET TO FORM NEAT LINES. CONCRETE BELOW 6 LINES MAY BE CAST AGAINST THE EARTH.
7. THE CONCRETE SHALL GAIN 80% OF THE DESIGN STRENGTH PRIOR TO INSTALLING THE TRAFFIC SIGNAL MASTARM.
8. ALL FOUNDATIONS SHALL INCLUDE COPPERWELD GROUND RODS. ALL GROUND RODS SHALL BE 3/4" DIA X 10'–0" AND WILL BE CONSIDERED INCIDENTAL TO THE FOUNDATIONS BID ITEMS.
9. ALL FOUNDATIONS SHALL BE STAMPED EITHER "A" OR "B" TO SHOW TYPE CONSTRUCTED (SEE STAMP DETAIL).

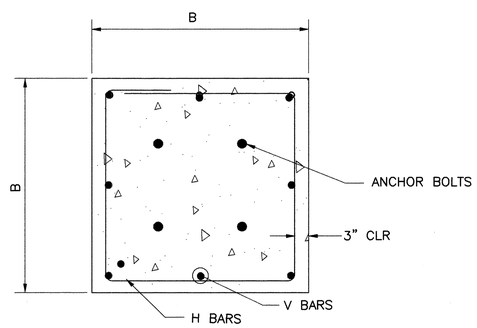

SECTION B–B (SQUARE)

NO SCALE

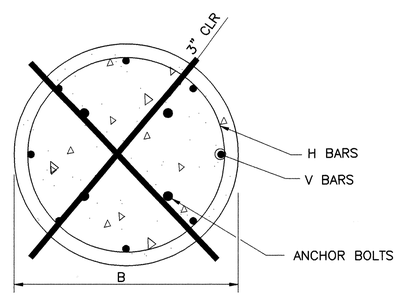

SECTION B–B (ROUND)

NO SCALE

FOR INFORMATION ONLY

AS–BUILT INFORMATION: CONTRACTOR / WORK STAKED BY / INSPECTOR'S ACCEPTANCE BY / FIELD INSPECTION BY / DRAWINGS CORRECTED BY — DATE; MICRO–FILM INFORMATION: RECORDED BY / DATE / NO.

BENCH MARKS

SURVEY INFORMATION: FIELD NOTES — NO. / BY / DATE

ENGINEER'S SEAL

NO.	DATE	REMARKS	BY
		REVISIONS	
		DESIGN	
		DESIGNED BY COA	DATE 8–97
		DRAWN BY COA	DATE 8–97
		CHECKED BY COA	DATE 8–97

CITY OF ALBUQUERQUE
PUBLIC WORKS DEPARTMENT
ENGINEERING DEVELOPMENT GROUP

TITLE: TRAFFIC SIGNAL
FOUNDATION DETAILS TYPE II AND TYPE III STANDARDS

DESIGN REVIEW COMMITTEE: APPROVED OCT 22 1999 DESIGN REVIEW COMMITTEE

CITY ENGINEER APPROVAL: APPROVED OCT 22 1999 CITY ENGINEER

LAST DESIGN UPDATE — MO./DAY/YR. — MO./DAY/YR.

CITY PROJECT NO. 6042.91 | ZONE MAP NO. C-19 | SHEET TS-16 OF

OFFSITE PHASE

S:\TRANS\GRAPHICS\COA\IMPERIAL

ABESFND.DWG

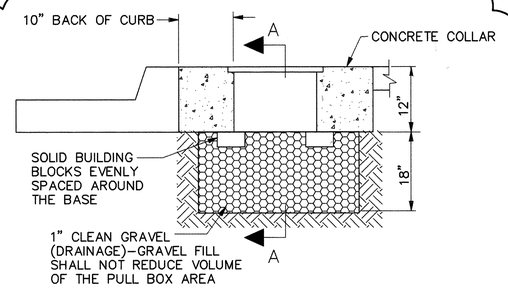

TYPICAL PULL BOX INSTALLATION

NOTE: SEE "CONCRETE COLLAR DETAIL"

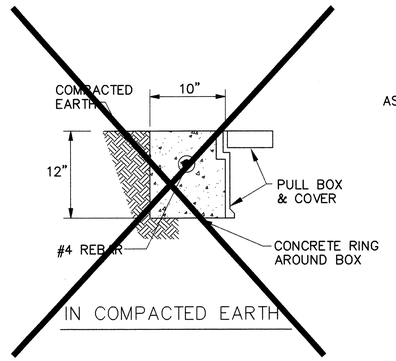

IN COMPACTED EARTH

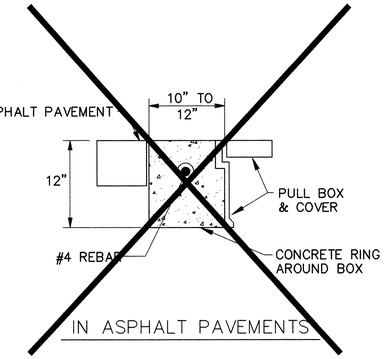

IN ASPHALT PAVEMENTS

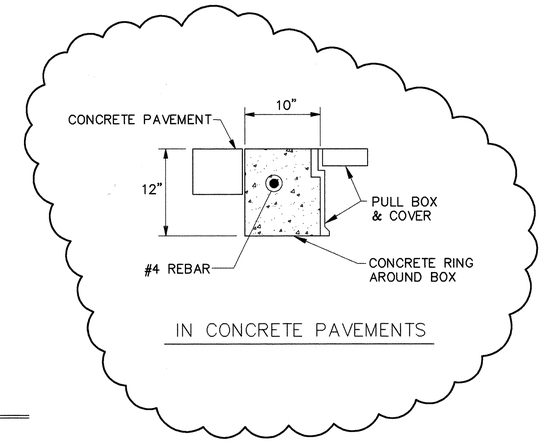

IN CONCRETE PAVEMENTS

CONCRETE COLLAR DETAILS

NOTE: THE CONCRETE COLLAR FOR THE PULL BOXES WILL BE CONSIDERED INCIDENTAL TO THE PULL BOX BID ITEMS

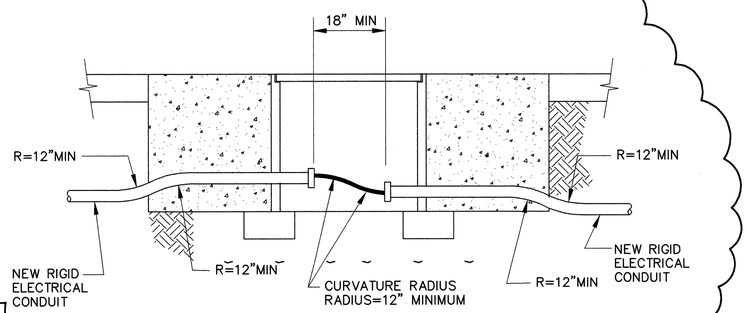

TRAFFIC SIGNAL PULL BOX (TYPICAL)

NEW CONDUIT INSTALLATION

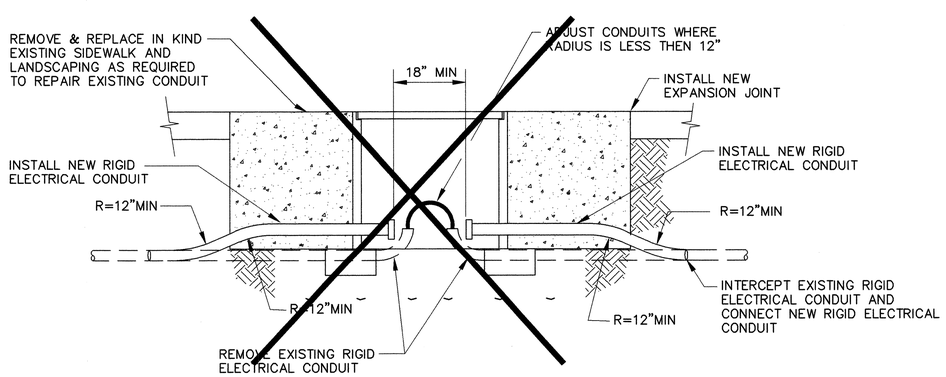

TRAFFIC SIGNAL PULL BOX (TYPICAL)

RETROFIT INSTALLATION

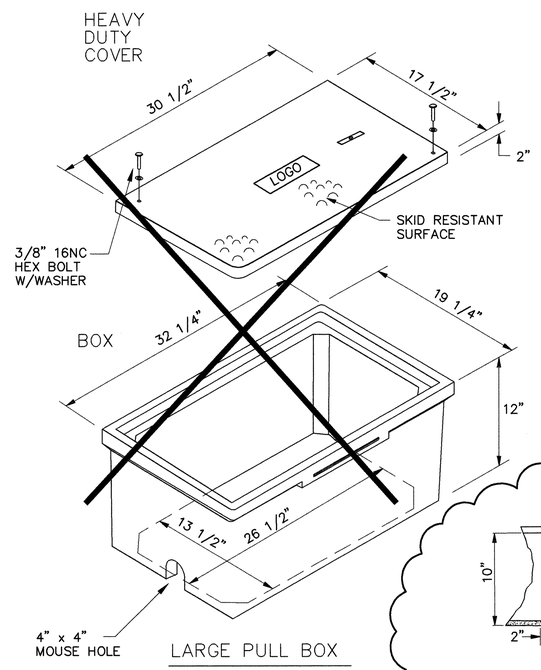

LARGE PULL BOX

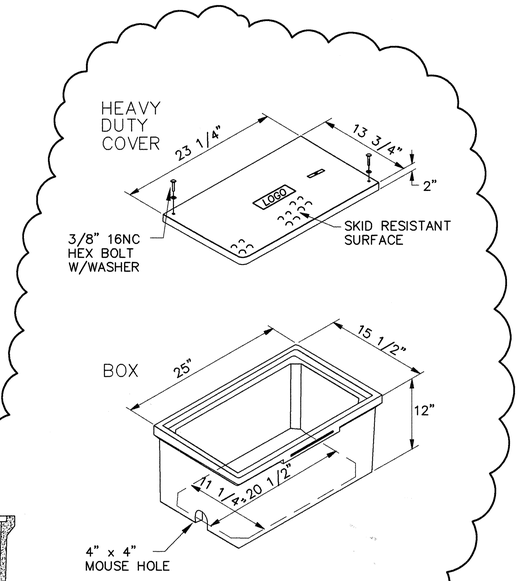

STANDARD PULL BOX

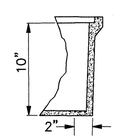

PULL BOX DETAILS

NOTES FOR HEAVY DUTY REINFORCED POLYMER MORTAR PULL BOX AND COVERS

1. MATERIAL TO BE AN AGGREGATE CONSISTING OF SAND AND GRAVEL BOUND TOGETHER WITH A POLYMER AND REINFORCED WITH CONTINUOUS WOVEN GLASS STRANDS. THE MATERIAL MUST HAVE THE FOLLOWING MECHANICAL PROPERTIES: COMPRESSIVE STRENGTH – 11,000 PSI, TENSILE STRENGTH – 1,700 PSI, FLEXURAL STRENGTH – 7,500 PSI.
2. ALL PULL BOX COVERS SHALL BE HEAVY DUTY REINFORCED POLYMER MORTAR, HAVING A SERVICE LOAD OF 22,568 LBS OVER 10" SQUARE (225 PSI).
3. PULL BOX TYPE AND LOGO SHALL BE APPROVED BY THE PROJECT MANAGER.
4. THE DIMENSIONS OF THE PULL BOXES SHOWN ARE NOMINAL DIMENSIONS AND MAY VARY AS TO THE MANUFACTURER'S RECOMMENDATIONS. ALL DIMENSIONS SHALL BE VERIFIED BY THE PROJECT MANAGER.
5. ELECTRICAL PULL BOX (STANDARD) SHALL BE A HEAVY DUTY REINFORCED POLYMER MORTAR PULL BOX AND COVER MEASURING 13 3/4" x 23 1/4" x 2".

OFFSITE PHASE

FOR INFORMATION ONLY

AS-BUILT INFORMATION
CONTRACTOR DATE
WORK STAKED BY DATE
INSPECTOR'S ACCEPTANCE BY DATE
FIELD VERIFICATION BY DATE
DRAWINGS CORRECTED BY DATE
MICRO-FILM INFORMATION
RECORDED BY DATE
NO.

BENCH MARKS

SURVEY INFORMATION
FIELD NOTES
NO. BY DATE

ENGINEER'S SEAL

NO.	DATE	REMARKS REVISIONS DESIGN	BY
		DESIGNED BY COA	DATE 8-97
		DRAWN BY COA	DATE 8-97
		CHECKED BY COA	DATE 8-97

CITY OF ALBUQUERQUE
PUBLIC WORKS DEPARTMENT
ENGINEERING DEVELOPMENT GROUP

TITLE: TRAFFIC SIGNAL PULL BOX DETAILS

DESIGN REVIEW COMMITTEE: APPROVED OCT 22 1999 DESIGN REVIEW COMMITTEE

CITY ENGINEER APPROVAL: APPROVED OCT 22 1999 CITY ENGINEER

LAST DESIGN UPDATE | MO./DAY/YR. | MO./DAY/YR.

CITY PROJECT NO. 6042.91 | ZONE MAP NO. C-19 | SHEET TS-20 OF

S:\TRANS\GRAPHICS\CDA\IMPERIAL

ABEPRD.DWG

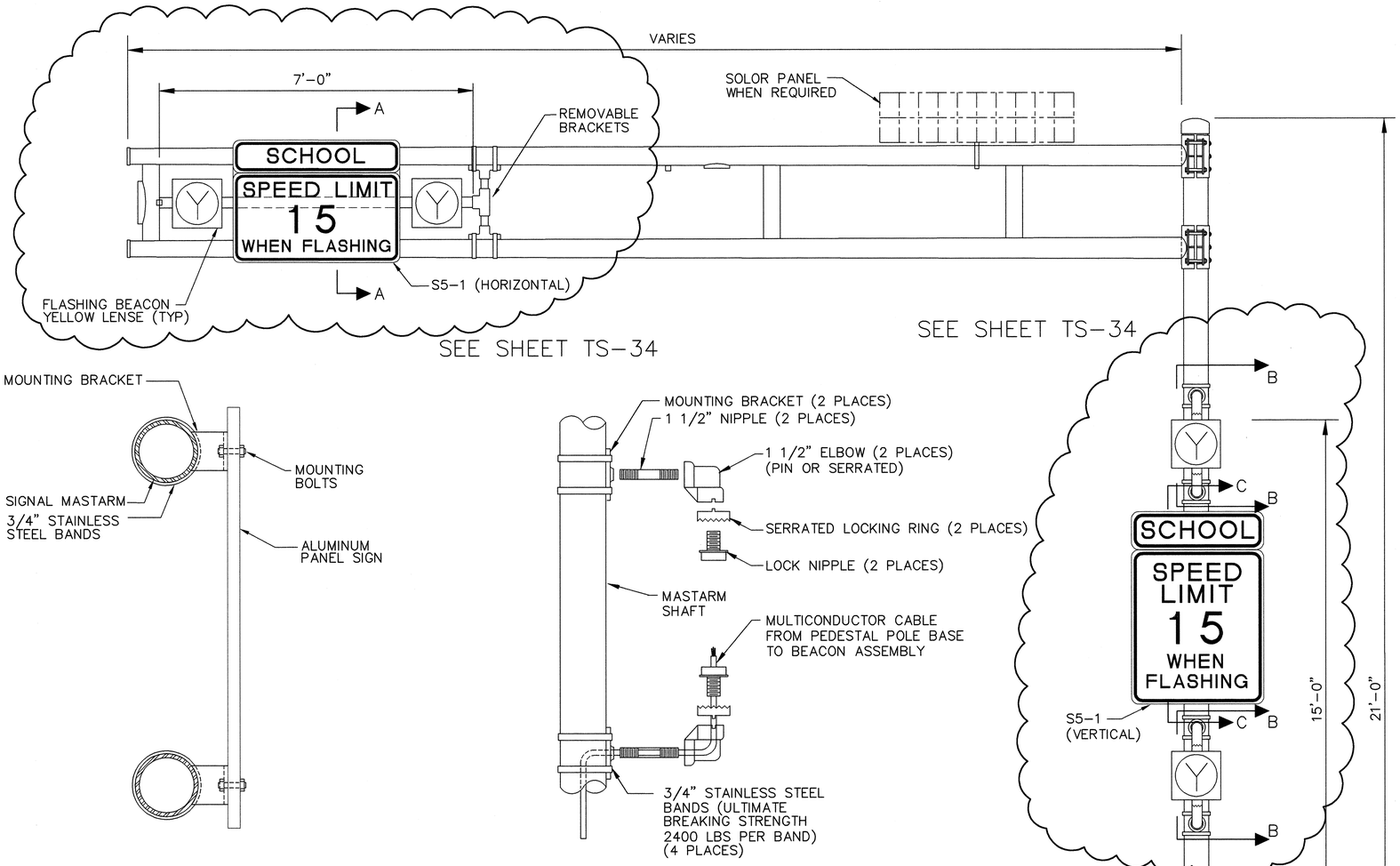

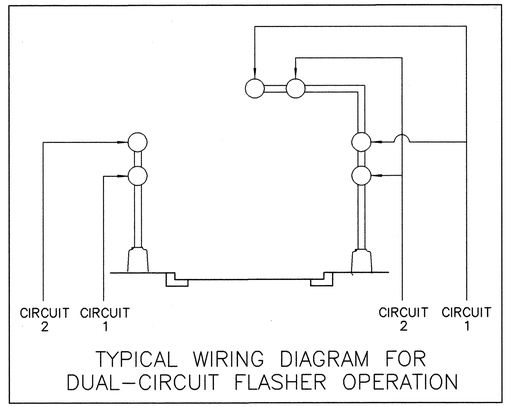

TYPICAL WIRING DIAGRAM FOR DUAL-CIRCUIT FLASHER OPERATION

HORIZONTAL SIGN MOUNT DETAIL

SECTION A-A

SIGNAL MOUNT DETAIL

SECTION B-B

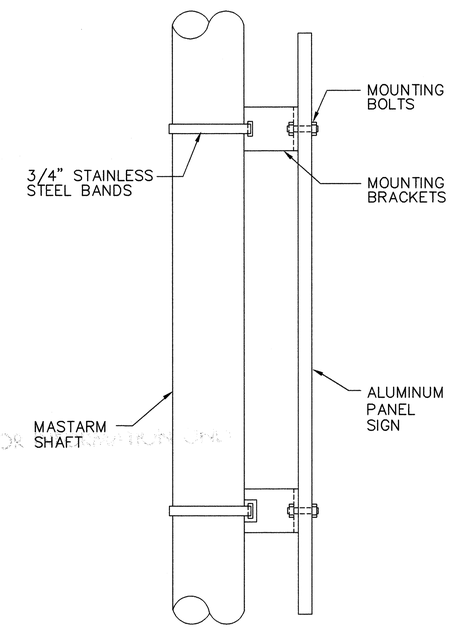

VERTICAL SIGN MOUNT DETAIL

SECTION C-C

FOR INFORMATION ONLY

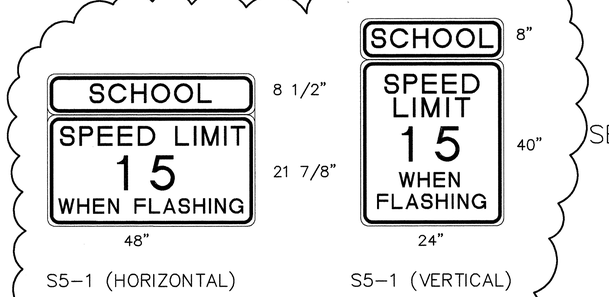

SEE SHEET TS-34

TYPICAL SIGN FACE DETAIL FOR SCHOOL BEACON

COLORS

LEGEND: BLACK(NON-REFLECTIVE)
TOP PANEL: YELLOW
BOTTOM PANEL: WHITE
OUTSIDE BORDER: WHITE
INSIDE BORDER: BLACK

NOTES:

1. EACH SCHOOL BEACON (MASTARM) WILL BE MEASURED AND PAID FOR UNDER THE FOLLOWING ITEMS:

   ITEM 0422.0XX – TRAFFIC SIGNAL MASTARM X' ARM (1 EACH BEACON)

   ITEM 0423.002 – TRAFFIC SIGNAL MASTARM FOUNDATION (1 EACH BEACON)

   ITEM 0427.001 – 1 SECTION TRAFFIC SIGNAL ASSEMBLY (4 EACH BEACON)

   ITEM 0450.001 – ALUMINUM PANEL SIGNS (2 EACH BEACON)

OFFSITE PHASE

AS-BUILT INFORMATION

CONTRACTOR	DATE
WORK STAKED BY	DATE
INSPECTOR'S ACCEPTANCE BY	DATE
FIELD VERIFICATION BY	DATE
DRAWINGS CORRECTED BY	DATE

MICRO-FILM INFORMATION

RECORDED BY	DATE
NO.	

BENCH MARKS

SURVEY INFORMATION

FIELD NOTES

NO.	BY	DATE

ENGINEER'S SEAL

NO.	DATE	REMARKS	BY
		REVISIONS	
		DESIGN	

DESIGNED BY COA DATE 8-97
DRAWN BY COA DATE 8-97
CHECKED BY COA DATE 8-97

CITY OF ALBUQUERQUE
PUBLIC WORKS DEPARTMENT
ENGINEERING DEVELOPMENT GROUP

TITLE: TRAFFIC SIGNAL
SCHOOL BEACON DETAILS (MASTARM)

DESIGN REVIEW COMMITTEE: APPROVED OCT 22 1999 DESIGN REVIEW COMMITTEE

CITY ENGINEER APPROVAL: APPROVED OCT 22 1999 CITY ENGINEER

LAST DESIGN UPDATE | MO./DAY/YR. | MO./DAY/YR.

CITY PROJECT NO. 6042.91 | ZONE MAP NO. C-19 | SHEET TS-36 OF

S:\TRANS\GRAPHICS\COA\IMPERIAL

ABESCFSH2.DWG