CONSTRUCTION PLANS
FOR
7 BAR LOOP PARK & RIDE
ALBUQUERQUE, NEW MEXICO

BOHANNAN HUSTON INC. IS RESPONSIBLE FOR SHEETS G1, C1, C2, C3, C4, C5, C6, C7, C8, E1, E2, E3 AND E4.

JAMES V. FLORES, NEW MEXICO, 14233, REGISTERED PROFESSIONAL ENGINEER

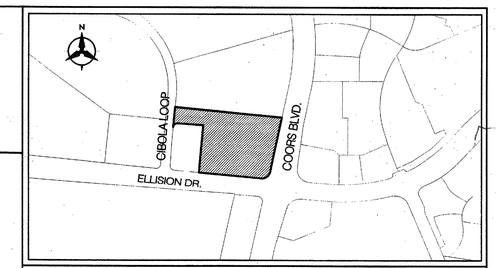

VICINITY MAP ZONE MAP NO. A – 13

INDEX

SHEET NUMBER		DESCRIPTION
G1	1	COVER SHEET
C1	2	OVERALL SITE PLAN
C2	3	OVERALL GRADING PLAN
C3	4	OVERALL HORIZONTAL LAYOUT
C4 - C5	5-6	PAVING PLAN AND PROFILE SHEETS
C6 - C 7	7-8	DRAINAGE PLAN AND PROFILE SHEETS
C8	9	GENERAL CONSTRUCTION DETAILS
C9	10	UTILITY PLAN
A1	11	SITE LOCATION PLAN
A2	12	RESTROOM/STORAGE PLAN
A3	13	BUS SHELTER PLAN AND DETAILS
A4	14	BUS SHELTER PLAN AND DETAILS
A5	15	BUS SHELTER ELEVATIONS
A6	16	SIGN ELEVATIONS
A7	17	STRUCTURAL GENERAL NOTES
M1	18	MECHANICAL AND PLUMBING PLAN
E1	19	ELECTRICAL SITE PLAN
E2	20	ELECTRICAL SCHEDULES AND DETAILS
E3	21	ELECTRICAL WIRING DIAGRAM AND SCHEDULES
E4	22	ELECTRICAL SITE PLAN
E5	23	ELECTRICAL LIGHTING PLAN & DETAILS
E6	24	ELECTRICAL SCHEDULE & DETAILS
L1 - L3	25-27	IRRIGATION PLAN
L4 - L6	28-30	PLANTING PLAN
L7	31	LANDSCAPE DETAILS

NOTICE TO CONTRACTORS

1. AN EXCAVATION/CONSTRUCTION PERMIT WILL BE REQUIRED BEFORE BEGINNING ANY WORK WITHIN THE CITY RIGHT-OF-WAY.
2. ALL WORK DETAILED ON THESE PLANS TO BE PERFORMED UNDER CONTRACT SHALL, EXCEPT AS OTHERWISE STATED OR PROVIDED FOR HEREON, BE CONSTRUCTED IN ACCORDANCE WITH THE CITY OF ALBUQUERQUE STANDARD SPECIFICATIONS FOR PUBLIC WORKS CONSTRUCTION, 1986 EDITION AS REVISED THROUGH UPDATE No.7 INCLUDING AMENDMENT No.1.
3. TWO WORKING DAYS PRIOR TO ANY EXCAVATION, THE CONTRACTOR MUST CONTACT NEW MEXICO ONE CALL SYSTEM (924-3400) FOR LOCATION OF EXISTING UTILITIES.
4. PRIOR TO CONSTRUCTION, THE CONTRACTOR SHALL EXCAVATE AND VERIFY THE HORIZONTAL AND VERTICAL LOCATIONS OF ALL OBSTRUCTIONS. SHOULD A CONFLICT EXIST, THE CONTRACTOR SHALL NOTIFY THE ENGINEER OR SURVEYOR IMMEDIATELY SO THAT THE CONFLICT CAN BE RESOLVED WITH A MINIMUM AMOUNT OF DELAY.
5. FIVE (5) WORKING DAYS PRIOR TO BEGINNING CONSTRUCTION, THE CONTRACTOR SHALL SUBMIT, TO THE CONSTRUCTION COORDINATION DIVISION, A DETAILED CONSTRUCTION SCHEDULE. TWO (2) WORKING DAYS PRIOR TO CONSTRUCTION, THE CONTRACTOR SHALL OBTAIN A BARRICADING PERMIT FROM THE CONST. COORDINATION DIVISION. CONTRACTOR SHALL NOTIFY CONSTRUCTION COORDINATION ENGINEER (924-3400) PRIOR TO OCCUPYING AN INTERSECTION. REFER TO SECTION 19 OF THE GENERAL CONDITIONS OF THE STANDARD SPECIFICATIONS.
6. ALL WORK AFFECTING ARTERIAL ROADWAYS REQUIRES TWENTY-FOUR HOUR CONSTRUCTION.
7. ALL STREET STRIPING ALTERED OR DESTROYED SHALL BE REPLACED W/ PLASTIC REFLECTORIZED PAVEMENT MARKING BY CONTRACTOR TO THE SAME LOCATION AS EXISTING, OR AS INDICATED BY THIS PLAN SET.
8. CONTRACTOR SHALL NOTIFY THE ENGINEER NOT LESS THAN SEVEN (7) DAYS PRIOR TO STARTING WORK IN ORDER THAT THE CITY SURVEYOR MAY TAKE NECESSARY MEASURES TO ENSURE THE PRESERVATION OF SURVEY MONUMENTS. CONTRACTOR SHALL NOT DISTURB PERMANENT SURVEY MONUMENTS WITHOUT THE CONSENT OF THE CITY SURVEYOR AND SHALL NOTIFY THE CITY SURVEYOR AND BEAR THE EXPENSE OF REPLACING ANY THAT MAY BE DISTURBED WITHOUT PERMISSION. REPLACEMENT SHALL BE DONE ONLY BY THE CITY SURVEYOR. WHEN A CHANGE IS MADE IN THE FINISHED ELEVATIONS OF THE PAVEMENT OF ANY ROADWAY IN WHICH A PERMANENT SURVEY MONUMENT IS LOCATED, CONTRACTOR SHALL, AT HIS OWN EXPENSE, ADJUST THE MONUMENT COVER TO THE NEW GRADE UNLESS OTHERWISE SPECIFIED. REFER TO SECTION 4.4 OF THE GENERAL CONDITIONS OF THE STANDARD SPECIFICATIONS.
9. CONTRACTOR SHALL RECORD DATA ON ALL UTILITY LINES AND ACCESSORIES AS REQUIRED BY THE CITY OF ALBUQUERQUE FOR THE PREPARATION OF "AS CONSTRUCTED" DRAWINGS. CONTRACTOR SHALL NOT COVER UTILITY LINES AND ACCESSORIES UNTIL ALL DATA HAS BEEN RECORDED.
10. CONTRACTOR SHALL MAINTAIN A GRAFFITI-FREE WORK SITE. CONTRACTOR SHALL PROMPTLY REMOVE ANY GRAFFITI FROM ALL EQUIPMENT, WHETHER PERMANENT OR TEMPORARY.
11. ALL UTILITY WORK SHALL BE CONSTRUCTED IN ACCORDANCE WITH NEW MEXICO UTILITIES, INC. SPECIFICATIONS FOR WATER AND WASTEWATER FACILITIES (MOST RECENT REVISIONS). THE CONTRACTOR SHALL NOTIFY NEW MEXICO UTILITIES (898-2661) THREE (3) WORKING DAYS PRIOR TO BEGINNING THE CONSTRUCTION OF THE UTILITIES.
12. CONTRACTORS SHALL PROVIDE AND MAINTAIN ALL CONSTRUCTION SIGNING UNTIL PROJECT HAS BEEN ACCEPTED BY THE CITY OF ALBUQUERQUE.

THE FOLLOWING NOTES ALSO APPLY WHEN CHECKED

- ☒ ALL UTILITIES AND UTILITY SERVICE LINES SHALL BE INSTALLED PRIOR TO PAVING.
- ☒ BACKFILL COMPACTION SHALL BE ACCORDING TO SPECIFIED STREET USE.
- ☒ TACK COAT REQUIREMENTS SHALL BE DETERMINED BY THE FIELD ENGINEER.
- ☒ SIDEWALKS AND WHEELCHAIR RAMPS WITHIN THE CURB RETURNS SHALL BE CONSTRUCTED WHEREVER A NEW CURB RETURN IS CONSTRUCTED.
- ☒ IF CURB IS DEPRESSED FOR A DRIVEPAD, THE DRIVEPAD SHALL BE CONSTRUCTED PRIOR TO ACCEPTANCE OF CURB AND GUTTER.
- ☒ ALL STORM DRAINAGE FACILITIES SHALL BE COMPLETED PRIOR TO FINAL ACCEPTANCE.
- ☒ THE REQUESTOR OR DEVELOPER SHALL BE RESPONSIBLE FOR REPAIR OR REPLACEMENT OF ALL CURB AND GUTTER OR SIDEWALK DAMAGED AFTER APPROVAL BY THE CITY ENGINEER OF WORK COMPLETED BY THE CONTRACTOR.

CONSTRUCTION NOTES:

1. THE CONTRACTOR SHALL ABIDE BY ALL LOCAL, STATE, AND FEDERAL LAWS, RULES AND REGULATIONS WHICH APPLY TO THE CONSTRUCTION OF THESE IMPROVEMENTS.

2. ALL ELECTRICAL, TELEPHONE, CABLE TV, GAS AND OTHER UTILITY LINES, CABLES AND APPURTENANCES ENCOUNTERED DURING CONSTRUCTION THAT REQUIRE RELOCATION, SHALL BE COORDINATED WITH THAT UTILITY. THE CONTRACTOR SHALL BE RESPONSIBLE FOR COORDINATION OF ALL NECESSARY UTILITY ADJUSTMENTS. NO ADDITIONAL COMPENSATION WILL BE ALLOWED FOR DELAYS OR INCONVENIENCES CAUSED BY UTILITY COMPANY WORK CREWS. THE CONTRACTOR MAY BE REQUIRED TO RESCHEDULE HIS ACTIVITIES TO ALLOW UTILITY CREWS TO PERFORM THEIR REQUIRED WORK.

3. DISPOSAL SITE FOR ALL EXCESS EXCAVATION MATERIAL, AND UNSUITABLE MATERIAL SHALL BE OBTAINED BY THE CONTRACTOR IN COMPLIANCE WITH APPLICABLE ENVIRONMENTAL REGULATIONS AND APPROVED BY THE CONSTRUCTION OBSERVER. ALL COSTS INCURRED IN OBTAINING A DISPOSAL SITE AND HAUL THERETO SHALL BE CONSIDERED INCIDENTAL TO THE PROJECT AND NO SEPARATE MEASUREMENT OR PAYMENT SHALL BE MADE.

4. THE CONTRACTOR IS RESPONSIBLE FOR PROTECTING THE EXISTING UTILITY LINES WITHIN THE CONSTRUCTION AREA. ANY DAMAGE TO EXISTING FACILITIES CAUSED BY CONSTRUCTION ACTIVITY SHALL BE REPAIRED OR REPLACED AT THE CONTRACTOR'S EXPENSE AND APPROVED BY THE CONSTRUCTION OBSERVER.

5. CONSTRUCTION ACTIVITY SHALL BE LIMITED TO THE PROPERTY AND/OR PROJECT LIMITS. ANY DAMAGE TO ADJACENT PROPERTIES RESULTING FROM THE CONSTRUCTION PROCESS IS THE RESPONSIBILITY OF THE CONTRACTOR. ANY COSTS INCURRED FOR REPAIRS SHALL BE THE COST OF THE CONTRACTOR.

6. OVERNIGHT PARKING OF CONSTRUCTION EQUIPMENT SHALL NOT OBSTRUCT DRIVEWAYS OR DESIGNATED TRAFFIC LANES. THE CONTRACTOR SHALL NOT STORE ANY EQUIPMENT OR MATERIAL WITHIN THE PUBLIC RIGHT-OF-WAY.

7. THE CONTRACTOR SHALL OBTAIN ALL THE NECESSARY PERMITS FOR THE PROJECT PRIOR TO COMMENCING CONSTRUCTION (I.E. BARRICADING, SURFACE DISTURBANCE)

8. THE CONTRACTOR SHALL BE RESPONSIBLE TO REPLACE AT HIS EXPENSE ANY AND ALL PROPERTY CORNERS DESTROYED DURING CONSTRUCTION. ALL PROPERTY CORNERS MUST BE RESET BY A REGISTERED LAND SURVEYOR.

9. ALL PERMANENT PAVEMENT MARKING AND TRAFFIC SIGNING SHALL BE FURNISHED BY THE CONTRACTOR PER PLAN.

10. THE CONTRACTOR SHALL FOLLOW THE CONSTRUCTION TRAFFIC CONTROL AND SIGNING PLAN PROVIDED HEREIN. THE CONTRACTOR SHALL COORDINATE WITH THE CITY OF ALBUQUERQUE, TRAFFIC ENGINEERING DEPARTMENT, PRIOR TO BEGINNING ANY CONSTRUCTION WORK ON OR ADJACENT TO EXISTING STREETS.

11. ALL BARRICADES AND CONSTRUCTION SIGNING SHALL CONFORM TO APPLICABLE SECTIONS OF THE "MANUAL OF UNIFORM TRAFFIC CONTROL DEVICES" (MUTCD), U.S. DEPARTMENT OF TRANSPORTATION, LATEST EDITION.

12. THE CONTRACTOR SHALL MAINTAIN ALL CONSTRUCTION BARRICADES AND SIGNING AT ALL TIMES. THE CONTRACTOR SHALL VERIFY THE PROPER LOCATION OF ALL BARRICADING AT THE END AND BEGINNING OF EACH DAY.

13. ALL SAWCUT PAVEMENT SHALL HAVE A UNIFORM EDGE AND BE SPRAYED WITH TACK.

14. WHEN ABUTTING NEW CURB AND GUTTER TO EXISTING PAVEMENT, A 1' WIDE SECTION OF EXISTING PAVEMENT ADJACENT TO THE CURB AND GUTTER SHALL BE SAWCUT, REMOVED, AND REPLACED AS PER THE STANDARD SPECIFICATIONS.

15. THE CONTRACTOR SHALL ASSUME RESPONSIBILITY FOR ANY DAMAGE TO EXISTING PAVEMENTS, PAVEMENT MARKINGS, CURB & GUTTER, DRIVE PADS, WHEELCHAIR RAMPS, AND SIDEWALK DURING CONSTRUCTION, APART FROM THOSE SECTIONS INDICATED FOR REMOVAL ON THE PLANS AND SHALL REPAIR OR REPLACE PER COA STANDARDS, AT HIS OWN EXPENSE.

16. FOR STORM DRAIN CONSTRUCTION, RCP PIPE JOINTS SHALL NOT BE GROUTED PRIOR TO FINAL INSPECTION. FINAL INSPECTION WILL DETERMINE JOINTS TO BE GROUTED FOR FINAL ACCEPTANCE OF THE CONSTRUCTION.

17. ALL EXCAVATION, TRENCHING, AND SHORING ACTIVITIES MUST BE CARRIED-OUT IN ACCORDANCE WITH OSHA 29 CFR 1926.650 SUBPART P.

PHILLIP J. LONDO, NEW MEXICO, 17827, 11/30/07, PROFESSIONAL ENGINEER

DMJM HÉN | AECOM IS RESPONSIBLE FOR SHEETS C9, A1, A2, A3, A4, A5, A6, A7, M1, E5 AND E6.

Bohannan ▲ Huston INC.
Courtyard I 7500 Jefferson St. NE Albuquerque, NM 87109-4335
ENGINEERING ▲ SPATIAL DATA ▲ ADVANCED TECHNOLOGIES

REV.	SHEETS	CITY ENGINEER	DATE	USER DEPARTMENT	DATE	USER DEPARTMENT	DATE

ENGINEERS STAMP & SIGNATURE: JAMES V. FLORES, NEW MEXICO, 14233, REGISTERED PROFESSIONAL ENGINEER

APPROVALS	ENGINEER	DATE
DRC Chairman		12-24-07
Transportation		11-27-07
Water/Wastewater		11-28-07
Hydrology		12/24/07
Parks		
Const. Mngmt.		
Const. Coord.		
NMUI		11-26-07

********** APPROVED FOR CONSTRUCTION

CITY ENGINEER DATE 12-24-07

CITY ARCHITECT DATE 12/21/07

DRB CASE NUMBER	CITY PROJECT NO.	SHEET	OF
1000593	6065.01	G1	G1

P:\080024\FPE\Design\Sheets\080024-Cover-G1.dwg
Mon, 26-Nov-2007 - 9:49:am, Plotted by: RGIBSON

28

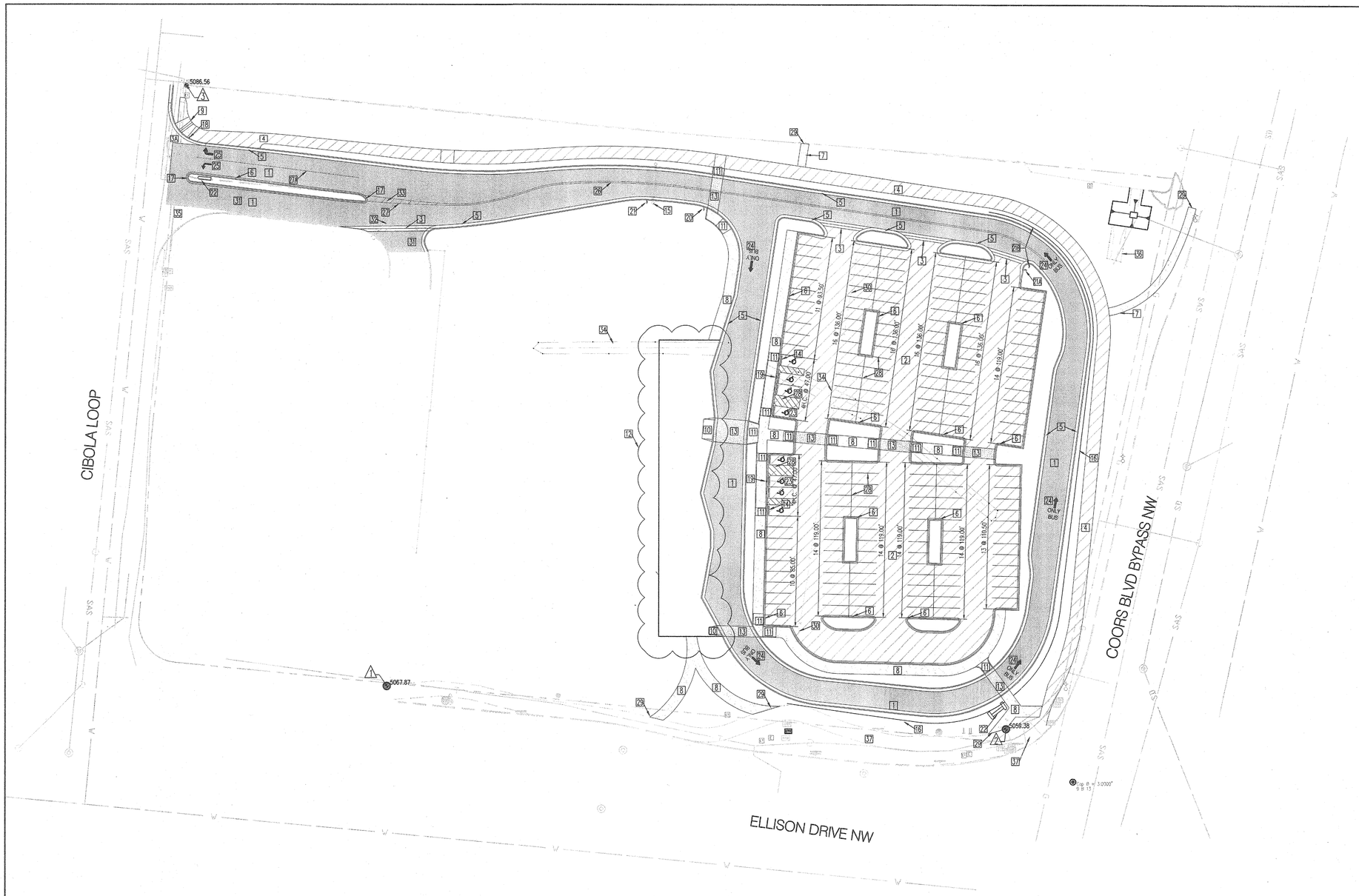

KEYED NOTES

1. BUILD ROADWAY PAVEMENT SECTION PER SECTION 1, SHEET C8.
2. BUILD PARKING PAVEMENT SECTION PER SECTION 2, SHEET C8.
3. INSTALL CONCRETE VALLEY GUTTER PER COA STD. DWG. 2421.
3A. INSTALL CONCRETE VALLEY GUTTER PER COA STD. DWG. 2420.
4. BUILD JOINT USE PAVEMENT SECTION PER SECTION 3, SHEET C8.
5. BUILD STD. CURB AND GUTTER PER COA STD. DWG. 2415A.
6. BUILD MEDIAN TYPE CURB AND GUTTER PER COA STD. DWG. 2415B.
7. BUILD 6' SIDEWALK PER COA STD. DWG. 2430.
8. BUILD 8' SIDEWALK PER COA STD. DWG. 2430.
9. INSTALL HANDICAP RAMP PER COA STD. DWG. 2441.
10. INSTALL HANDICAP RAMP PER CURB RAMP DETAIL A, SHEET C8.
11. INSTALL HANDICAP RAMP PER CURB RAMP DETAIL B, SHEET C8.
12. BUS SHELTER SLAB REFER TO ARCHITECTURAL DRAWINGS
13. INSTALL DECOMARK PAVERS HERRING BONE PATTERN 125 MILS OR APPROVED EQUAL INSTALLED AS PER MANUFACTURES RECOMMENDATIONS

REFER TO 6065.03

14. INSTALL CONCRETE PARKING BUMPERS PER DETAIL SHEET C8.
15. INSTALL 28' GATE PER COA STD. DWG. 2251 PAINT TO MATCH BUS CANOPY WITH NO OUTLET SIGN W14-2 AND END OF ROAD REFLECTIVE MARKERS OM4-2 PER MUTCD ON EACH GATE.
16. INSTALL ORNAMENTAL FENCE SEE FENCE DETAIL SHEET C8.
17. PAINT MEDIAN NOSE REFLECTIVE YELLOW
18. INSTALL NEW STOP SIGN PER MUTCD
19. INSTALL HANDICAP PARKING SIGN PER MUTCD
20. INSTALL BUS ONLY SIGN PER MUTCD
21. INSTALL NO OVERNIGHT PARKING SIGN IN ACCORDANCE WITH MUTCD
21A. INSTALL SIGN R3-1 & R3-1P IN ACCORDANCE WITH MUTCD.
21B. INSTALL SIGN R5-1 IN ACCORDANCE WITH MUTCD.
22. INSTALL MONUMENT SIGN COORDINATE WITH COA FIELD ENGINEER FOR COLOR AND DESIGN.
23. PAINT HANDICAP SYMBOL AS PER MUTCD WHITE
24. PAINT WHITE DIRECTIONAL ARROW w/ "BUS ONLY" AS PER MUTCD
25. PAINT WHITE DIRECTIONAL ARROW AS PER MUTCD
26. PAINT 2" SOLID DOUBLE YELLOW STRIPE AS PER MUTCD
27. PAINT 2" SOLID YELLOW STRIPE EXTENDING 50 LINEAL FEET BEYOND ISLAND. DIAGONALS ON 5' CENTERS AS PER MUTCD
27A. PAINT 2" SOLID WHITE STRIPE AS PER MUTCD.
28. PAINT 2" SOLID WHITE PARKING STRIPE DIAGONALS ON 3' CENTERS AS PER MUTCD.
29. MATCH AND TIE TO EXISTING SIDEWALK
30. EXISTING FENCE TO BE REMOVED
31. EXISTING PAVEMENT TO BE SAWCUT AND REMOVED
32. EXISTING VALLEY GUTTER TO BE REMOVED
33. EXISTING CURB & GUTTER TO BE REMOVED
34. EXISTING RIP RAP TO BE REMOVED
35. PRESERVE AND PROTECT EXISTING VALLEY GUTTER, AND CURB AND GUTTER.
36. EXISTING CONCRETE RUNDOWN TO BE REMOVED.
37. PRESERVE AND PROTECT EXISTING ADA RAMP AND SIDEWALK.

LEGEND

- HANDICAP SYMBOL
- ASPHALT JOINT USE PATH/ASPHALT PARKING
- BUS LOOP PAVEMENT
- CONCRETE PAVER
- CONCRETE PAVEMENT
- EXISTING CURB & GUTTER
- PROPOSED CURB & GUTTER
- EXISTING ROW LINE

N

40 20 0 40

SCALE: 1"=40'

BHI JOB NO. 080024

P:\080024\FPE\Design\Sheets\080024-Site Plan-C1.dwg
Fri, 9-Nov-2007 - 11:39:am, Plotted by: RGIBSON

AS-BUILT INFORMATION

	DATE
CONTRACTOR	
WORK STAKED BY	
WORK VERIFIED BY	
ACCEPTANCE BY	
FIELD VERIFICATION BY	
DRAWINGS CORRECTED BY	

MICRO-FILM INFORMATION

	DATE
RECORDED BY	
NO.	

BENCH MARKS

△	EASTING	NORTHING
1	1518121.34	1531033.20
2	1516588.79	1531000.98
3	1517968.99	1531490.91

SURVEY INFORMATION

FIELD NOTES

NO.	BY	DATE

ENGINEER'S SEAL

GREGORY R. GIBSON NEW MEXICO 14233 PROFESSIONAL ENGINEER
JAMES V. FLINN NEW MEXICO 9750 PROFESSIONAL ENGINEER
11-16-07

NO.	DATE	REMARKS	BY

REVISIONS

DESIGN

		DATE
DESIGNED BY	RGG	07/2007
DRAWN BY	RGG	07/2007
CHECKED BY	JF	07/2007

Bohannan ▲ Huston

Courtyard I 7500 Jefferson St. NE Albuquerque, NM 87109-4335

ENGINEERING ▲ SPATIAL DATA ▲ ADVANCED TECHNOLOGIES

CITY OF ALBUQUERQUE
DEPARTMENT OF MUNICIPAL DEVELOPMENT

7 BAR LOOP PARK & RIDE
SITE PLAN

DESIGN REVIEW COMMITTEE	CITY ENGINEER APPROVAL	LAST DESIGN UPDATE	MO./DAY/YR.	MO./DAY/YR.
APPROVED DEC 24 2007 DESIGN REVIEW COMMITTEE	APPROVED DEC 24 2007 CITY ENGINEER			

CITY PROJECT NO.	ZONE MAP NO.	SHEET	OF
6065.01	A - 13	C1	C8

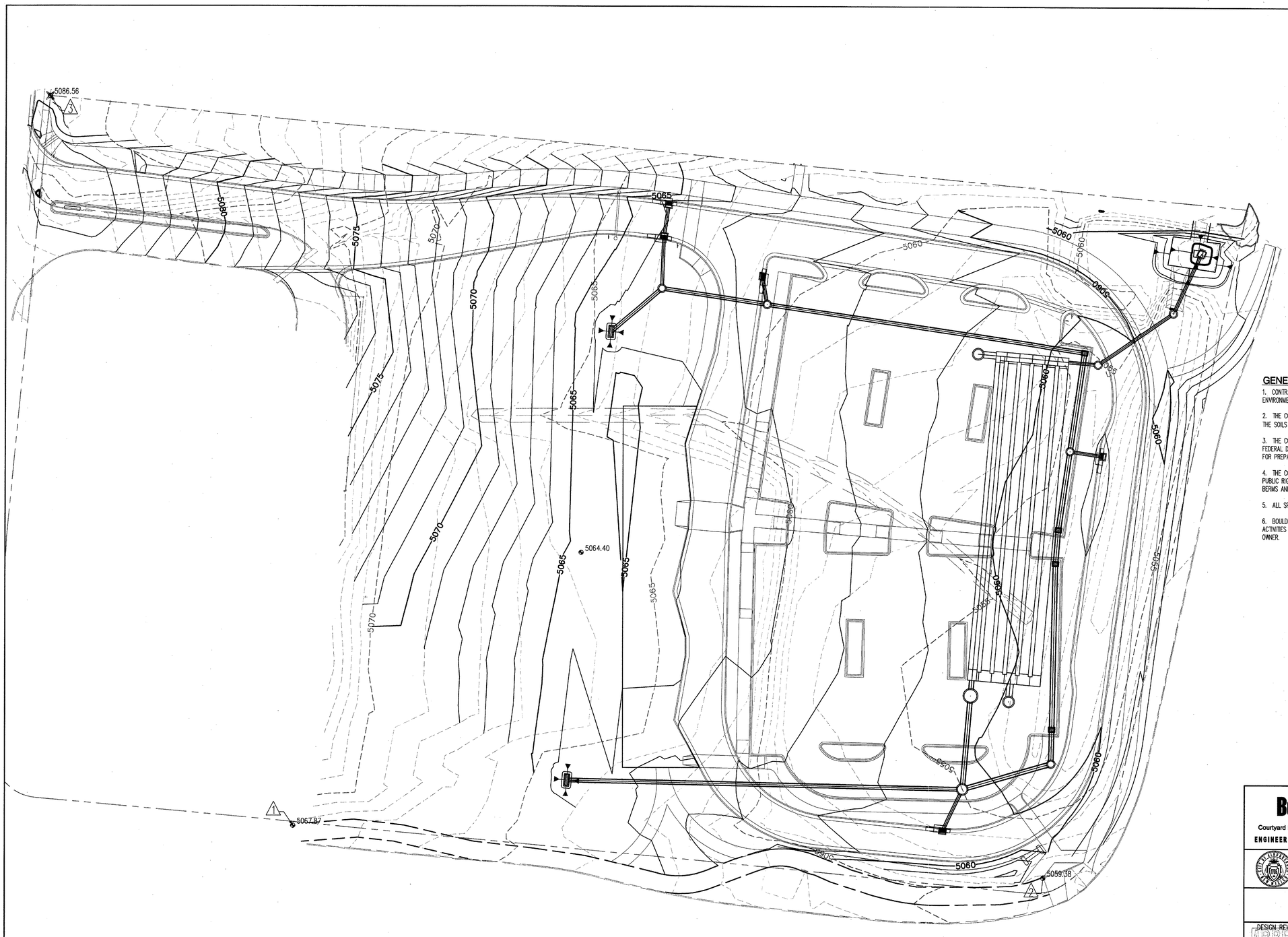

LEGEND

- (91.62) FUTURE SPOT ELEVATION
- 91.62 PROPOSED SPOT ELEVATION
- × 92.46 EXISTING SPOT ELEVATION (GRND & TC)
- EXISTING CURB & GUTTER
- PROPOSED MOUNTABLE CURB & GUTTER
- PROPOSED STANDARD CURB & GUTTER
- 5470 EXISTING CONTOUR W/ INDEX ELEVATION
- FLOW ARROW
- PROPOSED RETAINING WALL
- PROPOSED GARDEN WALL, CONCRETE FILLED TO 1-FOOT DEPTH
- PROPOSED SLOPE
- PROPOSED STORM DRAIN
- PROPOSED STORM DRAIN MANHOLE
- PROPOSED STORM DRAIN INLET
- PROPOSED CATTLE GUARD INLET
- WALL DRAIN

GENERAL NOTES

1. CONTRACTOR MUST OBTAIN A TOPSOIL DISTURBANCE PERMIT FROM THE ENVIRONMENTAL HEALTH DIVISION PRIOR TO CONSTRUCTION.

2. THE CONTRACTOR IS TO REFER TO EARTHWORK SPECIFICATION AS NOTED IN THE SOILS REPORT.__/__

3. THE CONTRACTOR SHALL CONFORM TO ALL CITY, COUNTY, STATE, AND FEDERAL DUST CONTROL MEASURES & REQUIREMENTS AND WILL BE RESPONSIBLE FOR PREPARING AND OBTAINING ALL NECESSARY APPLICATIONS AND APPROVALS.

4. THE CONTRACTOR SHALL ENSURE THAT NO SOIL ERODES FROM THE LOTS INTO PUBLIC RIGHT-OF-WAY. THIS CAN BE ACHIEVED BY CONSTRUCTING TEMPORARY BERMS AND WETTING THE SOIL TO KEEP IT FROM BLOWING.

5. ALL SPOT ELEVATIONS ARE TO FLOWLINE UNLESS OTHERWISE NOTED.

6. BOULDERS GREATER THAN 3 FEET IN DIAMETER EXCAVATED DURING GRADING ACTIVITIES SHALL BE STOCKPILED AND DISPOSED OF AT THE DISCRETION OF THE OWNER.

N

30 15 0 30
SCALE: 1"=30'

Bohannan ▲ Huston
Courtyard I 7500 Jefferson St. NE Albuquerque, NM 87109-4335
ENGINEERING ▲ SPATIAL DATA ▲ ADVANCED TECHNOLOGIES

CITY OF ALBUQUERQUE
DEPARTMENT OF MUNICIPAL DEVELOPMENT

7 BAR LOOP PARK & RIDE
GRADING PLAN

DESIGN REVIEW COMMITTEE	CITY ENGINEER APPROVAL	LAST DESIGN UPDATE	MO./DAY/YR.	MO./DAY/YR.
APPROVE DEC 24 2007 DESIGN REVIEW COMMITTEE	APPROVE DEC 24 2007 CITY ENGINEER			

CITY PROJECT NO.	ZONE MAP NO.	SHEET	OF
6065.01	A – 13	C2	C8

AS-BUILT INFORMATION

	DATE
CONTRACTOR	
WORK STAKED BY	
ACCEPTANCE INSPECTION BY	
FIELD VERIFICATION BY	
DRAWINGS CORRECTED BY	

MICRO-FILM INFORMATION

	DATE
RECORDED BY	
NO.	

BENCH MARKS

	EASTING	NORTHING
1	1518721.34	1531033.20
2	1518588.79	1531000.98
3	1517966.99	1531490.91

SURVEY INFORMATION
FIELD NOTES

NO.	BY	DATE

ENGINEER'S SEAL
JAMES V. FLOYD
NEW MEXICO
14233
PROFESSIONAL ENGINEER
12-30-07

NO.	DATE	REMARKS	BY
		REVISIONS	
		DESIGN	

DESIGNED BY	RGG	DATE 07/2007
DRAWN BY	RGG	DATE 07/2007
CHECKED BY	JF	DATE 07/2007

P:\080024\FPE\Design\Sheets\080024-Grading Plan-C2.dwg
Fri, 9-Nov-2007 – 11:40:am, Plotted by: RGIBSON

BHI JOB NO. 080024

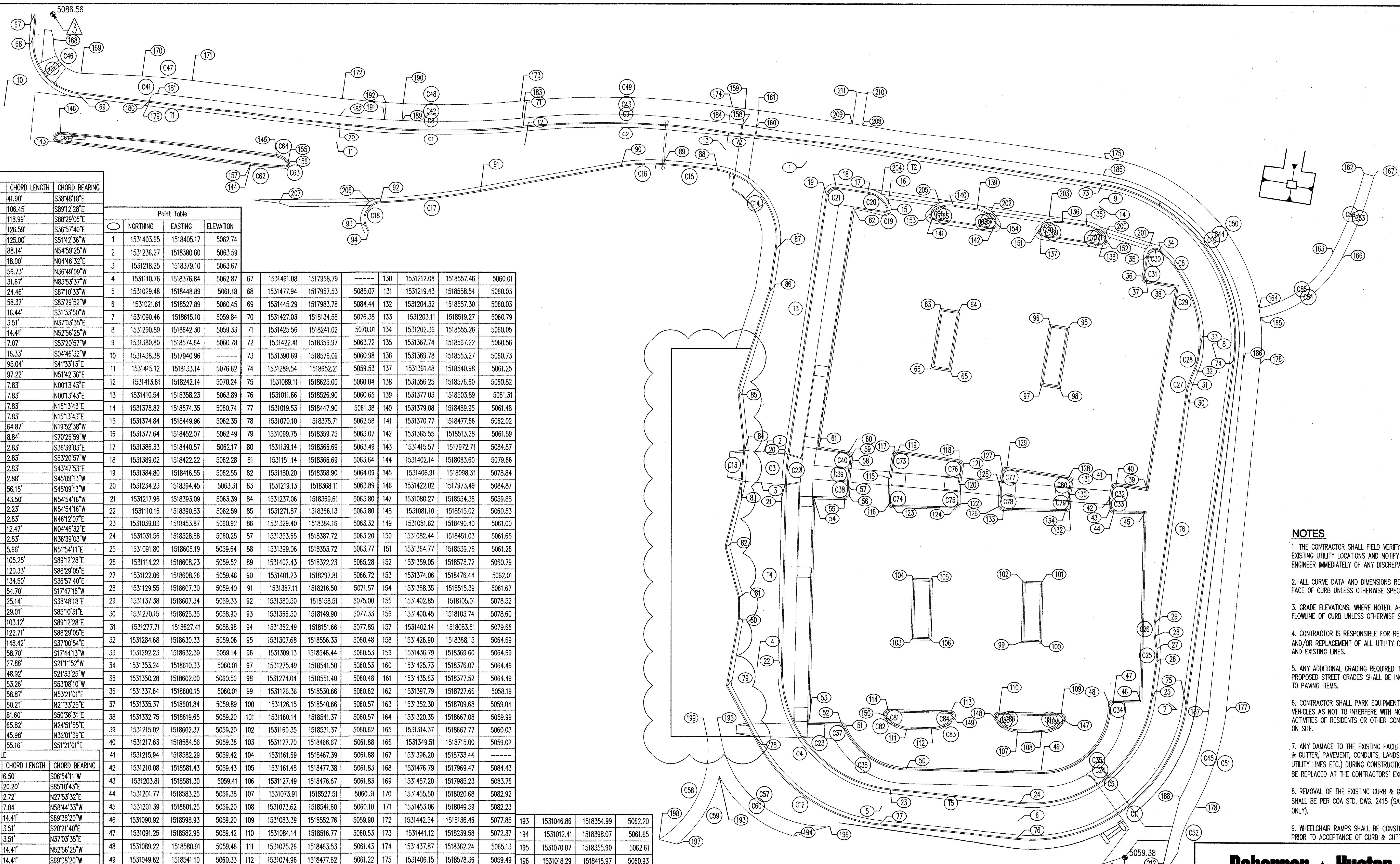

CURVE TABLE

ID	DELTA	TANGENT	ARC	RADIUS	CHORD LENGTH	CHORD BEARING
C7	88°35'02"	29.27'	46.38'	30.00'	41.90'	S38°48'18"E
C8	12°13'17"	53.53'	106.65'	500.00'	106.45'	S89°12'28"E
C9	13°40'04"	59.92'	119.27'	500.00'	118.99'	S88°29'05"E
C10	89°22'46"	89.03'	140.40'	90.00'	126.59'	S36°57'40"E
C11	87°57'45"	86.85'	138.17'	90.00'	125.00'	S51°42'36"W
C12	58°38'13"	50.54'	92.11'	90.00'	88.14'	N54°59'25"W
C13	06°39'27"	9.02'	18.01'	155.00'	18.00'	N04°46'32"E
C14	90°20'12"	40.24'	63.07'	40.00'	56.73'	N36°49'09"W
C15	03°48'45"	15.84'	31.67'	476.00'	31.67'	N83°53'37"W
C16	14°02'55"	12.32'	24.52'	100.00'	24.46'	S87°10'33"W
C17	06°41'33"	29.24'	58.40'	500.00'	58.37'	S83°29'52"W
C18	110°33'38"	14.43'	19.30'	10.00'	16.44'	S31°33'50"W
C19	122°34'44"	3.65'	4.28'	2.00'	3.51'	N37°03'35"E
C20	57°25'16"	8.22'	15.03'	15.00'	14.41'	N52°56'25"W
C21	90°00'00"	5.00'	7.85'	5.00'	7.07'	S53°20'57"W
C22	07°08'50"	8.18'	16.34'	131.00'	16.33'	S04°46'32"W
C23	85°30'39"	64.72'	104.47'	70.00'	95.04'	S41°33'13"E
C24	87°57'45"	67.55'	107.47'	70.00'	97.22'	N51°42'36"E
C25	15°00'00"	3.95'	7.85'	30.00'	7.83'	N00°13'43"E
C26	15°00'00"	3.95'	7.85'	30.00'	7.83'	N00°13'43"E
C27	15°00'00"	3.95'	7.85'	30.00'	7.83'	N15°13'43"E
C28	15°00'00"	3.95'	7.85'	30.00'	7.83'	N15°13'43"E
C29	55°12'43"	36.60'	67.45'	70.00'	64.87'	N19°52'38"W
C30	124°10'03"	9.44'	10.84'	5.00'	8.84'	S70°25'59"W
C31	90°00'00"	2.00'	3.14'	2.00'	2.83'	S36°39'03"E
C32	90°00'00"	2.00'	3.14'	2.00'	2.83'	S53°20'57"W
C33	90°00'00"	2.00'	3.14'	2.00'	2.83'	S43°47'53"E
C34	92°05'48"	2.07'	3.21'	2.00'	2.88'	S45°09'13"W
C35	92°05'48"	40.45'	62.69'	39.00'	56.15'	S45°09'13"W
C36	67°47'14"	26.20'	46.14'	39.00'	43.50'	N54°54'16"W
C37	67°47'14"	1.34'	2.37'	2.00'	2.23'	N54°54'16"W
C38	90°00'00"	2.00'	3.14'	2.00'	2.83'	N46°12'07"E
C39	07°08'50"	6.25'	12.47'	100.00'	12.47'	N04°46'32"E
C40	90°00'00"	2.00'	3.14'	2.00'	2.83'	N36°39'03"W
C41	90°00'00"	4.00'	6.28'	4.00'	5.66'	N51°54'11"E
C42	12°13'17"	52.93'	105.45'	494.37'	105.25'	S89°12'28"E
C43	13°40'04"	60.60'	120.62'	505.63'	120.33'	S88°29'05"E
C44	89°22'46"	94.59'	149.17'	95.63'	134.50'	S36°57'40"E
C45	21°34'47"	27.84'	55.03'	146.10'	54.70'	S17°47'16"W
C46	88°35'02"	17.56'	27.83'	18.00'	25.14'	S38°48'18"E
C47	04°09'24"	14.52'	29.02'	400.00'	29.01'	S85°10'31"E
C48	12°13'17"	51.86'	103.32'	484.37'	103.12'	S89°12'28"E
C49	13°40'04"	61.79'	123.00'	515.62'	122.71'	S88°29'05"E
C50	89°16'17"	104.29'	164.57'	105.63'	148.42'	S37°00'54"E
C51	21°41'16"	29.89'	59.05'	156.01'	58.70'	S17°44'13"W
C52	24°21'49"	14.25'	28.07'	66.01'	27.86'	S21°11'52"W
C53	12°17'21"	24.60'	49.01'	228.52'	48.92'	S21°33'25"W
C54	50°52'08"	29.49'	55.05'	62.00'	53.26'	S53°08'10"W
C55	51°17'50"	32.65'	60.88'	68.00'	58.87'	N53°21'01"E
C56	12°17'21"	25.25'	50.30'	234.52'	50.21'	N21°33'25"E
C57	85°41'21"	55.65'	89.73'	60.00'	81.60'	S50°36'31"E
C58	66°31'29"	39.36'	69.66'	60.00'	65.82'	N24°51'55"E
C59	39°31'08"	24.43'	46.90'	68.00'	45.98'	N32°01'39"E
C60	47°51'26"	30.17'	56.80'	68.00'	55.16'	S51°21'01"E

ISLAND CURVE TABLE

ID	DELTA	TANGENT	ARC	RADIUS	CHORD LENGTH	CHORD BEARING
C61	180°00'00"	-----	10.21'	3.25'	6.50'	S06°54'11"W
C62	04°09'48"	10.10'	20.20'	278.00'	20.20'	S85°10'43"E
C63	129°41'43"	3.19'	3.40'	1.50'	2.72'	N27°53'32"E
C64	48°42'31"	4.30'	8.08'	9.50'	7.84'	N58°44'33"W
C65	57°25'16"	8.22'	15.03'	15.00'	14.41'	S69°38'20"W
C66	122°34'44"	3.65'	4.28'	2.00'	3.51'	S20°21'40"E
C67	122°34'44"	3.65'	4.28'	2.00'	3.51'	N37°03'35"E
C68	57°25'16"	8.22'	15.03'	15.00'	14.41'	N52°56'25"W
C69	57°25'16"	8.22'	15.03'	15.00'	14.41'	S69°38'20"W
C70	122°34'44"	3.65'	4.28'	2.00'	3.51'	S20°21'40"E
C71	122°34'44"	3.65'	4.28'	2.00'	3.51'	N37°03'35"E
C72	57°25'16"	8.22'	15.03'	15.00'	14.41'	N52°56'25"W
C73	90°00'00"	2.00'	3.14'	2.00'	2.83'	S53°20'57"W
C74	90°00'00"	2.00'	3.14'	2.00'	2.83'	S43°47'53"E
C75	90°00'00"	2.00'	3.14'	2.00'	2.83'	N46°12'07"E
C76	90°00'33"	2.00'	3.14'	2.00'	2.83'	N36°38'46"W
C77	90°00'00"	2.00'	3.14'	2.00'	2.83'	S53°20'57"W
C78	90°00'00"	2.00'	3.14'	2.00'	2.83'	S43°47'53"E
C79	90°00'00"	2.00'	3.14'	2.00'	2.83'	N46°12'07"E
C80	90°00'00"	2.00'	3.14'	2.00'	2.83'	N36°39'03"W
C81	122°34'44"	3.65'	4.28'	2.00'	3.51'	S29°54'45"W
C82	57°25'16"	8.22'	15.03'	15.00'	14.41'	S60°05'15"E
C83	57°25'16"	8.22'	15.03'	15.00'	14.41'	N62°29'29"E
C84	122°34'44"	3.65'	4.28'	2.00'	3.51'	N27°30'31"W
C85	122°34'44"	3.65'	4.28'	2.00'	3.51'	S29°54'45"W
C86	57°25'16"	8.22'	15.03'	15.00'	14.41'	S60°05'15"E
C87	57°25'16"	8.22'	15.03'	15.00'	14.41'	N62°29'29"E
C88	122°34'44"	3.65'	4.28'	2.00'	3.51'	N27°30'31"W

P:\080024\FPE\Design\Sheets\080024-Site Layout-C3.dwg
Fri, 9-Nov-2007 - 11:41:am, Plotted by: RGIBSON

Point Table

⬭	NORTHING	EASTING	ELEVATION
1	1531403.65	1518405.17	5062.74
2	1531236.27	1518380.60	5063.59
3	1531218.25	1518379.10	5063.67
4	1531110.76	1518376.84	5062.87
5	1531029.48	1518448.89	5061.18
6	1531021.61	1518527.89	5060.45
7	1531090.46	1518615.10	5059.84
8	1531290.89	1518642.30	5059.33
9	1531380.80	1518574.64	5060.78
10	1531438.38	1517940.96	-----
11	1531415.12	1518133.14	5076.62
12	1531413.61	1518242.14	5070.24
13	1531410.54	1518358.23	5063.89
14	1531378.82	1518574.35	5060.74
15	1531374.84	1518449.96	5062.35
16	1531377.64	1518452.07	5062.49
17	1531386.33	1518440.57	5062.17
18	1531389.02	1518422.22	5062.28
19	1531384.80	1518416.55	5062.55
20	1531234.23	1518394.45	5063.31
21	1531217.96	1518393.09	5063.39
22	1531110.16	1518390.83	5062.59
23	1531039.03	1518453.87	5060.92
24	1531031.56	1518528.88	5060.25
25	1531091.80	1518605.19	5059.64
26	1531114.22	1518608.23	5059.52
27	1531122.06	1518608.26	5059.46
28	1531129.55	1518607.30	5059.40
29	1531137.38	1518607.34	5059.33
30	1531270.15	1518625.35	5058.90
31	1531277.71	1518627.41	5058.98
32	1531284.68	1518630.33	5059.06
33	1531292.23	1518632.39	5059.14
34	1531353.24	1518610.33	5060.01
35	1531350.28	1518602.00	5060.50
36	1531337.64	1518600.15	5060.01
37	1531335.37	1518601.84	5059.89
38	1531332.75	1518619.65	5059.20
39	1531215.02	1518602.37	5059.20
40	1531217.63	1518584.56	5059.38
41	1531215.94	1518582.29	5059.42
42	1531210.08	1518581.43	5059.43
43	1531203.81	1518581.30	5059.41
44	1531201.77	1518583.25	5059.38
45	1531201.39	1518601.25	5059.20
46	1531090.92	1518598.93	5059.20
47	1531091.25	1518582.95	5059.42
48	1531089.22	1518580.91	5059.46
49	1531049.62	1518541.10	5060.33
50	1531051.26	1518463.02	5061.40
51	1531076.27	1518427.43	5062.04
52	1531077.55	1518425.61	5062.07
53	1531077.95	1518406.62	5062.33
54	1531209.92	1518409.39	5063.41
55	1531209.54	1518427.38	5063.05
56	1531211.50	1518429.42	5063.07
57	1531216.51	1518429.53	5063.09
58	1531228.93	1518430.57	5063.09
59	1531233.56	1518431.25	5063.07
60	1531235.83	1518429.56	5063.05
61	1531238.44	1518411.75	5063.41
62	1531377.45	1518432.15	5062.57
63	1531318.43	1518483.12	5061.65
64	1531316.98	1518493.01	5061.60
65	1531283.34	1518488.08	5061.60
66	1531284.79	1518478.18	5061.65
67	1531491.08	1517958.79	-----
68	1531477.94	1517957.53	5085.07
69	1531445.29	1517983.78	5084.44
70	1531427.03	1518134.58	5076.38
71	1531425.56	1518241.02	5070.01
72	1531422.41	1518359.97	5063.72
73	1531390.69	1518576.09	5060.98
74	1531289.54	1518652.21	5059.53
75	1531089.11	1518625.00	5060.04
76	1531011.66	1518526.90	5060.65
77	1531019.53	1518447.90	5061.38
78	1531070.10	1518375.71	5062.58
79	1531099.75	1518359.75	5063.07
80	1531139.14	1518366.69	5063.49
81	1531151.14	1518366.69	5063.64
82	1531180.20	1518358.90	5064.09
83	1531219.13	1518368.11	5063.89
84	1531237.06	1518369.61	5063.80
85	1531271.87	1518366.13	5063.80
86	1531329.40	1518384.16	5063.32
87	1531353.65	1518387.72	5063.20
88	1531399.06	1518353.72	5063.77
89	1531402.43	1518322.23	5065.28
90	1531401.23	1518297.81	5066.72
91	1531387.11	1518216.50	5071.57
92	1531380.50	1518158.51	5075.00
93	1531366.50	1518149.90	5077.33
94	1531362.49	1518151.66	5077.85
95	1531307.68	1518556.33	5060.48
96	1531309.13	1518546.44	5060.53
97	1531275.49	1518541.50	5060.53
98	1531274.04	1518551.40	5060.48
99	1531126.36	1518530.66	5060.62
100	1531126.15	1518540.66	5060.57
101	1531160.14	1518541.37	5060.57
102	1531160.35	1518531.37	5060.62
103	1531127.70	1518466.67	5061.88
104	1531161.69	1518467.39	5061.88
105	1531161.48	1518477.38	5061.83
106	1531127.49	1518476.67	5061.83
107	1531073.91	1518527.51	5060.31
108	1531073.62	1518541.60	5060.10
109	1531083.39	1518552.76	5059.90
110	1531084.14	1518516.77	5060.53
111	1531075.26	1518463.53	5061.43
112	1531074.96	1518477.62	5061.22
113	1531084.73	1518488.78	5061.02
114	1531085.48	1518452.78	5061.65
115	1531220.75	1518453.62	5062.52
116	1531206.50	1518453.32	5062.34
117	1531234.53	1518455.64	5062.34
118	1531230.99	1518493.53	5061.61
119	1531236.22	1518457.91	5062.28
120	1531217.42	1518493.56	5061.56
121	1531228.72	1518495.22	5061.59
122	1531205.66	1518493.31	5061.60
123	1531204.46	1518455.28	5062.28
124	1531203.70	1518491.27	5061.61
125	1531215.41	1518517.52	5060.98
126	1531205.16	1518517.31	5060.83
127	1531225.23	1518518.97	5060.86
128	1531221.70	1518556.85	5060.05
129	1531226.92	1518521.24	5060.79
130	1531212.08	1518557.46	5060.01
131	1531219.43	1518558.54	5060.03
132	1531204.32	1518557.30	5060.03
133	1531203.11	1518519.27	5060.79
134	1531202.36	1518555.26	5060.05
135	1531367.74	1518567.22	5060.56
136	1531369.78	1518553.27	5060.73
137	1531361.48	1518540.98	5061.25
138	1531356.25	1518576.60	5060.82
139	1531377.03	1518503.89	5061.31
140	1531379.08	1518489.95	5061.48
141	1531370.77	1518477.66	5062.02
142	1531365.55	1518513.28	5061.59
143	1531415.57	1517972.71	5084.87
144	1531402.14	1518083.60	5079.66
145	1531406.91	1518098.31	5078.84
146	1531422.02	1517973.49	5084.87
147	1531080.27	1518554.38	5059.88
148	1531081.10	1518515.02	5060.53
149	1531081.62	1518490.40	5061.00
150	1531082.44	1518451.03	5061.65
151	1531364.77	1518539.76	5061.26
152	1531359.05	1518578.72	5060.79
153	1531374.06	1518476.44	5062.01
154	1531368.35	1518515.39	5061.67
155	1531402.85	1518105.01	5078.52
156	1531400.45	1518103.74	5078.60
157	1531402.14	1518083.61	5079.66
158	1531426.90	1518368.15	5064.69
159	1531436.79	1518369.60	5064.69
160	1531425.73	1518376.07	5064.49
161	1531435.63	1518377.52	5064.49
162	1531397.79	1518727.66	5058.19
163	1531352.30	1518709.68	5059.04
164	1531320.35	1518667.08	5059.99
165	1531314.37	1518667.77	5060.03
166	1531349.51	1518715.00	5059.02
167	1531396.20	1518733.44	-----
168	1531476.79	1517969.47	5084.43
169	1531457.20	1517985.23	5083.76
170	1531455.50	1518020.68	5082.92
171	1531453.06	1518049.59	5082.23
172	1531442.54	1518136.46	5077.85
173	1531441.12	1518239.58	5072.37
174	1531437.87	1518362.24	5065.13
175	1531406.15	1518578.36	5059.49
176	1531287.64	1518667.72	5060.17
177	1531085.79	1518648.26	5058.71
178	1531029.88	1518630.38	5058.28
179	1531440.93	1518024.98	5083.51
180	1531441.92	1518025.10	5083.44
181	1531445.41	1518029.55	5082.97
182	1531432.61	1518135.26	5077.71
183	1531431.16	1518240.50	5072.27
184	1531427.98	1518360.79	5065.13
185	1531396.26	1518576.91	5059.11
186	1531288.79	1518657.78	5060.00
187	1531086.75	1518638.31	5059.19
188	1531034.66	1518621.60	5058.96
189	1531429.56	1518171.16	5076.36
190	1531439.55	1518171.74	5076.38
191	1531430.14	1518161.18	5076.56
192	1531440.12	1518161.75	5076.58
193	1531046.86	1518354.99	5062.20
194	1531012.41	1518398.07	5061.65
195	1531070.07	1518355.90	5062.61
196	1531018.29	1518418.97	5060.93
197	1531007.88	1518330.61	-----
198	1531010.36	1518320.23	-----
199	1531070.07	1518347.90	5062.77
200	1531363.55	1518578.29	5060.42
201	1531355.64	1518603.49	5060.10
202	1531375.87	1518511.81	5061.22
203	1531370.95	1518545.36	5060.82
204	1531385.16	1518448.49	5061.97
205	1531380.24	1518482.04	5061.57
206	1531380.44	1518152.30	5075.33
207	1531379.87	1518099.77	5078.16
208	1531426.82	1518437.47	5063.00
209	1531427.72	1518431.54	5063.13
210	1531445.49	1518440.21	5062.53
211	1531446.36	1518434.28	5062.53
212	1531010.63	1518615.16	-----
213	1531003.91	1518620.31	-----

CONTROL POINT TABLE

△	EASTING	NORTHING
1	1518121.34	1531033.20
2	1518589.79	1531000.98
3	1517968.99	1531490.91

ACCESS ROAD CURVE TABLE

ID	DELTA	TANGENT	ARC	RADIUS	CHORD LENGTH	CHORD BEARING
C1	12°13'17"	54.81'	109.21'	512.00'	109.01'	S89°12'28"E
C2	13°40'04"	58.48'	116.41'	488.00'	116.14'	S88°29'05"E

ACCESS ROAD TANGENT

ID	BEARING	LENGTH
T1	S83°05'49"E	193.59'
T2	S81°39'03"E	218.43'

BUS LOOP CURVE TABLE

ID	DELTA	TANGENT	ARC	RADIUS	CHORD LENGTH	CHORD BEARING
C3	07°08'50"	9.06'	18.09'	145.00'	18.08'	S04°46'32"W
C4	85°30'39"	73.97'	119.40'	80.00'	108.62'	S41°33'13"E
C5	87°57'45"	77.20'	122.82'	80.00'	111.11'	N51°42'36"E
C6	89°22'46"	79.14'	124.80'	80.00'	112.52'	N36°57'40"W

BUS LOOP TANGENT

ID	BEARING	LENGTH
T3	S08°20'57"W	169.18'
T4	S01°12'07"W	107.51'
T5	S84°18'32"E	79.39'
T6	N07°43'43"E	202.27'

BHI JOB NO. 080024

NOTES

1. THE CONTRACTOR SHALL FIELD VERIFY ALL EXISTING UTILITY LOCATIONS AND NOTIFY THE ENGINEER IMMEDIATELY OF ANY DISCREPANCIES.

2. ALL CURVE DATA AND DIMENSIONS REFER TO FACE OF CURB UNLESS OTHERWISE SPECIFIED.

3. GRADE ELEVATIONS, WHERE NOTED, ARE FOR FLOWLINE OF CURB UNLESS OTHERWISE SPECIFIED.

4. CONTRACTOR IS RESPONSIBLE FOR REPAIR AND/OR REPLACEMENT OF ALL UTILITY CONDUITS AND EXISTING LINES.

5. ANY ADDITIONAL GRADING REQUIRED TO MATCH PROPOSED STREET GRADES SHALL BE INCIDENTAL TO PAVING ITEMS.

6. CONTRACTOR SHALL PARK EQUIPMENT AND VEHICLES AS NOT TO INTERFERE WITH NORMAL ACTIVITIES OF RESIDENTS OR OTHER CONTRACTORS ON SITE.

7. ANY DAMAGE TO THE EXISTING FACILITIES (CURB & GUTTER, PAVEMENT, CONDUITS, LANDSCAPING, UTILITY LINES ETC.) DURING CONSTRUCTION SHALL BE REPLACED AT THE CONTRACTORS' EXPENSE.

8. REMOVAL OF THE EXISTING CURB & GUTTER SHALL BE PER COA STD. DWG. 2415 (SAWCUT ONLY).

9. WHEELCHAIR RAMPS SHALL BE CONSTRUCTED PRIOR TO ACCEPTANCE OF CURB & GUTTER.

AS-BUILT INFORMATION

CONTRACTOR — DATE
WORK STAKED BY — DATE
INSPECTOR'S ACCEPTANCE BY — DATE
FIELD VERIFICATION BY — DATE
DRAWINGS CORRECTED BY — DATE

MICRO-FILM INFORMATION

RECORDED BY — DATE
NO. — DATE

BENCH MARKS

△	EASTING	NORTHING
1	1518121.34	1531033.20
2	1518589.79	1531000.98
3	1517968.99	1531490.91

SURVEY INFORMATION

FIELD NOTES

NO.	BY	DATE

ENGINEER'S SEAL

JAMES V. FAINT (?) — NEW MEXICO — 14233 — REGISTERED PROFESSIONAL ENGINEER — 11-13-07

NO.	DATE	REMARKS	BY
		REVISIONS	
		DESIGN	

DESIGNED BY RGG DATE 07/2007
DRAWN BY RGG DATE 07/2007
CHECKED BY JF DATE 07/2007

Bohannan ▲ Huston Inc.

Courtyard I 7500 Jefferson St. NE Albuquerque, NM 87109-4335

ENGINEERING ▲ SPATIAL DATA ▲ ADVANCED TECHNOLOGIES

CITY OF ALBUQUERQUE
DEPARTMENT OF MUNICIPAL DEVELOPMENT

7 BAR LOOP PARK & RIDE
HORIZONTAL & LAYOUT

DESIGN REVIEW COMMITTEE	CITY ENGINEER APPROVAL		MO./DAY/YR.	MO./DAY/YR.
APPROVED DEC 2 4 2007 DESIGN REVIEW COMMITTEE	APPROVED DEC 2 4 2007 CITY ENGINEER	LAST DESIGN UPDATE		

CITY PROJECT NO.	ZONE MAP NO.	SHEET	OF
6065.01	A – 13	C3	C8

ACCESS ROAD CURVE TABLE							
ID	DELTA	TANGENT	ARC	RADIUS	CHORD LENGTH	CHORD BEARING
C1	12°13'17"	54.81'	109.21'	512.00'	109.01'	S89°12'28"E
C2	13°40'04"	58.48'	116.41'	488.00'	116.14'	S88°29'05"E

ACCESS ROAD TANGENT		
ID	BEARING	LENGTH
T1	S83°05'49"E	193.59'
T2	S81°39'03"E	218.43'

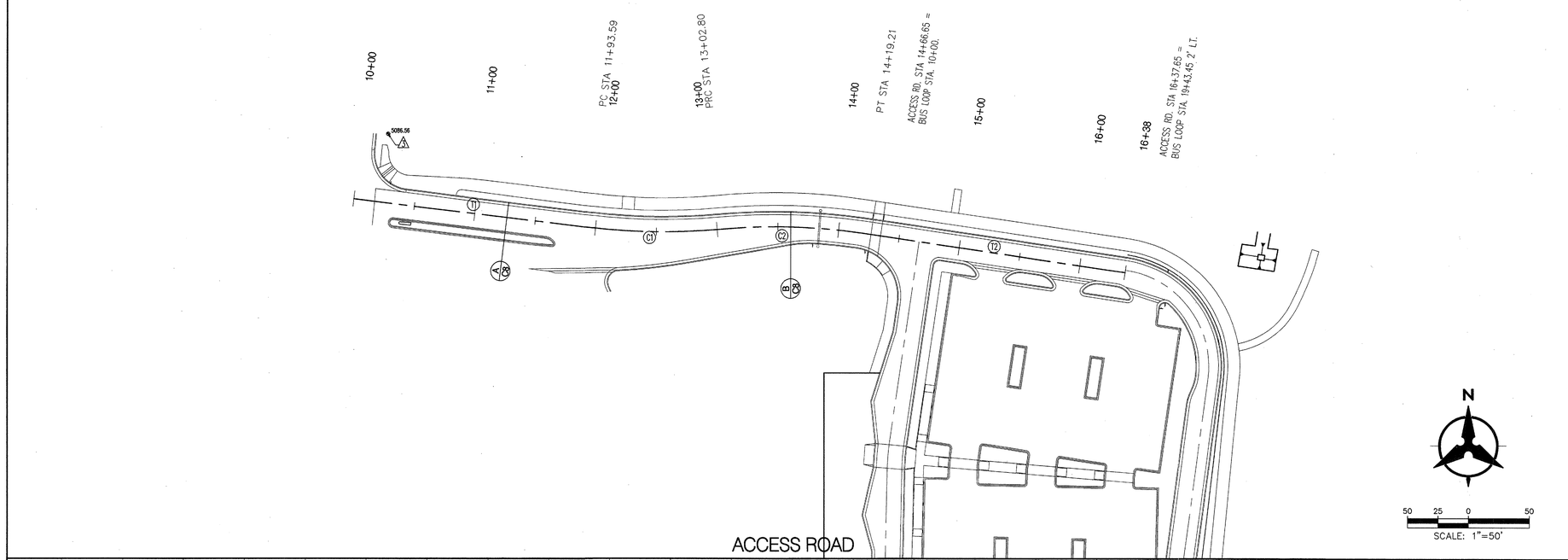

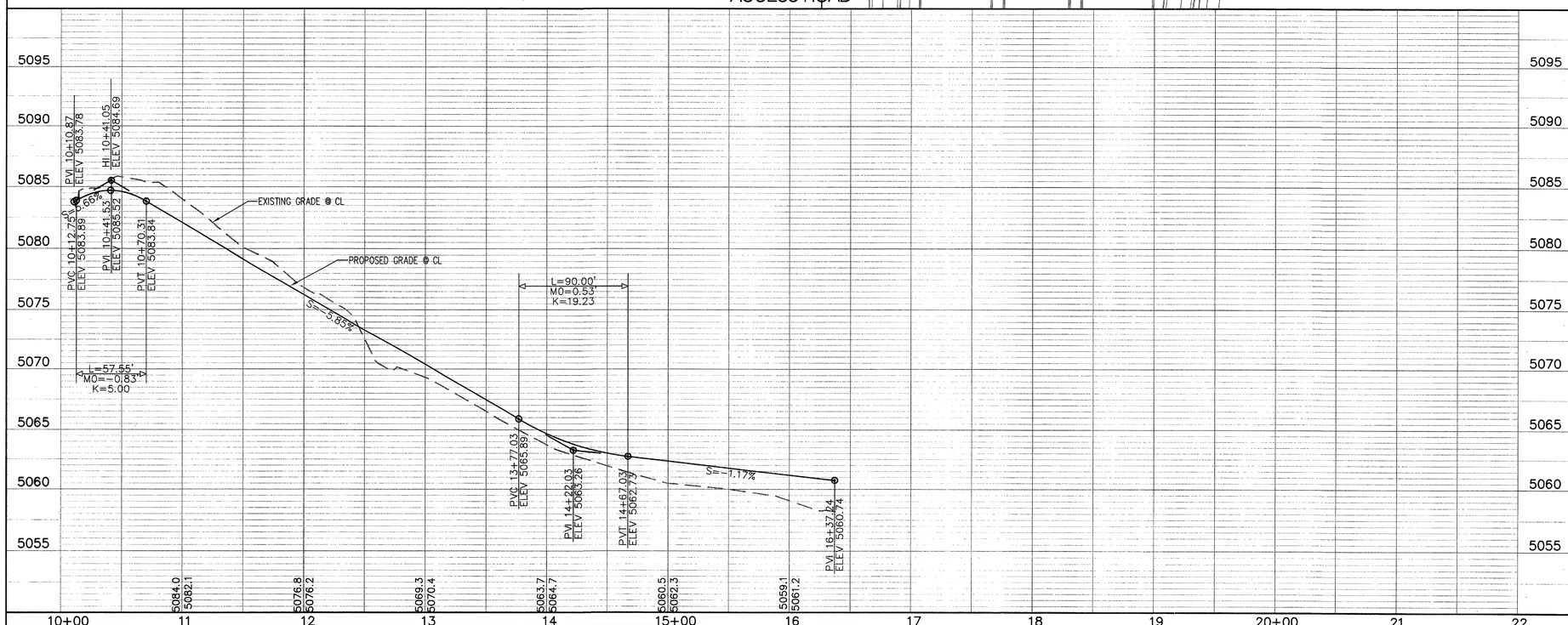

NOTES

1. THE CONTRACTOR SHALL FIELD VERIFY ALL EXISTING UTILITY LOCATIONS AND NOTIFY THE ENGINEER IMMEDIATELY OF ANY DISCREPANCIES.

2. ALL CURVE DATA AND DIMENSIONS REFER TO FACE OF CURB UNLESS OTHERWISE SPECIFIED.

3. GRADE ELEVATIONS, WHERE NOTED, ARE FOR FLOWLINE OF CURB UNLESS OTHERWISE SPECIFIED.

4. CONTRACTOR IS RESPONSIBLE FOR REPAIR AND/OR REPLACEMENT OF ALL UTILITY CONDUITS AND EXISTING LINES.

5. ANY ADDITIONAL GRADING REQUIRED TO MATCH PROPOSED STREET GRADES SHALL BE INCIDENTAL TO PAVING ITEMS.

6. CONTRACTOR SHALL PARK EQUIPMENT AND VEHICLES AS NOT TO INTERFERE WITH NORMAL ACTIVITIES OF RESIDENTS OR OTHER CONTRACTORS ON SITE.

7. ANY DAMAGE TO THE EXISTING FACILITIES (CURB & GUTTER, PAVEMENT, CONDUITS, LANDSCAPING, UTILITY LINES ETC.) DURING CONSTRUCTION SHALL BE REPLACED AT THE CONTRACTORS' EXPENSE.

8. REMOVAL OF THE EXISTING CURB & GUTTER SHALL BE PER COA STD. DWG. 2415 (SAWCUT ONLY).

9. WHEELCHAIR RAMPS SHALL BE CONSTRUCTED PRIOR TO ACCEPTANCE OF CURB & GUTTER.

AS-BUILT INFORMATION

CONTRACTOR	DATE
WORK STAKED BY	DATE
INSPECTOR ACCEPTANCE BY	DATE
FIELD VERIFICATION BY	DATE
DRAWINGS CORRECTED BY	DATE

MICRO-FILM INFORMATION

RECORDED BY	DATE
NO.	DATE

BENCH MARKS

△	EASTING	NORTHING
1	1518121.34	1531033.20
2	1518583.79	1531000.98
3	1517968.99	1531490.91

SURVEY INFORMATION

FIELD NOTES

NO.	BY	DATE

ENGINEER'S SEAL

JAMES V. ALARID
NEW MEXICO
4233
REGISTERED PROFESSIONAL ENGINEER

NO.	DATE	REMARKS	BY
		REVISIONS	
		DESIGN	

DESIGNED BY RGG DATE 07/2007
DRAWN BY RGG DATE 07/2007
CHECKED BY JF DATE 07/2007

Bohannan ▲ Huston

Courtyard I 7500 Jefferson St. NE Albuquerque, NM 87109-4335

ENGINEERING ▲ SPATIAL DATA ▲ ADVANCED TECHNOLOGIES

CITY OF ALBUQUERQUE
DEPARTMENT OF MUNICIPAL DEVELOPMENT

7 BAR LOOP PARK & RIDE
ACCESS ROAD PLAN AND PROFILE
STA: 10+00 - 16+37.65

DESIGN REVIEW COMMITTEE	CITY ENGINEER APPROVAL	LAST DESIGN UPDATE	MO./DAY/YR.	MO./DAY/YR.
APPROVED DEC 24 2007 CITY ENGINEER	APPROVED DEC 24 2007 DESIGN REVIEW COMMITTEE			

CITY PROJECT NO.	ZONE MAP NO.	SHEET	OF
6065.01	A – 13	C4	C8

SCALE: 1" = 50'
1" = 5'

BHI JOB NO. 080024

P:\080024\FPE\Design\Sheets\080024-PPNP-C4.dwg
Fri, 9-Nov-2007 - 11:41:am, Plotted by: RGIBSON

BUS LOOP CURVE TABLE						
ID	DELTA	TANGENT	ARC	RADIUS	CHORD LENGTH	CHORD BEARING
C3	07°08'50"	9.06'	18.09'	145.00'	18.08'	S04°46'32"W
C4	85°30'39"	73.97'	119.40'	80.00'	108.62'	S41°33'13"E
C5	87°57'45"	77.20'	122.82'	80.00'	111.11'	N51°42'36"E
C6	89°22'46"	79.14'	124.80'	80.00'	112.52'	N36°57'40"W

BUS LOOP TANGENT		
ID	BEARING	LENGTH
T3	S08°20'57"W	169.18'
T4	S01°12'07"W	107.51'
T5	S84°18'32"E	79.39'
T6	N07°43'43"E	202.27'

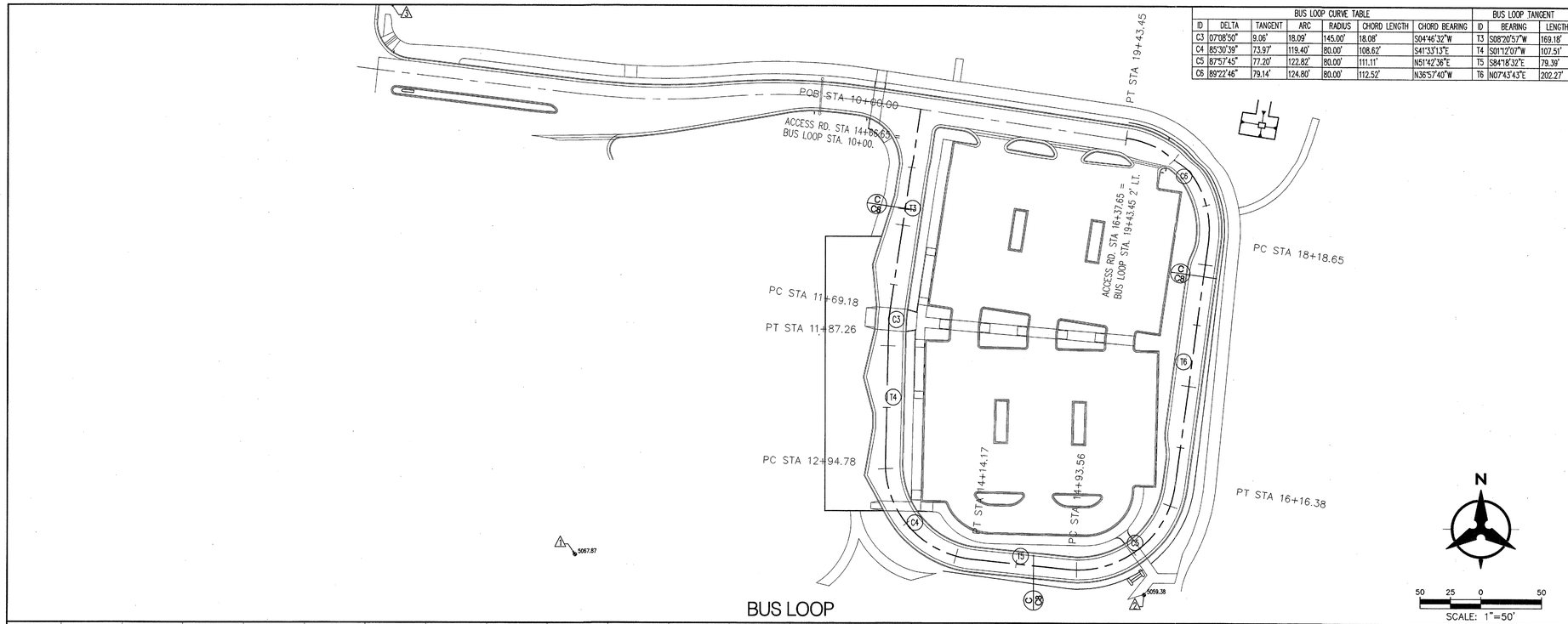

BUS LOOP

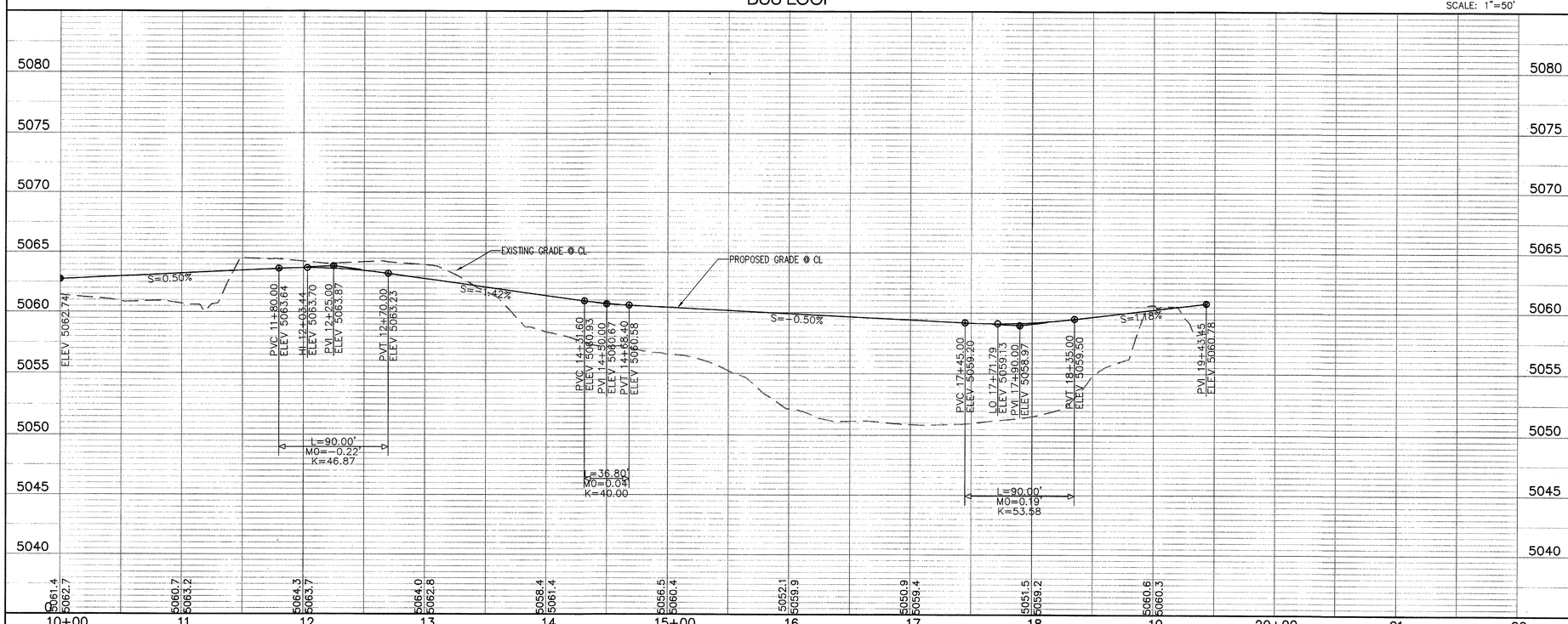

NOTES

1. THE CONTRACTOR SHALL FIELD VERIFY ALL EXISTING UTILITY LOCATIONS AND NOTIFY THE ENGINEER IMMEDIATELY OF ANY DISCREPANCES.

2. ALL CURVE DATA AND DIMENSIONS REFER TO FACE OF CURB UNLESS OTHERWISE SPECIFIED.

3. GRADE ELEVATIONS, WHERE NOTED, ARE FOR FLOWLINE OF CURB UNLESS OTHERWISE SPECIFIED.

4. CONTRACTOR IS RESPONSIBLE FOR REPAIR AND/OR REPLACEMENT OF ALL UTILITY CONDUITS AND EXISTING LINES.

5. ANY ADDITIONAL GRADING REQUIRED TO MATCH PROPOSED STREET GRADES SHALL BE INCIDENTAL TO PAVING ITEMS.

6. CONTRACTOR SHALL PARK EQUIPMENT AND VEHICLES AS NOT TO INTERFERE WITH NORMAL ACTIVITIES OF RESIDENTS OR OTHER CONTRACTORS ON SITE.

7. ANY DAMAGE TO THE EXISTING FACILITIES (CURB & GUTTER, PAVEMENT, CONDUITS, LANDSCAPING, UTILITY LINES ETC.) DURING CONSTRUCTION SHALL BE REPLACED AT THE CONTRACTORS' EXPENSE.

8. REMOVAL OF THE EXISTING CURB & GUTTER SHALL BE PER COA STD. DWG. 2415 (SAWCUT ONLY).

9. WHEELCHAIR RAMPS SHALL BE CONSTRUCTED PRIOR TO ACCEPTANCE OF CURB & GUTTER.

AS-BUILT INFORMATION

CONTRACTOR	DATE
WORK STAKED BY	DATE
INSPECTOR ACCEPTANCE BY	DATE
FIELD VERIFICATION BY	DATE
DRAWINGS CORRECTED BY	DATE

MICRO-FILM INFORMATION

RECORDED BY	DATE
NO.	DATE

BENCH MARKS

△	EASTING	NORTHING
1	1518121.34	1531033.20
2	1518588.79	1531000.98
3	1517968.99	1531480.91

SURVEY INFORMATION

FIELD NOTES

NO.	BY	DATE

ENGINEER'S SEAL

JAMES V. TAFOYA NEW MEXICO 14233 PROFESSIONAL ENGINEER

NO.	DATE	REMARKS	BY
		REVISIONS	
		DESIGN	

DESIGNED BY	RGG	DATE 07/2007
DRAWN BY	RGG	DATE 07/2007
CHECKED BY	JF	DATE 07/2007

Bohannan ▲ Huston

Courtyard I 7500 Jefferson St. NE Albuquerque, NM 87109-4335

ENGINEERING ▲ SPATIAL DATA ▲ ADVANCED TECHNOLOGIES

CITY OF ALBUQUERQUE
DEPARTMENT OF MUNICIPAL DEVELOPMENT

7 BAR LOOP PARK & RIDE
BUS LOOP PLAN & PROFILE
STA: 10+00 - 19+48.16

DESIGN REVIEW COMMITTEE	CITY ENGINEER APPROVAL	LAST DESIGN UPDATE	MO./DAY/YR.	MO./DAY/YR.
APPROVE DEC 24 2007 DESIGN REVIEW COMMITTEE	APPROVE DEC 24 2007 CITY ENGINEER			

CITY PROJECT NO.	ZONE MAP NO.	SHEET	OF
6065.01	A – 13	C5	C8

SCALE: 1" = 50'
1" = 5'

BHI JOB NO. 080024

P:\080024\FPE\Design\Sheets\080024-PPNP-C5.dwg
Fri, 9-Nov-2007 - 11:42:am, Plotted by: RGIBSON

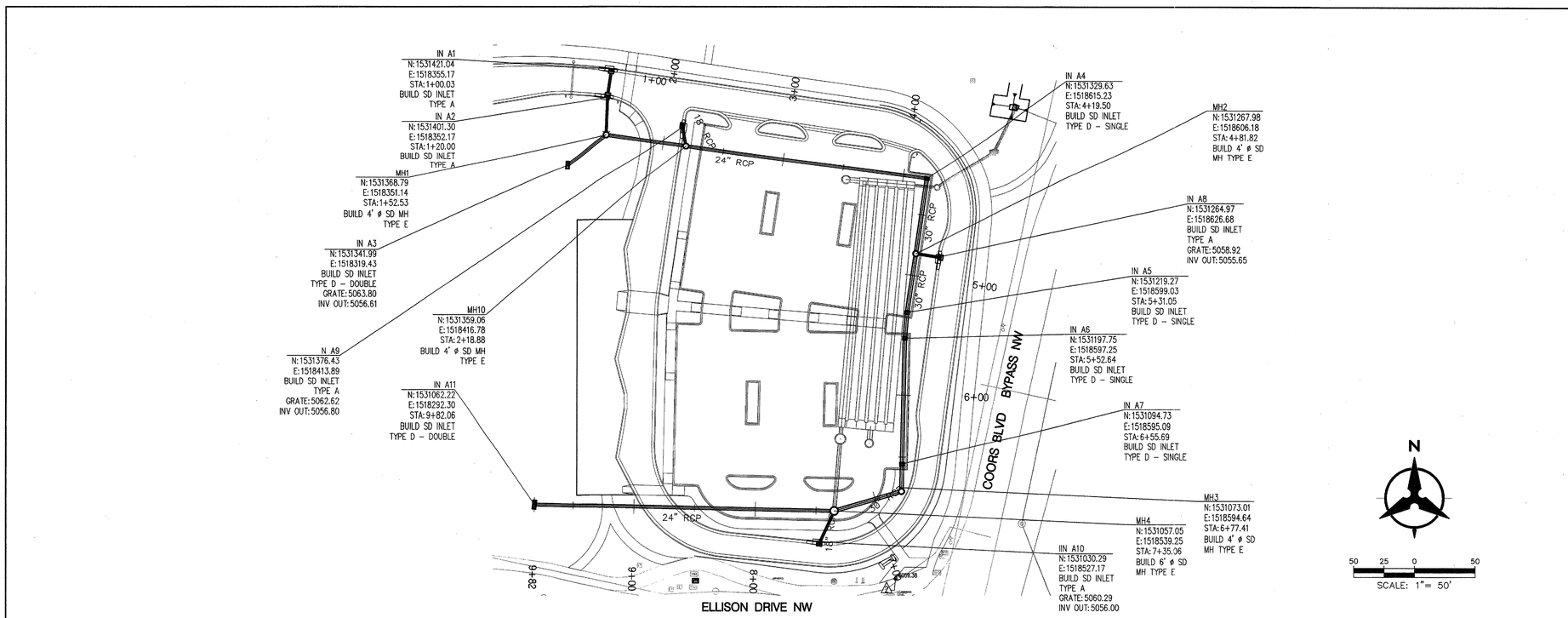

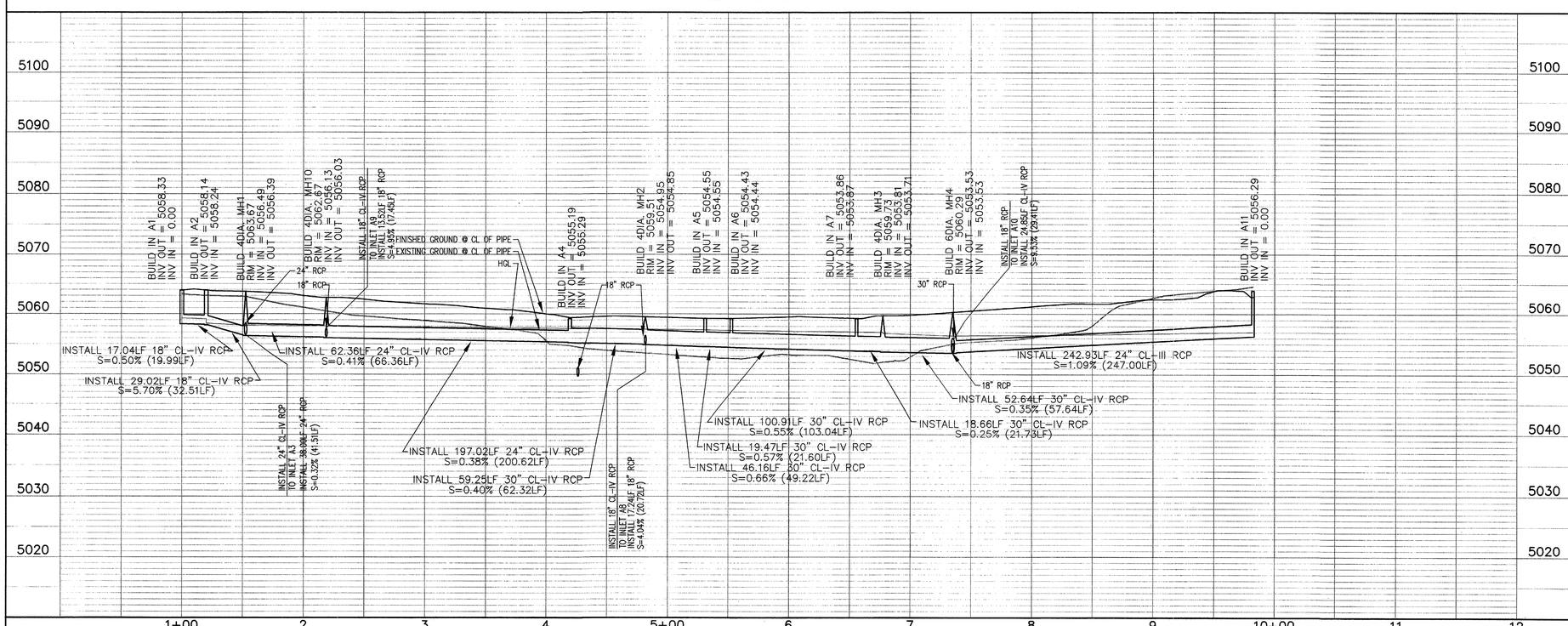

GENERAL NOTES

1. THE CONTRACTOR SHALL FIELD VERIFY ALL EXISTING UTILITY LOCATIONS AND NOTIFY THE ENGINEER IMMEDIATELY OF ANY DISCREPANCIES.
2. ALL CURVE DATA AND DIMENSIONS ARE CALCULATED FROM CENTERLINE OF PIPE OR MANHOLE. ALL SAS & SD SLOPES ARE CALCULATED TO TRUE PIPE DIMENSIONS FROM INVERT TO INVERT.
3. CONTRACTOR IS RESPONSIBLE FOR REPAIR AND/OR REPLACE-MENT OF ALL UTILITY CONDUITS AND EXISTING LINES.
4. CONTRACTOR SHALL PARK EQUIPMENT AND VEHICLES AS NOT TO INTERFERE WITH NORMAL ACTIVITIES OF RESIDENTS OR OTHER CONTRACTORS ON SITE.
5. ANY DAMAGE TO THE EXISTING FACILITIES (CURB & GUTTER, PAVEMENT, CONDUITS, LANDSCAPING, UTILITY LINES, ETC.) DURING CONSTRUCTION SHALL BE REPLACED AT THE CONTRACTORS' EXPENSE.
6. MANHOLE RIMS AND CATCH BASIN INLET ELEVATIONS ARE APPROXIMATE.
7. MANHOLES SHALL BE TYPE "E" BUILT PER COA STD DRAWINGS 2102.
8. FOR RCP STORM DRAIN CONSTRUCTION: ALL RCP JOINTS SHALL NOT BE GROUTED PRIOR TO FINAL INSPECTION. FINAL INSPECTION SHALL DETERMINE WHICH JOINTS ARE TO BE GROUTED FOR FINAL ACCEPTANCE OF THE CONSTRUCTION.
9. ALL EXCAVATION, TRENCHING AND SHORING ACTIVITIES MUST BE CARRIED-OUT IN ACCORDANCE WITH OSHA 29 CFR 1926.650 SUBPART P.
10. AREA STORM DRAIN INLETS SHALL BE EITHER SINGLE TYPE "D" INLETS BUILT PER COA STD DRAWING 2206.
11. CURB INLETS SHALL BE EITHER TYPE "A" INLET BUILT PER COA STD DRAWING 2201.
12. INLET GRATES SHALL BE BUILT PER COA STD. DRAWING 2220.
13. LOCATION DATA FOR MANHOLES AND INLETS IS CENTER OF STRUCTURE UNLESS NOTED OTHERWISE.

AS-BUILT INFORMATION

	DATE
CONTRACTOR	
WORK STAKED BY	
INSPECTED BY	
ACCEPTANCE BY	
FIELD VERIFICATION BY	
DRAWINGS CORRECTED BY	

MICRO-FILM INFORMATION

	DATE
RECORDED BY	
NO.	

BENCH MARKS

	EASTING	NORTHING
1	1518121.34	1531033.20
2	1518588.79	1531000.98
3	1517868.99	1531490.91

SURVEY INFORMATION
FIELD NOTES

NO.	BY	DATE

ENGINEER'S SEAL

JAMES A.V. RIVERA
NEW MEXICO
14233
PROFESSIONAL ENGINEER
11-13-07

NO.	DATE	REMARKS	BY
		REVISIONS	
		DESIGN	

DESIGNED BY ME DATE 07/2007
DRAWN BY ME/RGG DATE 07/2007
CHECKED BY JF DATE 07/2007

Bohannan ▲ Huston
Courtyard I 7500 Jefferson St. NE Albuquerque, NM 87109-4335
ENGINEERING ▲ SPATIAL DATA ▲ ADVANCED TECHNOLOGIES

CITY OF ALBUQUERQUE
DEPARTMENT OF MUNICIPAL DEVELOPMENT

7 BAR LOOP PARK & RIDE
STORM DRAIN PLAN AND PROFILE
STA: 1+00 - 9+75

DESIGN REVIEW COMMITTEE	CITY ENGINEER APPROVAL	LAST DESIGN UPDATE	MO./DAY/YR.	MO./DAY/YR.
APPROVED DEC 24 2007 DESIGN REVIEW COMMITTEE	APPROVED DEC 24 2007 CITY ENGINEER			

CITY PROJECT NO.	ZONE MAP NO.	SHEET	OF
6065.01	A – 13	C6	C8

SCALE: 1" = 50'
1" = 5'
BHI JOB NO. 080024

P:\080024\FPE\Design\Sheets\080024-UPNP-C6.dwg
Fri, 9-Nov-2007 – 11:42:am, Plotted by: RGIBSON

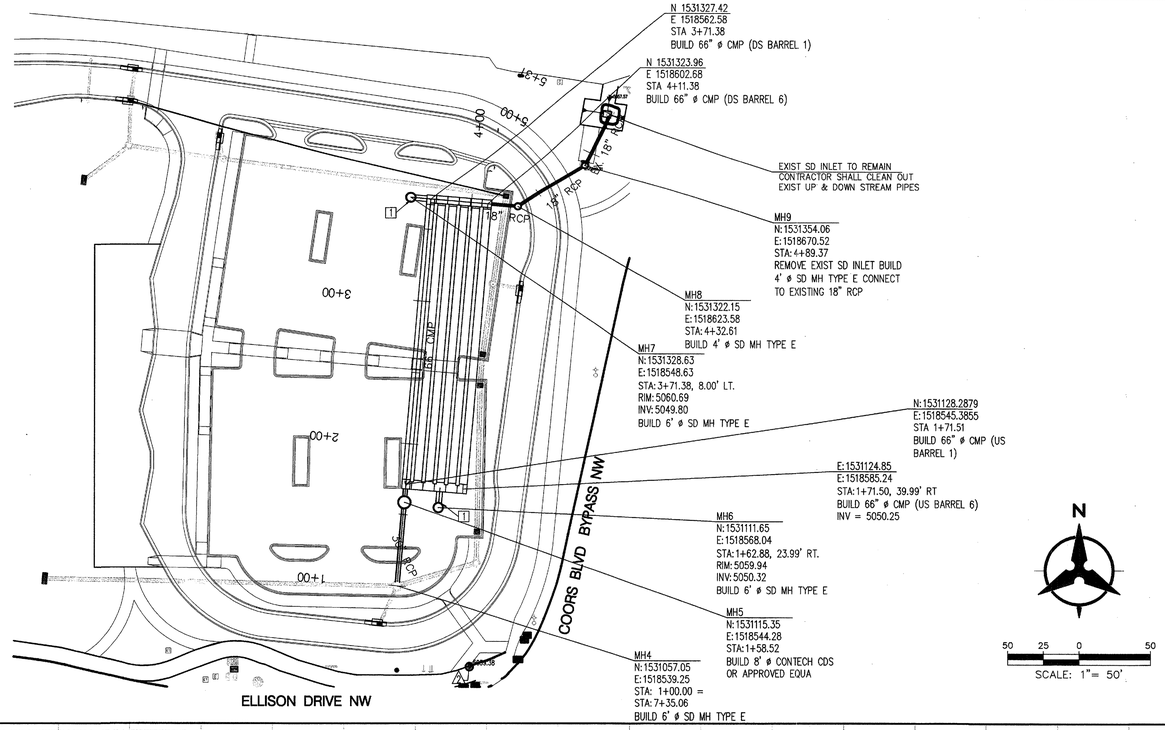

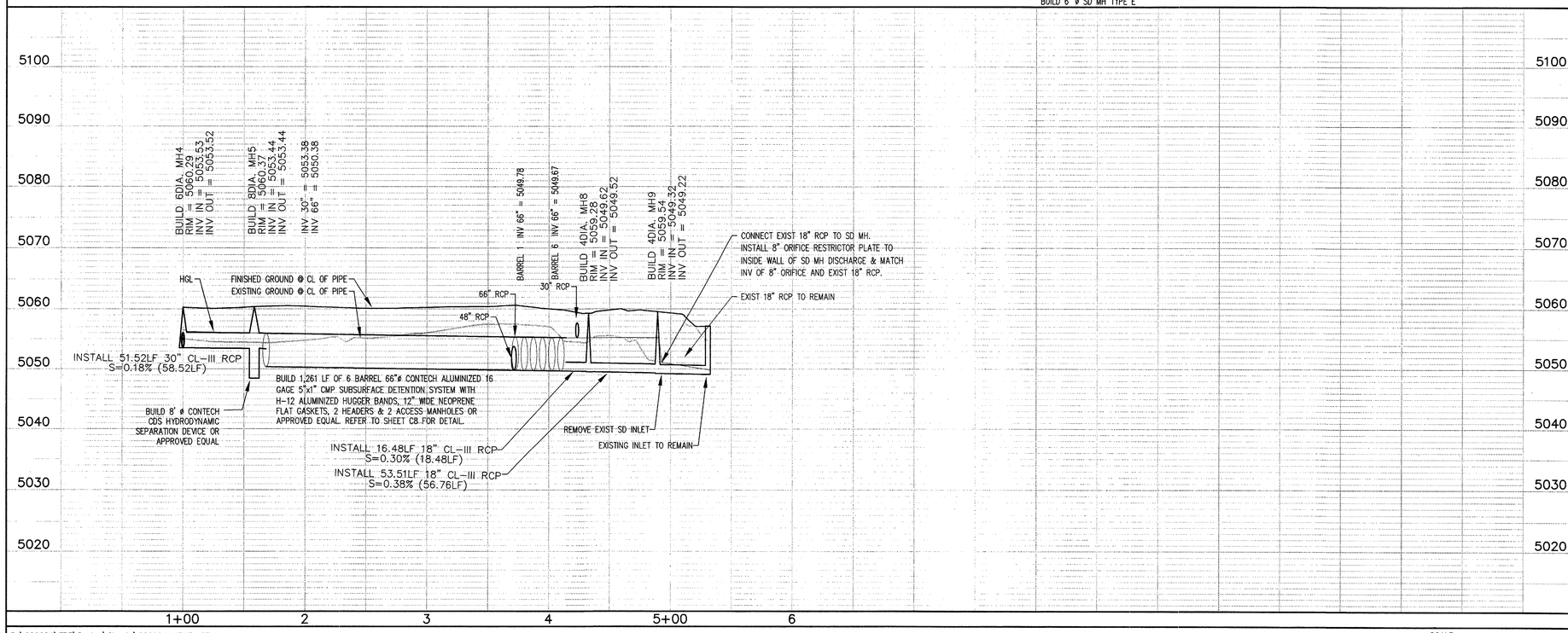

KEYED NOTES

1 BUILD 6' ø TYPE E ACCESS MANHOLE

GENERAL NOTES

1. THE CONTRACTOR SHALL FIELD VERIFY ALL EXISTING UTILITY LOCATIONS AND NOTIFY THE ENGINEER IMMEDIATELY OF ANY DISCREPANCIES.
2. ALL CURVE DATA AND DIMENSIONS ARE CALCULATED FROM CENTERLINE OF PIPE OR MANHOLE. ALL SAS & SD SLOPES ARE CALCULATED TO TRUE PIPE DIMENSIONS FROM INVERT TO INVERT.
3. CONTRACTOR IS RESPONSIBLE FOR REPAIR AND/OR REPLACE-MENT OF ALL UTILITY CONDUITS AND EXISTING LINES.
4. CONTRACTOR SHALL PARK EQUIPMENT AND VEHICLES AS NOT TO INTERFERE WITH NORMAL ACTIVITIES OF RESIDENTS OR OTHER CONTRACTORS ON SITE.
5. ANY DAMAGE TO THE EXISTING FACILITIES (CURB & GUTTER, PAVEMENT, CONDUITS, LANDSCAPING, UTILITY LINES, ETC.) DURING CONSTRUCTION SHALL BE REPLACED AT THE CONTRACTORS' EXPENSE.
6. MANHOLE RIMS AND CATCH BASIN INLET ELEVATIONS ARE APPROXIMATE.
7. MANHOLES SHALL BE TYPE "E" BUILT PER COA STD DRAWINGS 2102.
8. FOR RCP STORM DRAIN CONSTRUCTION: ALL RCP JOINTS SHALL NOT BE GROUTED PRIOR TO FINAL INSPECTION. FINAL INSPECTION SHALL DETERMINE WHICH JOINTS ARE TO BE GROUTED FOR FINAL ACCEPTANCE OF THE CONSTRUCTION.
9. ALL EXCAVATION, TRENCHING AND SHORING ACTIVITIES MUST BE CARRIED-OUT IN ACCORDANCE WITH OSHA 29 CFR 1926.650 SUBPART P.
10. AREA STORM DRAIN INLETS SHALL BE EITHER SINGLE TYPE "D" INLETS BUILT PER COA STD DRAWING 2206.
11. CURB INLETS SHALL BE EITHER TYPE "A" INLET BUILT PER COA STD DRAWING 2201.
12. INLET GRATES SHALL BE BUILT PER COA STD. DRAWING 2220.
13. LOCATION DATA FOR MANHOLES AND INLETS IS CENTER OF STRUCTURE UNLESS NOTED OTHERWISE.

AS-BUILT INFORMATION

	DATE
CONTRACTOR	
WORK STAKED BY	
INSPECTOR ACCEPTANCE BY	
FIELD VERIFICATION BY	
DRAWINGS CORRECTED BY	

MICRO-FILM INFORMATION

	DATE
RECORDED BY	
NO.	

BENCH MARKS

△	EASTING	NORTHING
1	1518721.34	1531633.20
2	1518589.79	1531000.98
3	1517968.99	1531460.91

SURVEY INFORMATION
FIELD NOTES

NO.	BY	DATE

ENGINEER'S SEAL

JAMES N. KIRKPATRICK
NEW MEXICO
4233
12-13-07
REGISTERED PROFESSIONAL ENGINEER

NO.	DATE	REMARKS	BY
		REVISIONS	
		DESIGN	

DESIGNED BY ME DATE 07/2007
DRAWN BY ME\RGG DATE 07/2007
CHECKED BY JF DATE 07/2007

Bohannan ▲ Huston
Courtyard I 7500 Jefferson St. NE Albuquerque, NM 87109-4335
ENGINEERING ▲ SPATIAL DATA ▲ ADVANCED TECHNOLOGIES

CITY OF ALBUQUERQUE
DEPARTMENT OF MUNICIPAL DEVELOPMENT

7 BAR LOOP PARK & RIDE
STORM DRAIN PLAN AND PROFILE
STA: 1+00 - 5+37

DESIGN REVIEW COMMITTEE	CITY ENGINEER APPROVAL	LAST DESIGN UPDATE	MO./DAY/YR.	MO./DAY/YR.
APPROVED DEC 24 2007 DESIGN REVIEW COMMITTEE	APPROVED DEC 24 2007 CITY ENGINEER			

CITY PROJECT NO.	ZONE MAP NO.	SHEET	OF
6065.01	A – 13	C7	C8

SCALE: 1" = 50'
1" = 5'
BHI JOB NO. 080024

P:\080024\FPE\Design\Sheets\080024-UPNP-C7.dwg
Fri, 9-Nov-2007 - 11:43:am, Plotted by: RGIBSON

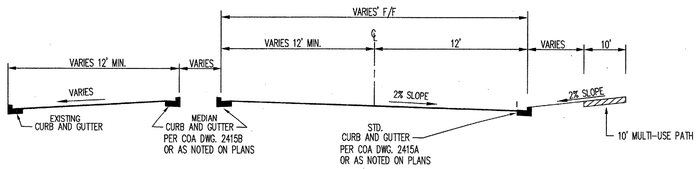

SECTION A-A
ACCESS ROAD
NOT TO SCALE

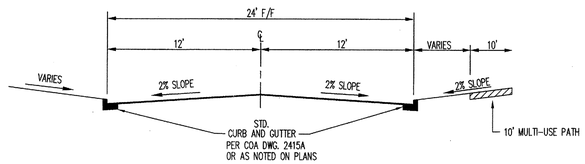

SECTION B-B
ACCESS ROAD
NOT TO SCALE

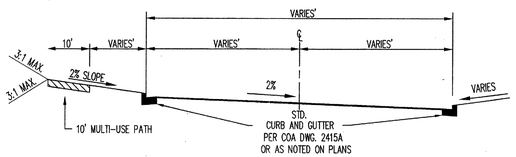

SECTION C-C
BUS LOOP
NOT TO SCALE

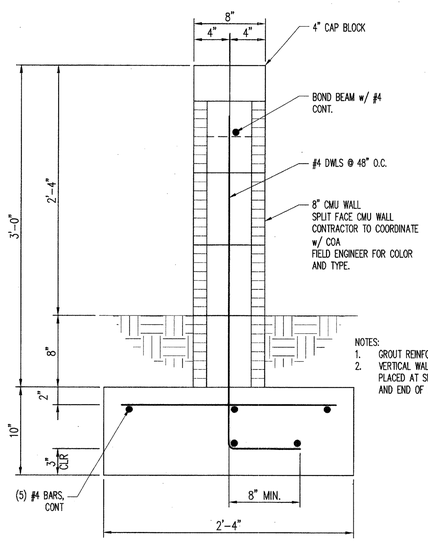

NOTES:
1. GROUT REINFORCED CELLS ONLY.
2. VERTICAL WALL REINFORCING SHALL BE PLACED AT SPACING SHOWN AND AT CORNERS AND END OF WALLS.

TYPICAL SCREEN WALL SECTION
NOT TO SCALE

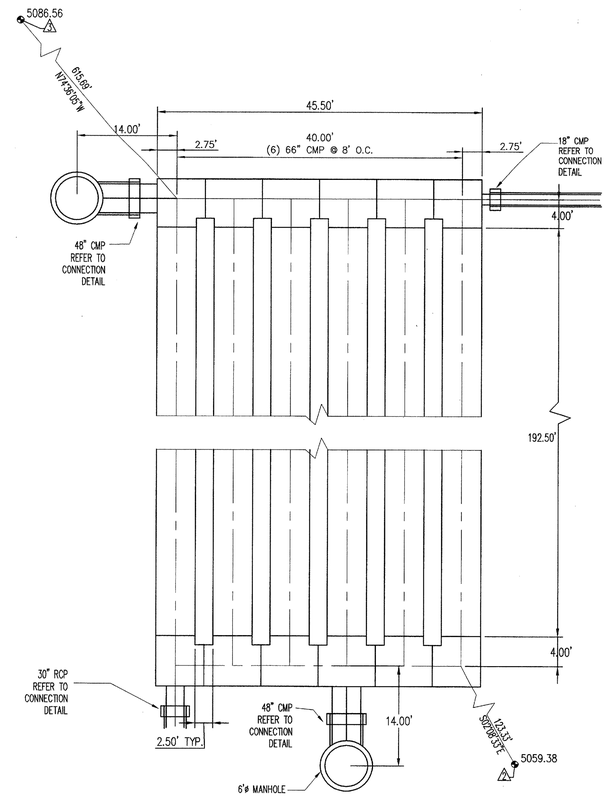

SUBSURFACE DRAINAGE FACILITY DETAIL
NOT TO SCALE

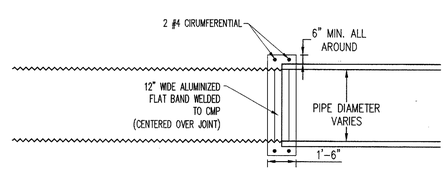

CMP TO RCP CONNECTION
NOT TO SCALE

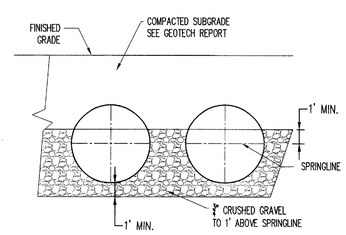

BEDDING MATERIAL DETAIL
NOT TO SCALE

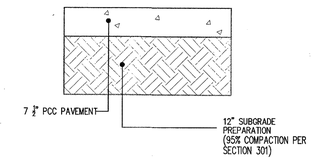

NOTE: ALL PAVING CONCRETE JOINTS INSTALLED PER COA STD DRAWINGS 2450, 2451, 2452, 2453. CONTRATOR SHALL PREPARE AND PRESENT JOINT DETAIL DRAWING TO COA FIELD ENGINEER FOR APPROVAL.

TYPICAL PAVEMENT SECTION 1
(ROADWAY)

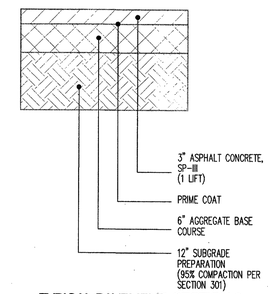

TYPICAL PAVEMENT SECTION 2
(PARKING LOT)

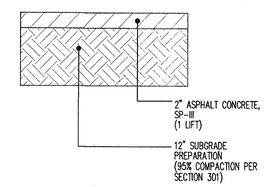

TYPICAL PAVEMENT SECTION 3
(MULTI USE PATH)

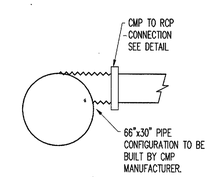

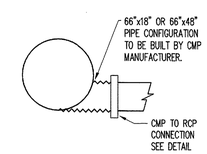

CONNECTION DETAIL
NOT TO SCALE

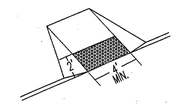

ADA TACTILE WARNING DEVICES
NOT TO SCALE

CONTRACTOR SHALL INSTALL ADA TACTILE WARNING DEVICES ON NEW CURB RAMPS. THE WARNING DEVICES SHALL BE CAST-IN-PLACE WITH TRUNCATED DOME TACTILE CUES. THE COLOR MUST BE RED. CONTACT THE CITY OF ALBUQUERQUE DEPARTMENT OF PUBLIC INFRASTRUCTURE FOR AN APPROVED LIST VENDORS AND PRODUCTS.

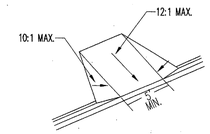

CURB RAMP DETAIL "A"
NOT TO SCALE

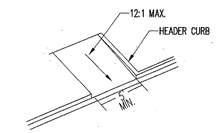

CURB RAMP DETAIL "B"
NOT TO SCALE

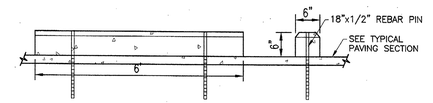

STANDARD PARKING BLOCK DETAIL
NOT TO SCALE

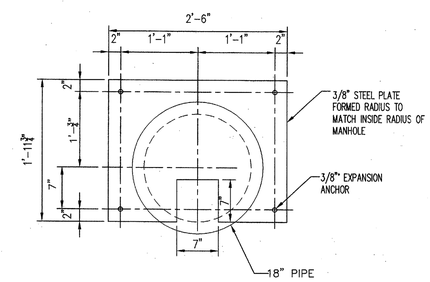

ORIFICE PLATE DETAIL
NOT TO SCALE

AS-BUILT INFORMATION

CONTRACTOR	DATE
WORK STAKED BY	DATE
INSPECTOR ACCEPTANCE	DATE
FIELD VERIFICATION BY	DATE
DRAWINGS CORRECTED BY	DATE

MICRO-FILM INFORMATION

RECORDED BY	DATE
NO.	DATE

BENCH MARKS

	EASTING	NORTHING
1	1518121.34	1531033.20
2	1518588.79	1530000.98
3	1517969.99	1531490.91

SURVEY INFORMATION
FIELD NOTES

NO.	BY	DATE

ENGINEER'S SEAL
REGISTERED PROFESSIONAL ENGINEER JAMES W. FLINT NEW MEXICO 14233

NO.	DATE	REMARKS	BY
		REVISIONS	
		DESIGN	

DESIGNED BY RGG DATE 07/2007
DRAWN BY RGG DATE 07/2007
CHECKED BY JF DATE 07/2007

Bohannan ▲ Huston
Courtyard I 7500 Jefferson St. NE Albuquerque, NM 87109-4335
ENGINEERING ▲ SPATIAL DATA ▲ ADVANCED TECHNOLOGIES

CITY OF ALBUQUERQUE
DEPARTMENT OF MUNICIPAL DEVELOPMENT

7 BAR LOOP PARK & RIDE
CONSTRUCTION DETAILS

DESIGN REVIEW COMMITTEE: APPROVED DESIGN REVIEW COMMITTEE
CITY ENGINEER APPROVAL: APPROVED CITY ENGINEER
LAST DESIGN UPDATE | MO./DAY/YR. | MO./DAY/YR.

CITY PROJECT NO.	ZONE MAP NO.	SHEET	OF
6065.01	A – 13	C8	C8

BHI JOB NO. 080024

P:\080024\FPE\Design\Sheets\080024-DET-C8.dwg
Fri, 9-Nov-2007 – 9:42:am, Plotted by: RGIBSON

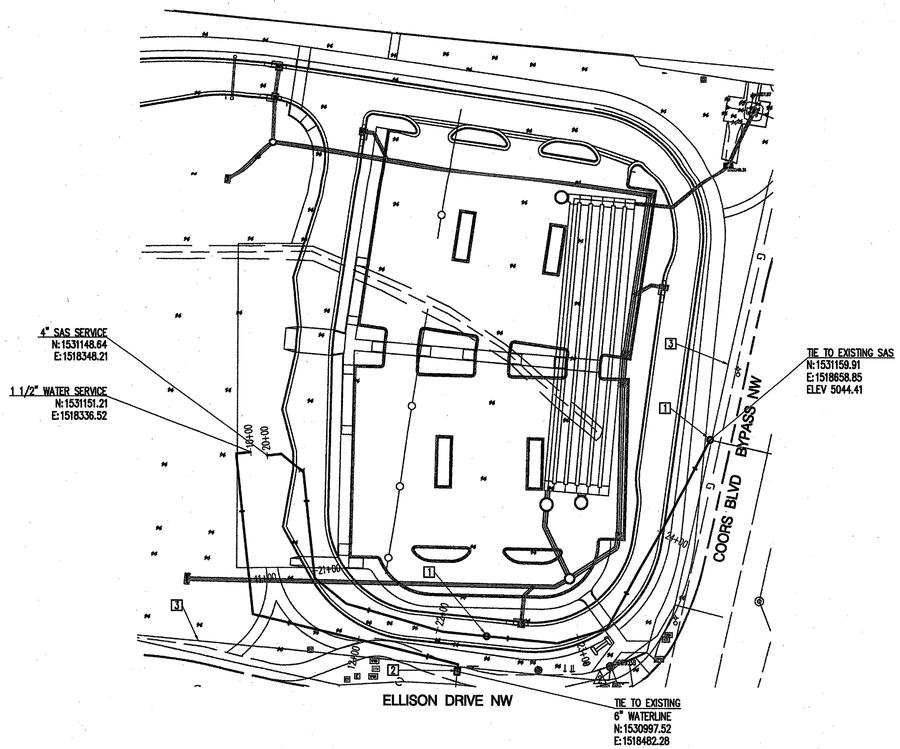

KEYED NOTES

1. INSTALL TYPE "E" MANHOLE IN ACCORDANCE WITH CITY OF ALBUQUERQUE STANDARD DRAWING 2102.
2. INSTALL 1 1/2" WATER METER BOX.
3. RIGHT OF WAY.

GENERAL NOTES

1. THE CONTRACTOR SHALL FIELD VERIFY ALL EXISTING UTILITY LOCATIONS AND NOTIFY THE ENGINEER IMMEDIATELY OF ANY DISCREPANCIES.
2. CONTRACTOR IS RESPONSIBLE FOR REPAIR AND/OR REPLACEMENT OF ALL UTILITY CONDUITS AND EXISTING LINES.
3. CONTRACTOR SHALL PARK EQUIPMENT AND VEHICLES AS NOT TO INTERFERE WITH NORMAL ACTIVITIES OF RESIDENTS OR OTHER CONTRACTORS ON SITE.
4. ANY DAMAGE TO THE EXISTING FACILITIES (CURB & GUTTER, PAVEMENT, CONDUITS, LANDSCAPING, UTILITY LINES, ETC.) DURING CONSTRUCTION SHALL BE REPLACED AT THE CONTRACTORS' EXPENSE.
5. MANHOLE RIMS AND CATCH BASIN INLET ELEVATIONS ARE APPROXIMATE.
6. ALL EXCAVATION, TRENCHING AND SHORING ACTIVITIES MUST BE CARRIED IN ACCORDANCE WITH OSHA 29 CFR 1926.650 SUBPART P.
7. LOCATION DATA FOR MANHOLES AND INLETS IS CENTER OF STRUCTURE UNLESS NOTED OTHERWISE.
8. ALL BENDS IN PROPOSED SANITARY SEWER PIPE AND WATER PIPE ARE STANDARD.
9. CONSTRUCTION OF NEW UNDERGROUND SANITARY SEWER AND WATER PIPES SHALL BE IN ACCORDANCE WITH NEW MEXICO UTILITIES, INC (NMUI) SPECIFICATIONS FOR WATER AND WASTEWATER FACILITIES UNLESS NOTED OTHERWISE.
10. COORDINATE ALL NEW CONSTRUCTION WITH BOHANNON HUSTON INC. (BHI) CONTRACT DRAWINGS, CITY OF ALBUQUERQUE PROJECT NUMBER 6065.01.

N

50 25 0 50
SCALE: 1"= 50'

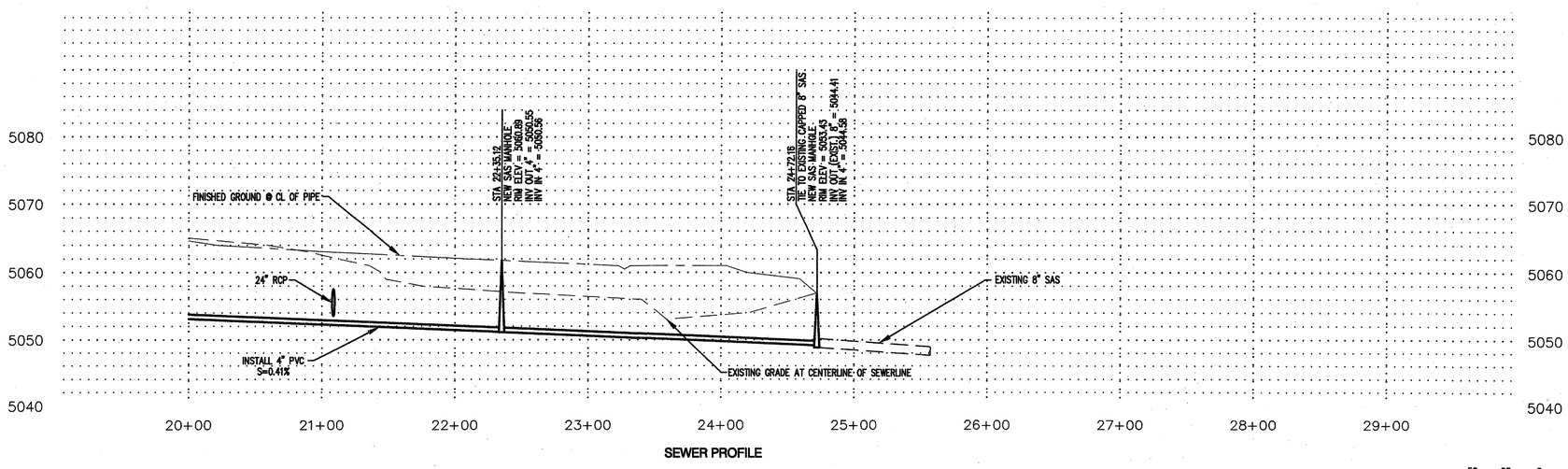

SEWER PROFILE

50 25 0 50
SCALE: 1"= 50'

5 2.5 0 5
SCALE: 1"= 5'

NMUI PLAN CHECK DATE

DMJM DESIGN | AECOM
201 THIRD STREET NW, SUITE 600
ALBUQUERQUE, NEW MEXICO 87102

CITY OF ALBUQUERQUE
DEPARTMENT OF
MUNICIPAL DEVELOPMENT

7 BAR LOOP PARK AND RIDE
UTILITY PLAN

DESIGN REVIEW COMMITTEE: APPROVE DEC 2 4 2007 DESIGN REVIEW COMMITTEE

CITY ENGINEER APPROVAL: APPROVE DEC 2 4 2007 CITY ENGINEER

LAST DESIGN UPDATE | MO./DAY/YR. | MO./DAY/YR.

CITY PROJECT NO.	ZONE MAP NO.	SHEET	OF
6065.03	A-13	C9	C9

AS-BUILT INFORMATION

CONTRACTOR	DATE
WORK STAKED BY	DATE
INSPECTOR'S ACCEPTANCE BY	DATE
FIELD VERIFICATION BY	DATE
DRAWINGS CORRECTED BY	DATE

MICRO-FILM INFORMATION

RECORDED BY	DATE
NO.	DATE

BENCH MARKS

STATION NAME: NM 448 - N12
BRASS TABLET SET IN A CONCRETE TABLET PROJECTING 0.3 FEET ABOVE GROUND LOCATED 9.30 MILES NORTH OF THE INTERSECTION COORS ROAD AND CENTRAL AVENUE ON THE WEST SIDE OF COORS ROAD AT MT. BELL SUB STATION.
NORTHING: 1,528,910.94
EASTING: 351,106.54
ELEVATION: 5023.411 (NGVD29) [5026.13 (NAVD 88)]

SURVEY INFORMATION

FIELD NOTES

NO.	BY	DATE

ENGINEER'S SEAL

REGISTERED PROFESSIONAL ENGINEER
STATE OF NEW MEXICO
No. 4856
DAVID J. LARROW

NO.	DATE	REMARKS	BY

REVISIONS

DESIGN

DESIGNED BY	M. TARIN	DATE 11/26/07
DRAWN BY	J.L. MOORE	DATE 11/26/07
CHECKED BY	D. LARROW	DATE 11/26/07

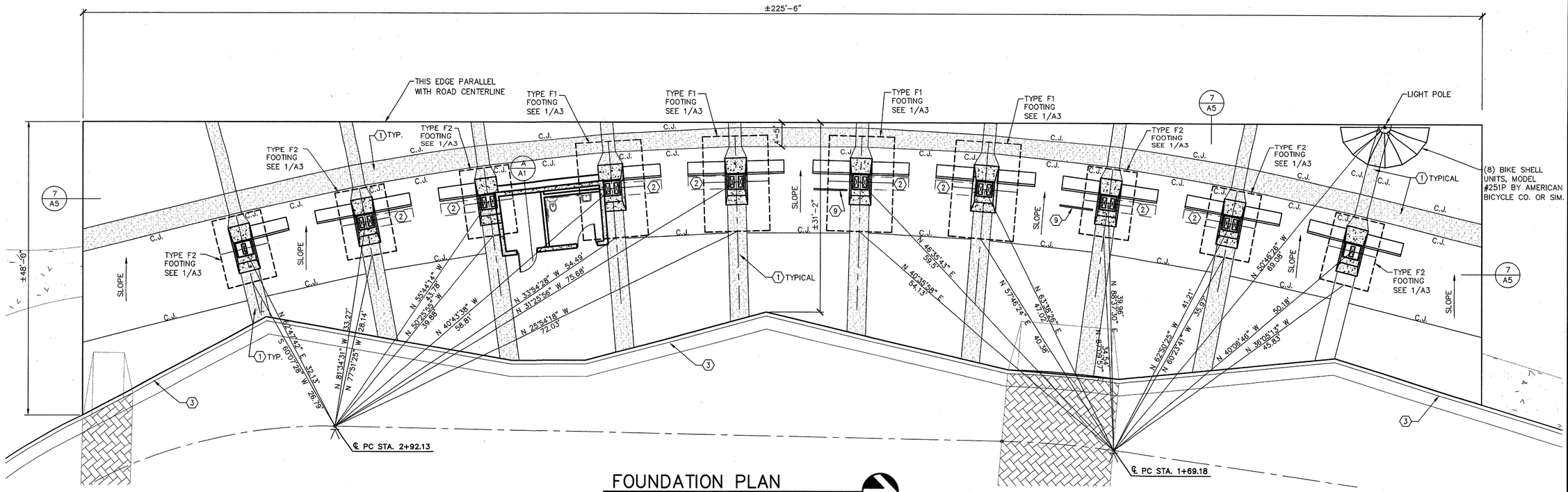

FOUNDATION PLAN

SCALE: 1/8"=1'-0"

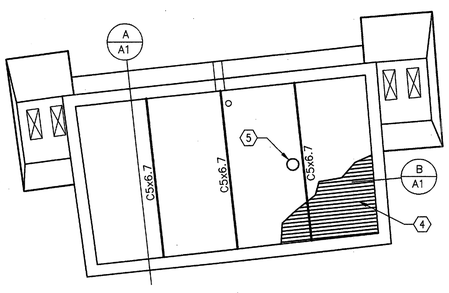

ROOF FRAMING PLAN

SCALE: 1/4"=1'-0"

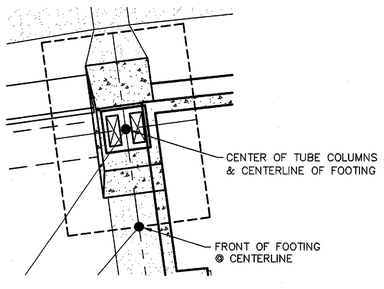

SAMPLE ALIGNMENT POINTS

SCALE: 1/4"=1'-0"

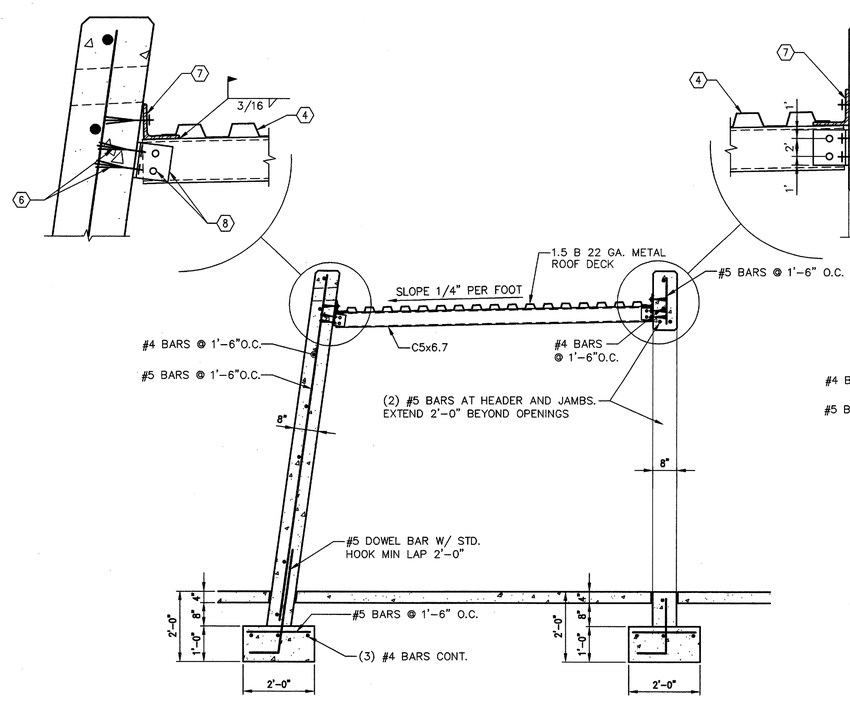

SECTION (A/A1)

SCALE: 1/2"=1'-0"

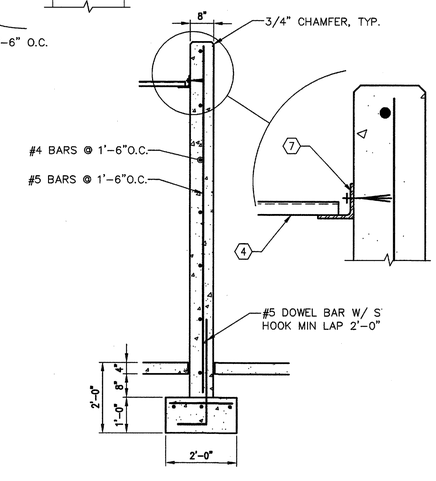

SECTION (B/A1)

SCALE: 1/2"=1'-0"

GENERAL NOTES

1. 3000 PSI CONCRETE MINIMUM.....
2. COMPACT SUBGRADE TO .....

KEYED NOTES (⬡)

1. COLORED CONCRETE – CAST IN PLACE.
2. BENCH (SEE SPECIFICATIONS).
3. CONCRETE CURB AND GUTTER, SEE CIVIL
4. 1.5 B 22 GA. ROOF DECK, 36/3 PATTERN W/ #12 TEK SCREWS AT SUPPORTS
5. ROOF DECK OPENING. COORDINATE SIZE AND LOCATION WITH MECHANICAL.
6. 2 – 5/8"ø HILTI KWIK BOLT 3 EXP. ANCHORS, EMBED = 5 1/2"
7. L4x4x1/4 CONTINUOUS W/ 5/8"ø HILTI KWIK BOLT 3 EXP. ANCHORS @ 4'-0"O.C. EMBED = 5 1/2"
8. L4x4x3/8 x 0'-4" CLIP ANGLE W/ 2 – 3/4" A325 BOLTS
9. 64" BIKE RACK BY AMERICAN BICYCLE SECURITY CO. OR SIMILAR. PAINTED "RED"

AS-BUILT INFORMATION
CONTRACTOR — DATE
WORK STAKED BY — DATE
INSPECTOR ACCEPTANCE — DATE
FIELD VERIFICATION BY — DATE
DRAWINGS CORRECTED BY — DATE

MICRO-FILM INFORMATION
RECORDED BY — DATE
NO. — DATE

BENCH MARKS

SURVEY INFORMATION
FIELD NOTES

NO.	BY	DATE

ENGINEER'S SEAL

NO.	DATE	REMARKS	BY
		REVISIONS	
		DESIGN	

DESIGNED BY — DATE
DRAWN BY — DATE
CHECKED BY — DATE

DMJM DESIGN | AECOM
201 THIRD STREET NW, SUITE 600
ALBUQUERQUE, NEW MEXICO 87102

CITY OF ALBUQUERQUE
DEPARTMENT OF MUNICIPAL DEVELOPMENT

7 BAR LOOP PARK & RIDE
SITE LOCATION PLAN

DESIGN REVIEW COMMITTEE — APPROVED DEC 04 2007 DESIGN REVIEW COMMITTEE
CITY ENGINEER APPROVAL — DEC 04 2007 CITY ENGINEER
LAST DESIGN UPDATE — MO./DAY/YR. — MO./DAY/YR.

CITY PROJECT NO. 6065.03
ZONE MAP NO. A – 13
SHEET A1 OF A7

P:_DESIGN\COA-AE\Bus Shelters\500 CAD\A\Sheet\A1.dwg
Mon, 26-Nov-2007 – 2:20:pm, Plotted by: GALLEGOSA

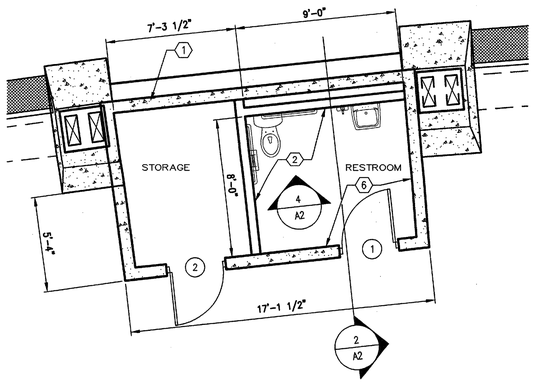

1 A2 ENLARGED FLOOR PLAN

SCALE: 1/4"=1'-0"

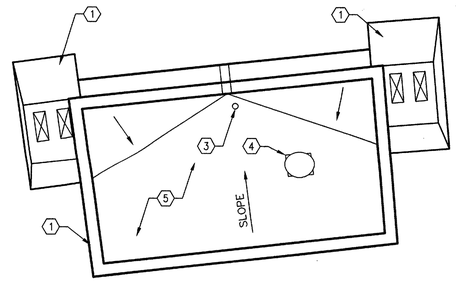

3 A2 ENLARGED ROOF PLAN

SCALE: 1/4"=1'-0"

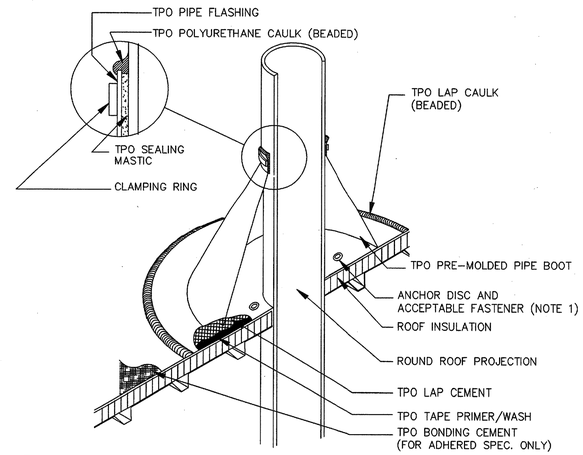

5 A2 ROOF PENETRATION DETAIL

SCALE: 1/4"=1'-0"

KEYED NOTES ( )

1. COLORED CONCRETE – CAST IN PLACE
2. 3-5/8" METAL STUDS BUILT TO UNDERSIDE OF DECK WITH 5/8" GYP. BOARD ON STORAGE SIDE AND CEMENT BACKER BOARD ON RESTROOM SIDE. FLOOR TO CEILING TILE ON THESE WALLS IN RESTROOM SIDE.
3. VENT THROUGH ROOF. SEE DETAIL 5/A2
4. EXHAUST FAN. SEE MECHANICAL.
5. SINGLE PLY ROOFING SYSTEM (TPO). JOHNS MANVILLE ST4RA OR SIMILAR. SEE DETAILS 5, 6, AND 7/A2 FOR FLASHING DETAILS.
6. EXPOSED CONCRETE WALLS TO REMAIN
7. SURFACE MOUNTED HORIZONTAL SOAP DISPENSER, BOBRICK MODEL B-2112 OR SIMILAR
8. MIRROR WITH STAINLESS STEEL FRAME, BOBRICK MODEL B-293 1836 OR SIMILAR
9. SURFACE MOUNTED PAPER TOWEL DISPENSER, BOBRICK MODEL B-2860 OR SIMILAR
10. CERAMIC WALL TILE
11. CERAMIC TILE BASE
12. SPACE HEATER. SEE MECHANICAL
13. 36" GRAB BAR, BOBRICK MODEL B-242 OR SIMILAR
14. 42" GRAB BAR, BOBRICK MODEL B-246 OR SIMILAR
15. SURFACE MOUNTED TOILET TISSUE DISPENSER, BOBRICK MODEL B-2840 OR SIMILAR
16. RIGID INSULATION
17. HOLLOW METAL DOOR FRAME
18. EXPOSED METAL DECK, PAINTED
19. 12' x 16" STAINLESS STEEL ACCESS DOOR. ACUDOR UF-5000 OR SIMILAR.
20. SEALANT AROUND PERIMETER ON BOTH SIDES. TYPICAL.

DOOR AND FRAME SCHEDULE

MARK	DOOR SIZE WD	DOOR SIZE HGT	DOOR SIZE THK	DOOR MATL	DOOR FIN	DOOR EL	FRAME MATL	FRAME FIN	FRAME EL	FRAME DETAILS HEAD	FRAME DETAILS JAMB	HARDWARE SET NO	HARDWARE KEYED SIDE
1	3'-0"	7'-0"	1 3/4"	HM	PAINTED	D1	HM	PAINTED	F1	2/A2	2/A2 SIM	1	EXT
2	3'-0"	7'-0"	1 3/4"	HM	PAINTED	D1	HM	PAINTED	F1	2/A2	2/A2 SIM	2	EXT

HW SET: 01
DOOR NUMBER: 1

EACH TO HAVE:

4	EA. HINGE	5BB1 4.5 X 4.5	652 IVERSON
1	EA. LOCK	PDL3000	TRILOGY
1	EA. DOOR HOLDER	FS452-4"	626 IVERSON
1	EA. WALL STOP	WS406CVX	630 IVERSON
1	EA. SILENCER	SR64	GRY IVERSON

HW SET: 02
DOOR NUMBER: 2

EACH TO HAVE:

4	EA. HINGE	5BB1 4.5 X 4.5	652 IVERSON
1	EA. LOCK	B660	626 SCHLAGE
1	EA. STANDARD CORE	23-030	626 SCHLAGE
1	EA. DOOR HOLDER	FS452-4"	626 IVERSON
1	EA. WALL STOP	WS406CVX	630 IVERSON
1	EA. SILENCER	SR64	GRY IVERSON

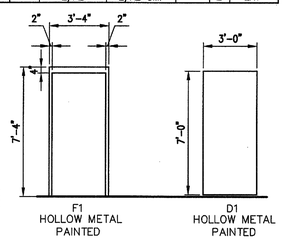

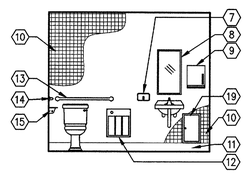

4 A2 RESTROOM ELEVATION

SCALE: 1/4"=1'-0"

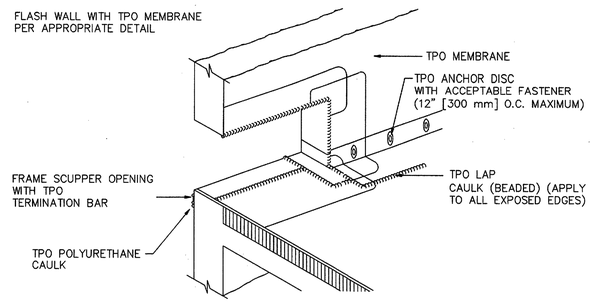

6 A2 SCUPPER FLASHING DETAIL

SCALE: 1/4"=1'-0"

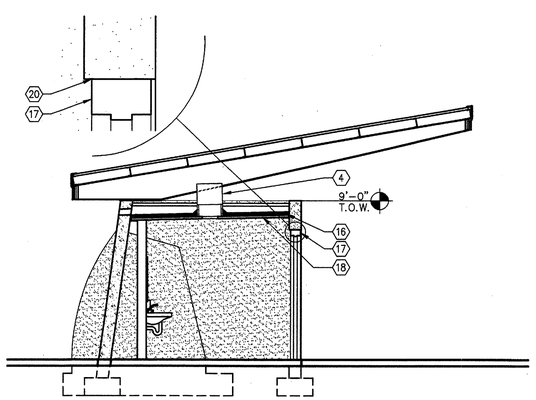

2 A2 SECTION

SCALE: 1/4"=1'-0"

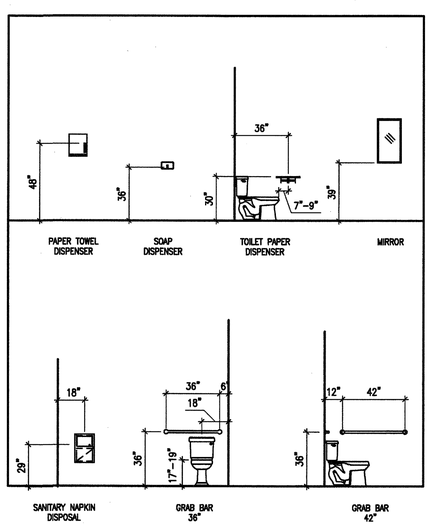

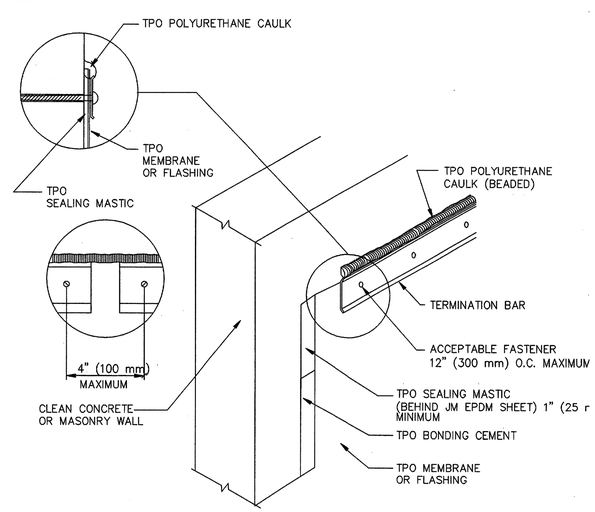

7 A2 ROOF DETAIL

SCALE: 1/4"=1'-0"

AS-BUILT INFORMATION
CONTRACTOR — DATE
WORK STAKED BY — DATE
INSPECTOR ACCEPTANCE — DATE
FIELD VERIFICATION BY — DATE
DRAWINGS CORRECTED BY — DATE
MICRO-FILM INFORMATION
RECORDED BY — DATE
NO. — DATE

BENCH MARKS

SURVEY INFORMATION
FIELD NOTES
NO. | BY | DATE

ENGINEER'S SEAL

NO.	DATE	REVISIONS	BY

REMARKS

DESIGN
DESIGNED BY — DATE
DRAWN BY — DATE
CHECKED BY — DATE

DMJM DESIGN | AECOM
201 THIRD STREET NW, SUITE 600
ALBUQUERQUE, NEW MEXICO 87102

CITY OF ALBUQUERQUE
DEPARTMENT OF MUNICIPAL DEVELOPMENT

7 BAR LOOP PARK & RIDE
SITE LOCATION PLAN

DESIGN REVIEW COMMITTEE — APPROVE DEC 2 4 2007 DESIGN REVIEW COMMITTEE
CITY ENGINEER APPROVAL — APPROVE DEC 2 4 2007 CITY ENGINEER
LAST DESIGN UPDATE — MO./DAY/YR. | MO./DAY/YR.

CITY PROJECT NO. 6065.03 | ZONE MAP NO. A – 13 | SHEET A2 OF A7

P:_DESIGN\COA-AE\Bus Shelters\500 CAD\A\Sheet\A2.dwg
Mon, 26-Nov-2007 – 2:15:pm, Plotted by: GALLEGOSA

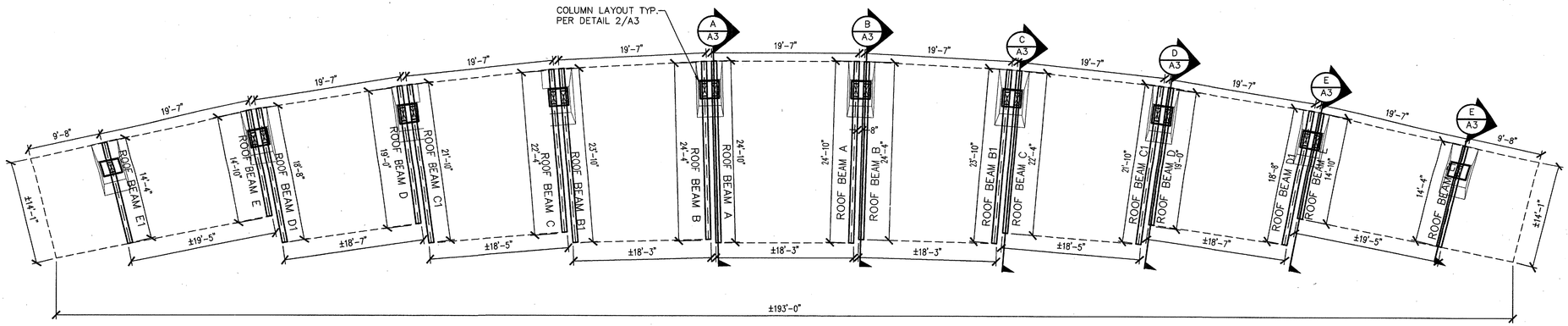

BEAM FRAMING PLAN

1/8"=1'-0"

NOTE: SEE SHEET A4 FOR ROOF FRAMING PLAN

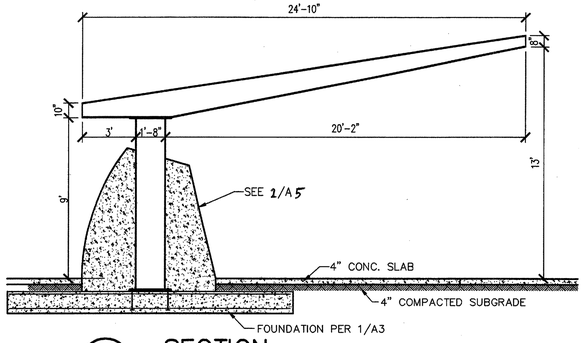

A/A3 SECTION
SCALE: 1/4"=1'-0"

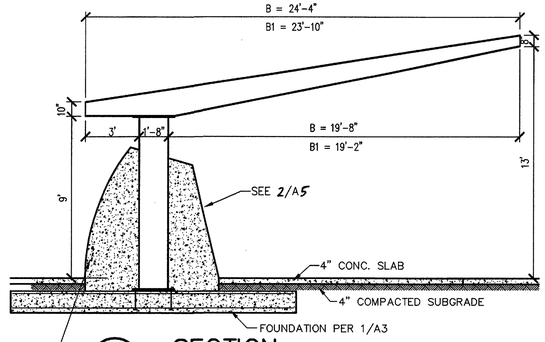

B/A3 SECTION
SCALE: 1/4"=1'-0"

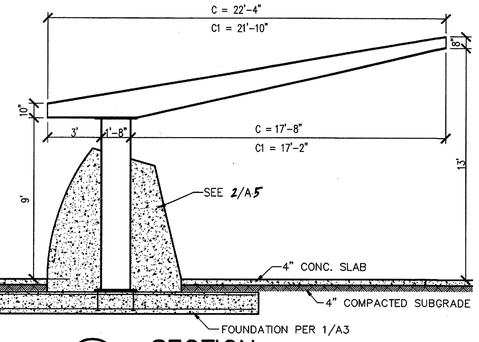

C/A3 SECTION
SCALE: 1/4"=1'-0"

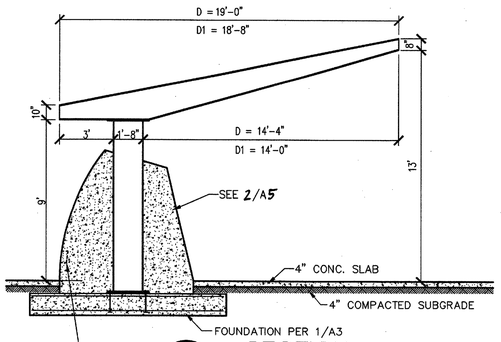

D/A3 SECTION
SCALE: 1/4"=1'-0"

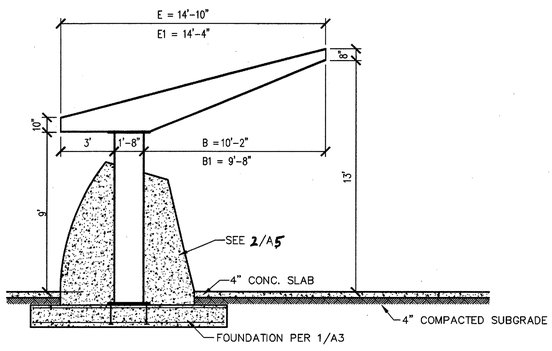

E/A3 SECTION
SCALE: 1/4"=1'-0"

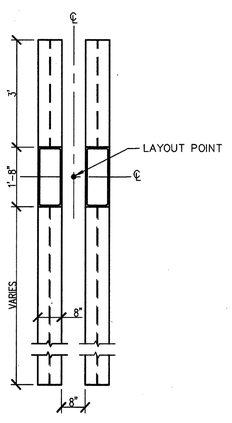

2/A3 DETAIL
SCALE: 1/2"=1'-0"

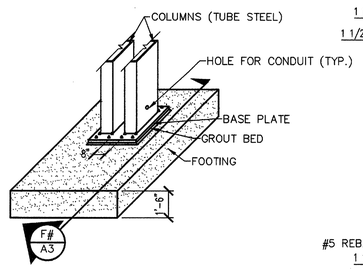

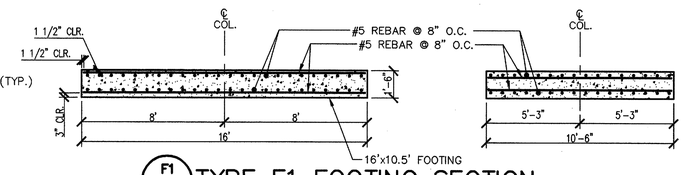

F1/A3 TYPE F1 FOOTING SECTION
SEE SHEET A1 FOR FOOTING LOCATION

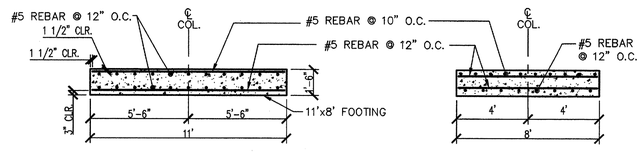

F2/A3 TYPE F2 FOOTING SECTION
SEE SHEET A1 FOR FOOTING LOCATION

1/A3 FOOTING DETAILS
SCALE: 1/4"=1'-0"

AS-BUILT INFORMATION

CONTRACTOR		DATE
WORK STAKED BY		DATE
INSPECTOR'S ACCEPTANCE		DATE
FIELD VERIFICATION BY		DATE
DRAWINGS CORRECTED BY		DATE

MICRO-FILM INFORMATION

RECORDED BY		DATE
NO.		DATE

BENCH MARKS

SURVEY INFORMATION
FIELD NOTES

NO.	BY	DATE

ENGINEER'S SEAL

NO.	DATE	REMARKS	BY
		REVISIONS	
		DESIGN	

DESIGNED BY DATE
DRAWN BY DATE
CHECKED BY DATE

DMJM DESIGN | AECOM
201 THIRD STREET NW, SUITE 600
ALBUQUERQUE, NEW MEXICO 87102

CITY OF ALBUQUERQUE
DEPARTMENT OF MUNICIPAL DEVELOPMENT

7 BAR LOOP PARK & RIDE
BUS SHELTER PLAN AND DETAILS

DESIGN REVIEW COMMITTEE: APPROVED DEC 24 2007 DESIGN REVIEW COMMITTEE
CITY ENGINEER APPROVAL: APPROVED DEC 24 2007 CITY ENGINEER
LAST DESIGN UPDATE: MO./DAY/YR. MO./DAY/YR.

CITY PROJECT NO.	ZONE MAP NO.	SHEET	OF
6065.03	A – 13	A3	A7

P:_DESIGN\COA-AE\Bus Shelters\500 CAD\A\Sheet\A3.dwg
Mon, 26-Nov-2007 – 2:15:pm, Plotted by: GALLEGOSA

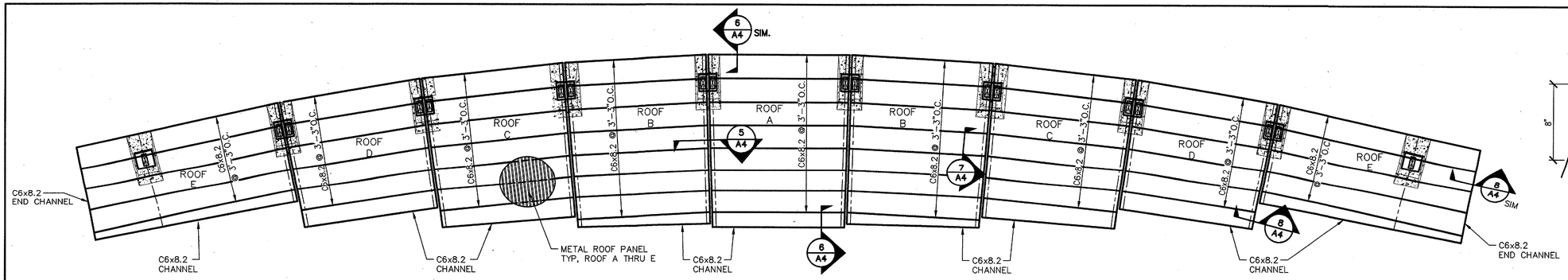

ROOF FRAMING PLAN
1/8"=1'-0"

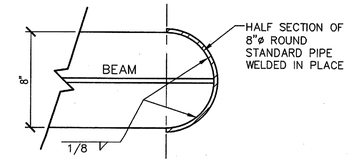

A/A4 SECTION

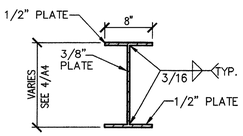

1/A4 TYP. BEAM SECTION
SCALE: 1"=1'-0"

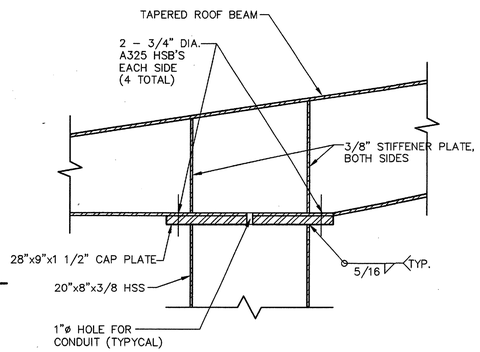

3/A4 BEAM TO COLUMN CONNECTION
SCALE: 1"=1'-0"

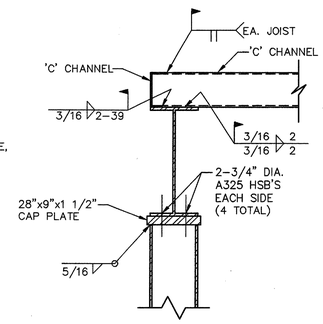

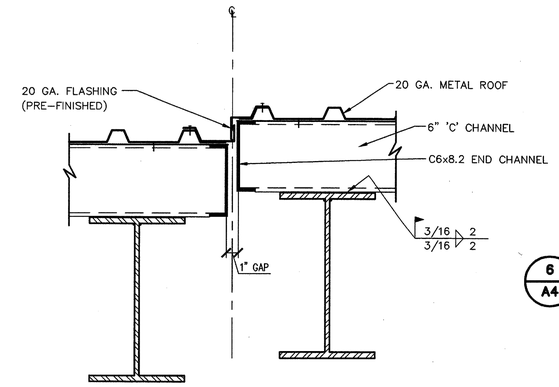

5/A4 TYPICAL JOINT FLASHING
SCALE: 1 1/2"=1'-0"

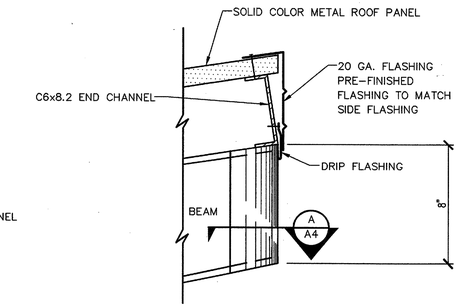

6/A4 TYP. BEAM END FLASHING DETAIL
SCALE: 1 1/2"=1'-0"

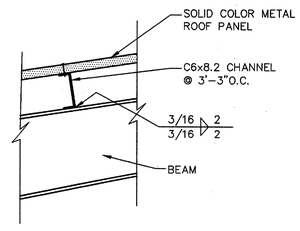

7/A4 DETAIL
SCALE: 1"=1'-0"

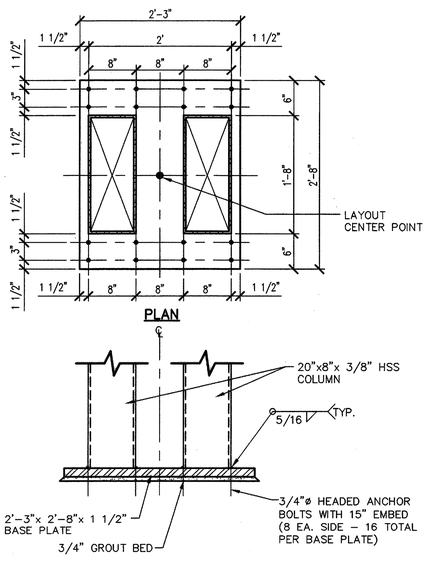

2/A4 BASE PLATE DETAILS
SCALE: 1"=1'-0"

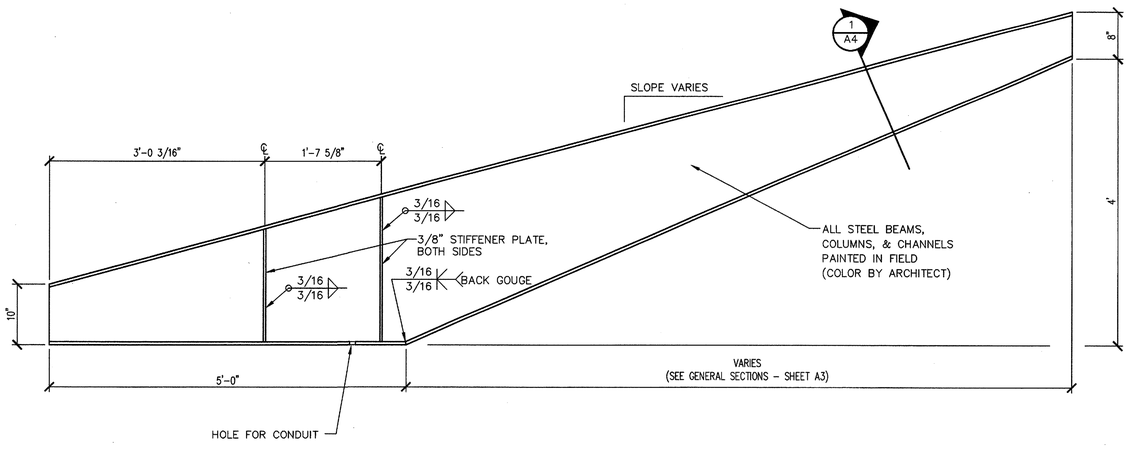

4/A4 BEAM ELEVATION
SCALE: 1"=1'-0"

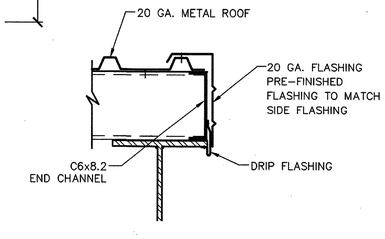

8/A4 TYPICAL SIDE FLASHING
SCALE: 1 1/2"=1'-0"

AS-BUILT INFORMATION

CONTRACTOR	DATE
WORK STAKED BY	DATE
INSPECTOR ACCEPTANCE BY	DATE
FIELD VERIFICATION BY	DATE
DRAWINGS CORRECTED BY	DATE

MICRO-FILM INFORMATION

RECORDED BY	DATE
NO.	DATE

BENCH MARKS

SURVEY INFORMATION
FIELD NOTES

NO.	BY	DATE

ENGINEER'S SEAL

NO.	DATE	REMARKS	BY
		REVISIONS	

DESIGN

DESIGNED BY		DATE
DRAWN BY		DATE
CHECKED BY		DATE

DMJM DESIGN | AECOM
201 THIRD STREET NW, SUITE 600
ALBUQUERQUE, NEW MEXICO 87102

CITY OF ALBUQUERQUE
DEPARTMENT OF MUNICIPAL DEVELOPMENT

7 BAR LOOP PARK & RIDE
BUS SHELTER PLAN AND DETAILS

DESIGN REVIEW COMMITTEE	CITY ENGINEER APPROVAL	LAST DESIGN UPDATE	MO./DAY/YR.	MO./DAY/YR.
APPROVED DEC 24 2007 DESIGN REVIEW COMMITTEE	APPROVED DEC 24 2007 CITY ENGINEER			

CITY PROJECT NO.	ZONE MAP NO.	SHEET	OF
6065.03	A - 13	A4	A7

C:\Documents and Settings\gallegosa\Local Settings\Temp\BGPlot_3036\A4.dwg
Mon, 26-Nov-2007 - 2:15:pm, Plotted by: GALLEGOSA

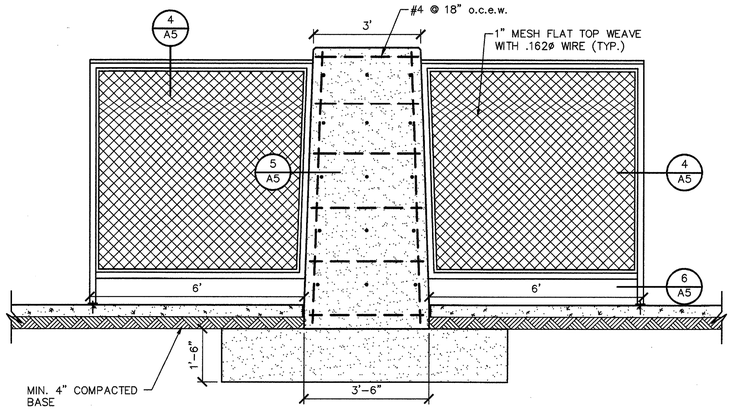

1 A5 WING & CONCRETE ELEVATIONS
SCALE: 1/2"=1'-0"

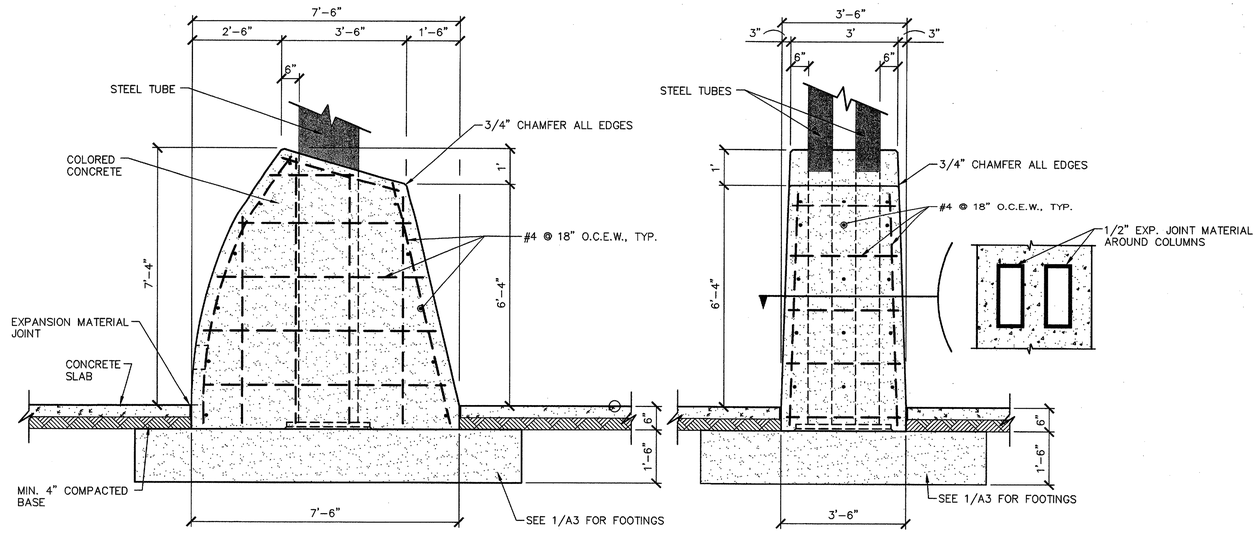

2 A5 CONCRETE ELEVATIONS
SCALE: 1/2"=1'-0"

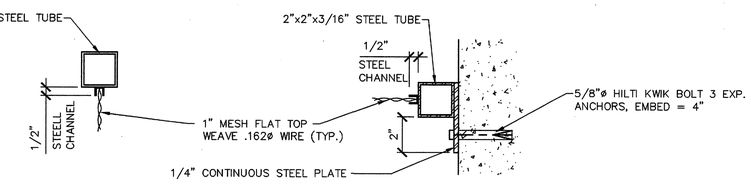

4 A5 WING DETAIL
SCALE: 3"=1'-0"

5 A5 WING DETAIL
SCALE: 3"=1'-0"

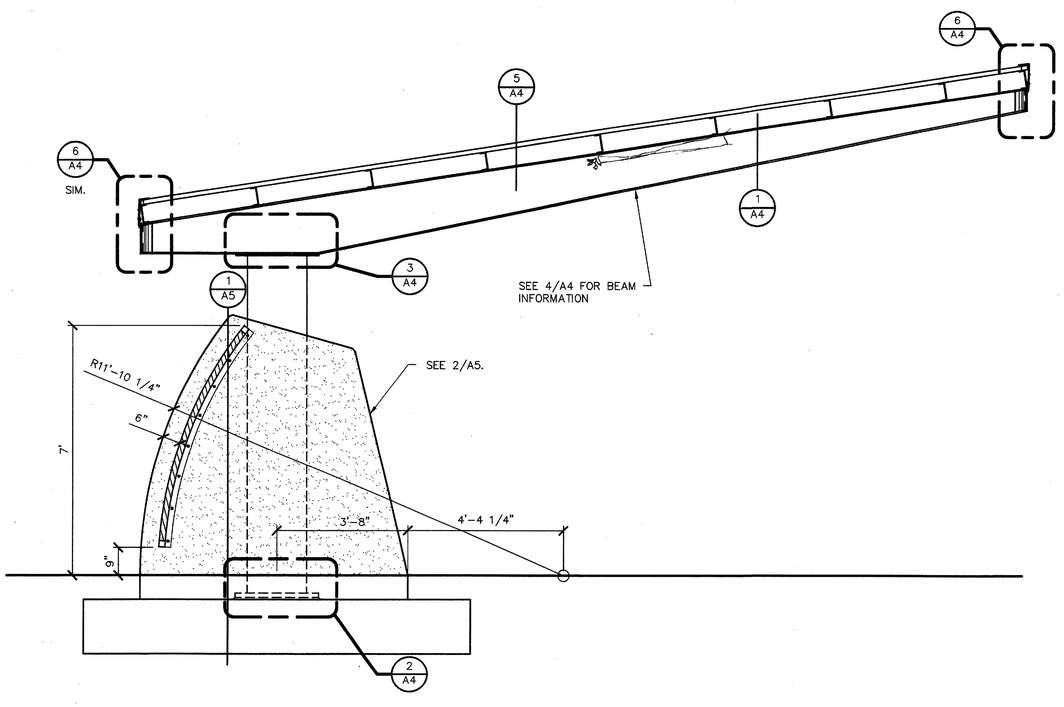

3 A5 TYPICAL SECTION
SCALE: 1/2"=1'-0"

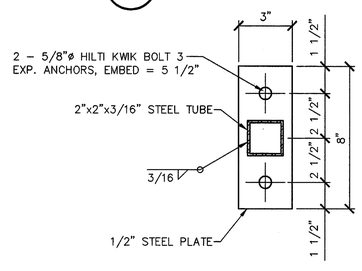

6 A5 WING DETAIL
SCALE: 3"=1'-0"

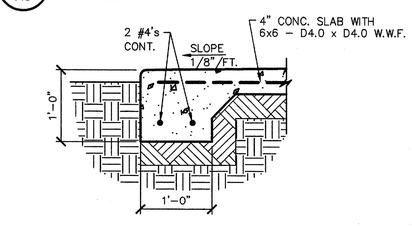

7 A5 TURNDOWN DETAIL
SCALE: 1"=1'-0"

P:_DESIGN\COA-AE\Bus Shelters\500 CAD\A\Sheet\A5.dwg
Mon, 26-Nov-2007 - 2:15:pm, Plotted by: GALLEGOSA

AS-BUILT INFORMATION
CONTRACTOR — DATE
WORK STAKED BY — DATE
INSPECTOR ACCEPTANCE BY — DATE
FIELD VERIFICATION BY — DATE
DRAWINGS CORRECTED BY — DATE

MICRO-FILM INFORMATION
RECORDED BY — DATE
NO. — DATE

BENCH MARKS

SURVEY INFORMATION
FIELD NOTES

NO.	BY	DATE

ENGINEER'S SEAL

NO.	DATE	REMARKS	BY
		REVISIONS	
		DESIGN	

DESIGNED BY — DATE
DRAWN BY — DATE
CHECKED BY — DATE

DMJM DESIGN | AECOM
201 THIRD STREET NW, SUITE 600
ALBUQUERQUE, NEW MEXICO 87102

CITY OF ALBUQUERQUE
DEPARTMENT OF MUNICIPAL DEVELOPMENT

7 BAR LOOP PARK & RIDE
BUS SHELTER ELEVATIONS

DESIGN REVIEW COMMITTEE — APPROVED DEC 24 2007 DESIGN REVIEW COMMITTEE
CITY ENGINEER APPROVAL — APPROVED DEC 24 2007 CITY ENGINEER
LAST DESIGN UPDATE — MO./DAY/YR. — MO./DAY/YR.

CITY PROJECT NO. 6065.03
ZONE MAP NO. A - 13
SHEET A5 OF A7

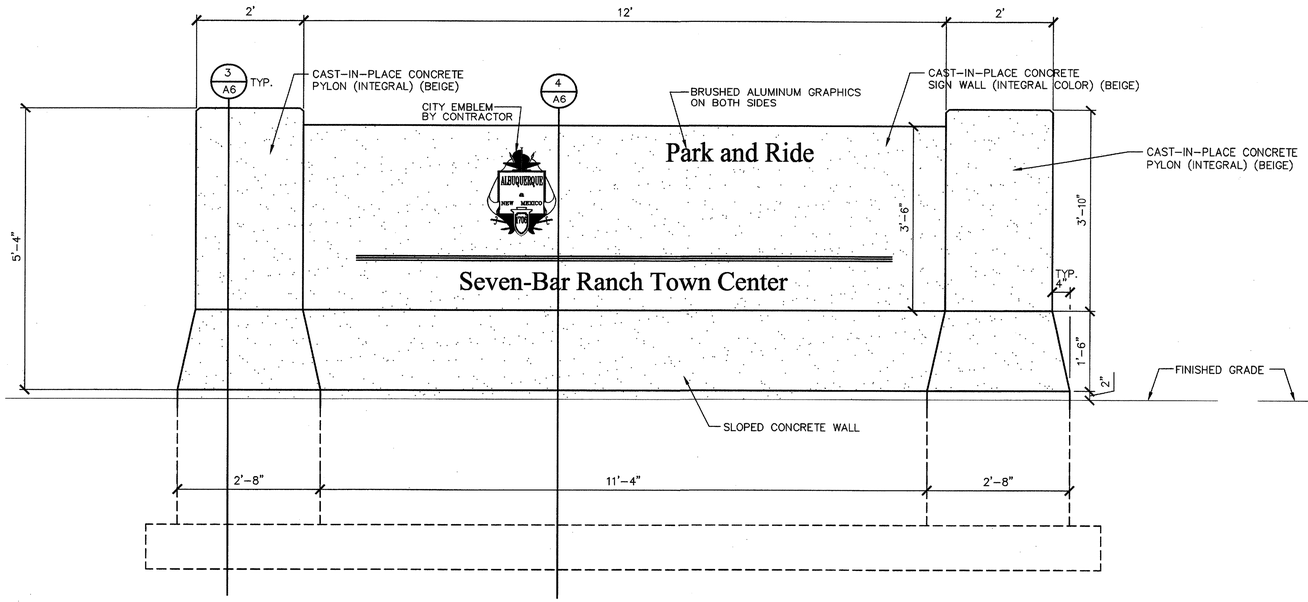

1 A6 MONUMENT SIGN AT COORS BYPASS ELEVATIONS
SCALE: 3/4"=1'-0"

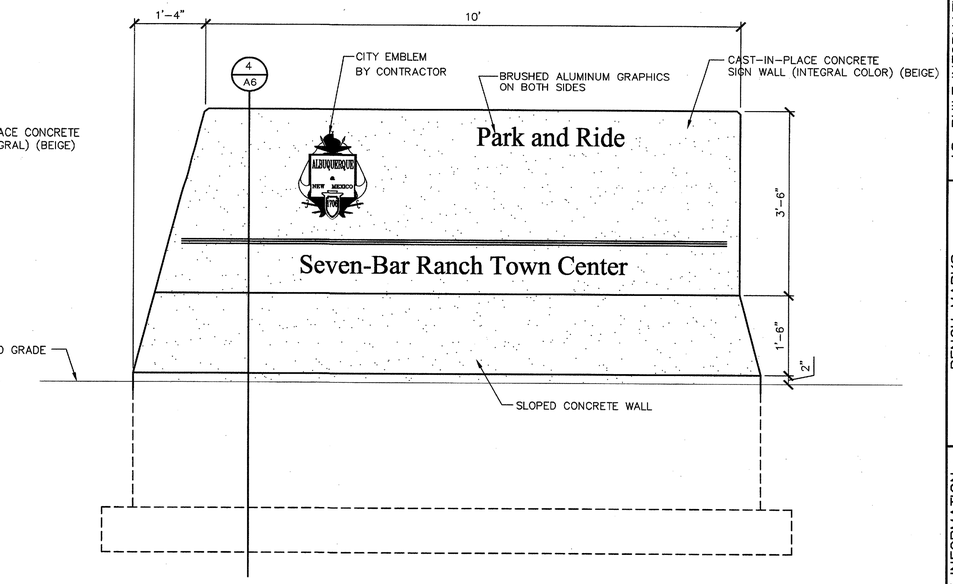

2 A6 MONUMENT SIGN AT CIBOLA LOOP. ELEVATIONS
SCALE: 3/4"=1'-0"

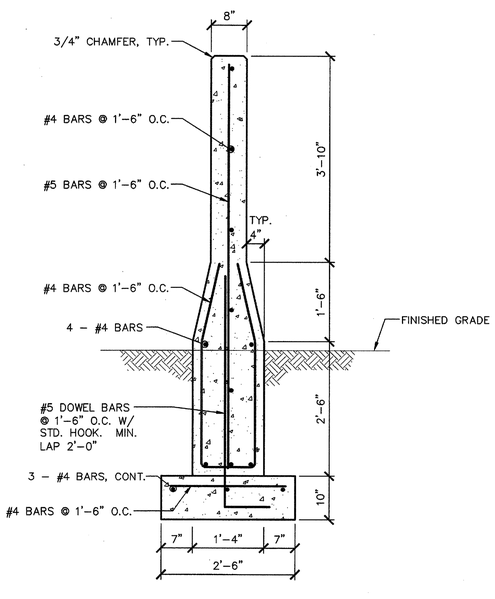

3 A6 DETAIL
SCALE: 3/4"=1'-0"

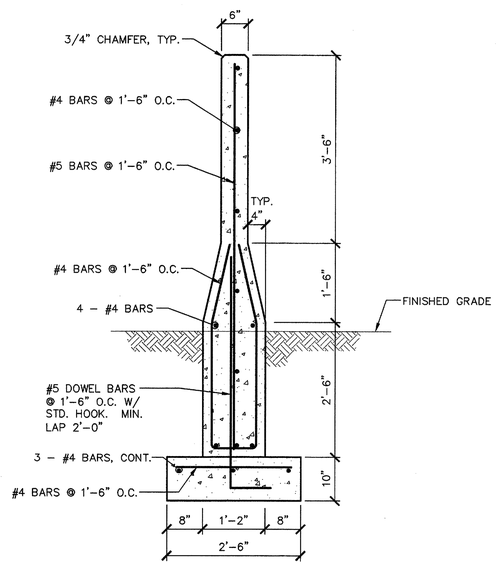

4 A6 DETAIL
SCALE: 3/4"=1'-0"

AS-BUILT INFORMATION
CONTRACTOR — DATE
WORK STAKED BY — DATE
INSPECTOR'S ACCEPTANCE BY — DATE
FIELD VERIFICATION BY — DATE
DRAWINGS CORRECTED BY — DATE

BENCH MARKS

MICRO-FILM INFORMATION
RECORDED BY — DATE
NO. — DATE

SURVEY INFORMATION
FIELD NOTES

NO.	BY	DATE

ENGINEER'S SEAL

NO.	DATE	REMARKS	BY
		REVISIONS	

DESIGNED BY — DATE
DRAWN BY — DATE
CHECKED BY — DATE

DMJM DESIGN | AECOM
201 THIRD STREET NW, SUITE 600
ALBUQUERQUE, NEW MEXICO 87102

CITY OF ALBUQUERQUE
DEPARTMENT OF MUNICIPAL DEVELOPMENT

7 BAR LOOP PARK & RIDE
SIGN ELEVATIONS

DESIGN REVIEW COMMITTEE — APPROVED DEC 24 2007 DESIGN REVIEW COMMITTEE
CITY ENGINEER APPROVAL — APPROVED DEC 24 2007 CITY ENGINEER
LAST DESIGN UPDATE — MO./DAY/YR. — MO./DAY/YR.

CITY PROJECT NO. 6065.03
ZONE MAP NO. A - 13
SHEET A6 OF A7

P:_DESIGN\COA-AE\Bus Shelters\500 CAD\A\Sheet\A6.dwg
Mon, 26-Nov-2007 - 2:15:pm, Plotted by: GALLEGOSA

GENERAL REQUIREMENTS

A. CODES AND MANUALS
1. INTERNATIONAL BUILDING CODE 2006.
2. AMERICAN SOCIETY OF CIVIL ENGINEERS, ASCE 7-05, MINIMUM DESIGN LOADS FOR BUILDINGS AND OTHER STRUCTURES.
3. ACI 318-05 BUILDING CODE REQUIREMENTS FOR REINFORCED CONC.
4. AISC-LRFD 13TH EDITION, MANUAL OF STEEL CONSTRUCTION.

B. DESIGN LOADS
1. MINIMUM DESIGN LOADS IN ACCORDANCE WITH ASCE 7-02, UNLESS NOTED OTHERWISE
   (A) DEAD LOADS:
      (1) SELFWEIGHT OF MATERIAL.
      (2) WEIGHT OF PERMANENT INSTALLED EQUIPMENT, DUCTS, PIPING (OPERATING LOADS), PLUMBING STACKS AND ELECTRICAL RACEWAYS.
   (B) LIVE LOADS:
      (1) ROOF DESIGN LIVE LOAD: 20 PSF UNIFORM LOAD (NON-REDUCIBLE) AND 200 LB. CONCENTRATED LOAD.
   (C) WIND LOADS:
      (1) OCCUPANCY CATEGORY: II
      (2) BASIC WIND SPEED: V = 90 MPH.
      (3) EXPOSURE CATEGORY: "C".
      (4) IMPORTANCE FACTOR: I = 1.0.
      (5) TOPOGRAPHIC FACTOR: Kzt = 1.0.
      (6) VELOCITY PRESSURE EXPOSURE COEFFICIENT: Kz = 0.85
   (D) SEISMIC LOADS:
      (1) OCCUPANCY CATEGORY: II
      (2) SITE CLASS: D
      (3) SEISMIC USE GROUP: I
      (4) SEISMIC DESIGN CATEGORY: D
      (5) DESIGN SPECTRA RESPONSE ACCELERATION PARAMETERS (2/3 MCE GROUND MOTION): Sds=0.601 g, Sd1=0.179 g.
      (6) RESPONSE MODIFICATION COEFFICIENT: R = 3.0
      (6) IMPORTANCE FACTOR: I = 1.0.
   (E) SNOW LOADS:
      (1) GROUND SNOW LOAD: Pg = 5 PSF.
      (2) EXPOSURE FACTOR: Ce = 1.0 (PARTIALLY EXPOSED).
      (3) THERMAL FACTOR: Ct = 1.2
      (4) IMPORTANCE FACTOR: I = 1.0
      (5) ROOF SNOW LOAD: Pf = 20.0 PSF

C. THE GENERAL STRUCTURAL NOTES AND REQUIREMENTS ON STRUCTURAL DRAWINGS SUPERSEDES ALL CONFLICTING SPECIFICATIONS.

D. THE SUBCONTRACTOR SHALL VERIFY ALL DIMENSIONS, ELEVATIONS, AND SITE CONDITIONS PRIOR TO STARTING WORK AND SHALL NOTIFY THE STRUCTURAL ENGINEER OF RECORD IMMEDIATELY OF ANY DISCREPANCIES. ANY OMISSIONS OR CONFLICTS BETWEEN THE VARIOUS ELEMENTS OF THE CONTRACT DRAWINGS AND/OR SPECIFICATIONS SHALL BE CLARIFIED BY THE STRUCTURAL ENGINEER OF RECORD PRIOR TO PROCEEDING WITH WORK.

E. SHOP DRAWINGS SHALL BE FURNISHED FOR REVIEW BEFORE ANY FABRICATION AND ERECTION IS STARTED. POORLY EXECUTED SHOP DRAWINGS SHALL BE REJECTED AND RESUBMITTED.

F. THE SUBCONTRACTOR SHALL BE RESPONSIBLE FOR PROVIDING SAFE AND ADEQUATE SHORING FOR ALL PARTS OF THE STRUCTURE DURING CONSTRUCTION.

G. ALL TRADES SHALL COORDINATE AND VERIFY ALL OPENINGS IN ROOF, WALLS, AND BEAM/JOISTS WITH THE GENERAL SUBCONTRACTOR.

H. THE GENERAL SUBCONTRACTOR SHALL BE RESPONSIBLE FOR FOUNDATIONS UNDER VAULTS/MECHANICAL EQUIPMENT AND SHALL COORDINATE SIZE AND LOCATION OF REQUIRED FOUNDATIONS WITH SUBCONTRACTORS.

I. ALL CONSTRUCTION AND QUALITY OF MATERIALS SHALL CONFORM TO THE REQUIREMENTS OF THE IBC 2006.

J. WHERE CONSTRUCTION DETAILS ARE NOT SHOWN OR NOTED FOR ANY PART OF THE WORK, SUCH DETAILS SHALL BE THE SAME AS FOR SIMILAR WORK SHOWN ON THE DRAWINGS.

K. THE SUBCONTRACTOR SHALL TAKE ALL NECESSARY PRECAUTIONS TO LOCATE AND PROTECT UNDERGROUND OR CONCEALED CONDUITS, PLUMBING, OR OTHER UTILITIES.

GENERAL MATERIAL REQUIREMENTS

A. CAST-IN-PLACE CONCRETE:
1. HARDROCK CONCRETE (UNIT WT. = 150 pcf)
   (A) fc' = 4000 psi @ 28 DAYS TYPE I/II (AIR ENTRAINED) – ALL EXTERIOR CONCRETE INCLUDING SIDEWALKS, SLABS, PADS, GUTTERS, AND RETAINING WALLS.
   (B) fc' = 4000 psi @ 28 DAYS TYPE I/II – ALL FOUNDATION CAST-IN-PLACE CONCRETE INCLUDING TURNDOWNS, SPOT FOOTINGS AND PEDESTALS.
2. STRUCTURAL CONCRETE AGGREGATE SHALL CONFORM TO ASTM C33 OF STANDARD WEIGHT.
3. ADMIXTURES MAY BE USED WITH PRIOR APPROVAL OF THE STR. ADMIXTURES USED TO INCREASE THE WORKABILITY OF THE CONCRETE SHALL NOT BE CONSIDERED TO REDUCE THE SPECIFIED MINIMUM CEMENT CONTENT (CALCIUM CHLORIDE SHALL NOT BE USED). CONCRETE SHALL NOT COME IN CONTACT WITH ALUMINUM.
4. TIE ALL INSERTS, ANCHOR BOLTS OR OTHER EMBEDDED ELEMENTS SECURELY IN PLACE PRIOR TO PLACEMENT OF CONCRETE.
5. MECHANICALLY VIBRATE ALL CONCRETE WHEN PLACED.

GENERAL MATERIAL REQUIREMENTS (CONT.)

B. REINFORCING STEEL:
1. ALL REINFORCING STEEL SHALL CONFORM TO ASTM A615 GRADE 60.
2. REINFORCING STEEL SHALL BE FABRICATED AND PLACED IN ACCORDANCE WITH THE BUILDING CODE REQUIREMENTS FOR REINFORCED CONCRETE (ACI 318-05) AND THE STANDARD MANUAL (ACI 315).
3. BAR SUPPORTS AND SPACERS FOR REBAR SHALL BE PROVIDED IN ACCORDANCE WITH ACI 315. CHAIRS WITH 22 ga. SAND PLATES SHALL BE PROVIDED FOR ALL REBAR IN SLAB-ON-GRADE.
4. WHERE LAPPED SPLICES IN REINFORCING OCCUR, THE MINIMUM LAP SHALL BE MADE AS FOLLOWS UNLESS NOTED OTHERWISE:
   (A) VERTICAL REINFORCING: 40 BAR DIA. OR 18" MINIMUM.
   (B) HORIZONTAL REINFORCING: 40 BAR DIA. OR 18" MINIMUM.
   (C) HORIZONTAL CORNER BARS: 40 BAR DIA. OR 18" MINIMUM.
5. CONCRETE COVER FOR REINFORCING SHALL BE AS FOLLOWS:
   (A) FOOTINGS: 3" FROM BOTTOM.
   (B) STEM WALLS: 2" FROM SIDES AND 2" FROM TOP AND BOTTOM.
   (C) SLAB-ON-GRADE: SHALL BE CENTERED WITHIN SLAB THICKNESS.
   (D) TURNDOWNS AND PEDESTALS: 1 1/2 FOR PRIMARY REINFORCING TIES, STIRRUPS AND SPIRALS.
6. THE SUBCONTRACTOR SHALL BE RESPONSIBLE TO SEE THAT ALL REBAR IS PROPERLY ALIGNED AND TIED IN PLACE BEFORE PLACING CONCRETE. ALL PEDESTAL, WALL DOWELS AND VERTICAL STEEL SHALL BE ACCURATELY LOCATED AND SECURED IN PLACE SO THAT IT REMAINS IN POSITION DURING THE PLACEMENT OF CONCRETE. ANY REBAR FOUND TO BE IMPROPERLY INSTALLED SHALL BE REMOVED AND RE-INSTALLED AT NO ADDITIONAL COST TO THE OWNER.
7. ALL HORIZONTAL REINFORCING IN TURNDOWNS, WALLS, AND BEAMS SHALL BE CONTINUOUS AROUND CORNERS OR HAVE CORNER BARS OF THE SAME SIZE AND SPACING AS THE HORIZONTAL BARS AND LAP A MINIMUM OF 40 BAR DIA. OR 18" MINIMUM.
8. FORM TIES SHALL BE EITHER OF THREADED OR SNAP OFF TYPE SO THAT NO METAL WILL BE LEFT WITHIN 1" OF THE SURFACE OF THE WALL. FOLLOWING REMOVAL OF THE FORM TIES, RECESSES ARE TO BE CAREFULLY FILLED AND POINTED WITH MORTAR.
9. SUBSTITUTION OF EXPANSION ANCHORS FOR EMBEDDED ANCHORS SHOWN ON DRAWINGS WILL NOT BE PERMITTED WITHOUT PRIOR APPROVAL OF THE STR.

C. STRUCTURAL AND MISCELLANEOUS STEEL:
1. ALL STRUCTURAL STEEL MEMBERS SUCH AS COLUMNS, BEAMS, GIRTS, AND BRACES SHALL BE ASTM A992 GRADE 50. MISCELLANEOUS STEEL ITEMS SHALL BE ASTM A36. STEEL TUBES SHALL ASTM A36. STEEL TUBES SHALL BE ASTM A500, GRADE B.
2. STEEL BEAMS SHALL BE CONCENTRIC WITH COLUMNS.
3. THE SUBCONTRACTOR SHALL BE RESPONSIBLE FOR CHECKING THE ARCHITECTURAL DRAWINGS FOR ALL MISCELLANEOUS STEEL.
4. BOLTS SHALL CONFORM TO ASTM A325 TENSION CONTROL BOLTS, UNLESS NOTED OTHERWISE, WITH SIZES AS SHOWN ON THE DRAWINGS. ANCHOR BOLTS EMBEDDED IN CONCRETE SHALL BE ASTM 307 BOLTS OR A36 THREADED BARS. ALL BOLT HOLES SHALL BE 1/32" TO 1/16" OVERSIZED.
5. ALL WELDING SHALL BE DONE BY CERTIFIED WELDERS AND SHALL BE IN ACCORDANCE WITH THE LATEST STANDARD OF THE AWS AND AISC. INSPECT ALL WELDING IN ACCORDANCE WITH THE STANDARDS.
6. ALL FIELD WELDS SHALL BE VISUALLY INSPECTED. ALL WELDS WHICH ARE NOT ACCEPTABLE FROM VISUAL INSPECTION SHALL BE INSPECTED 100% BY RADIOGRAPHIC OR ULTRASONIC METHODS.
7. NO OPENINGS SHALL BE CUT IN STRUCTURAL MEMBERS UNLESS SHOWN ON THE CONTRACT DRAWINGS.

FOUNDATION NOTES

A. DESIGN FOUNDATION BEARING PRESSURE (NET) 2000 PSF DL+LL+LAT
B. FOR COMPACTED FILL SOILS AND EXCAVATION REQUIREMENTS SEE THE GEOTECHNICAL REPORT BY GEO-TEST DATED JUNE 11, 2007
C. SHALLOW SPREAD FOOTINGS GRADING PROCEDURES:
1. OVER EXCAVATE THE BEARING SURFACES 3 FEET BELOW FOOTING BEARING ELEVATION AND 3 FEET BEYOND EDGES OF FOOTING
2. COMPACT THE EXPOSED CUT SURFACE.
3. BRING THE SITE TO DESIGN GRADE IN 8 TO 12 INCH LIFTS, COMPACTED TO 95 PERCENT OF MAXIMUM DENSITY.
D. REINFORCEMENT SHALL BE PLACED MID-DEPTH OF SLABS-ON-GRADE, UNLESS NOTED OTHERWISE.
F. FLOOR SLAB CONSTRUCTION JOINTS (C.J.) SHALL BE PLACED AS REQUIRED BY CONSTRUCTION.
G. FLOOR SLAB ISOLATION JOINTS SHALL BE 30# FELT, UNLESS NOTED OTHERWISE.
H. FOR CONSTRUCTION JOINT AND CONTROL JOINT (WEAKENED PLANE) DETAILS, SEE TYPICAL DETAILS THIS SHEET.
I. CONCRETE FLOOR SLAB ON GRADE SHALL BE PLACED IN LANES. SPACING OF JOINTS SHALL BE AS DETERMINED BY CONSTRUCTION.
J. CHAMFER EXPOSED EDGES OF CONCRETE 3/4", UNLESS NOTED OTHERWISE.
K. SITE GRADING AND EARTHWORK:
1. BACKFILLS:
   ANY BACKFILL SHALL BE COMPACTED TO AT LEAST 95 PERCENT OF MAXIMUM DENSITY.
2. SITE DRAINAGE:
   POSITIVE SURFACE DRAINAGE AWAY FROM BOTH EXISTING STRUCTURES AND NEW FOUNDATION EXCAVATIONS SHALL BE PROVIDED DURING CONSTRUCTION.

STRUCTURAL SHOP DRAWINGS

A. THE SUBCONTRACTOR SHALL SUBMIT SHOP DRAWINGS AS PER THE SPECIFICATIONS AND THE FOLLOWING LIST:
1. CONCRETE MIX DESIGN.
2. CONCRETE REINFORCEMENT LAYOUT.
3. STRUCTURAL STEEL.
C. 4. PRE-ENGINEERED METAL BUILDINGS DRAWINGS AND CALCULATIONS.
5. EXPANSION ANCHOR CUT SHEETS.
6. ANCHOR BOLTS.
D. 7. SOIL TESTING.

B. ALL SHOP DRAWINGS SUBMITTED TO THE STR FOR REVIEW SHALL BE STAMPED AND SIGNED BY THE SUBCONTRACTOR INDICATING THAT THE SUBCONTRACTOR HAS FOUND THEM TO BE IN ACCORDANCE WITH THE CONTRACT DOCUMENTS AND THAT PROPER PROVISIONS HAVE BEEN MADE TO ACCOMMODATE ALL ABUTTING WORK. FABRICATION SHALL NOT BEGIN UNTIL THE SUBCONTRACTOR HAS RECEIVED SHOP DRAWINGS THAT HAVE BEEN REVIEWED, STAMPED AND SIGNED BY THE STR.

A. THE STR WILL REVIEW THE SHOP DRAWING SUBMITTAL FOR GENERAL CONFORMANCE WITH THE DESIGN CONCEPT OF THE PROJECT AND CONTRACT DOCUMENTS.

THE SUBCONTRACTOR IS RESPONSIBLE FOR CONFIRMING AND CORRELATING ALL QUANTITIES AND DIMENSIONS, SELECTING FABRICATION PROCESSES AND TECHNIQUES OF CONSTRUCTION, COORDINATING THE CONTRACTORS WORK AND THAT OF OTHER TRADES AND PERFORMING THE CONSTRUCTION IN A SATISFACTORY MANNER.

SPECIAL INSPECTION

PROVIDE SPECIAL INSPECTION IN ACCORDANCE WITH CHAPTER 17 OF THE 2006 IBC AND AS FOLLOWS:
1. CONCRETE STRENGTH.
2. CAST-IN-PLACE CONCRETE.
3. CONCRETE REINFORCEMENT.
4. STRUCTURAL STEEL.
5. STRUCTURAL STEEL BOLTS.
6. FIELD WELDING.
7. SOILS.

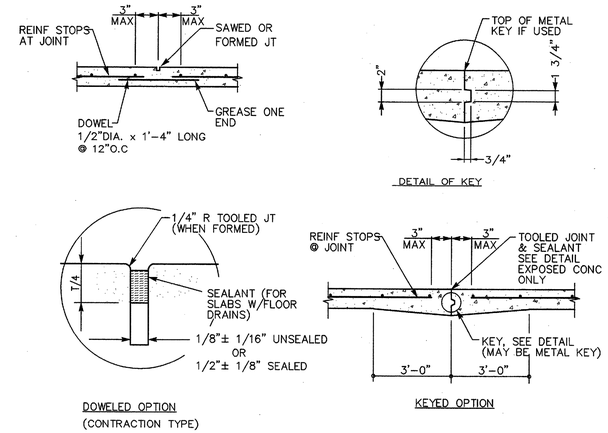

TYPICAL SLAB-ON-GRADE CONSTRUCTION/CONTROL JOINT DETAILS

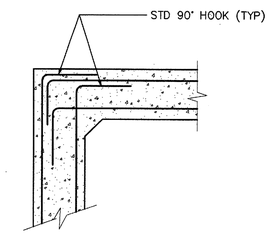

NOTES:
1. REINFORCING SHOWN APPLIES TO HORIZONTAL BARS.

TYPICAL CORNER DETAIL

AS-BUILT INFORMATION: CONTRACTOR / WORK STAKED BY / WORK INSPECTED BY / ACCEPTANCE / FIELD VERIFICATION BY / DRAWINGS CORRECTED BY — DATE
MICRO-FILM INFORMATION: RECORDED BY — DATE; NO. — DATE

BENCH MARKS

SURVEY INFORMATION
FIELD NOTES

NO.	BY	DATE

ENGINEER'S SEAL

NO.	DATE	REMARKS

REVISIONS

DESIGN: DESIGNED BY — DATE; DRAWN BY — DATE; CHECKED BY — DATE

DMJM DESIGN | AECOM
201 THIRD STREET NW, SUITE 600
ALBUQUERQUE, NEW MEXICO 87102

CITY OF ALBUQUERQUE
DEPARTMENT OF MUNICIPAL DEVELOPMENT

7 BAR LOOP PARK & RIDE
STRUCTURAL GENERAL NOTES

DESIGN REVIEW COMMITTEE: APPROVED DEC 24 2007 DESIGN REVIEW COMMITTEE
CITY ENGINEER APPROVAL: APPROVED DEC 24 2007 CITY ENGINEER
LAST DESIGN UPDATE — MO./DAY/YR. — MO./DAY/YR.

CITY PROJECT NO.	ZONE MAP NO.	SHEET	OF
6065.03	A – 13	A7	A7

P:_DESIGN\COA-AE\Bus Shelters\500 CAD\A\Sheet\A7.dwg
Mon, 26-Nov-2007 – 2:15:pm, Plotted by: GALLEGOSA

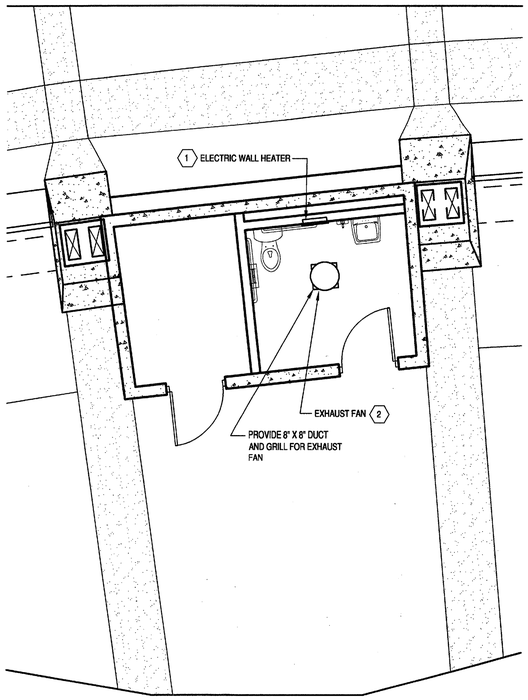

HEATING AND EXHAUST PLAN
SCALE: 1/4"=1'-0"

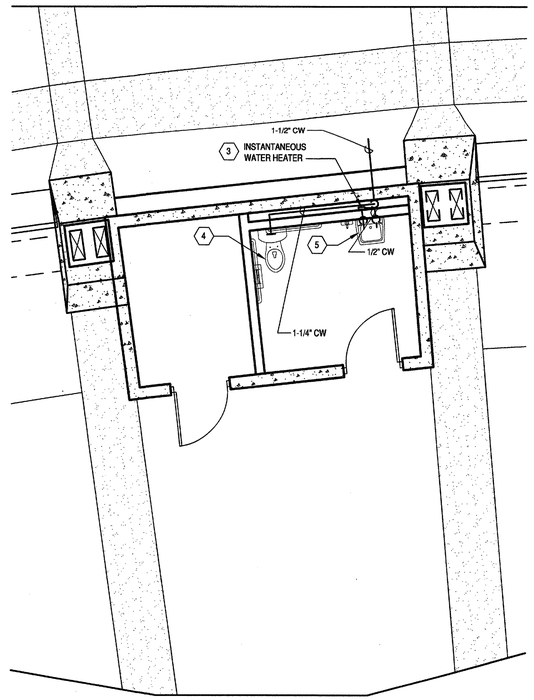

POTABLE WATER PLAN
SCALE: 1/4"=1'-0"

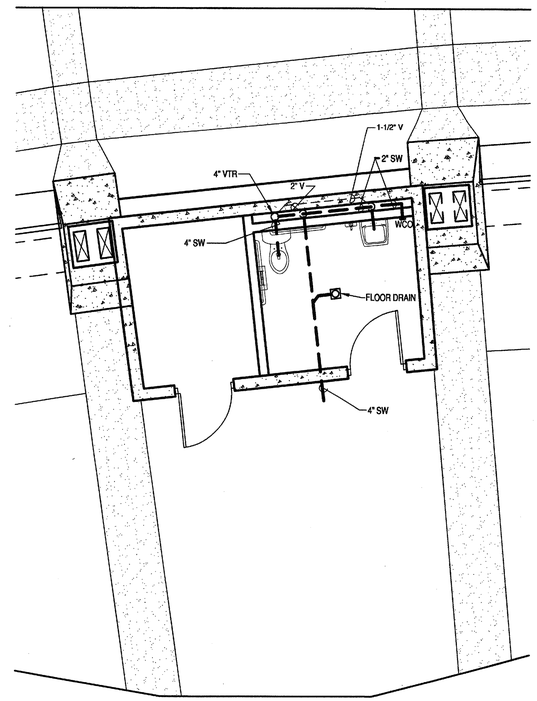

SEWAGE AND VENT PLAN
SCALE: 1/4"=1'-0"

GENERAL NOTES

1. EQUIVALENT PRODUCTS MAY BE SUBSTITUTED FOR ITEMS SPECIFIED WITH PRIOR APPROVAL OF THE PROJECT MANAGER.
2. INSTALLATION OF ALL PLUMBING FIXTURES TO BE ADA COMPLIANT.

KEYED NOTES ⬡

1. ELECTRIC UNIT HEATER AND THERMOSTAT: QMARK LFK304 FAN FORCED WALL HEATER WITH BUILT-IN THERMAL CUTOUT OR EQUAL. INTEGRAL DOUBLE POLE THERMOSTAT AND THERMAL OVERHEAT PROTECTION OR EQUAL. 240V, 3000W, 12.5A.
2. EXHAUST FAN: GREENHECK G-70-D DIRECT DRIVE EXHAUSTER WITH THERMAL OVERLOAD PROTECTION OR EQUAL. 274 CFM @ .25" SP, 115V, 1/30 HP, 1550 RPM. PROVIDE ALL PENETRATIONS, CURB (GREENHECK MODEL GPI) AND SUPPORT, ETC. FOR A COMPLETE OPERATIONAL SYSTEM. CONNECT EXHAUST FAN SWITCH TO ROOM LIGHT SWITCH.
3. INSTANTANEOUS WATER HEATER: EEMAX SP-35, 240V, 3500W, 14.6A OR EQUAL. DELIVERS A 0.5GPM FLOW WITH A 48°F TEMPERATURE RISE. INSTALL UNIT UNDER SINK PER MANUFACTURER INSTRUCTIONS.
4. KOHLER WATER CLOSET DEVONSHIRE K-3503 COMFORT KING.
5. KOHLER K-2035-1 WALL-MOUNT LAVATORY WITH K-14616-4 CABRIOLE SINGLE-CONTROL LAVATORY FAUCET.

PLUMBING ABBREVIATIONS

CW	DOMESTIC COLD WATER PIPE
HW	DOMESTIC HOT WATER PIPE
FD	FLOOR DRAIN
SW	SANITARY WASTE DRAINAGE
V	VENT PIPE
VTR	VENT THROUGH ROOF
WCO	WALL CLEANOUT

AS-BUILT INFORMATION
CONTRACTOR / DATE
WORK STAKED BY / DATE
INSPECTOR'S ACCEPTANCE BY / DATE
FIELD VERIFICATION BY / DATE
DRAWINGS CORRECTED BY / DATE
MICRO-FILM INFORMATION
RECORDED BY / DATE
NO. / DATE

BENCH MARKS

SURVEY INFORMATION
FIELD NOTES

NO.	BY	DATE

ENGINEER'S SEAL

NO.	DATE	REMARKS	BY
		REVISIONS	

DESIGN
DESIGNED BY STEVE BAHLING — DATE
DRAWN BY STEVE BAHLING — DATE
CHECKED BY — DATE

DMJM DESIGN | AECOM
201 THIRD STREET NW, SUITE 600
ALBUQUERQUE, NEW MEXICO 87102

CITY OF ALBUQUERQUE
DEPARTMENT OF MUNICIPAL DEVELOPMENT

7 BAR LOOP PARK & RIDE
MECHANICAL AND PLUMBING PLAN

DESIGN REVIEW COMMITTEE: APPROVED DEC 24 2007 DESIGN REVIEW COMMITTEE
CITY ENGINEER APPROVAL: APPROVED DEC 24 2007 CITY ENGINEER
LAST DESIGN UPDATE — MO./DAY/YR. — MO./DAY/YR.

CITY PROJECT NO.	ZONE MAP NO.	SHEET	OF
6065.03	A - 13	M1	M1

P:_DESIGN\COA-AE\Bus Shelters\500 CAD\M\Sheet\P1.dwg
Mon, 26-Nov-2007 - 2:15:pm, Plotted by: GALLEGOSA

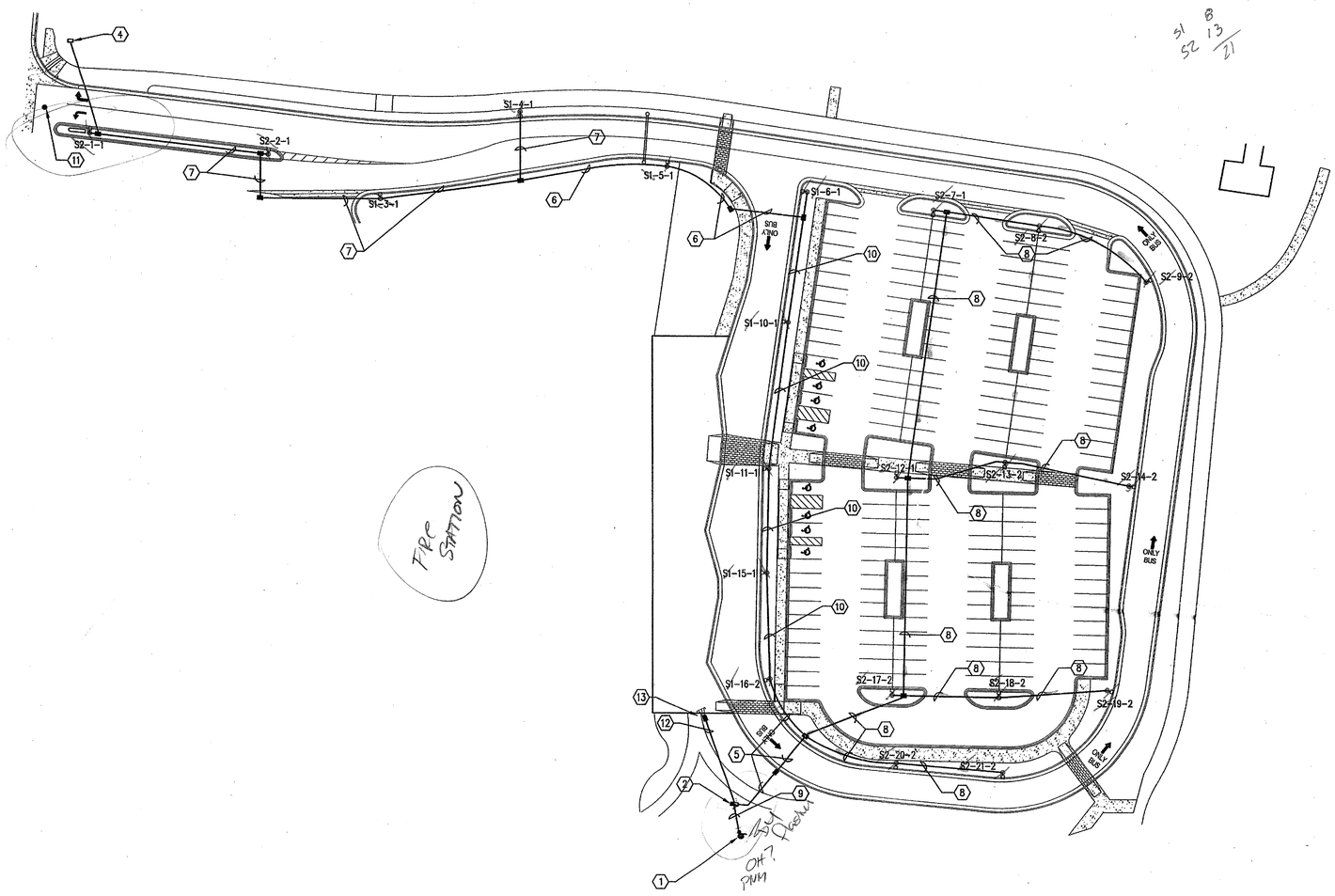

ELECTRICAL SITE PLAN

1 / E1

SCALE: 1"=40'-0"

0 20' 40' 80' 120'

1" = 40'

GENERAL NOTES

1. ALL CONDUCTORS TO BE TYPE THHN/THWN ALL CONDUITS TO BE SCHEDULE 40 PVC EXCEPT CONDUITS UNDER DRIVE LANES TO BE SCHEDULE 80 PVC UNLESS OTHERWISE NOTED.
2. ALL TRENCHING SHALL BE PER PNM STANDARDS AND TRENCHING DETAIL, SHEET E2.
3. SEE SHEET E2 FOR DETAILS AND FIXTURE SCHEDULE AND SHEET E3 FOR WIRING DIAGRAMS AND DETAILS.
4. CONDUCTOR SPLICES SHALL BE PERMITTED ONLY INSIDE OF CABINETS, POLE BASES WITH WIRING ACCESS AND APPROVED PULL BOXES. THE ENTIRE SPLICE SHALL BE WEATHERPROOF.
5. ALL LIGHTING CONTROL CABINETS AND ELECTRICAL CONTACTORS SHALL BE TASCO OR APPROVED EQUAL AND CONFORM TO CITY OF ALBUQUERQUE AND PNM STANDARDS.
6. TERMINATE LIGHTING FEED CONDUCTORS TO LOAD CONDUCTORS AT LIGHTING STANDARDS WITH IN-LINE FUSE HOLDERS WITH APPROPRIATE FUSING AND COPPER CRIMP TERMINALS. THE SPLICE CONNECTOR SHALL ENCLOSE THE FUSE COMPLETELY AND SHALL BE WEATHERPROOF.
7. THE CONTRACTOR SHALL PROVIDE AND INSTALL ALL ELECTRICAL SYSTEMS IN ACCORDANCE WITH THE PLANS AND ASSOCIATED NOTES, NATIONAL ELECTRICAL CODE, STATE AND LOCAL CODES, PNM STANDARDS AND IN A WORKMAN LIKE MANNER.
8. THE CONTRACTOR SHALL INCLUDE IN HIS BID THE COSTS OF ALL PERMITS, TESTS AND INSPECTIONS, AND VISIT THE SITE OF WORK PRIOR TO SUBMITTING BID.
9. THE CONTRACTOR SHALL GUARANTEE ALL WORK AND MATERIAL FOR A PERIOD OF ONE YEAR AFTER DATE OF ACCEPTANCE.
10. A SET OF MARKED UP PRINTS SHALL BE PREPARED SHOWING ALL CHANGES MADE DURING CONSTRUCTION AND TURNED OVER TO THE OWNER AT THE END OF THE JOB. ALL CHANGES MUST HAVE PRIOR APPROVAL FROM THE OWNER.
11. ANY DISCREPANCY BETWEEN MATERIAL DESCRIPTION AND CATALOG NUMBER SHALL BE BROUGHT TO THE ENGINEERS OR OWNERS ATTENTION IMMEDIATELY.
12. THE SAME COLOR CODING SHALL BE MAINTAINED THROUGHOUT ALL CIRCUITS.

KEYED NOTES

1. INSTALL NEW RISER POLE AND PRIMARY TO NEW PEDESTAL METER AND LIGHTING CONTROL CABINET PER PNM STANDARDS. COORDINATE LOCATION OF RISER POLE AND METER WITH PNM.
2. INSTALL PEDESTAL METER AND LIGHTING CONTROL CABINET PER PNM STANDARDS AND DETAILS, SHEET E3. METER PEDESTAL AND LIGHTING CONTROL CABINET TO BE NEMA 3R AND/OR NEMA 12 OR APPROVED EQUAL.
3. INSTALL J-BOX, GFCI RECEPTACLE WITH IN-USE COVER FOR BFP HEAT SOURCE, AND CONNECT TO IRRIGATION CONTROLLER ON INTERIOR OF PEDESTAL.
4. 1" CONDUIT WITH 2 #10 & 1 #10 GROUND, IRRIGATION CONTROLLER CIRCUIT.
5. 1-1/2" CONDUIT WITH 2#4 & 1#4 GROUND, LIGHTING CIRCUIT #1, 2 #8, LIGHTING CIRCUIT #2; 2 #10 IRRIGATION CONTROLLER CIRCUIT.
6. 1" CONDUIT WITH 2 #6 & 1 #6 GROUND, LIGHTING CIRCUIT #1; 2 #10 IRRIGATION CONTROLLER CIRCUIT.
7. 1" CONDUIT WITH 2 #8 & 1 #6 GROUND, LIGHTING CIRCUIT #1; 2 #10 IRRIGATION CONTROLLER CIRCUIT.
8. 1" CONDUIT WITH 2 #8 & 1 #6 GROUND, LIGHTING CIRCUIT #2.
9. 1-1/2" GRS CONDUIT WITH 3 #1 COPPER, THHN/THWN CONDUCTORS.
10. 1-1/4" CONDUIT WITH 2 #4 & 1 #4 GROUND, LIGHTING CIRCUIT #1; 2 #10 IRRIGATION CONTROLLER CIRCUIT.
11. EXISTING END POLE FOR OVERHEAD 12.47KV POWER LINE, TELEPHONE AND CATV. THE CONTRACTOR SHALL RELOCATE EXISTING POLE AND RECONFIGURE EXISTING UTILITIES (OVERHEAD AND UNDERGROUND) AS REQUIRED TO ACCOMMODATE ENTRANCE DRIVE. THE CONTRACTOR SHALL FIELD VERIFY ALL UTILITIES/WORK AND COORDINATE ALL WORK WITH THE LOCAL UTILITIES.
12. 1" CONDUIT WITH 2 #10 (SHELTER LIGHTING), 2 #10 (SECURITY SYSTEM), 2 #10 (GENERAL POWER RECEPTACLES) & 1 #10 GROUND.
13. EXTEND TWO 3/4" CONDUITS TO CONNECT TO SHELTER LIGHTING, AND SECURITY SYSTEM RECEPTACLE CIRCUITS. COORDINATE EXTENSIONS WITH CANOPY CONSTRUCTION.

LEGEND

LIGHTING FIXTURE/STANDARD PER FIXTURE SCHEDULE WITH FIXTURE TYPE, POLE NUMBER AND CIRCUIT NUMBER SHOWN.

S1-1-1
- CIRCUIT NUMBER
- POLE NUMBER (OR N/A)
- FIXTURE TYPE

UNDERGROUND CONDUIT RUN

HAND HOLE, FIBER REINFORCED POLYMER CONCRETE, 13"x 24" . SEE STANDARD DRAWING 2021 PER CITY OF ALBUQUERQUE.

PEDESTAL METER & LIGHTING CONTROL CABINET

SERVICE RISER POLE PER PNM STANDARDS

BHI JOB NO. 080024

AS-BUILT INFORMATION

CONTRACTOR	DATE
WORK STAKED BY	DATE
INSPECTOR'S ACCEPTANCE BY	DATE
VERIFICATION BY	DATE
CONNECTED BY	DATE
MICRO-FILM INFORMATION	
RECORDED BY	DATE
NO.	DATE

BENCH MARKS

SURVEY INFORMATION

FIELD NOTES

NO.	BY	DATE

ENGINEER'S SEAL

NEW MEXICO REGISTERED PROFESSIONAL ENGINEER MATTHEW R. THOMPSON 13893 11-13-07

NO.	DATE	REMARKS	BY
		REVISIONS	
		DESIGN	

DESIGNED BY RGG DATE11/2007

DRAWN BY RGG DATE11/2007

CHECKED BY MRT DATE11/2007

Bohannan ▲ Huston

Courtyard I 7500 Jefferson St. NE Albuquerque, NM 87109-4335

ENGINEERING ▲ SPATIAL DATA ▲ ADVANCED TECHNOLOGIES

CITY OF ALBUQUERQUE
DEPARTMENT OF MUNICIPAL DEVELOPMENT

7 BAR LOOP PARK & RIDE
ELECTRICAL SITE PLAN

DESIGN REVIEW COMMITTEE: APPROVED DEC 24 2007 DESIGN REVIEW COMMITTEE

CITY ENGINEER APPROVAL: APPROVED DEC 24 2007 CITY ENGINEER

LAST DESIGN UPDATE | MO./DAY/YR. | MO./DAY/YR.

CITY PROJECT NO.	ZONE MAP NO.	SHEET	OF
6065.01	A – 13	E1	E4

H:\BHILasCruces2\080024CAbqParkRide\Construction Drawings\Plans\080024-E1 Site LOR1.dwg
Thu, 15-Nov-2007 - 2:19pm, Plotted by: LMILLER

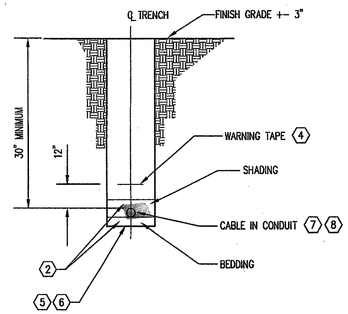

BACKHOE OR TRENCHER INSTALLATION:

THIS BURIAL METHOD MUST BE USED FOR THE ENTIRE TRENCH LENGTH, FROM EQUIPMENT TO EQUIPMENT.

2 / E2 **TRENCH DETAIL** 1 3

NOT TO SCALE

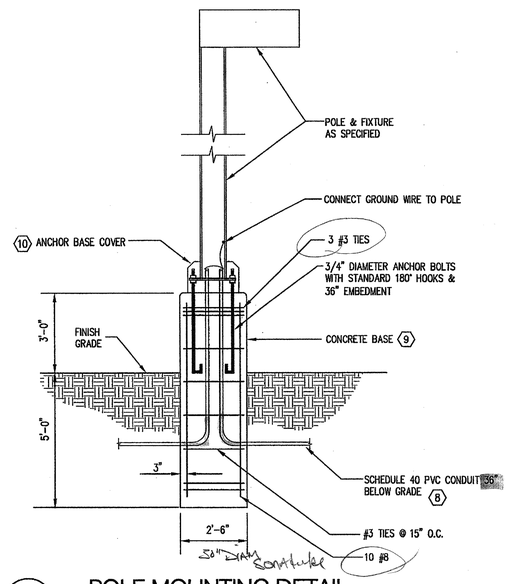

4 / E2 **POLE MOUNTING DETAIL**

NOT TO SCALE

KEYED NOTES (⬡)

1. WHERE APPLICABLE, COMPACTION IN CITY OR STATE RIGHT OF WAY SHALL MEET OR EXCEED MINIMUM REQUIREMENTS. IF ADDITIONAL COMPACTION IS REQUIRED, A NON REFUNDABLE CONTRACT MUST BE EXECUTED.
2. SHADING AND BEDDING MATERIAL TO BE TYPE IV, CLASS 1 FOR DIRECT BURIED CABLE AND TYPE IV, CLASS 2 FOR CABLE IN CONDUIT. TYPE III MATERIAL IS SUITABLE FOR EITHER TYPE OF INSTALLATION. REFER TO PNM STANDARD DS-10-12.4 FOR FILL MATERIAL REQUIREMENTS.
3. LATEST OSHA TRENCH SAFETY REQUIREMENTS MUST BE STRICTLY OBSERVED.
4. WARNING TAPE SHALL BE PLACED A MINIMUM OF 12" ABOVE THE TOP OF CONDUIT.
5. TRENCH BOTTOM SHALL BE SMOOTH, FLAT AND WITHOUT SURFACE IRREGULARITIES, AND SHALL BE FREE AND CLEAR OF DEBRIS OR ANY ORGANIC MATERIAL. IF TRENCH BOTTOM CANNOT, WITH REASONABLE EFFORT, BE MADE WITHOUT SURFACE IRREGULARITIES, THAN A SUFFICIENT AMOUNT OF BEDDING MATERIAL AS REQUIRED BY NOTE 2, SHALL BE INSTALLED TO PROVIDE THE REQUIRED SURFACE. IN NO EVENT SHALL THE TOP OF CONDUIT BE LESS THAN 24" BELOW FINISH GRADE.
6. MAXIMUM CHANGE IN THE TRENCH BOTTOM ELEVATION SHALL NOT EXCEED 1 FT OVER A 10 FT LENGTH. BEDDING MATERIAL AS REQUIRED BY NOTE 2, MAY BE USED TO MEET THIS REQUIREMENT.
7. CABLE IN CONDUIT SHALL NOT BE USED IN ANY CABLE RUN IN COMBINATION WITH DIRECT BURIED CABLE.
8. SCHEDULE 40 PVC ELBOWS AT ANGLE CHANGES LESS THAN 45 DEG., GALVANIZED METAL ELBOWS AT ANGLE CHANGES OF 45 DEG. OR GREATER.
9. SEE ARCHITECTURAL FOR ADDITIONAL REQUIREMENTS.
10. BASE PLATE AND BOLT PATTERN PER MANUFACTURER'S RECOMMENDATIONS.

FIXTURE SCHEDULE

SYMBOL	ARRANGEMENT	DESCRIPTION
S1	SINGLE	240V/250W METAL HALIDE LUMINAIRE & POLE SELUX #QHO-R2-1-H250-SV-240 LUMINAIRE WITH #AT635-25-SV POLE
S2	SINGLE	240V/250W METAL HALIDE LUMINAIRE & POLE SELUX #QHO-R5-1-H250-SV-240 LUMINAIRE WITH #AT635-25-SV POLE

BHI JOB NO. 080024

AS-BUILT INFORMATION

CONTRACTOR — DATE
STAKED BY — DATE
INSPECTOR'S ACCEPTANCE BY — DATE
FIELD VERIFICATION BY — DATE
DRAWINGS CORRECTED BY — DATE

MICRO-FILM INFORMATION

RECORDED BY — DATE
NO. — DATE

BENCH MARKS

SURVEY INFORMATION

FIELD NOTES

NO.	BY	DATE

ENGINEER'S SEAL

NEW MEXICO 13868 MATTHEW R. THOMPSON REGISTERED PROFESSIONAL ENGINEER

11-13-07

NO.	DATE	REMARKS	BY
		REVISIONS	
		DESIGN	

DESIGNED BY RGG — DATE 11/2007
DRAWN BY RGG — DATE 11/2007
CHECKED BY MRT — DATE 11/2007

Bohannan ▲ Huston

Courtyard I 7500 Jefferson St. NE Albuquerque, NM 87109-4335

ENGINEERING ▲ SPATIAL DATA ▲ ADVANCED TECHNOLOGIES

CITY OF ALBUQUERQUE
DEPARTMENT OF MUNICIPAL DEVELOPMENT

7 BAR LOOP PARK & RIDE
SCHEDULES AND DETAILS.

DESIGN REVIEW COMMITTEE — APPROVED DEC 24 2007 DESIGN REVIEW COMMITTEE

CITY ENGINEER APPROVAL — DEC 24 2007 CITY ENGINEER

LAST DESIGN UPDATE — MO./DAY/YR. — MO./DAY/YR.

CITY PROJECT NO. 6065.01 | ZONE MAP NO. A – 13 | SHEET E2 OF E4

H:\BHI_LosCruces2\080024CAbqParkRide\Construction Drawings\Plans\080024-E2 Details.dwg
Thu, 15-Nov-2007 - 2:22:pm, Plotted by: LMILLER

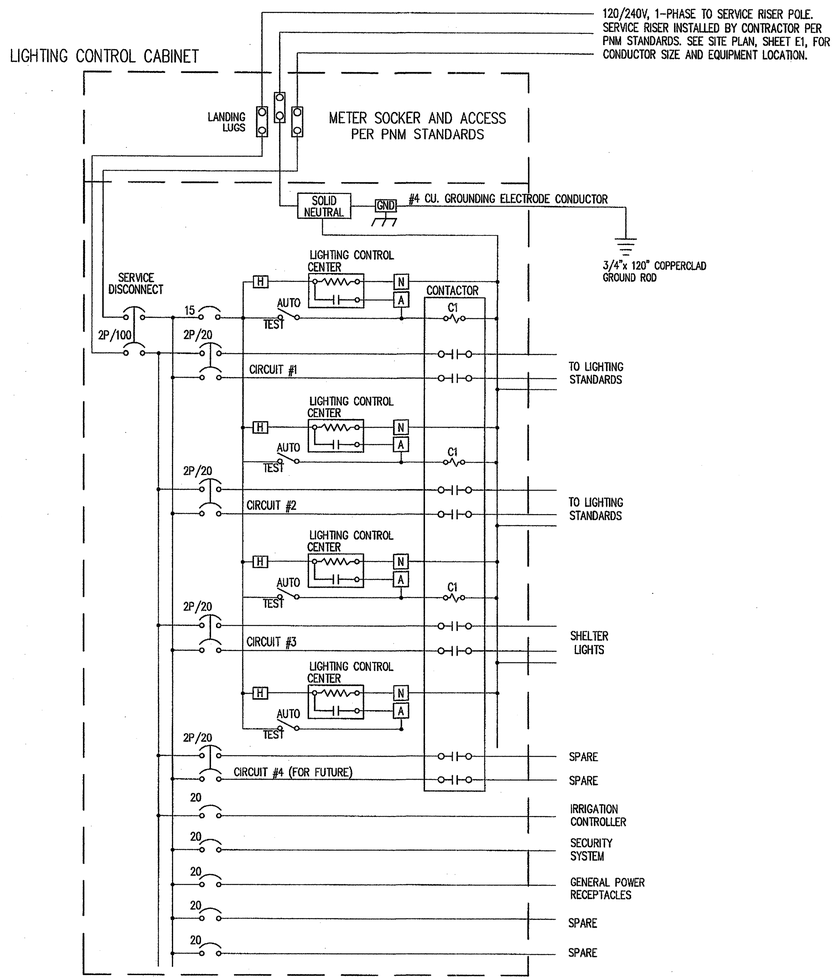

4 / E3 SERVICE EQUIPMENT WIRING DIAGRAM

NOT TO SCALE

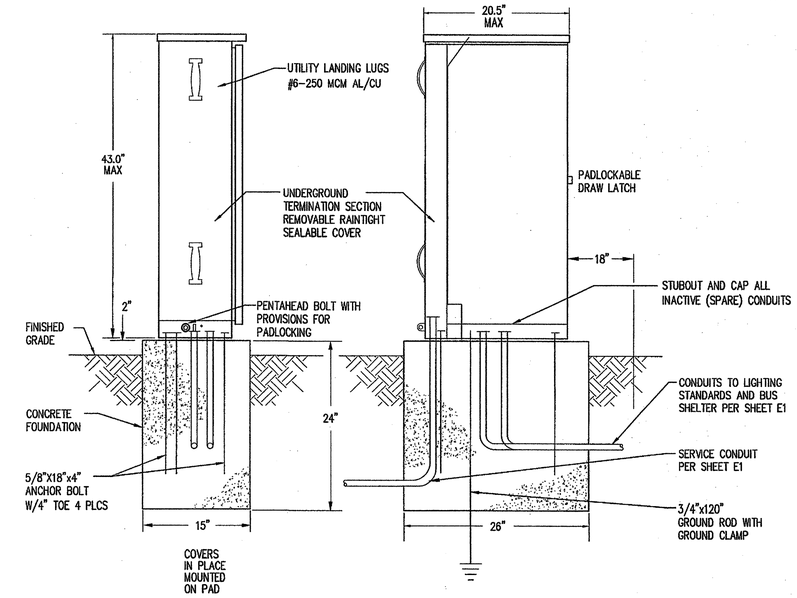

2 / E3 LEFT ELEVATION

NOT TO SCALE

3 / E3 FRONT ELEVATION

NOT TO SCALE

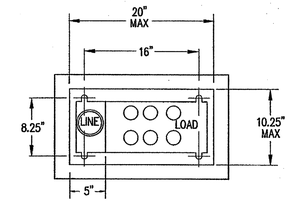

1 / E3 BASE PLAN

NOT TO SCALE

CONTROL CABINET CONSTRUCTION NOTES

1. CONTROL CABINET SHALL BE UL LISTED "INDUSTRIAL CONTROL PANEL" PER UL 508.
2. CONTROL CABINET SHALL MEET THE ELECTRIC UTILITY SERVICE EQUIPMENT REQUIREMENTS COMMITTEE (EUSERC) GUIDELINES.
3. CONSTRUCTION SHALL BE NEMA 3R AND 12, RAIN TIGHT AND DUST TIGHT. ELECTRICALLY WELDED AND REINFORCED WHERE REQUIRED. ALL NUTS, BOLTS, SCREWS AND HINGES SHALL BE STAINLESS STEEL.
4. NUTS, BOLTS AND SCREWS SHALL NOT BE VISIBLE FROM OUTSIDE OF CABINET.
5. PHENOLIC NAMEPLATES SHALL BE PROVIDED AS REQUIRED.
6. CIRCUIT BREAKERS SHALL BE CABLE-IN, CABLE-OUT WITH LINE ON TOP AND LOAD ON THE BOTTOM. HANDLE POSITION: UP=ON, MIDDLE=TRIPPED, DOWN=OFF.
7. A PLASTIC COVERED WIRING DIAGRAM SHALL BE ATTACHED TO THE INSIDE OF THE FRONT DOOR.
8. CABINET SHALL BE FACTORY WIRED AND CONFORM TO REQUIRED NEMA STANDARDS.
9. ALL POWDER COATED CONTROL CABINETS SHALL HAVE A CORROSION RESISTANT COATING WHICH INCLUDES A FIVE STEP DIP TANK METAL PREPARATION PROCESS:
   A. ALKALINE CLEANER 160° F.
   B. CLEAR WATER RINSE.
   C. IRON PHOSPHATE APPLICATION 150° F.
   D. CLEAR WATER RINSE.
   E. INHIBITIVE RINSE TO SEAL PHOSPHATED SURFACES 120° F.
   FINISHED WITH AN ELECTROSTATICALLY APPLIED DRY POLYESTER POWDER COATING THEN BAKED AT 380° F TO CURE.
10. CONCRETE FOUNDATIONS FOR CONTROL CABINET INCLUDING EXCAVATION AND BACKFILL, CONCRETE, GROUND RODS AND ANCHOR BOLTS, COMPLETE IN PLACE, WILL BE CONSIDERED INCIDENTAL TO THE CONTROL CABINET.
11. LIGHTING CONTROL CENTER COMPLETE WITH PHOTO CELL AND 4 CIRCUIT 120V/24 HOUR/7 DAY TIME CLOCK TO HAVE MINIMUM 16 HOUR POWER OUTAGE CARRY OVER AND MANUAL BYPASS FOR EACH CIRCUIT. CIRCUITS TO BE CONFIGURED AS FOLLOWS:
   CIRCUIT #1 – PHOTO CONTROL ON/TIMED OFF
   CIRCUIT #2 – PHOTO CONTROL ON/PHOTO CONTROL OFF
   CIRCUIT #3 – TIMED ON/TIMED OFF
   CIRCUIT #4 – FOR FUTURE USE
12. CONNECT CONTACTOR TO CIRCUIT #1 AND SET FOR 11 PM SHUT-OFF. CONTROL CENTER TO BE AS MANUFACTURED BY INTERMATIC CORP. OR TORK.

CONSTRUCTION MATERIALS AND FINISH

- [x] 12 GA HD GALVANIZED SHEET STEEL
  - [x] POWDER COATED
- [ ] 14 GA #304 STAINLESS STEEL SHEET
  - [ ] POWDER COATED COLOR:
  - [ ] NATURAL
- [ ] 0.125" ALUMINUM SHEET
  - [ ] POWDER COATED COLOR:
  - [ ] NATURAL
  - [ ] ANODIZED

POWDER COAT COLORS

- [ ] WHITE
- [ ] RANCH GREEN
- [x] MINT GREEN
- [ ] OTHER _____
- [ ] CAMEL

PHOTO ELECTRIC CELL

- [ ] ON LIGHT POLE
- [x] IN SERVICE CABINET

GENERAL NOTES

1. ALL TRENCHING SHALL BE PER PNM STANDARDS AND TRENCHING DETAIL SHEET E2.
2. SEE SHEET E1 FOR ELECTRICAL SITE PLAN AND ADDITIONAL NOTES.
3. SEE SHEET E2 FOR DETAILS AND FIXTURE SCHEDULE.
4. GROUNDING SHALL CONFORM TO NEC ARTICLE 250.

BHI JOB NO. 080024

AS-BUILT INFORMATION: CONTRACTOR / DATE; REVIEWED BY / DATE; INSPECTOR'S ACCEPTANCE BY / DATE; FIELD VERIFICATION BY / DATE; DRAWINGS CORRECTED BY / DATE

MICRO-FILM INFORMATION: RECORDED BY / DATE; NO. / DATE

BENCH MARKS

SURVEY INFORMATION

FIELD NOTES

NO.	BY	DATE

ENGINEER'S SEAL

MATTHEW R. THOMPSON NEW MEXICO 13868 REGISTERED PROFESSIONAL ENGINEER

NO.	DATE	REMARKS	BY
		REVISIONS	
		DESIGN	

DESIGNED BY RGG DATE 11/2007
DRAWN BY RGG DATE 11/2007
CHECKED BY MRT DATE 11/2007

Bohannan ▲ Huston
Courtyard I 7500 Jefferson St. NE Albuquerque, NM 87109-4335
ENGINEERING ▲ SPATIAL DATA ▲ ADVANCED TECHNOLOGIES

CITY OF ALBUQUERQUE
DEPARTMENT OF MUNICIPAL DEVELOPMENT

7 BAR LOOP PARK & RIDE
WIRING DIAGRAM AND SCHEDULES

DESIGN REVIEW COMMITTEE: APPROVED DEC 24 2007 DESIGN REVIEW COMMITTEE

CITY ENGINEER APPROVAL: APPROVED DEC 24 2007 CITY ENGINEER

LAST DESIGN UPDATE | MO./DAY/YR. | MO./DAY/YR.

CITY PROJECT NO. 6065.01 | ZONE MAP NO. A – 13 | SHEET E3 OF E4

H:\BHILosCruces2\080024CityofPartRide\Construction Drawings\Plans\080024-E3-Diagram.dwg
Thu, 15-Nov-2007 - 2:20pm, Plotted by: LMILLER

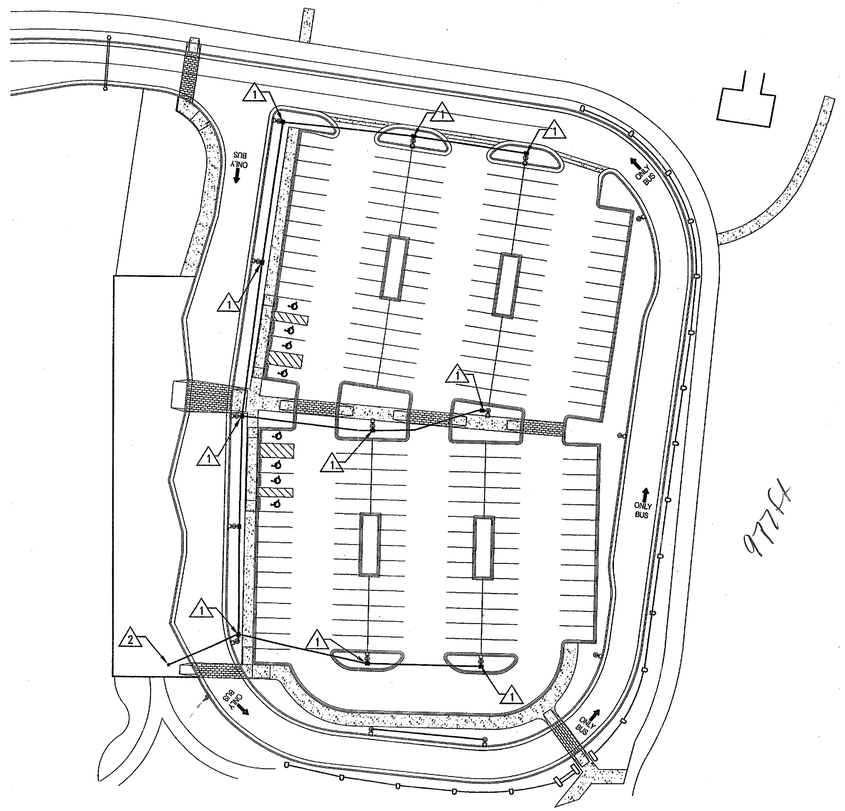

9774

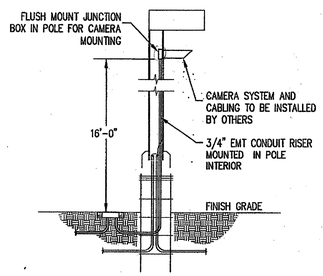

2 / E4 POLE MOUNTING DETAIL
NOT TO SCALE

SECURITY CONDUIT
SCALE: 1"=40'-0"

0 20' 40' 80' 120'
1" = 40'

LEGEND

1	12" x 8" x 6" Deep, WJB 120806, CROUSE HINDS WITH CONCRETE COLLAR
2	12" x 8" x 6" Deep, WSBF 120806, CROUSE HINDS, SIDEWALK TYPE
———	1" UNDERGROUND CONDUIT

BHI JOB NO. 080024

AS-BUILT INFORMATION
CONTRACTOR: DATE
WORK STAKED BY DATE
INSPECTOR'S ACCEPTANCE BY DATE
FIELD VERIFICATION BY DATE
DRAWINGS CORRECTED BY DATE
MICRO-FILM INFORMATION
RECORDED BY DATE
NO. DATE

BENCH MARKS

SURVEY INFORMATION
FIELD NOTES

NO.	BY	DATE

ENGINEER'S SEAL
MATTHEW R. THOMPSON NEW MEXICO 13868 REGISTERED PROFESSIONAL ENGINEER
12-5-07

NO.	DATE	REMARKS	BY
		REVISIONS	
		DESIGN	

DESIGNED BY RGG DATE 11/2007
DRAWN BY RGG DATE 11/2007
CHECKED BY MRT DATE 11/2007

Bohannan ▲ Huston
Consulting Engineers
7500 Jefferson St. NE Albuquerque, NM 87109-4335
ENGINEERING ▲ SPATIAL DATA ▲ ADVANCED TECHNOLOGIES

CITY OF ALBUQUERQUE
DEPARTMENT OF MUNICIPAL DEVELOPMENT

7 BAR LOOP PARK & RIDE
ELECTRICAL SITE PLAN

DESIGN REVIEW COMMITTEE: DEC 24 2007 DESIGN REVIEW COMM.
CITY ENGINEER APPROVAL: DEC 24 2007 CITY ENGINEER
LAST DESIGN UPDATE
MO./DAY/YR. MO./DAY/YR.

CITY PROJECT NO. 6065.01
ZONE MAP NO. A – 13
SHEET E4 OF E4

H:\BhillusCruces2\080024UbqParkRide\Construction Drawings\Plans\080024-E4-Security-Revised.dwg
Thu, 15-Nov-2007 - 2:21:pm, Plotted by: LMILLER

ALLSCAPE®

2930 South Fairview Street
Santa Ana, CA 92704
Phone: 714 668 3660
Fax: 714 668 1107
sales@allscape.net
http://www.alllighting.com

SP-10

Corridor

Walkways

Accent

General Lighting

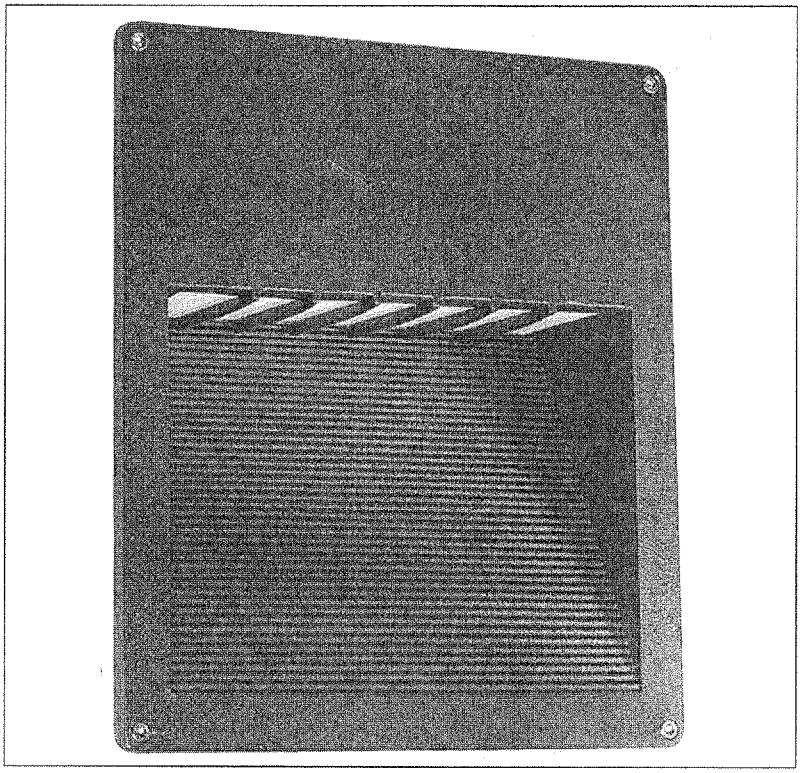

Specifications

ADA

Certifications The fixture shall be ETL and CETL listed for wet location and concrete pour. The fixture shall meet ADA requirements.

Lamp/Ballast Housing Die-cast aluminum with two 3/4" NPT conduit entrances for through-wiring capability.

Face Plate Die-cast aluminum, recessed with louvers, fastened to lamp/ballast housing with four stainless steel screws.

Lens Tempered clear glass sealed to face plate with silicone.

Lampholder Porcelain 4KV pulse rated medium base, for HID and Incandescent lamp source.

Reflector Highly specular Alzak®, aluminum.

Finish BK-BZ-WH-GR-GY-NA baked enamel standard, other colors available.

ALLSCAPE®

SP10

2930 South Fairview Street
Santa Ana, CA 92704
Phone: 714 668 3660
Fax: 714 668 1107
Email: sales@allscape.net

INSTALLATION SHEET

Safety, Warnings and Suggestions

[1] *Avoid* installing fixtures in locations where water collects and stands for prolonged periods.
[2] *Make* sure that electrical power is disconnected before any work is performed.
[3] *All* wiring and installation should meet local, state and national electrical codes.

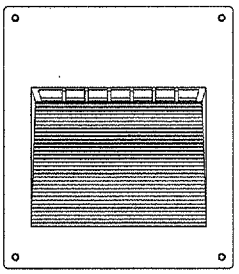

SP-10

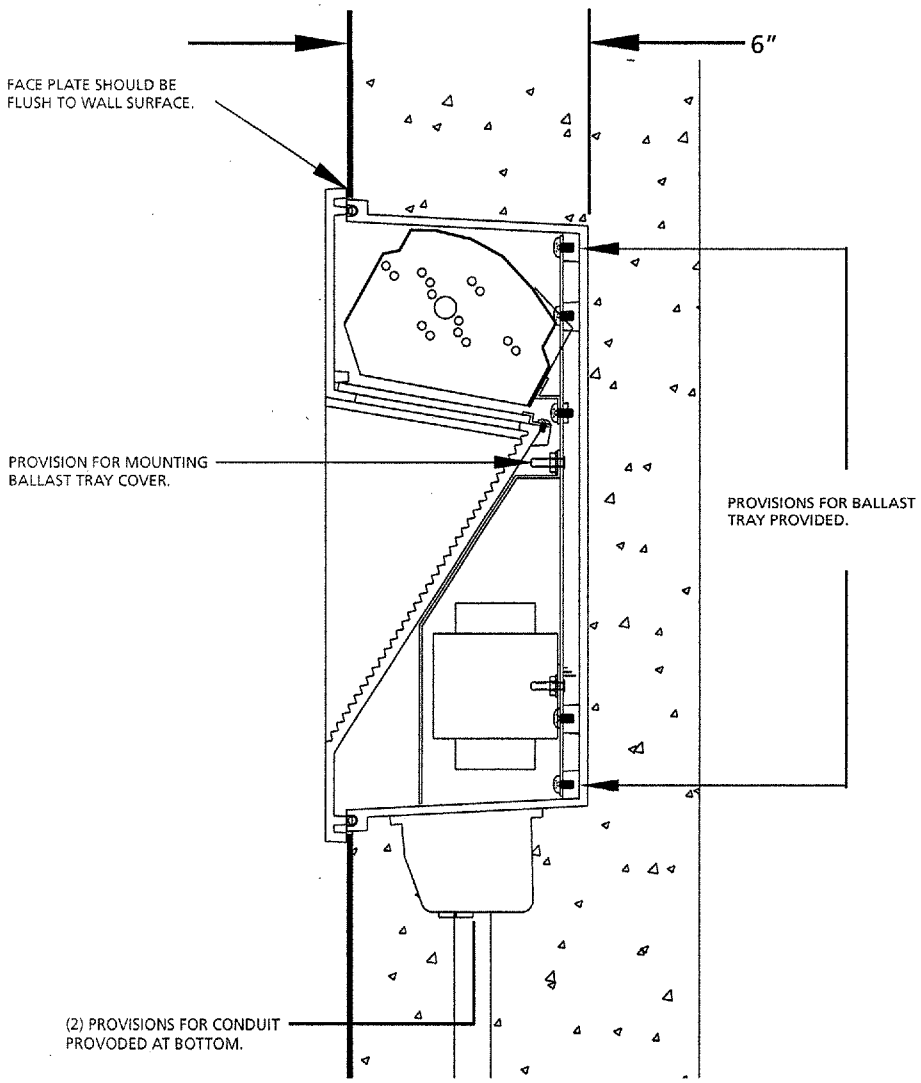

1. Remove face plate , internal reflector and internal ballast tray. Make sure all hardware is carefully saved until needed.

2. With back box by itself, connect conduit to the provisions on the bottom of the back box. See illustration for details.

3. Once the conduit has been connected, Secure back box to wall opening or any mounting provisions being used to hold box in place. Make sure that back box is flush to wall or to other mounting provision being used. See illustration for details.

4. After all preparations to wall have been finished, carefully clean out any dirt left inside of back box.

5. Install and secure ballast tray with hardware provided. Carefully make all necessary connection using UL listed connectors.

6. Install and secure ballast cover to ballast tray assembly with hardware provided. Make sure to install proper lamp source as designated on lamp label.

7. Install face plate onto back box by using screws provided. Adequately tighten all screws on faceplate to ensure a good seal all around gasket area. Once face plate has been tightened, Make sure it is flush to the mounting surface. See illustration for details.

© 2007 ALLSCAPE. All rights reserved.

Due to a program of continuous improvement, ALLSCAPE reserves the right to make any variation in design or construction to the equipment described.

ALLSCAPE is a registered trademark of the Genlyte Group.

PROJECT
FIXTURE TYPE
CATALOG#

2930 South Fairview Street
Santa Ana, CA 92704
Phone: 714 668 3660
Fax: 714 668 1107
sales@allscape.net
http://www.alllighting.com

SP-10

Product Order Guide

Series	Max Watts	Lamp Type	Voltage[1]	Finish[1]	Options
SP-10	175 MH	E17	120	BK Black	QS Quartz Standby
	150 HPS	E17	208	BZ Bronze	EMG Emergency battery Backup
	26 CFQ	CFQ[2]	240	WH White	
	42 CFT	CFT[2]	277	GR Green	
	13 CF	CF[2]		NA Natural Aluminum	
	18 LPS	T17		GY Gray	
				CC Custom Color	

1 Consult factory for other colors and voltages
2 CF = single biax, CFQ = double biax, CFT = triple biax

Example: SP-10-100HPS-E17-120-BK

Photometric Data

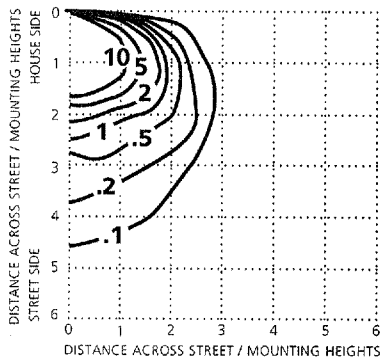

Conversion Factors

Lamp Type	Lumens	Mounting Height 2.00	3.00	4.00	5.00	6.00
175W CTD MH	15000	4.00	1.78	1.00	0.64	0.44
100W CTD MH	8500	2.27	1.01	0.57	0.36	0.25
70W CTD MH	5300	1.41	0.63	0.35	0.23	0.16
150W CTD HPS	15000	4.00	1.78	1.00	0.64	0.44
100W CTD HPS	8800	2.35	1.04	0.59	0.38	0.26
70WCTD HPS	5950	1.59	0.71	0.40	0.25	0.18

SP-10-175MH
w/coated lamp (CTD)
4' Mounting Height
ISOLUX Curve—value in initial footcandles

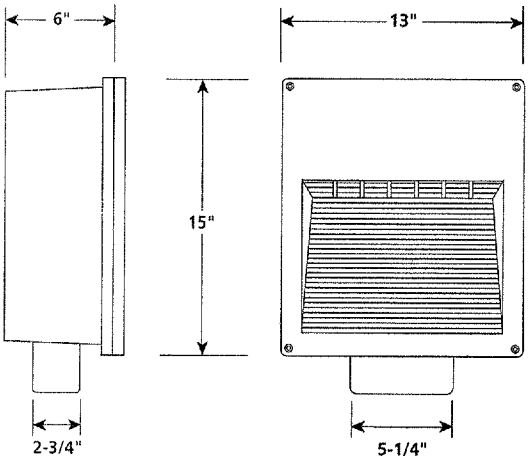

© 2004 - 2007 ALLSCAPE. All rights reserved.

Due to a program of continuous improvement, ALLSCAPE reserves the right to make any variation in design or construction to the equipment described.

ALLSCAPE is a registered trademark of the Genlyte Group.

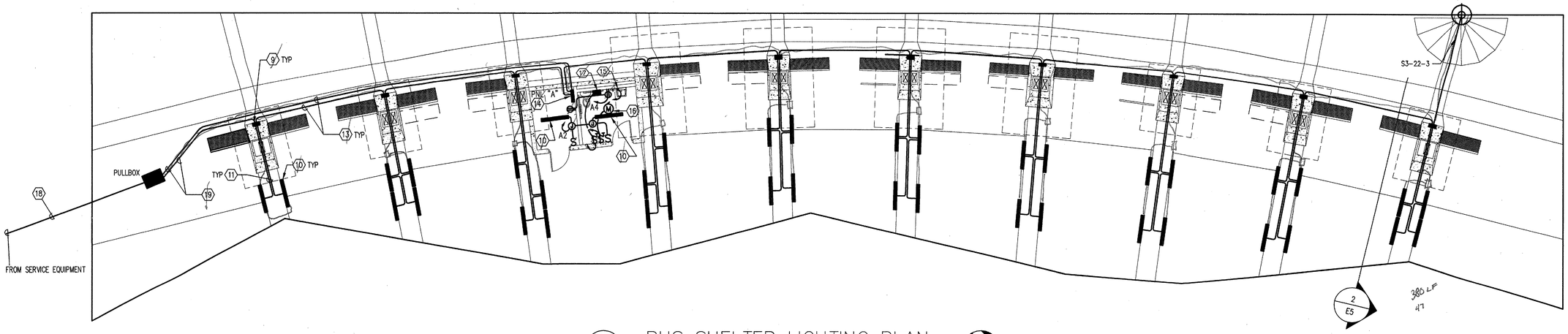

1 / E5 BUS SHELTER LIGHTING PLAN

SCALE: 1/8" = 1'-0"

KEYED NOTES (⬡)

1. WHERE APPLICABLE, COMPACTION IN CITY OR STATE RIGHT OF WAY SHALL MEET OR EXCEED MINIMUM REQUIREMENTS. IF ADDITIONAL COMPACTION IS REQUIRED, A NON REFUNDABLE CONTRACT MUST BE EXECUTED.
2. SHADING AND BEDDING MATERIAL TO BE TYPE IV, CLASS 1 FOR DIRECT BURIED CABLE AND TYPE IV, CLASS 2 FOR CABLE IN CONDUIT. TYPE III MATERIAL IS SUITABLE FOR EITHER TYPE OF INSTALLATION. REFER TO PNM STANDARD DS-10-12.4 FOR FILL MATERIAL REQUIREMENTS.
3. LATEST OSHA TRENCH SAFETY REQUIREMENTS MUST BE STRICTLY OBSERVED.
4. WARNING TAPE SHALL BE PLACED A MINIMUM OF 12" ABOVE THE TOP OF CONDUIT.
5. TRENCH BOTTOM SHALL BE SMOOTH, FLAT AND WITHOUT SURFACE IRREGULARITIES, AND SHALL BE FREE AND CLEAR OF DEBRIS OR ANY ORGANIC MATERIAL. IF TRENCH BOTTOM CANNOT, WITH REASONABLE EFFORT, BE MADE WITHOUT SURFACE IRREGULARITIES, THAN A SUFFICIENT AMOUNT OF BEDDING MATERIAL AS REQUIRED BY NOTE 2, SHALL BE INSTALLED TO PROVIDE THE REQUIRED SURFACE. IN NO EVENT SHALL THE TOP OF CONDUIT BE LESS THAN 24" BELOW FINISH GRADE.
6. MAXIMUM CHANGE IN THE TRENCH BOTTOM ELEVATION SHALL NOT EXCEED 1 FT OVER A 10 FT LENGTH. BEDDING MATERIAL AS REQUIRED BY NOTE 2, MAY BE USED TO MEET THIS REQUIREMENT.
7. CABLE IN CONDUIT SHALL NOT BE USED IN ANY CABLE RUN IN COMBINATION WITH DIRECT BURIED CABLE.
8. SCHEDULE 40 PVC ELBOWS AT ANGLE CHANGES LESS THAN 45 DEG., GALVANIZED METAL ELBOWS AT ANGLE CHANGES OF 45 DEG. OR GREATER.
9. INSTALL TYPE S10-N/A-3 RECESSED FIXTURE IN BACK FACE OF EACH CONCRETE COLUMN. MOUNT AT 3" ABOVE FINISH GRADE.
10. INSTALL TYPE PW-N/A-3 FIXTURE IN OUTSIDE FACE OF EACH ROOF BEAM. CENTER FIXTURE , BELOW SOLID ROOF PANEL AND MOUNT ON BOTTOM FLANGE OF BEAM.
11. ROUTE CONDUIT CONCEALED IN CONCRETE AND HOLLOW STEEL BEAM AND EXPOSED ALONG BOTTOM FLANGE OF BEAM. PAINT ALL EXPOSED CONDUIT PER ARCHITECT.
12. COORDINATE PENETRATION OF STEEL COLUMN WITH OTHER TRADES.
13. 3#10, 1#10 GND-1"C.
14. INSTALL PANEL "A", SEE SHEET E6
15. CONNECT WATER HEATER TO PANEL "A", CIRCUITS # 5,7
16. CONNECT EXHAUST FAN TO PANEL "A", CIRCUIT # 6
17. CONNECT WALL HEATER TO PANEL "A", CIRCUITS #1,3
18. 1" CONDUIT WITH 2#10, 1#10 GROUND FOR PANEL "A" AND 2#10, 1#10 GROUND FOR SHELTER LIGHTS.
19. 3/4" CONDUIT WITH 2#10 AND 1#10 GROUND.

EXCLUDE PAINTING 20" STEEL COLUMN PENETRATIONS NOTE 12 ON E5

HEATER
EXHAUST FAN
WATER HEATER

TRAM ONLY

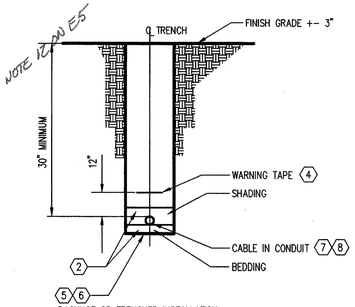

BACKHOE OR TRENCHER INSTALLATION:
THIS BURIAL METHOD MUST BE USED FOR THE ENTIRE TRENCH LENGTH, FROM EQUIPMENT TO EQUIPMENT.

3 / E5 TRENCH DETAIL 1 3

SCALE: 3/16" = 1'-0"

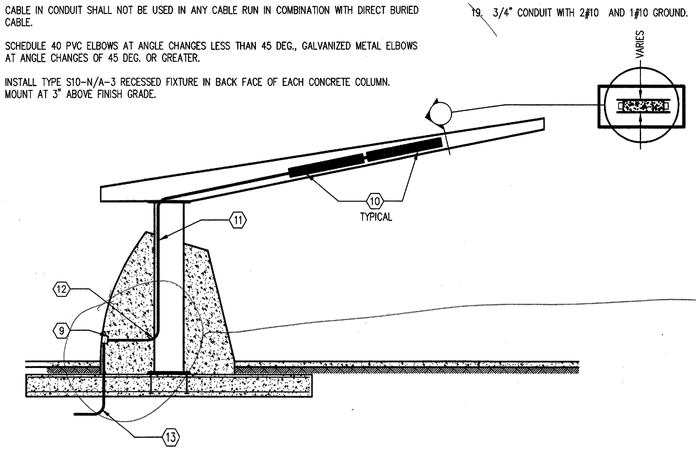

2 / E5 TYPICAL SHELTER LIGHTING DETAIL

SCALE: 3/16" = 1'-0"

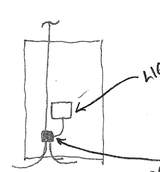

DEEP 2G MASON PULLBOX W/SS BLANK COV

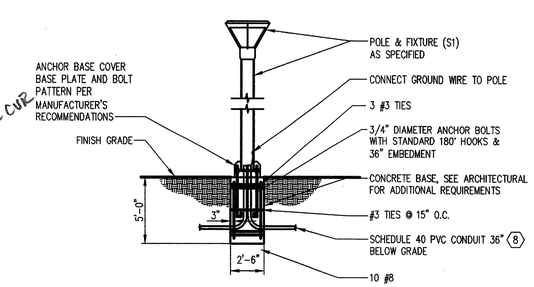

4 / E5 POLE MOUNTING DETAIL

NOT TO SCALE

1/8"=1' 0 4 8 16 24

3/16"=1' 0 4 8 12 16

AS-BUILT INFORMATION

CONTRACTOR WORK STAKED BY	DATE
INSPECTOR ACCEPTANCE BY	DATE
FIELD VERIFICATION BY	DATE
DRAWINGS CORRECTED BY	DATE

MICRO-FILM INFORMATION

RECORDED BY	DATE
NO.	DATE

BENCH MARKS

SURVEY INFORMATION

FIELD NOTES

NO.	BY	DATE

ENGINEER'S SEAL

JEANNE E. DONELSON NEW MEXICO 11179 PROFESSIONAL ENGINEER

NO.	DATE	REMARKS	BY
		REVISIONS	
		DESIGN	

DESIGNED BY DATE
DRAWN BY DATE
CHECKED BY DATE

DMJM DESIGN | AECOM

201 THIRD STREET NW, SUITE 600
ALBUQUERQUE, NEW MEXICO 87102

CITY OF ALBUQUERQUE
DEPARTMENT OF MUNICIPAL DEVELOPMENT

7 BAR LOOP PARK & RIDE

ELECTRICAL LIGHTING PLAN & DETAILS

DESIGN REVIEW COMMITTEE: APPROVED DEC 2 4 2007 DESIGN REVIEW COMMITTEE

CITY ENGINEER APPROVAL: APPROVED DEC 2 4 2007 CITY ENGINEER

LAST DESIGN UPDATE | MO./DAY/YR. | MO./DAY/YR.

CITY PROJECT NO.	ZONE MAP NO.	SHEET	OF
6065.03	A – 13	E5	E6

P:_DESIGN\COA-AE\Bus Shelters\500 CAD\E\Sheet\080024-E5 Shelter & Details.dwg
Mon, 19-Nov-2007 - 3:26:pm, Plotted by: JENSEND

PANEL: PL PHASE: 1 WIRE: 3 LOCATION: BUS STRUCTURE

VOLTAGE: 240 / 120 MAIN CIRCUIT BREAKER: 100A/2P MOUNTING: SURFACE

TVSS: NO BREAKER TYPE: BOLT ON

BUSSING AMPS: 100 FED FROM: SERVICE EQUIPMENT PANEL DEVICE MIN. RATING: 22,000

DESCRIPTION	LOAD VA A	LOAD VA B	BKR TR	CCT NO		CCT NO	BKR TR	LOAD VA A	LOAD VA B	DESCRIPTION
	BRANCH CHARACTERISTICS									
WALL HEATER (BATHROOM)	900.		20	1	A	2	20	160.		LIGHTS (BATHROOM & STORAGE)
		900.	2P	3	B	4	20		360.	RECEPTACLES (BATHROOM & STORAGE)
WATER HEATER (BATHROOM)	1350.		20	5	A	6	20	168.		ROOF EXHAUST FAN
		1350.	2P	7	B	8	20			SPACE
SPACE			20	9	A	10	20			SPACE
SPACE			20	11	B	12	20			SPACE
	2250	2250						328	360	

TOTAL CONNECTED VA

PHASE A= 2578

PHASE B= 2610

SUBTOTAL = 5188 SECTION 1

SECTION 2

TOTAL = 5188 LESS MOTOR STARTING

TOTAL CONNECTED AMPS 21.6 A

TOTAL DEMAND AMPS WITH MOTOR STARTING = 21.6 A X 125% FUTURE 27.0 A

TOTAL DEMAND VA = 5188 VA X 125% FUTURE = 6485 VA

MOTOR STARTING AMPS 0

MANUFACTURER AND TYPE

FIXTURE SCHEDULE

SYMBOL	ARRANGEMENT	DESCRIPTION
S1	SINGLE	240V/175W METAL HALIDE LUMINAIRE & POLE SELUX #QHO-R5-1-H175-SV-240 LUMINAIRE WITH #S35-16-SV POLE
S10 10	SINGLE	240V/70W RECESSED METAL HALIDE FIXTURE WITH LAMP & 4-3/4" CONDUIT HUBS (ENTRANCES). COLOR PER ARCHITECT. ALLSCAPE # SP-10-70-240-E17-CC-MOD-4-3/4
PW 4D	SINGLE	240V/VANDAL RESISTANT/WET LOCATION FLUORESCENT FIXTURE WITH 2-40W TWIN TUBE LAMPS AND LOW TEMPERATURE BALLAST. FIXTURE COLOR PER ARCHITECT FAIL-SAFE # FS-PW-PP-80-B1321UNV-HPB-VRSD

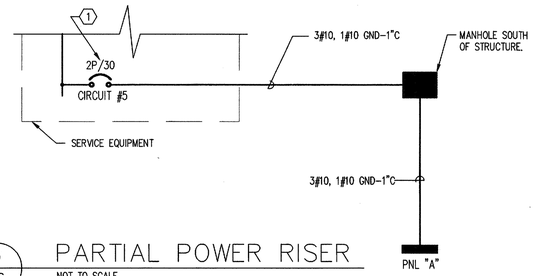

5 / E6 PARTIAL POWER RISER

NOT TO SCALE

KEYED NOTES (⬡)

1. FURNISH AND INSTALL CIRCUIT BREAKER IN LIGHTING CONTROL CABINET.

AS-BUILT INFORMATION: CONTRACTOR / DATE; SURVEY / DATE; INSPECTOR'S ACCEPTANCE BY / DATE; FIELD VERIFICATION BY / DATE; DRAWINGS CORRECTED BY / DATE

MICRO-FILM INFORMATION: RECORDED BY / DATE; NO. / DATE

BENCH MARKS

SURVEY INFORMATION: FIELD NOTES; NO. / BY / DATE

ENGINEER'S SEAL

REMARKS / REVISIONS: NO. / DATE / BY

DESIGN: DESIGNED BY / DATE; DRAWN BY / DATE; CHECKED BY / DATE

DMJM DESIGN | AECOM

201 THIRD STREET NW, SUITE 600
ALBUQUERQUE, NEW MEXICO 87102

CITY OF ALBUQUERQUE
DEPARTMENT OF
MUNICIPAL DEVELOPMENT

7 BAR LOOP PARK & RIDE
SCHEDULE AND DETAILS

DESIGN REVIEW COMMITTEE: APPROVED DEC 24 2007 DESIGN REVIEW COMMITTEE

CITY ENGINEER APPROVAL: APPROVED DEC 24 2007 CITY ENGINEER

LAST DESIGN UPDATE: MO./DAY/YR. MO./DAY/YR.

CITY PROJECT NO. 6065.03 ZONE MAP NO. A – 13 SHEET E6 OF E6

P:_DESIGN\COA-AE\Bus Shelters\500 CAD\E\Sheet\080024-E6 Details.dwg
Mon, 19-Nov-2007 – 3:26:pm, Plotted by: JENSEND

CORRALES POINTE APARTMENTS

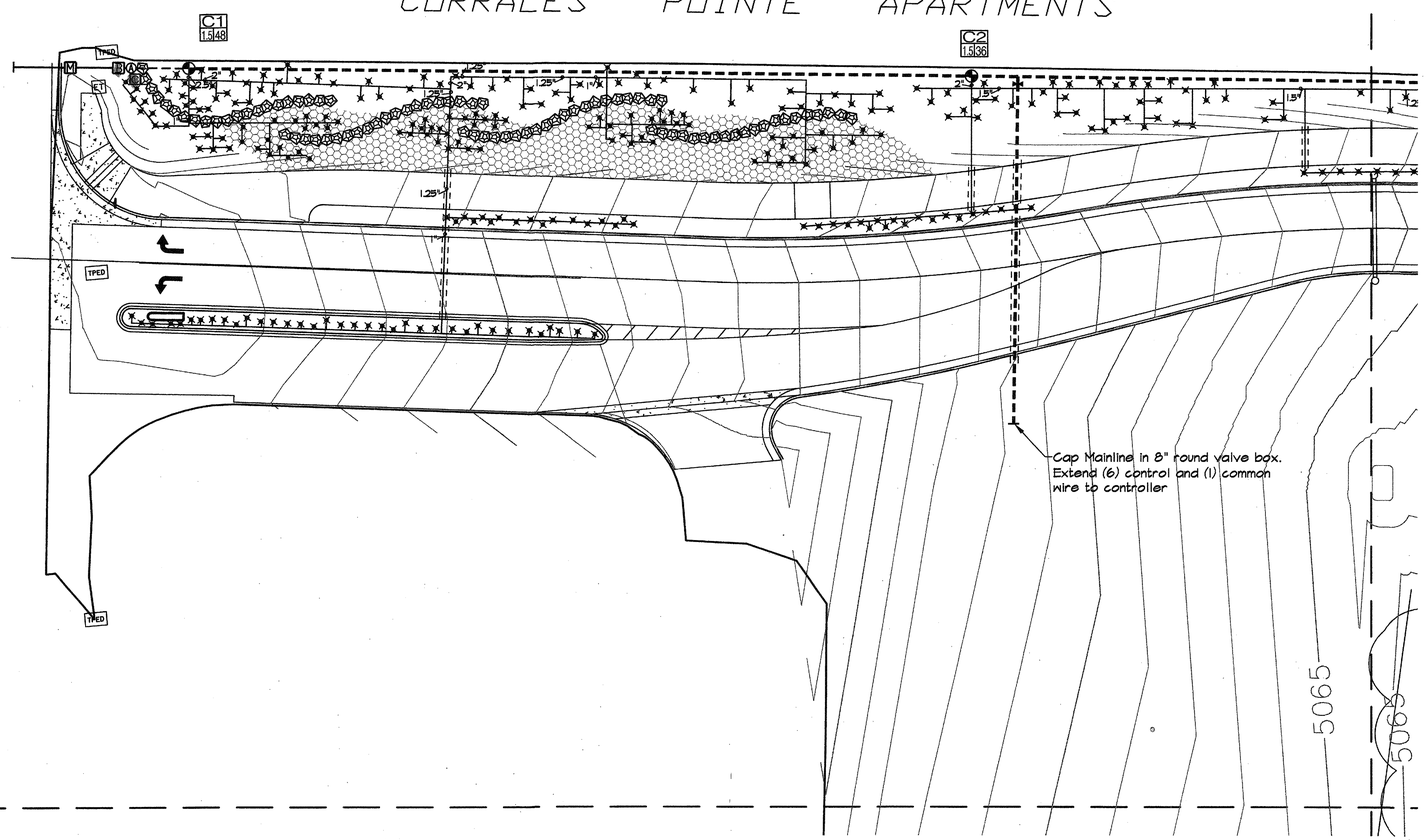

IRRIGATION EQUIPMENT SCHEDULE

SYMBOL	DESCRIPTION
M	1 1/2" Meter - by others
= = =	Sleeving: Class 200 PVC (2 sizes larger than pipe to be sleeved).
B	Backflow Prevention Assembly: Febco 765-1 1/2" Pressure Vacuum Breaker in HotBox #HB1.5 Insulated Enclosure. Contractor to provide positive heat source (COA Detail 2702-A).
	Master Valve: Rain Bird #200-PEB-PRS-D 2" Plastic Electric Valve w/Flow Control and Pressure Regulation Module
	Gate Valve Assembly (COA Detail 2706).
A	Air Relief Valve: Crispin 1C-10A-1 1/2" (COA Detail 2705).
- - - -	Mainline Piping: Schedule 40 PVC Solvent Weld (2" unless noted otherwise)
———	Lateral Piping: Schedule 40 PVC Solvent Weld, 3/4" unless noted otherwise.
	Automatic Valve Assembly: Rain Bird #150-PEB-PRS-D 1-1/2" Plastic Electric Valve w/Flow Control and Pressure Regulation Module (COA Detail 2703).
	Bubbler Assembly: Rain Bird 1401 Trickle Pattern Pressure Compensating Flood Bubbler (.25 gpm @ 30 psi).
C	Irrigation Controller: Rain Bird ESP-16 MC (16 Station) Controller in PED-DD16 Pedestal.
C2 / 1" | 1.2	Indicates Controller and Station Number. Indicates Lateral Discharge in GPM. Indicates Remote Control Valve Size in Inches.

GENERAL IRRIGATION NOTES

1. The system design assumes a minimum static pressure of 60 PSI at the point-of-connection. The irrigation contractor shall verify pressure and flow on site prior to construction.
2. The irrigation contractor shall become thoroughly familiar with the specifications for this and related work prior to construction.
3. The irrigation contractor shall determine the exact location of underground utilities and electrical wiring prior to construction.
4. The irrigation contractor shall not install the sprinkler system when it is obvious in the field that obstructions or grade differences exist that might not have been considered in the engineering, or if the discrepancies in construction details, legend, notes, or specifications are discovered. All such obstructions or discrepancies shall be brought to the attention of the Owner's Representative.
5. The drawings are diagrammatic. In some cases, irrigation components may be shown outside of planting areas for clarity. The irrigation contractor shall avoid any conflicts between the irrigation system, planting materials, and above ground utilities. Irrigation pipe and wiring shall be installed in landscaped areas whenever possible.
6. All irrigation components shall be installed in accordance with section 1001-Landscape Irrigation System, and referenced details contained within the City of Albuquerque standard specifications manual, latest edition.

KEYED MAP

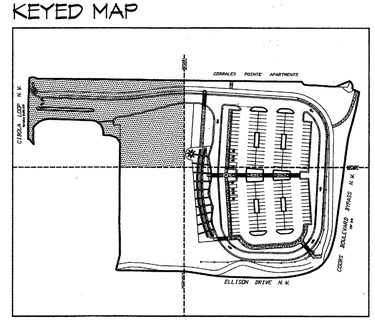

N.T.S.

Scale 1" = 20'

NORTH 10 0 20 40

Bohannan ▲ Huston

Courtyard I 7500 Jefferson St. NE Albuquerque, NM 87109-4335

ENGINEERING ▲ SPATIAL DATA ▲ ADVANCED TECHNOLOGIES

CITY OF ALBUQUERQUE
DEPARTMENT OF
MUNICIPAL DEVELOPMENT

BAR 7 LOOP
PARK & RIDE
IRRIGATION PLAN

DESIGN REVIEW COMMITTEE: APPROVED DEC 24 2007 DESIGN REVIEW CO

CITY ENGINEER APPROVAL: APPROVED DEC 24 2007 CITY ENGINEER

LAST DESIGN UPDATE | MO./DAY/YR. | MO./DAY/YR.

CITY PROJECT NO. 6065.01 | ZONE MAP NO. A-13-Z | SHEET L1 OF L7

AS-BUILT INFORMATION

	DATE
CONTRACTOR	
WATER	
STAKED BY	
INSPECTOR'S ACCEPTANCE BY	
FIELD VERIFICATION BY	
DRAWINGS CORRECTED BY	

MICRO-FILM INFORMATION

	DATE
RECORDED BY	
NO.	

BENCH MARKS

SURVEY INFORMATION
FIELD NOTES

NO.	BY	DATE

ENGINEER'S SEAL: STATE OF NEW MEXICO, CHRISTOPHER J. GREEN, 12234, PROFESSIONAL ENGINEER — 11.13.07

NO.	DATE	REMARKS	BY
		REVISIONS	
		DESIGN	

		DATE
DESIGNED BY	CG	11/07
DRAWN BY	MA	11/07
CHECKED BY	CG	11/07

CONSENSUS PLANNING, INC.
Planning / Landscape Architecture
302 Eighth Street NW
Albuquerque, NM 87102
(505) 764-9801 Fax 842-5495
e-mail: cp@consensusplanning.com

BHI JOB NO. 080024

P:\01_Projects\1222-07_BHI-Seven Bar TC\ACAD\01_SB base65_7-18-07.dwg
Mon, 12-Nov-2007 - 1:32pm, Plotted by: CHRIS

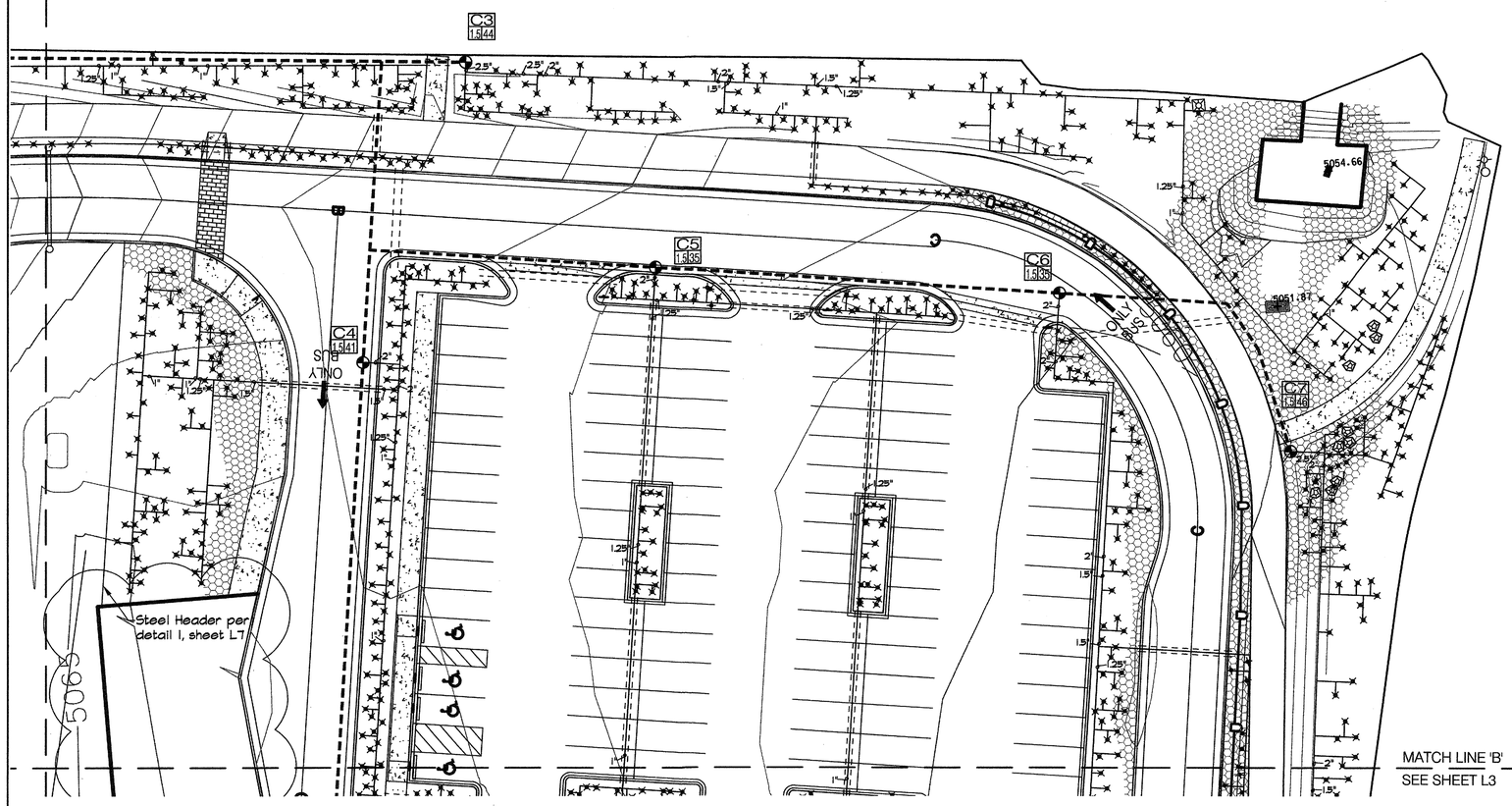

IRRIGATION EQUIPMENT SCHEDULE

SYMBOL	DESCRIPTION
M	1 1/2" Meter - by others
= = =	Sleeving: Class 200 PVC (2 sizes larger than pipe to be sleeved).
B	Backflow Prevention Assembly: Febco 765-1 1/2" Pressure Vacuum Breaker in HotBox #HB1.5 Insulated Enclosure. Contractor to provide positive heat source (COA Detail 2702-A).
	Master Valve: Rain Bird #200-PEB-PRS-D 2" Plastic Electric Valve w/Flow Control and Pressure Regulation Module
	Gate Valve Assembly (COA Detail 2706).
A	Air Relief Valve: Crispin 1C-10A-1 1/2" (COA Detail 2705).
- - - -	Mainline Piping: Schedule 40 PVC Solvent Weld (2" unless noted otherwise)
———	Lateral Piping: Schedule 40 PVC Solvent Weld, 3/4" unless noted otherwise.
	Automatic Valve Assembly: Rain Bird #150-PEB-PRS-D 1-1/2" Plastic Electric Valve w/Flow Control and Pressure Regulation Module (COA Detail 2703).
	Bubbler Assembly: Rain Bird 1401 Trickle Pattern Pressure Compensating Flood Bubbler (.25 gpm @ 30 psi).
C	Irrigation Controller: Rain Bird ESP-16 MC (16 Station) Controller in PED-DD16 Pedestal.
C2 / 1" / 1.2	Indicates Controller and Station Number. Indicates Lateral Discharge in GPM. Indicates Remote Control Valve Size in Inches.

KEYED MAP

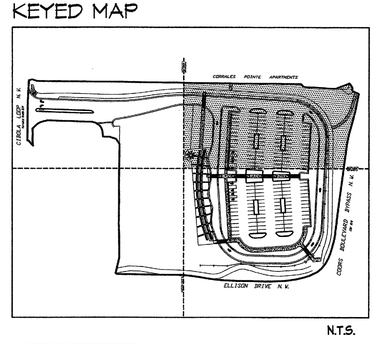
CORRIDA LOOP N.W.
CORRIDA
CORRIDA
CORRIDA

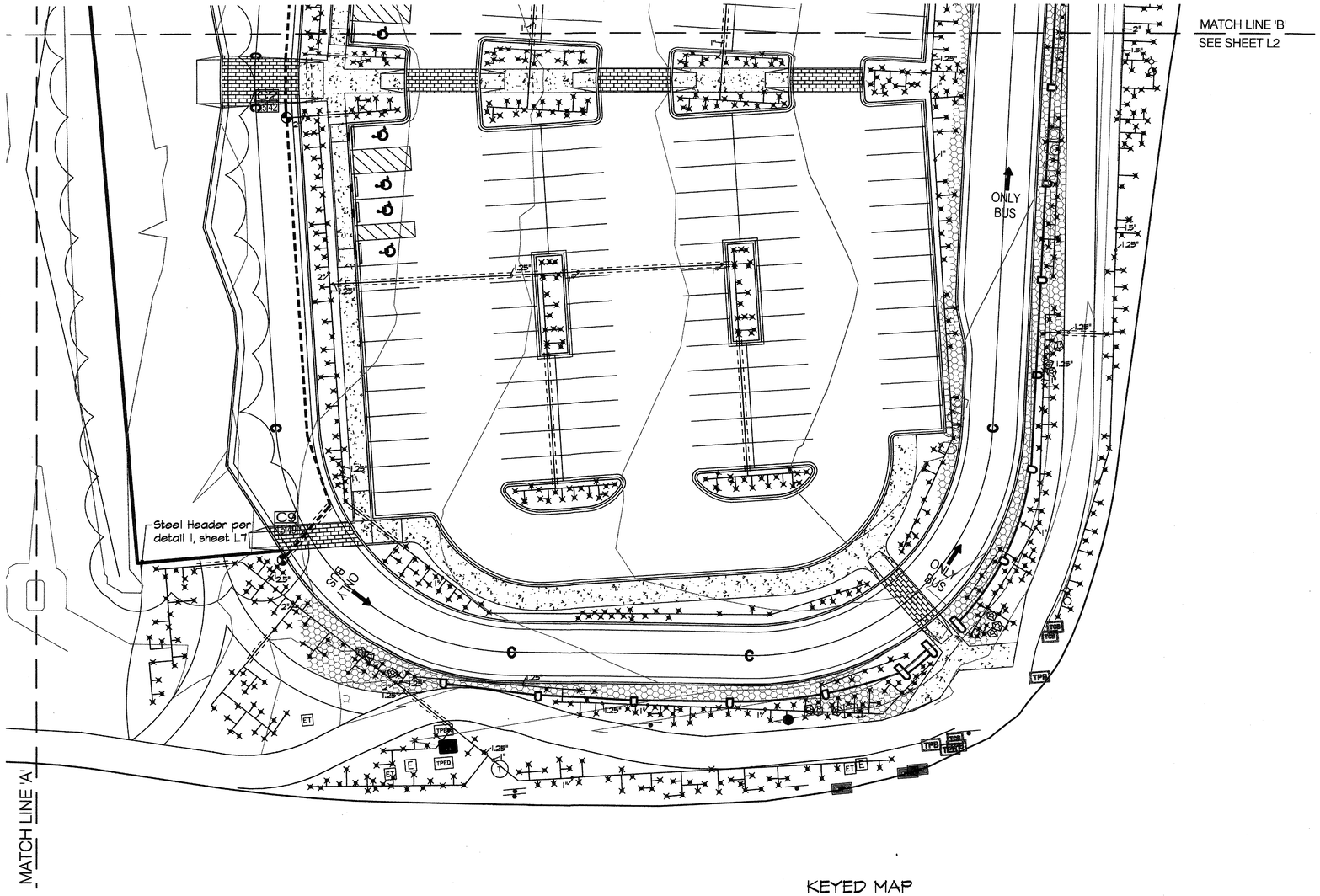

IRRIGATION EQUIPMENT SCHEDULE

SYMBOL	DESCRIPTION
M	1 1/2" Meter - by others
= = =	Sleeving: Class 200 PVC (2 sizes larger than pipe to be sleeved).
B	Backflow Prevention Assembly: Febco 765-1 1/2" Pressure Vacuum Breaker in HotBox #HB1.5 Insulated Enclosure. Contractor to provide positive heat source (COA Detail 2702-A).
	Master Valve: Rain Bird #200-PEB-PRS-D 2" Plastic Electric Valve w/Flow Control and Pressure Regulation Module
	Gate Valve Assembly (COA Detail 2706).
A	Air Relief Valve: Crispin 1C-10A-1 1/2" (COA Detail 2705).
— — — —	Mainline Piping: Schedule 40 PVC Solvent Weld (2" unless noted otherwise)
———	Lateral Piping: Schedule 40 PVC Solvent Weld, 3/4" unless noted otherwise.
	Automatic Valve Assembly: Rain Bird #150-PEB-PRS-D 1-1/2" Plastic Electric Valve w/Flow Control and Pressure Regulation Module (COA Detail 2703).
	Bubbler Assembly: Rain Bird 1401 Trickle Pattern Pressure Compensating Flood Bubbler (.25 gpm @ 30 psi).
C	Irrigation Controller: Rain Bird ESP-16 MC (16 Station) Controller in PED-DD16 Pedestal.
C2 / 1" / 12	Indicates Controller and Station Number. Indicates Lateral Discharge in GPM. Indicates Remote Control Valve Size in Inches.

KEYED MAP

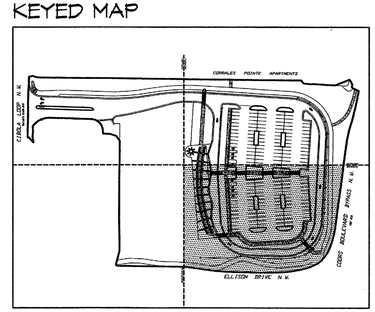

N.T.S.

Scale 1" = 20'

NORTH 10 0 20 40

Bohannan ▲ Huston

Courtyard I 7500 Jefferson St. NE Albuquerque, NM 87109-4335

ENGINEERING ▲ SPATIAL DATA ▲ ADVANCED TECHNOLOGIES

CONSENSUS PLANNING, INC.
Planning / Landscape Architecture
302 Eighth Street NW
Albuquerque, NM 87102
(505) 764-9801 Fax 842-5495
e-mail: cp@consensusplanning.com

BHI JOB NO. 080024

CITY OF ALBUQUERQUE
DEPARTMENT OF
MUNICIPAL DEVELOPMENT

BAR 7 LOOP
PARK & RIDE
IRRIGATION PLAN

DESIGN REVIEW COMMITTEE: APPROVED DEC 2 4 2007 DESIGN REVIEW COMMITTEE

CITY ENGINEER APPROVAL: APPROVED DEC 3 4 2007 CITY ENGINEER

LAST DESIGN UPDATE | MO./DAY/YR. | MO./DAY/YR.

CITY PROJECT NO. 6065.01 | ZONE MAP NO. A-13-Z | SHEET L3 OF L7

AS-BUILT INFORMATION

	DATE
CONTRACTOR	
WORK STAKED BY	
INSPECTOR'S ACCEPTANCE BY	
FIELD VERIFICATION BY	
DRAWINGS CORRECTED BY	

MICRO-FILM INFORMATION

	DATE
RECORDED BY	
NO.	

BENCH MARKS

SURVEY INFORMATION

FIELD NOTES

NO.	BY	DATE

ENGINEER'S SEAL

STATE OF NEW MEXICO CHRISTOPHER J. GREEN 1234 REGISTERED LANDSCAPE ARCHITECT

11.16.07

NO.	DATE	REMARKS	BY
		REVISIONS	
		DESIGN	

DESIGNED BY CG DATE 11/07
DRAWN BY MA DATE 11/07
CHECKED BY CG DATE 11/07

P:\01_Projects\1222-07_BHI-Seven Bar TC\ACAD\01_SB base65_7-18-07.dwg
Mon, 12-Nov-2007 - 1:33 pm, Plotted by: CHRIS

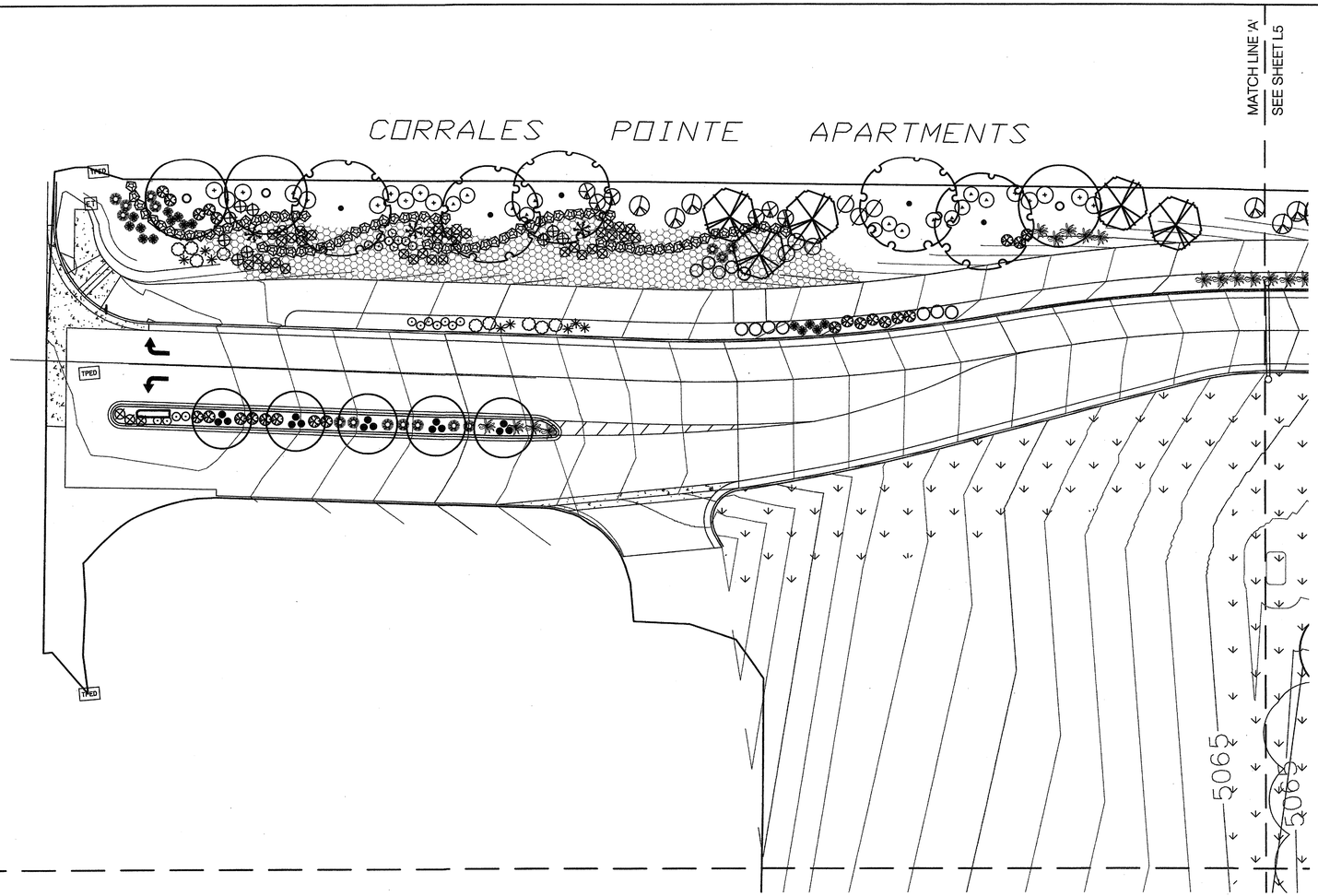

GENERAL LANDSCAPE NOTES

1. Prior to beginning work on the project, the Landscape Contractor shall revien the project in the field with the Owner's Representative.
2. If discrepancies occur between the drawings and the site, the Landscape Contractor shall notify the Owner's Representative for clarification prior to proceeding on that portion of work.
3. All planting areas are to have weeds and competitive vegetation removed prior to preparation for planting.
4. All existing plant materials shall be protected during construction. Damaged materials shall be replaced in kind at the Contractor's expense.
5. Plant quantities are provided for Contractor's convenience only, plans shall take precedence.
6. The Owner's Representative shall approve all plant material prior to planting. In addition, the Owner's Representative reserves the right to refuse any plant material deemed unacceptable. The Owner's Representative is to approve any and all substitutions.
7. It is the Landscape Contractor's responsibility to locate all underground utilities prior to commencement of planting operations.
8. Planting installation shall be in accordance with City of Albuquerque standard specifications and details.
9. Native seed mix (non-irrigated) shall be installed in accordance with City of Albuquerque standard specifications (Section 1012 - Native Grass Seeding).
10. Planting areas shall be top dressed with 3" layer of 7/8" Santa Fe Brown rock mulch over DeWitt Pro-5 weed control fabric.

KEYED MAP

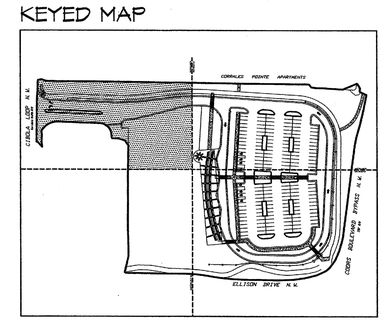

N.T.S.

PLANT LEGEND

Qty.	Symbol	Scientific Name (Common Name)	Size	Remarks	Water Use
26		Chitalpa tashkentensis (Chitalpa)	24" Box	8' ht. x 4' spr. max. of 3 trunks	Medium
5		Craetagus phaenopyrun (Washington Hawthorn)	15-Gal	8' ht. x 4' spr. single trunk	Medium +
27		Fraxinus oxycarpa 'Raynood' (Raynood Ash)	2" B&B	16' ht. x 6' spr.	Medium +
9		Forestiera neomexicana (New Mexico Olive)	15-Gal	8' ht. x 4' spr.	Medium
11		Gleditsia triacanthos 'Imperial' (Imperial Honeylocust)	2" B&B	16' ht. x 6' spr.	Medium +
15		Ulmus parvifolia 'Allee II' (Allee Lacebark Elm)	2" B&B	16' ht. x 6' spr.	Medium
21		Pyrus calleryana 'Aristocrat' (Aristocrat Pear)	2" B&B	16' ht. x 6' spr.	Medium +
13		Quercus buckleyi (Texas Red Oak)	24" Box	12' ht. x 6' spr.	Medium

Qty.	Symbol	Scientific Name (Common Name)	Size	Remarks	Water Use
58		Artemesia 'Powis Castle' ('Powis Castle' Sage)	1-Gal	3' o.c. 3' ht. x 3' spr.	Medium
51		Baccharis 'Starn' (Thompson Baccharis)	5-Gal	4' o.c. 2' ht. x 4' spr.	Low +
24		Caesalpinia gilleselii (Yellow Bird of Paradise)	5-Gal	6' o.c. 6' ht. x 6' spr.	Low
139		Caryopteris clandonensis (Blue Mist)	5-Gal	3' o.c. 3' ht. x 3' spr.	Medium
50		Chrysothamnus nauseosus (Chamisa)	1-Gal	5' o.c. 4' ht. x 4' spr.	Low
153		Ericameria laricifolia (Turpentine Bush)	1-Gal	2' o.c. 2' ht. x 2' spr.	Medium
65		Fallugia paradoxa (Apache Plume)	1-Gal	5' o.c. 4' ht. x 4' spr.	Low
47		Hesperaloe parviflora (Red Yucca)	1-Gal	3' o.c. 3' ht. x 3' spr.	Medium
152		Juniperus sabina 'Buffalo' (Buffalo Juniper)	5-Gal	6' o.c. 2' ht. x 6' spr.	Low +
77		Muhenbergia cap. 'Regal Mist' (Regal Mist)	1-Gal	3' o.c. 3' ht. x 3' spr.	Medium

Qty.	Symbol	Scientific Name (Common Name)	Size	Remarks	Water Use
92		Nasella tennuissima (Threadgrass)	1-Gal	2' o.c. 2' ht. x 2' spr.	Low
10		Nolina texana Beargrass	5-Gal	5' o.c. 4' ht. x 4' spr.	Low
71		Oenothera berlandieri (Mexican Evening Primrose)	1-Gal	2' o.c. 2' ht. x 2' spr.	Low +
33		Perovskia atriplicifolia (Russian Sage)	1-Gal	5' o.c. 4' ht. x 5' spr.	Medium
41		Rhus trilobata (Three-leaf Sumac)	5-Gal	4' o.c. 4' ht. x 4' spr.	Low +
83		Salvia greggii (Cherry Sage)	1-Gal	3' o.c. 3' ht. x 3' spr.	Medium

	Symbol	Description
16,630 s.f.		Native Seed Mix COA Specification Section 1012-Native Grass Seeding - Westside Mix)
102		Moss Rock boulders (3' average diameter)
15,434 s.f.		2" - 4" Santa Ana Tan Cobble Mulch 6" depth over DeWitt Pro-5 weed control fabric

Scale 1" = 20'

NORTH 10 0 20 40

CONSENSUS PLANNING, INC.
Planning / Landscape Architecture
302 Eighth Street NW
Albuquerque, NM 87102
(505) 764-9801 Fax 842-5495
e-mail: cp@consensusplanning.com

BHI JOB NO. 080024

Bohannan ▲ Huston
Courtyard I 7500 Jefferson St. NE Albuquerque, NM 87109-4335
ENGINEERING ▲ SPATIAL DATA ▲ ADVANCED TECHNOLOGIES

CITY OF ALBUQUERQUE
DEPARTMENT OF MUNICIPAL DEVELOPMENT

BAR 7 LOOP
PARK & RIDE
PLANTING PLAN

DESIGN REVIEW COMMITTEE: APPROVED AUG 24 2007 — DESIGN REVIEW COMMITTEE

CITY ENGINEER APPROVAL: APPROVED DEC 04 2007 — CITY ENGINEER

LAST DESIGN UPDATE | MO./DAY/YR. | MO./DAY/YR.

CITY PROJECT NO.	ZONE MAP NO.	SHEET	OF
6065.01	A-13-Z	L4	L7

AS-BUILT INFORMATION

	DATE
CONTRACTOR WORK STAKED BY	
INSPECTOR ACCEPTANCE BY	
FIELD VERIFICATION BY	
DRAWINGS CORRECTED BY	
MICRO-FILM INFORMATION	
RECORDED BY	
NO.	DATE

BENCH MARKS

SURVEY INFORMATION
FIELD NOTES

NO.	BY	DATE

ENGINEER'S SEAL
STATE OF NEW MEXICO — CHRISTOPHER L. GREEN — REGISTERED LANDSCAPE ARCHITECT #234 — 11-13-07

NO.	DATE	REMARKS	BY
		REVISIONS	
		DESIGN	

DESIGNED BY	CG	DATE 11/07
DRAWN BY	MA	DATE 11/07
CHECKED BY	CG	DATE 11/07

P:\01_Projects\1222-07_BHI-Seven Bar TC\14CAD\01_SB base65_7-18-07.dwg
Mon, 12-Nov-2007 - 4:57:pm, Plotted by: CHRIS

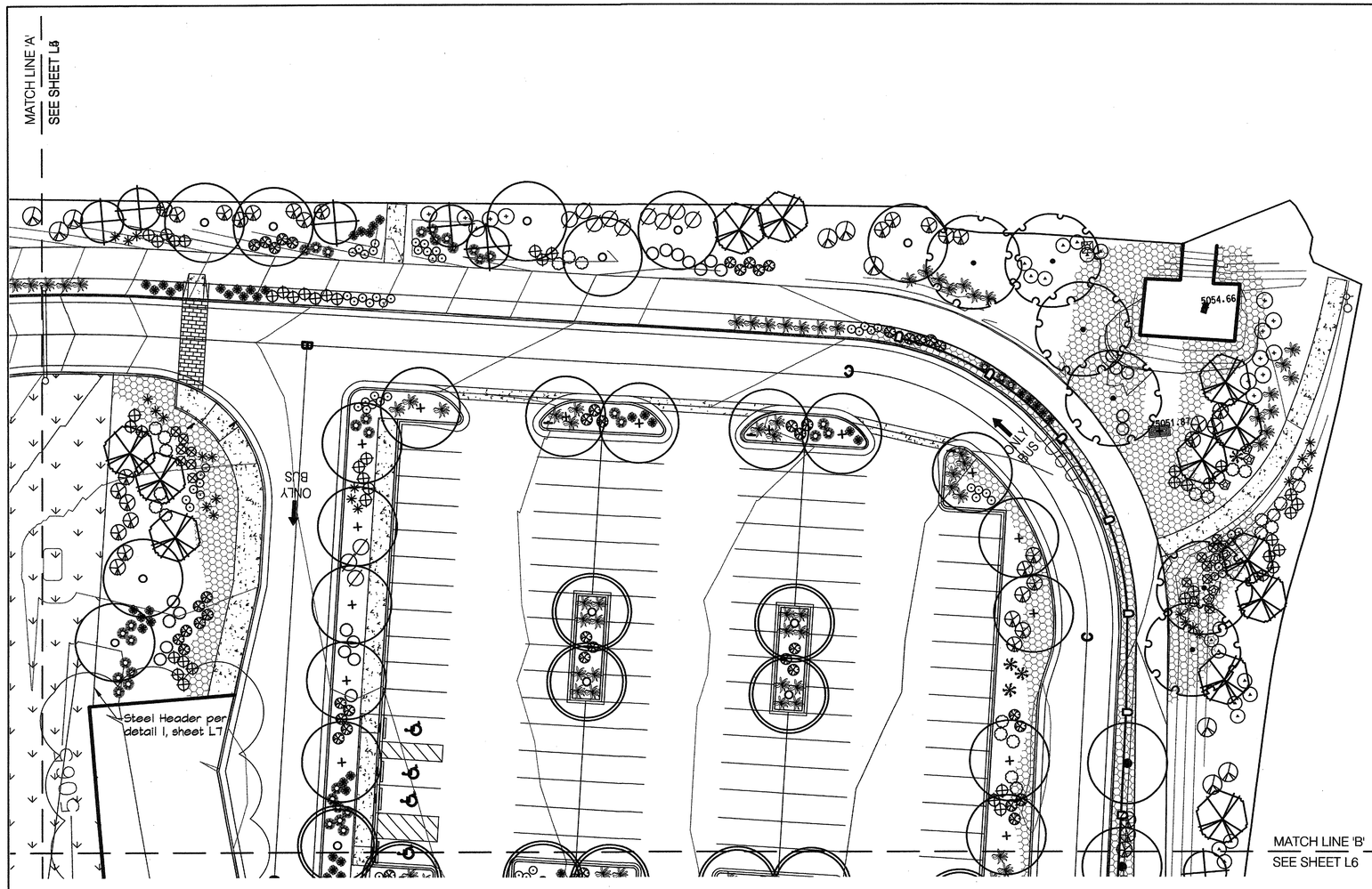

GENERAL LANDSCAPE NOTES

1. Prior to beginning work on the project, the Landscape Contractor shall review the project in the field with the Owner's Representative.
2. If discrepancies occur between the drawings and the site, the Landscape Contractor shall notify the Owner's Representative for clarification prior to proceeding on that portion of work.
3. All planting areas are to have weeds and competitive vegetation removed prior to preparation for planting.
4. All existing plant materials shall be protected during construction. Damaged materials shall be replaced in kind at the Contractor's expense.
5. Plant quantities are provided for Contractor's convenience only, plans shall take precedence.
6. The Owner's Representative shall approve all plant material prior to planting. In addition, the Owner's Representative reserves the right to refuse any plant material deemed unacceptable. The Owner's Representative is to approve any and all substitutions.
7. It is the Landscape Contractor's responsibility to locate all underground utilities prior to commencement of planting operations.
8. Planting installation shall be in accordance with City of Albuquerque standard specifications and details.
9. Native seed mix (non-irrigated) shall be installed in accordance with City of Albuquerque standard specifications (Section 1012 - Native Grass Seeding).
10. Planting areas shall be top dressed with 3" layer of 7/8" Santa Fe Brown rock mulch over DeWitt Pro-5 weed control fabric.

KEYED MAP

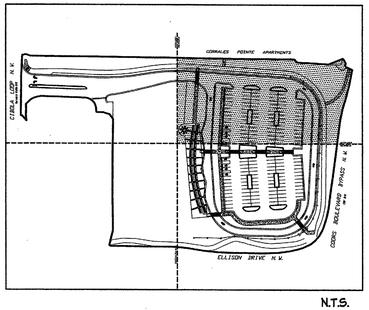

N.T.S.

PLANT LEGEND

Symbol	Scientific Name (Common Name)	Size
	Chitalpa tashkentensis (Chitalpa)	24" Box
	Crataegus phaenopyrum (Washington Hawthorn)	15-Gal
	Fraxinus oxycarpa 'Raywood' (Raywood Ash)	2" B&B
	Forestiera neomexicana (New Mexico Olive)	15-Gal
	Gleditsia triacanthos 'Imperial' (Imperial Honeylocust)	2" B&B
	Ulmus parvifolia 'Allee II' (Allee Lacebark Elm)	2" B&B
	Pyrus calleryana 'Aristocrat' (Aristocrat Pear)	2" B&B
	Quercus buckleyi (Texas Red Oak)	24" Box

Symbol	Scientific Name (Common Name)	Size
	Artemesia 'Powis Castle' ('Powis Castle' Sage)	1-Gal
	Baccharis 'Starn' (Thompson Baccharis)	5-Gal
	Caesalpinia gilliesii (Yellow Bird of Paradise)	5-Gal
	Caryopteris clandonensis (Blue Mist)	5-Gal
	Chrysothamnus nauseosus (Chamisa)	1-Gal
	Ericameria laricifolia (Turpentine Bush)	1-Gal
	Fallugia paradoxa (Apache Plume)	1-Gal
	Hesperaloe parviflora (Red Yucca)	1-Gal
	Juniperus sabina 'Buffalo' (Buffalo Juniper)	5-Gal
	Muhlenbergia cap. 'Regal Mist' (Regal Mist)	1-Gal

Symbol	Scientific Name (Common Name)	Size
	Nassella tenuissima (Threadgrass)	1-Gal
	Nolina texana Beargrass	5-Gal
	Oenothera berlandieri (Mexican Evening Primrose)	1-Gal
	Perovskia atriplicifolia (Russian Sage)	1-Gal
	Rhus trilobata (Three-leaf Sumac)	5-Gal
	Salvia greggii (Cherry Sage)	1-Gal

Symbol	Description
	Native Seed Mix COA Specification Section 1012-Native Grass Seeding
	Moss Rock boulders (3' average diameter)
	2" - 4" Cobble Mulch 6" depth over DeWitt Pro-5 weed control fabric

BHI JOB NO. 080024

CONSENSUS PLANNING
CONSENSUS PLANNING, INC.
Planning / Landscape Architecture
302 Eighth Street NW
Albuquerque, NM 87102
(505) 764-9801 Fax 842-5495
e-mail: cp@consensusplanning.com

Scale 1" = 20'

NORTH 10 0 20 40

Bohannan ▲ Huston
Courtyard I 7500 Jefferson St. NE Albuquerque, NM 87109-4335
ENGINEERING ▲ SPATIAL DATA ▲ ADVANCED TECHNOLOGIES

NO.	DATE	REMARKS	BY
		REVISIONS	
		DESIGN	

DESIGNED BY CG DATE 11/07
DRAWN BY MA DATE 11/07
CHECKED BY CG DATE 11/07

CITY OF ALBUQUERQUE
DEPARTMENT OF MUNICIPAL DEVELOPMENT

BAR 7 LOOP
PARK & RIDE
PLANTING PLAN

DESIGN REVIEW COMMITTEE: APPROVED DEC 3 4 2007 DESIGN REVIEW COMMITTEE

CITY ENGINEER APPROVAL: APPROVED DEC 3 4 2007 CITY ENGINEER

LAST DESIGN UPDATE | MO./DAY/YR. | MO./DAY/YR.

CITY PROJECT NO. 6065.01 | ZONE MAP NO. A-13-Z | SHEET L5 OF L7

AS-BUILT INFORMATION

	DATE
CONTRACTOR WORK STAKED BY	
INSPECTOR ACCEPTANCE BY	
FIELD VERIFICATION BY	
DRAWINGS CORRECTED BY	

MICRO-FILM INFORMATION

RECORDED BY DATE
NO. DATE

BENCH MARKS

SURVEY INFORMATION
FIELD NOTES

NO.	BY	DATE

ENGINEER'S SEAL
STATE OF NEW MEXICO
CHRISTOPHER J. GRELL
NEW MEXICO 14734 PROFESSIONAL ENGINEER
11-13-07

P:\01 Projects\1222-07_BHI-Seven Bar TC\ACAD\01_SB base65_7-18-07.dwg
Mon, 12-Nov-2007 - 5:23:pm, Plotted by: CHRIS

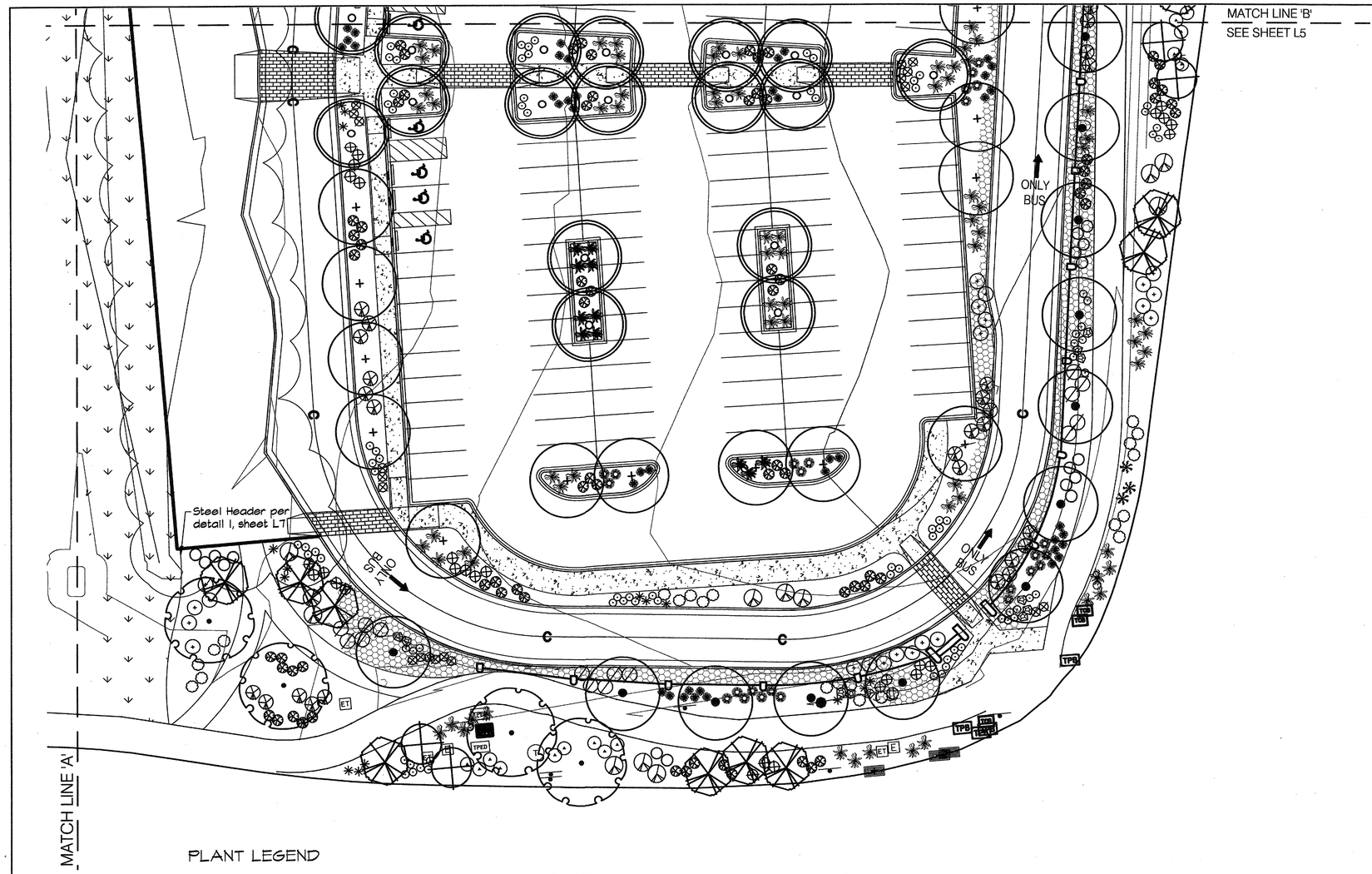

GENERAL LANDSCAPE NOTES

1. Prior to beginning work on the project, the Landscape Contractor shall review the project in the field with the Owner's Representative.
2. If discrepancies occur between the drawings and the site, the Landscape Contractor shall notify the Owner's Representative for clarification prior to proceeding on that portion of work.
3. All planting areas are to have weeds and competitive vegetation removed prior to preparation for planting.
4. All existing plant materials shall be protected during construction. Damaged materials shall be replaced in kind at the Contractor's expense.
5. Plant quantities are provided for Contractor's convenience only, plans shall take precedence.
6. The Owner's Representative shall approve all plant material prior to planting. In addition, the Owner's Representative reserves the right to refuse any plant material deemed unacceptable. The Owner's Representative is to approve any and all substitutions.
7. It is the Landscape Contractor's responsibility to locate all underground utilities prior to commencement of planting operations.
8. Planting installation shall be in accordance with City of Albuquerque standard specifications and details.
9. Native seed mix (non-irrigated) shall be installed in accordance with City of Albuquerque standard specifications (Section 1012 - Native Grass Seeding).
10. Planting areas shall be top dressed with 3" layer of 7/8" Santa Fe Brown rock mulch over DeNitt Pro-5 weed control fabric.

KEYED MAP

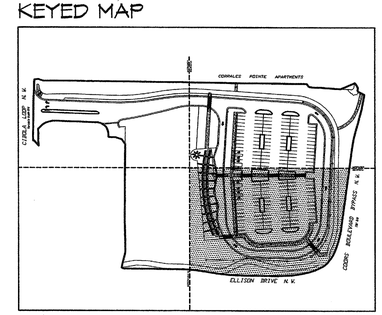

N.T.S.

PLANT LEGEND

Symbol	Scientific Name (Common Name)	Size
	Chitalpa tashkentensis (Chitalpa)	24" Box
	Crataegus phaenopyrum (Washington Hawthorn)	15-Gal
	Fraxinus oxycarpa 'Raynood' (Raynood Ash)	2" B&B
	Forestiera neomexicana (New Mexico Olive)	15-Gal
	Gleditsia triacanthos 'Imperial' (Imperial Honeylocust)	2" B&B
	Ulmus parvifolia 'Allee II' (Allee Lacebark Elm)	2" B&B
	Pyrus calleryana 'Aristocrat' (Aristocrat Pear)	2" B&B
	Quercus buckleyi (Texas Red Oak)	24" Box

Symbol	Scientific Name (Common Name)	Size
	Artemesia 'Powis Castle' ('Powis Castle' Sage)	1-Gal
	Baccharis 'Starn' (Thompson Baccharis)	5-Gal
	Caesalpinia gilliesii (Yellow Bird of Paradise)	5-Gal
	Caryopteris clandonensis (Blue Mist)	5-Gal
	Chrysothamnus nauseosus (Chamisa)	1-Gal
	Ericameria laricifolia (Turpentine Bush)	1-Gal
	Fallugia paradoxa (Apache Plume)	1-Gal
	Hesperaloe parviflora (Red Yucca)	1-Gal
	Juniperus sabina 'Buffalo' (Buffalo Juniper)	5-Gal
	Muhenbergia cap. 'Regal Mist' (Regal Mist)	1-Gal

Symbol	Scientific Name (Common Name)	Size
	Nassella tenuissima (Threadgrass)	1-Gal
	Nolina texana Beargrass	5-Gal
	Oenothera berlandieri (Mexican Evening Primrose)	1-Gal
	Perovskia atriplicifolia (Russian Sage)	1-Gal
	Rhus trilobata (Three-leaf Sumac)	5-Gal
	Salvia greggii (Cherry Sage)	1-Gal

Symbol	Description
	Native Seed Mix COA Specification Section 1012-Native Grass Seeding
	Moss Rock boulders (3' average diameter)
	2" - 4" Cobble Mulch 6" depth over DeNitt Pro-5 weed control fabric

Scale 1" = 20'

NORTH 10 0 20 40

Bohannan ▲ Huston

Courtyard I 7500 Jefferson St. NE Albuquerque, NM 87109-4335

ENGINEERING ▲ SPATIAL DATA ▲ ADVANCED TECHNOLOGIES

CITY OF ALBUQUERQUE
DEPARTMENT OF
MUNICIPAL DEVELOPMENT

BAR 7 LOOP
PARK & RIDE
PLANTING PLAN

DESIGN REVIEW COMMITTEE	CITY ENGINEER APPROVAL	LAST DESIGN UPDATE	MO./DAY/YR.	MO./DAY/YR.
APPROVED DEC 24 2007 DESIGN REVIEW COMMITTEE	APPROVED DEC 24 2007 CITY ENGINEER			

CITY PROJECT NO.	ZONE MAP NO.	SHEET	OF
6065.01	A-13-Z	L6	L7

CONSENSUS PLANNING, INC.
Planning / Landscape Architecture
302 Eighth Street NW
Albuquerque, NM 87102
(505) 764-9801 Fax 842-5495
e-mail: cp@consensusplanning.com

CONSENSUS PLANNING

BHI JOB NO. 080024

AS-BUILT INFORMATION

		DATE
CONTRACTOR WORK STAKED BY		
INSPECTOR'S ACCEPTANCE BY		DATE
FIELD VERIFICATION BY		DATE
DRAWINGS CORRECTED BY		DATE
MICRO-FILM INFORMATION		
RECORDED BY		DATE
NO.		DATE

BENCH MARKS

SURVEY INFORMATION

FIELD NOTES		
NO.	BY	DATE

ENGINEER'S SEAL

STATE OF NEW MEXICO CHRISTOPHER J. GREEN 14234 PROFESSIONAL ENGINEER 11-13-07

NO.	DATE	REMARKS	BY
		REVISIONS	
		DESIGN	

DESIGNED BY CG DATE 11/07
DRAWN BY MA DATE 11/07
CHECKED BY CG DATE 11/07

P:\01_Projects\1222-07_BHI-Seven Bar TC\ACAD\01_SB base65_7-18-07.dwg
Mon, 12-Nov-2007 - 5:24:pm, Plotted by: CHRIS

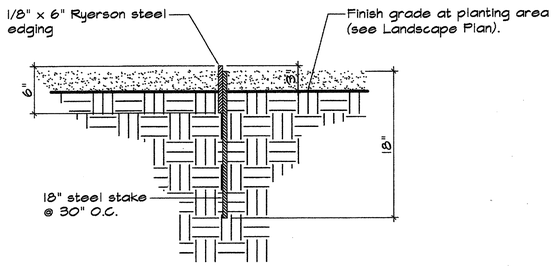

1 STEEL HEADER

N.T.S.

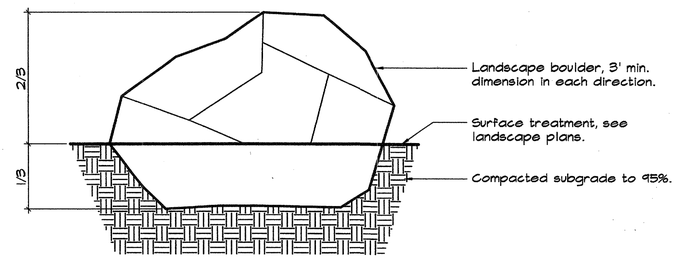

2 LANDSCAPE BOULDER

N.T.S.

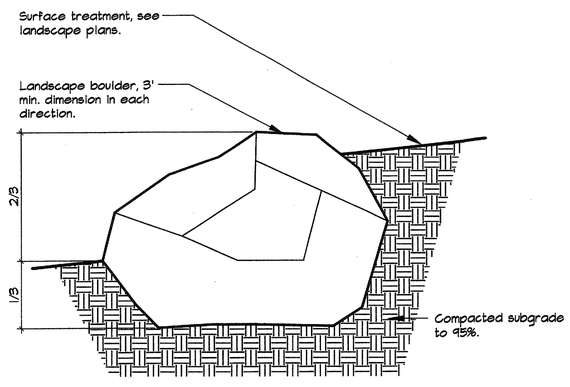

3 BOULDER RETAINING

N.T.S.

AS-BUILT INFORMATION

CONTRACTOR	DATE
WORK STAKED BY	DATE
INSPECTOR ACCEPTANCE BY	DATE
FIELD VERIFICATION BY	DATE
DRAWINGS CORRECTED BY	DATE

MICRO-FILM INFORMATION

RECORDED BY	DATE
NO.	DATE

BENCH MARKS

SURVEY INFORMATION

FIELD NOTES

NO.	BY	DATE

ENGINEER'S SEAL

STATE OF NEW MEXICO CHRISTOPHER J. GREEN 11234 PROFESSIONAL LANDSCAPE ARCHITECT

11.19.07

NO.	DATE	REMARKS	BY
		REVISIONS	
		DESIGN	

DESIGNED BY	CG	DATE 11/07
DRAWN BY	MA	DATE 11/07
CHECKED BY	CG	DATE 11/07

Bohannan ▲ Huston

Courtyard I 7500 Jefferson St. NE Albuquerque, NM 87109-4335

ENGINEERING ▲ SPATIAL DATA ▲ ADVANCED TECHNOLOGIES

CITY OF ALBUQUERQUE
DEPARTMENT OF
MUNICIPAL DEVELOPMENT

BAR 7 LOOP
PARK & RIDE
LANDSCAPE DETAILS

DESIGN REVIEW COMMITTEE	CITY ENGINEER APPROVAL	LAST DESIGN UPDATE	MO./DAY/YR.	MO./DAY/YR.
APPROVED DEC 24 2007 DESIGN REVIEW COMMITTEE	APPROVED DEC 24 2007 CITY ENGINEER			

CITY PROJECT NO.	ZONE MAP NO.	SHEET	OF
6065.01	A-13-Z	L7	L7

CONSENSUS PLANNING, INC.
Planning / Landscape Architecture
302 Eighth Street NW
Albuquerque, NM 87102
(505) 764-9801 Fax 842-5495
e-mail: cp@consensusplanning.com

CONSENSUS PLANNING

BHI JOB NO. 080024

P:\01_Projects\1222-07_BHI-Seven Bar TC\ACAD\01_SB base65_7-18-07.dwg
Mon, 12-Nov-2007 - 5:24 pm, Plotted by: CHRIS