CONSTRUCTION PLANS

FOR

NORTH BRYN MAWR AVENUE EXTENSION (WEST SIDE)

ALBUQUERQUE, NEW MEXICO

INDEX

SHEET NUMBER	DESCRIPTION
1	TITLE SHEET
2	PLAT
3	PAVING PLAN AND PROFILE SHEET
4 & 5	TRAFFIC CONTROL PLANS

FOR INFORMATION ONLY

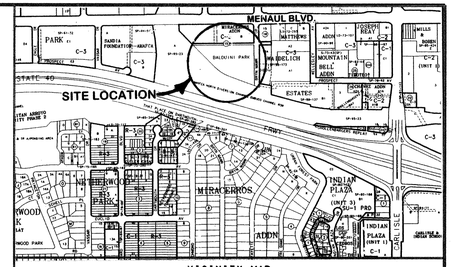

VICINITY MAP
NOT TO SCALE
H-16

NOTICE TO CONTRACTORS

1. ALL WORK DETAILED ON THESE PLANS TO BE PERFORMED UNDER CONTRACT SHALL, EXCEPT AS OTHERWISE STATED OR PROVIDED FOR HEREON, BE CONSTRUCTED IN ACCORDANCE WITH THE CITY OF ALBUQUERQUE STANDARD SPECIFICATIONS FOR PUBLIC WORKS CONSTRUCTION, 1986 EDITION AND SHALL INCLUDE UPDATE NO. 6

2. TWO WORKING DAYS PRIOR TO ANY EXCAVATION, THE CONTRACTOR MUST CONTACT NEW MEXICO ONE CALL SYSTEM (260-1990) FOR LOCATION OF EXISTING UTILITIES.

3. PRIOR TO CONSTRUCTION, THE CONTRACTOR SHALL EXCAVATE AND VERIFY THE HORIZONTAL AND VERTICAL LOCATIONS OF ALL OBSTRUCTIONS. SHOULD A CONFLICT EXIST, THE CONTRACTOR SHALL NOTIFY THE ENGINEER OR SURVEYOR IMMEDIATELY SO THAT THE CONFLICT CAN BE RESOLVED WITH A MINIMUM AMOUNT OF DELAY.

4. FIVE (5) WORKING DAYS PRIOR TO BEGINNING CONSTRUCTION, THE CONTRACTOR SHALL SUBMIT TO CONSTRUCTION COORDINATION DIVISION A DETAILED CONSTRUCTION SCHEDULE TWO (2) WORKING DAYS PRIOR TO CONSTRUCTION. THE CONTRACTOR SHALL OBTAIN A BARRICADING PERMIT FROM THE CONST. COORDINATION DIVISION. CONTRACTOR SHALL NOTIFY BARRICADE ENGINEER (768-2551) PRIOR TO OCCUPYING AN INTERSECTION. REFER TO SECTION 19 OF THE GENERAL CONDITIONS OF THE STANDARD SPECIFICATIONS.

5. ALL STREET STRIPING ALTERED OR DESTROYED SHALL BE REPLACED W/ PLASTIC REFLECTORIZED PAVEMENT MARKING BY CONTRACTOR TO LOCATION AS EXISTING OR AS INDICATED BY THIS PLAN SET.

6. CONTRACTOR SHALL NOTIFY THE ENGINEER NOT LESS THAN SEVEN (7) DAYS PRIOR TO STARTING WORK IN ORDER THAT THE CITY SURVEYOR MAY TAKE NECESSARY MEASURES TO INSURE THE PRESERVATION OF SURVEY MONUMENTS. CONTRACTOR SHALL NOT DISTURB PERMANENT SURVEY MONUMENTS WITHOUT THE CONSENT OF THE CITY SURVEYOR AND SHALL NOTIFY THE CITY SURVEYOR AND BEAR THE EXPENSE OF REPLACING ANY THAT MAY BE DISTURBED WITHOUT PERMISSION. REPLACEMENT SHALL BE DONE ONLY BY THE CITY SURVEYOR WHEN A CHANGE IS MADE IN THE FINISHED ELEVATIONS OF THE PAVEMENT OF ANY ROADWAY IN WHICH A PERMANENT SURVEY MONUMENT IS LOCATED. CONTRACTOR SHALL, AT HIS OWN EXPENSE, ADJUST THE MONUMENT COVER TO THE NEW GRADE UNLESS OTHERWISE SPECIFIED. REFER TO SECTION 4.4 OF THE GENERAL CONDITIONS OF THE STANDARD SPECIFICATIONS.

7. ANY WORK WITHIN AN ARTERIAL ROADWAY REQUIRES TWENTY-FOUR HOUR CONSTRUCTION.

8. CONTRACTOR SHALL MAINTAIN A GRAFFITI-FREE WORK SITE. CONTRACTOR SHALL PROMPTLY REMOVE ANY GRAFFITI FROM ALL EQUIPMENT, WHETHER PERMANENT OR TEMPORARY.

REV.	SHEETS	CITY ENGINEER	DATE	USER DEPARTMENT	DATE	USER DEPARTMENT	DATE

ENGINEERS STAMP & APPROVAL

JAMES R. TOPMILLER — NEW MEXICO — 9354 — REGISTERED PROFESSIONAL ENGINEER

6/17/99

APPROVALS	ENGINEER	DATE
DRC Chairman	Billy J. Goolsby	6-30-99
Transportation		6-24-99
Water/Wastewater	N/A	6-25-99
Hydrology		6/25/99
Parks		
Constr. Mngmt.		
Constr. Coord.		

APPROVED FOR CONSTRUCTION

City Engineer — Date 6/29/99

CITY PROJECT NO. 613081

SHEET 1 OF 35

BHI JOB NO. 10000010.01

BOHANNAN-HUSTON INC.
ENGINEERS • PLANNERS • PHOTOGRAMMETRISTS • SURVEYORS • LANDSCAPE ARCHITECTS
ALBUQUERQUE LAS CRUCES SANTA FE

USERNAME: CDP:[CDP.JUSTO.BRYN-2] BRYN-TL-2.GRF

COPYRIGHT BOHANNAN-HUSTON, INC. 1996
DATE:

1999029816
51697II
Page 2 of 2
03/05/1999 11:07A
Bk-99C Pg-44
Judy D. Woodward Bern. Co. PLAT R 12.00

PLAT OF TRACT A BALDUINI PARK

ALBUQUERQUE, BERNALILLO COUNTY, NEW MEXICO
JANUARY 1997

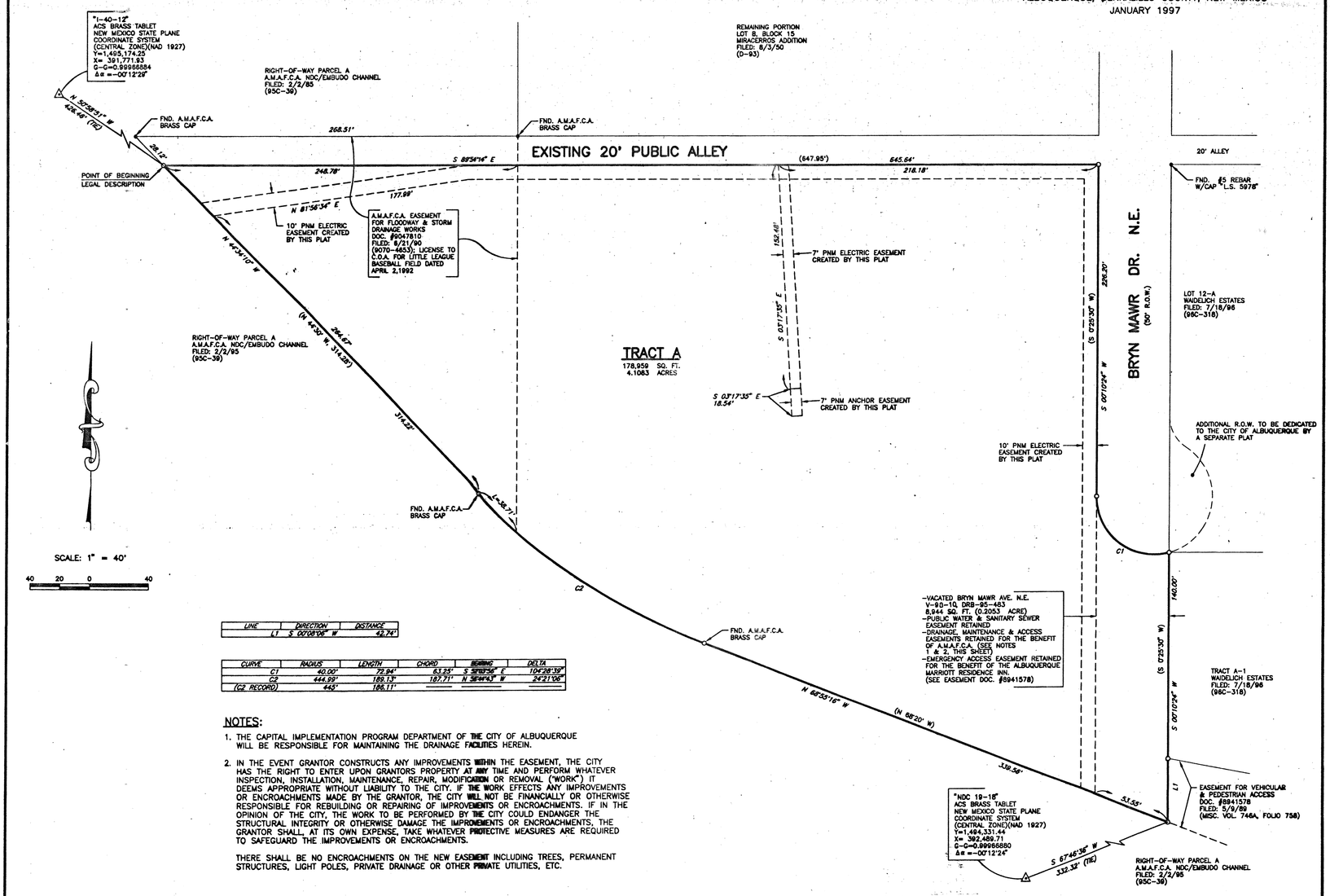

LINE	DIRECTION	DISTANCE
L1	S 00°08'06" W	42.74'

CURVE	RADIUS	LENGTH	CHORD	BEARING	DELTA
C1	40.00'	72.94'	63.25'	S 52°03'56" E	104°28'39"
C2	444.99'	189.13'	187.71'	N 56°44'43" W	24°21'06"
(C2 RECORD)	445'	186.11'			

NOTES:

1. THE CAPITAL IMPLEMENTATION PROGRAM DEPARTMENT OF THE CITY OF ALBUQUERQUE WILL BE RESPONSIBLE FOR MAINTAINING THE DRAINAGE FACILITIES HEREIN.
2. IN THE EVENT GRANTOR CONSTRUCTS ANY IMPROVEMENTS WITHIN THE EASEMENT, THE CITY HAS THE RIGHT TO ENTER UPON GRANTORS PROPERTY AT ANY TIME AND PERFORM WHATEVER INSPECTION, INSTALLATION, MAINTENANCE, REPAIR, MODIFICATION OR REMOVAL ("WORK") IT DEEMS APPROPRIATE WITHOUT LIABILITY TO THE CITY. IF THE WORK EFFECTS ANY IMPROVEMENTS OR ENCROACHMENTS MADE BY THE GRANTOR, THE CITY WILL NOT BE FINANCIALLY OR OTHERWISE RESPONSIBLE FOR REBUILDING OR REPAIRING OF IMPROVEMENTS OR ENCROACHMENTS. IF IN THE OPINION OF THE CITY, THE WORK TO BE PERFORMED BY THE CITY COULD ENDANGER THE STRUCTURAL INTEGRITY OR OTHERWISE DAMAGE THE IMPROVEMENTS OR ENCROACHMENTS, THE GRANTOR SHALL, AT ITS OWN EXPENSE, TAKE WHATEVER PROTECTIVE MEASURES ARE REQUIRED TO SAFEGUARD THE IMPROVEMENTS OR ENCROACHMENTS.

   THERE SHALL BE NO ENCROACHMENTS ON THE NEW EASEMENT INCLUDING TREES, PERMANENT STRUCTURES, LIGHT POLES, PRIVATE DRAINAGE OR OTHER PRIVATE UTILITIES, ETC.

Plat & Survey By:
ALBUQUERQUE SURVEYING CO. INC., 2119 Menaul Blvd. N.E., Albuquerque, New Mexico 87107 Ph. (505) 884-2036

SHEET 2 OF 2
1055P-1-BH

1999029816
51697II
Page 1 of 2
03/05/1999 11:07A
Bk-99C Pg-44
Judy D. Woodward Bern. Co. PLAT R 12.00

PLAT OF TRACT A BALDUINI PARK

ALBUQUERQUE, BERNALILLO COUNTY, NEW MEXICO
JANUARY 1997

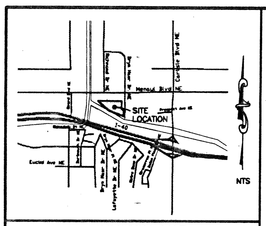

LOCATION MAP
ZONE ATLAS MAP NO. H-16-Z

SUBDIVISION DATA

1. CASE NO.: DRB-97-131
2. VACATION NO.: V-98-10
3. ZONE ATLAS INDEX NO.: H-16-Z
4. GROSS SUBDIVISION ACREAGE: 4.1083 ACRES
5. TOTAL NUMBER OF LOTS CREATED: 1 LOTS
6. DATE OF SURVEY: JANUARY, 1997
7. TALOS LOG NO.: SP-9701-2108-270064
8. TOTAL VACATION: 0.2053 ACRE

NOTES:

1. BEARINGS SHOWN ARE NEW MEXICO STATE PLANE GRID BEARINGS (CENTRAL ZONE). BEARINGS AND DISTANCES SHOWN IN PARENTHESES ARE RECORD DATA.
2. DISTANCES ARE GROUND DISTANCES.
3. UNLESS OTHERWISE INDICATED, ALL BOUNDARY CORNERS SHOWN THUS —o— ARE MARKED WITH A P.K. NAIL W/SHINER, SCRIBED "X" IN CONCRETE OR AN IRON STAKE SURMOUNTED WITH A CAP STAMPED "P.S. 10464".
4. THE DATA SHOWN HEREON IS FROM AN ACTUAL FIELD SURVEY.
5. THE PURPOSE OF THIS PLAT IS TO INCORPORATE A PORTION OF VACATED BRYN MAWR DRIVE, N.E. INTO TRACT A, BALDUINI PARK.

PUBLIC UTILITY EASEMENTS

PUBLIC UTILITY EASEMENTS shown on this plat are granted for the common and joint use of:

1. The PNM Electric Services for the installation, maintenance, and service of overhead and underground electrical lines, transformers, poles and any other equipment, fixtures, structures and related facilities reasonably necessary to provide electrical service.
2. Jones Intercable for the installation, maintenance, and service of such lines, cable, and other related equipment and facilities reasonably necessary to provide Cable TV service.
3. U.S. West for the installation, maintenance, and service of all buried and aerial communication lines and other related equipment and facilities reasonably necessary to provide communication services, including but not limited to above ground pedestals and closures.
4. The PNM Gas Services for installation, maintenance, and service of natural gas lines, valves and other equipment and facilities reasonably necessary to provide natural gas.

Included is the right to build, rebuild, construct, reconstruct, locate, relocate, change, remove, modify, renew, operate, and maintain facilities for the purposes described above, together with free access to, from, and over said easements, including sufficient working area space for electric transformers, with the right and privilege to trim and remove trees, shrubs or bushes which interfere with the purposes set forth herein. No building, sign, pool (aboveground or subsurface), hot tub, concrete or wood pool decking, or other structure shall be erected or constructed on said easements nor shall any well be drilled or operated thereon. Property owners shall be solely responsible for correcting any violations of National Electrical Safety Code caused by construction of pools, decking, or any structures adjacent to, within or near easements shown on this plat.

PNM ELECTRIC/GAS SERVICES DISCLAIMER

In approving this plat, PNM ELECTRIC/GAS SERVICES do not waive or release any easement or easement rights which may have been granted by prior plat, replat, or other document which are not shown on this plat.

THIS IS TO CERTIFY THAT TAXES ARE CURRENT AND PAID ON UPC#: 1-016-059-361-225-41605

PROPERTY OWNER OF RECORD: City of Albuquerque

BERNALILLO COUNTY TREASURER'S OFFICE: Josephine M. Sena 3-5-99

LEGAL DESCRIPTION

Being that certain parcel of land situated within Section 10, Township 10 North, Range 3 East, New Mexico Principal Meridian, Albuquerque, Bernalillo County, New Mexico, being identified as the Park in Block 15, Miracerros Addition, as said Park is shown and designated on "PLAT OF MIRACERROS, AN ADDITION TO THE CITY OF ALBUQUERQUE, NEW MEXICO", filed in the Office of the County Clerk, Bernalillo County, New Mexico, on August 3, 1950, in Volume D, Folio 93; together with the portion of Bryn Mawr Avenue NE vacated by Vacation V-98-66; and being more particularly described as follows:

Beginning at the northwest corner of the parcel of land herein described being a point at the intersection of the southerly line of 20 foot wide public alley and the northerly right of way line of AMAFCA North Diversion Channel/Embudo Channel Right of Way Parcel A, whence the ACS/NMSHC Control Station "I-40-12" bears N. 50° 58' 51" W., 426.46 feet distance; thence,

S. 89° 54' 14" E., 645.64 feet distance to the northeast corner of the parcel of land herein described being a point at the intersection of the southerly line of 20 foot wide public alley and the westerly right of way line of Bryn Mawr Drive NE; thence,

S. 00° 10' 24" W., 226.20 feet distance to the point of curvature; thence,

Southeasterly, 72.94 feet distance along the arc of a curve bearing to the left (said arc having a radius of 40.00 feet, a central angle of 104° 28' 39" and a chord which bears S. 52° 03' 56" E., 63.25 feet distance) to a point; thence,

S. 00° 10' 24" W., 140.00 feet distance to a point; thence,

S. 00° 08' 06" W., 42.74 feet distance to the southeast corner of the parcel of land herein described being a point on the northerly right of way line of AMAFCA North Diversion Channel/Embudo Channel Right of Way Parcel A; thence,

N. 68° 55' 16" W., 339.56 feet distance to the point of curvature; thence,

Northwesterly, 189.13 feet distance along the arc of a curve bearing to the right (said arc having a radius of 444.99 feet, a central angle of 24° 21' 06" and a chord which bears N. 56° 44' 43" W., 187.71 feet distance) to the point of tangency; thence,

N. 44° 34' 10" W., 314.22 feet distance to the northwest corner and point of beginning of the parcel of land herein described and containing 178,959 square feet (4.1083 acres), more or less.

OWNER'S CERTIFICATE

THE SUBDIVISION SHOWN HEREON IS WITH THE FREE CONSENT AND IN ACCORDANCE WITH THE DESIRES OF THE UNDERSIGNED OWNER(S) AND/OR PROPRIETOR(S) THEREOF AND SAID OWNER(S) AND/OR PROPRIETOR(S) DO HEREBY GRANT ALL ACCESS, UTILITY AND DRAINAGE EASEMENTS SHOWN HEREON. SAID OWNER(S) AND/OR PROPRIETOR(S) DO HEREBY CONSENT TO ALL OF THE FOREGOING AND DO HEREBY CERTIFY THAT THIS SUBDIVISION IS THEIR FREE ACT AND DEED.

FOR TRACT A, BALDUINI PARK

BY: _____ 3/31/98
DATE

CITY OF ALBUQUERQUE
LAWRENCE D. RAEL, Chief Administrative Officer
P.O. Box 1293
Albuquerque, New Mexico 87103

ACKNOWLEDGEMENT

STATE OF New Mexico
COUNTY OF Bernalillo } ss.

THIS INSTRUMENT WAS ACKNOWLEDGED BEFORE ME ON 31st DAY OF March 1998, BY LAWRENCE D. RAEL, CHIEF ADMINISTRATIVE OFFICER, FOR THE CITY OF ALBUQUERQUE, NEW MEXICO, A MUNICIPAL CORPORATION, ON BEHALF OF SAID MUNICIPAL CORPORATION.

MY COMMISSION EXPIRES: 11/15/2002
Renie Carmona
NOTARY PUBLIC
STATE OF NEW MEXICO
My Commission Expires 11/15/2002

NOTARY PUBLIC

APPROVED AND ACCEPTED BY:

SP-99-58
SUBDIVISION PLAT NO.

	CITY	COUNTY
PLANNING DIRECTOR – ALBUQUERQUE/BERNALILLO COUNTY DEVELOPMENT REVIEW BOARD	11-12-98	11-17-98
CITY ENGINEER	3-23-98	3-11-98
A.M.A.F.C.A.	4-1-98	4-15-97
TRAFFIC ENGINEER	11-17-98	4-15-97
FACILITIES DEVELOPMENT DIVISION CITY OF ALBUQUERQUE PUBLIC WORKS	11-17-98	4-15-97
CITY PARKS DESIGN AND DEVELOPMENT, CIP	3-31-98	
PROPERTY MANAGEMENT	10-28-98	10-28-98
CITY SURVEYOR	4-9-98	10-28-98
PNM ELECTRIC SERVICES	4-9-98	
PNM GAS SERVICES	11-09-98	
U.S. WEST COMMUNICATIONS	10/29/98	
JONES INTERCABLE, INC.		

SURVEYOR'S CERTIFICATION

I, VLADIMIR JIRIK, A DULY QUALIFIED PROFESSIONAL SURVEYOR REGISTERED UNDER THE LAWS OF THE STATE OF NEW MEXICO, DO HEREBY CERTIFY THAT THIS PLAT WAS PREPARED BY ME OR UNDER MY DIRECT SUPERVISION, SHOWS ALL EASEMENTS MADE KNOWN TO ME BY THE OWNER, UTILITY COMPANIES OR OTHER PARTIES EXPRESSING AN INTEREST AND THAT THE SURVEY MEETS THE MINIMUM REQUIREMENTS FOR MONUMENTATION AND SURVEYS OF THE CITY OF ALBUQUERQUE SUBDIVISION ORDINANCE AND IS TRUE AND CORRECT TO THE BEST OF MY KNOWLEDGE AND BELIEF.

PROFESSIONAL SURVEYOR STATE OF NEW MEXICO NO. 10464 VLADIMIR JIRIK

VLADIMIR JIRIK, N.M.P.S. NO. 10464 — DATE

FOR INFORMATION ONLY

CPN 613081 2 of 5

Plat & Survey By:
ALBUQUERQUE SURVEYING CO. INC., 2119 Menaul Blvd. N.E., Albuquerque, New Mexico 87107 Ph. (505) 884-2036

SHEET 1 OF 2
1055P-1-BH

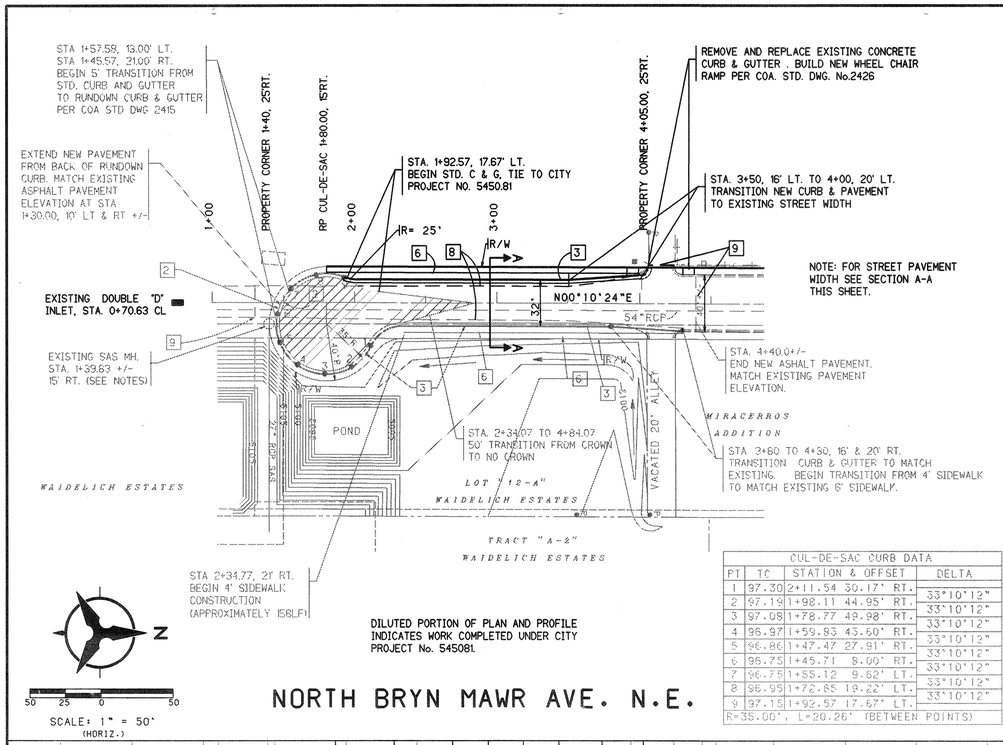

NORTH BRYN MAWR AVE. N.E.

CUL-DE-SAC CURB DATA			
PT	TC	STATION & OFFSET	DELTA
1	97.30	2+11.54 30.17' RT.	33°10'12"
2	97.19	1+98.11 44.95' RT.	33°10'12"
3	97.08	1+78.77 49.98' RT.	33°10'12"
4	96.97	1+59.83 43.60' RT.	33°10'12"
5	96.86	1+47.47 27.91' RT.	33°10'12"
6	96.75	1+45.71 8.00' RT.	33°10'12"
7	96.75	1+55.12 9.62' LT.	33°10'12"
8	96.95	1+72.65 19.22' LT.	33°10'12"
9	97.15	1+92.57 17.67' LT.	33°10'12"
R=35.00', L=20.26' (BETWEEN POINTS)			

REMOVAL AND DISPOSAL OF EXISTING ASPHALT SHALL EXTEND BETWEEN STATIONS 1+92.57 TO 4+00.00 SAW CUT ALL REMOVAL JOINT LOCATIONS. (SEE KEYED NOTE THIS SHEET)

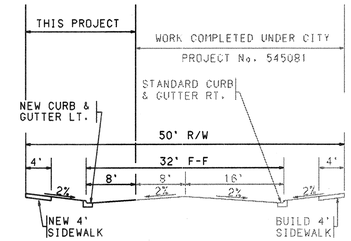

STREET SECTION A-A

NO SCALE

NOTE:
IF THE R-VALUE IS LESS THAN 50 THE CONTRACTOR SHALL NOTIFY THE ENGINEER IMEDIATELY AT 823-1000 FOR A REVISED PAVEMENT SECTION.

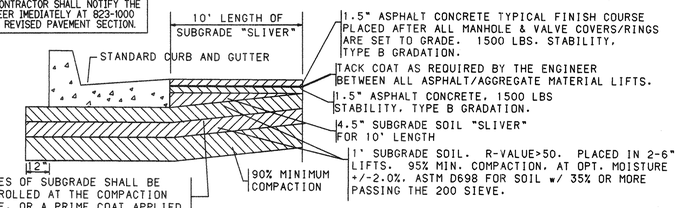

FINISH SURFACES OF SUBGRADE SHALL BE MOISTURE CONTROLLED AT THE COMPACTION MOISTURE RANGE, OR A PRIME COAT APPLIED AS REQUIRED BY THE ENGINEER UNTIL NEXT/ FINAL SURFACING IS COMPLETED. SUBGRADE PREPARATION SHALL BE PERFORMED AFTER ALL SUBSURFACE R/W UTILITIES CONSTRUCTION ARE COMPLETED.

TYPICAL PAVEMENT SECTION

NO SCALE (REFER TO COA STD DWG 2405)
AS APPROVED UNDER COA #5316-91

NOTES

1. ALL CURVE DATA AND DIMENSIONS REFER TO FACE OF CURB UNLESS OTHERWISE SPECIFIED.

2. GRADE ELEVATIONS, WHERE NOTED, ARE FOR TOP OF STANDARD CURB UNLESS OTHERWISE SPECIFIED.

3. ANY ADDITIONAL GRADING REQUIRED TO MATCH PROPOSED STREET GRADES AND R/W WITH EXISTING GROUND SHALL BE INCIDENTAL TO PAVING ITEMS.

4. CONTRACTOR SHALL PARK EQUIPMENT AND VEHICLES AS NOT TO INTERFERE WITH NORMAL ACTIVITIES OF RESIDENTS OR OTHER CONTRACTORS ON SITE.

5. ANY DAMAGE TO THE EXSTING FACILITIES (CURB AND GUTTER, PAVEMENT, CONDUITS, LANDSCAPING, UTILITY LINES, ETC.) DURING CONSTRUCTION SHALL BE REPLACED AT THE CONTRACTORS EXPENSE.

6. REMOVAL OF THE EXISTING CURB AND GUTTER SHALL BE AS PER COA. STD. DWG. 2415 (SAWCUT ONLY).

9. SIDEWALK CONSTRUCTION SHALL HAVE A 2% CROSS SLOPE.

10. WHEN ABUTTING NEW CURB AND GUTTER TO EXISTING PAVEMENT, A 1' WIDE SECTION OF EXISTING PAVEMENT ADJACENT TO THE CURB AND GUTTER SHALL BE SAWCUT, REMOVED, AND REPLACED AS PER THE STANDARD SPECIFICATIONS.

11. ALL SAWCUT PAVEMENT SHALL HAVE A UNIFORM EDGE AND BE SPRAYED WITH TACK.

12. BY BIDDING ON THE PROJECT, THE CONTRACTOR ACKNOWLEDGES THAT HE HAS FAMILIARIZED HIMSELF WITH THE EXISTING SITE CONDITIONS, AND CONTENTS OF THE CONSTRUCTION DOCUMENTS PACKAGE. THIS FAMILIARIZATION IS EXCLUSIVE OF BUT NOT LIMITED TO LOCATIONS OF RUBBLE, POWER POLES, GUY WIRES OVERHEAD POWERLINES, UNDERGROUND UTILITIES, AND SIGNAGE ARE TO REMAIN UNDISTURBED UNDER THIS CONTRACT, UNLESS NOTED OTHERWISE. IT IS THE CONTRACTOR'S RESPONSIBILITY TO COORDINATE ALL EARTHWORK AND UTILITY CONSTRUCTION ACTIVITIES TO INSURE THAT ALL EXISTING FACILITIES REMAIN UNDISTURBED, (UNLESS NOTED OTHERWISE), AND THAT SAFETY PRECAUTIONS ARE IMPLEMENTED AND STRICTLY ADHERED TO.

FOR INFORMATION ONLY

KEYED NOTES

1. NOT USED
2. BUILD RUNDOWN CURB AS PER STD. DWG. 2415
3. BUILD STD. CURB & GUTTER AS PER STD. DWG. 2415
4. NOT USED
5. NOT USED
6. BUILD 4' SIDEWALK AS PER STD. DWG. 2430
7. NOT USED
8. EDGE OF EXISTING PAVEMENT
9. LIMITS OF ASPHALT REMOVE & REPLACE. NEW ASPHALT PAVEMENT SHALL MEET EXISTING PAVEMENT ELEV. SAW CUT BEFORE REMOVING ASPHALT.

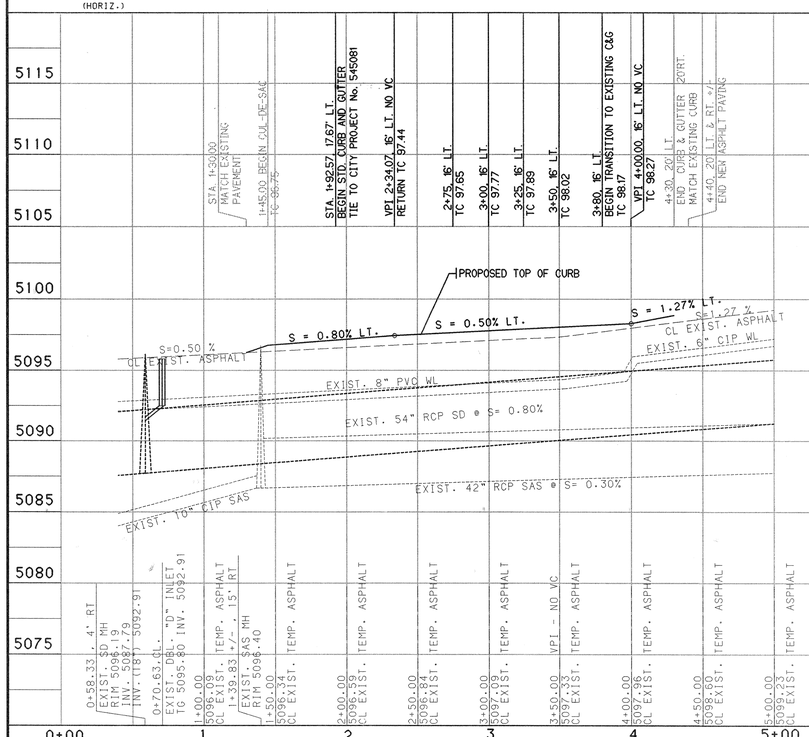

USERNAME: CDP:[CDP.JUSTO.BRYN-2]BRYN-PNP-2.GRF

BHI JOB NO. 1000001U.G1

AS-BUILT INFORMATION
CONTRACTOR
WORK STAKED BY
INSPECTOR'S ACCEPTANCE BY — DATE
FIELD VERIFICATION BY — DATE
DRAWINGS CORRECTED BY — DATE
MICRO-FILM INFORMATION
RECORDED BY — DATE
NO.

BENCH MARKS
NMSHC/ACS BRASS TABLET STAMPED "I-40-11"
GEOGRAPHIC POSITION (NAD 1927)
N.M. STATE PLANE COORDINATES (CENTRAL ZONE)
X=394,232.08 Y=1,493,896.40
GROUND TO GRID FACTOR = 0.99966724
ELEVATION = 5135.46'

SURVEY INFORMATION
FIELD NOTES
NO. | BY | DATE

ENGINEER'S SEAL
JAMES R. TOFMILLER
NEW MEXICO
9354
REGISTERED PROFESSIONAL ENGINEER
6/29/99

NO.	DATE	REMARKS
		REVISIONS
		DESIGN

DESIGNED BY	BJS	DATE 6/99
DRAWN BY	SAR & ORO	DATE 6/99
CHECKED BY	JRT	DATE 6/99

BOHANNAN-HUSTON INC.
ENGINEERS • PLANNERS • PHOTOGRAMMETRISTS • SURVEYORS • LANDSCAPE ARCHITECTS
ALBUQUERQUE LAS CRUCES SANTA FE

CITY OF ALBUQUERQUE
PUBLIC WORKS DEPARTMENT
ENGINEERING DEVELOPMENT GROUP

I-40 HOMESTEAD VILLAGE
PAVING PLAN & PROFILE
NORTH BRYN MAWR AVE. N.E.

DESIGN REVIEW COMMITTEE — APPROVED — CITY ENGINEER
CITY ENGINEER APPROVAL — APPROVED — DESIGN REVIEW COMMITTEE
LAST DESIGN UPDATE — MO./DAY/YR. — MO./DAY/YR.

CITY PROJECT NO. 613081
ZONE MAP NO. H-16
SHEET 3 OF 35

COPYRIGHT BOHANNAN-HUSTON, INC. 1996
DATE:

CONSTRUCTION TRAFFIC CONTROL GENERAL NOTES

1. CONTRACTOR MUST OBTAIN FROM CONSTRUCTION COORDINATION AN EXCAVATION/BARRICADING PERMIT BEFORE ENGAGING IN ANY CONSTRUCTION, MAINTENANCE OR REPAIR WORK IN ANY OF THE CITY OF ALBUQUERQUE'S RIGHTS-OF-WAY. EMERGENCY WORK THAT WOULD PRESERVE LIFE OR PROPERTY IS EXCLUDED WITH THE UNDERSTANDING, THAT A PERMIT SHALL BE OBTAINED WITHIN 24 TO 48 HOURS.

2. CONTRACTOR SHALL AT THE TIME OF PERMIT REQUEST, SUBMIT FOR APPROVAL BY CONSTRUCTION COORDINATION, A TRAFFIC CONTROL PLAN DETAILING ALL EXISTING TOPOGRAPHY SUCH AS LANE WIDTHS, DRIVEWAYS, AND BUSINESS/RESIDENTIAL ACCESSES. THE TRAFFIC CONTROL PLAN SHALL INCLUDE ALL PHASES OF WORK AND SCHEDULES INVOLVED IN THE CONSTRUCTION PROJECT. ANY SEPARATE PHASES OF A CONSTRUCTION PROJECT SHALL BE GIVEN AN INDIVIDUAL PERMIT EACH. BLANKET PERMITS WILL NOT BE ISSUED.

3. THESE TYPICAL TRAFFIC CONTROL PLANS DO NOT REFLECT THE EXISTING TOPOGRAPHY SUCH AS DRIVEWAYS, LANE WIDTHS, AND BUSINESS/RESIDENTIAL ACCESSES. EVERY LOCATION THAT REQUIRES CONSTRUCTION TRAFFIC CONTROL SHALL HAVE A DETAILED TRAFFIC CONTROL PLAN SHOWING ALL EXISTING TOPOGRAPHY.

4. CONSTRUCTION SHALL NOT BEGIN UNLESS A TRAFFIC CONTROL PLAN HAS BEEN APPROVED AND VERIFIED BY CONSTRUCTION COORDINATION.

5. CONSTRUCTION COORDINATION SHALL BE NOTIFIED 48 HOURS PRIOR TO ANY TRAFFIC CONTROL CHANGES NEEDED BY CONTRACTOR, THAT WERE NOT PREVIOUSLY APPROVED. THESE TRAFFIC CONTROL CHANGES SHALL BE REQUESTED IN WRITING ACCOMPANIED WITH A TRAFFIC CONTROL PLAN REFLECTING SUCH CHANGES.

6. ALL CONSTRUCTION TRAFFIC CONTROL DEVICES SHALL COMPLY TO THE MANUAL ON UNIFORM TRAFFIC CONTROL DEVICES (MUTCD), LATEST EDITION. IT IS THE RESPONSIBILITY OF THE CONTRACTOR TO INSTALL, SERVICE AND MAINTAIN ALL TRAFFIC CONTROL DEVICES. TRAFFIC CONTROL DEVICES SHALL NOT BE REMOVED OR ALTERED IN ANY WAY WITHOUT THE APPROVAL OF CONSTRUCTION COORDINATION, PER SECTION 6A-4 OF THE MUTCD, LATEST EDITION.

7. THE CONSTRUCTION TRAFFIC CONTROL INITIAL SET-UP SHALL BE BY AN AMERICAN TRAFFIC SAFETY SERVICES ASSOCIATION (ATSSA) CERTIFIED WORKSITE TRAFFIC SUPERVISOR. THE MAINTENANCE AND SERVICING SHALL ALSO BE DONE BY AN ATSSA CERTIFIED WORKSITE TRAFFIC SUPERVISOR OR EQUIVALENT.

8. CONTRACTOR IS RESPONSIBLE TO MAINTAIN AND SERVICE ALL TRAFFIC CONTROL DEVICES 24 HOURS A DAY, 7 DAYS A WEEK THROUGHOUT LENGTH OF PROJECT. CONTRACTOR IS RESPONSIBLE THAT ALL TRAFFIC CONTROL DEVICES COMPLY WITH THE MUTCD, LATEST EDITION.

9. ALL ADVANCE WARNING SIGNS SHALL BE DOUBLE INDICATED WHENEVER THERE ARE MULTI-LANE TRAFFIC IN ANY ONE GIVEN DIRECTION AND THERE IS SUFFICIENT MEDIAN SPACE.

10. ALL BARRICADES IN ALL TAPERS AND TANGENTS SHALL BE PLACED APART, A DISTANCE MEASURED IN FEET, EQUAL TO THAT OF THE POSTED SPEED LIMIT. NO EXCEPTIONS UNLESS APPROVED BY CONSTRUCTION COORDINATION PER MUTCD SECTION 6A-4.

11. ALL WORK IN ARTERIAL ROADWAYS SHALL BE ON A CONTINUOUS 24 HOUR PER DAY BASIS UNTIL COMPLETED. 1

12. CONTRACTOR IS RESPONSIBLE TO PROVIDE CONSTRUCTION COORDINATION, A WEEKLY LOG OF DAILY INSPECTIONS OF BARRICADE AND MAINTENANCE SCHEDULES ON PROJECTS THAT ARE OVER ONE WEEK DURATION.

13. EQUIPMENT OR MATERIALS SHALL NOT BE STORED WITHIN 15 FEET OF A TRAVELLED TRAFFIC LANE DURING NON-WORKING HOURS WITHOUT THE APPROVAL OF CONSTRUCTION COORDINATION.

14. CONTRACTOR SHALL PROVIDE AND MAINTAIN A SAFE AND ADEQUATE MEANS OF CHANNELIZING PEDESTRIAN TRAFFIC AROUND AND THROUGH THE CONSTRUCTION AREA.

15. CONTRACTOR IS RESPONSIBLE FOR OBLITERATION OF ANY CONFLICTING STRIPING AND RESPONSIBLE FOR ALL TEMPORARY STRIPING.

16. CONTRACTOR SHALL MAINTAIN ACCESS TO ALL FACILITIES, BUSINESSES AND/OR RESIDENTS AT ALL TIMES.

17. CONTRACTOR SHALL PROVIDE ACCESS SIGNS FOR BUSINESSES LOCATED WITHIN THE CONSTRUCTION AREA UNDER THE SUPERVISION OF CONSTRUCTION COORDINATION. EACH ACCESS SIGN SHALL HAVE 5 INCH, WHITE OPAQUE LETTERING ON BLUE REFLECTORIZED BACKGROUND. ACCESS SIGNS SHALL BE CONSIDERED INCIDENTAL TO THE BID AND NOT PART OF THE CONTRACT UNLESS OTHERWISE STATED. NO MORE THAN 3 BUSINESSES SHALL BE LISTED ON A ACCESS SIGN. SHOPPING CENTERS AND MALLS SHALL BE LISTED AS SUCH.

18. ALL ADVANCE WARNING SIGNS SHALL MEET THE MINIMUM REFLECTIVE INTENSITY REQUIREMENTS SET FORTH BY THE CITY OF ALBUQUERQUE. CONSTRUCTION COORDINATION SHALL DETERMINE ALL REQUIREMENTS AND APPROVE OR DISAPPROVE ANY ADVANCE WARNING SIGN PER SECTION 6A-4 OF THE MUTCD, LATEST EDITION.

19. 2 48 HOURS PRIOR TO OCCUPYING OR CLOSING OF A RIGHT-OF-WAY, CONTRACTOR SHALL NOTIFY: POLICE, FIRE DEPARTMENT, SCHOOLS, HOSPITALS, TRANSIT AUTHORITY, BUSINESSES AND/OR RESIDENTS THAT WILL BE AFFECTED BY THE CONSTRUCTION.

20. ANY FIELD ADJUSTMENTS SHALL BE APPROVED BY CONSTRUCTION COORDINATION.

21. EXCAVATIONS SHALL BE PLATED, TEMPORARILY PATCHED OR RESURFACED PRIOR TO OPENING OF TRAFFIC. A MINIMUM OF 11 FEET SHALL BE PROVIDED FOR TRAFFIC IN ANY GIVEN DIRECTION. CONTRACTOR IS RESPONSIBLE FOR ANY WORK INVOLVED IN SATISFYING THESE REQUIREMENTS.

22. CONTRACTOR SHALL AT ALL TIMES COMPLY WITH THE FOLLOWING:
    1. STANDARDS AND REQUIREMENTS SET FORTH IN THE MANUAL ON UNIFORM TRAFFIC CONTROL DEVICES, LATEST EDITION.
    2. THE CITY OF ALBUQUERQUE TRAFFIC CODE, LATEST EDITION.
    3. SECTION 19 OF THE CITY OF ALBUQUERQUE'S STANDARD SPECIFICATIONS FOR PUBLIC WORK CONSTRUCTION, AS WELL AS OTHER SECTIONS.

23. FAILURE TO COMPLY WITH ANY OF THE ABOVE MENTIONED, WILL BE ADEQUATE CAUSE TO CEASE ALL WORK ON ANY CONSTRUCTION PROJECT. WORK WILL NOT RESUME UNTIL ALL REQUIREMENTS ARE ADDRESSED AND APPROVED BY CONSTRUCTION COORDINATION.

24. ALL TRAFFIC CONTROL DEVICES SHALL BE KEPT IN NEW-CLEAN CONDITION. WASHING OF EQUIPMENT IS INCIDENTAL TO IT'S PLACEMENT AND MAINTENANCE.

25. TRAFFIC CONTROL STANDARDS APPLY ONLY WHERE THE CONSTRUCTION TRAFFIC CONTROL PLANS ARE NOT SPECIFIC.

26. ADVANCE WARNING SIGNS SHALL BE 36"x36" MIN. WITH SUPER ENGINEERING GRADE SHEETING OR BETTER. MOUNTING HEIGTH AT TOP OF SIGN SHALL BE THE SAME AS FOR A 48" SIGN AS INDICATED IN THE M.U.T.C.D. 3

27. CONTRACTOR SHALL MAINTAIN A GRAFFITI-FREE WORKSITE. ALL GRAFFITI SHALL BE PROMPTLY REMOVED FROM ALL EQUIPMENT, BOTH PERMANENT AND TEMPORARY. 4

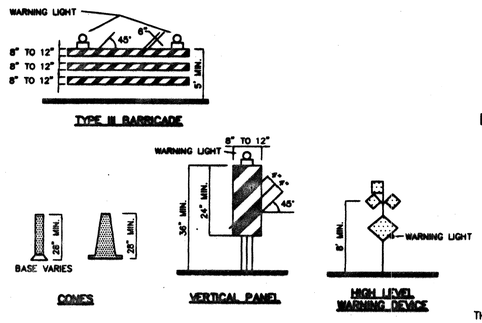

LEGEND

- WORK AREA
- BARRICADE – TYPE I, TYPE II, OR BARREL
- BARRICADE – TYPE III
- X VERTICAL PANEL
- WARNING SIGN
- D DISTANCE BETWEEN SIGNS – A DISTANCE MEASURED IN FEET EQUAL TO A VALUE OF TEN TIMES THE SPEED LIMIT OF THE STREET
- FLAGMAN POSITION
- S SPACING BETWEEN BARRICADES– A DISTANCE MEASURED IN FEET EQUAL TO THE SPEED LIMIT OF THE STREET
- L TAPER LENGTH – SEE CHART BELOW

THE TANGENT LENGTH IS EQUAL TO THE TAPER LENGTH FOR A GIVEN STREET.

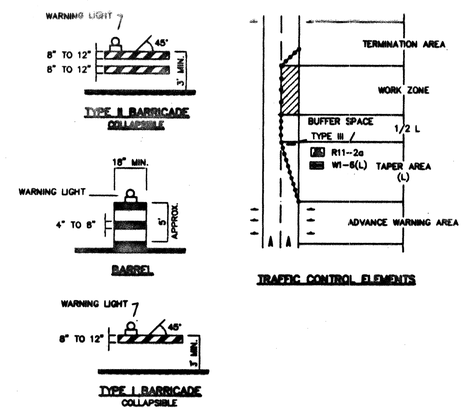

TAPER REQUIREMENTS

SPEED LIMIT (MPH)	TAPER LENGTH (L) (FEET)			MINIMUM NUMBER OF DEVICES FOR TAPER	MAXIMUM DEVICE SPACING IN FEET	
	10' LANE	11' LANE	12' LANE		ALONG TAPER	AFTER TAPER
20	70	75	80	5	20	20
25	105	115	125	6	25	25
30	150	165	180	7	30	30
35	205	225	245	8	35	35
40	270	295	320	9	40	40
45	450	495	540	13	45	45
50	500	550	600	13	50	50
55	550	605	660	13	55	55

RECOMMENDED SIGN SPACING(D) FOR ADVANCE WARNING SIGN SERIES

SPEED MILES PER HOUR	MINIMUM DISTANCE IN FEET BETWEEN SIGNS	FROM LAST SIGN TO TAPER
0-20	10 X SPEED LIMIT	10 X SPEED LIMIT
25-30	10 X SPEED LIMIT	10 X SPEED LIMIT
30-35	10 X SPEED LIMIT	10 X SPEED LIMIT
40-45	10 X SPEED LIMIT	10 X SPEED LIMIT
50-60	10 X SPEED LIMIT	10 X SPEED LIMIT

TAPER CRITERIA

TYPE OF TAPER	TAPER LENGTH
UPSTREAM TAPER:	
MERGING TAPER	L MINIMUM
SHIFTING TAPER	1/2 L MINIMUM
SHOULDER TAPER	1/2 L MINIMUM
TWO-WAY TRAFFIC TAPER	100 FEET MAXIMUM
DOWNSTREAM TAPERS	100 FEET PER LANE

TAPER LENGTH COMPUTATION

SPEED LIMIT	
40 MPH OR LESS	$L = \frac{WS^2}{60}$
45 MPH OR GREATER	$L = W \times S$

L = TAPER LENGTH
W = WIDTH OF OFFSET IN FEET
S = POSTED SPEED OR OFF-PEAK 85-PERCENTILE SPEED IN MPH

SIGN FACE DETAILS

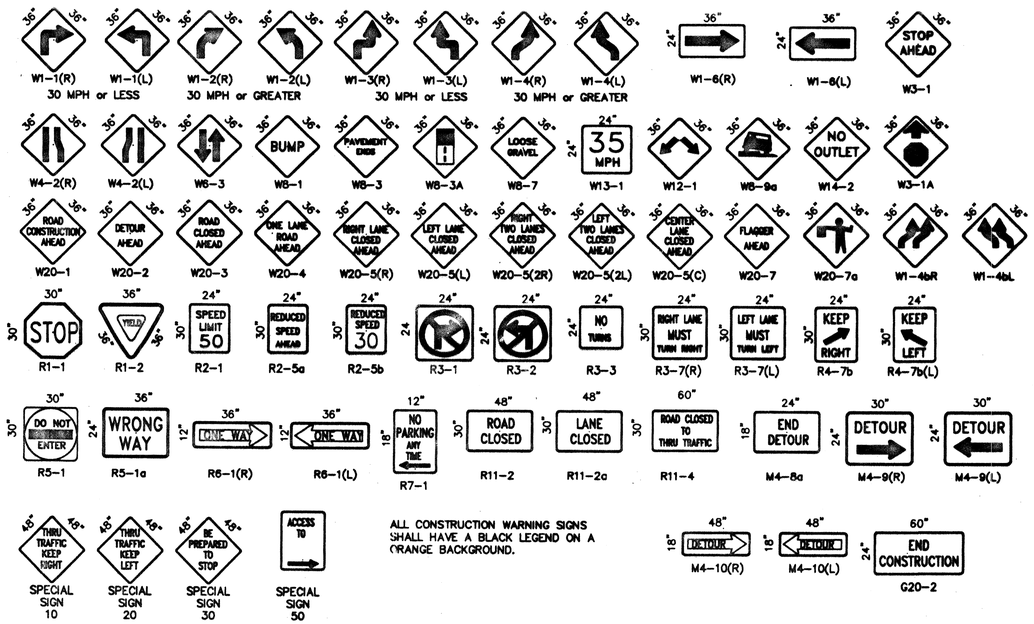

ALL CONSTRUCTION WARNING SIGNS SHALL HAVE A BLACK LEGEND ON A ORANGE BACKGROUND.

NO.	DATE	REMARKS	BY
4	9/25/91	ADD NOTE NO. 27	J.D.L.
3	9/24/91	REVISED NOTE NO. 26	J.D.L.
2	9/24/91	REVISED NOTE NO. 19	J.D.L.
1	9/24/91	REVISED NOTE NO. 11	J.D.L.

REVISIONS

DESIGN — DESIGNED BY — DATE
DRAWN BY — C.O.A. STANDARDS — DATE
CHECKED BY — DATE

AS BUILT INFORMATION — CONTRACTOR — DATE
SURVEY INFORMATION — FIELD NOTES — NO. — BY — DATE
BENCH MARKS
ENGINEER'S SEAL
MICRO-FILM INFORMATION — RECORDED BY — DATE

CITY OF ALBUQUERQUE
PUBLIC WORKS DEPARTMENT
ENGINEERING DEVELOPMENT GROUP

TITLE: **SIGNING AND CONSTRUCTION TRAFFIC CONTROL STANDARDS**

DESIGN REVIEW COMMITEE — CITY ENGINEER APPROVAL — LAST UPDATE — MO./DAY/YR. — MO./DAY/YR.

COA Standard

PROJECT NO. 613081 — MAP NO. — SHEET 4 OF 5

CTCSTN01.DWG

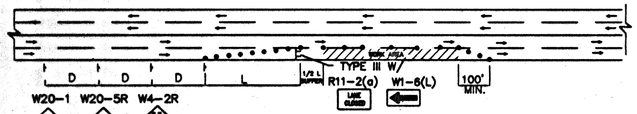

TYPICAL RIGHT LANE CLOSURE

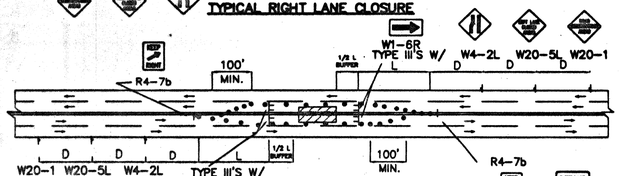

TYPICAL LEFT LANE CLOSURE

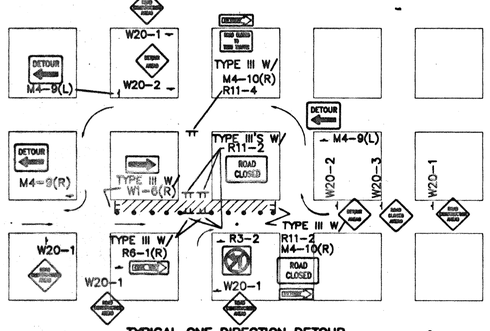

TYPICAL ONE DIRECTION DETOUR

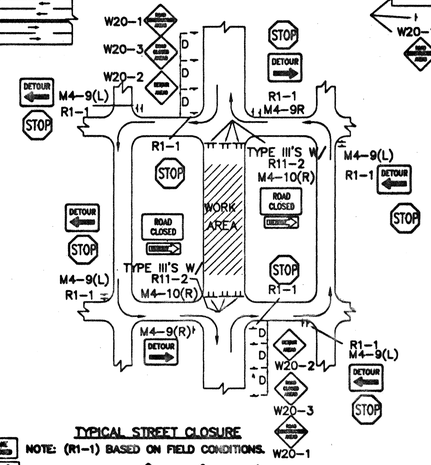

TYPICAL STREET CLOSURE

NOTE: (R1-1) BASED ON FIELD CONDITIONS.

NOTE:
MAY REQUIRE LEFT LANE CLOSURE DEPENDING ON FIELD CONDITIONS.

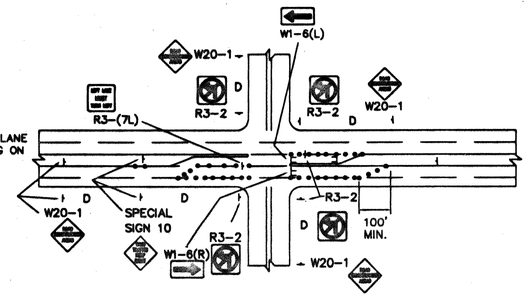

TYPICAL LANE CLOSURE AT INTERSECTION

NOTE: DEPENDING ON WORK ZONE LOCATION

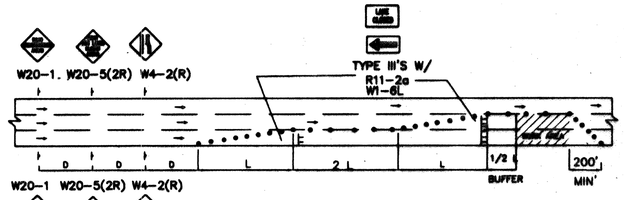

TYPICAL DOUBLE RIGHT LANE CLOSURE

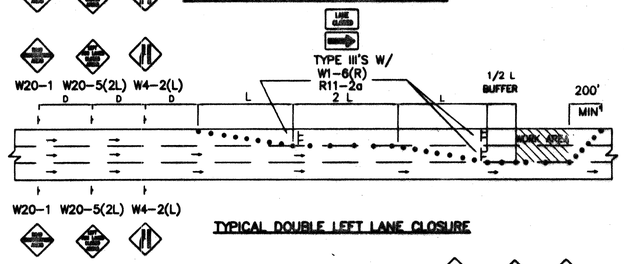

TYPICAL DOUBLE LEFT LANE CLOSURE

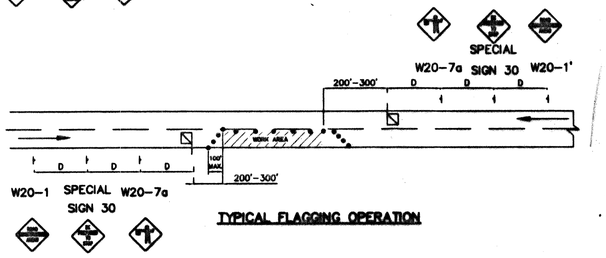

TYPICAL FLAGGING OPERATION

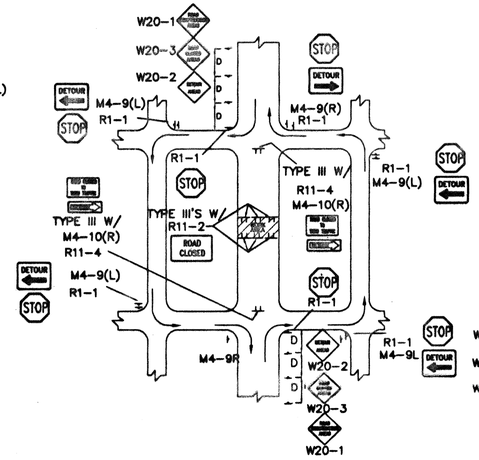

TYPICAL MID-BLOCK CLOSURE

NOTE: (R1-1) BASED ON FIELD CONDITIONS.

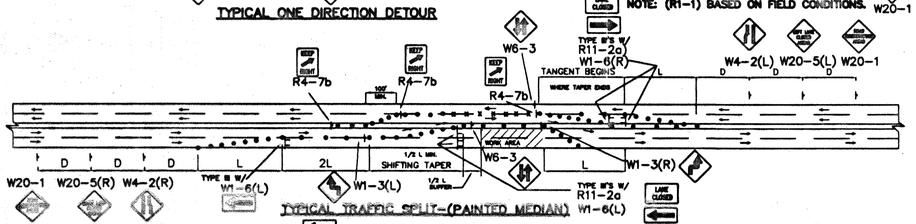

TYPICAL TRAFFIC SPLIT-(PAINTED MEDIAN)

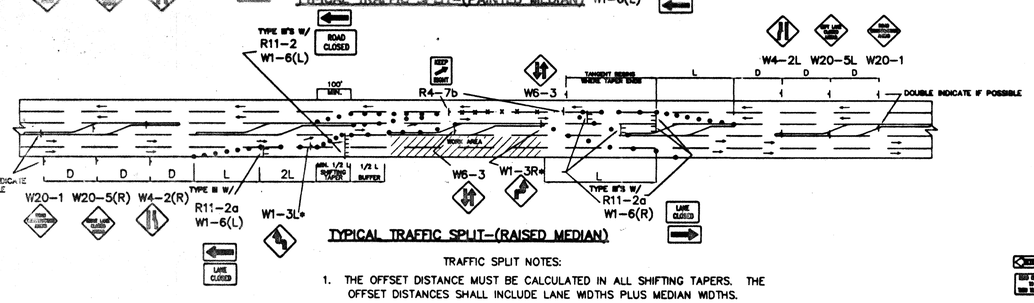

TYPICAL TRAFFIC SPLIT-(RAISED MEDIAN)

TRAFFIC SPLIT NOTES:

1. THE OFFSET DISTANCE MUST BE CALCULATED IN ALL SHIFTING TAPERS. THE OFFSET DISTANCES SHALL INCLUDE LANE WIDTHS PLUS MEDIAN WIDTHS.
2. 1/2 L IS MINIMUM DISTANCE FOR SHIFTING TAPERS.
3. REVERSE CURVES MAY BE IMPLEMENTED. ALL CURVE DATA SHALL BE CALCULATED.
4. MEDIAN REMOVAL SHALL BE REQUIRED IF 1/2 L OR REVERSE CURVE IS NOT SUFFICIENT. MEDIAN REMOVAL SHALL TAKE PLACE BEFORE SPLITS.
5. REDUCED SPEED MAY BE CONSIDERED.
6. * USE W1-3 FOR 30 MPH OR LESS, W1-4 FOR SPEED 35 MPH OR GREATER.

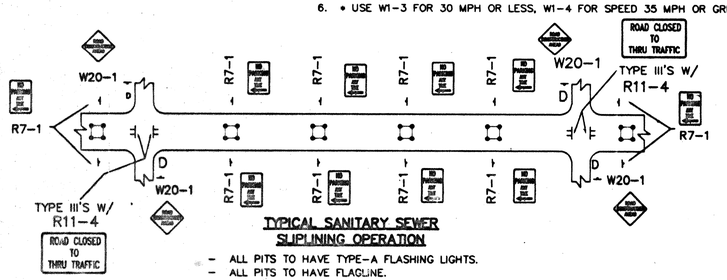

TYPICAL SANITARY SEWER SLIPLINING OPERATION

- ALL PITS TO HAVE TYPE-A FLASHING LIGHTS.
- ALL PITS TO HAVE FLAGLINE.

GENERAL NOTE:

ALL CONSTRUCTION WARNING SIGNS SHALL HAVE A BLACK LEGEND ON A ORANGE BACKGROUND.

ALL ADVANCE WARNING SIGNS SHALL BE A MINIMUM OF 36" THIRTY SIX INCHES BY 36" THIRTY SIX INCHES IN SIZE AND SHALL HAVE ONE WARNING LIGHT. ⚠

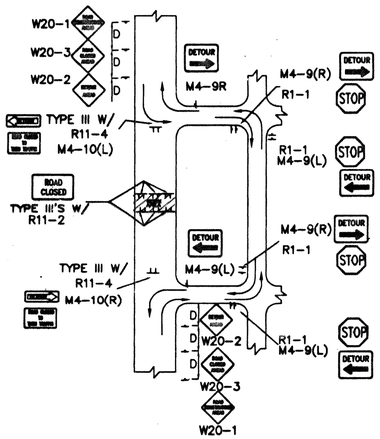

TYPICAL STREET CLOSURE

NOTE: (R1-1) BASED ON FIELD CONDITIONS.

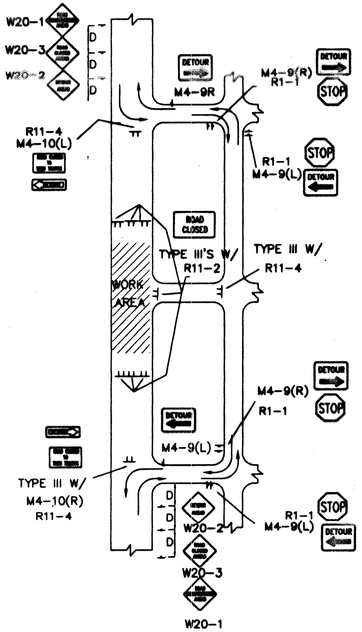

TYPICAL STREET CLOSURE

NOTE: (R1-1) BASED ON FIELD CONDITIONS.

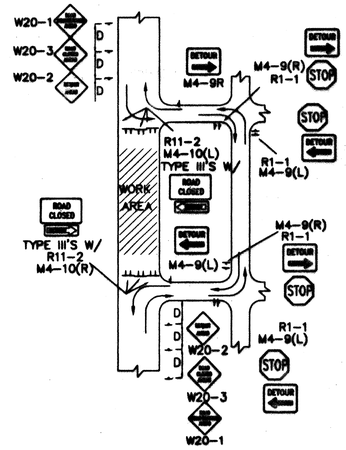

TYPICAL STREET CLOSURE

NOTE: (R1-1) BASED ON FIELD CONDITIONS.

FOR INFORMATION ONLY

AS BUILT INFORMATION
CONTRACTOR
WORK STAKED BY
INSPECTOR'S
FIELD VERIFICATION BY
DRAWINGS CORRECTED BY
MICRO-FILM INFORMATION
RECORDED BY
DATE
NO.

BENCH MARKS

SURVEY INFORMATION
FIELD NOTES
NO. BY DATE

ENGINEER'S SEAL

NO.	DATE	REMARKS	BY
1	9/2/99	REVISED GENERAL NOTE	J.D.L.

REVISIONS

DESIGN
DESIGNED BY C.O.A. STANDARDS DATE
DRAWN BY DATE
CHECKED BY DATE

CITY OF ALBUQUERQUE
PUBLIC WORKS DEPARTMENT
ENGINEERING DEVELOPMENT GROUP

TITLE: **TYPICAL TRAFFIC CONTROL & SIGNING EXAMPLES (REF. M.U.T.C.D.)**

DESIGN REVIEW COMMITTEE | CITY ENGINEER APPROVAL | LAST UPDATE | MO./DAY/YR. | MO./DAY/YR.

COA Standard

PROJECT NO. 613081 | MAP NO. | SHEET 5 OF 3