FILENET FORM FOR RECORD CENTER

SECURITY	☒ RESTRICTED OR ☐ UNRESTRICTED
PROJECT #	6258.92
PROJECT TITLE	Domingo Baca Arroyo Phase II North Diversion Channel to Washington St.
ATLAS ZONE	C-17
DATE OF MAP & RECORD STAMP	08/19/05
SERIES	26
NUMBER OF SHEETS	14

CITY OF ALBUQUERQUE
PUBLIC WORKS DEPARTMENT
PLANS FOR CONSTRUCTION

DOMINGO BACA ARROYO
PHASE II
NORTH DIVERSION CHANNEL TO WASHINGTON STREET

RECORD DRAWINGS

I, Patrick J. Conley of the firm of Smith Engineering Company, A Registered Professional Engineer in the State of New Mexico, do hereby state, to the best of my knowledge and belief, that the infrastructure installed as part of this project has been inspected by a qualified person under my direct supervision and has been constructed in general accordance with the plans and specifications, while someone from Smith Engineering Company was onsite, approved by the City Engineer and that the original design intent of the approved plans has been met, except as noted on the as-built construction drawings. The Certification is based on site inspections by me or personnel under my direction, and as-built survey information provided by BSN *(Surveyor Name)* NMPS

PATRICK J. CONLEY NEW MEXICO 10141 REGISTERED PROFESSIONAL ENGINEER

8/19/05

VICINITY MAP

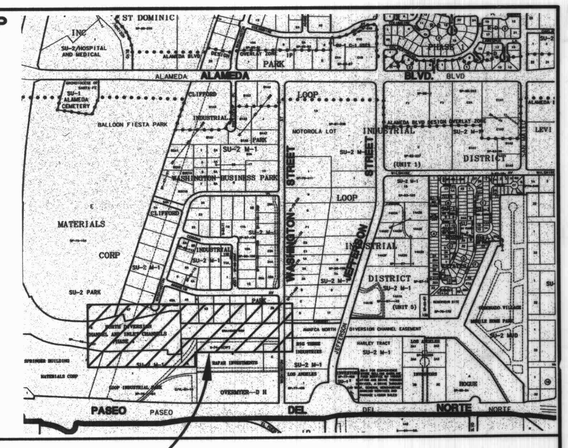

N

MAP NO. C-17-Z

PROJECT LOCATION

INDEX TO DRAWINGS

APPROVAL OF RECORD DRAWINGS
CHIEF CONSTRUCTION ENGINEER
DATE 08/19/05

DISCLOSURE STATEMENT:

THE SUBJECT PROPERTY IS LOCATED ON/NEAR A FORMER LANDFILL. DUE TO SUBJECT PROPERTY BEING ON/NEAR A FORMER LANDFILL, CERTAIN PRECAUTIONARY MEASURES MAY NEED TO BE TAKEN TO ENSURE THE HEALTH AND SAFETY OF THE PUBLIC. RECOMMENDATIONS MADE BY A PROFESSIONAL ENGINEER WITH EXPERTISE IN LANDFILLS AND LANDFILL GAS ISSUES (AS REQUIRED BY THE MOST CURRENT VERSION OF THE "INTERIM GUIDELINES FOR DEVELOPMENT WITHIN 1000 FEET OF LANDFILLS") SHALL BE CONSULTED PRIOR TO DEVELOPMENT OF THE SITE.

APPROVED FOR CONSTRUCTION

Marcia Pincus — July 7, 2004
MARCIA PINCUS, P.E. — DATE
ENVIRONMENTAL HEALTH DEPARTMENT
CITY OF ALBUQUERQUE

APPROVED FOR CONSTRUCTION WITHIN AMAFCA R.O.W.

John P Kelley — 7-7-04
JOHN KELLEY, P.E. — DATE
EXECUTIVE ENGINEER
ALBUQUERQUE METROPOLITAN ARROYO FLOOD CONTROL AUTHORITY

UTILITY COMPANY CONTACTS

PNM-ELECTRIC
~~JAMES VANN~~ Mark Bouchard
Principal Engineer
4201 Edith Blvd., NE
Albuquerque, New Mexico 87107
(505) 241-~~3490~~ 02

AT&T
DAVID CROWEL
Resource Supervisor
111 Third ST., NW
Albuquerque, New Mexico 87103
(505) 842-2911

QWEST/US WEST
DAVID MULLER
Capacity Provisioning Specialist
(505) 245-8706
201 3rd Street NW, Suite 700
Albuquerque, New Mexico 87102

E-SPIRE (ACSI)
JOHN MARES
505 Marquette NE, Suite 1605
Albuquerque, New Mexico 87102
(505) 998-2274

BROOKS/MCI WORLDCOM
ANDY DARNELL
Operation Manager
3700 Singer Blvd. NE, Suite A
Albuquerque, NM 87109
(505) 346-44~~76~~ 70

TIME WARNER TELECOM
ROYAL HARRISON
Plant Manager
3830 Singer Blvd. NE, Suite 1000
Albuquerque, NM 87109
(505) 938-7339

PNM-GAS CO.
JEFFERY ROMANOWSKI, PE
Project Leader
4625 Edith Blvd., NE
Albuquerque, New Mexico 87107
(505) 241-7752

COMCAST CABLE
RITA ERICKSON
Planning and Design Supervisor
4611 Montbel Pl., NE
Albuquerque, New Mexico 87107
(505) 761-6235

CITY OF ALBUQUERQUE (WATER & SEWER)
GREG OLSON
PWD/Utility Development
P.O. Box 1293
Albuquerque, New Mexico 87103
(505) 768-2719

McLeodUSA
RICK MUELLER
Supervisor of Outside Techs.
505 Marquette NE, Suite 1600
Albuquerque, New Mexico 87102
(505) 244-3161

PATHNET
LOIS MEEKS
Right-of-Way & Licensing
1661 Gateway Blvd.
Richardson, Texas 75080
(972) 944-7114

GENUITY
DENNIS PAULSON
Manager
OSP Engineering
5221 North O'Connor MC: HQLIIA22
Irving, Texas 75039
(972) 791-3277

CALL BEFORE YOU DIG!
STATEWIDE
1-800-321-ALERT
ALBUQUERQUE
260-1990

SEC JOB # 100101B
Smith Engineering Company
A Full Service Engineering Company
6200 Uptown Boulevard, N.E. Suite 2000 Albuquerque, New Mexico 87110

REV.	SHEETS	CITY ENGINEER	DATE	USER DEPARTMENT	DATE	USER DEPARTMENT	DATE

ENGINEERS STAMP & SIGNATURE

PATRICK J. CONLEY NEW MEXICO 10141 REGISTERED PROFESSIONAL ENGINEER

7/6/04

APPROVED	ENGINEER	DATE
DRC Chairman		7-8-04
Transportation		7-7-04
Water/Wastewater	William J. Malich	7-7-04
Hydrology	John P. Kelley	7-7-04
Constr. Coord.		7-8-04
Env. Health		
AMAFCA		

PROJECT NUMBER **6258.92**

CITY ENGINEER — DATE 7-08-04

SHEET 1 OF 14

1 THE SPECIFICATIONS USED FOR THIS PROJECT ARE THE CITY OF ALBUQUERQUE STANDARD SPECIFICATIONS FOR PUBLIC WORKS CONSTRUCTION, 1986 EDITION, UPDATE, THROUGH UPDATE NO.7.

2 FIVE (5) WORKING DAYS PRIOR TO BEGINNING CONSTRUCTION, THE CONTRACTOR WILL SUBMIT A DETAILED CONSTRUCTION SCHEDULE TO THE CITY CONSTRUCTION COORDINATION DIVISION. TWO (2) DAYS PRIOR TO CONSTRUCTION, THE CONTRACTOR WILL OBTAIN A BARRICADING PERMIT FROM THE CONSTRUCTION COORDINATION DIVISION. CONTRACTOR SHALL NOTIFY BARRICADE ENGINEER (924-3400) PRIOR TO OCCUPYING AN INTERSECTION. REFER TO SECTION 19 OF STANDARD SPECIFICATIONS FOR PUBLIC WORKS.

3 THE CONTRACTOR WILL NOTIFY THE FIELD ENGINEER NOT LESS THAN SEVEN (7) DAYS PRIOR TO STARTING WORK, IN ORDER THAT THE CITY SURVEYOR MAY TAKE NECESSARY MEASURES TO INSURE THE PRESERVATION OF SURVEY MONUMENTS. THE CONTRACTOR WILL NOTIFY THE ENGINEER IF A MONUMENT IS DISTURBED. REPLACEMENT WILL BE DONE ONLY BY THE CITY SURVEY SECTION. WHEN A CHANGE IS MADE IN THE FINISHED ELEVATION OF THE PAVEMENT OF ANY ROADWAY IN WHICH A PERMANENT SURVEY MONUMENT IS LOCATED, CONTRACTOR WILL, AT HIS OWN EXPENSE, ADJUST THE MONUMENT COVER TO THE NEW GRADE UNLESS OTHERWISE SPECIFIED. REFER TO SECTION 4 OF STANDARD SPECIFICATIONS FOR PUBLIC WORKS.

4 ALL NEW MANHOLES SHALL BE TYPE "E" (COA DWG. 2102) UNLESS OTHERWISE NOTED ON THE PLANS.

5 THE CONTRACTOR WILL BE RESPONSIBLE FOR DISPOSING OF ALL DEBRIS, INCLUDING, BUT NOT LIMITED TO HAZARDOUS WASTE AT DISPOSAL SITES APPROVED BY GOVERNMENTAL AGENCIES REGULATING THE DISPOSAL OF SUCH MATERIALS.

6 ALL WATER VALVE BOXES AND MANHOLES IN THE STREET CONSTRUCTION ARE TO BE ADJUSTED TO FINISH GRADE AND WILL BE MEASURED AND PAID PER EACH.

7 SUBGRADE PREPARATION UNDER SIDEWALKS AND DRIVE PADS, AND SUBGRADE AND SUBBASE PREPARATION UNDER CURB AND GUTTER IS CONSIDERED INCIDENTAL TO THE CONSTRUCTION OF SUCH, AND NO DIRECT PAYMENT SHALL BE MADE FOR THOSE ITEMS OF WORK.

8 THE WATER SYSTEMS DIVISION (857-8200) WILL BE NOTIFIED BY THE CONTRACTOR SEVEN (7) WORKING DAYS IN ADVANCE OF ANY WORK WHICH MAY AFFECT THE EXISTING PUBLIC WATER FACILITIES. REFER TO SECTION 18 OF STANDARD SPECIFICATIONS.

9 ALL EXCAVATION WILL BE GOVERNED BY FEDERAL, STATE AND LOCAL LAWS, RULES, AND REGULATIONS CONCERNING CONSTRUCTION SAFETY AND HEALTH. ALL EXCAVATING, TRENCHING & SHORING ACTIVITIES MUST BE CARRIED-OUT IN ACCORDANCE WITH OSHA 1926.650 SUBPART P.

10 ALL SIGNS AND CODING WILL BE IN ACCORDANCE WITH THE "MANUAL OF UNIFORM TRAFFIC CONTROL DEVICES FOR STREETS AND HIGHWAYS" CURRENT EDITION PUBLISHED BY THE U.S. DEPARTMENT OF TRANSPORTATION.

11 THE CONTRACTOR IS TO EXERCISE CARE TO AVOID DISTURBING ANY EXISTING UNDERGROUND UTILITIES. IT WILL BE HIS OF HER RESPONSIBILITY TO COORDINATE WITH THE UTILITY COMPANIES IN ORDER TO PREVENT ANY SERVICE DISRUPTION. SEE SECTION 18 "UTILITIES", CITY OF ALBUQUERQUE, STANDARD SPECIFICATIONS FOR CONTRACTOR REQUIREMENTS.

12 WHEN ABUTTING NEW PAVEMENT TO EXISTING INTERSECTING STREETS, SAW CUT EXISTING PAVEMENT TO A STRAIGHT LINE AND AT RIGHT ANGLES AND REMOVE ANY BROKEN OR CRACKED PAVEMENT. NO DIRECT PAYMENT WILL BE MADE FOR SAW CUTTING.

13 ALL GAS VALVES, GAS MANHOLES, ELECTRICAL MANHOLES, TELEPHONE MANHOLES, AND UTILITY POLES WILL BE ADJUSTED TO GRADE BY EACH UTILITY COMPANY. CONTRACTOR WILL COORDINATE THROUGH CITY UTILITY COORDINATOR.

14 WHEN REMOVAL OF EXISTING CURB AND GUTTER OR SIDEWALK IS REQUIRED, REMOVE BACK TO NEAREST SUITABLE JOINT UNLESS OTHERWISE DIRECTED BY THE CITY FIELD ENGINEER.

15 THE CONTRACTOR WILL NOTIFY NEW MEXICO ONE CALL SYSTEM 260-1990 TWO (2) WORKING DAYS PRIOR TO COMMENCING WORK IN NEW AREAS.

16 CONTRACTOR WILL MAKE ALL WATER VALVES AND MANHOLES ACCESSIBLE TO THE CITY AT ALL TIMES.

17 CONTRACTOR WILL PLACE BITUMINOUS MATERIAL WITH THE USE OF A LAYDOWN MACHINE WHERE PAVEMENT IS 8 FEET IN WIDTH OR WIDER.

18 ALL SUBGRADE AND SUBBASE MATERIAL ENCOUNTERED IN PAVEMENT REMOVAL AND REPLACEMENT THAT IS DETERMINED BY THE FIELD ENGINEER TO MEET THE SPECIFICATIONS, CAN BE REUSED. HOWEVER, THE MATERIAL WILL BE PROCESSED AND COMPACTED TO MEET MOISTURE CONTENT AND PERCENT COMPACTION REQUIRED BY THE SPECIFICATIONS.

19 CONTRACTOR WILL NOT PAVE OVER ANY SURFACE FEATURE, I.E., GAS VALVE, MANHOLE COVER, ETC. WITHOUT PRIOR APPROVAL FROM THE CITY FIELD ENGINEER.

20 CONTRACTOR WILL CONFINE HIS OR HER WORK WITHIN THE CONSTRUCTION EASEMENT LIMITS AND/OR RIGHT-OF-WAY, OR PROVIDE COPIES OF AGREEMENTS WITH ADJACENT LANDOWNERS TO THE CITY OF ALBUQUERQUE.

21 ALL WATER VALVES AND FIRE HYDRANTS REMOVED WILL BE SALVAGED AND RETURNED TO THE C.O.A.

22 MINIMUM BOTTOM WIDTH OF TRENCHES FOR RIGID PIPE SHALL BE EQUAL TO THE OUTSIDE DIAMETER PLUS 16 INCHES. BEDDING MATERIAL SHALL BE CLASS II, III, OR IV UNLESS OTHERWISE SPECIFICALLY NOTED ON THE PLANS.

23 MINIMUM BOTTOM WIDTH OF TRENCHES FOR NON-RIGID PIPE SHALL BE EQUAL TO THE OUTSIDE DIAMETER PLUS 12 INCHES. BEDDING MATERIAL SHALL BE CLASS I, II, OR III.

24 THE CONTRACTOR AGREES TO TAKE NECESSARY SAFETY PRECAUTIONS AS REQUIRED BY FEDERAL, STATE AND LOCAL AUTHORITIES TO PROTECT PEDESTRIAN AND VEHICULAR TRAFFIC IN THE CONSTRUCTION AREA, WHICH INCLUDE BUT ARE NOT LIMITED TO: MAINTAINING ADEQUATE WARNING SIGNS, BARRICADES, LIGHTS, GUARD FENCES, WALKS AND BRIDGES.

25 ALL STRUCTURAL CONCRETE TO BE 4000 PSI UNLESS OTHERWISE NOTED ON PLANS.

26 ALL REINFORCING STEEL TO BE GRADE 60.

27 ALL EXPOSED EDGES ON CAST-IN-PLACE CONCRETE STRUCTURES WILL HAVE A 1" CHAMFER UNLESS OTHERWISE NOTED.

28 ALL SPLICES IN REINFORCING STEEL WILL BE 2-FOOT 6-INCH MINIMUM UNLESS OTHERWISE NOTED.

29 PRIOR TO CONSTRUCTION, THE CONTRACTOR WILL EXCAVATE AND VERIFY THE HORIZONTAL AND VERTICAL LOCATIONS OF ALL POTENTIAL CONFLICTING UTILITIES. SHOULD A CONFLICT EXIST BETWEEN THE FIELD INFORMATION AND THE PLANS, THE CONTRACTOR WILL NOTIFY THE CITY FIELD ENGINEER SO THE CONFLICT CAN BE RESOLVED WITH MINIMUM AMOUNT OF DELAY.

30 THE REPLACEMENT OF THE EXISTING UTILITIES AND THE INSTALLATION OF NEW UTILITY LINES WILL BE COMPLETED IN ADVANCE OF STARTING THE PAVEMENT WORK. TEMPORARY PAVEMENT WILL BE PLACED IN ALL TRENCHES REQUIRED FOR THE UTILITY REPLACEMENTS IN THOSE AREAS THAT MUST MAINTAIN TRAFFIC UNTIL THE FINAL PAVEMENT WORK STARTS IN EACH AREA. TEMPORARY STRIPING SHALL BE THE CONTRACTOR'S RESPONSIBILITY. MAINTENANCE OF THE TEMPORARY PAVING AND STRIPING WILL BE AT THE CONTRACTOR'S EXPENSE.

31 TACK COAT FOR SURFACE COURSE REQUIREMENTS WILL BE DETERMINED BY THE FIELD ENGINEER.

32 THE CONTRACTOR WILL CONTACT THE CITY OF ALBUQUERQUE TRAFFIC DIVISION 764-1599, ONE (1) WEEK IN ADVANCE OF ANY CHANGES REQUIRED IN THE TRAFFIC SIGNALIZATION OF THIS PROJECT. ALL WORK ASSOCIATED WITH NEW TRAFFIC SIGNALIZATION SHALL BE THE RESPONSIBILITY OF THE CONTRACTOR.

33 ALL NEW STREET PAVING, DRIVEWAYS, SIDEWALKS, AND CURB AND GUTTERS, ABUTTING EXISTING AREAS SHALL MATCH THE ELEVATION OF THOSE AREAS.

34 PERMANENT PAVEMENT STRIPING AND MARKINGS WILL BE PLACED BY THE CONTRACTOR. ROAD SHALL NOT BE OPENED TO TRAFFIC UNTIL IT IS STRIPED. ALL STRIPING, PAVEMENT MARKINGS INCLUDING CROSSWALKS, ARROWS AND LINE MARKINGS ARE TO BE CONSTRUCTED OF HOT PLASTIC OR COLD PLASTIC IN ACCORDANCE WITH THE MANUAL OF UNIFORM TRAFFIC CONTROL DEVICES.

35 ALL EXCAVATED MATERIAL THAT IS NOT REQUIRED TO BE REUSED MUST BE REMOVED FROM THE PROJECT AREA WITHIN FOUR DAYS OF EXCAVATION. SPOIL PILES WILL BE ALLOWED ONLY AS DIRECTED BY THE CITY FIELD ENGINEER.

36 THE CONTRACTOR WILL COORDINATE THE CONSTRUCTION ACTIVITIES WITH ALL OTHER CONTRACTORS AND UTILITY COMPANIES WORKING IN THE SAME AREA. THE CONTRACTOR MAY BE REQUIRED TO RESCHEDULE THEIR ACTIVITIES TO ALLOW UTILITY CREWS TO PERFORM THEIR REQUIRED WORK. NO ADDITIONAL COMPENSATION WILL BE ALLOWED FOR DELAYS OR INCONVENIENCE CAUSED BY UTILITY COMPANY WORK CREWS. THE CONTRACTOR MAY BE ALLOWED AN EXTENSION OF THE CONTRACT TIME, DUE TO DELAYS, AS DELINEATED IN THE CITY OF ALBUQUERQUE STANDARD SPECIFICATIONS, SECTION 12.

37 ALL CONSTRUCTION EASEMENTS ON PRIVATE PROPERTY WILL BE OBTAINED BY THE CONTRACTOR PRIOR TO THE BEGINNING OF CONSTRUCTION.

38 EXISTING MEDIAN CURB AND GUTTER AND STANDARD CURB AND GUTTER, NOT DISTURBED BY CONTRACTOR, BUT OUT OF ALIGNMENT, DISPLACED VERTICALLY, BADLY BROKEN AND/OR DETERIORATED, WILL BE REPLACED AS DIRECTED BY THE FIELD ENGINEER AND PAID FOR AT CONTRACT UNIT PRICES.

39 ALL TRAFFIC CONTROL DEVICES REQUIRED FOR DRIVEWAY CLOSURES, UTILITY CONSTRUCTION OR FOR OTHER REASONS AND NOT SHOWN ON THE SIGNING PLANS WILL BE FURNISHED BY THE CONTRACTOR AND WILL BE PAID AS SPECIFIED IN THE TECHNICAL SPECIFICATIONS AND BID PROPOSAL. PRIOR TO PLACING THE TRAFFIC CONTROL DEVICES, THE CONTRACTOR WILL NOTIFY THE AFFECTED OWNERS IN ACCORDANCE WITH THE SPECIFICATIONS. CONTRACTOR MUST MAKE PROVISIONS TO PROVIDE ACCESS TO PROPERTIES. REFER TO SECTION 19 OF THE STANDARD SPECIFICATIONS.

40 ALL UTILITY LINES WHICH ARE NOT SPECIFICALLY DESIGNATED TO BE REMOVED AND REPLACED ON THE PLANS, WILL BE MAINTAINED IN SERVICE. SHORING, SHEETING AND OTHER MEANS OF SUPPORT SHALL BE EMPLOYED BY THE CONTRACTOR TO PREVENT DAMAGE OR LOSS OF THESE EXISTING UTILITIES. BEAM AND CABLE OR OTHER ADEQUATE SUPPORTS WILL BE USED FOR TEMPORARY SUPPORT OF ALL UTILITY LINES WHICH CROSS THE TRENCH. ANY DAMAGE TO EXISTING UTILITIES WILL PROMPTLY BE REPAIRED AT THE CONTRACTOR'S EXPENSE. THE CONTRACTOR WILL NOTIFY THE ENGINEER IMMEDIATELY OF ANY SIGNIFICANT DEVIATION OF EXPOSED UTILITIES FROM THE LOCATIONS SHOWN ON THE PLANS SO THAT CONFLICTS CAN BE RESOLVED IN A TIMELY MANNER.

41 THE CONTRACTOR WILL ASSUME RESPONSIBILITY FOR ANY DAMAGE TO EXISTING COA INFRASTRUCTURE (C & G, PAVING, ETC.) DURING CONSTRUCTION, APART FROM THOSE SECTIONS INDICATED FOR REMOVAL ON THE PLANS, AND WILL REPAIR OR REPLACE SAME AT HIS OR HER OWN EXPENSE. HE/SHE WILL SUITABLY PROTECT THE CURB AND GUTTER FROM INCIDENTAL SPLASHING DURING THE TACK COAT APPLICATION AND WILL BE RESPONSIBLE FOR CLEANING SAME AT HIS OWN COST SHOULD SPLASHING OCCUR.

42 ALL INTERFERING PORTIONS OF ABANDONED UTILITY LINES WHICH ARE EXPOSED AS A RESULT OF CONSTRUCTION WILL BE REMOVED AND DISPOSED OF BY THE CONTRACTOR.

43 STATIONS OF STORM DRAIN INLETS ARE TO THE CENTER OF GRATE. ALL STORM DRAIN INLETS WILL BE TYPE "A" UNLESS OTHERWISE NOTED ON THE PLANS.

44 SHORING COSTS WILL BE CONSIDERED INCIDENTAL TO THE TRENCH AND BACKFILL COSTS.

45 THE CONTRACTOR WILL BE RESPONSIBLE FOR SECURING NPDES PERMITS REQUIRED BY APPLICABLE CITY, STATE, AND FEDERAL REGULATIONS.

46 ALL STORM DRAIN AND CONNECTOR PIPE WILL BE CLASS IV REINFORCED CONCRETE PIPE UNLESS OTHERWISE NOTED ON THE PLANS.

47 THE TERM "REMOVE" USED IN THIS PLAN SET INCLUDES THE DISPOSAL OF SAID MATERIAL IN ACCORDANCE WITH CITY OF ALBUQUERQUE STANDARD SPECIFICATIONS, LATEST EDITION.

48 CONTRACTOR WILL SURVEY AND LOG EXISTING ELEVATIONS OF CURB-AND-GUTTER, SIDEWALK, AND PAVEMENT WHICH WILL BE REMOVED FOR CONSTRUCTION OF IMPROVEMENTS. CONTRACTOR WILL REPLACE REMOVED CURB-AND-GUTTER, SIDEWALK, DRIVE PADS, AND PAVEMENT TO ELEVATIONS PRIOR TO REMOVAL UNLESS OTHERWISE INDICATED ON THE PLANS.

49 CONTRACTOR WILL CONSTRUCT TEMPORARY ASPHALT PAVEMENT AS DIRECTED BY THE COA ENGINEER TO PROVIDE ACCESS TO LOCAL BUSINESS, ETC. TEMPORARY PAVEMENT SHALL BE REMOVED AND DISPOSED OF PRIOR TO PLACEMENT OF FULL WIDTH PAVEMENT SECTION. TEMPORARY PAVING SHALL BE PER COA STD. DWG. 2415 AND PAID FOR PER COA STD. SPECIFICATIONS.

50 ALL EXPOSED CONCRETE SURFACES INCLUDING BUT NOT LIMITED TO RETAINING WALLS, SLOPE PAVING, STRUCTURES, AND CHANNEL LINING SHALL BE TINTED CONCRETE. TINTING SHALL BE SAN DIEGO BUFF AT ONE POUND OF COLOR PER SACK OF CEMENT. THE EXCEPTION IS THE ENTRY FLATWORK ADJACENT TO WASHINGTON.

51 PRE-WETTING OF THE EMBANKMENT FOUNDATION AND KEY TRENCH SHALL BE CONSIDERED INCIDENTAL TO THE CONSTRUCTION OF THE EMBANKMENT. NO ADDITIONAL PAYMENT WILL BE MADE FOR THIS WORK.

52 ALL ASPHALTIC CONCRETE SHALL BE MINIMUM 1800 LB. STABILITY AND COMPACTED TO 95% MODIFIED MARSHALL DENSITY UNLESS OTHERWISE NOTED ON THE PLANS.

53 ALL RIP-RAP MATERIAL USED ON THIS PROJECT SHALL BE A NATURAL ROCK MATERIAL CONFORMING TO THE SIZE AND MATERIAL PROPERTY REQUIREMENTS SET FORTH IN THE COA STANDARD SPECIFICATIONS. NO BROKEN CONCRETE OR RUBBLE WILL BE ACCEPTED.

54 CONTRACTOR SHALL MAINTAIN A GRAFFITI-FREE SITE. CONTRACTOR SHALL PROMPTLY REMOVE ANY AND ALL GRAFFITI FROM EQUIPMENT, WHETHER PERMANENT OR TEMPORARY.

55 ALL STRIPING ON C.O.A STREETS REMOVED OR DAMAGED MUST BE REPLACED WITH PLASTIC. STRIPING ERADICATION SHALL BE ACCOMPLISHED BY WATER BLASTING OR SURFACE PLANING OF THE ROADWAY TO A MAXIMUM DEPTH OF 0.25 INCHES (MAXIMUM) AND FOR A WIDTH EQUAL TO TWO TIMES THE WIDTH OF THE STRIPE OR MARKING TO BE REMOVED.

56 FOR STORM DRAIN CONSTRUCTION, RCP JOINTS SHALL NOT BE GROUTED PRIOR TO FINAL. FINAL INSPECTION WILL DETERMINED JOINTS TO BE GROUTED FOR FULL INSPECTION ACCEPTANCE OF THE CONSTRUCTION.

57 THE CONTRACTOR SHALL ABIDE BY ALL LOCAL, STATE, AND FEDERAL LAWS, RULES, AND REGULATIONS WHICH APPLY TO THE CONSTRUCTION, INCLUDING WORKER HEALTH AND SAFETY ASPECTS, OF THESE IMPROVEMENTS.

58 DISPOSAL SITE FOR ALL EXCESS EXCAVATION MATERIAL AND UNSUITABLE MATERIAL SHALL BE OBTAINED BY THE CONTRACTOR IN COMPLIANCE WITH APPLICABLE ENVIRONMENTAL REGULATIONS. ALL COSTS INCURRED IN OBTAINING A FULLY REGULATED DISPOSAL SITE AND HAUL THERETO SHALL BE CONSIDERED INCIDENTAL TO THE PROJECT AND NO SEPARATE MEASUREMENT OF PAYMENT SHALL BE CONSIDERED.

HEALTH AND SAFETY NOTE::

THIS PROJECT IS BEING PERFORMED ON/NEAR A FORMER LANDFILL. THE CONTRACTOR IS RESPONSIBLE FOR THE HEALTH AND SAFETY OF HIS/HER WORKERS. THE WORK DETAILED IN THIS PROJECT MAY REQUIRE THAT A HEALTH AND SAFETY PLAN BE PREPARED ACCORDING TO OSHA 1910.120.

EXISTING FEATURES LEGEND:

- EXISTING CHAIN-LINK FENCE
- 2" HPG GV — EXISTING GAS LINE W/ VALVE
- 6" W WV — EXISTING WATERLINE W/ VALVE
- EXISTING WATERLINE METER
- EXISTING FIRE HYDRANT
- 6" SAS — EXISTING SANITARY SEWER LINE W/ MANHOLE
- 36" RCP — EXISTING STORM DRAIN
- EXISTING UTILITY POLE
- 44 — EXISTING 1' CONTOUR
- 4945 — EXISTING 5' CONTOUR
- EXISTING CURB & GUTTER
- EXISTING CONCRETE
- EXISTING BUILDING LINE
- EXISTING EASEMENT LINE

NEW FEATURES LEGEND:

- CONSTRUCTION CENTERLINE
- NEW CHAIN-LINK FENCE
- 2" HPG GV — NEW GAS LINE W/ VALVE
- 6" W WV — NEW WATERLINE W/ VALVE
- NEW WATERLINE METER
- NEW FIRE HYDRANT
- 6" SAS — NEW SANITARY SEWER LINE W/ MANHOLE
- 36" RCP — NEW STORM DRAIN
- NEW UTILITY POLE
- 44 — NEW 1' CONTOUR
- 4945 — NEW 5' CONTOUR
- NEW CURB & GUTTER
- NEW CONCRETE
- EAST EASEMENT LINE
- 1 — POT HOLE LOCATION W/ NO.
- NEW EDGE OF PAVEMENT

SURVEY INFORMATION

FIELD NOTES

NO.	BY	DATE
11599	STEPHEN J. TOLER	05/00
	FROM SURVEYING	
	CONTROL, INC.	

BENCH MARKS

C.O.A. BENCHMARK "C-244" A.M.A.F.C.A. RIGHT OF WAY MARKER STAMPED "NAA-9" LOCATED IN THE SOUTHEAST QUADRANT OF THE INTERSECTION OF PASEO DEL NORTE AND THE NORTH DIVERSION CHANNEL. ELEV. = 5089.27 ft.

GROUND COORDINATES: NORTHING = 1,519,215.25 EASTING = 394,264.97

AS BUILT INFORMATION

CONTRACTOR A.S. Huber DATE 10/8

STAKES STAKED BY RBV DATE 1/6

INSPECTOR'S RED LINES BY SEC DATE 1/6

FIELD VERIFICATION BY SEC DATE 1/8

DRAWINGS CORRECTED BY TWS DATE 7/6/04

MICRO-FILM INFORMATION

RECORDED BY DATE

ENGINEERS SEAL

PATRICK J. CONLEY NEW MEXICO LICENSED PROFESSIONAL ENGINEER 10844 7/6/04

NO.	DATE	REMARKS	BY

REVISIONS

DESIGN

		DATE
DESIGNED BY	PJC	06/04
DRAWN BY	CAD	06/04
CHECKED BY	PJC	06/04

100101B

Smith Engineering Company
A Full Service Engineering Company
6400 Uptown Boulevard, N.E. Suite 500N Albuquerque, New Mexico 87110

CITY OF ALBUQUERQUE
PUBLIC WORKS DEPARTMENT
ENGINEERING DEVELOPMENT GROUP

TITLE: DOMINGO BACA ARROYO - NORTH DIVERSION CHANNEL TO WASHINGTON ST.

GENERAL NOTES AND LEGEND

Design Review Committee — APPROVED — DESIGN REVIEW COMMITTEE

City Engineer Approval — APPROVED — CITY ENGINEER

Last Design Update

No. / Day / Yr.	No. / Day / Yr.

City Project No.	Zone Map No.	Sheet	Of
6258.92	C-17-Z	2	14

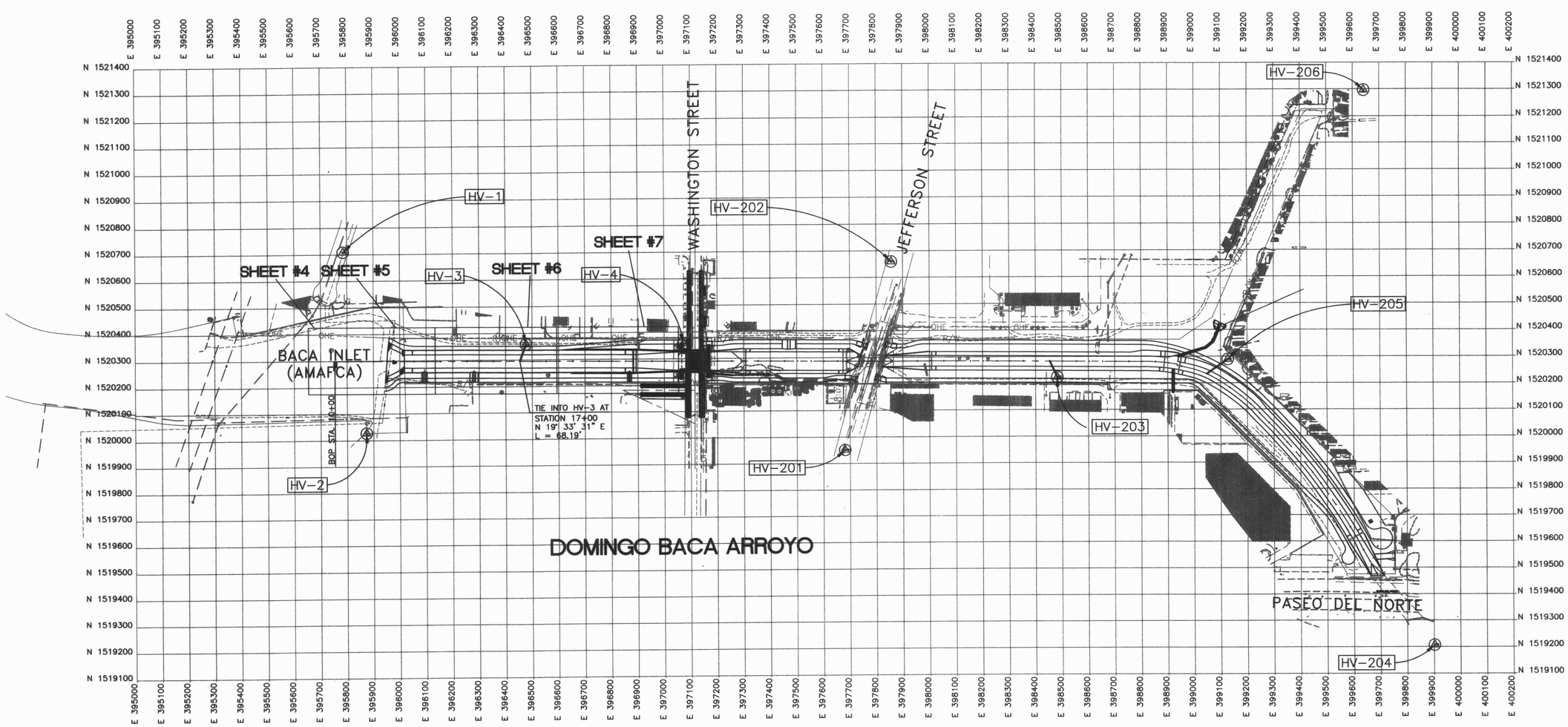

N

100' 0 200' 400'

SCALE: 1" = 200'

CONTROL INFORMATION

PNT #	DESCRIPTION	NORTHING	EASTING	ELEVATION
HV-1	PK NAIL IN ASPHALT IN CL WASHINGTON PL., 125' +/- SOUTH OF CL INTERSECTION W/ANAHEIM	1520708.66	395784.89	5085.03
HV-2	3" BC IN CM "A.M.A.F.C.A . FLOOD CONTROL R/W N4-19-2 PS 10464"	1520026.97	395873.19	5085.95
HV-3	#5 REBAR WITH PLASTIC CAP WITH ALUMINUM TAG "SCI 97084 1997 PP-3"	1520359.44	396476.61	5097.60
HV-4	#5 REBAR WITH PLASTIC CAP WITH ALUMINUM TAG "SCI 97084 1997 PP-4"	1520358.74	397071.55	5109.40
HV-5/HV-202	#5 RBR WITH PLASTIC CAP WITH TAG "SCI 97084 1997 PP-5"	1520659.78	397855.81	5124.49
HV-201	5/8" REBAR WITH RED SCI CAP, "CONTROL POINT NMPS 11599"	1519951.66	397680.37	5120.70
HV-203	5/8" REBAR WITH RED SCI CAP, "CONTROL POINT NMPS 11599"	1520223.33	398481.93	5134.80
HV-205	5/8" REBAR WITH RED SCI CAP, "CONTROL POINT NMPS 11599"	1520288.80	399126.44	5151.22
HV-206	PK NAIL	1521296.53	399640.99	5165.44
HV-204	5/8" REBAR WITH RED SCI CAP, "CONTROL POINT NMPS 11599"	1519206.75	399901.84	5167.18

AS BUILT INFORMATION
CONTRACTOR A.S. HORLEN
WORK STAKED BY RON DATE 1/05
INSPECTORS ACCEPTANCE BY SEC DATE 3/05
FIELD VERIFICATION BY SEC DATE 3/05
DRAWINGS CORRECTED BY JLT DATE 3/05
MICRO-FILM INFORMATION
RECORDED BY DATE
MRC Inspection Inc. Eng. Co.

BENCH MARKS
C.O.A. BENCHMARK "C-244" A.M.A.F.C.A. RIGHT OF WAY MARKER STAMPED "NAA-9" LOCATED IN THE SOUTHEAST QUADRANT OF THE INTERSECTION OF PASEO DEL NORTE AND THE NORTH DIVERSION CHANNEL. ELEV. = 5069.27 ft
GROUND COORDINATES: NORTHING = 1,519,215.25 EASTING = 394,264.97

SURVEY INFORMATION
FIELD NOTES

NO.	BY	DATE
11599	STEPHEN J. TOLER	05/00

FROM SURVEYING CONTROL, INC.

ENGINEERS SEAL
PATRICK J. CONLEY NEW MEXICO 10141 PROFESSIONAL ENGINEER
7/6/04

NO.	DATE	REMARKS	BY
		REVISIONS	
		DESIGN	

DESIGNED BY PJC DATE 06/04
DRAWN BY CAD DATE 06/04
CHECKED BY PJC DATE 06/04

100101B
Smith Engineering Company
A Full Service Engineering Company
6400 Uptown Boulevard, N.E. Suite 500E Albuquerque, New Mexico 87110

CITY OF ALBUQUERQUE
PUBLIC WORKS DEPARTMENT
ENGINEERING DEVELOPMENT GROUP

TITLE: DOMINGO BACA ARROYO - NORTH DIVERSION CHANNEL TO WASHINGTON ST.

PROJECT CONTROL INFORMATION

Design Review Committee: APPROVED DESIGN REVIEW COMMITTEE
City Engineer Approval: APPROVED CITY ENGINEER
Last Design Update
No. / Day / Yr. | No. / Day / Yr.

City Project No. 6258.92 | Zone Map No. C-17-Z | Sheet 3 Of 14

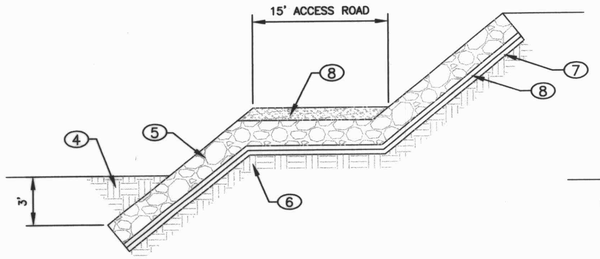

SECTION CUT A (3A | 3A)

N.T.S.

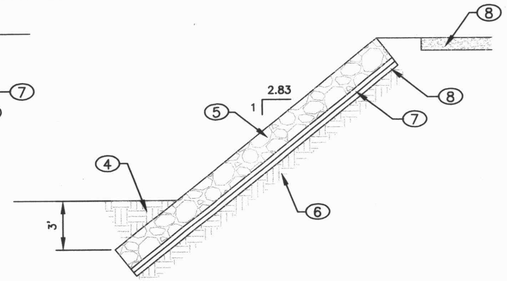

SECTION CUT B (3A | 3A)

N.T.S.

POT HOLING INFORMATION

NO.	BURY TO TOP OF PIPE	ELEV. TO TOP OF PIPE	DESCRIPTION		
			UTILITY	MATERIAL	DIAMETER
1	3'-3"	5084.8	GAS	PVC	4"
2	NOT LOCATED	N/A	N/A	N/A	N/A
3	2'-8"	5078.4	GAS	PVC	4"

NOTE: CONTRACTOR SHALL POT HOLE GAS LINE TO VERIFY ELEVATIONS PRIOR TO CONSTRUCTION.

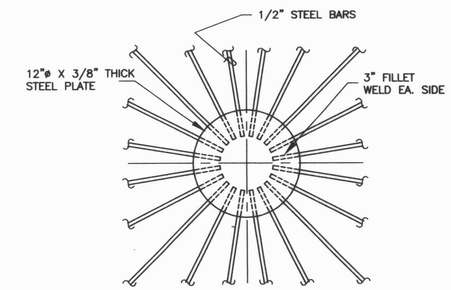

NOTE: PAINT GRATE SAME AS REQUIRED FOR CATCH BASIN GRATES PER COA STD DWG 2220.

STEEL PLATE DETAIL

1 1/2" = 1'-0"

KEYED NOTES:

1. CONSTRUCT ACCESS ROAD. SEE DETAIL SHEET 14.
2. RESEED DISTURBED AREAS
3. CONNECT ACCESS ROAD TO EXISTING ROAD.
4. BACKFILL OVER TOE OF STAKED RIP-RAP.
5. 1'-6" STAKED RIP-RAP PER COA STD. DWG. 2270.
6. 12" SUBGRADE COMPACTED TO 90% ASTM D-1557.
7. 6" TYPE II BEDDING MATERIAL COMPACTED TO 90% ASTM D-1557.
8. 6" TYPE I BEDDING MATERIAL COMPACTED TO 90% ASTM D-1557.
9. STA 12+24.25, 177.11' RT. CONSTRUCT 4' BEEHIVE INLET. SEE DETAILS THIS SHEET. 42" INV= 5083.00
10. STA 11+42.48, 157.60' RT. INSTALL 84 LF 42" RCP CLASS IV @ S= 0.025 FT/FT. INV= 5081.00

CURVE DATA

NO.	DELTA	RADIUS	LEN.	TAN.
C1	73°28'14"	110.52	141.71	82.48
C2	82°16'12"	90.89	130.51	79.39
C3	87°42'28"	67.84	103.85	65.18
C4	76°12'56"	37.90	50.42	29.73
C5	20°01'02"	203.71	71.17	35.95

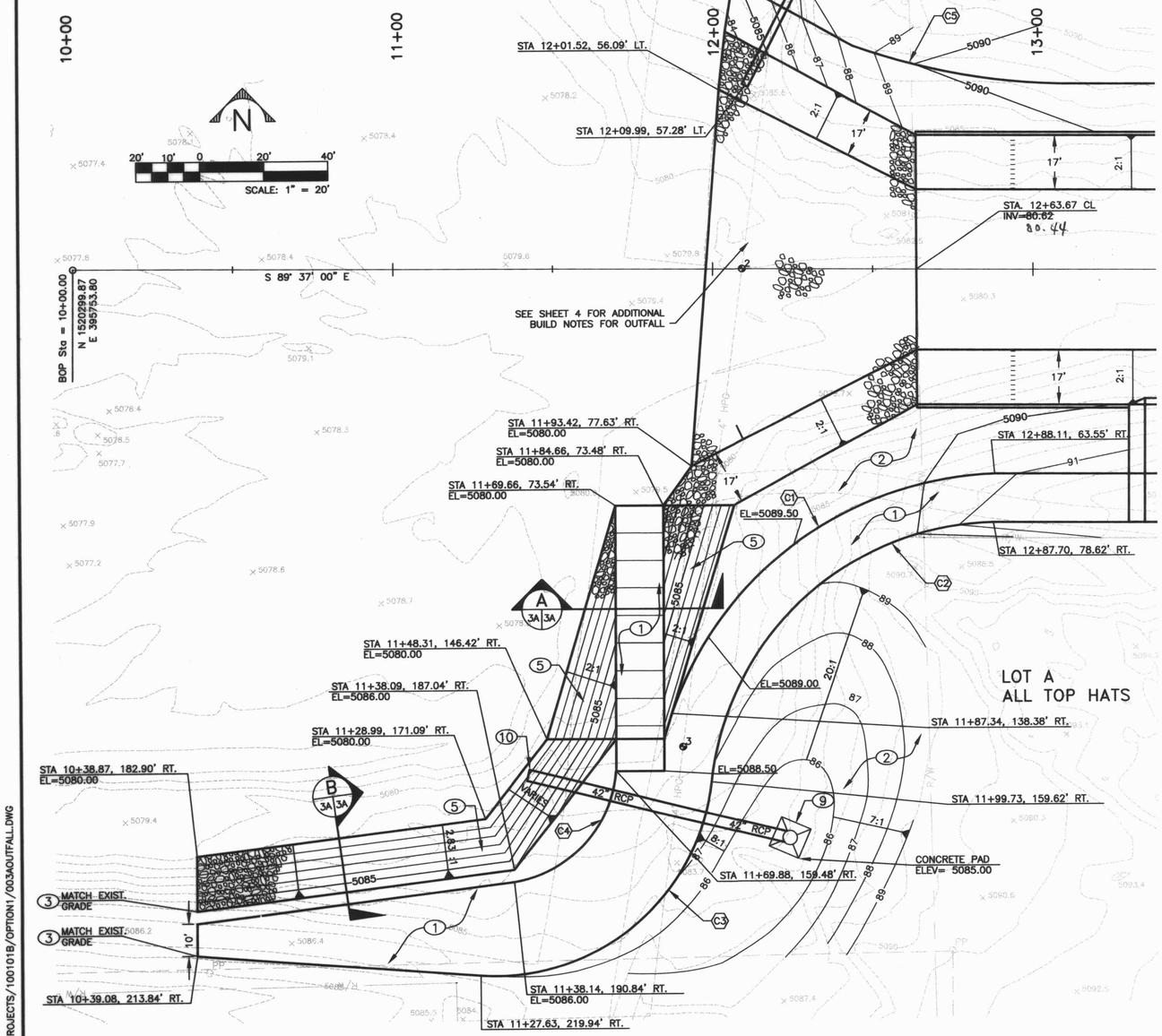

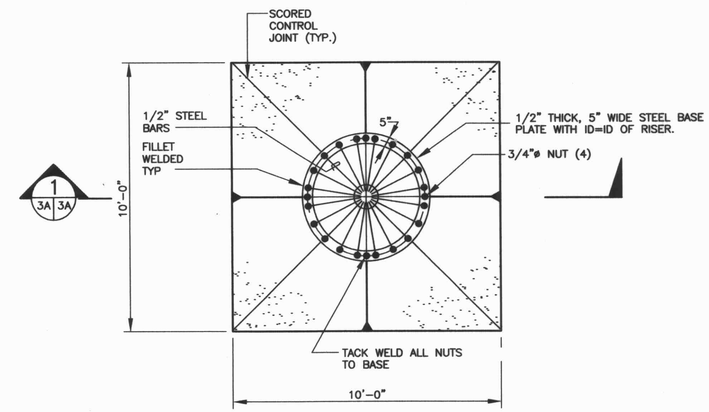

BEEHIVE INLET PLAN VIEW

3/8" = 1'-0"

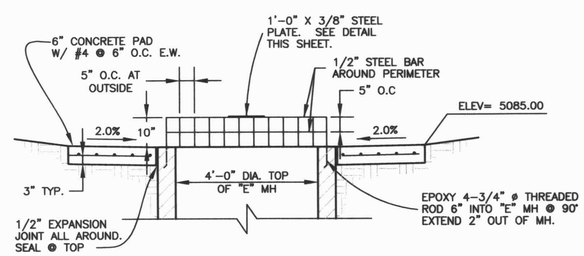

SECTION: BEEHIVE INLET (1 | 3A | 3A)

1/2" = 1'-0"

AS BUILT INFORMATION
CONTRACTOR A.S. HOMER
WORK STAKED BY BDM DATE 1/05
INSPECTORS ACCEPTANCE BY SEC DATE 1/05
VERIFICATION BY SEC DATE 3/05
DRAWINGS CORRECTED BY STWT DATE 3/05
MICRO-FILM INFORMATION
RECORDED BY DATE
NO.

BENCH MARKS
C.O.A. BENCHMARK "C-244" A.M.A.F.C.A. RIGHT OF WAY MARKER STAMPED "NAA-9" LOCATED IN THE SOUTHEAST QUADRANT OF THE INTERSECTION OF PASEO DEL NORTE AND THE NORTH DIVERSION CHANNEL. ELEV. = 5069.27 ft
GROUND COORDINATES: NORTHING = 1,519,215.25 EASTING = 394,284.97

SURVEY INFORMATION
FIELD NOTES

NO.	BY	DATE
11599	STEPHEN J. TOLER FROM SURVEYING CONTROL, INC.	05/00

ENGINEERS SEAL
STEPHEN J. CONLEY PATRICK NEW MEXICO 10141 PROFESSIONAL ENGINEER
7/29/04

NO.	DATE	REMARKS	BY
1	7/29/04	ADDENDUM #1	RL

REVISIONS

DESIGN

		DATE
DESIGNED BY	PJC	06/04
DRAWN BY	CAD	06/04
CHECKED BY	PJC	06/04

100101B
Smith Engineering Company
A Full Service Engineering Company
6400 Uptown Boulevard, N.E. Suite 200B Albuquerque, New Mexico 87110

CITY OF ALBUQUERQUE
PUBLIC WORKS DEPARTMENT
ENGINEERING DEVELOPMENT GROUP

TITLE: DOMINGO BACA ARROYO - NORTH DIVERSION CHANNEL TO WASHINGTON ST.

CHANNEL OUTFALL PLAN

Design Review Committee	City Engineer Approval	Last Design Update	No. / Day / Yr.	No. / Day / Yr.

City Project No.	Zone Map No.	Sheet	Of
6258.92	C-17-Z	3A	14

ADDENDUM #1 7/29/04 PAGE 4

Z:/PROJECTS/100101B/OPTION1/003AOUTFALL.DWG

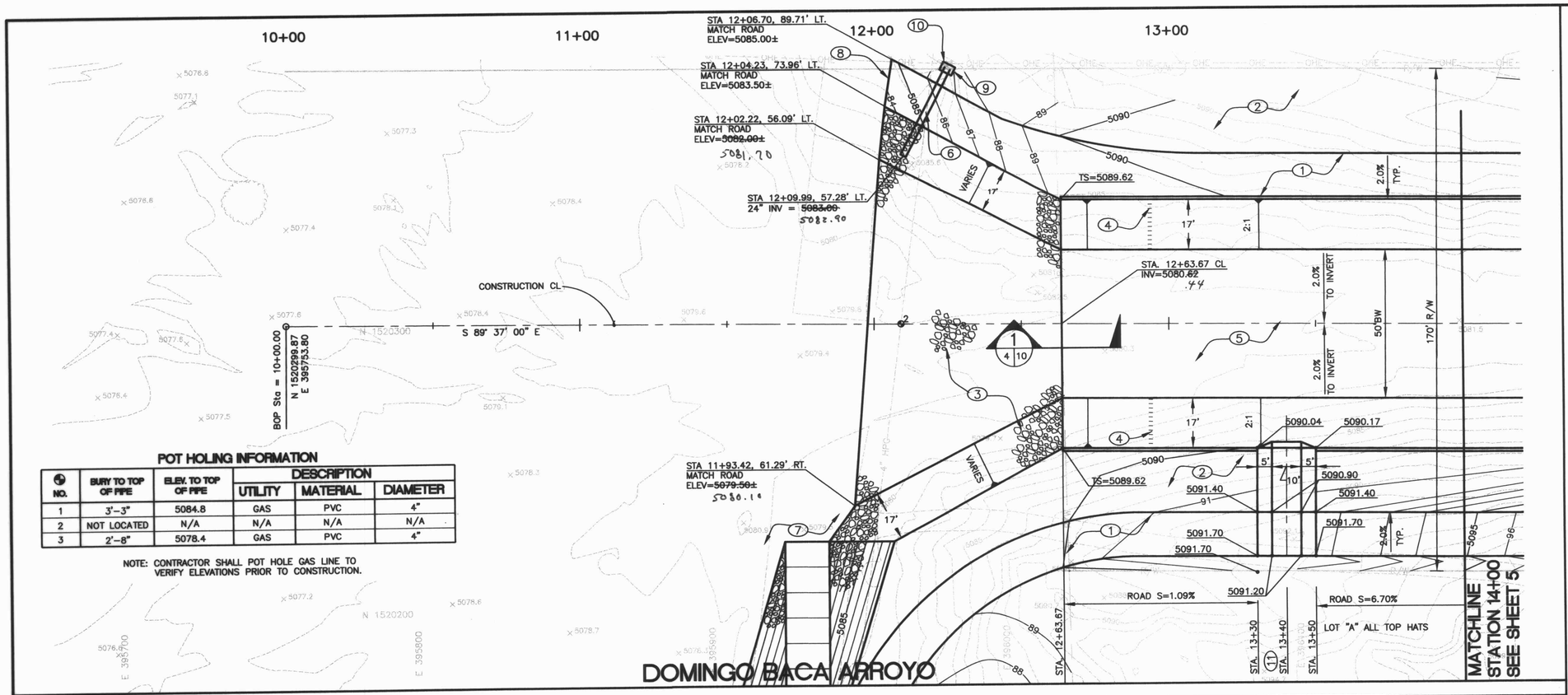

POT HOLING INFORMATION

NO.	BURY TO TOP OF PIPE	ELEV. TO TOP OF PIPE	DESCRIPTION		
			UTILITY	MATERIAL	DIAMETER
1	3'-3"	5084.8	GAS	PVC	4"
2	NOT LOCATED	N/A	N/A	N/A	N/A
3	2'-8"	5078.4	GAS	PVC	4"

NOTE: CONTRACTOR SHALL POT HOLE GAS LINE TO VERIFY ELEVATIONS PRIOR TO CONSTRUCTION.

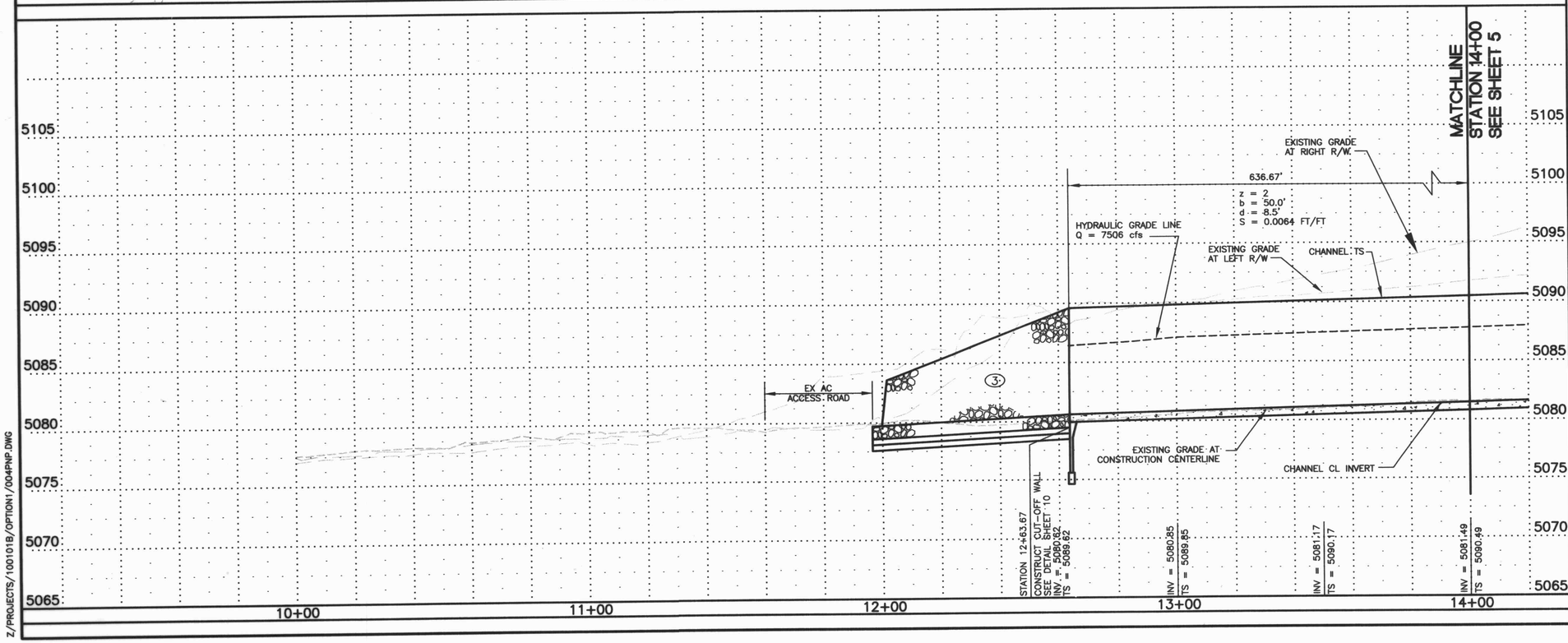

KEYED NOTES:

1. CONSTRUCT 15' ACCESS ROAD. SEE DETAIL SHEET 14.
2. RESEED DISTURBED AREAS
3. PLACE STAKED RIP-RAP AT OUTFALL. SEE SECTIONS SHEET 10.
4. INSTALL ACCESS STEPS PER C.O.A. STD. DWG. 2261.
5. CONSTRUCT NEW PCC CHANNEL, PER COA STD. DWG. 2261 AND DETAILS SHEET 9
6. INSTALL 24" STORM DRAIN PIPE AND CONNECT INTO CHANNEL OUTFALL. SEE DETAIL THIS SHEET.
7. MOVE DIRT OFF OF EXISTING ROAD DOWN TO ASPHALT.
8. CONNECT ACCESS ROAD TO EXISTING ROAD.
9. CONSTRUCT RPCC COLLAR PER DETAIL B/14. 24" INVERT AT COLLAR = 5084.85. CONTRACTOR SHALL FIELD VERIFY INVERT AND NOTIFY ENGINEER OF ANY DISCREPANCIES SO THAT DESIGN ADJUSTMENTS CAN BE MADE.
10. REMOVE AND DISPOSE OF EXISTING HEADWALL.
11. CONSTRUCT RPCC RUNDOWN TO GRADES. SEE SHEET 12.

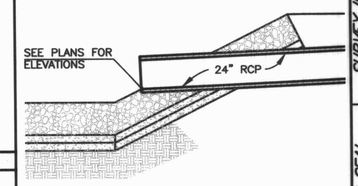

24" STORM DRAIN INLET

NTS

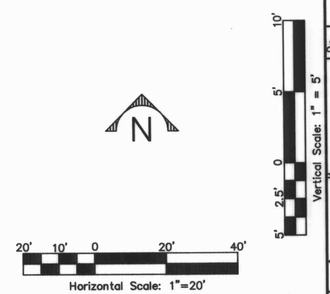

AS BUILT INFORMATION
CONTRACTOR A.S. Horner
WORK STAKED BY SBM DATE 1/6/
ACCEPTANCE BY SEC DATE 1/05
FIELD VERIFICATION BY SEC DATE 3/05
DRAWINGS CORRECTED BY JAK DATE 3/05
MICRO-FILM INFORMATION
RECORDED BY DATE
NO.

BENCH MARKS
C.O.A. BENCHMARK "C-244" A.M.A.F.C.A. RIGHT OF WAY MARKER STAMPED "NAA-9" LOCATED IN THE SOUTHEAST QUADRANT OF THE INTERSECTION OF PASEO DEL NORTE AND THE NORTH DIVERSION CHANNEL. ELEV. = 5069.27 ft
GROUND COORDINATES: NORTHING = 1,519,215.25 EASTING = 394,264.97

SURVEY INFORMATION
FIELD NOTES

NO.	BY	DATE
11599	STEPHEN J. TOLER FROM SURVEYING CONTROL, INC.	05/00

ENGINEERS SEAL
PATRICK J. CONLEY NEW MEXICO LICENSED PROFESSIONAL ENGINEER 10141
7/29/04

NO.	DATE	REMARKS
1	7/29/04	ADDENDUM #1

REVISIONS

DESIGN

		DATE
DESIGNED BY	PJC	06/04
DRAWN BY	CAD	06/04
CHECKED BY	PJC	06/04

Smith Engineering Company
A Full Service Engineering Company
5555 Uptown Boulevard, N.E. Suite 2000 Albuquerque, New Mexico 87110
100101B

CITY OF ALBUQUERQUE
PUBLIC WORKS DEPARTMENT
ENGINEERING DEVELOPMENT GROUP

TITLE: DOMINGO BACA ARROYO - NORTH DIVERSION CHANNEL TO WASHINGTON ST.

CHANNEL PLAN & PROFILE: STA 12+63.67 TO 14+00

Design Review Committee | City Engineer Approval | Last Design Update | No. / Day / Yr. | No. / Day / Yr.

City Project No. 6258.92 | Zone Map No. C-17-Z | Sheet 4 Of 14

Z:/PROJECTS/100101B/OPTION1/0044PNP.DWG

ADDENDUM #1 7/29/04 PAGE 5

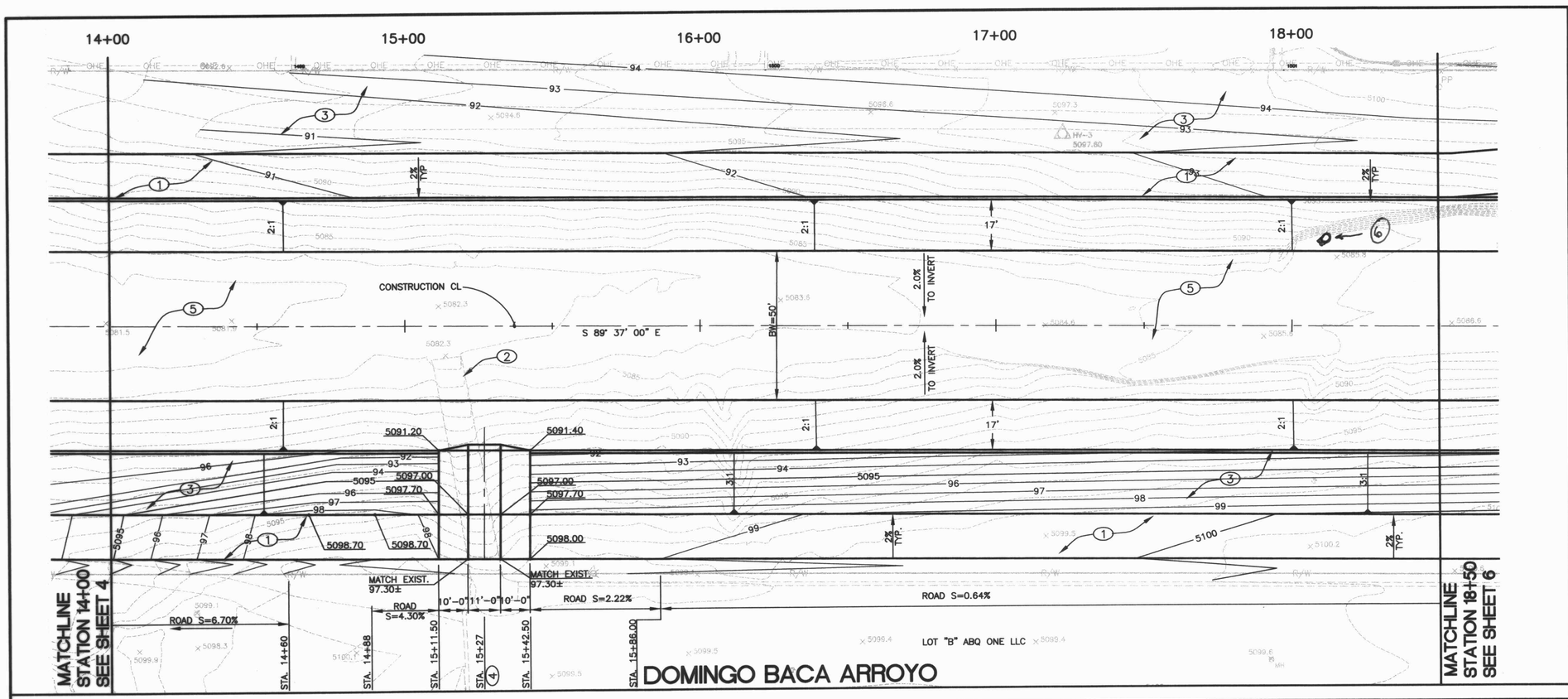

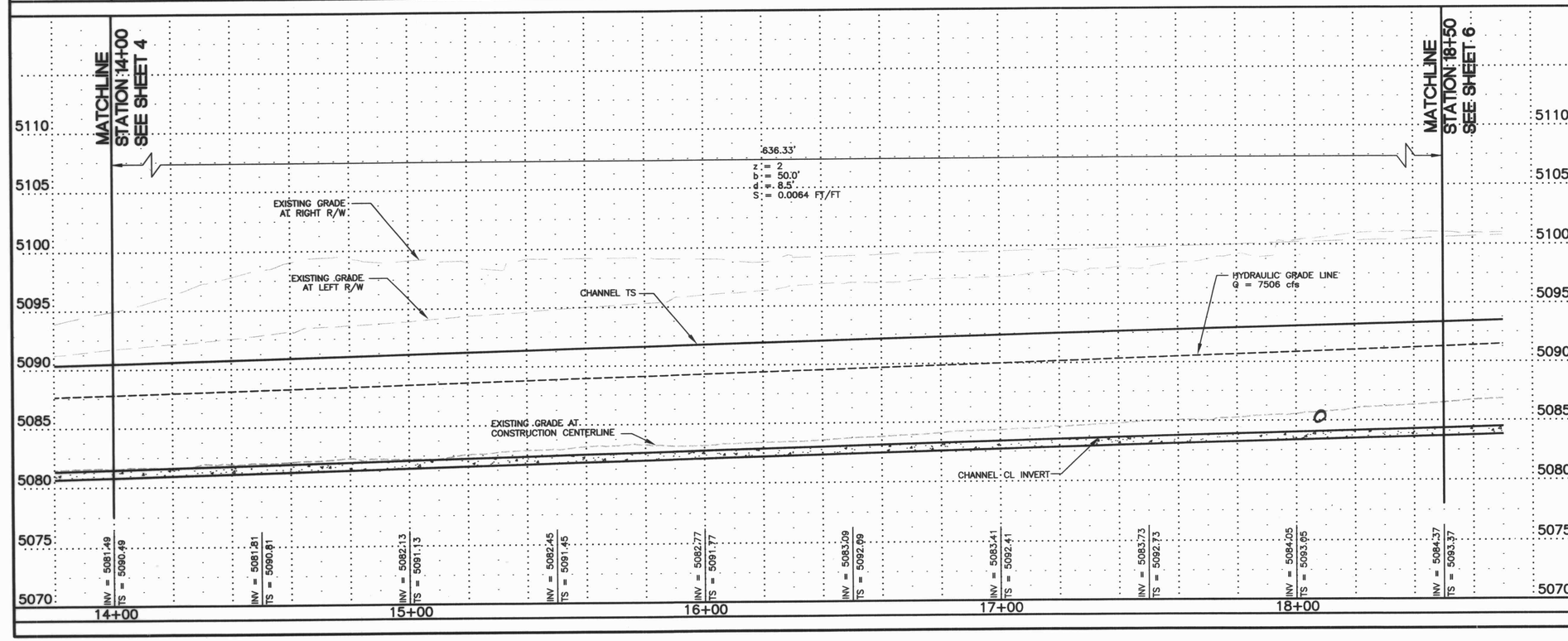

KEYED NOTES:

1. CONSTRUCT 15' ACCESS ROAD. SEE DETAIL SHEET 14.
2. REMOVE AND DISPOSE OF EXISTING RPCC RUNDOWN.
3. RESEED DISTURBED AREAS PER SPEC 1012
4. CONSTRUCT NEW RPCC RUNDOWN TO GRADES SHOWN. SEE DETAILS SHEET 12
5. CONSTRUCT RPCC CHANNEL PER COA STD DWG. 2261 AND DETAILS SHEET 9.
6. 18" RCP penetration 18+12 El. Inv. = 5084.91

N

Horizontal Scale: 1"=20'

Vertical Scale: 1" = 5'

Smith Engineering Company
A Full Service Engineering Company
5400 Uptown Boulevard, N.E. Suite 500E Albuquerque, New Mexico 87110
100101B

CITY OF ALBUQUERQUE
PUBLIC WORKS DEPARTMENT
ENGINEERING DEVELOPMENT GROUP

TITLE: DOMINGO BACA ARROYO - NORTH DIVERSION CHANNEL TO WASHINGTON ST.

CHANNEL PLAN & PROFILE: STA 14+00 TO 18+50

Design Review Committee	City Engineer Approval	Last Design Update	No. / Day / Yr.	No. / Day / Yr.
DESIGN COMMITTEE	CITY ENGINEER			

City Project No.	Zone Map No.	Sheet	Of
6258.92	C-17-Z	5	14

AS BUILT INFORMATION
CONTRACTOR A.S. Horner DATE 1/05
STAMPED BY BOR DATE 1/05
INSPECTOR'S REVIEW BY SEC DATE 3/05
FIELD VERIFICATION BY SEC DATE 3/05
CORRECTED BY JGR DATE 3/05
MICRO-FILM INFORMATION
RECORDED BY DATE
NO.

BENCH MARKS
C.O.A. BENCHMARK "C-244" A.M.A.F.C.A. RIGHT OF WAY MARKER STAMPED "NAA-9" LOCATED IN THE SOUTHEAST QUADRANT OF THE INTERSECTION OF PASEO DEL NORTE AND THE NORTH DIVERSION CHANNEL. ELEV. = 5069.27 ft
GROUND COORDINATES: NORTHING = 1,519,215.25 EASTING = 394,264.97

SURVEY INFORMATION
FIELD NOTES

NO.	BY	DATE
11599	STEPHEN J. TOLER	05/00
	FROM SURVEYING	
	CONTROL, INC.	

ENGINEERS SEAL
PATRICK J. CONLEY NEW MEXICO 14841 PROFESSIONAL ENGINEER
7/6/04

NO.	DATE	REMARKS	BY

REVISIONS

DESIGNED BY	PJC	DATE 06/04
DRAWN BY	CAD	DATE 06/04
CHECKED BY	PJC	DATE 06/04

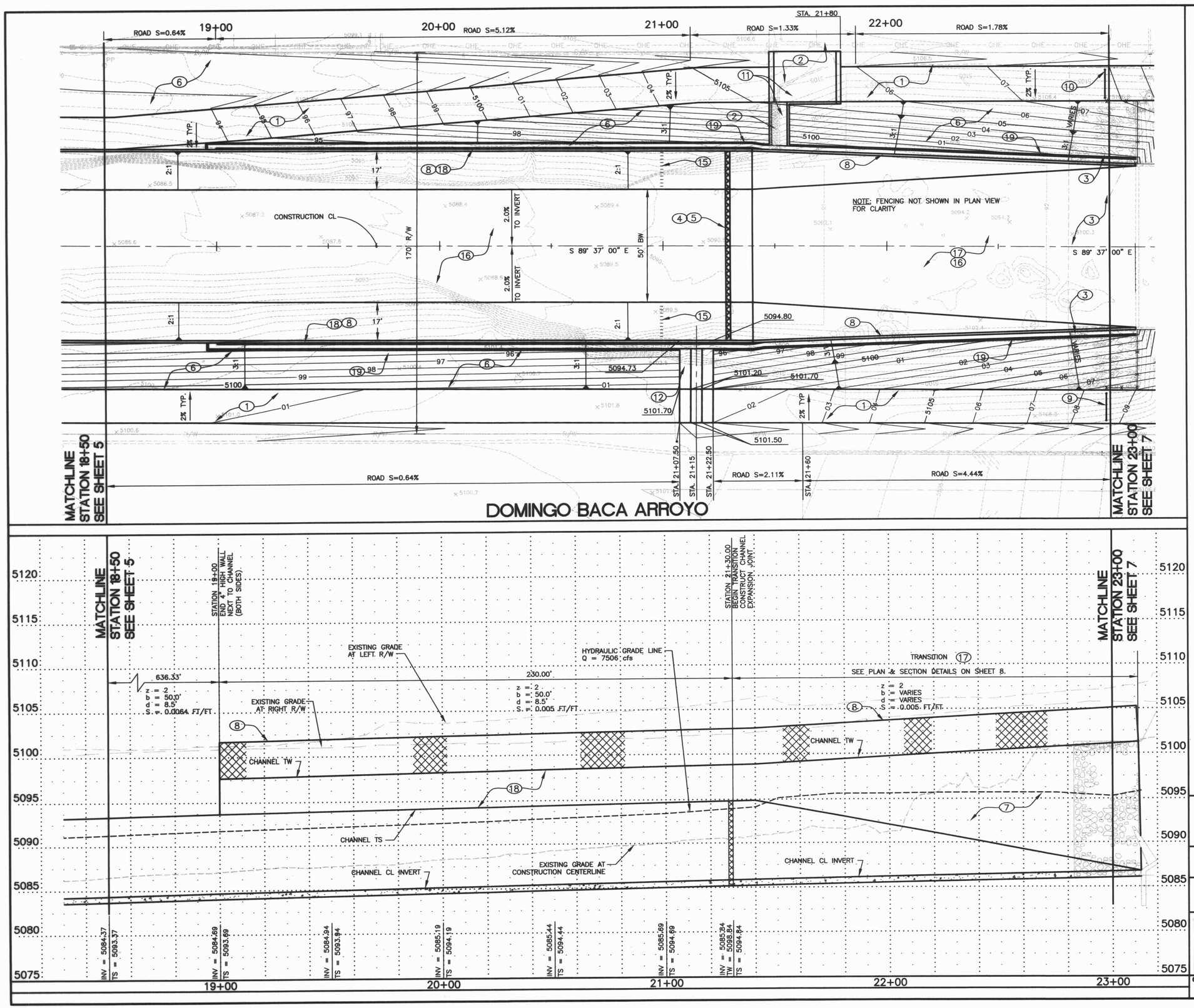

KEYED NOTES:

1. CONSTRUCT 15' ACCESS ROAD. SEE SHEET 13.
2. REMOVE AND DISPOSE OF EXISTING RPCC RUNDOWN AND RIP-RAP.
3. REMOVE AND DISPOSE OF EXISTING RIP-RAP.
4. CONSTRUCT CHANNEL EXPANSION JOINT WITH SLEEPER PER C.O.A. STD. DWG. 2265.
5. INSTALL STEP JOINT PROTECTION PLATE PER C.O.A. STD. DWG. 2268.
6. RESEED DISTURBED AREA PER SPEC 1012.
7. VERTICAL WALL OF TRANSITION.
8. INSTALL 4' CHAIN LINK FENCE ON VERTICAL WALLS BOTH SIDES. SEE MOUNTING DETAIL SHEET 14.
9. CONSTRUCT 12' WIDE PIPE GATE PER COA STD DWG 2251. SET HINGE ON SOUTH AND SWING TO THE WEST.
10. CONSTRUCT 12' WIDE PIPE GATE PER COA STD DWG 2251. SET HINGE ON NORTH AND SWING TO THE WEST.
11. CONSTRUCT NEW RPCC RUNDOWN. CONNECT TO 2' WIDE CONC. SWALE. SEE DETAILS SHEET 13.
12. CONSTRUCT NEW RPCC RUNDOWN. CONNECT TO 2' WIDE CONC. SWALE.
13. NOT USED
14. NOT USED
15. INSTALL ACCESS STEPS PER C.O.A. STD. DWG. 2261.
16. CONSTRUCT NEW PCC CHANNEL PER COA STD. DWG. 2261 AND DETAILS SHEET 9.
17. CONSTRUCT TRANSITION SEE SHEET 8/16.
18. CONSTRUCT 4' WALL AT SHOULDER OF CHANNEL. SEE DETAIL B/11.
19. CONSTRUCT 2' WIDE RPCC SWALE. SEE DETAIL SHEET 11.

N

Horizontal Scale: 1"=20'

Vertical Scale: 1" = 5'

AS BUILT INFORMATION
CONTRACTOR A.S. HOLMES
WORK STAKED BY ROA DATE 1/06
STAKING CHECKS BY SEC DATE 3/06
ACCEPTANCE BY SEC DATE 3/06
VERIFICATION BY SEC DATE 3/06
DRAWINGS CORRECTED BY JWS DATE 3/06
MICRO-FILM INFORMATION
RECORDED BY DATE
NO.

BENCH MARKS
C.O.A. BENCHMARK "C-244" A.M.A.F.C.A. RIGHT OF WAY MARKER STAMPED "NAA-9" LOCATED IN THE SOUTHEAST QUADRANT OF THE INTERSECTION OF PASEO DEL NORTE AND THE NORTH DIVERSION CHANNEL. ELEV. = 5069.27 ft.
GROUND COORDINATES: NORTHING = 1,519,215.25 EASTING = 394,264.97

SURVEY INFORMATION
FIELD NOTES

NO.	BY	DATE
11599	STEPHEN J. TOLER FROM SURVEYING CONTROL, INC.	05/00

ENGINEERS SEAL
NEW MEXICO PATRICK J. CONLEY 10141 PROFESSIONAL ENGINEER
7/6/04

NO.	DATE	REMARKS	BY
		REVISIONS	

DESIGN

		DATE
DESIGNED BY	PJC	06/04
DRAWN BY	CAD	06/04
CHECKED BY	PJC	06/04

100101B
Smith Engineering Company
A Full Service Engineering Company
5400 Uptown Boulevard, N.E. Suite 2000 Albuquerque, New Mexico 87109

CITY OF ALBUQUERQUE
PUBLIC WORKS DEPARTMENT
ENGINEERING DEVELOPMENT GROUP

TITLE: DOMINGO BACA ARROYO - NORTH DIVERSION CHANNEL TO WASHINGTON ST.

CHANNEL PLAN & PROFILE: STA 18+50 TO 23+00

Design Review Committee — DESIGN REVIEW COMMITTEE
City Engineer Approval — CITY ENGINEER
Last Design Update | No. / Day / Yr. | No. / Day / Yr.

City Project No.	Zone Map No.	Sheet	Of
6258.92	C-17-Z	6	14

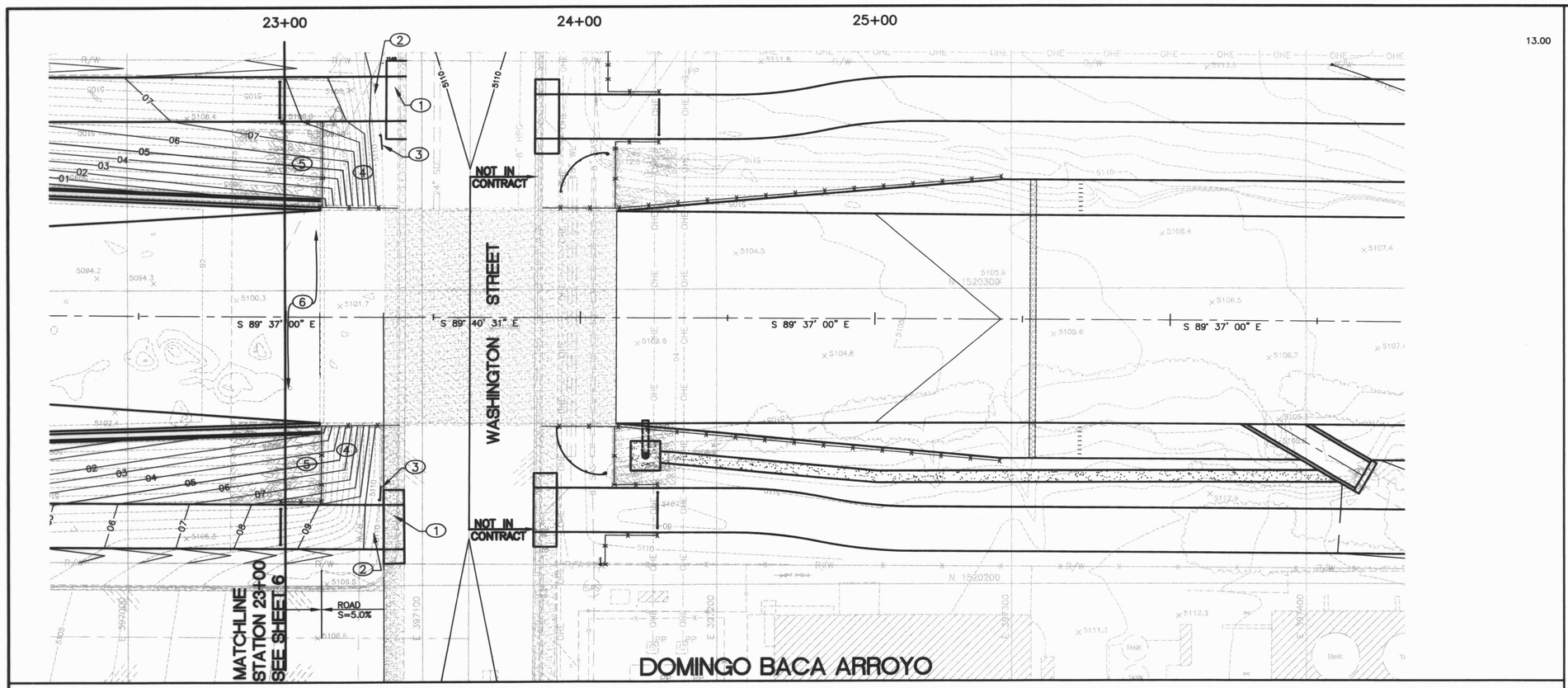

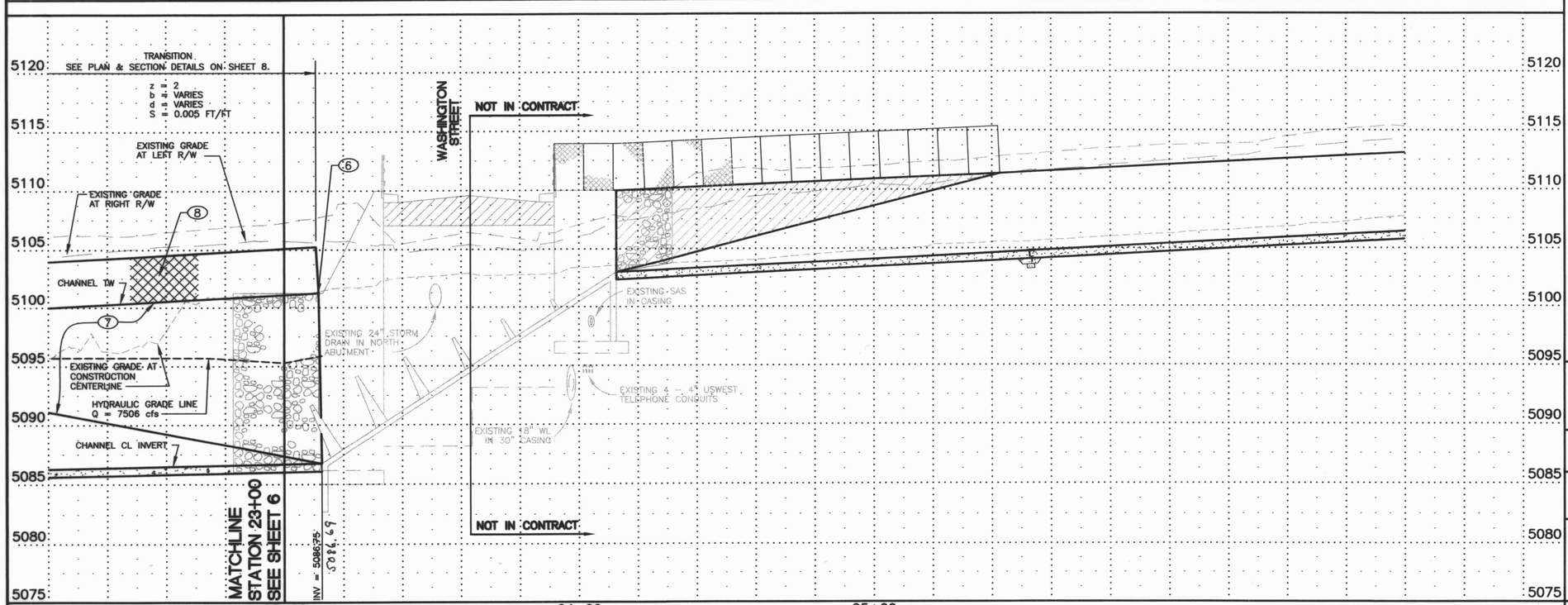

KEYED NOTES:

1. CONSTRUCT ACCESS ROAD CURB CUTS PER DETAILS SHEET 13.
2. REMOVE AND DISPOSE OF APPROXIMATELY 22 LF OF GUARD RAIL.
3. INSTALL NEW END SECTION ON EXISTING GUARD RAIL PER COA. STD. DWG. 2636.
4. PLACE 2" GRAVEL MULCH AND RESEED AREAS WITH SLOPE >3:1.
5. RESEED AREAS WITH SLOPE = 3:1.
6. SEE SHEET 8 FOR TRANSITION AND CONNECTION DETAILS
7. VERTICAL WALLS OF TRANSITION.
8. INSTALL 4' CHAIN LINK FENCE ON VERTICAL WALLS BOTH SIDES. SEE MOUNTING DETAIL SHEET 14.

N

20' 10' 0 20' 40'
Horizontal Scale: 1"=20'

10' 5' 0 2.5' 5'
Vertical Scale: 1" = 5'

100101B
Smith Engineering Company
A Full Service Engineering Company
6400 Uptown Boulevard, N.E. Suite 200B Albuquerque, New Mexico 87110

CITY OF ALBUQUERQUE
PUBLIC WORKS DEPARTMENT
ENGINEERING DEVELOPMENT GROUP

TITLE: DOMINGO BACA ARROYO - NORTH DIVERSION CHANNEL TO WASHINGTON ST.

CHANNEL PLAN & PROFILE: STA 23+00 TO 27+50

Design Review Committee	City Engineer Approval	Last Design Update	No. / Day / Yr.	No. / Day / Yr.
DESIGN REVIEW COMMITTEE	CITY ENGINEER			

City Project No.	Zone Map No.	Sheet	Of
6258.92	C-17-Z	7	14

AS BUILT INFORMATION
CONTRACTOR A.S. Horner
WORK STAKED BY BOW DATE 1/05
INSPECTOR'S ACCEPTANCE BY SEC DATE 3/05
FIELD VERIFICATION BY SEC DATE 3/10
DRAWING CORRECTED BY JAS DATE 3/05
MICRO-FILM INFORMATION
RECORDED BY DATE
NO.

BENCH MARKS
C.O.A. BENCHMARK "C-244" A.M.A.F.C.A. RIGHT OF WAY MARKER STAMPED "NAA-9" LOCATED IN THE SOUTHEAST QUADRANT OF THE INTERSECTION OF PASEO DEL NORTE AND THE NORTH DIVERSION CHANNEL. ELEV. = 5089.27 ft
GROUND COORDINATES: NORTHING = 1,519,215.25 EASTING = 394,264.97

SURVEY INFORMATION
FIELD NOTES

NO.	BY	DATE
11599	STEPHEN J. TOLER FROM SURVEYING CONTROL, INC.	05/00

ENGINEER'S SEAL
PATRICK J. CONLEY NEW MEXICO 10141 LICENSED PROFESSIONAL ENGINEER
7/6/04

REVISIONS

NO.	DATE	REMARKS	BY

DESIGN

DESIGNED BY	PJC	DATE 06/04
DRAWN BY	CAD	DATE 06/04
CHECKED BY	PJC	DATE 06/04

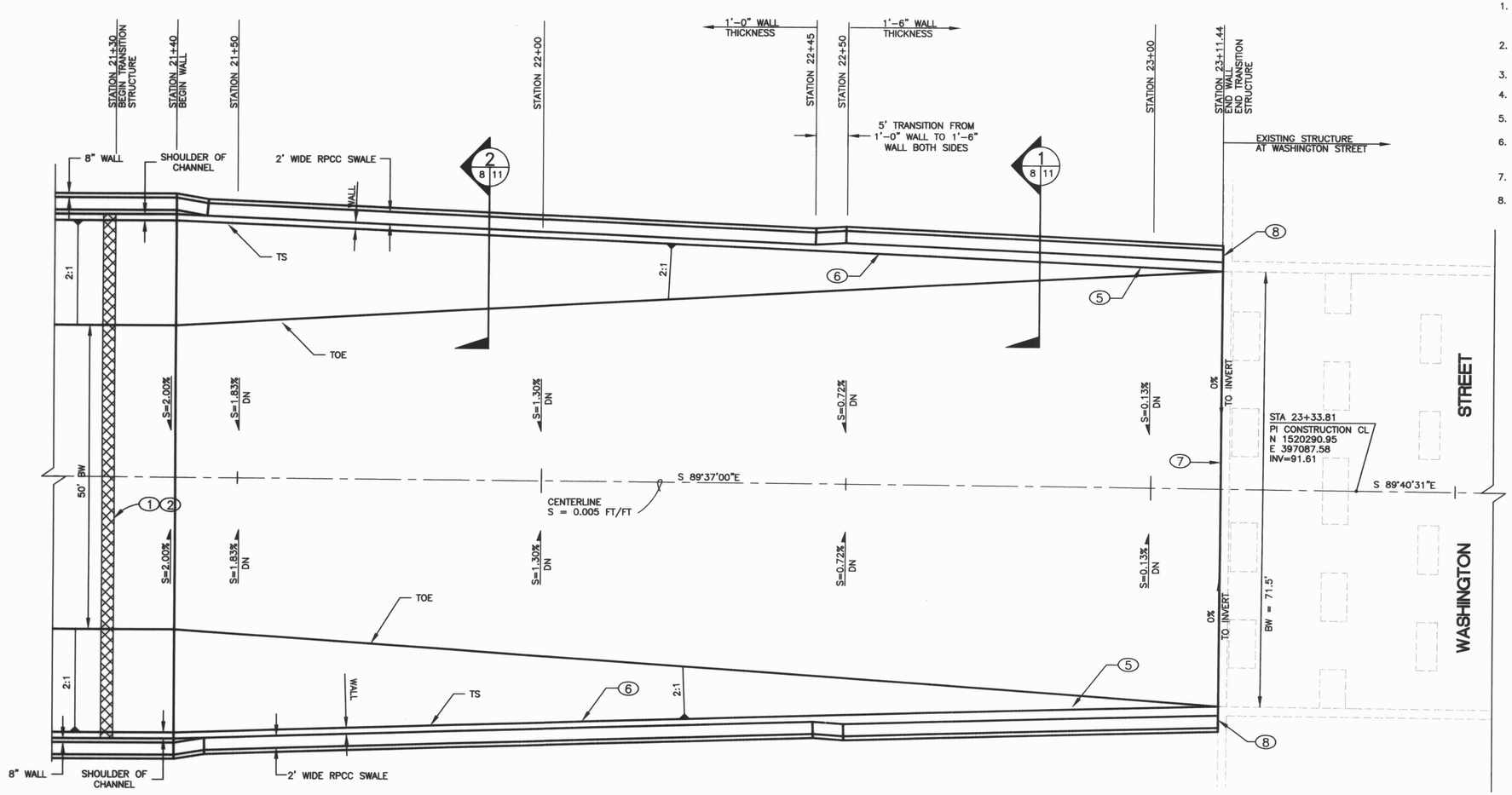

KEYED NOTES:

1. CONSTRUCT CHANNEL EXPANSION JOINT WITH SLEEPER PER C.O.A. STD. DWG. 2265.
2. INSTALL STEP JOINT PROTECTION PLATE PER C.O.A. STD. DWG. 2268.
3. VERTICAL FACE OF WALL IN CHANNEL.
4. SEE B/11 FOR BAFFLE CONNECTION.
5. SEE D/11 FOR EDGE DETAIL.
6. SEE A/11 FOR EXPANSION JOINT PLACEMENT AGAINST WALL.
7. SEE 8/11 FOR CONNECTION TO BAFFLE APRON.
8. SEE C/11 FOR CONNECTION TO HEADWALL.

PLAN LAYOUT AT TRANSITION SECTION STATION 21+30.00 TO STATION 23+11.44

1" = 10'

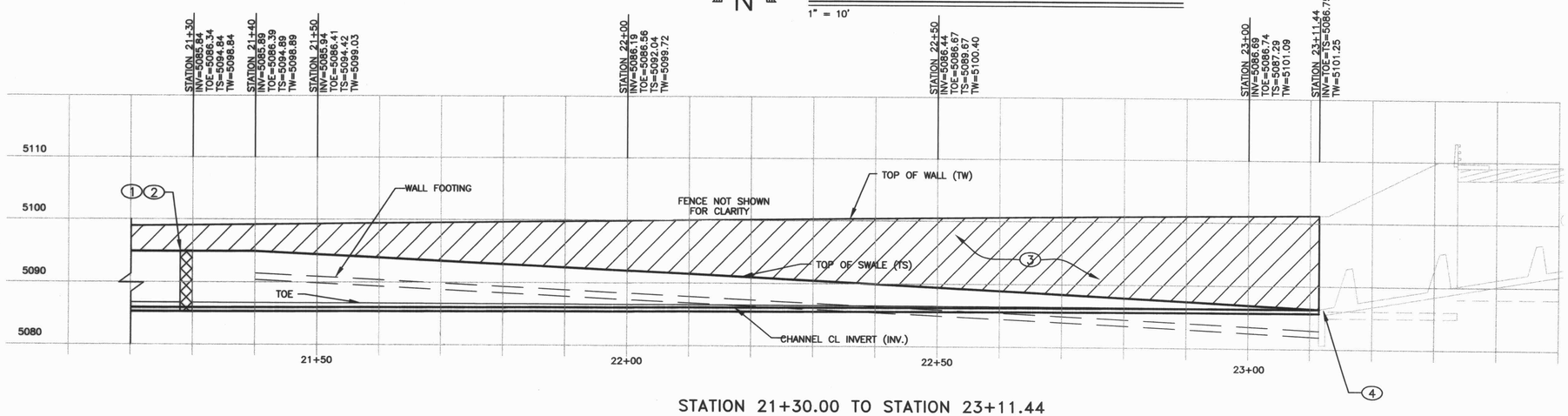

STATION 21+30.00 TO STATION 23+11.44

1" = 10'

AS BUILT INFORMATION

CONTRACTOR A.S. HORNER
WORK STAKED BY RDM DATE 1/05
INSPECTOR'S ACCEPTANCE BY SFC DATE 3/05
FIELD VERIFICATION BY SFC DATE 3/05
DRAWINGS CORRECTED BY SJR DATE 3/05

MICRO-FILM INFORMATION
RECORDED BY DATE
NO.

BENCH MARKS

C.O.A. BENCHMARK "C-244" A.M.A.F.C.A. RIGHT OF WAY MARKER STAMPED "NAA-9" LOCATED IN THE SOUTHEAST QUADRANT OF THE INTERSECTION OF PASEO DEL NORTE AND THE NORTH DIVERSION CHANNEL. ELEV. = 5069.27 ft.

GROUND COORDINATES: NORTHING = 1,519,215.25 EASTING = 394,284.97

SURVEY INFORMATION

FIELD NOTES

NO.	BY	DATE
11599	STEPHEN J. TOLER	05/00
	FROM SURVEYING	
	CONTROL, INC.	

ENGINEERS SEAL

PATRICK J. CONLEY NEW MEXICO 10141 PROFESSIONAL ENGINEER

7/6/06

NO.	DATE	REMARKS	BY
		REVISIONS	

DESIGN

		DATE
DESIGNED BY	PJC	06/04
DRAWN BY	CAD	06/04
CHECKED BY	PJC	06/04

100101B

Smith Engineering Company
A Full Service Engineering Company
5400 Uptown Boulevard, N.E. Suite 500E Albuquerque, New Mexico 87110

CITY OF ALBUQUERQUE
PUBLIC WORKS DEPARTMENT
ENGINEERING DEVELOPMENT GROUP

TITLE: DOMINGO BACA ARROYO - NORTH DIVERSION CHANNEL TO WASHINGTON ST.

TRANSITION : WEST SIDE WASHINGTON ST.

Design Review Committee — DESIGN REVIEW COMMITTEE
City Engineer Approval — CITY ENGINEER
Last Design Update
No. / Day / Yr. | No. / Day / Yr.

City Project No.	Zone Map No.	Sheet	Of
6258.92	C-17-Z	8	14

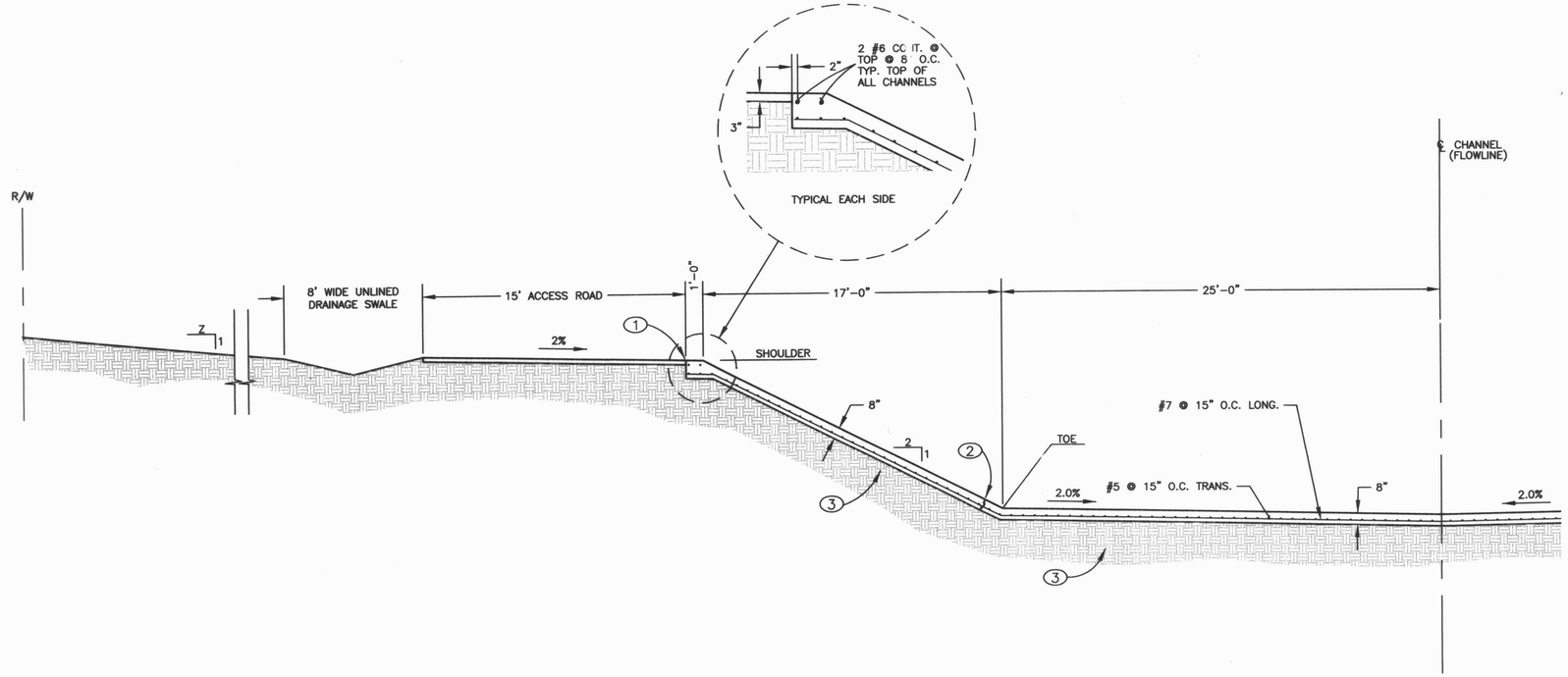

STA 12+63.67 TO STA 21+40.00 (NORTH SIDE OF CONST. CL)

1/4" = 1'-0"

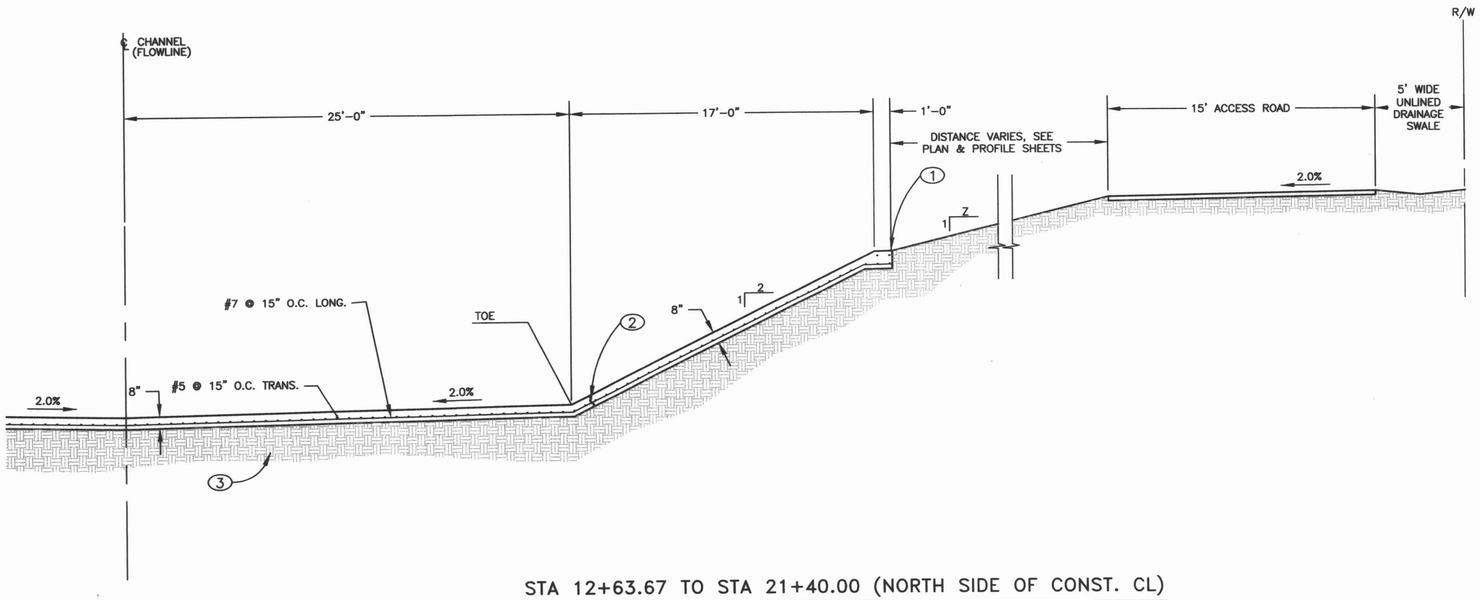

STA 12+63.67 TO STA 21+40.00 (NORTH SIDE OF CONST. CL)

1/4" = 1'-0"

KEYED NOTES:

1. THICKENED EDGE PER C.O.A. STD. DWG. 2261.
2. CONSTRUCTION JOINT PER C.O.A. STD. DWG. 2261.
3. 12" SUBGRADE PREP UNDER CHANNEL COMPACTED TO 95% ASTM D-1557 AT OPTIMUM MOISTURE OF ±2%

Z = SLOPE FOR GRADING AROUND CHANNEL SEE PLAN AND PROFILE SHEETS.

NOTE:

CROSS-SECTIONAL DIMENSIONS OF CHANNEL REMAIN THE SAME AS SHOWN ON THIS SHEET FROM STA. 13+03.67 TO 12+63.67.

CHANNEL EAST OF 21+40.00 IS THE TRANSITION TO VERTICAL WALLS. SEE SHEET 8/16 FOR TRANSITION GEOMETRY.

ONLY SAND CHAIRS ARE ACCEPTABLE FOR REINFORCING SUPPORT. BRICKS WILL NOT BE ALLOWED.

Vertical Scale: 1" = 5'

Horizontal Scale: 1"=20'

AS BUILT INFORMATION
CONTRACTOR A.S. Haynes
WORK STAKED BY BDM DATE 11/05
INSPECTOR'S ACCEPTANCE BY SEC DATE 3/06
VERIFICATION BY SEC DATE 3/05
DRAWINGS CORRECTED BY JWS DATE 3/05
MICRO-FILM INFORMATION
RECORDED BY DATE
NO.

BENCH MARKS
C.O.A. BENCHMARK "C-244" A.M.A.F.C.A. RIGHT OF WAY MARKER STAMPED "NAA-9" LOCATED IN THE SOUTHEAST QUADRANT OF THE INTERSECTION OF PASEO DEL NORTE AND THE NORTH DIVERSION CHANNEL. ELEV. = 5069.27 ft
GROUND COORDINATES: NORTHING = 1,519,215.25 EASTING = 394,264.97

SURVEY INFORMATION
FIELD NOTES

NO.	BY	DATE
11599	STEPHEN J. TOLER FROM SURVEYING CONTROL, INC.	05/00

ENGINEERS SEAL
NEW MEXICO PATRICK J. CONLEY 10141 PROFESSIONAL ENGINEER
6/6/04

NO.	DATE	REMARKS	BY
		REVISIONS	
		DESIGN	

		DATE
DESIGNED BY	PJC	06/04
DRAWN BY	CAD	06/04
CHECKED BY	PJC	06/04

100101B
Smith Engineering Company
A Full Service Engineering Company
6400 Uptown Boulevard, N.E. Suite 500E Albuquerque, New Mexico 87110

CITY OF ALBUQUERQUE
PUBLIC WORKS DEPARTMENT
ENGINEERING DEVELOPMENT GROUP

TITLE: DOMINGO BACA ARROYO - NORTH DIVERSION CHANNEL TO WASHINGTON ST.

TYPICAL HALF CHANNEL CROSS SECTION

Design Review Committee: JUL - 6 2006 DESIGN REVIEW COMMITTEE
City Engineer Approval: JUL - 9 2006 CITY ENGINEER
Last Design Update
No. / Day / Yr. | No. / Day / Yr.

City Project No.	Zone Map No.	Sheet	Of
6258.92	C-17-Z	9	14

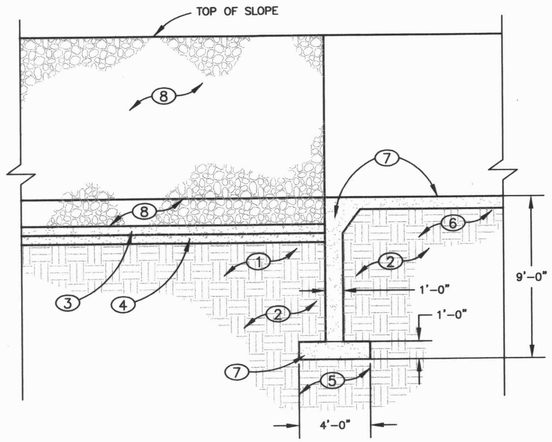

SECTION: CUT-OFF WALL AT END OF CHANNEL

1/4" = 1'-0"

1 / 4 10

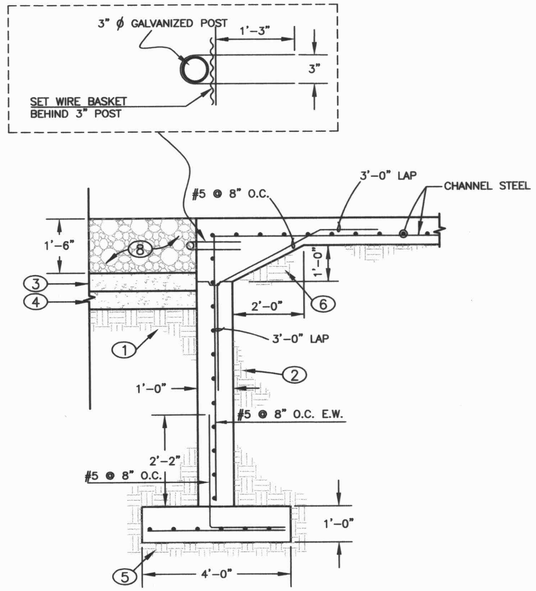

DETAIL: CUT-OFF WALL FOR OUTFALL

N.T.S.

A / 10 10

KEYED NOTES:

1. 12" SUBGRADE COMPACTED TO 90% ASTM D-1557.
2. BACKFILL COMPACTED TO 90% ASTM D-1557.
3. 6" TYPE II BEDDING MATERIAL. COMPACTED TO 95% ASTM D-1557.
4. 6" TYPE I BEDDING MATERIAL. COMPACTED TO 95% ASTM D-1557.
5. 24" STRUCTURAL FILL COMPACTED TO 95% ASTM D-1557 UNDER FOOTING.
6. SUBGRADE PREPARATION PER C.O.A. STD. SPECIFICATIONS FOR RPCC CHANNEL.
7. SEE DETAIL A/10 FOR REINFORCING IN CUT-OFF WALL.
8. 1'-6" STAKED RIP-RAP PER COA STD. DWG. 2270.

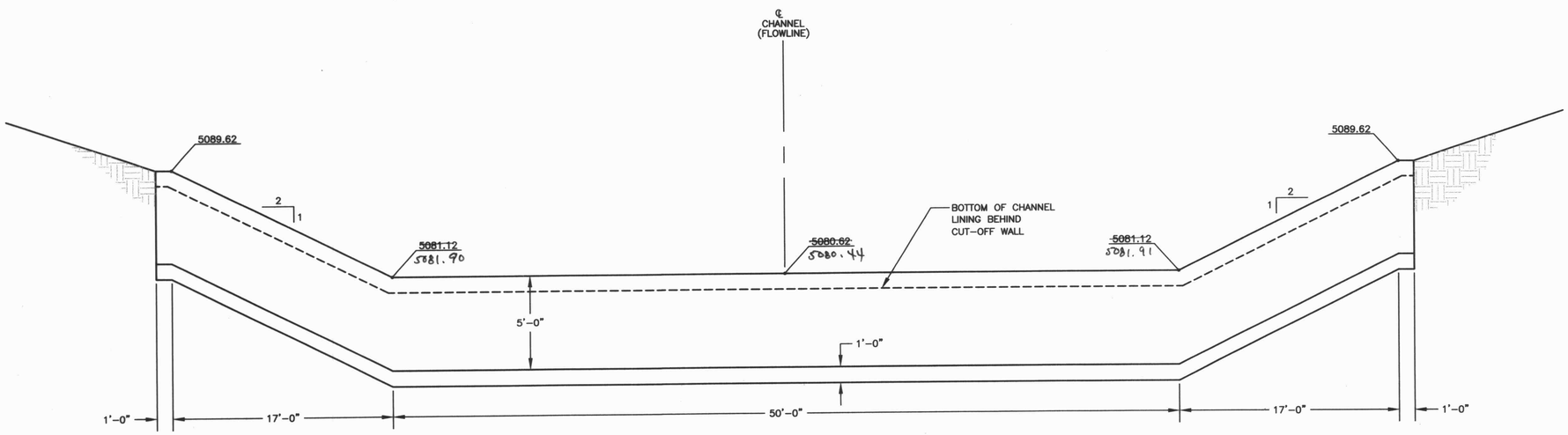

ELEVATION OF CUT-OFF WALL AT END OF CHANNEL

1/4" = 1'-0"

AS BUILT INFORMATION

CONTRACTOR A.S. Hubbard

WORK STAKED BY	DSC	DATE 1/05
WORK INSPECTED BY	DSC	DATE 1/05
ACCEPTANCE BY	SEC	DATE 1/05
FIELD VERIFICATION BY	SEC	DATE 7/05
DRAWINGS CORRECTED BY	CTAS	DATE 3/05

MICRO-FILM INFORMATION

RECORDED BY	DATE
NO.	

BENCH MARKS

C.O.A. BENCHMARK "C-244" A.M.A.F.C.A. RIGHT OF WAY MARKER STAMPED "NAA-9" LOCATED IN THE SOUTHEAST QUADRANT OF THE INTERSECTION OF PASEO DEL NORTE AND THE NORTH DIVERSION CHANNEL. ELEV. = 5069.27 ft.

GROUND COORDINATES: NORTHING = 1,519,215.25 EASTING = 394,264.97

SURVEY INFORMATION

FIELD NOTES

NO.	BY	DATE
11599	STEPHEN J. TOLER FROM SURVEYING CONTROL, INC.	05/00

ENGINEERS SEAL

PATRICK J. CONLEY NEW MEXICO (10141) PROFESSIONAL ENGINEER 7/6/04

NO.	DATE	REMARKS	BY
		REVISIONS	

DESIGN

		DATE
DESIGNED BY	PJC	06/04
DRAWN BY	CAD	06/04
CHECKED BY	PJC	06/04

100101B

Smith Engineering Company
A Full Service Engineering Company
6400 Uptown Boulevard, N.E. Suite 600E Albuquerque, New Mexico 87110

CITY OF ALBUQUERQUE
PUBLIC WORKS DEPARTMENT
ENGINEERING DEVELOPMENT GROUP

TITLE: DOMINGO BACA ARROYO - NORTH DIVERSION CHANNEL TO WASHINGTON ST.

OUTFALL DETAILS & SECTIONS

Design Review Committee	City Engineer Approval	Last Design Update	No. / Day / Yr.	No. / Day / Yr.
APPROVED JUL -8 2004 DESIGN REVIEW COMMITTEE	APPROVED JUL -8 2004 CITY ENGINEER			

City Project No.	Zone Map No.	Sheet	Of
6258.92	C-17-Z	10	14

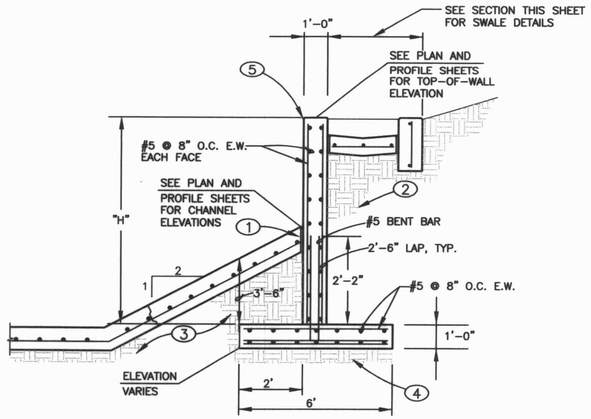

NOTE: SEE SCHEDULE THIS SHEET FOR STATION, "A", AND "B" DIMENSIONS

TYPICAL SECTION AT 8' TO 10' HIGH RETAINING WALLS FOR TRANSITIONS

NTS

2 | 8 | 11

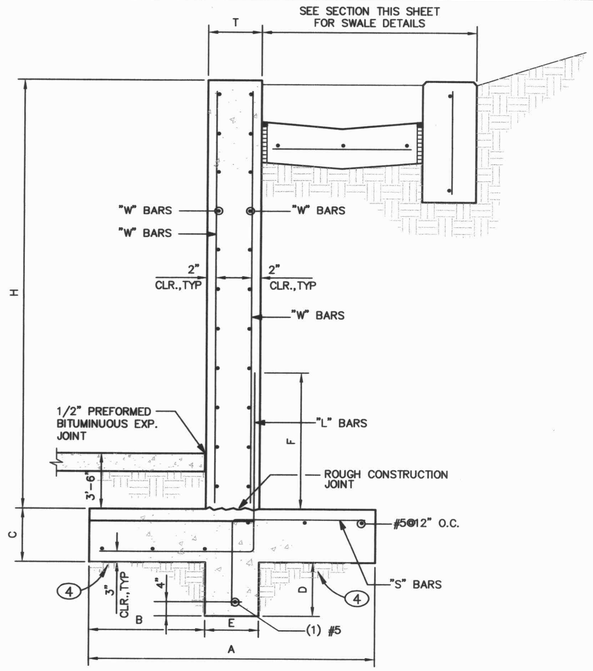

TYPICAL WALL REINFORCING DETAIL FOR 1'-6" WIDE WALL

SCALE: 1/2" = 1'-0"

1 | 8 | 11

TABLE OF DIMENSIONS

T	A	B	C	D	E	F
1'-6"	12'-0"	4'-6"	1'-2"	3'-0"	1'-0"	5'-0"
1'-6"	7'-6"	2'-6"	1'-0"	1'-0"	1'-0"	3'-0"

TABLE OF REINFORCING

TYPE	"L" BARS	"S" BARS	"W" BARS
"A"	#8@12" O.C.	#7@12" O.C.	#7@12" O.C.
"B"	#7@16"O.C.	#5@16"O.C.	#5@16"O.C.
"C"	#4@16"O.C.	#4@16"O.C.	#4@16"O.C.

KEYED NOTES:

1. 3/4" EXPANSION JOINT PER DETAIL A/11.
2. BACKFILL COMPACTED TO 90% ASTM D-1557.
3. SUBGRADE FOR CHANNEL PER SHEET 9/14.
4. 36" STRUCTURAL FILL COMPACTED TO 95% ASTM D-1557 OVER 12" SUBGRADE COMPACTED TO 90% ASTM D-1557.
5. 3/4" CHAMFER, TYPICAL.
6. 1/2" EXPANSION JOINT PER DETAIL G, COA STD. DWG. 2426.
7. 12" SUBGRADE COMPACTED TO 95% ASTM D-1557.
8. 8"x1'-6" STANDING CURB WITH REINFORCING AS SHOWN. 3/4" CHAMFER OR 1/2" RADIUS ALONG TOP EDGE.
9. 1/2" SEALANT AT CONSTRUCTION JOINT.
10. 2' WIDE SWALE OUTSIDE EDGE THICKNESS=6" INVERT THICKNESS=6". SEE PLANS FOR FLOWLINE DATA.
11. BACKFILL COMPACTED TO 90% ASTM D-1557.
12. SAWCUT TO EXPOSE REBAR; APPLY EPOXY BONDER TO EXPOSED CONCRETE PER 602.5.6 OF C.O.A. STD. SPECS PRIOR TO POUR.
13. NOT USED.
14. 3/4" POLYETHYLENE FOAM FILLER "PLASTAZONE" OR APPROVED EQUIVALENT.
15. 1" TWO COMPONENT URETHANE SEALANT WITH PRIMER.
16. CONTRACTOR SHALL FILL VERTICAL SCORES IN EXISTING WALL WITH 5000 PSI GROUT PRIOR TO PLACEMENT OF EXPANSION JOINT MATERIAL.

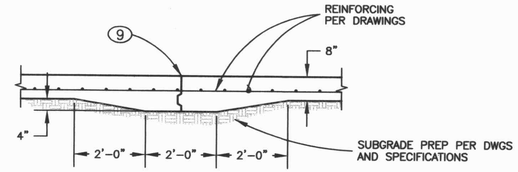

CONSTRUCTION JOINT DETAIL

1/2" = 1'-0"

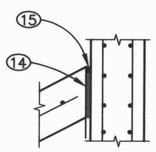

3/4" TYPICAL EXPANSION JOINT AT RETAINING WALLS

1" = 1'-0"

A | 8 | 11

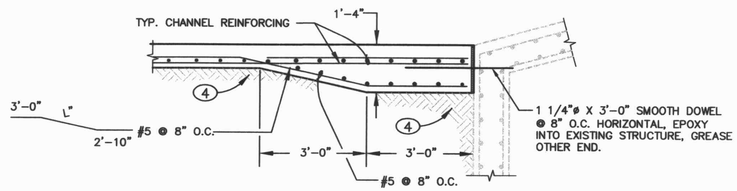

SECTION: CHANNEL CONNECTION AT WASHINGTON STREET

1/2" = 1'-0"

B | 8 | 11

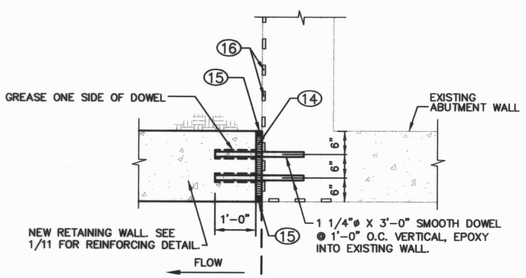

PLAN VIEW: RETAINING/ABUTMENT WALL JOINT DETAIL

SCALE: N.T.S.

C | 8 | 11

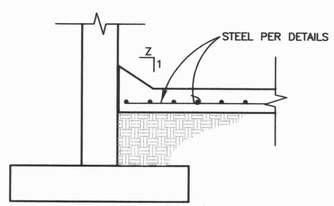

EDGE DETAIL

NTS

D | 8 | 11

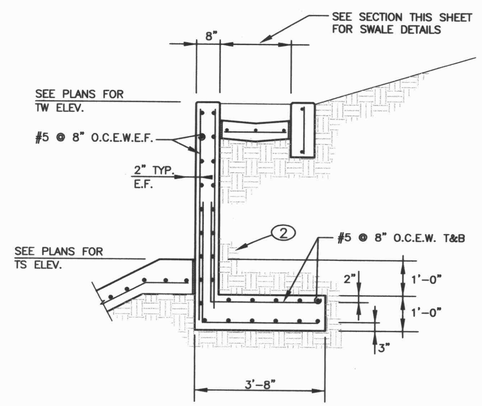

SECTION: 8" RETAINING WALL STATION 19+00 TO 21+40

1/2" = 1'-0"

E | 6 | 11

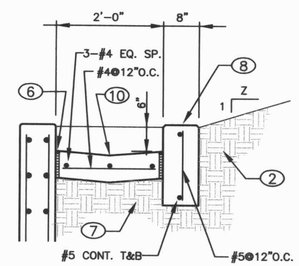

LOW FLOW SWALE

NTS

AS BUILT INFORMATION
CONTRACTOR A.S. Hoffmer DATE 1/05
WORK STAKED BY BDM DATE 2/05
INSPECTOR'S ACCEPTANCE BY SEC DATE 3/05
FIELD VERIFICATION BY SEC DATE 3/05
DRAWINGS CORRECTED BY HJS DATE 8/05
MICRO-FILM INFORMATION
RECORDED BY DATE
NO.

BENCH MARKS
C.O.A. BENCHMARK "C-244" A.M.A.F.C.A. RIGHT OF WAY MARKER STAMPED "NAA-9" LOCATED IN THE SOUTHEAST QUADRANT OF THE INTERSECTION OF PASEO DEL NORTE AND THE NORTH DIVERSION CHANNEL. ELEV. = 5069.27 ft
GROUND COORDINATES: NORTHING = 1,519,215.25 EASTING = 394,264.97

SURVEY INFORMATION
FIELD NOTES

NO.	BY	DATE
11599	STEPHEN J. TOLER FROM SURVEYING CONTROL, INC.	05/00

ENGINEERS SEAL
PATRICK J. CONLEY NEW MEXICO 10141 LICENSED PROFESSIONAL ENGINEER
7/6/05

NO.	DATE	REMARKS	BY
		REVISIONS	

DESIGN
DESIGNED BY PJC DATE 06/04
DRAWN BY CAD DATE 06/04
CHECKED BY PJC DATE 06/04

100101B
Smith Engineering Company
A Full Service Engineering Company
6400 Uptown Boulevard, N.E. Suite 500E Albuquerque, New Mexico 87110

CITY OF ALBUQUERQUE
PUBLIC WORKS DEPARTMENT
ENGINEERING DEVELOPMENT GROUP

TITLE: DOMINGO BACA ARROYO - NORTH DIVERSION CHANNEL TO WASHINGTON ST.

STRUCTURAL SHEET #1

Design Review Committee: APPROVED JUL - 8 2005 DESIGN REVIEW COMMITTEE
City Engineer Approval: APPROVED JUL - 8 2005 CITY ENGINEER
Last Design Update | No. / Day / Yr. | No. / Day / Yr.

City Project No.	Zone Map No.	Sheet	Of
6258.92	C-17-Z	11	14

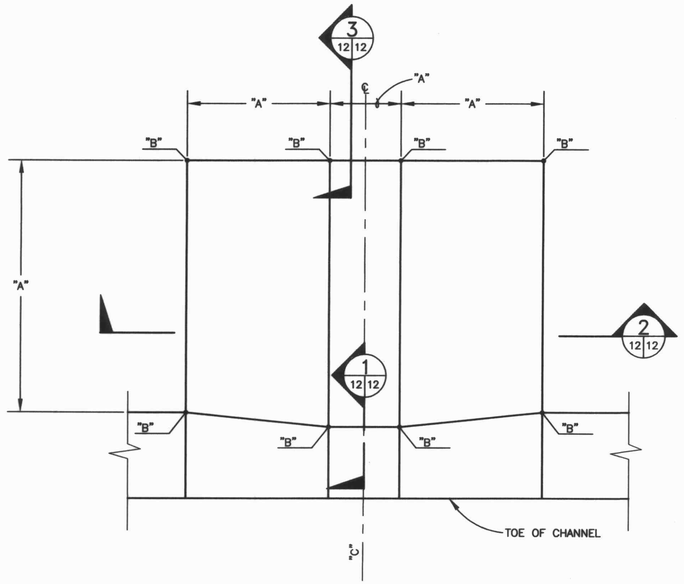

PLAN VIEW: TYPICAL RUNDOWN

N.T.S.

"A" – SEE PLANS FOR DIMENSIONS
"B" – SEE PLANS FOR GRADE
"C" – SEE PLANS FOR STATION OF RUNDOWN

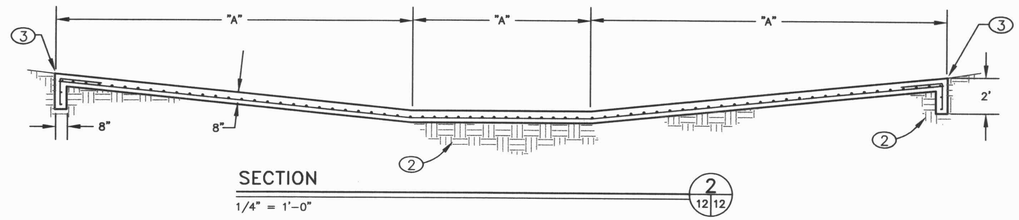

SECTION

1/4" = 1'-0"

2 (12 12)

KEYED NOTES:

1. BACKFILL COMPACTED TO 90% ASTM D-1557.
2. 12" SUBGRADE COMPACTED TO 95% ASTM D-1557.
3. 3/4" CHAMFER OR 1/2" TOOLED EDGE TYPICAL AT ALL EXPOSED EDGES.

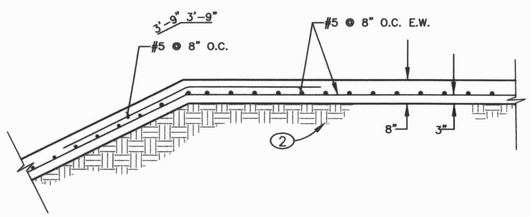

SECTION

1/2" = 1'-0"

1 (12 12)

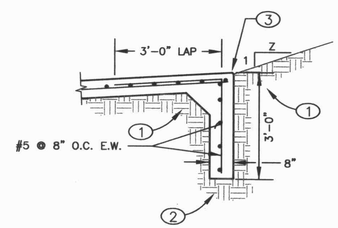

SECTION

1/2" = 1'-0"

3 (12 12)

AS BUILT INFORMATION
CONTRACTOR A.S. Horton
WORK STAKED BY RPM DATE 1/05
INSPECTOR ACCEPTANCE BY SEC DATE 5/05
FIELD VERIFICATION BY FEC DATE 3/05
DRAWINGS CORRECTED BY JLK DATE 3/05
MICRO-FILM INFORMATION
RECORDED BY DATE
NO.

BENCH MARKS
C.O.A. BENCHMARK "C-244" A.M.A.F.C.A. RIGHT OF WAY MARKER STAMPED "NAA-9" LOCATED IN THE SOUTHEAST QUADRANT OF THE INTERSECTION OF PASEO DEL NORTE AND THE NORTH DIVERSION CHANNEL. ELEV. = 5069.27 ft
GROUND COORDINATES: NORTHING = 1,519,215.25 EASTING = 394,284.97

SURVEY INFORMATION
FIELD NOTES

NO.	BY	DATE
11599	STEPHEN J. TOLER	05/00
	FROM SURVEYING	
	CONTROL, INC.	

ENGINEERS SEAL
NEW MEXICO PATRICK J. CONLEY LICENSED PROFESSIONAL ENGINEER 10141
7/6/04

NO.	DATE	REMARKS	BY
		REVISIONS	

DESIGN

		DATE
DESIGNED BY	PJC	06/04
DRAWN BY	CAD	06/04
CHECKED BY	PJC	06/04

100101B
Smith Engineering Company
A Full Service Engineering Company
6400 Uptown Boulevard, N.E. Suite 500E Albuquerque, New Mexico 87110

CITY OF ALBUQUERQUE
PUBLIC WORKS DEPARTMENT
ENGINEERING DEVELOPMENT GROUP

TITLE: DOMINGO BACA ARROYO - NORTH DIVERSION CHANNEL TO WASHINGTON ST.

STRUCTURAL SHEET #2

Design Review Committee: APPROVED DRC CHAIRPERSON
City Engineer Approval: APPROVED JUL 8 2004 CITY ENGINEER
Last Design Update
No. / Day / Yr. | No. / Day / Yr.

City Project No.	Zone Map No.	Sheet	Of
6258.92	C-17-Z	12	14

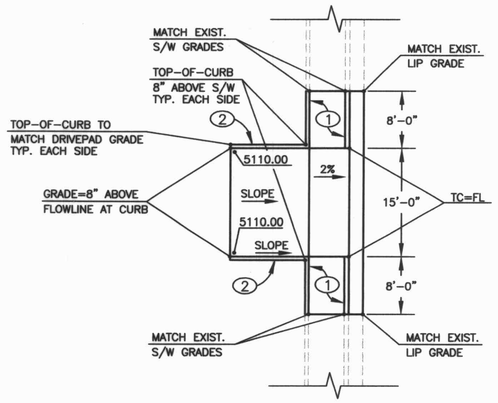

TYPICAL DRIVEPAD DETAIL (A 7/13)

1" = 10'

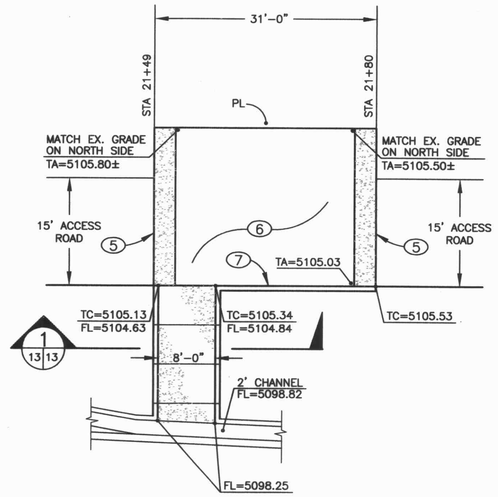

RUNDOWN DETAIL: STA 21+80 (1/13 13)

1" = 10'

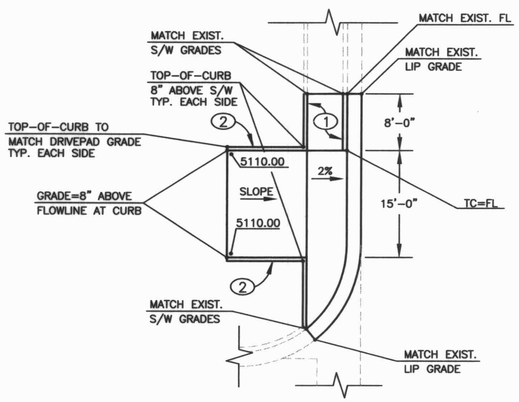

DRIVEPAD DETAIL: SW QUAD OF WASHINGTON ST. (B 7/13)

1" = 10'

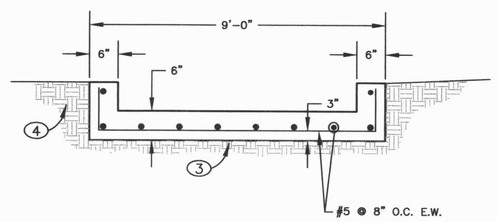

SECTION (1/13 13)

N.T.S.

KEYED NOTES:

1. 2% CROSS SLOPE TOWARDS STREET. LONGITUDINAL SLOPE NO STEEPER THAN 1:12 (V:H). MAXIMUM WIDTH VARIES DEPENDING ON LOCATION. PLACE 5' WIDTH AT LOCATIONS WHERE NO SIDEWALK EXISTS.
2. 6" WIDE HEADER CURB. PLACE 1/2" EXPANSION JOINT BETWEEN HEADER CURB AND DRIVEPAD.
3. 12" SUBGRADE AT 95% ASTM D-1557.
4. BACKFILL PER COA SPECIFICATIONS.
5. CONSTRUCT MOUNTABLE CURB PER COA STD DWG 2415A.
6. ~~ASPHALT PAVING: 3" TYPE "A" ARTERIAL OVER 12" SUBGRADE AT 95% ASTM D-1557~~
7. CONSTRUCT MEDIAN W/ 2% SLOPE IN PAN TOWARDS FACE.

6. 8" REINFORCED CONCRETE

AS BUILT INFORMATION
CONTRACTOR A.S. HOLMES
WORK STAKED BY BDM DATE 1/05
INSPECTORS ACCEPTANCE BY SFC DATE 3/05
VERIFICATION BY SFC DATE 3/05
CORRECTED BY JLK DATE 3/05
MICRO-FILM INFORMATION
RECORDED BY DATE
NO.

BENCH MARKS
C.O.A. BENCHMARK "C-244" A.M.A.F.C.A. RIGHT OF WAY MARKER STAMPED "NAA-9" LOCATED IN THE SOUTHEAST QUADRANT OF THE INTERSECTION OF PASEO DEL NORTE AND THE NORTH DIVERSION CHANNEL. ELEV. = 5069.27 ft.
GROUND COORDINATES: NORTHING = 1,519,215.25 EASTING = 394,264.97

SURVEY INFORMATION
FIELD NOTES

NO.	BY	DATE
11599	STEPHEN J. TOLER FROM SURVEYING CONTROL, INC.	05/00

ENGINEERS SEAL
PATRICK J. CONLEY NEW MEXICO 10141 LICENSED PROFESSIONAL ENGINEER
7/6/04

REVISIONS

NO.	DATE	REMARKS	BY

		DATE
DESIGNED BY	PJC	06/04
DRAWN BY	CAD	06/04
CHECKED BY	PJC	06/04

100101B
Smith Engineering Company
A Full Service Engineering Company
5971 Uptown Boulevard, N.E. Suite 202B Albuquerque, New Mexico 87110

CITY OF ALBUQUERQUE
PUBLIC WORKS DEPARTMENT
ENGINEERING DEVELOPMENT GROUP

TITLE: DOMINGO BACA ARROYO - NORTH DIVERSION CHANNEL TO WASHINGTON ST.

MISCELLANEOUS DETAILS & SECTIONS #1

Design Review Committee: APPROVED 6 JAN DESIGN REVIEW COMMITTEE
City Engineer Approval: CITY ENGINEER
Last Design Update | No. / Day / Yr. | No. / Day / Yr.

City Project No.	Zone Map No.	Sheet	Of
6258.92	C-17-Z	13	14

KEYED NOTES:

1. SAWCUT EXISTING RCP AT SPECIFIED STATION TO CONSTRUCT COLLAR.
2. 24" SUBGRADE COMPACTED TO 95% ASTM D-1557.
3. AFTER CONSTRUCTION OF COLLAR, FILL 3" GAP WITH 6000 PSI EPOXY GROUT. FINISH SMOOTH TO MATCH INTERIOR FINISH OF PIPE.
4. GAP NOT TO EXCEED 3".

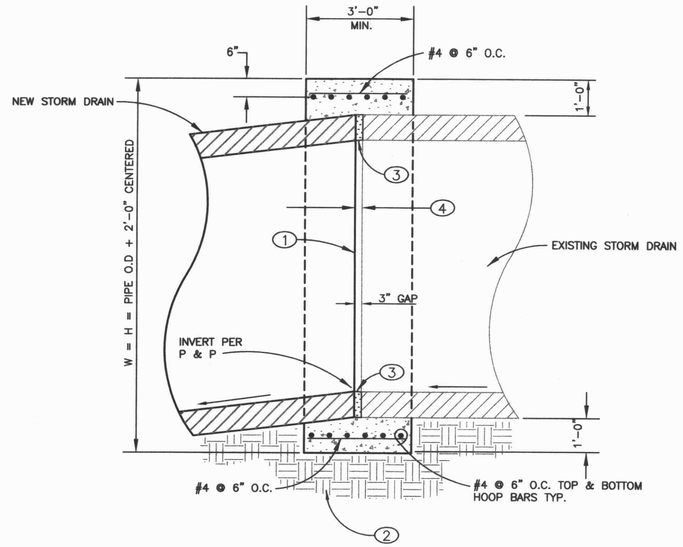

RPCC COLLAR DETAIL (B / 4 14)

NTS

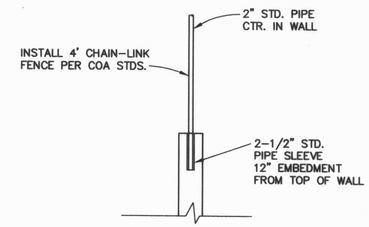

CHAIN LINK FENCE MOUNTING DETAIL (C / 6 14)

N.T.S.

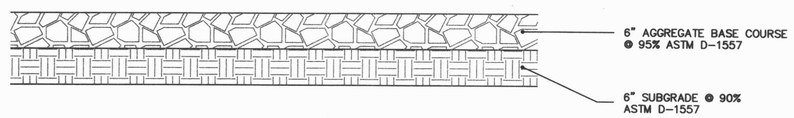

TYPICAL MAINTENANCE ROAD SECTION DETAIL (D / 2-7 14)

1" = 1'-0"

AS BUILT INFORMATION
CONTRACTOR A.S. Hoque
WORK STAKED BY BDM DATE 1/05
INSPECTOR'S ACCEPTANCE BY SEL DATE 3/05
VERIFICATION BY SEL DATE 3/05
DRAWINGS CORRECTED BY SJT DATE 3/05
MICRO-FILM INFORMATION
RECORDED BY DATE
NO.

BENCH MARKS
C.O.A. BENCHMARK "C-244" A.M.A.F.C.A. RIGHT OF WAY MARKER STAMPED "NAA-9" LOCATED IN THE SOUTHEAST QUADRANT OF THE INTERSECTION OF PASEO DEL NORTE AND THE NORTH DIVERSION CHANNEL. ELEV. = 5069.27 ft
GROUND COORDINATES: NORTHING = 1,519,215.25 EASTING = 394,264.97

SURVEY INFORMATION
FIELD NOTES

NO.	BY	DATE
11599	STEPHEN J. TOLER	05/00
	FROM SURVEYING CONTROL, INC.	

ENGINEERS SEAL
PATRICK J. CONLEY
NEW MEXICO
10141
PROFESSIONAL ENGINEER
7/6/05

NO.	DATE	REMARKS	BY

REVISIONS

DESIGN		DATE
DESIGNED BY	PJC	06/04
DRAWN BY	CAD	06/04
CHECKED BY	PJC	06/04

100101B
Smith Engineering Company
A Full Service Engineering Company
5650 Uptown Boulevard, N.E. Suite 205E Albuquerque, New Mexico 87110

CITY OF ALBUQUERQUE
PUBLIC WORKS DEPARTMENT
ENGINEERING DEVELOPMENT GROUP

TITLE: DOMINGO BACA ARROYO - NORTH DIVERSION CHANNEL TO WASHINGTON ST.

MISCELLANEOUS DETAILS & SECTIONS #2

Design Review Committee: APPROVED JUL - 8 2004 DESIGN REVIEW COMMITTEE
City Engineer Approval: APPROVED JUL - 8 2004 CITY ENGINEER
Last Design Update
No. / Day / Yr.
No. / Day / Yr.

City Project No.	Zone Map No.	Sheet	Of
6258.92	C-17-Z	14	14

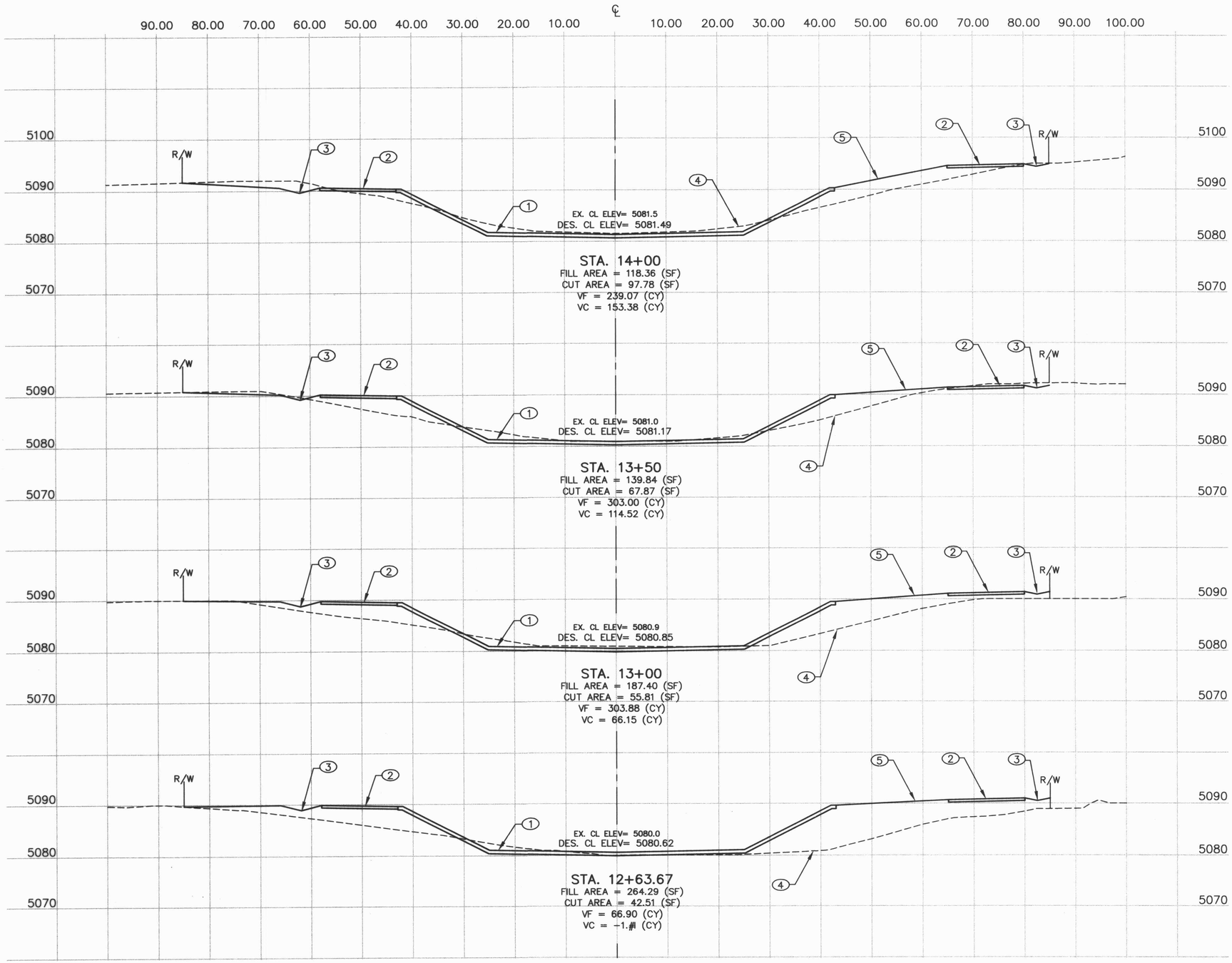

KEYED NOTES:

1. NEW RPCC CHANNEL
2. ACCESS ROAD
3. LOW FLOW SWALE
4. EXISTING GROUND
5. PROPOSED GRADE

CROSS SECTION SHOW APPROXIMATE CUT/FILL FOR PROPOSED IMPROVEMENTS. CONTRACTOR SHALL USE PLAN AND PROFILE AND APPROPRIATE DETAIL SHEETS TO CONSTRUCT CHANNEL.

AS BUILT INFORMATION
CONTRACTOR A.S. Horner
WORK STAKED BY RDK DATE 1/6
INSPECTOR ACCEPTANCE BY SEC DATE 3/6
FIELD VERIFICATION BY SEC DATE 3/6
DRAWINGS CORRECTED BY SWD DATE 7/6
MICRO-FILM INFORMATION
RECORDED BY DATE
NO.

BENCH MARKS
C.O.A. BENCHMARK "C-244" A.M.A.F.C.A. RIGHT OF WAY MARKER STAMPED "NAA-9" LOCATED IN THE SOUTHEAST QUADRANT OF THE INTERSECTION OF PASEO DEL NORTE AND THE NORTH DIVERSION CHANNEL. ELEV. = 5089.27 ft.
GROUND COORDINATES:
NORTHING = 1,519,215.25
EASTING = 394,264.97

SURVEY INFORMATION
FIELD NOTES

NO.	BY	DATE
11599	STEPHEN J. TOLER	05/00
	FROM SURVEYING	
	CONTROL, INC.	

ENGINEERS SEAL
PATRICK J. CONLEY NEW MEXICO (10141) LICENSED PROFESSIONAL ENGINEER
7/29/04

NO.	DATE	REMARKS	BY
		REVISIONS	

DESIGN

		DATE
DESIGNED BY	PJC	06/04
DRAWN BY	CAD	06/04
CHECKED BY	PJC	06/04

100101B
Smith Engineering Company
A Full Service Engineering Company
5400 Uptown Boulevard, N.E. Suite 5000 Albuquerque, New Mexico 87110

CITY OF ALBUQUERQUE
PUBLIC WORKS DEPARTMENT
ENGINEERING DEVELOPMENT GROUP

TITLE: DOMINGO BACA ARROYO - NORTH DIVERSION CHANNEL TO WASHINGTON ST.

CHANNEL CROSS-SECTIONS: STA. 12+63.67 TO 14+00

Design Review Committee	City Engineer Approval	Last Design Update	No. / Day / Yr.	No. / Day / Yr.

City Project No.	Zone Map No.	Sheet	Of
6258.92	C-17-Z	14A	14

ADDENDUM #1 7/29/04 PAGE 6

KEYED NOTES:

1. NEW RPCC CHANNEL
2. ACCESS ROAD
3. LOW FLOW SWALE
4. EXISTING GROUND
5. PROPOSED GRADE

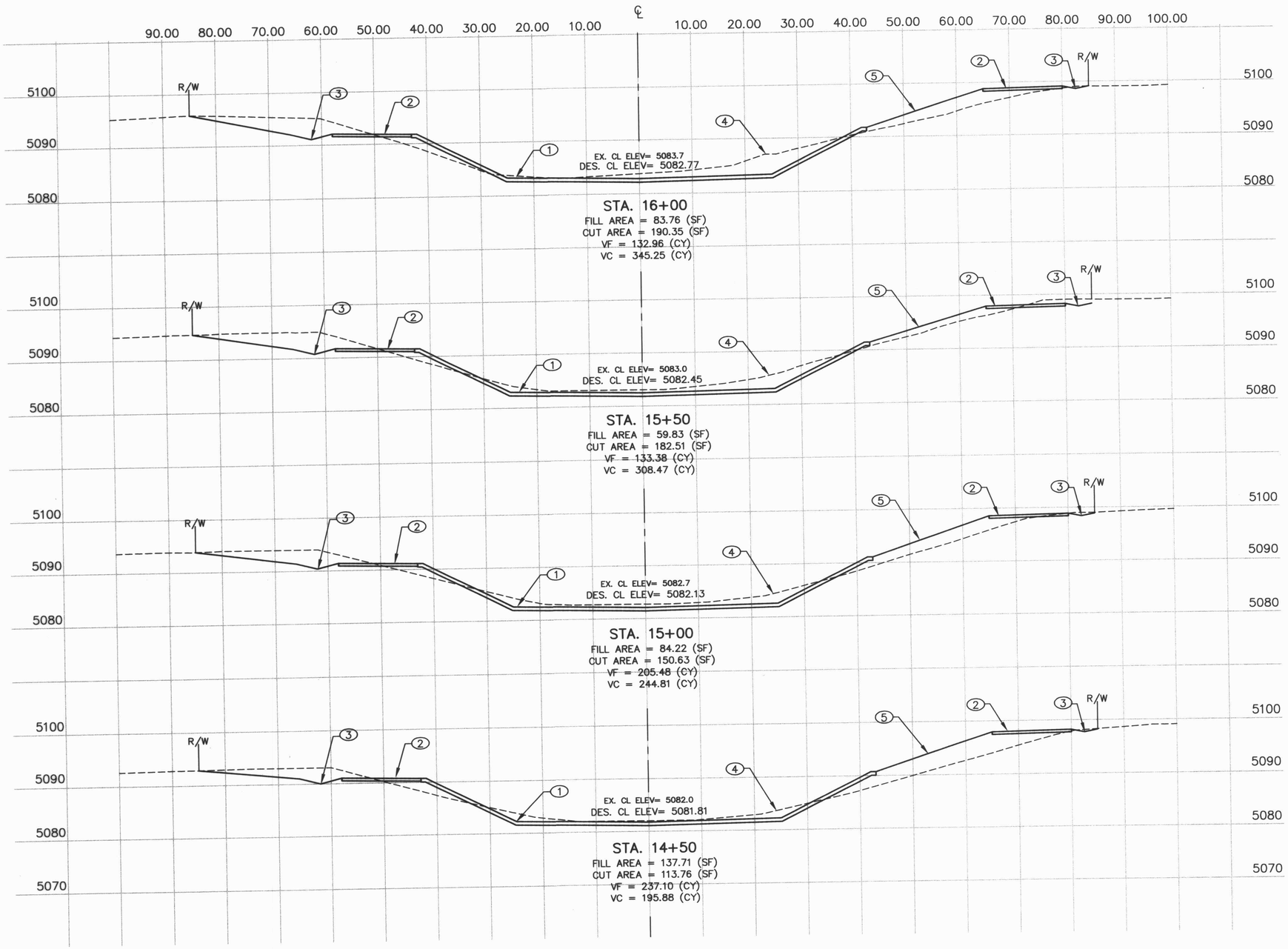

CROSS SECTION SHOW APPROXIMATE CUT/FILL FOR PROPOSED IMPROVEMENTS. CONTRACTOR SHALL USE PLAN AND PROFILE AND APPROPRIATE DETAIL SHEETS TO CONSTRUCT CHANNEL.

Vertical Scale: 1" = 5'

Horizontal Scale: 1"=20'

100101B

Smith Engineering Company
A Full Service Engineering Company
6400 Uptown Boulevard, N.E. Suite 600E Albuquerque, New Mexico 87110

CITY OF ALBUQUERQUE
PUBLIC WORKS DEPARTMENT
ENGINEERING DEVELOPMENT GROUP

TITLE: DOMINGO BACA ARROYO - NORTH DIVERSION CHANNEL TO WASHINGTON ST.

CHANNEL CROSS-SECTIONS: STA. 14+50 TO 16+00

Design Review Committee	City Engineer Approval	Last Design Update	No. / Day / Yr.	No. / Day / Yr.

City Project No.	Zone Map No.	Sheet	Of
6258.92	C-17-Z	14B	14

AS BUILT INFORMATION
CONTRACTOR A.S. Horner
WORK STAKED BY BDM DATE 1/01
WORK INSPECTED BY SEC DATE 1/01
ACCEPTANCE BY SEC DATE 1/01
FIELD VERIFICATION BY SEC DATE 1/01
DRAWINGS CORRECTED BY JLS DATE 2/01
MICRO-FILM INFORMATION
RECORDED BY DATE
NO.

BENCH MARKS
C.O.A. BENCHMARK "C-244" A.M.A.F.C.A. RIGHT OF WAY MARKER STAMPED "NAA-9" LOCATED IN THE SOUTHEAST QUADRANT OF THE INTERSECTION OF PASEO DEL NORTE AND THE NORTH DIVERSION CHANNEL. ELEV. = 5069.27 ft.
GROUND COORDINATES: NORTHING = 1,519,215.25 EASTING = 394,284.97

SURVEY INFORMATION
FIELD NOTES

NO.	BY	DATE
11599	STEPHEN J. TOLER	05/00
	FROM SURVEYING	
	CONTROL, INC.	

ENGINEERS SEAL
PATRICK J. CONLEY
NEW MEXICO
10141
LICENSED PROFESSIONAL ENGINEER
7/31/01

NO.	DATE	REMARKS	BY
		REVISIONS	

DESIGN

		DATE
DESIGNED BY	PJC	06/04
DRAWN BY	CAD	06/04
CHECKED BY	PJC	06/04

ADDENDUM #1 7/29/04 PAGE 7

KEYED NOTES:

1. NEW RPCC CHANNEL
2. ACCESS ROAD
3. LOW FLOW SWALE
4. EXISTING GROUND
5. PROPOSED GRADE

CROSS SECTION SHOW APPROXIMATE CUT/FILL FOR PROPOSED IMPROVEMENTS. CONTRACTOR SHALL USE PLAN AND PROFILE AND APPROPRIATE DETAIL SHEETS TO CONSTRUCT CHANNEL.

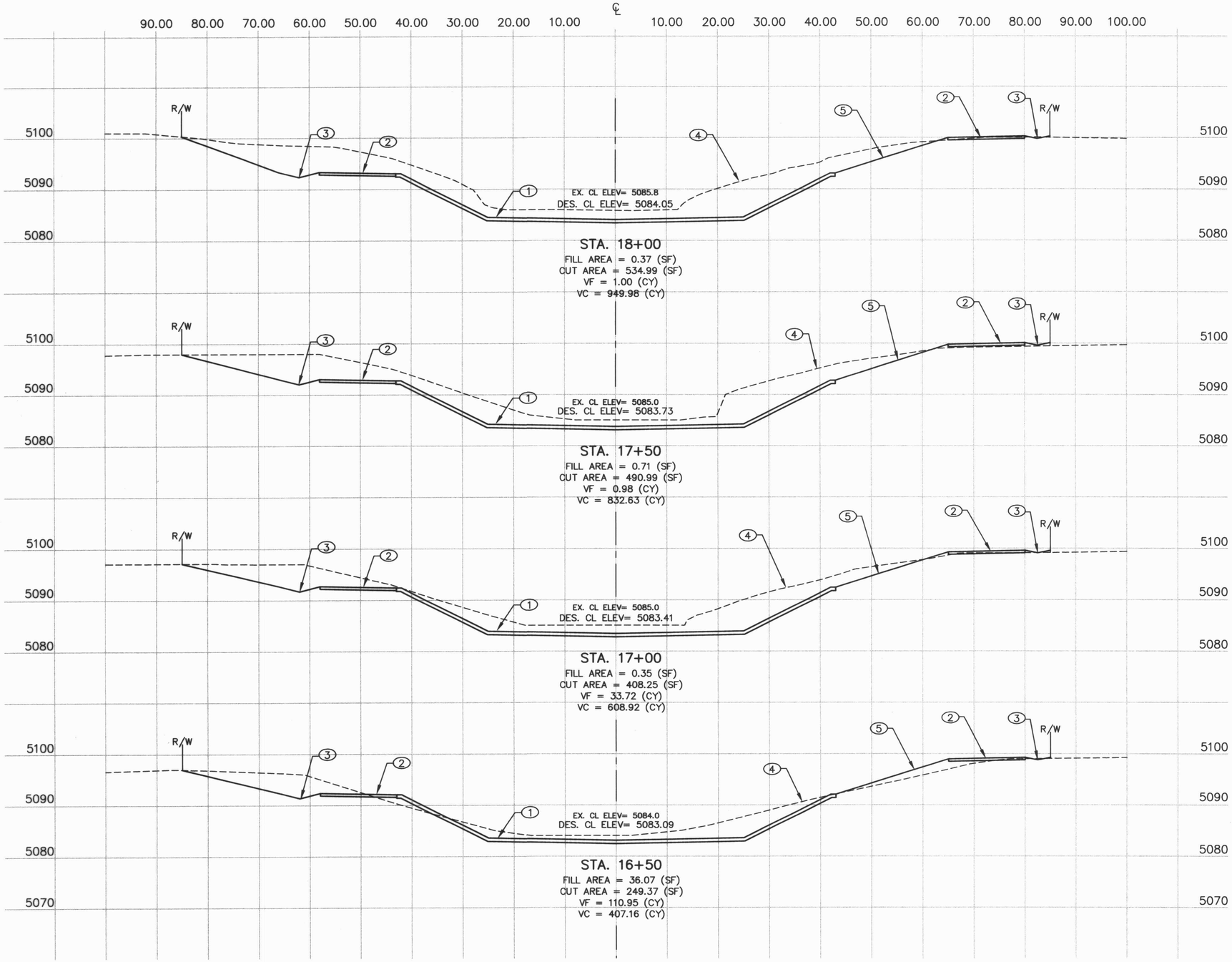

Vertical Scale: 1" = 5'

Horizontal Scale: 1"=20'

100101B

Smith Engineering Company
A Full Service Engineering Company
5400 Uptown Boulevard, N.E. Suite 500B Albuquerque, New Mexico 87110

CITY OF ALBUQUERQUE
PUBLIC WORKS DEPARTMENT
ENGINEERING DEVELOPMENT GROUP

TITLE: DOMINGO BACA ARROYO - NORTH DIVERSION CHANNEL TO WASHINGTON ST.

CHANNEL CROSS-SECTIONS: STA. 16+50 TO 18+00

Design Review Committee	City Engineer Approval	Last Design Update	No. / Day / Yr.	No. / Day / Yr.

City Project No.	Zone Map No.	Sheet	Of
6258.92	C-17-Z	14C	14

AS BUILT INFORMATION
CONTRACTOR A.S. Horner
WORK STAKED BY RDA DATE 1/01
INSPECTOR ACCEPTANCE BY SEC DATE 3/04
FIELD VERIFICATION BY SEC DATE 3/04
DRAWINGS CORRECTED BY TLT DATE 3/04
MICRO-FILM INFORMATION
RECORDED BY DATE
NO.

BENCH MARKS
C.O.A. BENCHMARK "C-244" A.M.A.F.C.A. RIGHT OF WAY MARKER STAMPED "NAA-9" LOCATED IN THE SOUTHEAST QUADRANT OF THE INTERSECTION OF PASEO DEL NORTE AND THE NORTH DIVERSION CHANNEL. ELEV. = 5069.27 ft
GROUND COORDINATES: NORTHING = 1,519,215.25 EASTING = 394,264.97

SURVEY INFORMATION
FIELD NOTES

NO.	BY	DATE
11599	STEPHEN J. TOLER FROM SURVEYING CONTROL, INC.	05/00

ENGINEERS SEAL
PATRICK J. CONLEY NEW MEXICO 10141 PROFESSIONAL ENGINEER
7/26/04

NO.	DATE	REMARKS	BY

REVISIONS
DESIGN

		DATE
DESIGNED BY	PJC	06/04
DRAWN BY	CAD	06/04
CHECKED BY	PJC	06/04

ADDENDUM #1 7/29/04 PAGE 8

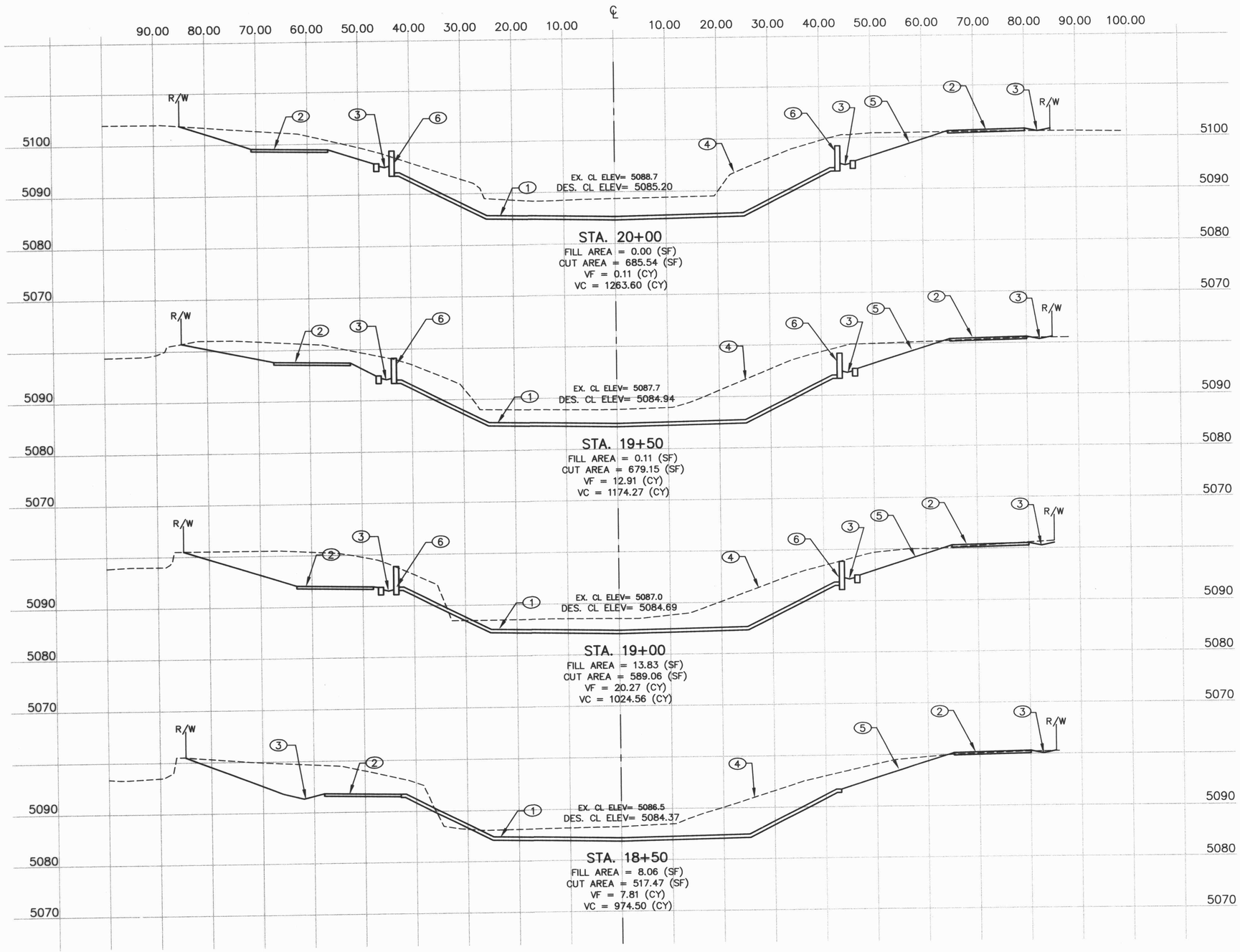

KEYED NOTES:

1. NEW RPCC CHANNEL
2. ACCESS ROAD
3. LOW FLOW SWALE
4. EXISTING GROUND
5. PROPOSED GRADE
6. PROPOSED RETAINING WALL. FOOTINGS NOT SHOWN FOR CLARITY.

CROSS SECTION SHOW APPROXIMATE CUT/FILL FOR PROPOSED IMPROVEMENTS. CONTRACTOR SHALL USE PLAN AND PROFILE AND APPROPRIATE DETAIL SHEETS TO CONSTRUCT CHANNEL.

Vertical Scale: 1" = 5'

Horizontal Scale: 1"=20'

100101B

Smith Engineering Company
A Full Service Engineering Company
6400 Uptown Boulevard, N.E. Suite 600E Albuquerque, New Mexico 87110

CITY OF ALBUQUERQUE
PUBLIC WORKS DEPARTMENT
ENGINEERING DEVELOPMENT GROUP

TITLE: DOMINGO BACA ARROYO - NORTH DIVERSION CHANNEL TO WASHINGTON ST.

CHANNEL CROSS-SECTIONS: STA. 18+50 TO 20+00

Design Review Committee	City Engineer Approval	Last Design Update	No. / Day / Yr.	No. / Day / Yr.

City Project No.	Zone Map No.	Sheet	Of
6258.92	C-17-Z	14D	14

AS BUILT INFORMATION
CONTRACTOR A.S. HAMPTON
WORK STAKED BY RDM DATE 1/01
INSPECTORS ACCEPTANCE BY SEC DATE 3/03
FIELD VERIFICATION BY SEC DATE 3/03
DRAWINGS CORRECTED BY JMR DATE 3/03
MICRO-FILM INFORMATION
RECORDED BY DATE
NO.

BENCH MARKS
C.O.A. BENCHMARK "C-244" A.M.A.F.C.A. RIGHT OF WAY MARKER STAMPED "NAA-9" LOCATED IN THE SOUTHEAST QUADRANT OF THE INTERSECTION OF PASEO DEL NORTE AND THE NORTH DIVERSION CHANNEL. ELEV. = 5089.27 ft.
GROUND COORDINATES: NORTHING = 1,519,215.25 EASTING = 394,264.97

SURVEY INFORMATION
FIELD NOTES

NO.	BY	DATE
11599	STEPHEN J. TOLER FROM SURVEYING CONTROL, INC.	05/00

ENGINEERS SEAL
REGISTERED PROFESSIONAL ENGINEER
PATRICK J. CONLEY
NEW MEXICO
10141
7/29/04

NO.	DATE	REMARKS	BY
		REVISIONS	

DESIGN

		DATE
DESIGNED BY	PJC	06/04
DRAWN BY	CAD	06/04
CHECKED BY	PJC	06/04

ADDENDUM #1 7/29/04 PAGE 9

KEYED NOTES:

1. NEW RPCC CHANNEL
2. ACCESS ROAD
3. LOW FLOW SWALE
4. EXISTING GROUND
5. PROPOSED GRADE
6. PROPOSED RETAINING WALL. FOOTINGS NOT SHOWN FOR CLARITY.

CROSS SECTION SHOW APPROXIMATE CUT/FILL FOR PROPOSED IMPROVEMENTS. CONTRACTOR SHALL USE PLAN AND PROFILE AND APPROPRIATE DETAIL SHEETS TO CONSTRUCT CHANNEL.

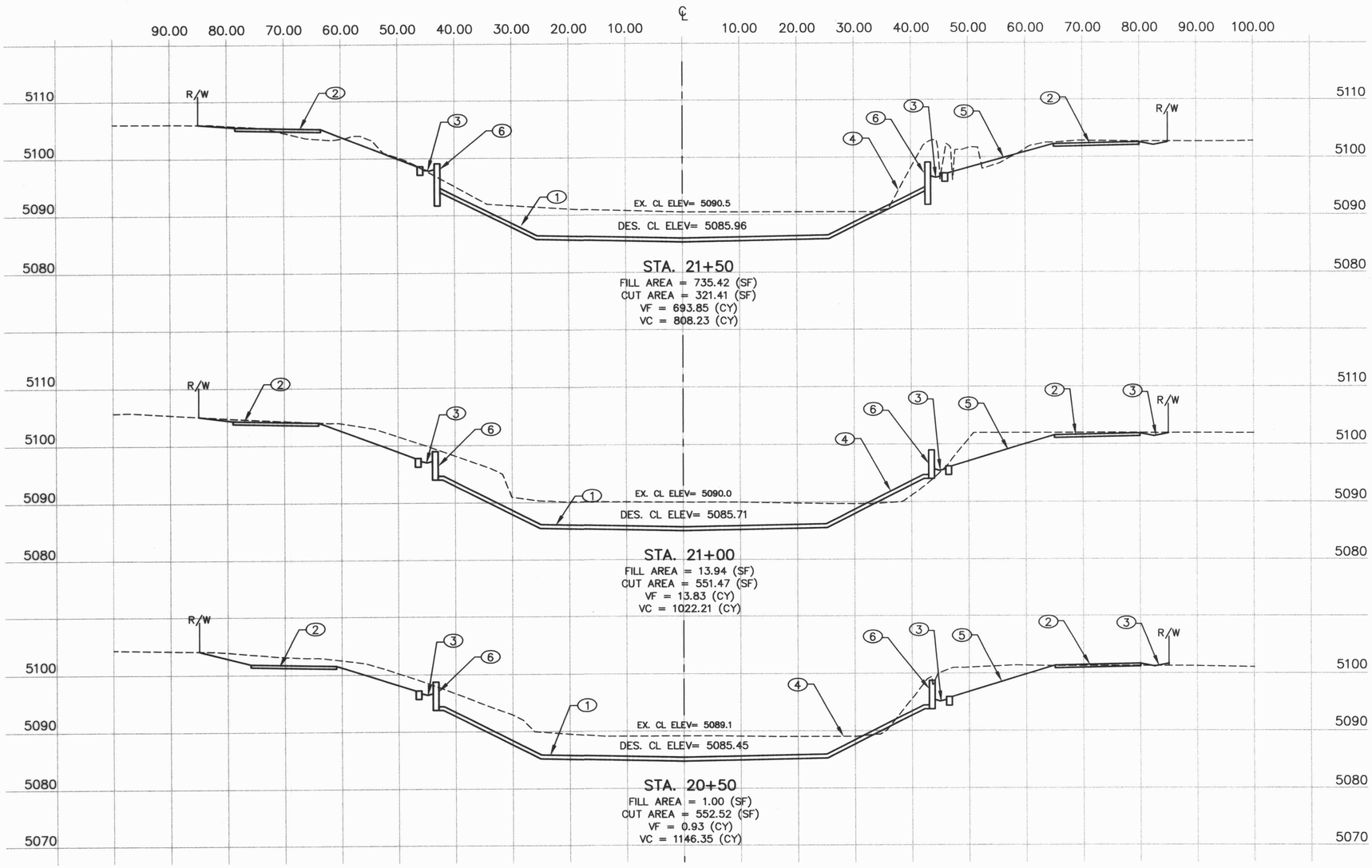

Vertical Scale: 1" = 5'

Horizontal Scale: 1"=20'

AS BUILT INFORMATION
CONTRACTOR AS-BUILTED BY
WORK INSPECTORS ACCEPTANCE BY — DATE 1/6
ACCEPTANCE BY — DATE 2/6
VERIFICATION BY — DATE 2/6
DRAWINGS CORRECTED BY — DATE 2/6
MICRO-FILM INFORMATION
RECORDED BY — DATE
NO.

BENCH MARKS
C.O.A. BENCHMARK "C-244" A.M.A.F.C.A. RIGHT OF WAY MARKER STAMPED "NAA-9" LOCATED IN THE SOUTHEAST QUADRANT OF THE INTERSECTION OF PASEO DEL NORTE AND THE NORTH DIVERSION CHANNEL. ELEV. = 5069.27 ft.
GROUND COORDINATES: NORTHING = 1,519,215.25 EASTING = 394,264.97

SURVEY INFORMATION
FIELD NOTES

NO.	BY	DATE
11599	STEPHEN J. TOLER	05/00
	FROM SURVEYING	
	CONTROL, INC.	

ENGINEERS SEAL
NEW MEXICO PATRICK J. CONLEY LICENSED PROFESSIONAL ENGINEER 10141
7/29/04

NO.	DATE	REMARKS	BY
		REVISIONS	
		DESIGN	

		DATE
DESIGNED BY	PJC	06/04
DRAWN BY	CAD	06/04
CHECKED BY	PJC	06/04

100101B
Smith Engineering Company
A Full Service Engineering Company
6400 Uptown Boulevard, N.E. Suite 500E Albuquerque, New Mexico 87110

CITY OF ALBUQUERQUE
PUBLIC WORKS DEPARTMENT
ENGINEERING DEVELOPMENT GROUP

TITLE: DOMINGO BACA ARROYO - NORTH DIVERSION CHANNEL TO WASHINGTON ST.

CHANNEL CROSS-SECTIONS: STA. 20+50 TO 21+50

Design Review Committee	City Engineer Approval	Last Design Update	No. / Day / Yr.	No. / Day / Yr.

City Project No.	Zone Map No.	Sheet	Of
6258.92	C-17-Z	14E	14

ADDENDUM #1 7/29/04 PAGE 10

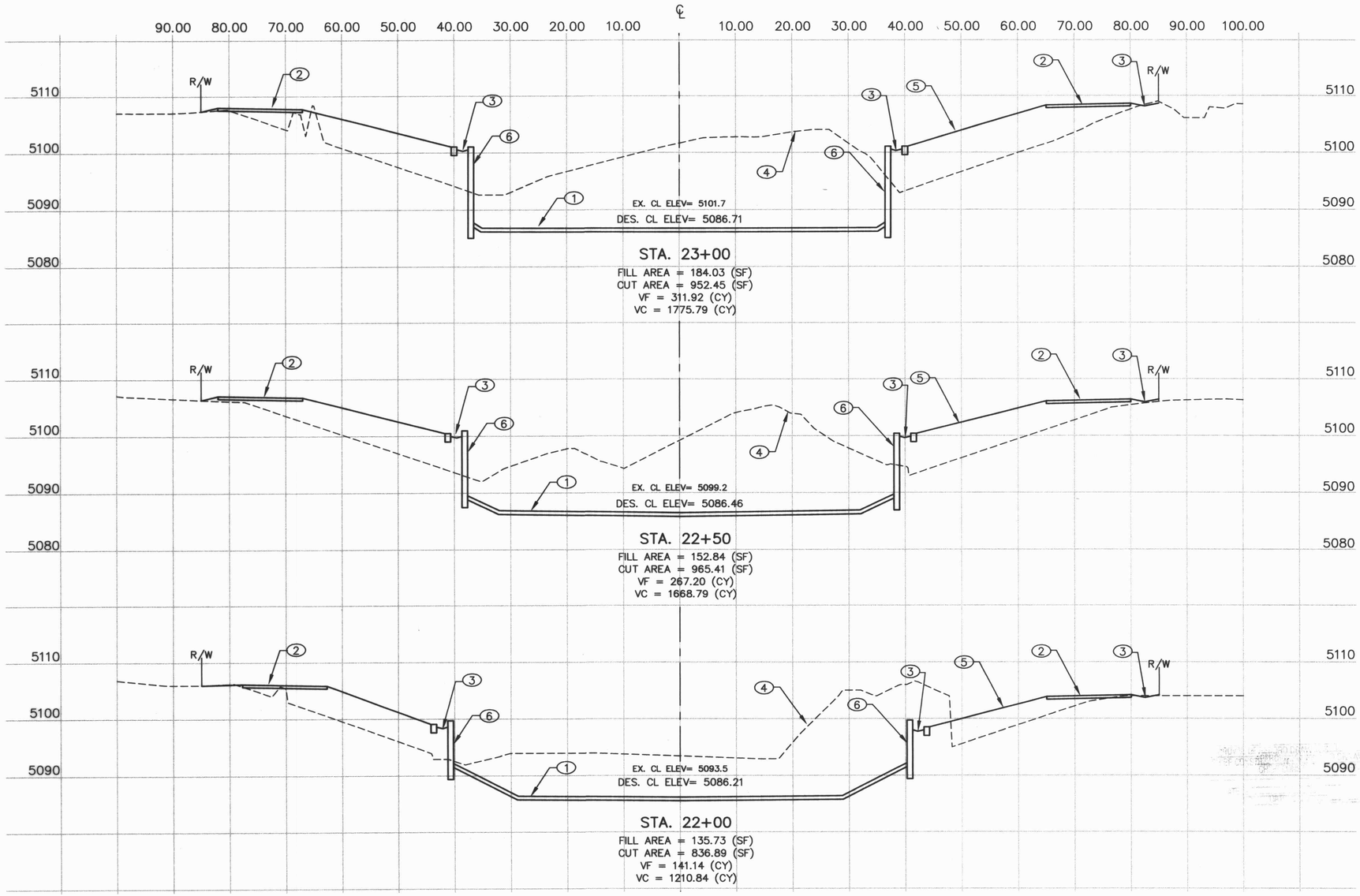

KEYED NOTES:

1. NEW RPCC CHANNEL
2. ACCESS ROAD
3. LOW FLOW SWALE
4. EXISTING GROUND
5. PROPOSED GRADE
6. PROPOSED RETAINING WALL. FOOTINGS NOT SHOWN FOR CLARITY.

CROSS SECTION SHOW APPROXIMATE CUT/FILL FOR PROPOSED IMPROVEMENTS. CONTRACTOR SHALL USE PLAN AND PROFILE AND APPROPRIATE DETAIL SHEETS TO CONSTRUCT CHANNEL.

Vertical Scale: 1" = 5'

Horizontal Scale: 1"=20'

100101B

Smith Engineering Company
A Full Service Engineering Company
6400 Uptown Boulevard, N.E. Suite 600E Albuquerque, New Mexico 87110

CITY OF ALBUQUERQUE
PUBLIC WORKS DEPARTMENT
ENGINEERING DEVELOPMENT GROUP

TITLE: DOMINGO BACA ARROYO - NORTH DIVERSION CHANNEL TO WASHINGTON ST.

CHANNEL CROSS-SECTIONS: STA. 22+00 TO 23+00

Design Review Committee	City Engineer Approval	Last Design Update	No. / Day / Yr.	No. / Day / Yr.

City Project No.	Zone Map No.	Sheet	Of
6258.92	C-17-Z	14F	14

AS BUILT INFORMATION
CONTRACTOR A.S. HOLMES
WORK STAKED BY SDM DATE 1/06
INSPECTORS ACCEPTANCE BY SEC DATE 3/6
FIELD VERIFICATION BY SEC DATE 3/6
DRAWINGS CORRECTED BY JLM DATE 3/6
MICRO-FILM INFORMATION
RECORDED BY DATE
NO.

BENCH MARKS
C.O.A. BENCHMARK "C-244" A.M.A.F.C.A. RIGHT OF WAY MARKER STAMPED "NAA-9" LOCATED IN THE SOUTHEAST QUADRANT OF THE INTERSECTION OF PASEO DEL NORTE AND THE NORTH DIVERSION CHANNEL. ELEV. = 5089.27 ft.
GROUND COORDINATES: NORTHING = 1,519,215.25 EASTING = 394,264.97

SURVEY INFORMATION
FIELD NOTES

NO.	BY	DATE
11599	STEPHEN J. TOLER	05/00
	FROM SURVEYING	
	CONTROL, INC.	

ENGINEERS SEAL
PATRICK J. CONLEY
NEW MEXICO
10141
PROFESSIONAL ENGINEER
LICENSED
7/29/04

NO.	DATE	REMARKS	BY

REVISIONS

		DATE
DESIGNED BY	PJC	06/04
DRAWN BY	CAD	06/04
CHECKED BY	PJC	06/04

ADDENDUM #1 7/29/04 PAGE 11