BERNALILLO COUNTY OF NEW MEXICO
PUBLIC WORKS DIVISION
TECHNICAL SERVICES DEPARTMENT

BERNALILLO COUNTY PUBLIC WORKS

STATE OF NEW MEXICO

CONSTRUCTION PLANS FOR

PAJARITO AREA VACUUM STATION (PHASE III)

2701A DON FELIPE ROAD SW

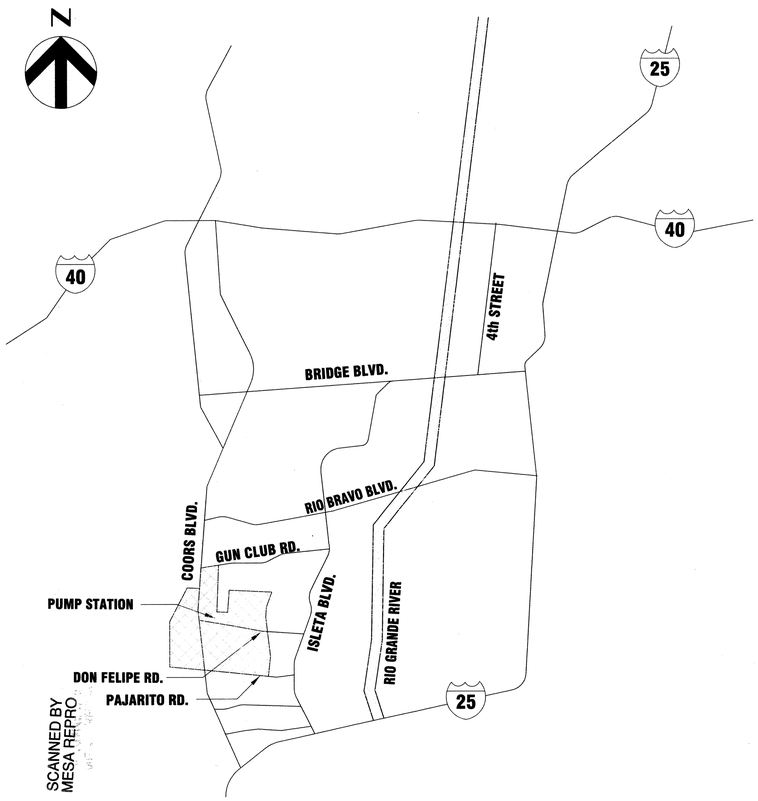

"AS RECORDED"
From Information provided by the contractors
By [signature] Date 9/2/03

INDEX OF DRAWING SHEETS

APPROVAL OF RECORD DRAWINGS
for CHIEF CONSTRUCTION ENGINEER
[signature]
DATE 9-18-03

DRB# 1000930

HDR
HDR Engineering, Inc.

REV.	SHEETS	CITY ENGINEER	DATE	USER DEPARTMENT	DATE	USER DEPARTMENT	DATE

ENGINEERS STAMP & SIGNATURE	APPROVALS	ENGINEER	DATE	APPROVED FOR CONSTRUCTION
WILLIAM F. ZIMMERMAN NEW MEXICO 8051 REGISTERED PROFESSIONAL ENGINEER [signature] 10/02	DRC Chairman	[signature]	9-11-02	[signature] PE 9-4-02 COUNTY ENGINEER DATE
	Transportation			
	Water/Wastewater	[signature]	8-15-02	
	Hydrology			
	Parks			
	Const. Mngmt.			[signature] 9-12-02 CITY ENGINEER DATE
	Record Drawing			

HDR PROJECT MANAGER	PROJECT NO.	SHEET
WILLIAM F. ZIMMERMAN	TS – 01 – 13 COA – 647291	1 OF 25

PAJARITO AREA VACUUM SEWER PROJECT

ALBUQUERQUE, NEW MEXICO

PAJARITO AREA VACUUM STATION

SOLICITATION NO. : DACW47-02-R0003
DATED : APRIL 09, 2002

United States Army
Corps of Engineers
...Serving the Army
...Serving the Nation

Albuquerque District

Zero Accidents
Zero Tolerance

SIGNATURES AFFIXED BELOW INDICATE OFFICIAL RECOMMENDATION AND APPROVAL OF ALL DRAWINGS IN THIS SET AS INDEXED.

SUBMITTED:	APPROVED:
PE CHIEF, DESIGN BRANCH	FOR PE CHIEF, ENGINEERING AND PLANNING DIVISION

THIS PROJECT WAS DESIGNED BY THE ALBUQUERQUE DISTRICT OF THE U.S. ARMY CORPS OF ENGINEERS. THE INITIALS OR SIGNATURES AND REGISTRATION DESIGNATIONS OF INDIVIDUALS APPEAR ON THESE PROJECT DOCUMENTS WITHIN THE SCOPE OF THEIR EMPLOYMENT AS REQUIRED BY ER 1110-1-8152.

COA #647291

Sheet 1A

MISCELLANEOUS

NOTIFY APS AND PAJARITO ELEMENTARY SCHOOL PRINCIPAL AS TO CONSTRUCTION SCHEDULE.

CONTRACTOR MUST TAKE CARE IN THE SAFETY OF PEDESTRIAN TRAFFIC TO THE ELEMENTARY SCHOOL.

WATER LINE ON APS PROPERTY SHALL BE CONSTRUCTED DURING THE SUMMER SCHOOL BREAK.

THE CONTRACTOR SHALL NOTIFY THE BERNALILLO COUNTY PUBLIC WORKS DIVISION TRAFFIC CONTROL MANAGER, FIRE DEPARTMENT AND SHERIFF'S DEPARTMENT IN WRITING A MINIMUM OF FIVE (5) WORKING DAYS PIOR TO ANY STREET CLOSURES AND PRIOR TO ANY WORK WITHIN COUNTY RIGHT-OF-WAY.

PRIOR TO CONSTRUCTION, THE CONTRACTOR SHALL EXCAVATE AND VERIFY THE HORIZONTAL AND VERTICAL LOCATIONS OF ALL OBSTRUCTIONS. SHOULD A CONFLICT EXIST, THE CONTRACTOR SHALL NOTIFY THE ENGINEER SO THAT THE CONFLICT CAN BE RESOLVED WITH A MINIMUM AMOUNT OF DELAY.

THE CONTRACTOR SHALL PROVIDE CONSTRUCTION STAKING FROM BASELINES, GRADES AND BENCH MARKS SHOWN ON THE PLANS, OR AS DETERMINED IN THE FIELD BY THE ENGINEER. REESTABLISHMENT OF LOST, MISSING, OR DISTURBED REFERENCE POINTS SHALL BE PERFORMED BY THE ENGINEER AT THE CONTRACTOR'S EXPENSE.

THE CONTRACTOR SHALL BE RESPONSIBLE FOR MAINTAINING ALL TRENCHES IN A SAFE CONDITION.

THE CONTRACTOR SHALL COORDINATE HIS CONSTRUCTION ACTIVITIES WITH ALL OTHER CONTRACTORS AND UTILITY COMPANIES WORKING IN THE SAME AREA. THE CONTRACTOR MAY BE REQUIRED TO RESCHEDULE ACTIVITIES TO ALLOW UTILITY CREWS TO PERFORM THEIR REQUIRED WORK. NO ADDITIONAL COMPENSATION WILL BE ALLOWED FOR DELAYS OR INCONVENIENCE CAUSED BY UTILITY WORK CREWS.

LIMIT CONSTRUCTION ACTIVITIES TO WITHIN PERMANENT AND CONSTRUCTION EASEMENTS ON PRIVATE PROPERTY SHOWN ON DRAWINGS.

THE CONTRACTOR IS RESPONSIBLE FOR REMOVAL AND DISPOSAL OF ALL DEMOLITION DEBRIS. SALVAGE OF ANY MATERIAL SHALL BE IDENTIFIED BY THE ENGINEER. WORK MATERIALS SHALL BE DISPOSED OF IN APPROVED WASTE AREAS SECURED BY AND AT THE EXPENSE OF THE CONTRACTOR.

PROJECT SIGN SHALL BE ERECTED, AND SHALL BE LOCATED AT THE SOUTHWEST CORNER OF THE SITE FACING SOUTH. SEE SPECIFICATIONS FOR SIGN REQUIREMENTS BY EPA.

UTILITIES

A MINIMUM OF TWO (2) WORKING DAYS, BUT NOT MORE THAN TWENTY (20) WORKING DAYS PRIOR TO ANY EXCAVATION AT A PARTICULAR LOCATION, THE CONTRACTOR MUST CONTACT N.M. ONE-CALL SYSTEM, 260-1990, FOR LOCATION OF EXISTING UTILITIES.

IN ADVANCE OF CONSTRUCTION OPERATIONS, THE CONTRACTOR SHALL BE RESPONSIBLE FOR DETERMINING WHETHER OVERHEAD UTILITY LINES, SUPPORT STRUCTURES, POLES, GUYS, ETC., ARE AN OBSTRUCTION TO CONSTRUCTION OPERATIONS. IF ANY OBSTRUCTION TO CONSTRUCTION OPERATIONS IS EVIDENT, THE CONTRACTOR SHALL BE RESPONSIBLE FOR COORDINATION.

ALL WATER VALVE BOXES AND SEWER MANHHOLES WITHIN PAVEMENT AREAS ARE TO BE ADJUSTED TO FINISH GRADE PER C.O.A. STANDARD DETAILS. THIS WORK WILL BE CONSIDERED INCIDENTAL TO CONTRUCTION.

THE CONTRACTOR SHALL COORDINATE ANY WATER VALVE SHUT-OFF OPERATION WITH THE WATER SYSTEMS DIVISION (857-8200) NOT LESS THAN THREE (3) WORKING DAYS PRIOR TO INITIATING ANY WORK AFFECTING EXISTING WATER UTILITIES. WATER SERVICE SHALL BE MAINTAINED TO ALL CUSTOMERS DURING CONSTRUCTION.

CONTRACTOR IS TO SUPPORT AND MAINTAIN THE INTEGRITY OF ALL UNDERGROUND TELEPHONE, ELECTRIC, AND CABLE TELEVISION UTILITIES AT NO ADDITIONAL COST TO THE OWNER. EXPOSED CABLE IS TO BE SUPPORTED EVERY 15' (MIN.) CONTRACTOR SHALL COORDINATE WITH AND MAKE NECESSARY PAYMENT (IF ANY) TO UTILITY OWNER FOR DE-ENERGIZATION OF CABLES OR SUPPORT OF CABLES BY THE UTILITY OWNER. COST FOR SAID WORK WILL BE CONSIDERED INCIDENTAL TO ALL OTHER COSTS.

THE CONTRACTOR SHALL SUPPORT AND MAINTAIN THE INTEGRITY OF ALL GAS LINES. NO ADDITIONAL PAYMENT WILL BE MADE FOR THIS WORK. GAS LINES THAT MUST BE RELOCATED ARE TO BE COORDINATED WITH THE UTILITY OWNER FOR RELOCATION AND WILL BE CONSIDERED INCIDENTAL TO ALL OTHER COSTS.

ALL ABANDONED UTILITY LINES THAT ARE EXPOSED AS AS A RESULT OF CONSTRUCTION SHALL BE REMOVED AND DISPOSED OF BY THE CONTRACTOR. THIS WORK SHALL BE CONSIDERED INCIDENTAL TO THE PROJECT.

ALL TEMPORARY WATERLINE AND TEMPORARY CAPPING AND BLOCKING OF EXISTING WATERLINE REQUIRED FOR THE INSTALLATION OF ANY TEMPORARY WATERLINE SHALL BE CONSIDERED INCIDENTAL TO THE PROJECT.

VACUUM MAIN LOCATIONS SHOWN ON THE PLANS ARE BEING CONSTRUCTED IN A SEPARATE CONTRACT. COORDINATE WITH OTHER CONTRACTORS FOR FINAL LOCATION.

DESIGN CRITERIA:

DESIGN SHALL BE ACCORDING TO THE 1997 UNIFORM BUILDING CODE

DESIGN LIVE LOADS –

ROOF OVER STAIRS	20 PSF
MAIN ROOF	20 PSF
DESIGN DEAD LOADS –	20 PSF(EXCLUDING PRECAST HOLLOW CORE SLAB UNITS)

GEOTECHNICAL:
GEOTECHNICAL INFORMATION BASED UPON REPORT BY AMEC EARTH & ENVIRONMENTAL REPORT # D-517-000161 DATED 17 JANUARY 2001

WIND LOADS:
WIND LOADS BASED UPON BASIC SPEED OF 80 MPH

SEISMIC DESIGN:
SEISMIC DESIGN BASED UPON SEISMIC ZONE 2B
IMPORTANCE FACTOR IS 1.15

GENERAL

1. DESIGN IS IN ACCORDANCE WITH THE 1997 EDITION OF THE UNIFORM BUILDING CODE AND ITS LATEST SUPPLEMENTS, EXCEPT WHERE OTHER APPLICABLE CODES OR THE FOLLOWING NOTES ARE MORE RESTRICTIVE.
2. CONSTRUCTION SHALL BE AS INDICATED IN THE APPLICABLE TYPICAL DETAILS AND GENERAL NOTES. TYPICAL DETAILS ARE MEANT TO APPLY EVEN THOUGH NOT REFERENCED AT SPECIFIC LOCATIONS OR IN SPECIFIC DRAWINGS.
3. STRUCTURAL DIMENSIONS AND PENETRATIONS CONTROLLED BY OR RELATED TO MECHANICAL OR ELECTRICAL EQUIPMENT SHALL BE VERIFIED BY THE CONTRACTOR PRIOR TO CONSTRUCTION.
4. MECHANICAL AND ELECTRICAL EQUIPMENT SUPPORTS, ANCHORAGES, OPENINGS, RECESSES AND REVEALS NOT SHOWN ON THE STRUCTURAL DRAWINGS BUT REQUIRED BY OTHER CONTRACT DRAWINGS SHALL BE PROVIDED AND VERIFIED BY CONTRACTOR PRIOR TO PLACING CONCRETE.
5. STRUCTURAL DRAWINGS SHALL BE USED IN COORDINATION WITH MECHANICAL, ELECTRICAL, ARCHITECTURAL, CIVIL DRAWINGS AND SHOP DRAWINGS PROVIDED BY MANUFACTURERS OF EQUIPMENT.
6. STRUCTURES HAVE BEEN DESIGNED FOR OPERATIONAL LOADS ON THE COMPLETED STRUCTURES. DURING CONSTRUCTION, THE STRUCTURES SHALL BE PROTECTED BY BRACING AND BALANCING WHEREVER EXCESSIVE CONSTRUCTION LOADS MAY OCCUR.
7. HANDRAILS, STAIRS AND LADDERS SHALL CONFORM TO LATEST OSHA REQUIREMENTS.
8. WATERSTOPS TO BE 6" WIDE x 3/8" THICK BULB TYPE GREENSTREAK PLASTIC PRODUCTS STYLE #705, OR GREENSTREAK LOCKSTOP, STYLE #595 AS INDICATED BY THE PLANS AND DETAILS, UNLESS NOTED OTHERWISE.

FOUNDATION AND SLAB ON GRADE

1. SEE MECHANICAL AND ELECTRICAL DRAWINGS FOR SLEEVES AND OPENINGS IN FOUNDATION AND SLAB.
2. NO BACKFILL SHALL BE PLACED AGAINST ANY STRUCTURE WALL, UNTIL THE WALL HAS REACHED FULL STRENGTH AND THE PERMANENT HOLLOW CORE SLAB UNITS ARE SECURED IN PLACE.

CONCRETE

1. ALL STRUCTURAL CONCRETE SHALL DEVELOP A MINIMUM COMPRESSIVE STRENGTH OF 4000 PSI IN 28 DAYS. UNLESS OTHERWISE NOTED, ALL CONCRETE CONSTRUCTION, INCLUDING BENDING OF BARS, SHALL COMPLY WITH A.C.I. "BUILDING CODE REQUIREMENTS FOR STRUCTURAL CONCRETE" (A.C.I. 318-99) AND CURRENT CRSI STANDARDS.
2. LOCATION OF ALL CONSTRUCTION JOINTS AND CONTROL JOINTS SHALL BE AS SHOWN ON THE DRAWINGS OR APPROVED BY THE ENGINEER. CONSTRUCTION JOINTS SHALL BE THOROUGHLY CLEANED FOR BOND. PROVIDE WATERSTOP AT ALL CONSTRUCTION JOINTS IN WATER BEARING SLABS AND WALLS.
3. REINFORCEMENT STEEL SHALL BE DEFORMED BARS CONFORMING IN QUALITY TO THE REQUIREMENT OF THE SPECIFICATIONS FOR DEFORMED BILLET-STEEL BARS FOR CONCRETE REINFORCEMENT, ASTM DESIGNATION A615, GRADE 60.
4. UNLESS SHOWN OTHERWISE, ALL DOWELS SHALL BE SAME SIZE AND SPACING AS THE REINFORCEMENT WHICH IS TO BE SPLICED TO THE DOWELS. DOWELS SHALL BE FIRMLY HELD IN POSITION.
5. SEE ARCHITECTURAL, MECHANICAL AND ELECTRICAL DRAWINGS FOR EMBEDDED ITEMS AND OPENINGS NOT SHOWN ON STRUCTURAL DRAWINGS.
6. PLACE TWO BARS MATCHING TYPICAL SECTION REINFORCING FOR E.F. AS REQUIRED AROUND PENETRATIONS IN CONCRETE WALLS. EXTEND BARS BEYOND OPENING. SEE DETAIL THIS SHEET.
7. CONCRETE COVER AND REINFORCEMENT SHALL BE AS INDICATED ON DRAWINGS. IF NOT INDICATED, THE FOLLOWING SHALL GOVERN:
   A. SURFACES NOT EXPOSED DIRECTLY TO GROUND, WEATHER OR WATER AFTER FORM REMOVAL 1-1/2"
   B. CONCRETE PLACED DIRECTLY AGAINST GROUND 3"
   C. SURFACES EXPOSED TO GROUND, WEATHER OR WATER AFTER FORM REMOVAL 2"
8. THE REINFORCING BARS FOR ALL SLABS, BEAMS AND COLUMNS SHALL HAVE A MINIMUM EXTENSION OR ANCHORAGE INTO SUPPORTS IN ACCORDANCE WITH A.C.I. CODE (318-99).
9. BARS SUPPORTS AND SPACERS SHALL BE PROVIDED IN ACCORDANCE WITH A.C.I. CODE.
10. REINFORCING BARS AND ACCESSORIES SHALL NOT BE IN CONTACT WITH ANY PIPE, PIPE FLANGE OR METAL PARTS EMBEDDED IN CONCRETE. A MINIMUM OF 2 INCHES CLEARANCE SHALL BE PROVIDED AT ALL TIMES.
11. STIRRUP SUPPORT BARS SHALL BE PROVIDED BETWEEN ENDS OF TOP BARS AS REQUIRED.
12. ALL STEEL EMBEDDED ITEMS SHALL BE HOT DIP GALVANIZED UNLESS NOTED OTHERWISE.
13. ALL DETAILING, FABRICATION AND PLACING OF REINFORCING BARS, UNLESS OTHERWISE NOTED, SHALL BE IN ACCORDANCE WITH THE MANUAL OF STANDARD PRACTICE FOR DETAILING REINFORCED CONCRETE STRUCTURES A.C.I.-315 LATEST EDITION.

MASONRY

1. CONCRETE MASONRY UNITS SHALL CONFORM TO ASTM C-90 GRADE N-1 . ALL CELLS CONTAINING HORIZONTAL OR VERTICAL REINFORCING BARS SHALL BE GROUTED SOLID.
2. ASSEMBLED MASONRY SHALL HAVE A MINIMUM f'm = 1500 psi .
3. ALL CONCRETE BLOCKS SHALL BE LAID IN RUNNING BOND UNLESS OTHERWISE SHOWN
4. ALL REINFORCING BARS SHALL BE CONTINUOUS UNLESS OTHERWISE SHOWN. LAP BARS 48 DIAMETERS AT SPLICES UNLESS A GREATER SPLICE IS NOTED. STAGGER SPLICES WHERE POSSIBLE.
5. WALL REINFORCEMENT SHALL BE PLACED AND GROUTED AS REQUIRED IN THE SPECIFICATIONS. UNLESS OTHERWISE SHOWN ON PLANS, ALL WALLS SHALL BE REINFORCED WITH A MINIMUM REINFORCING AS FOLLOWS:
   12" WALLS – #6 AT 24" VERT.,
   2- #5 IN BOND BEAMS
   8" WALLS – #5 AT 48" O.C. VERT.,
   2- #5 IN BOND BEAMS
6. ALL VERTICAL REINFORCING SHALL BE SPLICED TO THE FOOTING DOWELS. A VERTICAL BAR SHALL BE PLACED AT ALL WALL CORNERS AND WALL INTERSECTIONS. PROVIDE VERTICAL BARS ON EACH SIDE OF WALL OPENINGS TO MATCH TYP. VERTICAL WALL REINFORCING.
7. UNLESS OTHERWISE NOTED, ALL DOWELS SHALL BE THE SAME SIZE AS WALL REINFORCEMENT AND SHALL LAP 48 DIAMETERS AND EXTEND INTO THE FOOTING A MINIMUM OF 24 DIAMETERS, OR EXTEND INTO THE FOOTING A MINIMUM OF 12 DIAMETERS AND HAVE A STANDARD HOOK.
8. THE BARS IN HORIZONTAL LAP SPLICES SHALL BE ALIGNED VERTICALLY AND TIED. STAGGER SPLICES.
9. ALL OPENINGS SHALL HAVE A BOND BEAM AT THE TOP AND BOTTOM REINFORCED PER LINTEL SCHEDULE, SHEET S-06. REINFORCEMENT SHALL EXTEND 36" BEYOND WALL OPENINGS.
10. ALL WALLS SHALL HAVE 9 GA. STD HORIZONTAL JOINT REINFORCING @ 16" O.C. UNLESS AT BOND BEAM COURSES.

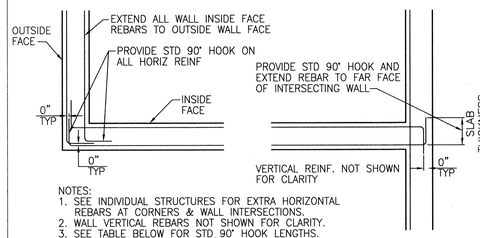

NOTES:
1. SEE INDIVIDUAL STRUCTURES FOR EXTRA HORIZONTAL REBARS AT CORNERS & WALL INTERSECTIONS.
2. WALL VERTICAL REBARS NOT SHOWN FOR CLARITY.
3. SEE TABLE BELOW FOR STD 90° HOOK LENGTHS.

PLAN "A" WALL CORNER

PLAN "B" WALL INTERSECTION

TYPICAL WALL HORIZ. REINF. DETAILS

SCALE: NOT TO SCALE

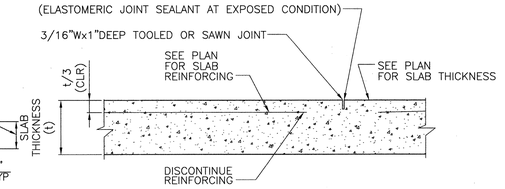

TYPICAL CONTROL JOINT

SCALE: NOT TO SCALE

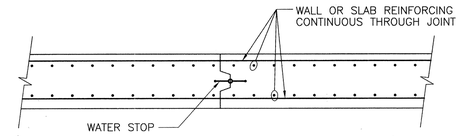

PERMISSABLE CONSTRUCTION JOINT IN WALL OR SLAB

SCALE: NOT TO SCALE

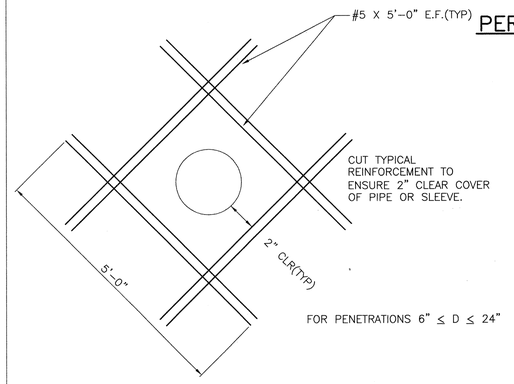

TYPICAL CONCRETE WALL PENETRATION

SCALE: NOT TO SCALE

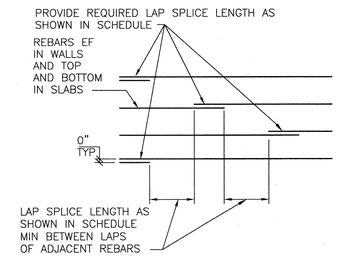

HORIZONTAL SLAB & WALL REFORCING

SCALE: NOT TO SCALE

STANDARD 90° HOOKS TABLE

HOOK LENGTH								
#3	#4	#5	#6	#7	#8	#9	#10	#11
6"	8"	10"	1'-0"	1'-2"	1'-4"	1'-7"	1'-10"	2'-0"

BAR SPLICE TABLE

MINIMUM LAP SPLICE LENGTHS fc=4000 psi					
BAR	* MIN BAR SPACING	LAPS FOR BARS SPACED GREATER THAN MIN BAR SPACING		LAPS FOR BARS SPACED CLOSER THAN MIN BAR SPACING	
		VERTICAL	OTHER	VERTICAL	OTHER
#3	3"	1'-4"	1'-6"	1'-4"	1'-6"
#4	3"	1'-7"	2'-0"	1'-8"	2'-2"
#5	3"	1'-11"	2'-6"	2'-7"	3'-4"
#6	4"	2'-4"	3'-0"	3'-8"	4'-9"
#7	4"	3'-6"	4'-6"	4'-11"	6'-5"
#8	4"	4'-7"	5'-11"	6'-6"	8'-6"
#9	4 1/2"	5'-9"	7'-6"	8'-3"	10'-9"
#10	5"	7'-4"	9'-6"	10'-6"	13'-7"
#11	5 5/8"	9'-0"	11'-6"	12'-10"	16'-8"

1 ALL REBAR SPLICES SHALL BE AS SHOWN UNDER HEADING "VERTICAL" EXCEPT IF SPLICED BARS ARE HORIZONTAL BARS WITH 12" OR MORE CONCRETE BELOW. THEN SPLICE LENGTH SHALL BE AS SHOWN UNDER HEADING "OTHER".

2 * AT SPLICES THE BAR SPACING IS THE CENTER TO CENTER DISTANCE BETWEEN ADJACENT REBARS.

3 ALL SPLICES SHALL BE CONTACT SPLICES AND WIRED TOGETHER.

FOR STAGGERED REINFORCING DETAIL SEE SHEET S-06

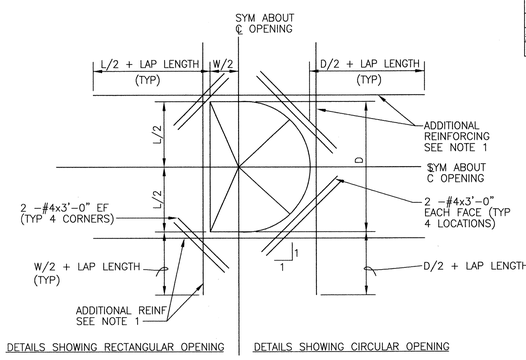

DETAILS SHOWING RECTANGULAR OPENING

DETAILS SHOWING CIRCULAR OPENING

DETAIL EXTRA REBARS AROUND OPENINGS IN SLABS & WALLS

SCALE: NOT TO SCALE

NOTES:
1. ADDITIONAL REINFORCING SHALL BE THE SAME SIZE AS DISCONTINOUS REINFORCEMENT AT OPENING. QUANTITY OF REINFORCING IN EACH DIRECTION SHALL BE EQUAL TO OR ONE GREATER THAN THE NUMBER OF DISCONTINUOUS BARS. PLACE 1/2 OF ADDITIONAL REINFORCING BARS EACH SIDE OF OPENING. PLACE ADDITIONAL REINFORCEMENT AT 3" O.C. (TYPICAL BOTH DIRECTIONS AND ALL LAYERS OF REINFORCEMENT).
2. ADDITIONAL REINFORCING SHALL EXTEND BEYOND EDGE OF OPENING AS SHOWN ABOVE. ADDITIONAL BARS MAY TERMINATE AT THE END OF THE WALL WITH A STANDARD HOOK WHERE THE LENGTH OF THE WALL WILL NOT PERMIT BARS TO EXTEND AS SHOWN ABOVE.
3. TYPICAL WALL OR SLAB REINFORCING NOT SHOWN FOR CLARITY. TERMINATE TYPICAL REINFORCING 2" CLEAR TO OPENING.
4. OPENINGS 12" OR LESS IN SLABS & OPENINGS 18" OR LESS IN WALLS, NO EXTRA REBARS ARE REQUIRED UNLESS SHOWN OTHERWISE. TYPICAL REINFORCING SHALL BE SPREAD (NOT CUT) TO ALLOW FOR OPENINGS TO BE MADE.
5. UNLESS SHOWN OTHERWISE ON DRAWINGS, PROVIDE EXTRA REINFORCING AROUND OPENINGS AS SHOWN AND INDICATED ABOVE.

AS BUILT INFORMATION

CONTRACTOR	Cambra Const.	DATE 7/03
WORK STAKED BY	ASCT	DATE 7/03
INSPECTOR'S ACCEPTANCE BY	Cambra Const	DATE 7/03
FIELD VERIFICATION BY	COE	DATE 7/03
DRAWINGS CORRECTED BY	HDR	DATE 8/03

MICRO-FILM INFORMATION

RECORDED BY	
DATE	
NO.	

BENCH MARKS

SURVEY INFORMATION

FIELD NOTES

NO.	BY	DATE

ENGINEER'S SEAL

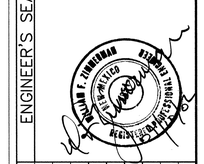

REVISIONS

NO.	DATE	BY	REMARKS

DESIGNED BY	WFZ	DATE NOV 2001
DRAWN BY	RAG	DATE NOV 2001
CHECKED BY	WFZ / ZHS	DATE JAN 2002

HDR

HDR Engineering, Inc.

BERNALILLO COUNTY
PUBLIC WORKS DIVISION

TITLE: PAJARITO AREA VACUUM STATION
GENERAL
NOTES

Design Review Committee | City Engineer Approval | Last Design Update | Mo./Day/Yr. | Mo./Day/Yr.

APPROVED SEP 12 2002 CITY ENGINEER

PROJECT NO.	TS – 01 – 13 COA – 647291	MAP NO. Q-10, R-10	SHEET G-02	OF 2

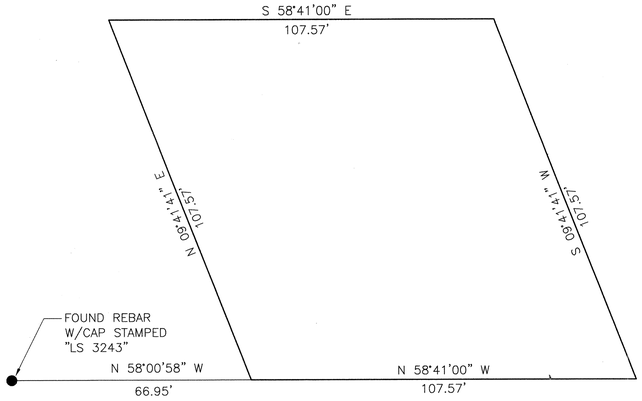

LOT PLAN

SCALE: 1" = 20'

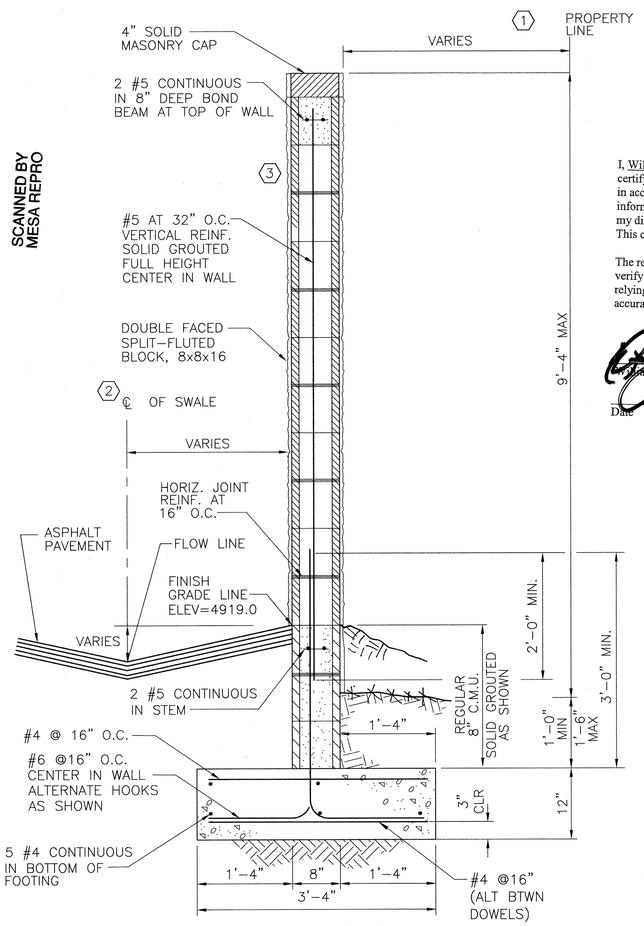

SECTION B–B

SCALE: 1" = 1'-0"

1. NOT USED
2. COORDINATE SITE GRADING AT SITE WALL WITH PROJECT MANAGER.
3. SPRAY ANTI-GRAFFITI COATING ON WALLS.

SCANNED BY
MESA REPRO

I, William F. Zimmerman, NMPE 8051, of the firm HDR Engineering, Inc., hereby certify that this project has been graded and will drain in substantial compliance with and in accordance with the design intent of the approved plan dated 9/11/02. The record information edited onto the original design document has been obtained by me or under my direct supervision and is true and correct to the best of my knowledge and belief. This certification is submitted in support of a request for a Certificate of Occupancy.

The record information presented hereon is not necessarily complete and intended only to verify substantial compliance of the grading and drainage aspects of this project. Those relying on this record document are advised to obtain independent verification of its accuracy before using it for any other purpose.

William F. Zimmerman, NMPE 8051

Date 09/02/03

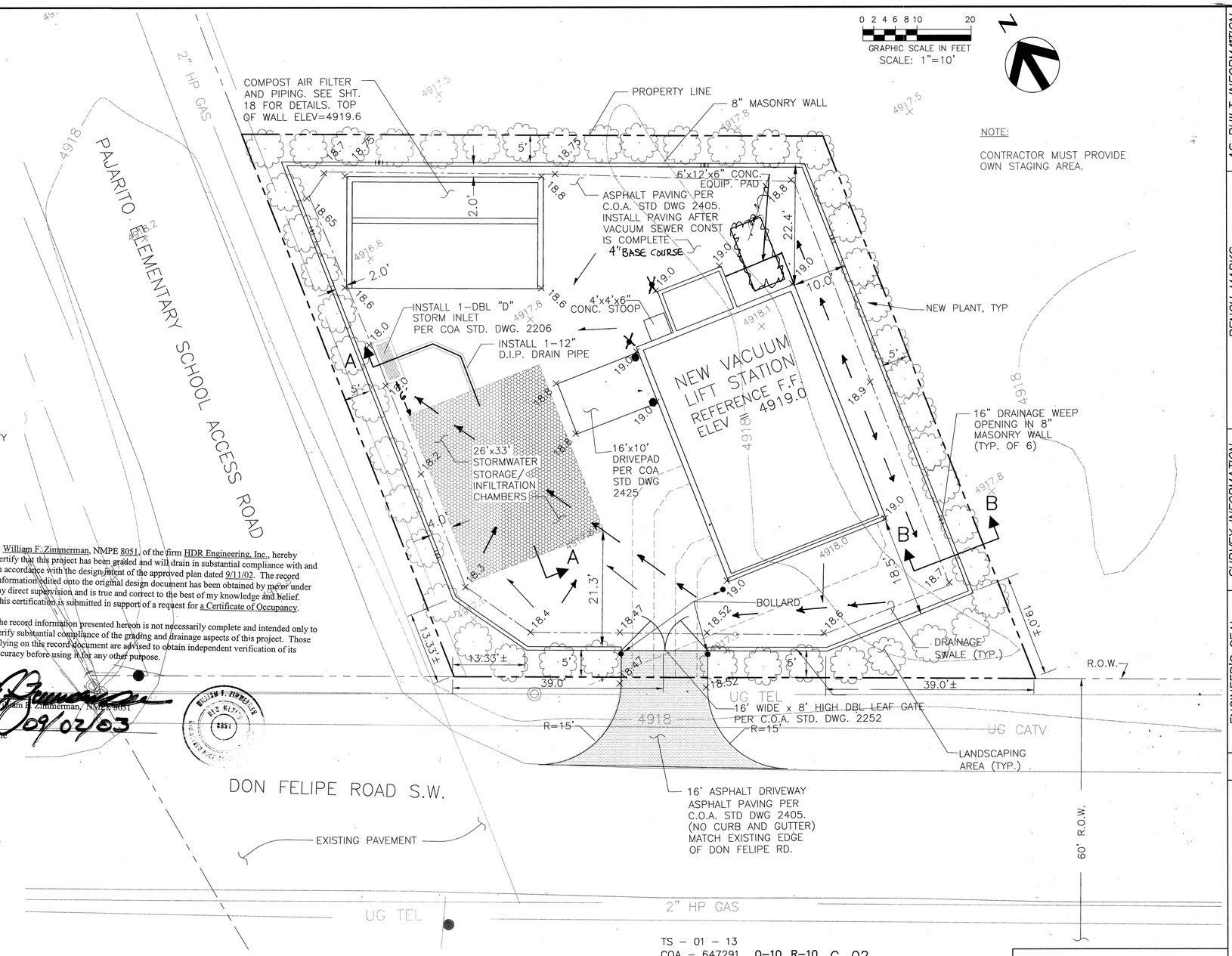

TS – 01 – 13
COA – 647291 Q–10, R–10

C–02
SHEET 4 OF 24

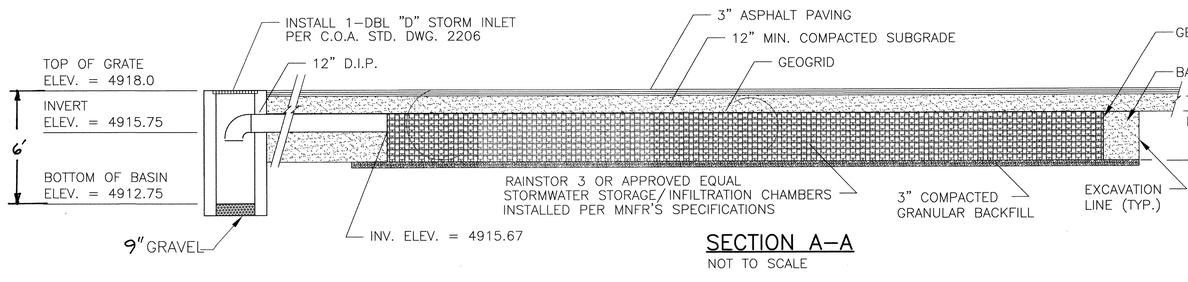

SECTION A–A

NOT TO SCALE

HDR

HDR Engineering, Inc.

BERNALILLO COUNTY
PUBLIC WORKS DIVISION

TITLE: PAJARITO AREA VACUUM STATION
SITE LAYOUT
GRADING AND DRAINAGE PLAN

Design Review Committee	City Engineer Approval	Last Design Update	Mo./Day/Yr.	Mo./Day/Yr.

PROJECT NO.	MAP NO.	SHEET	OF
TS – 01 – 13 COA – 647291	Q–10, R–10	C–01	2

ENGINEER'S SEAL

NO.	DATE	BY	REMARKS
			REVISIONS

DESIGNED BY JE DATE NOV 2001
DRAWN BY RAG DATE NOV 2001
CHECKED BY WFZ DATE NOV 2001

AS BUILT INFORMATION

CONTRACTOR Cumbre Const. DATE 7/03
WORK STAKED BY ASCI DATE 7/03
ACCEPTANCE BY Cumbre Const. DATE 7/03
FIELD VERIFICATION BY COE DATE 7/03
DRAWINGS CORRECTED BY HDR DATE 8/03
MICRO-FILM INFORMATION
RECORDED BY DATE
NO.

BENCH MARKS

ACS. Aluminum Cap, "2R-10", Don Felipe Road SW
NM (HPGN) Central Zone, NAD83 (Us.ft.)
N= 1 454 487.97, E= 1 502 103.18
(Converted from NAD27 using Corpscon V.5.11.05)
Elevation= 4918.05 NAVD88 (Us.Ft.)
[4918.05 (NAVD88) – 2.61 = 4915.44 (NGVD29)]

SURVEY INFORMATION
FIELD NOTES

NO.	BY	DATE

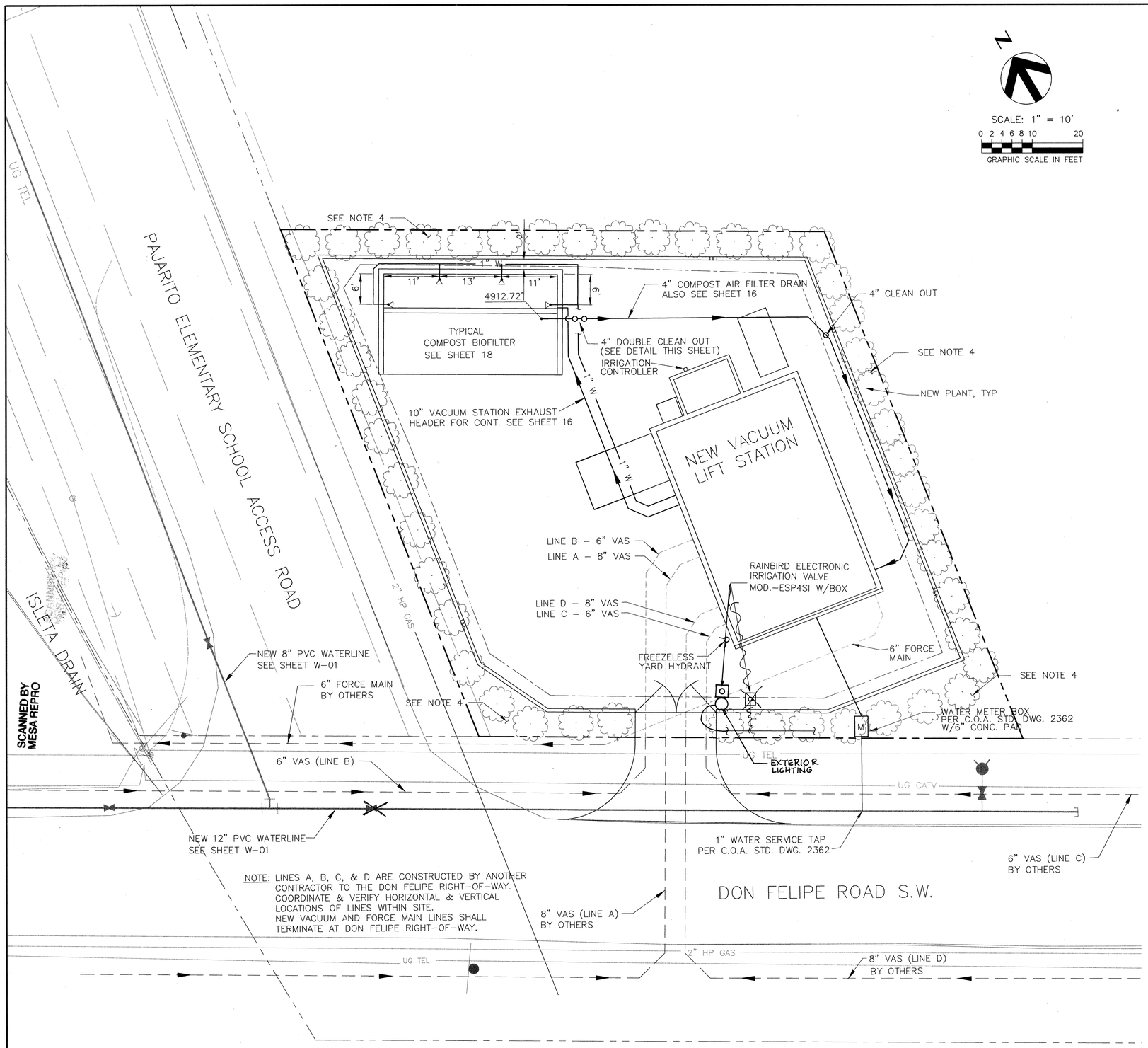

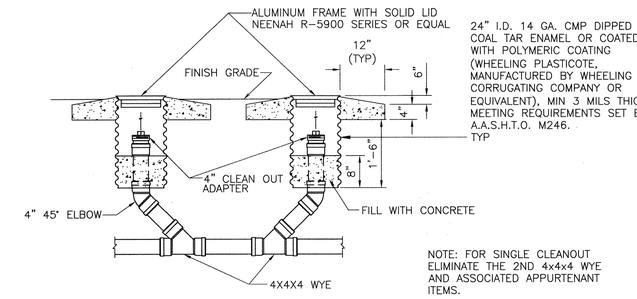

4" DOUBLE CLEANOUT DETAIL

SCALE: NTS

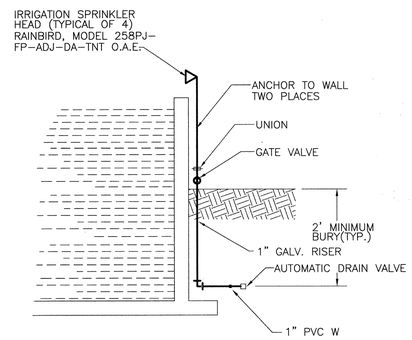

BIOFILTER SPRINKLER

SCALE: NTS

NOTES:

1. ALL UNDERGROUND UTILITIES SHOWN ON THIS PLAN ARE APPROXIMATE LOCATIONS. VERIFY LOCATION OF ALL UNDERGROUND UTILITIES BEFORE COMMENCING WORK.
2. VACUUM STATION & ASSOCIATED PIPING CONNECTING TO SEWER LINES CONSTRUCTED BY OTHERS AND ARE ASSUMED TO BE COMPLETE PRIOR TO CONSTRUCTION OF THIS PROJECT. PROTECT PLUGGED PIPES UNTIL FINAL CONNECTION IS MADE.
3. FOR CONTINUATION OF PIPING INTO PUMP STATION SEE SHT. 16.
4. PLANT 1 GAL. PEROVSKIA FILIGRAN (COMPACT RUSSIAN SAGE) AND CHRYSOTHUMNUS NAUSEOSIS (CHAMISA RUBBER FLATBUSH) AT 5' SPACING. IRRIGATE WITH DRIP IRRIGATION.
5. TRENCHING, BACKFILL, COMPACTION, AND PAVEMENT REPLACEMENT ARE TO BE PER CITY OF ALBUQUERQUE STANDARD DETAILS AND SPECIFICATIONS.

AS BUILT INFORMATION
CONTRACTOR Cumbre Const. DATE 7/03
WORK STAKED BY ASCI DATE 7/03
INSPECTOR'S ACCEPTANCE BY Cumbre Const. DATE 7/03
FIELD VERIFICATION BY CDE DATE 7/03
DRAWINGS CORRECTED BY HDR DATE 8/03
MICRO-FILM INFORMATION
RECORDED BY DATE
NO.

BENCH MARKS
ACS. Aluminum Cap. "2R-10", Don Felipe Road SW
NM (HPGN) Central Zone, NAD83 (Us.ft.)
N= 1 454 487.97, E= 1 502 103.18
(Converted from NAD27 using Corpscon V.5.11.05)
Elevation= 4918.05 NAVD88 (Us.ft.)
[4918.05 (NAVD88) – 2.61 = 4915.44 (NGVD29)]

SURVEY INFORMATION
FIELD NOTES

NO.	BY	DATE

ENGINEER'S SEAL

NO.	DATE	REMARKS	BY
		REVISIONS	
		DESIGN	

		DATE
DESIGNED BY	WFZ	NOV 2001
DRAWN BY	RAG	NOV 2001
CHECKED BY	WFZ	NOV 2001

HDR
HDR Engineering, Inc.

BERNALILLO COUNTY
PUBLIC WORKS DIVISION

TITLE: PAJARITO AREA VACUUM STATION
SITE PIPING
PLAN

Design Review Committee | City Engineer Approval: SEP 12 2002 | Last Design Update | Mo./Day/Yr. | Mo./Day/Yr.

PROJECT NO.	MAP NO.	SHEET	OF
TS – 01 – 13 COA – 647291	Q-10, R-10	C-02	2

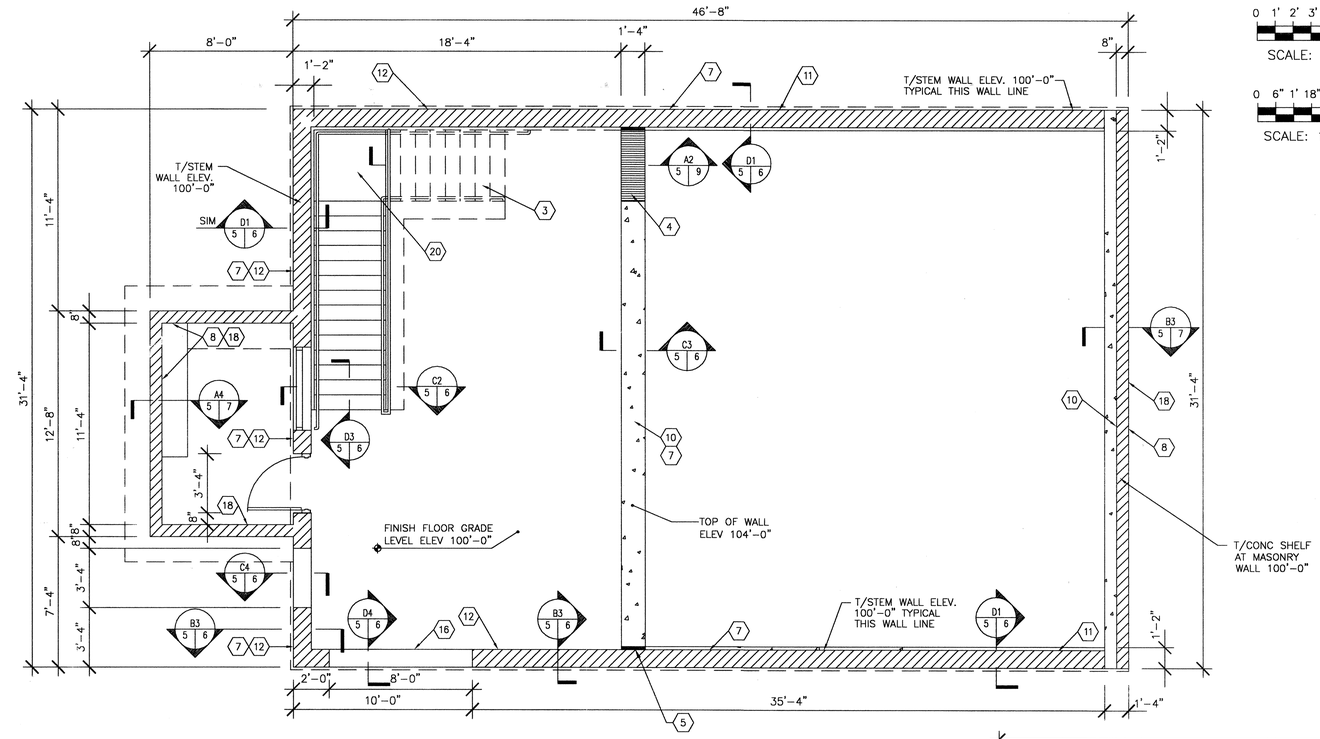

PLAN AT GRADE LEVEL

SCALE: 1/4" = 1'-0"

SCALE: 1/4"=1'-0"

SCALE: 1/2"=1'-0"

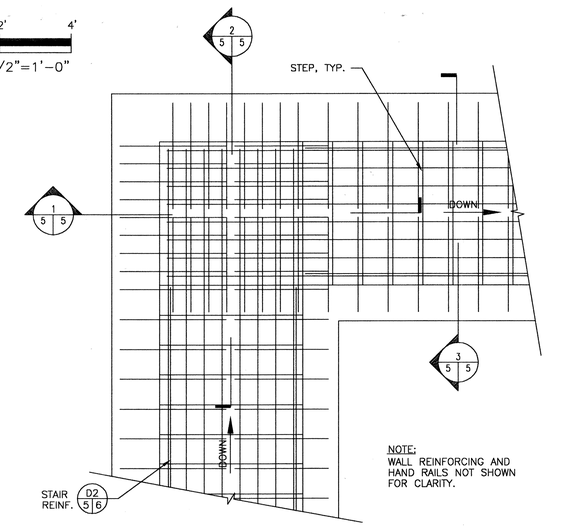

LANDING DETAIL

SCALE: 1/2" = 1'-0"

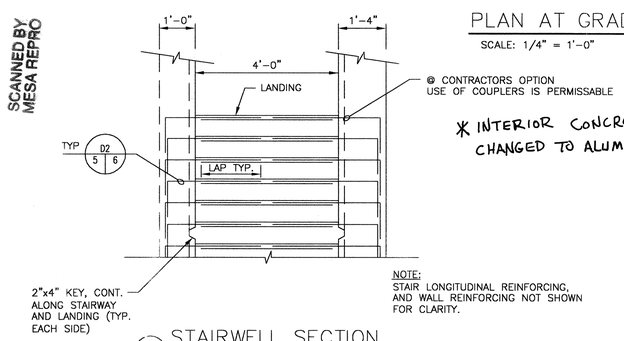

@ CONTRACTORS OPTION
USE OF COUPLERS IS PERMISSABLE

* INTERIOR CONCRETE STAIR CHANGED TO ALUM. PREFAB

STAIRWELL SECTION

SCALE: 1/2" = 1'-0"

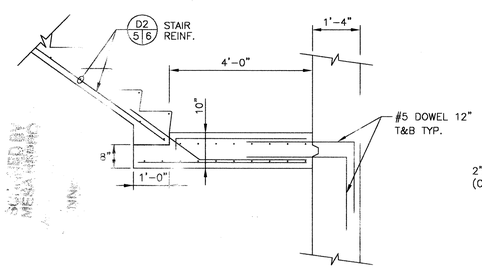

S RWEL SECTION AT LANDING

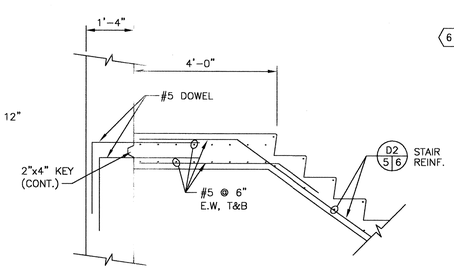

STAIRWELL SECTION AT LANDING

SCALE: 1/2" = 1'-0"

* CONCRETE STAIR CHANGED TO ALUM.

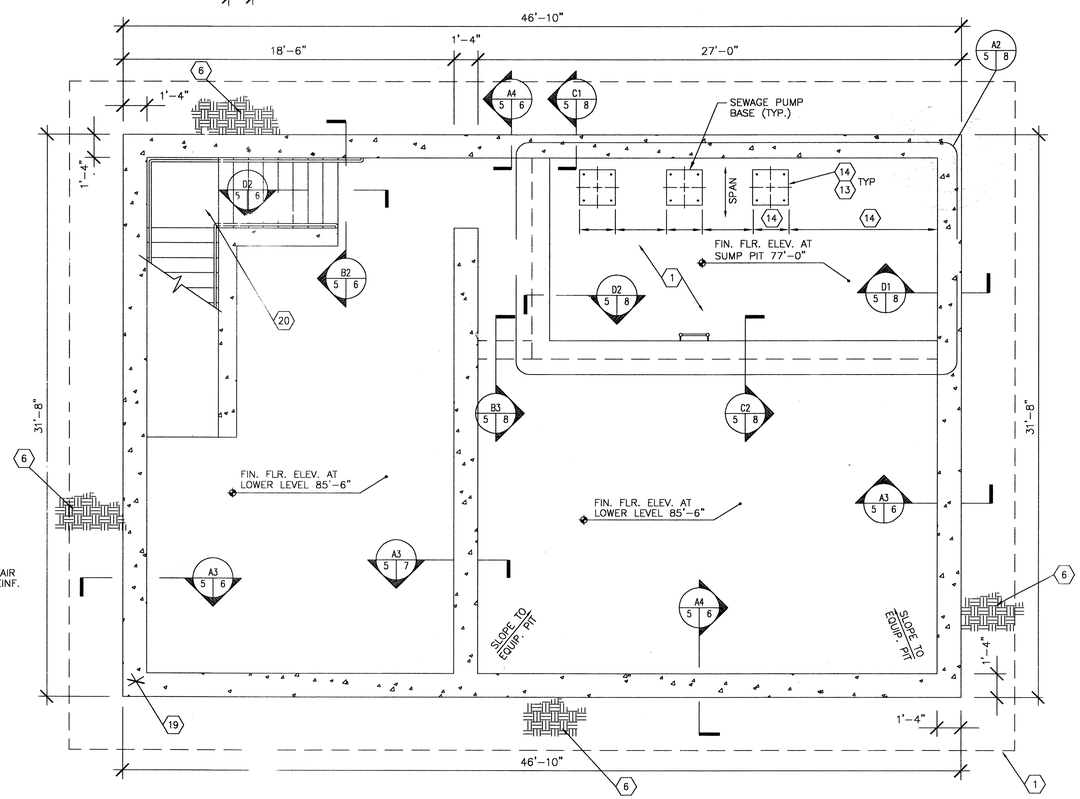

FOUNDATION PLAN AT LOWER LEVEL

SCALE: 1/4" = 1'-0"

GENERAL SHEET NOTES:

A) REFERENCE FINISH FLOOR ELEVATION 4919.0 = 100'-0" AND REFERENCES DATUM C-01.

B) FOR BOLLARDS AND HANDRAIL SIZES AND LOCATIONS, SEE ARCHITECTURAL DRAWINGS.

C) BUILDING LOCATION SHALL BE PER SITE PLAN, SHEET C-01.

D) FOR PIPE SIZES AND LOCATIONS, SEE SHEET P-01.

E) FOR MECHANICAL WALL PENETRATION LOCATIONS AND SIZES, SEE AND COORDINATE WITH ARCHITECTURAL AND MECHANICAL DRAWINGS AND SEE DETAIL SHEET P-01.

F) EQUIPMENT DIMENSIONS ARE SUBJECT TO MANUFACTURING VARIATIONS. VERIFY PRIOR TO INITIATION OF CONSTRUCTION.

G) FOR SHEET WATERPROOFING BELOW GRADE, SEE ARCHITECTURAL DRAWINGS.

H) FOR GENERAL NOTES SEE G-02

SHEET KEYED NOTES : (X)

1) CAST-IN-PLACE CONCRETE MAT FOUNDATION SHAPE AS SHOWN x 1'-8" THICK. SEE DETAILS.
2) NOT USED
3) CAST-IN-PLACE CONCRETE STAIRS - SEE ARCHITECTURAL DRAWINGS FOR RISE AND RUN.
4) CAST-IN-PLACE CONCRETE LINTEL AT STAIRWELL.
5) FOR WALL TIES CONC./ CMU SEE ARCHITECTURAL.
6) STRUCTURAL BACK FILL
7) CONCRETE MASONRY UNIT - 12" WIDE
8) CONCRETE MASONRY UNIT - 8" WIDE
9) CONCRETE WALL PER SECTION A4/2.
10) HORIZ. BOND BEAMS THIS WALL LINE PER DETAIL A1/3.
11) HORIZ. BOND BEAMS THIS WALL LINE PER HORIZONTAL REINFORCING SECTION C3/7
12) HORIZ. BOND BEAMS THIS WALL LINE PER HORIZONTAL REINFORCING SECTION C2/7
13) LOCATION OF TANKS AND ANCHORING REQUIREMENTS SUBJECT TO EQUIPMENT SUPPLIED. COORDINATE WITH MANUFACTURER PRIOR TO CONSTRUCTION.
14) EQPT. PAD, t = 3 1/2". COORDINATE LOCATION AND SIZE WITH EQUIPMENT MANUF.
15) NOT USED
16) COILING DOOR, SEE ARCHITECTURAL
17) HORIZ. BOND BEAMS THIS WALL LINE PER HORIZONTAL REINFORCING SECTION C4/7.
18) HORIZ. BOND BEAMS THIS WALL LINE PER DETAILS B1/3 AND C1/3.
19) CORNER REINFOR. DETAIL, SEE SHEET G-2. TYP. WALL REINF. PER DETAIL B3/2. DOWEL VERT. BARS INTO SLAB @ TOP & BOTTOM OF WALL.
20) LANDING DETAIL, SEE ENLARGED VIEW, THIS SHT.

AS BUILT INFORMATION
CONTRACTOR Cumbre Const. DATE 7/1/03
WORK STAKED BY ASCI DATE 7/1/03
INSPECTOR'S ACCEPTANCE BY Cumbre Const DATE 7/1/03
FIELD VERIFICATION BY COE DATE 7/1/03
DRAWINGS CORRECTED BY HDR DATE 8/1/03
MICRO-FILM INFORMATION
RECORDED BY DATE
NO.

BENCH MARKS

SURVEY INFORMATION
FIELD NOTES
NO. BY DATE

ENGINEER'S SEAL
FRED H. SAGGI
NEW MEXICO
12250
REGISTERED PROFESSIONAL ENGINEER
4-9-02

REVISIONS
NO. DATE REMARKS BY
DESIGN
DESIGNED BY WFZ DATE NOV 2001
DRAWN BY R.G DATE NOV 2001
CHECKED BY WFZ / ZHS DATE JAN 2002

HDR
HDR Engineering, Inc.

BERNALILLO COUNTY
PUBLIC WORKS DIVISION

TITLE: PAJARITO AREA VACUUM STATION
STRUCTURAL FOUNDATION PLANS
BELOW AND AT GRADE LEVEL

Design Review Committee | City Engineer Approval | Last Design Update | Mo./Day/Yr. | Mo./Day/Yr.

PROJECT NO. TS - 01 - 13 COA - 647291 | NO. 2, R-10 | SHEET S-01 | OF 6

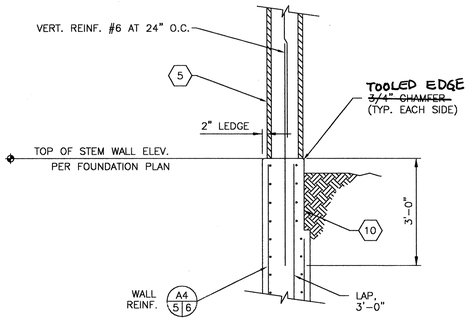

D1 5|6 SECTION AT TOP OF CONCRETE WALL
SCALE: 1/2" = 1'-0"

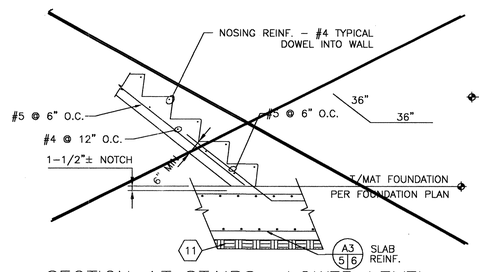

D2 5|6 SECTION AT STAIRS– LOWER LEVEL
SCALE: 1/2" = 1'-0"

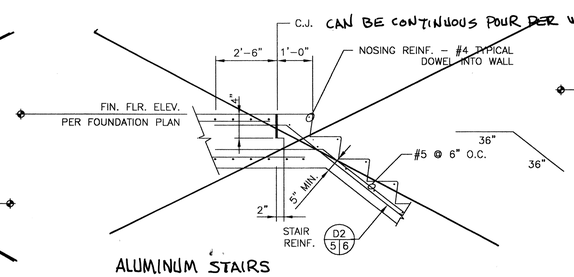

D3 5|6 SECTION AT STAIRS– UPPER LEVEL
SCALE: 1/2" = 1'-0"

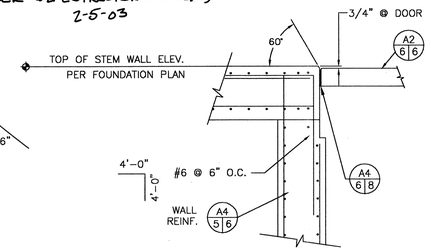

D4 5|6 SECTION AT MASONRY OPENING
SCALE: 1/2" = 1'-0"

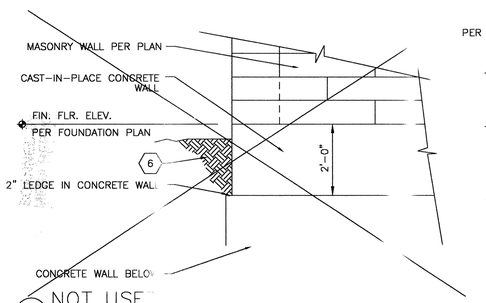

C1 5|6 NOT USED
SCALE: 1/2" = 1'-0"

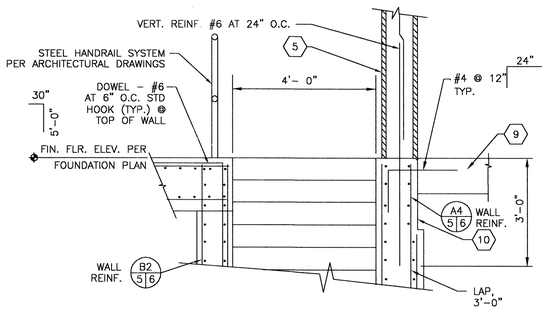

C2 5|6 STAIRWELL SECTION AT UPPER LEVEL
SCALE: 1/2" = 1'-0"

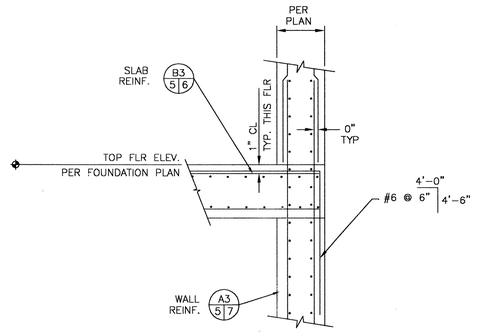

C3 5|6 CONC. WALL AT SLAB SECTION
SCALE: 1/2" = 1'-0"

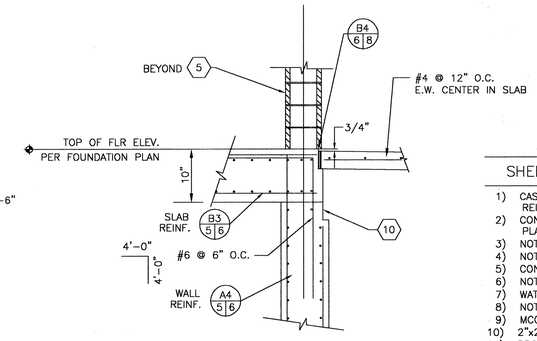

C4 5|6 SECTION AT MASONRY OPENING
SCALE: 1/2" = 1'-0"

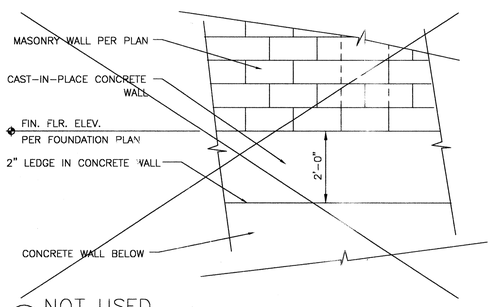

B1 5|6 NOT USED
SCALE: 1/2" = 1'-0"

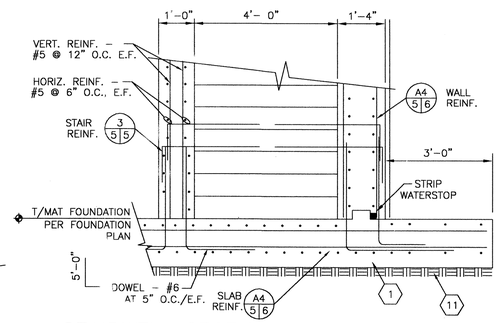

B2 5|6 STAIRWELL SECTION AT LOWER LEVEL
SCALE: 1/2" = 1'-0"

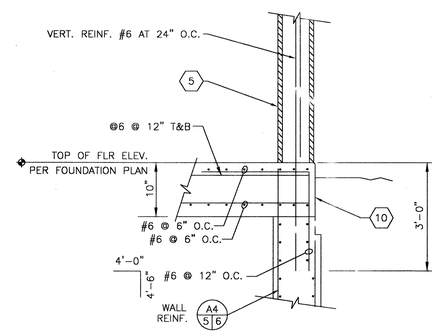

B3 5|6 SECTION AT WALL
SCALE: 1/2" = 1'-0"

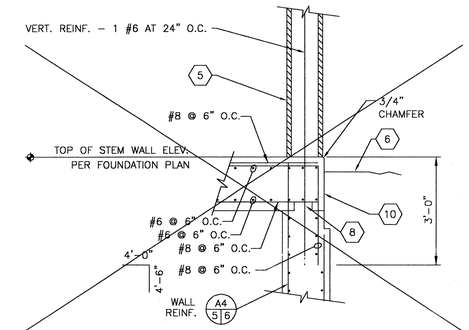

B4 5|6 NOT USED
SCALE: 1/2" = 1'-0"

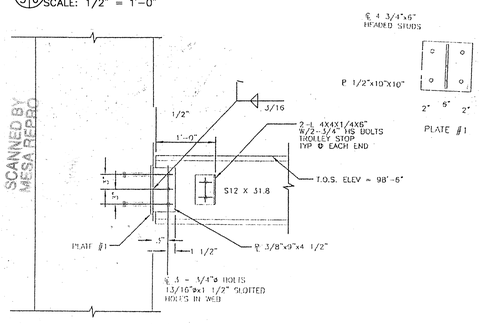

A2 5|9 SCALE: N.T.S.

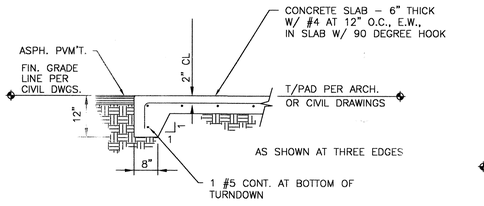

–ALL–

A2 6|6 SECTION AT EXTERIOR SLAB
SCALE: 1/2" = 1'-0"

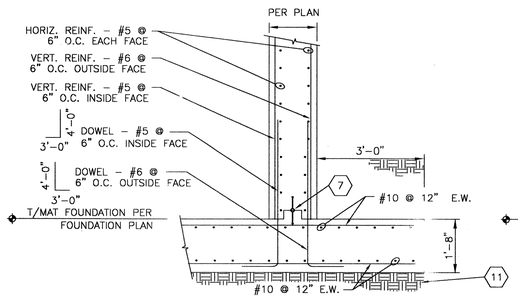

A3 5|6 SECTION AT LOWER LEVEL FOUNDATION
SCALE: 1/2" = 1'-0"

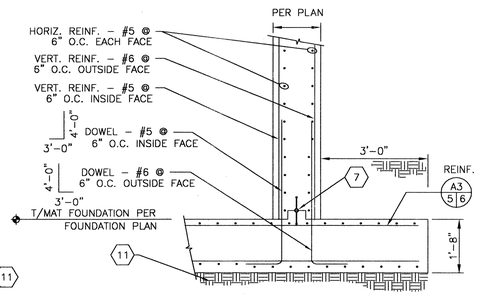

A4 5|6 SECTION AT LOWER LEVEL FOUNDATION
SCALE: 1/2" = 1'-0"

GENERAL SHEET NOTES:

A) REFERENCE FINISH FLOOR ELEVATION 4919.0 = 100'-0" AND REFERENCES DATUM ELEVATION SHOWN ON SHEET 3

B) SEE ARCHITECTURAL FOR PERIMETER INSULATION AND WATER PROOFING

SHEET KEYED NOTES : (X)

1) CAST-IN-PLACE MAT FOUNDATION REINFORCEMENT PER FOUNDATION PLAN
2) CONCRETE FLOOR SLAB PER FOUNDATION PLAN
3) NOT USED
4) NOT USED
5) CONCRETE MASONRY UNIT WALL – 12" WIDE
6) NOT USED
7) WATERSTOP, CONTINUOUS JOINT (HYDROPHILIC)
8) NOT USED
9) MCC FLOOR SLAB, REINF. NOT SHOWN
10) 2"x2'-2" NOTCH, START AT GRADE.
11) PROVIDE MINIMUM OF 3" MUDSLAB UNDER THE ENTIRE SLAB

0 6" 1' 18" 2' 4'
SCALE: 1/2"=1'-0"

HDR
HDR Engineering, Inc

BERNALILLO COUNTY
PUBLIC WORKS DIVISION

TITLE: PAJARITO AREA VACUUM STATION
STRUCTURAL DETAILS (1 OF 3)

Design Review Committee | City Engineer Approval | Last Design Update | Mo./Day/Yr. | Mo./Day/Yr.

PROJECT NO. TS – 01 – 13 COA – 647291 | MAP NO. Q-10, R-10 | SHEET S-02 | OF 6

SHEET 6 OF 25

ENGINEER'S SEAL
LEE H. SAGGI NEW MEXICO 12250 REGISTERED PROFESSIONAL ENGINEER
4-9-02

NO.	DATE	REMARKS	BY
		REVISIONS	
		DESIGN	

DESIGNED BY	WFZ	DATE NOV 2001
DRAWN BY	RAG	DATE NOV 2001
CHECKED BY	WFZ / ZHS	DATE JAN 2002

AS BUILT INFORMATION
CONTRACTOR Cambre Const. DATE 7/03
WORK STAKED BY ASCI DATE 7/03
INSPECTOR'S ACCEPTANCE BY Cambre Const. DATE 7/03
FIELD VERIFICATION BY CGS DATE 7/03
DRAWINGS CORRECTED BY HDR DATE 8/03
MICRO-FILM INFORMATION
RECORDED BY DATE
NO.

BENCH MARKS

SURVEY INFORMATION
FIELD NOTES
NO. | BY | DATE

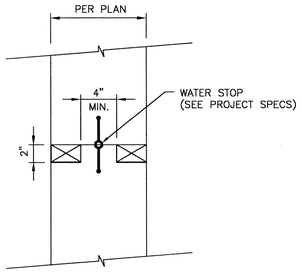

D1/1 UPTURNED KEY DETAIL
N.T.S.

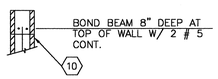

C1/7/7 TOP OF CMU WALL DETAIL
SCALE: 1/2" = 1'-0"

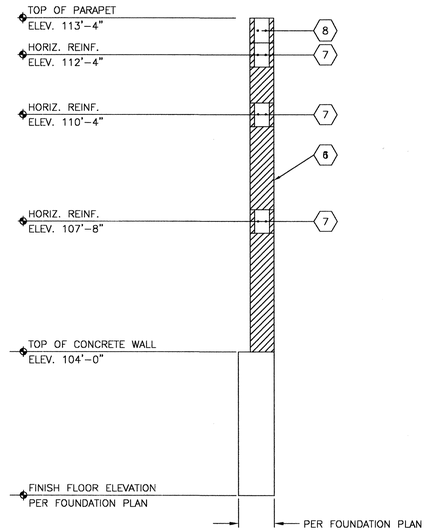

C2/5/7 HORIZONTAL BOND BEAM SECTION
SCALE: 1/2" = 1'-0"

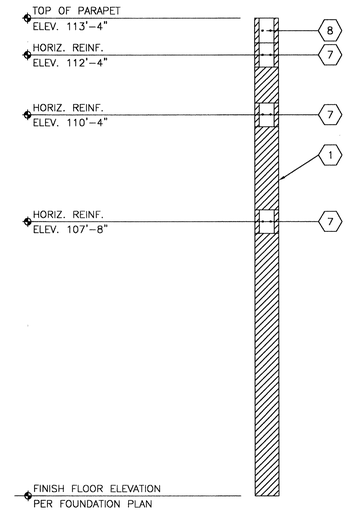

C3/5/7 HORIZONTAL BOND BEAM SECTION
SCALE: 1/2" = 1'-0"

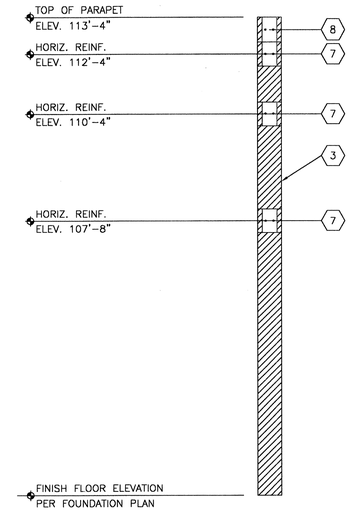

C4/5/7 HORIZONTAL BOND BEAM SECTION
SCALE: 1/2" = 1'-0"

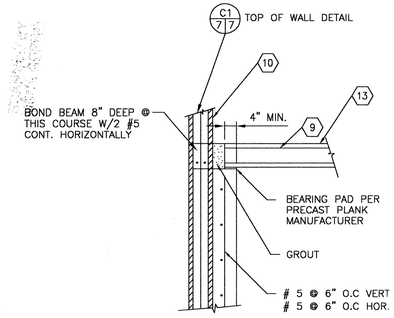

B1/9/7 PRECAST PLANK BEARING DETAIL
SCALE: 1/2" = 1'-0"

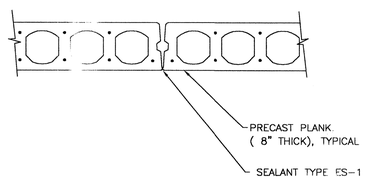

B2/9/7 PRECAST PLANK JOINT DETAIL
SCALE: 1/4" = 1'-0"

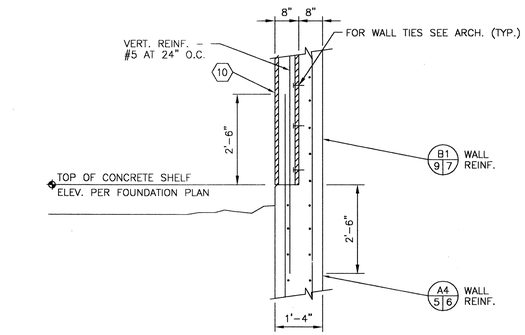

B3/5/7 SECTION AT CMU WALL/ BUILDING INTERFACE
SCALE: 1/2" = 1'-0"

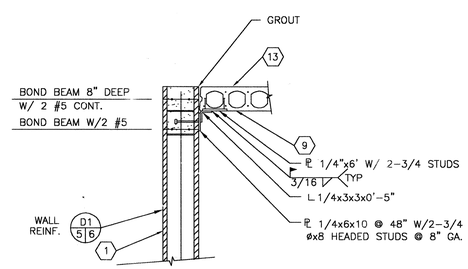

A1/9/7 PRECAST PLANK SIDE CONDITION
SCALE: 1/2" = 1'-0"

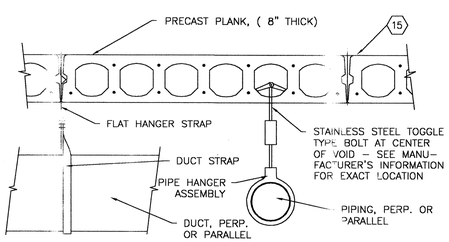

A2/9/7 PRECAST PLANK DUCT ANCHORAGE
SCALE: 1/4" = 1'-0"

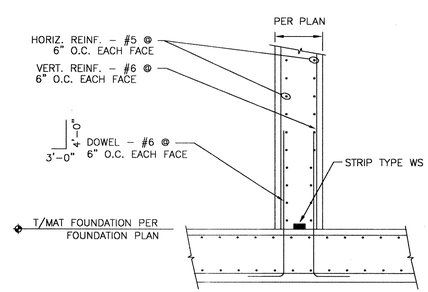

A3/5/7 SECTION AT CENTER WALL
SCALE: 1/2" = 1'-0"

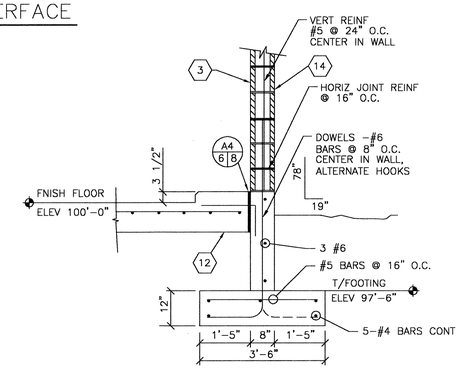

A4/5/7 SECTION AT 8" CMU WALL
SCALE: 1/2" = 1'-0"

SCANNED BY
MESA REPRO

GENERAL SHEET NOTES:

A) REFERENCE FINISH FLOOR ELEVATION 4919.0 = 100'-0" AND REFERENCES DATUM ELEVATION SHOWN ON SHEET 3

SHEET KEYED NOTES : (X)

1) CONCRETE MASONRY UNIT WALL – 12" WIDE
2) CONCRETE MASONRY UNIT PARAPET WALL – 8" WIDE
3) CONCRETE MASONRY UNIT WALL – 8" WIDE
4) CONCRETE FOOTING SIZE AND REINFORCING PER FOUNDATION PLAN
5) NOT USED
6) NOT USED
7) BOND BEAM – 8" DEEP W/ 2 #5 CONT. HORIZONTALLY
8) BOND BEAM – 8" DEEP W/ 2 #5 CONT. HORIZONTALLY
9) PRECAST PLANK – 8" THICK
10) CONCRETE MASONRY UNIT SITE WALL 8" WIDE W/VERT REINF – 1 #5 @ 24" O.C.
11) NOT USED
12) CONCRETE FLOOR SLAB, t = 6", #4 @ 12" O.C.. E.W., CENTER IN SLAB.
13) SEE ARCH. PLANS FOR ROOFING, NOT SHOWN.
14) SEE SHEET S-6 FOR ADD'L. MASONRY DETAILS.
15) CONTRACTOR TO COORDINATE DESIGN AND LOCATION OF ALL MONORAIL INSERT PLATES.

0 1' 2' 3' 4' 8'
SCALE: 1/4"=1'-0"

0 6" 1' 18" 2' 4'
SCALE: 1/2"=1'-0"

HDR
HDR Engineering, Inc.

AS BUILT INFORMATION

		DATE
CONTRACTOR		
WORK STAKED BY	See Sh. 2	
INSPECTOR'S ACCEPTANCE BY		DATE
FIELD VERIFICATION BY		
DRAWINGS CORRECTED BY		DATE

MICRO-FILM INFORMATION

	DATE
RECORDED BY	
NO.	

BENCH MARKS

NO.	DATE	REMARKS	BY

REVISIONS

DESIGN		
DESIGNED BY	WFZ	DATE NOV 2001
DRAWN BY	RAG	DATE NOV 2001
CHECKED BY	WFZ / ZHS	DATE JAN 2002

SURVEY INFORMATION

FIELD NOTES		
NO.	BY	DATE

ENGINEER'S SEAL
JEFF H. SAGGI
NEW MEXICO
12250
REGISTERED PROFESSIONAL ENGINEER
4-9-02

BERNALILLO COUNTY
PUBLIC WORKS DIVISION

TITLE: PAJARITO AREA VACUUM STATION
STRUCTURAL DETAILS (2 OF 3)

Design Review Committee	City Engineer Approval	Last Design Update	Mo./Day/Yr.	Mo./Day/Yr.
APPROVED	APPROVED CITY ENGINEER			

PROJECT NO.	MAP NO.	SHEET	OF
TS – 01 – 13 COA – 647291	Q-10, R-10	S-03	6

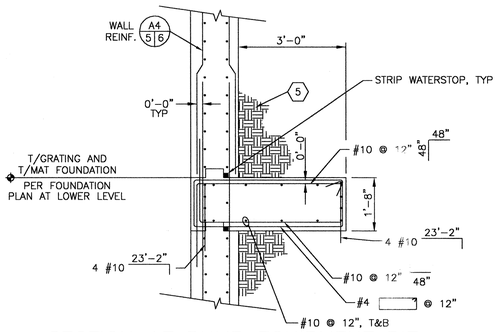

D1 5|8 SECTION AT PUMP EQUIPMENT PIT
SCALE: 1/2" = 1'-0"

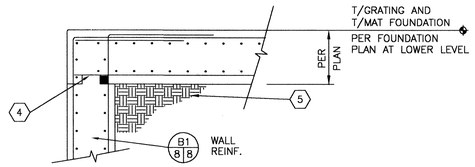

D2 5|8 SECTION AT PUMP EQUIPMENT PIT
SCALE: 1/2" = 1'-0"

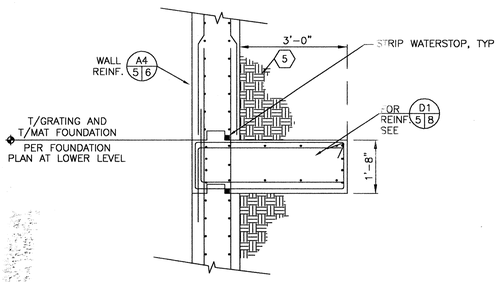

C1 5|8 SECTION AT PUMP EQUIPMENT PIT
SCALE: 1/2" = 1'-0"

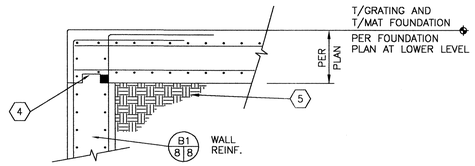

C2 5|8 SECTION AT PUMP EQUIPMENT PIT
SCALE: 1/2" = 1'-0"

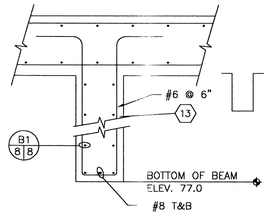

B3 5|8 SECTION AT GRADE BEAM
SCALE: 1/2" = 1'-0"

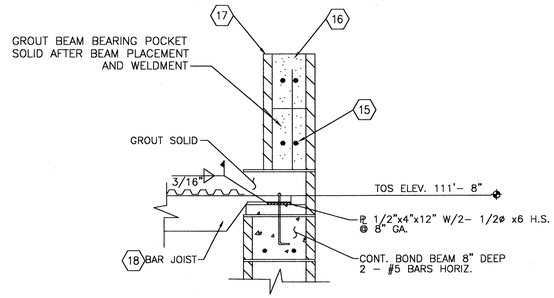

D3 9|8 SECTION AT JOIST BEARING @ 12" CMU
SCALE: 1" = 1'-0"

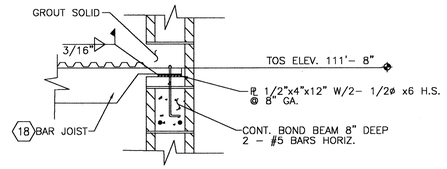

D4 9|8 SECTION AT JOIST BEARING @ 8" CMU
SCALE: 1" = 1'-0"

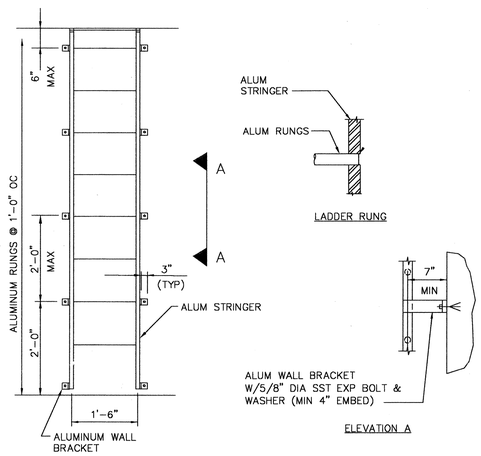

E1 8|8 LADDER SECTION AT PUMP PIT
N.T.S.

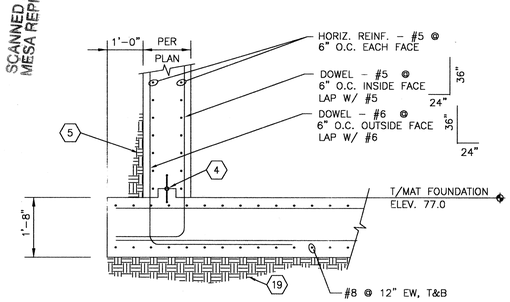

B1 8|8 SECTION AT PUMP EQUIPMENT PIT
SCALE: 1/2" = 1'-0"

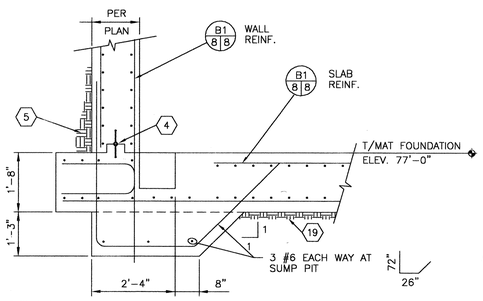

A1 8|8 SECTION AT SUMP PIT
SCALE: 1/2" = 1'-0"

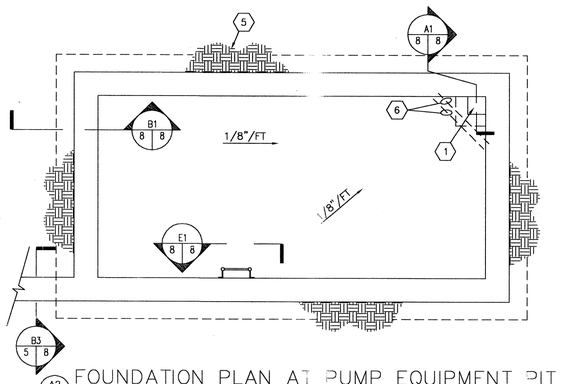

A2 5|8 FOUNDATION PLAN AT PUMP EQUIPMENT PIT
SCALE: 1/4" = 1'-0"

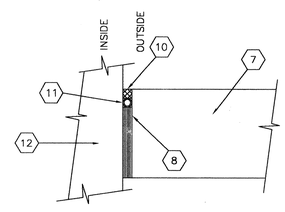

A4 6|8 JOINT SEALANT DETAIL
SCALE: 3" = 1'-0"

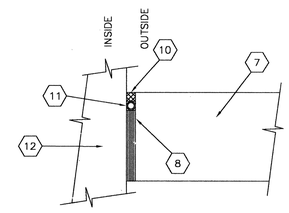

B4 6|8 JOINT SEALANT DETAIL
SCALE: 3" = 1'-0"

GENERAL SHEET NOTES:

A) REFERENCE FINISH FLOOR ELEVATION 4919.0 = 100'-0" AND REFERENCES DATUM ELEVATION SHOWN ON SHEET 3

B) FOR BOLLARDS AND HANDRAIL SIZES AND LOCATIONS, SEE ARCHITECTURAL DRAWINGS.

C) BUILDING LOCATION SHALL BE PER SITE PLAN, SEE SHEET 3

D) FOR PIPE SIZES AND LOCATIONS, SEE EQUIPMENT PLAN, SECTION AND DETAIL DRAWING.

E) FOR MECHANICAL WALL PENETRATION LOCATIONS AND SIZES, SEE AND COORDINATE WITH ARCHITECTURAL AND MECHANICAL DRAWINGS AND SEE DETAIL, SHEET G-2.

F) EQUIPMENT DIMENSIONS ARE SUBJECT TO CHANGE BY MANUFACTURER. VERIFY AND CONFIRM WITH PROJECT MANAGER PRIOR TO INITIATION OF CONSTRUCTION.

G) FOR SHEET WATERPROOFING BELOW GRADE, SEE ARCHITECTURAL DRAWINGS

SHEET KEYED NOTES : (X)

1) SUMP PIT - 12" x 12" x 12" DEEP, CONSTRUCTION PER SECTION
2) CAST-IN-PLACE CONCRETE MAT FOUNDATION PER FOUNDATION PLAN, 1'-8" THICK
3) CAST-IN-PLACE CONCRETE MAT FOUNDATION SHAPE AS SHOWN x 1'-6" THICK. SEE DETAILS.
4) WATERSTOP, KEYED JOINT. (HYDROPHILIC)
5) STRUCTURAL BACK FILL
6) PROVIDE (2) #5 x 4'-0" DIAG. CORNER BARS AT SUMP PIT, 2" AND 4" FROM CORNER TOP FACE.
7) CONCRETE SLAB PER FOUNDATION PLAN
8) JOINT FILLER
9) NOT USED
10) SEALANT TYPE ES-2
11) JOINT BACKER ROD
12) CONCRETE MASONRY UNIT WALL OR CONCRETE WALL PER FOUNATION PLAN
13) CAST GRADE BEAM AS AN INTEGRAL PART OF WALL SHOWN ON SECTION C2/5/8. GB TO END UNDER WALL SHOWN ON SECTION A3/5/7
14) 4" WIDE BEARING PLATE W/ 2- 3/4"ø x 10" ANCHOR BOLTS AT 8" MIN. CAGE. LENGTH OF BEARING PLATE = JOIST BEARING WIDTH PLUS 6" MIN., t = 1/2". CENTER JOIST BEARING IN WALL.
15) LINTEL L8, SEE S-6.
16) BOND BEAM - 8" DEEP W/ 2-#5 CONT. HORIZONTALLY.
17) CONCRETE MASONRY UNIT PARAPET - 8" WIDE
18) AT CONTRACTOR'S OPTION STEEL JOIST MAY BE REPLACED WITH W6x20, FOR SUPPORTS USE DETAIL 02/9/9 (SIMILAR)
19) PROVIDE MINIMUM 3" MUDSLAB UNDER ENTIRE SLAB.

AS BUILT INFORMATION

	DATE
CONTRACTOR	
WORK STAKED BY	see
INSPECTOR'S ACCEPTANCE BY	SH. 2
FIELD VERIFICATION BY	
DRAWINGS CORRECTED BY	

MICRO-FILM INFORMATION

	DATE
RECORDED BY	
NO.	

BENCH MARKS

SURVEY INFORMATION

NO.	FIELD NOTES BY	DATE

ENGINEER'S SEAL

ZELEK H. SAGGI NEW MEXICO 12250 REGISTERED PROFESSIONAL ENGINEER
4-9-02

REVISIONS

NO.	DATE	REMARKS	BY

DESIGN

DESIGNED BY	WFZ	DATE NOV 2001
DRAWN BY	RAG	DATE NOV 2001
CHECKED BY	WFZ / ZHS	DATE JAN 2002

HDR

HDR Engineering, Inc.

BERNALILLO COUNTY
PUBLIC WORKS DIVISION

TITLE: PAJARITO AREA VACUUM STATION
STRUCTURAL DETAILS (3 OF 3)

Design Review Committee | City Engineer Approval | Last Design Update | Mo./Day/Yr. | Mo./Day/Yr.

APPROVED DESIGN REVIEW COMMITTEE
APPROVED CITY ENGINEER

PROJECT NO. IS - 01 - 13 COA - 647291 | MAP NO. Q-10, R-10 | SHEET S-04 OF 6

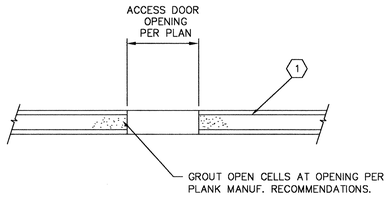

D1 9|9 DETAIL AT PRECAST PLANK OPENING
SCALE: 1/2" = 1'-0"

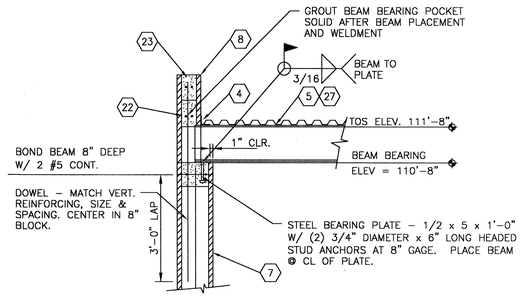

D2 9|9 SECTION AT BEAM BEARING
SCALE: 1/2" = 1'-0"

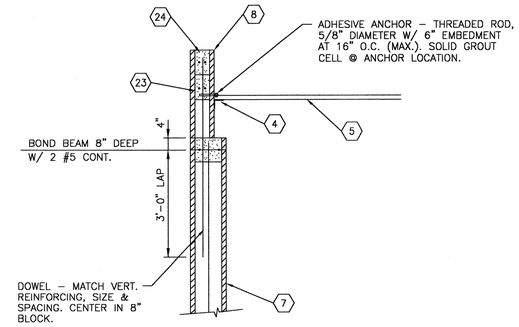

D3 9|9 SECTION AT LEDGER ANGLE
SCALE: 1/2" = 1'-0"

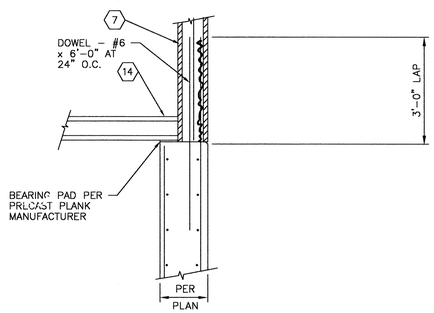

B2 9|9 PRECAST PLANK BEARING DETAIL
SCALE: 1/2" = 1'-0"

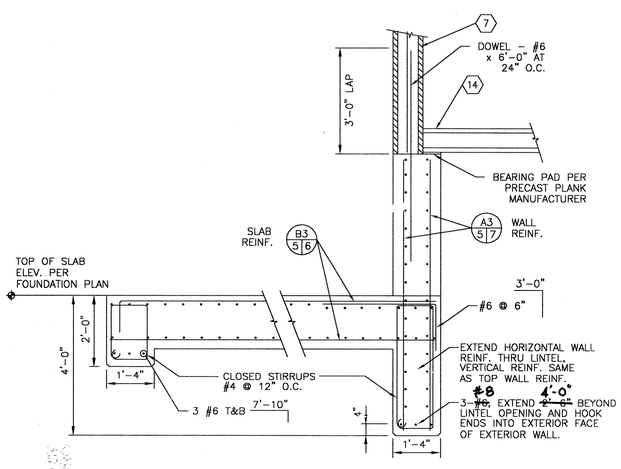

A2 5|9 SECTION AT STAIRWELL LINTEL
SCALE: ~~1/2" = 1'-0"~~
N.T.S.

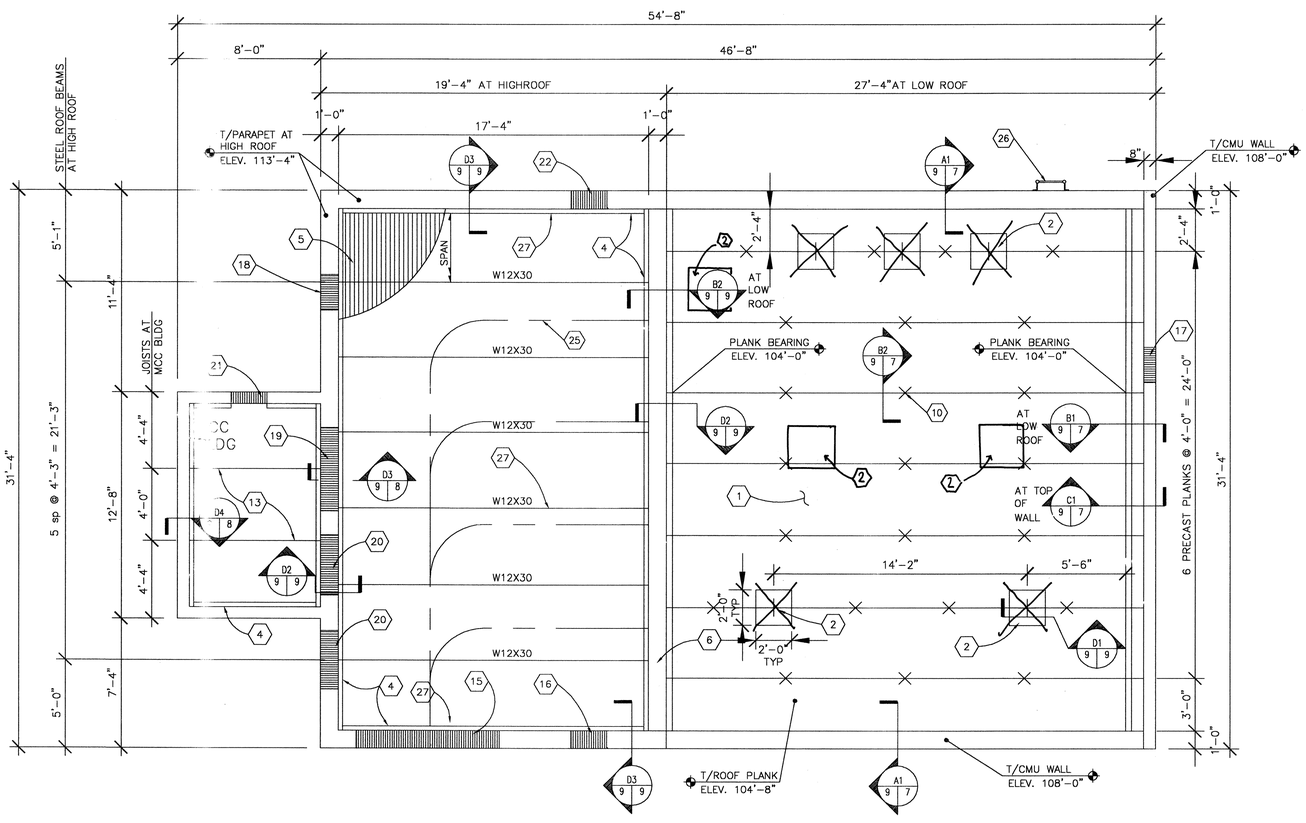

ROOF FRAMING PLAN AT LOW AND HIGH ROOFS
SCALE: 1/4" = 1'-0"

GENERAL SHEET NOTES:

A) REFERENCE FINISH FLOOR ELEVATION 4919.0 = 100'-0" AND REFERENCES DATUM ELEVATION SHOWN ON SHEET 3

B) ANCHORAGE OF DUCT WORK AND PIPING TO PRECAST PLANKS SHALL BE PER DETAIL A2 ON SHEET 7

C) SEE ARCHITECTURAL ROOF PLAN FOR SCUPPER LOCATIONS AND DETAILS AT SCUPPERS

D) ALL PRECAST H.C. CONNECTOR PANAL TO PANEL , PANEL TO WALL DUE TO DIAPHRAGM ACTION SHALL BE DESIGN BY HC PRECASTER.

SHEET KEYED NOTES : (X)

1) PRECAST PLANK – 8" THICK
2) CUTOUT TO BE CENTERED ON PLANK EDGE AS SHOWN. COORDINATE LOCATION AND SIZE WITH EQUIPMENT MANUFACTURER. SEE NOTE 14 ON SHEET 5
3) NOT USED.
4) LEDGER ANGLE – L 3 x 3 x 5/16 x CONT.
5) 1 1/2"x20 GA ROOF DECK – SPAN AS INDICATED ON PLAN
6) NOT USED
7) CONCRETE MASONRY UNIT WALL – 12" WIDE
8) CONCRETE MASONRY UNIT PARAPET – 8" WIDE
9) NOT USED
10) H.C. PLANK CONNECTORS BY PRECASTER, MINIMUM 3 CONNECTORS PER PANEL.
11) NOT USED.
12) NOT USED.
13) VUCRAFT 8K1 STEEL JOISTS. BEARING ELEV. 110'-10"
14) SEE ARCH. FOR ROOFING, NOT SHOWN.
15) LINTEL L1, SEE S-6.
16) LINTEL L2, SEE S-6.
17) LINTEL L3, SEE S-6.
18) LINTEL L4, SEE S-6.
19) LINTEL L5, SEE S-6.
20) LINTEL L6, SEE S-6.
21) LINTEL L7, SEE S-6.
22) LINTEL L8, SEE S-6.
23) BOND BEAM – 8" DEEP W/ 2-#5 CONT. HORIZONTALLY.
24) BOND BEAM – 8" DEEP W/ 2-#5 CONT. HORIZONTALLY.
25) GENERAL CONTRACTOR TO COORDINATE THE DESIGN OF MONORAIL BEAM AND BRACKETS WITH HOIST AND GLIDE SWITCH SUPPLIER(S).
26) FIXED ACCESS LADDER. SEE ARCHITECTURAL FOR LOCATION
27) DECK SHALL BE WELDED TO ALL SUPPORTING MEMBERS WITH 5/8" PUDDLE WELD @ EACH FLUTE. USE 5/8" @ 12" PUDDLE WELD AT PERIMETER SUPPORTS.

HDR Engineering, Inc.

BERNALILLO COUNTY
PUBLIC WORKS DIVISION

TITLE: PAJARITO AREA VACUUM STATION
STRUCTURAL – ROOF FRAMING
PLAN AND DETAILS

Design Review Committee | City Engineer Approval | Last Design Update | Mo./Day/Yr. | Mo./Day/Yr.

PROJECT NO. TS – 01 – 13 COA – 647291 | MAP NO. Q-10, R-10 | SHEET S-05 | OF 6

AS BUILT INFORMATION
CONTRACTOR | DATE
WORK STAKED BY | See SH. 2 | DATE
INSPECTOR'S ACCEPTANCE BY | DATE
FIELD VERIFICATION BY | DATE
DRAWINGS CORRECTED BY | DATE
MICRO-FILM INFORMATION
RECORDED BY | DATE
NO.

BENCH MARKS

SURVEY INFORMATION
FIELD NOTES
NO. | BY | DATE

ENGINEER'S SEAL
ZEEEF H. SAGGI NEW MEXICO (12250) REGISTERED PROFESSIONAL ENGINEER
9-9-02

REVISIONS

NO.	DATE	REMARKS	BY
		DESIGN	
		DESIGNED BY	WFZ
		DRAWN BY	RAG
		CHECKED BY	WFZ / ZHS

DATE NOV 2001
DATE NOV 2001
DATE JAN 2002

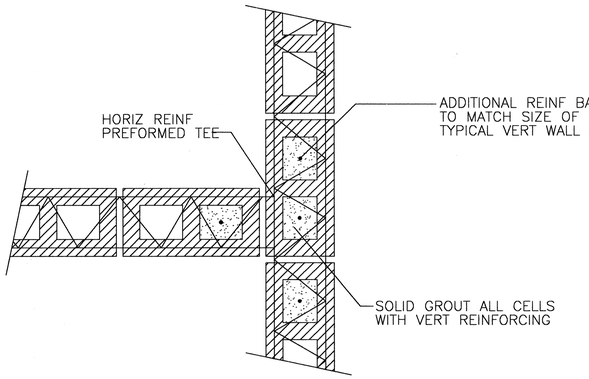

CMU REINFORCING AT INTERSECTIONS

NO SCALE

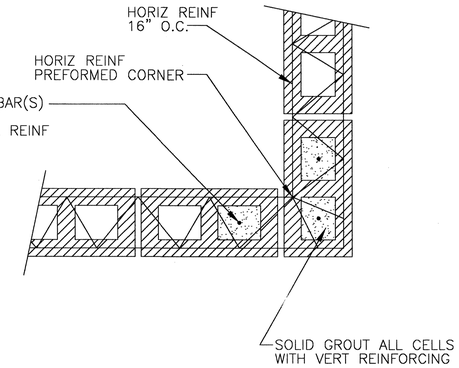

CMU REINFORCING AT CORNERS

NO SCALE

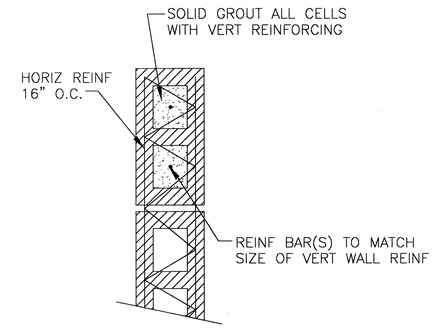

CMU REINFORCING AT END OF WALLS

NO SCALE

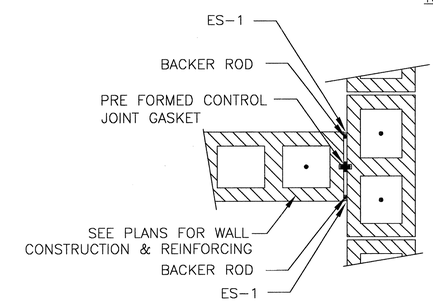

NOTES:

1) SEE PLANS FOR ADD'L. CMU CONTROL JOINT LOCATIONS AND CONDITIONS
2) FULL WALL HEIGHT CMU CONTROL JOINT REQUIRED AT ALL OPENINGS AND CMU WALL INTERSECTIONS.
3) DISCONTINUE HORIZ. JOINT REINF. AT CONTROL JOINT.
4) BOND BEAM REINF. CONTINUOUS THRU CONTROL JOINT
5) SLEEVE BOND BEAM REINF. TO BREAK BOND AT CONTROL JOINT.

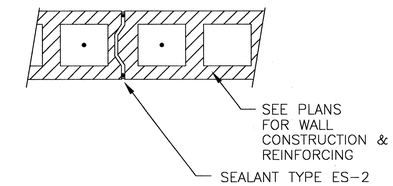

SECTION AT MASONRY CONTROL JOINT

SCALE: 1- 1/2" = 1'-0"

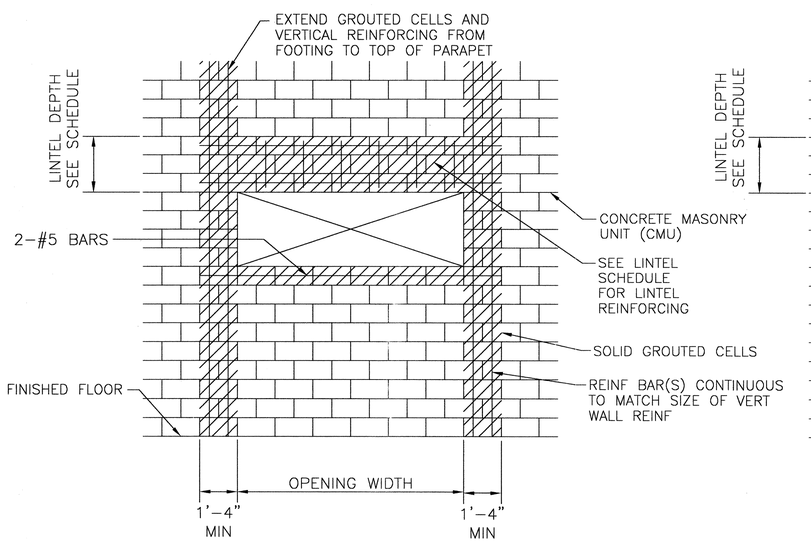

WINDOW LINTEL DETAIL

SCALE: 3/8" = 1'-0"

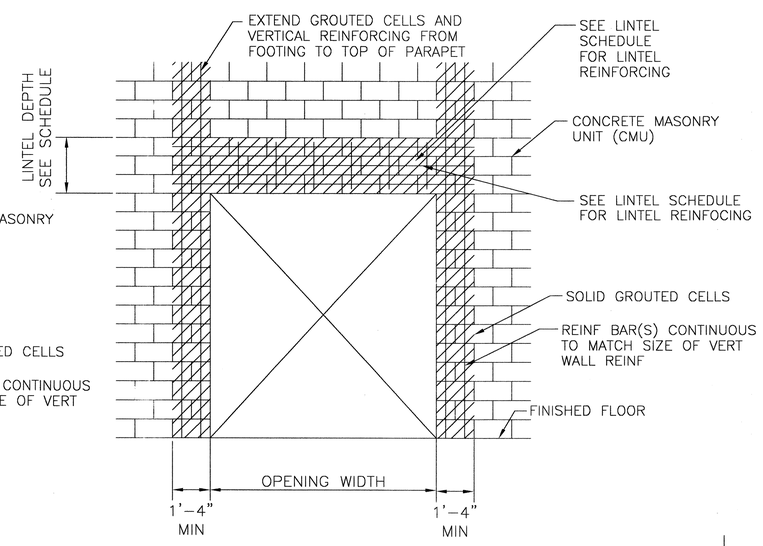

DOOR LINTEL DETAIL

SCALE: 3/8" = 1'-0"

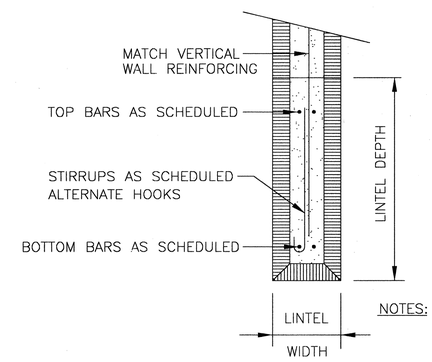

NOTES:

LINTEL REINFORCING DETAIL

SCALE: 1- 1/2" = 1'-0"

LINTEL SCHEDULE							
LINTEL MARK	OPENING WIDTH	LINTEL DIM		REINFORCING			LOCATION
		WIDTH	DEPTH	BOT	TOP	STIRRUPS	
L1	8'-0"	12"	32"	2-#5	2-#5	#5 @ 16"	ROLL-UP DOOR
L2	2'-0"	12"	8"	2-#5	---	---	MECHANICAL, WEST
L3	2'-0"	12"	8"	2-#5	---	---	MECHANICAL, SOUTH
L4	2'-0"	12"	8"	2-#5	---	---	MECHANICAL, NORTH
L5	4'-0"	12"	16"	2-#5	---	---	WINDOW @ MCC
L6	3'-4"	12"	16"	2-#5	---	---	MANDOOR TO BLDGS.
L7	2'-0"	8"	16"	2-#5	---	---	MECHANICAL, MCC
L8	2'-0"	8"	8"	2-#5	---	---	MECHANICAL, EAST

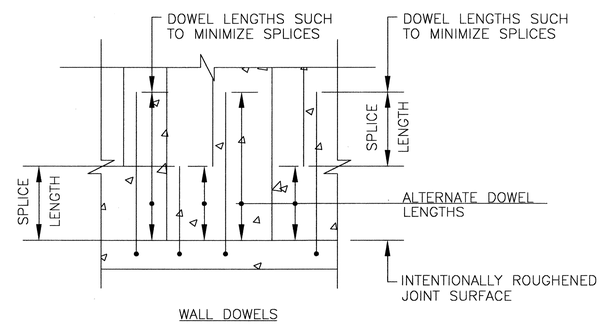

WALL DOWELS

STAGGERED REINFORCING DETAIL

NO SCALE

SCANNED BY MESA REPRO

AS BUILT INFORMATION

	DATE
CONTRACTOR	
WORK STAKED BY	See
INSPECTOR'S ACCEPTANCE BY	SH. 2
FIELD VERIFICATION BY	
DRAWINGS CORRECTED BY	

MICRO-FILM INFORMATION

RECORDED BY	DATE
NO.	

BENCH MARKS

SURVEY INFORMATION

FIELD NOTES

NO.	BY	DATE

ENGINEER'S SEAL

JEFFREY H. SAGGI NEW MEXICO (12250) REGISTERED PROFESSIONAL ENGINEER 9-9-02

REVISIONS

NO.	DATE	REMARKS	BY

DESIGN

DESIGNED BY	WFZ	DATE NOV 2001
DRAWN BY	RAG	DATE NOV 2001
CHECKED BY	WFZ / ZHS	DATE JAN 2002

HDR

HDR Engineering, Inc.

BERNALILLO COUNTY
PUBLIC WORKS DIVISION

TITLE: PAJARITO AREA VACUUM STATION
MASONRY DETAILS

Design Review Committee | City Engineer Approval | Last Design Update | Mo./Day/Yr. | Mo./Day/Yr.

REVIEW COMMITTEE | CITY ENGINEER

PROJECT NO.	TS - 01 - 13 COA - 647291	MAP NO.	SHEET	OF
		Q-10, R-10	S-06	6

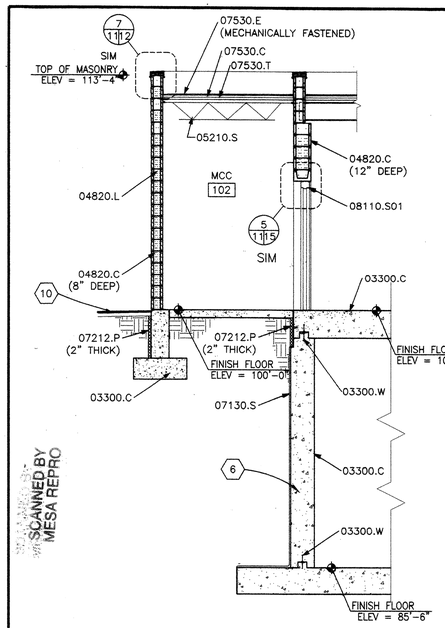

1 WALL SECTION
1/4"=1'-0"

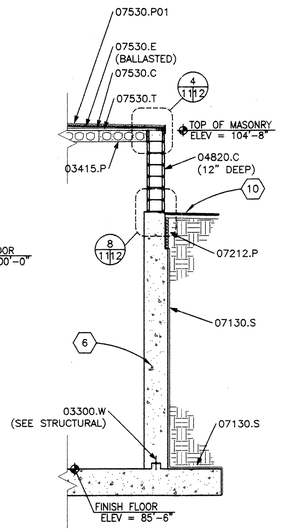

2 WALL SECTION
1/4"=1'-0"

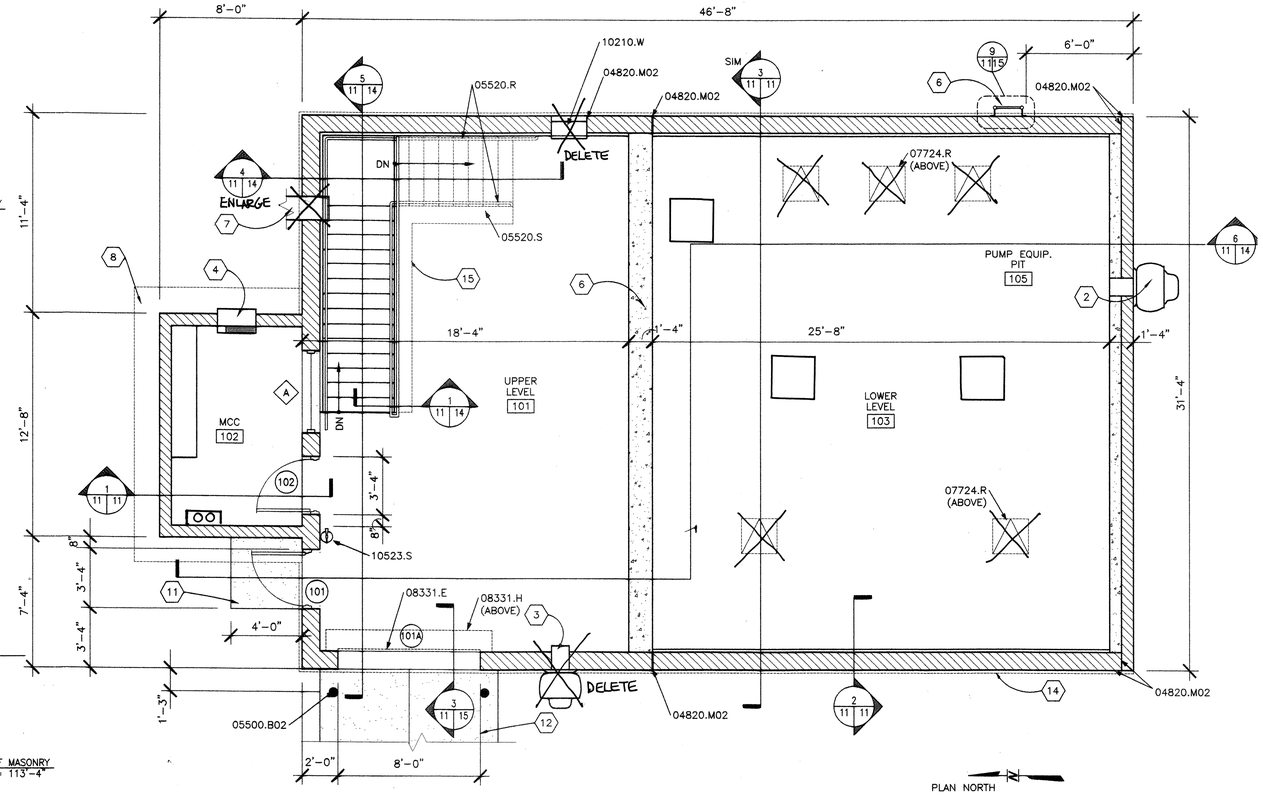

FLOOR PLAN – GRADE LEVEL
1/4"=1'-0"

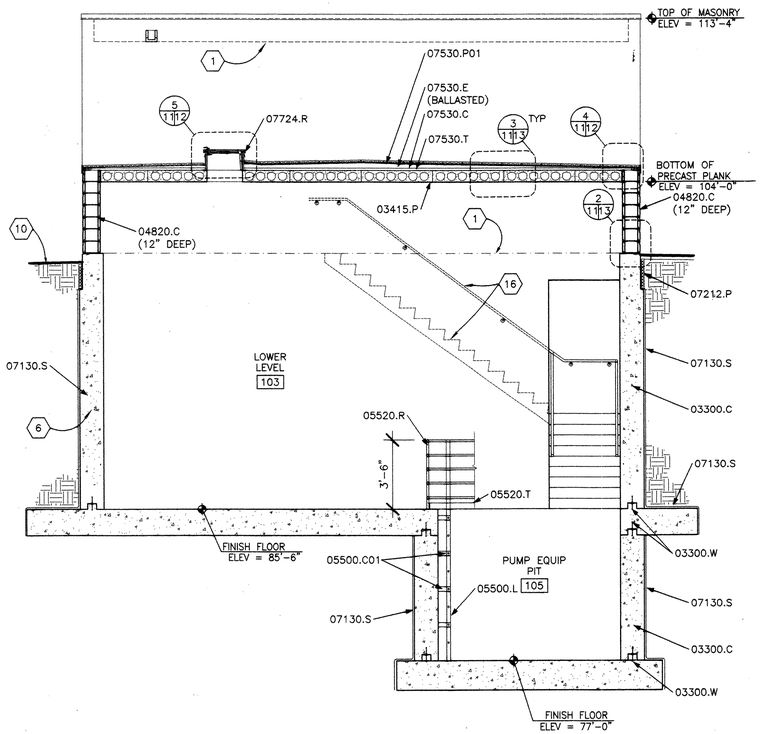

3 BUILDING SECTION
1/4"=1'-0"

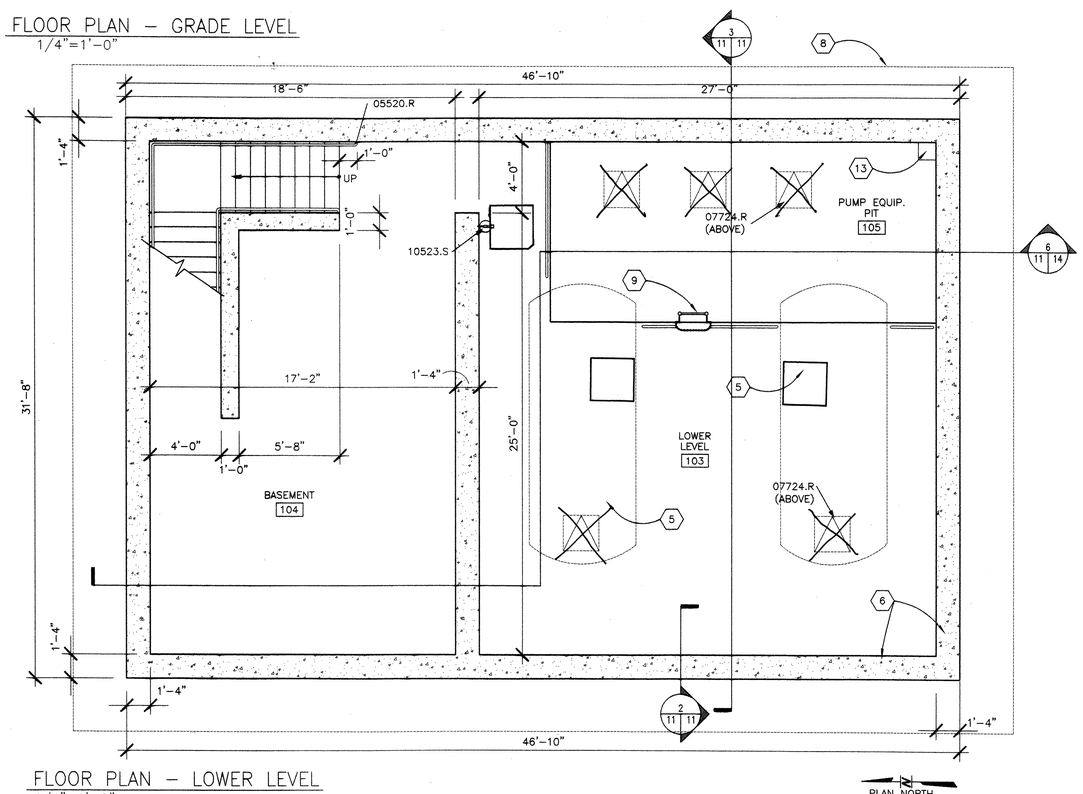

FLOOR PLAN – LOWER LEVEL
1/4"=1'-0"

GENERAL SHEET NOTES:

A) REFERENCE ELEVATIONS ARE BASED ON FINISH FLOOR ELECATION OF 100'-0". SEE CIVIL SHEETS FOR ACTUAL FINISH FLOOR ELEVATION.
B) SEE STRUCTURAL FOR SIZE AND LOCATION OF BOND BEAMS AND REINFORCING.

REFERENCE KEYNOTES :

DIVISION 3 – CONCRETE

03300.C CAST-IN-PLACE CONCRETE
03300.W WATERSTOP
03415.P PRECAST PLANK

DIVISION 4 – MASONRY

04820.C CONCRETE MASONRY UNITS
04820.L LOOSE FILL INSULATION
04820.M02 MASONRY CONTROL JOINT

DIVISION 5 – METALS

05210.S OPEN-WEB STEEL JOIST
05500.C01 CHEMICAL ANCHOR
05500.L LADDER
05500.S10 SAFETY POST
05520.R RAILING
05520.S STEEL RAILING SYSTEM
05520.T TOE BOARD

DIVISION 7 – THERMAL & MOISTURE PROTECTION

07130.S SHEET WATERPROOFING
07212.P PERIMETER INSULATION
07530.C COVER BOARD
07530.E ELASTOMERIC MEMBRANE ROOFING
07530.P01 PAVERS
07530.T TAPERED BOARD INSULATION
07724.R ROOF HATCH

DIVISION 8 – DOORS & WINDOWS

08110.S01 STEEL FRAME
08331.E EXTERIOR COILING DOOR
08331.H HOOD ENCLOSURE

DIVISION 10 – SPECIALTIES

10210.W WALL LOUVER
10523.S SURFACE MOUNTED FIRE EXTINGUISHER

(X) SHEET KEYNOTES :

1. LINE OF FINISH FLOOR BEYOND
2. EXHAUST FAN–SEE MECHANICAL
3. AIR INTAKE COVER–SEE MECHANICAL
4. AIR CONDITIONER UNIT
5. COLLECTION TANK. SEE SHEETS P-01 & P-02
6. SEE STRUCTURAL FOR CONSTRUCTION AND REINFORCING.
7. DUCTWORK SEE MECHANICAL.
8. DASHED LINE INDICATES EDGE OF FOOTING. SEE STRUCTRUAL.
9. PIT LADDER SEE SHEET P-2.
10. ASPHALT PAVING SEE SHEET C01.
11. CONCRETE STOOP SEE SHEET C01.
12. CONCRETE DRIVEWAY SEE SHEET C01.
13. SUMP – SEE STRUCTURAL.
14. DASHED LINE INDICATES FOUNDATION WALL BELOW.
15. DASHED LINE INDICATES LINE OF WALL BELOW.
16. DASHED LINE INDICATES STAIR AND HAND RAIL BEYOND.

LEGEND:

CAST IN PLACE CONCRETE
CONCRETE MASONRY UNITS

NUMBER INDICATES ELEVATION, SECTION OR DETAIL
SHEET WHERE ELEVATION, SECTION OR DETAIL IS SHOWN
SHEET WHERE ELEVATION, SECTION OR DETAIL IS TAKEN

HDR
HDR Engineering, Inc.

AS BUILT INFORMATION
CONTRACTOR — DATE
WORK STAKED BY — DATE
INSPECTOR'S ACCEPTANCE BY — DATE
See Sh. 2
FIELD VERIFICATION BY — DATE
DRAWINGS CORRECTED BY — DATE
MICRO-FILM INFORMATION
RECORDED BY — DATE
NO.

BENCH MARKS

SURVEY INFORMATION
FIELD NOTES
NO. | BY | DATE

SEALS
STATE OF NEW MEXICO
CHARLES RICK GREEN
REGISTERED ARCHITECT
22-JAN-02

NO.	DATE	REMARKS	BY
		REVISIONS	

DESIGN
DESIGNED BY DAA — DATE NOV 2001
DRAWN BY JAM, PSL, JAC — DATE NOV 2001
CHECKED BY CRG — DATE NOV 2001

BERNALILLO COUNTY
PUBLIC WORKS DIVISION

TITLE: PAJARITO AREA VACUUM STATION
FLOOR PLANS AND SECTIONS

Design Review Committee | City Engineer Approval | Last Design Update | Mo./Day/Yr. | Mo./Day/Yr.

PROJECT NO.	MAP NO.	SHEET	OF
BC-PWD-21463 COA – 647292	Q-10, R-10	A-1	5

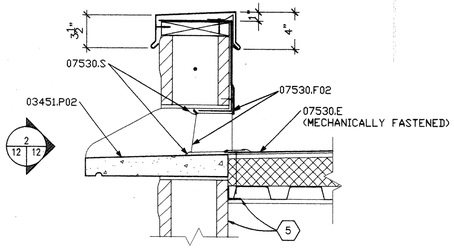

1 12 12 SECTION AT SCUPPER
1 1/2"=1'-0"

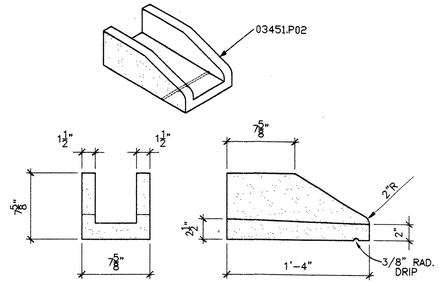

2 12 12 SCUPPER DETAIL
1 1/2"=1'-0"

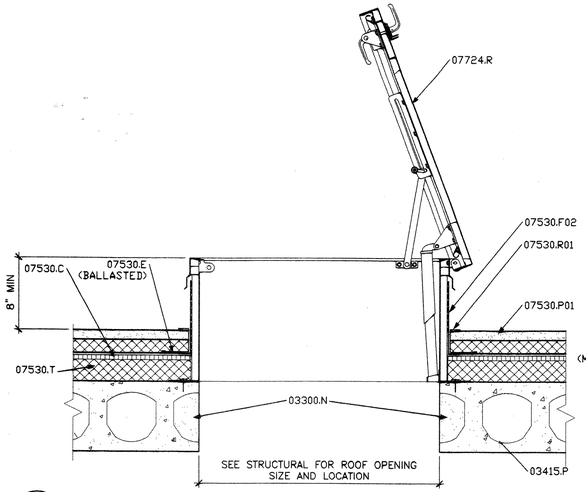

5 12 12 ROOF HATCH DETAIL
1 1/2"=1'-0"

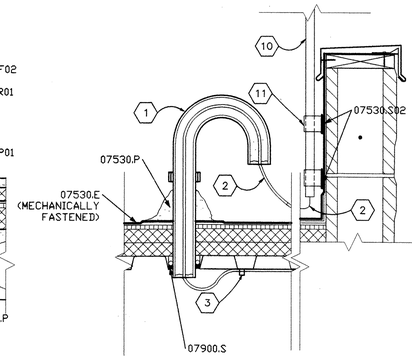

8 12 12 ROOF PENETRATION DETAIL
1 1/2"=1'-0"

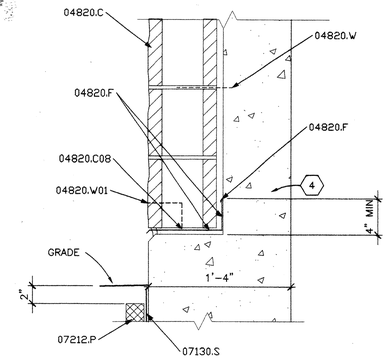

3 14 12 WALL SECTION
1 1/2"=1'-0"

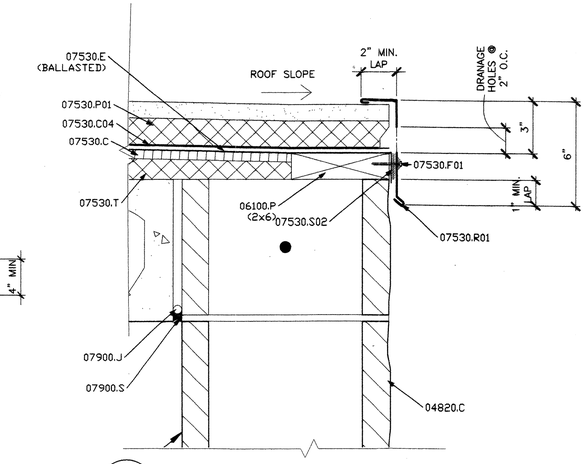

4 12 WALL SECTION
3" = 1'-0"

11,12

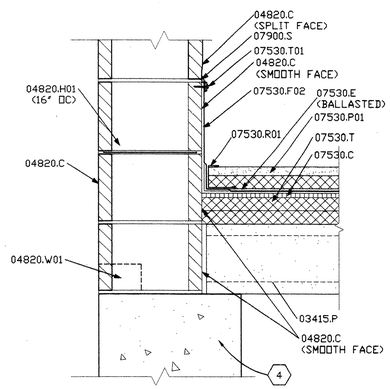

6 14 12 WALL SECTION
1 1/2"=1'-0"

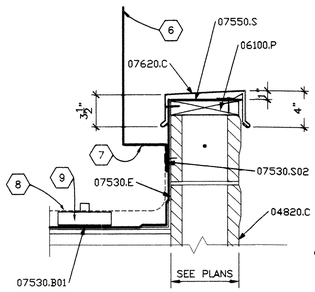

7 12 PARAPET SECTION
1 1/2"=1'-0"

12,14

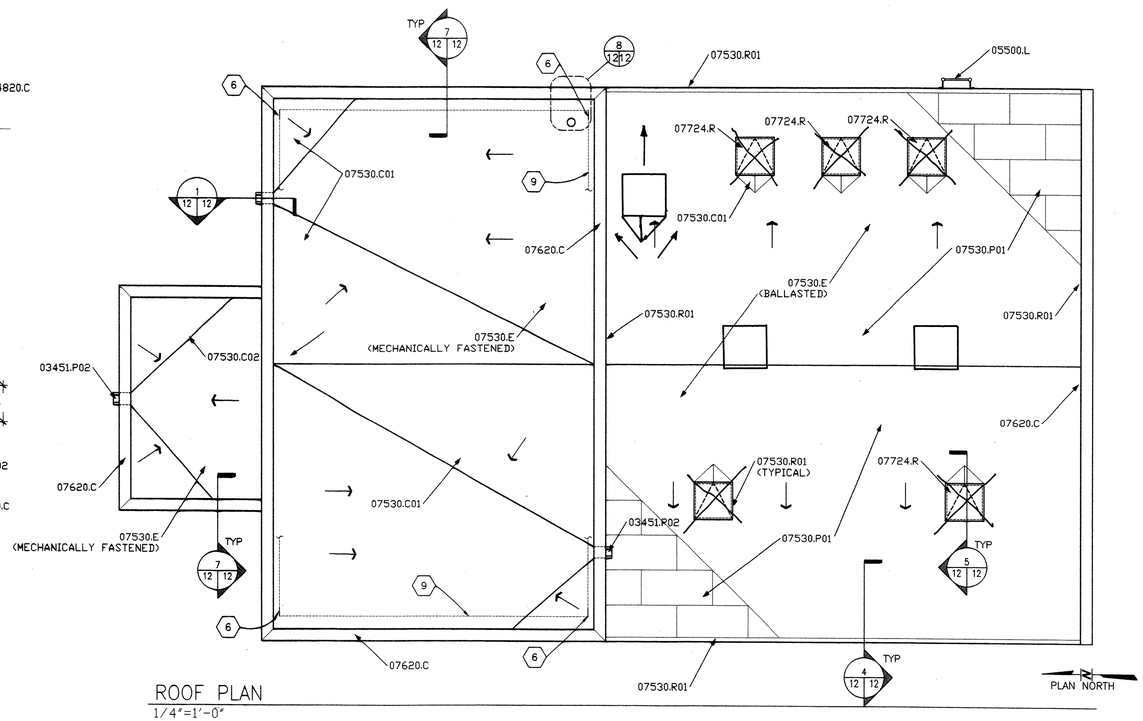

ROOF PLAN
1/4"=1'-0"

GENERAL SHEET NOTES:

A) REFERENCE FINISH FLOOR ELEVATION = 100'-0" AND REFERENCES DATUM ELEVATION, SEE CIVIL DRAWINGS FOR DATUM.
B) SOLID GROUT ALL CMU CELLS WITH REINFORCING– SEE STRUCTURAL.
C) COORDINATE VERTICAL LOCATION OF ROOF SCUPPER WITH ROOFING SYSTEM COMPONENTS PRIOR TO INSTALLATION.

REFERENCE KEYNOTES :

DIVISION 3 – CONCRETE

03300.N	NON–SHRINK GROUT
03415.P	PRECAST PLANK
03451.P02	PRECAST CONCRETE SCUPPER

DIVISION 4 – MASONRY

04820.C	CONCRETE MASONRY UNITS
04820.C08	CAVITY DRAINAGE MATERIAL
04820.F	FLASHING
04820.H01	HORIZONTAL JOINT REINFORCEMENT
04820.W	WALL TIES
04820.W01	WEEP HOLES

DIVISION 5 – METALS

05500.L	LADDER

DIVISION 6 – WOOD & PLASTICS

06100.P	PRESSURE TREATED DIMENSION LUMBER

DIVISION 7 – THERMAL & MOISTURE PROTECTION

07130.S	SHEET WATERPROOFING
07212.P	PERIMETER INSULATION
07530.B01	BONDING ADHESIVE
07530.C	COVER BOARD
07530.C01	CRICKET
07530.C02	CANT STRIP
07530.C04	CUSHION SHEET
07530.E	ELASTOMERIC MEMBRANE ROOFING
07530.F01	FASTENER
07530.F02	FLEXIBLE FLASHING
07530.P	PIPE BOOT
07530.P01	PAVERS
07530.R01	ROOF PAVER TERMINATION
07530.S	SEAM CAULK
07530.S02	SEALANT
07530.T	TAPERED BOARD INSULATION
07530.T01	TERMINATION BAR
07550.S	SEPARATION SHEET
07620.C	COPING
07724.R	ROOF HATCH
07900.J	JOINT BACKING
07900.S	SEALANT TYPE ES–1

(X) SHEET KEYNOTES :

1. 1" DIA. METAL CONDUIT
2. ANTENNA CABLE
3. WIRING CLAMP
4. SEE STRUCTURAL FOR WALL CONSTRUCTION AND REINFORCING.
5. SEE STRUCTURAL FOR WALL AND ROOF CONSTRUCTION.
6. LIGHTNING PROTECTION AIR TERMINAL– SEE ELECTRICAL.
7. LIGHTNING PROTECTION OFFSET TERMINAL BRACKET– SEE ELECTRICAL.
8. LIGHTNING PROTECTION CONDUCTOR– SEE ELECTRICAL.
9. LIGHTNING PROTECTION CABLE HOLDER – SEE ELECTRICAL.
10. ANTENNAE– SEE ELECTRICAL.
11. ANTENNAE MOUNTING BRACKET– SEE ELECTRICAL.

LEGEND:

→ INDICATES SLOPE OF ROOF

HDR

HDR Engineering, Inc.

AS BUILT INFORMATION

	DATE
CONTRACTOR	
WORK STAKED BY	DATE
WORK VERIFIED BY	DATE
ACCEPTANCE BY	DATE
FIELD VERIFICATION BY	DATE
DRAWINGS CORRECTED BY	DATE

MICRO–FILM INFORMATION

RECORDED BY	DATE
NO.	

BENCH MARKS

SURVEY INFORMATION

FIELD NOTES		
NO.	BY	DATE

STATE OF NEW MEXICO — CHARLES RICHARD CROCKETT — NEW MEXICO REGISTERED PROFESSIONAL ENGINEER — NO. 2151 — 22-JAN-02

NO.	DATE	REMARKS	BY

REVISIONS

DESIGNED BY DAA	DATE NOV 2001	
DRAWN BY JAM, PSL, JAC	DATE NOV 2001	
CHECKED BY CRC	DATE NOV 2001	

BERNALILLO COUNTY
PUBLIC WORKS DIVISION

TITLE: PAJARITO AREA VACUUM STATION
ROOF PLAN AND DETAILS

Design Review Committee | City Engineer Approval | Last Design Update | Mo./Day/Yr. | Mo./Day/Yr.

CITY ENGINEER

PROJECT NO.	MAP NO.	SHEET	OF
BC–PWD–21463 COA – 647292	Q–10, R–10	A–2	5

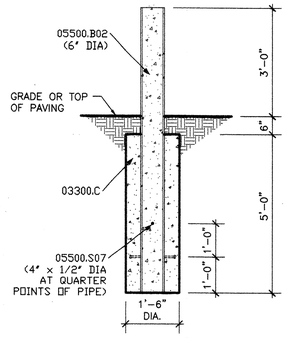

1 / 13|13 BOLLARD DETAIL
1/2"=1'-0"

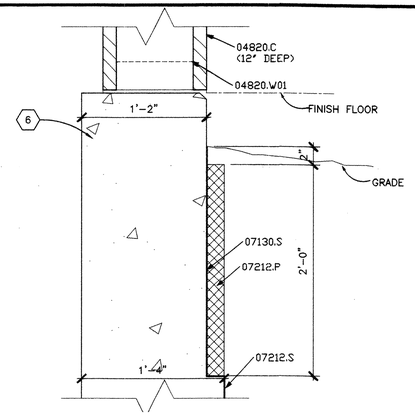

2 / 13 WALL SECTION
3/4" = 1'-0"

11,14

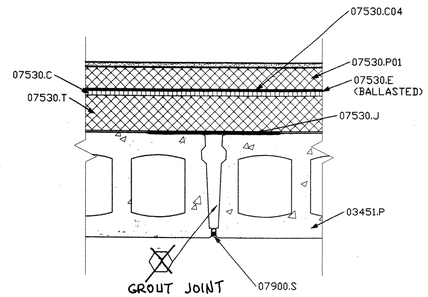

3 / 13 TYPICAL JOINT DETAIL @ LOWER LEVEL
1/2"=1'-0"

11,14

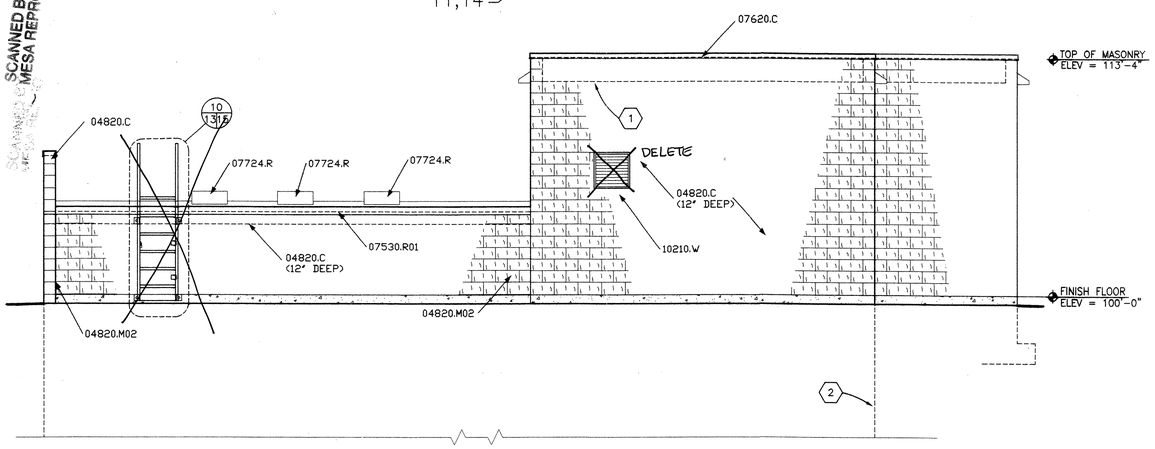

EAST ELEVATION
1/4"=1'-0"

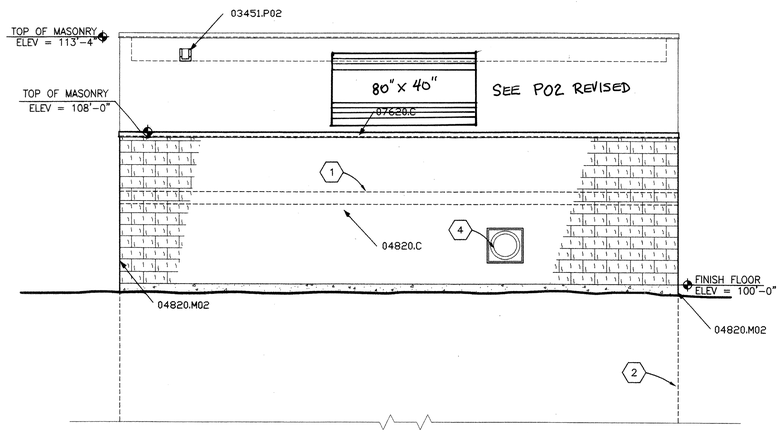

SOUTH ELEVATION
1/4"=1'-0"

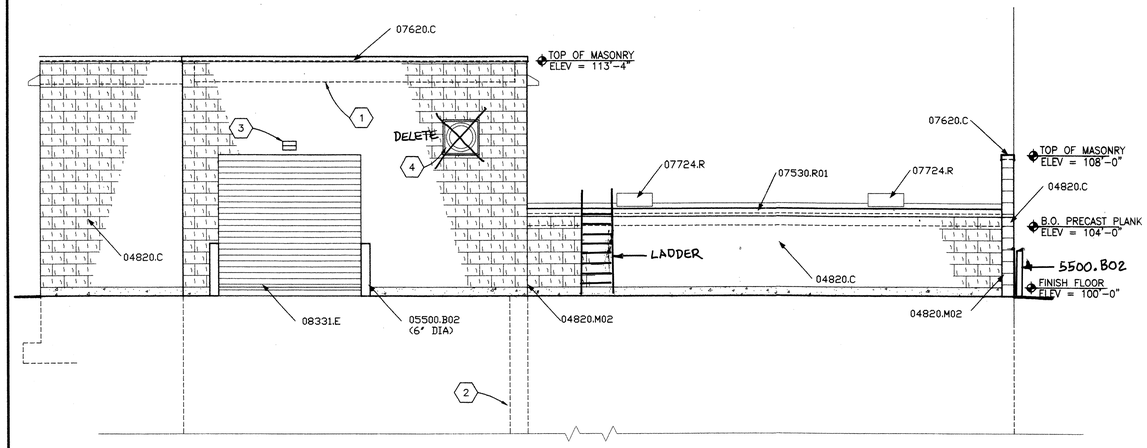

WEST ELEVATION
1/4"=1'-0"

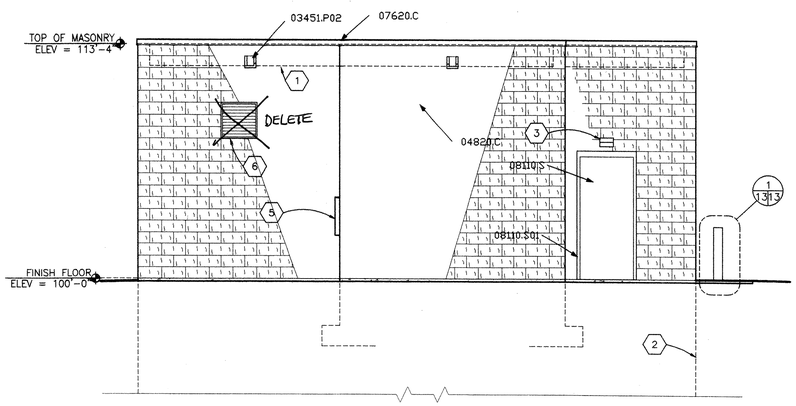

NORTH ELEVATION
1/4"=1'-0"

GENERAL SHEET NOTES:

A) REFERENCE FINISH FLOOR ELEVATION = 100'-0" AND REFERENCES DATUM ELEVATION, SEE CIVIL DRAWINGS FOR DATUM.

REFERENCE KEYNOTES :

DIVISION 3 – CONCRETE

03300.C	CAST-IN-PLACE CONCRETE
03451.P	PRECAST CONCRETE SILL
03451.P02	PRECAST CONCRETE SCUPPER

DIVISION 4 – MASONRY

04820.C	CONCRETE MASONRY UNITS
04820.M02	MASONRY CONTROL JOINT
04820.W01	WEEP HOLES

DIVISION 5 – METALS

05500.B02	BOLLARD
05500.S07	STUD ANCHOR

DIVISION 7 – THERMAL & MOISTURE PROTECTION

07130.S	SHEET WATERPROOFING
07212.P	PERIMETER INSULATION
07212.S	SHEET VAPOR RETARDER
07530.C	COVER BOARD
07530.C04	CUSHION SHEET
07530.E	ELASTOMERIC MEMBRANE ROOFING
07530.J	JOINT CUSHION
07530.P01	PAVERS
07530.R01	ROOF PAVER TERMINATION
07530.T	TAPERED BOARD INSULATION
07620.C	COPING
07724.R	ROOF HATCH
07900.S	SEALANT TYPE ES-1

DIVISION 8 – DOORS & WINDOWS

08110.S	STEEL DOOR
08110.S01	STEEL FRAME
08331.E	EXTERIOR COILING DOOR

DIVISION 10 – SPECIALTIES

10210.W	WALL LOUVER

(X) SHEET KEYNOTES :

1. LINE OF ROOF BEYOND
2. LINE OF FOUNDATION BELOW
3. WALL MOUNTED FIXTURE – SEE ELECTRICAL
4. EXHAUST FAN – SEE MECHANICAL
5. AIR CONDITIONER UNIT – SEE MECHANICAL
6. SEE PLANS FOR WALL CONSTRUCTION
7. ~~DO NOT~~ FILL VOIDS BETWEEN PLANKS WITH GROUT. PER WADE @HDR 5/19/03

AS BUILT INFORMATION

	DATE
CONTRACTOR	
WORK STAKED BY	See
INSPECTOR'S ACCEPTANCE BY	SH. 2
VERIFICATION BY FIELD	
DRAWINGS CORRECTED BY	
RECORDED BY	

MICRO-FILM INFORMATION

NO.	DATE

BENCH MARKS

SURVEY INFORMATION

FIELD NOTES

NO.	BY	DATE

SEALS

STATE OF NEW MEXICO — CHARLES RICK — No. 2161 — REGISTERED ARCHITECT — JAN-02

NO.	DATE	REMARKS	BY

REVISIONS

DESIGN

DESIGNED BY	DAA	DATE NOV 2001
DRAWN BY	JAM, PSL, JAC	DATE NOV 2001
CHECKED BY	CRG	DATE NOV 2001

HDR

HDR Engineering, Inc.

BERNALILLO COUNTY
PUBLIC WORKS DIVISION

TITLE: PAJARITO AREA VACUUM STATION
EXTERIOR ELEVATIONS

Design Review Committee | City Engineer Approval | Last Design Update | Mo./Day/Yr. | Mo./Day/Yr.

CITY ENGINEER

PROJECT NO.	BC-PWD-21463 COA – 647292	MAP NO.	Q-10, R-10	SHEET	A-3	OF	5

FINISH SCHEDULE

ROOM NO.	ROOM NAME	FLOOR	BASE	WALLS				CEILING		NOTES
				NORTH	SOUTH	EAST	WEST	FINISH	HEIGHT	
101	UPPER LEVEL	SEALED CONCRETE	–	PAINT	PAINT	PAINT	PAINT	PAINT	11' +/–	PAINT EXPOSED METAL DECK & STRUCTURAL STEEL
102	MCC	SEALED CONCRETE	–	PAINT	PAINT	PAINT	PAINT	PAINT	11' +/–	PAINT EXPOSED METAL DECK & JOISTS
103	LOWER LEVEL	SEALED CONCRETE	–	PAINT	PAINT	PAINT	PAINT	PAINT	18'–6"	– –
104	BASEMENT	SEALED CONCRETE	–	PAINT	PAINT	PAINT	PAINT	PAINT	12'–10"	– –
105	PUMP EQUIP. PIT	SEALED CONCRETE	–	PAINT	PAINT	PAINT	PAINT	PAINT	–	– –

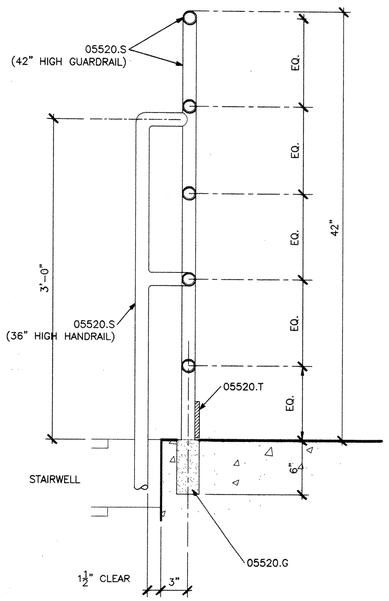

1 / 1114 RAILING DETAIL
1 1/2"=1'-0"

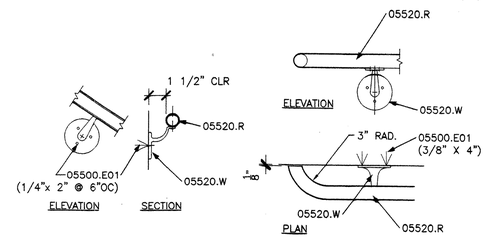

2 / 1414 HANDRAIL CONNECTION DETAILS
1 1/2"=1'-0"

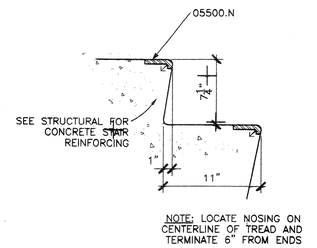

3 / 1414 STAIR RISER DETAIL
1 1/2"=1'-0"

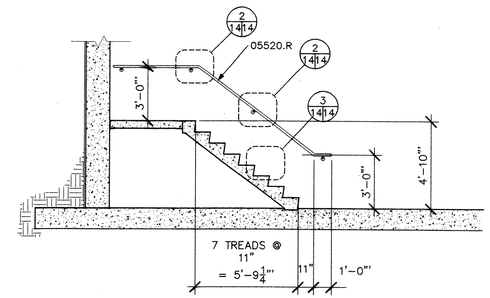

4 / 1114 STAIR SECTION
1/4"=1'-0"

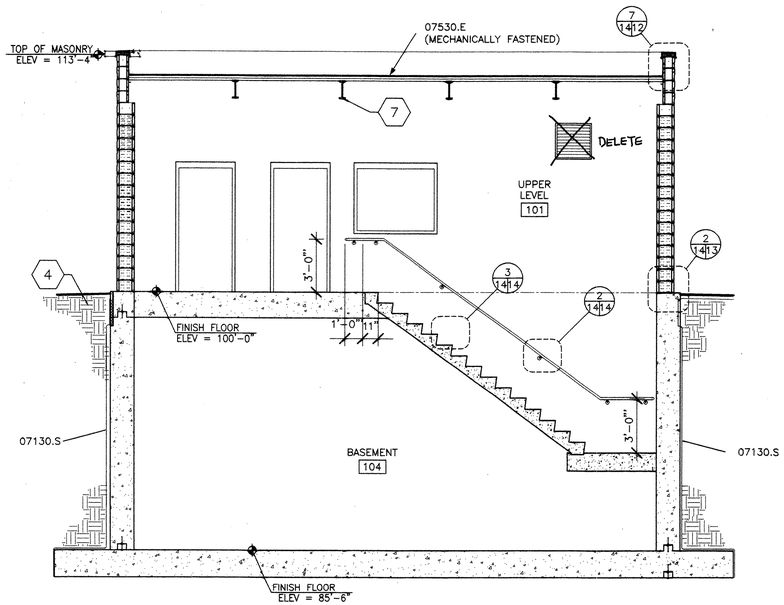

5 / 1114 BUILDING SECTION
1/4"=1'-0"

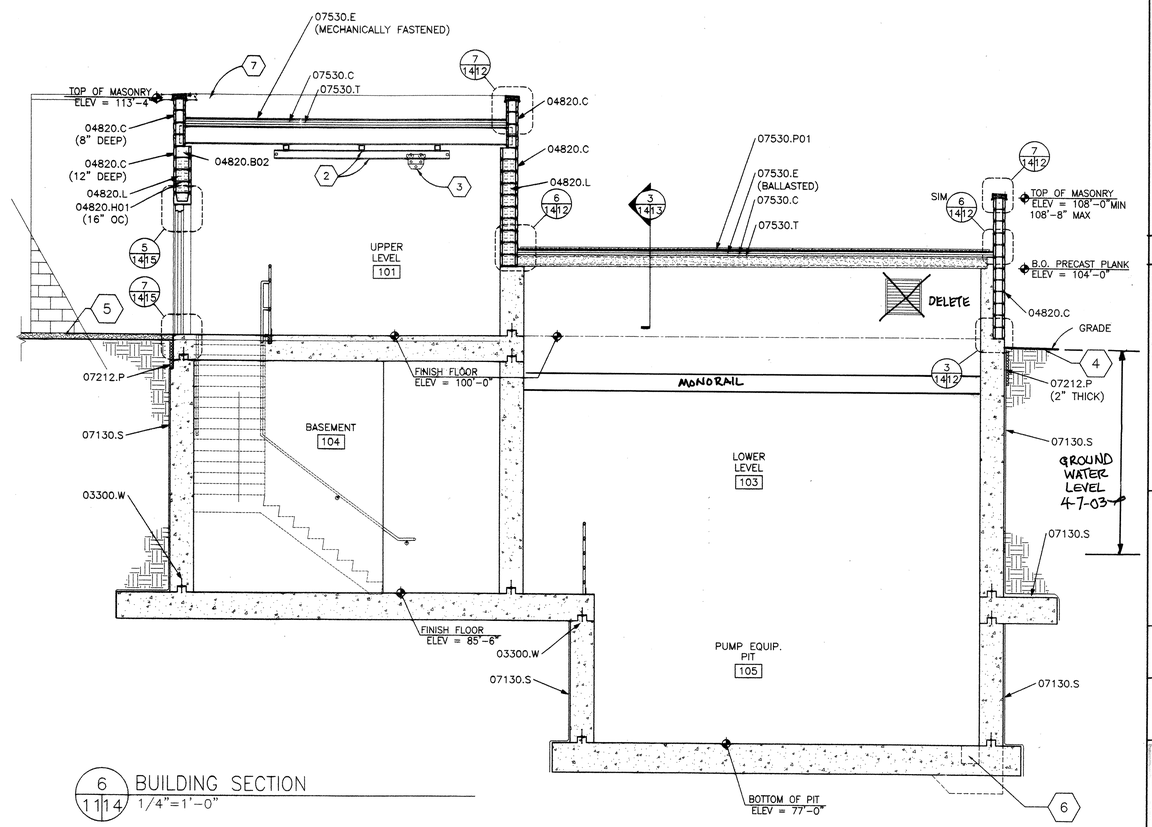

6 / 1114 BUILDING SECTION
1/4"=1'-0"

GENERAL SHEET NOTES:

A) REFERENCE ELEVATIONS ARE BASED ON FINISH FLOOR ELECATION OF 100'–0". SEE CIVIL SHEETS FOR ACTUAL FINISH FLOOR ELEVATION.

REFERENCE KEYNOTES :

DIVISION 3 – CONCRETE

03300.W WATERSTOP

DIVISION 4 – MASONRY

04820.B02 BOND BEAM
04820.C CONCRETE MASONRY UNITS
04820.H01 HORIZONTAL JOINT REINFORCEMENT
04820.L LOOSE FILL INSULATION

DIVISION 5 – METALS

05500.E01 EXPANSION ANCHOR
05500.N NOSING
05520.G GROUT POCKET
05520.R RAILING
05520.S STEEL RAILING SYSTEM
05520.T TOE BOARD
05520.W WALL BRACKET

DIVISION 7 – THERMAL & MOISTURE PROTECTION

07130.S SHEET WATERPROOFING
07212.P PERIMETER INSULATION
07530.C COVER BOARD
07530.E ELASTOMERIC MEMBRANE ROOFING
07530.P01 PAVERS
07530.T TAPERED BOARD INSULATION

SHEET KEYED NOTES :

1. SEE PLANS FOR WALL CONSTRUCTION
2. STEEL FRAMING FOR MONORAIL – SEE STRUCURAL.
3. HOIST TROLLEY COFFING ET–20–A OR EQUAL
4. ASPHALT PAVING SEE SHEET C01.
5. CONCRETE DRIVE PAD SEE SHEET C01.
6. SUMP – SEE STRUCTURAL.
7. SEE SHEET S–05 FOR STRUCTURAL STEEL.

AS BUILT INFORMATION
CONTRACTOR DATE
WORK STAKED BY
INSPECTORS ACCEPTANCE BY
ACCEPTED BY DATE
VERIFICATION BY DATE
DRAWINGS CORRECTED BY DATE
MICRO-FILM INFORMATION
RECORDED BY DATE
NO.
See SH. 2

BENCH MARKS

SURVEY INFORMATION
FIELD NOTES
NO. BY DATE

SEALS
STATE OF NEW MEXICO
CHARLES RICK GRIEGO
No. 2151
PROFESSIONAL ENGINEER
22-JAN-02

NO.	DATE	REMARKS	BY
		REVISIONS	

DESIGN
DESIGNED BY DAA DATE NOV 2001
DRAWN BY JAM, PSL, JAC DATE NOV 2001
CHECKED BY CRG DATE NOV 2001

HDR
HDR Engineering, Inc.

BERNALILLO COUNTY
PUBLIC WORKS DIVISION

TITLE: PAJARITO AREA VACUUM STATION
SECTIONS & DETAILS

Design Review Committee | City Engineer Approval | Last Design Update | Mo./Day/Yr. | Mo./Day/Yr.

PROJECT NO.	MAP NO.	SHEET	OF
BC–PWD–21463 COA – 647292	Q–10, R–10	A–4	5

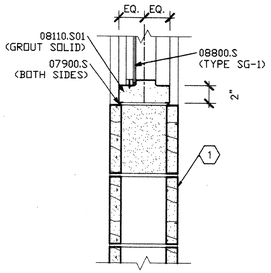

1 / 15 15 WINDOW SILL DETAIL (HEAD SIMILAR)
1 1/2"=1'-0"

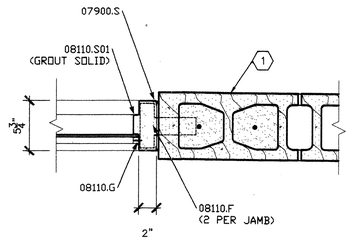

2 / 15 15 JAMB WINDOW DETAIL (HEAD SIMILAR)
1 1/2"=1'-0"

DOOR AND FRAME SCHEDULE

MARK	DOOR QTY	DOOR SIZE W	DOOR SIZE H	DOOR SIZE THK	DOOR EL	DOOR MATL	DOOR LOUVER W	DOOR LOUVER HGT	FRAME EL	FRAME MATL	FRAME DETAILS HEAD	FRAME DETAILS JAMB	FRAME DETAILS SILL	FIRE RATING LABEL	HARDWARE SET NO	HARDWARE KEYSIDE ROOM NO	NOTES
101	1	3'-0"	7'-0"	1 3/4"	F	HM	–	–	A	HM	5/15	5/15 SIM	6/15	–	HW-1	EXTERIOR	
101A	1	8'-0"	8'-0"		OC	STL	–	–	–	STL	3/15	7/15	–	–	–	EXTERIOR	
102	1	3'-0"	7'-0"	1 3/4"	G	HM	–	–	A	HM	4/15	8/15	–	–	HW-2	101	WITH 2'-4" WIDE x 2'-8" HIGH GLAZING

HM = HOLLOW METAL
STL = STEEL

WINDOW SCHEDULE (XX)

MARK	SIZE WIDTH	SIZE HEIGHT	EL	MATL	FINISH	DETAILS HEAD	DETAILS JAMB	DETAILS SILL	FIRE RATING LABEL	NOTES
A	4'-8"	4'-0"	A	HM	PAINT	1/15	2/15	1/15	–	–

GENERAL SHEET NOTES:

A) REFERENCE FINISH FLOOR ELEVATION = 100'-0" AND REFERENCES DATUM ELEVATION, SEE CIVIL DRAWINGS FOR DATUM.
B) SOLID GROUT ALL CMU CELLS WITH REINFORCING – SEE STRUCTURAL.

REFERENCE KEYNOTES :

DIVISION 1 – GENERAL DATA

01100.P OWNER FURNISHED, OWNER INSTALLED ITEM

DIVISION 3 – CONCRETE

03300.J JOINT FILLER

DIVISION 5 – METALS

05500.C01 CHEMICAL ANCHOR
05500.H01 HASP
05500.L01 LADDER SIDE RAILS
05500.L04 LADDER RUNGS
05500.L05 LADDER WALL BRACKET
05500.L10 LADDER SECURITY DOOR
05500.P02 PERFORATED METAL SHEET
05500.P03 PERFORATED METAL EDGING

DIVISION 6 – WOOD & PLASTICS

06100.A01 APA RATED WALL SHEATHING

DIVISION 7 – THERMAL & MOISTURE PROTECTION

07530.R01 ROOF PAVER TERMINATION
07900.S SEALANT TYPE ES-1
07900.S01 SEALANT TYPE ES-2

DIVISION 8 – DOORS & WINDOWS

08110.F FRAME ANCHOR
08110.G GLAZING STOP
08110.M MORTAR GROUT GUARD
08110.S STEEL DOOR
08110.S01 STEEL FRAME
08331.A ANCHOR
08331.E EXTERIOR COILING DOOR
08331.G GUIDES
08331.H HOOD ENCLOSURE
08331.W WEATHERSTRIPPING
08710.D DRIP WEATHERSTRIP
08710.S SWEEP
08710.T THRESHOLD
08800.S SAFETY GLASS

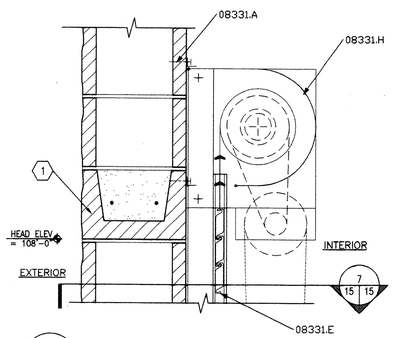

3 / 11 15 HEAD DETAIL
1 1/2"=1'-0"

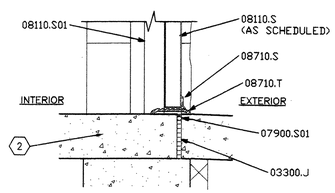

6 / 15 15 SILL DETAIL
1 1/2"=1'-0"

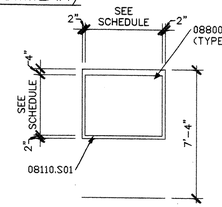

WINDOW ELEVATION
SCALE: 1/4" = 1'-0"

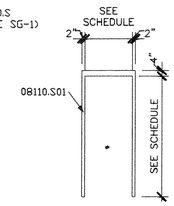

FRAME ELEVATIONS
SCALE: 1/4" = 1'-0"

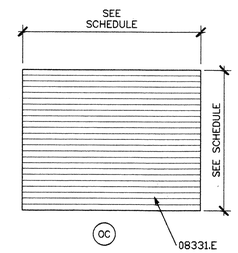

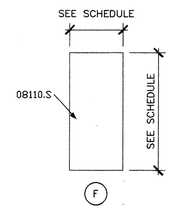

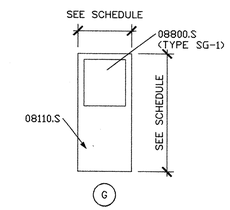

DOOR ELEVATIONS
SCALE: 1/4" = 1'-0"

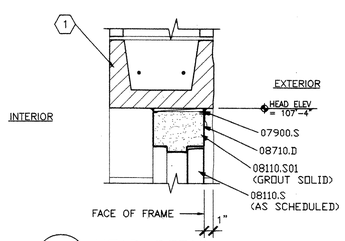

5 / 11 15 HEAD DETAIL
1 1/2"=1'-0"

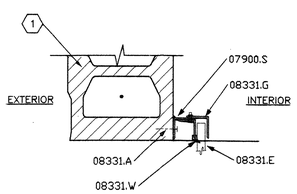

7 / 14 15 JAMB DETAIL
1 1/2"=1'-0"

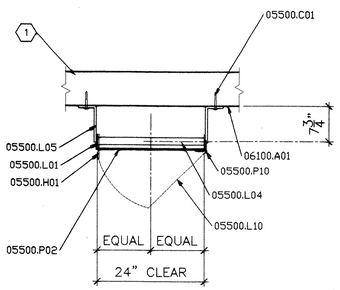

9 / 11 15 PLAN VIEW SECTION AT LADDER
3/4"=1'-0"

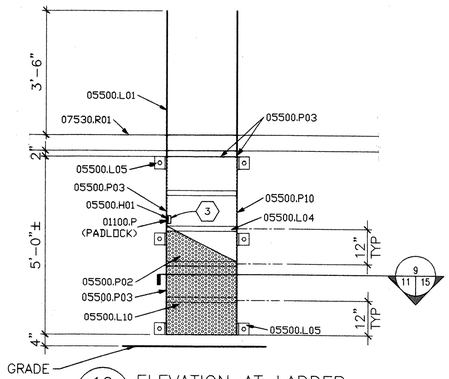

10 / 13 15 ELEVATION AT LADDER
1/2"=1'-0"

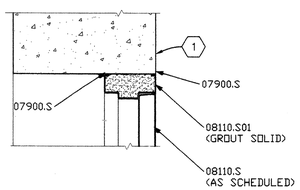

4 / 15 15 HEAD DETAIL
1 1/2"=1'-0"

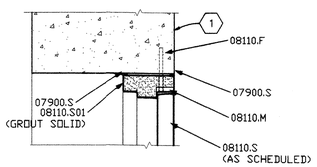

8 / 15 15 JAMB DETAIL
1 1/2"=1'-0"

(X) SHEET KEYNOTES :

1. SEE STRUCTURAL FOR WALL CONSTRUCTION AND REINFORCING
2. SEE STRUCTURAL FOR SLAB AND FOUNDATION CONSTRUCTION
3. OWNER FURNISHED, OWNER INSTALLED PADLOCK.

HDR

HDR Engineering, Inc.

AS BUILT INFORMATION — CONTRACTOR / WORK STAKED BY / INSPECTOR'S ACCEPTANCE BY / FIELD VERIFICATION BY / DRAWINGS CORRECTED BY — DATE — See Sh. 2 — MICRO-FILM INFORMATION — RECORDED BY — DATE — NO.

BENCH MARKS

SURVEY INFORMATION — FIELD NOTES — NO. — BY — DATE

SEALS — STATE OF NEW MEXICO — CHARLES RICK GREEN — No. 2151 — REGISTERED ARCHITECT — 2-2-02

NO.	DATE	REMARKS	BY

REVISIONS

DESIGN		
DESIGNED BY DAA	DATE NOV 2001	
DRAWN BY JAM, PSL	DATE NOV 2001	
CHECKED BY CRG	DATE NOV 2001	

BERNALILLO COUNTY
PUBLIC WORKS DIVISION

TITLE: PAJARITO AREA VACUUM STATION
WINDOW AND DOOR SCHEDULES AND DETAILS

Design Review Committee — City Engineer Approval — Last Design Update — Mo./Day/Yr. — Mo./Day/Yr.

PROJECT NO.	BC-PWD-21463 COA – 647292	MAP NO. Q-10, R-10	SHEET A-5	OF 5

SHEET 15 OF 25

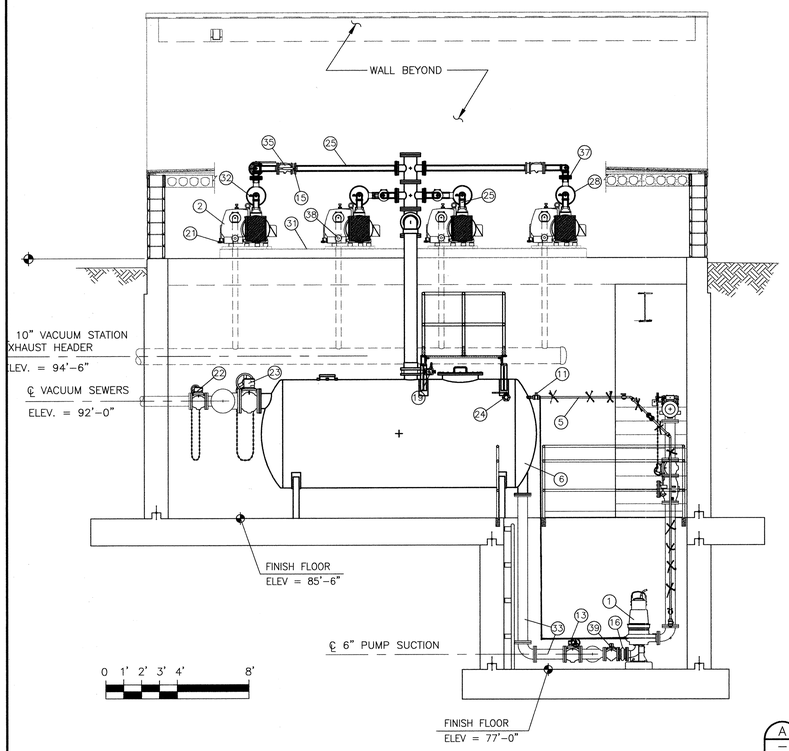

BUILDING SECTION AT LOWER LEVEL LOOKING NORTH
SCALE: 1/4" = 1'-0"

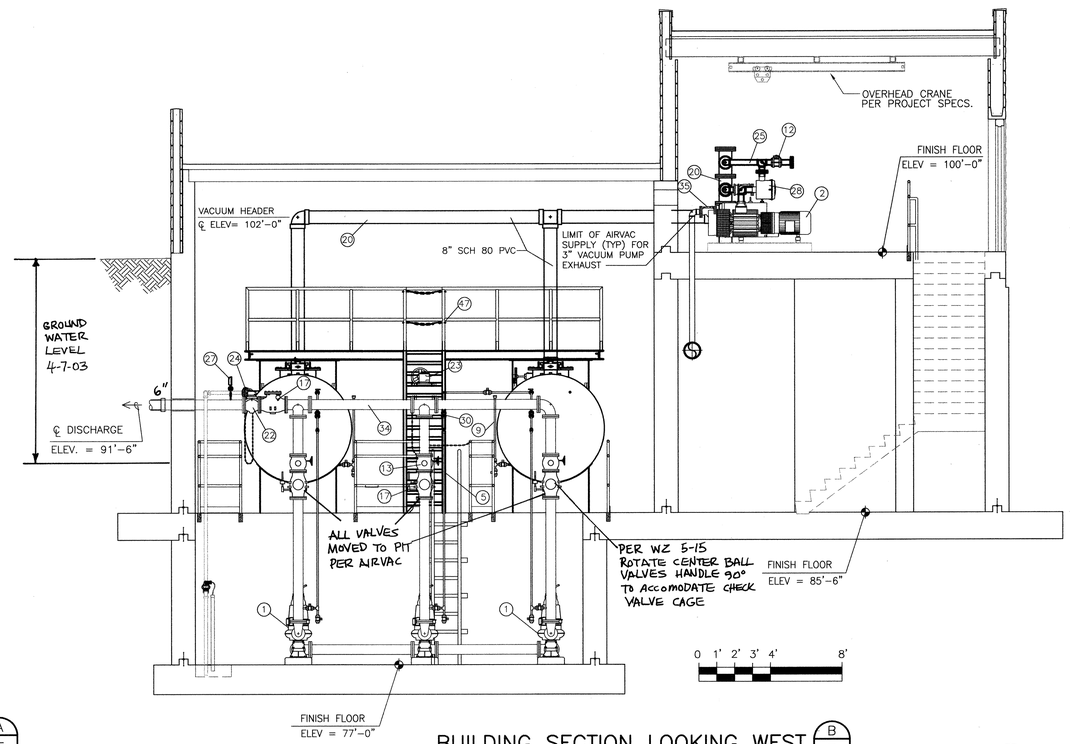

BUILDING SECTION LOOKING WEST
SCALE: 1/4" = 1'-0"

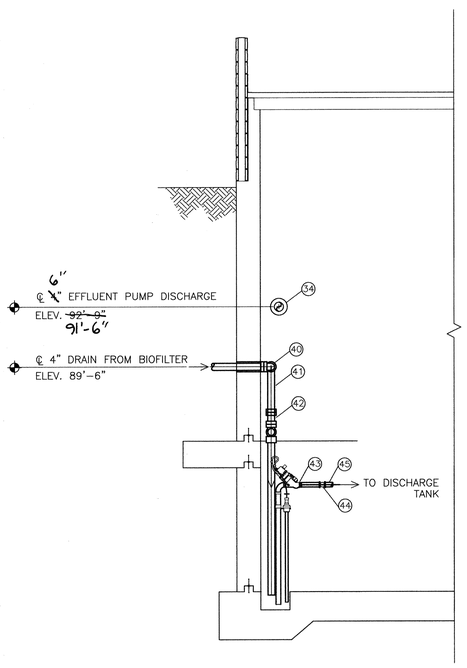

BUILDING SECTION (SE CORNER) LOOKING SOUTH
SCALE: 1/4" = 1'-0"

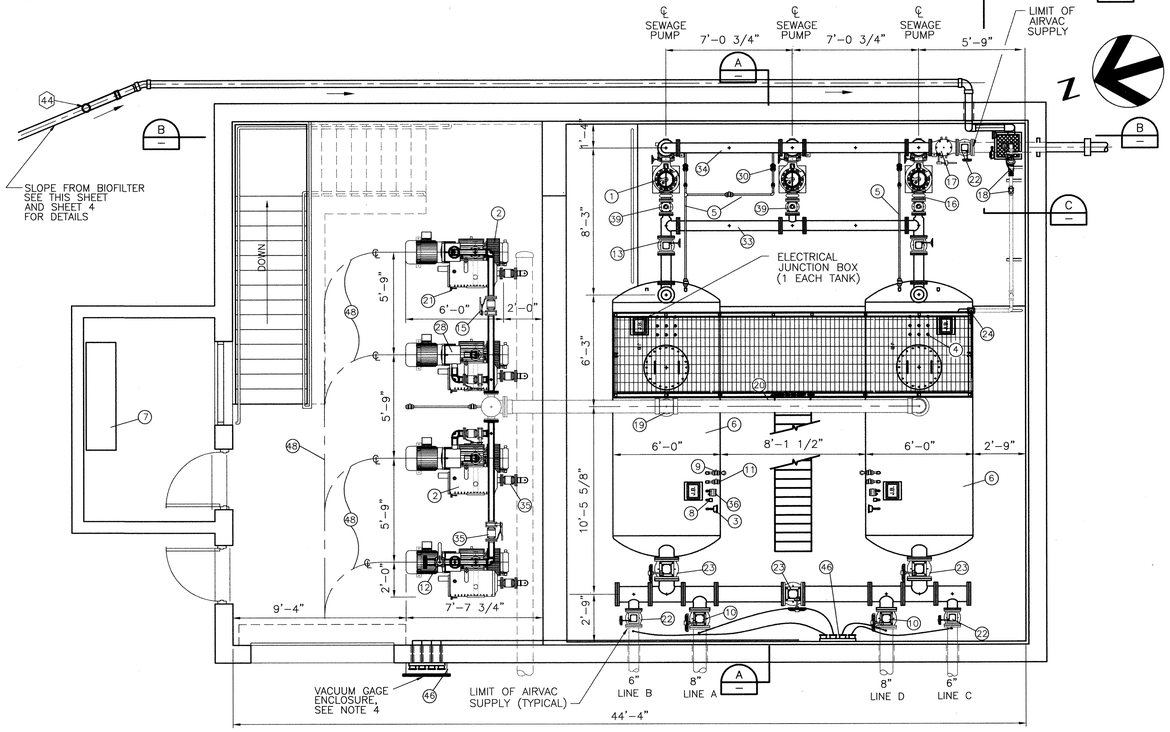

EQUIPMENT PLAN
SCALE: 1/4" = 1'-0"

GENERAL SHEET NOTES:

1. REFERENCE FINISH FLOOR ELEVATION 4919.0 = 100'-0" AND REFERENCES DATUM ELEVATION SHOWN ON SHEET 3.
2. VACUUM GAGE LINES TO SLOPE TO COLLECTION SYSTEM PIPE.
3. SPECIFIC LOCATIONS AND ANCHORAGE OF VACUUM EQUIPMENT AND SEWER PIPING INTO STATION SUBJECT TO EQUIPMENT SUPPLIED. SUBMIT DIMENSIONAL PLAN OF ALL EQUIPMENT PRIOR TO CONSTRUCTION.
4. VAS PIPING ELEVATIONS SUBJECT TO EQUIPMENT FURNISHED. COORDINATED ELEVATION W/MANUFACTURER PRIOR TO CONSTRUCTION.
5. VACUUM GAGE ENCLOSURE – 3' x 1'-6" x 9" DEEP, 12 GA. STEEL, W/ BULLET-PROOF GLASS FRONT BOLTED TO 2" FLANGE LIP. ANCHOR TO WALL W/ CHEMICAL ANCHORS, 3" MIN. EMBEDMENT. PROVIDE 8" DIAM. (0" – 30") VACUUM GAGES AND CONVENIENCE OUTLET WITHIN ENCLOSURE. PROVIDE 4 – 2" SLEEVES THROUGH WALL FOR PIPING AND ELECTRICAL WIRING.
6. PROVIDE VALVED AND BLIND FLANGED CONNECTION FOR PORTABLE VACUUM PUMP CONNECTION DURING POWER FAILURES. CONNECTION TYPICAL FOR ONE VACUUM DISCHARGE LINE ONLY.

SHEET KEYED NOTES : (X)

#	DESCRIPTION	QTY
1	CENTRIFUGAL SEWAGE PUMP	3
2	VACUUM PUMP	4
3	0–30" HG. VACUUM GAUGE	2
4	LEVEL SENSING PROBES	14
5	1" STAINLESS STEEL EQUALIZING LINE ASSEMBLY	3
6	3000 GALLON STEEL COLLECTION TANK	2
7	MOTOR CONTROL PANEL	1
8	0–30" VACUUM SWITCH #836–C60A	2
9	1" CLEAR PVC SITE TUBE ASSEMBLY	2
10	8" FLANGED FULL PORT PLUG VALVE	2
11	1" PVC FULL PORT PLUG VALVE	15
12	3" FULL PORT PLUG VALVE	1
13	6" FLANGED FULL PORT PLUG VALVE	5
14	PIPE SUPPORT AS REQUIRED	
15	3" BUTTERFLY VALVE, LEVER OPERATED	4
16	4" RUBBER VIBRATION ISOLATORS	3
17	6" FLANGED CHECK VALVE	4
18	2" SUMP VALVE WITH 2" CHECK VALVE	1
19	8" MANUALLY OPERATED BUTTERFLY VALVE	2
20	8" D.I.P./SCH 80 PVC VACUUM HEADER ASSEMBLY	1
21	1/2" BRASS BALL VALVES	4
22	6" FLANGED FULL PORT PLUG VALVE	3
23	10" FLANGED FULL PORT PLUG VALVE	3
24	2" FULL PORT PLUG VALVE	2
25	3" PUMP INLET AND OUTLET ASSEMBLIES	4
26	1/2" VACUUM GAUGE ASSEMBLY	1
27	COMPOUND GAUGE ASSEMBLY	1
28	VACUUM PUMP INLET FILTER CANISTER	4
29	1" D.I. VACUUM PUMP DRAIN LINE ASSEMBLY	4
30	1" PVC SIGHT GLASS/ FLOW INDICATOR	3
31	STRUCTURAL STEEL SKID DECK	1
32	1/4" CHROME PLATED BALL VALVES	4
33	4" X 6" D.I. PUMP SUCTION ASSEMBLY	2
34	6" D.I. SEWAGE PUMP DISCHARGE ASSEMBLY	3
35	3" FLANGED SWING CHECK VALVE	8
36	ALPHALINE PRESSURE TRANSMITTER	2
37	3" CAST IRON COMPANION FLANGE	12
38	CRANKCASE HEATERS	4
39	4" FLANGED FULL PORT PLUG VALVE	3
40	4" COMPOST FILTER DRAIN	1
41	4" DRAIN TRAP	1
42	4" COUPLING	2
43	2" SUMP VALVE	2
44	4" CLEAN OUT	1
45	VACUUM VALVE PIPING	1
46	VACUUM GAGES	8
47	CAT WALK	1
48	OVERHEAD CRANE/HOIST PATH	

AS BUILT INFORMATION
CONTRACTOR DATE
WORK STAKED BY DATE
INSPECTOR'S ACCEPTANCE BY DATE
FIELD VERIFICATION BY DATE
DRAWINGS CORRECTED BY DATE
See SH. 2
MICRO–FILM INFORMATION
RECORDED BY DATE
NO.

BENCH MARKS

SURVEY INFORMATION
FIELD NOTES
NO. BY DATE

ENGINEER'S SEAL

NO.	DATE	REMARKS	BY
		REVISIONS	
		DESIGN	
		DESIGNED BY WFZ DATE NOV 2001	
		DRAWN BY RAG DATE NOV 2001	
		CHECKED BY WFZ DATE NOV 2001	

HDR
HDR Engineering, Inc.

BERNALILLO COUNTY
PUBLIC WORKS DIVISION

TITLE: PAJARITO AREA VACUUM STATION
EQUIPMENT & SECTION PLAN
BELOW AND AT GRADE LEVEL

Design Review Committee | City Engineer Approval | Last Design Update | Mo./Day/Yr. | Mo./Day/Yr.
APPROVED SEP 12 2012 CITY ENGINEER

PROJECT NO.	MAP NO.	SHEET	OF
TS – 01 – 13 COA – 647291	Q–10, R–10	P–01	3

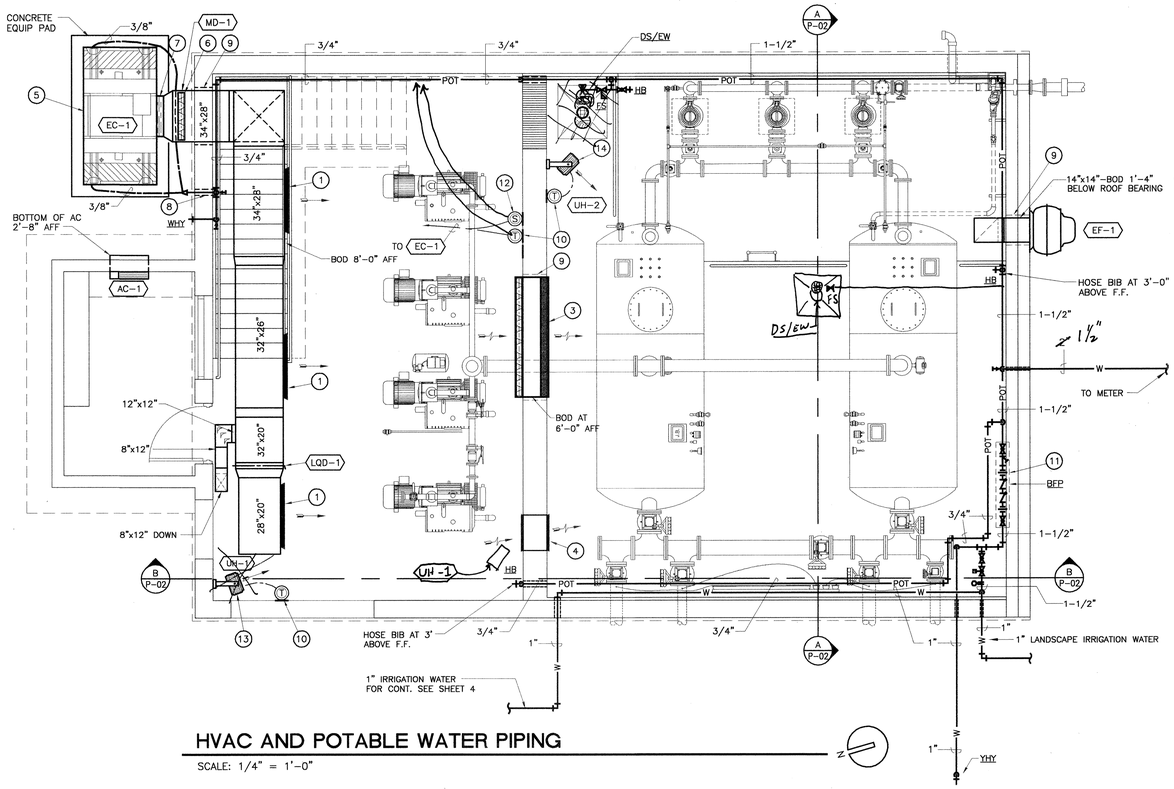

HVAC AND POTABLE WATER PIPING

SCALE: 1/4" = 1'-0"

General Notes

A. ALL PIPES PENETRATING THE WALLS BELOW GRADE AND ANY FLOOR SLAB SHALL BE SEALED WITH LINK-SEAL.

B. INSTALL TURNING VANES IN ALL DUCT ELBOWS.

C. ALL PIPES PENETRATING BUILDING WALL, NOT ADJACENT TO EARTH, SHALL BE RUN IN A SLEEVE AND SEALED AROUND THE PIPE AND SLEEVE.

Keyed Notes

1. DL-1 3,670 CFM, 42"x15" NECK.
2. SR-1 500 CFM, 8"x24" NECK
3. L-1 10,510 CFM, 80"x40" NECK. INTERLOCK DAMPER WITH EC-1
4. TG-1 24"x24" NECK.
5. INSTALL THE EVAPORATIVE COOLER ON AN EQUIPMENT SUPPORT PER DETAIL 1/P-02A.
6. INTERLOCK THE MOTORIZED DAMPER WITH THE EVAPORATIVE COOLER BLOWER.
7. INSTALL A FLEXIBLE CONNECTOR WITH SUN SHIELD PER DETAIL 2/P-02A.
8. RUN A 1/2" WATER MAKE-UP LINE THRU THE WALL AT 24" ABOVE FINISHED GRADE, INSTALL A REDUCER AND RUN 3/8" WATER MAKE-UP LINES TO THE EVAPORATIVE COOLER FLOAT VALVE.
9. RUN THE DUCT THRU THE WALL IN A SLEEVE. SEAL AROUND THE DUCT AND SLEEVE.
10. MOUNT THERMOSTAT ON A 1" THICK, WOOD INSULATED BLOCK.
11. INSTALL THE BACK FLOW PREVENTER ON THE WALL AT 4'-0" ABOVE FINISHED FLOOR TO CENTER LINE OF THE ASSEMBLY.
12. INSTALL THE EVAPORATIVE COOLER PUMP SWITCH ON THE WALL WITH A "SUMMER" PLAQUE ABOVE AND A "WINTER" PLAQUE BELOW
13. MOUNT UNIT HEATER ON WALL AT 8'-0" AFF TO BOTTOM OF UNIT.
14. MOUNT UNIT HEATER ON WALL AT 10'-6" AFF TO BOTTOM OF UNIT.

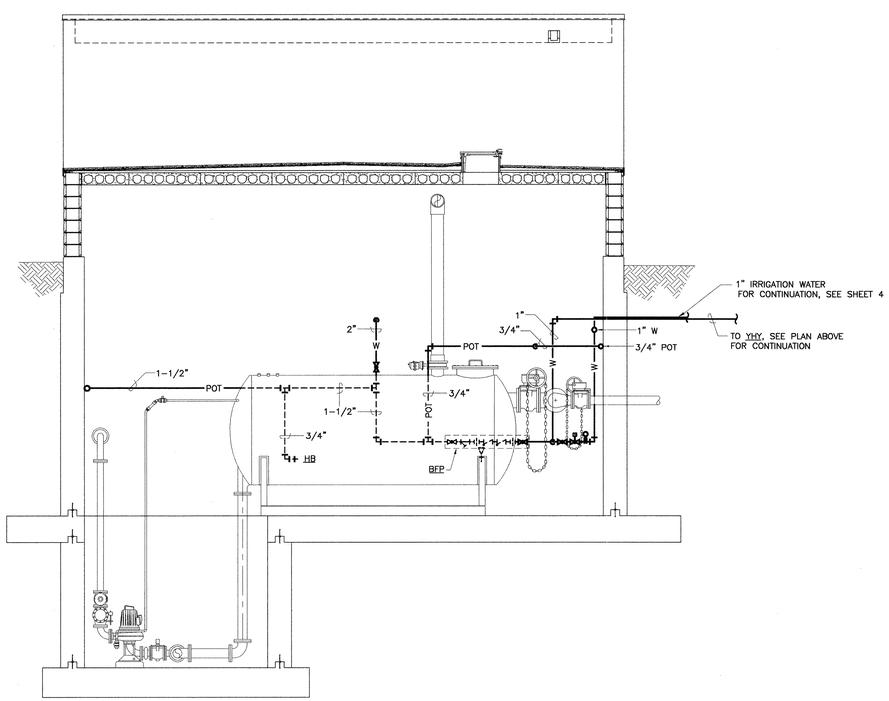

BUILDING SECTION "A" AT LOWER LEVEL LOOKING SOUTH

SCALE: 1/4" = 1'-0"

0 1 2.5 5 10 FEET 15

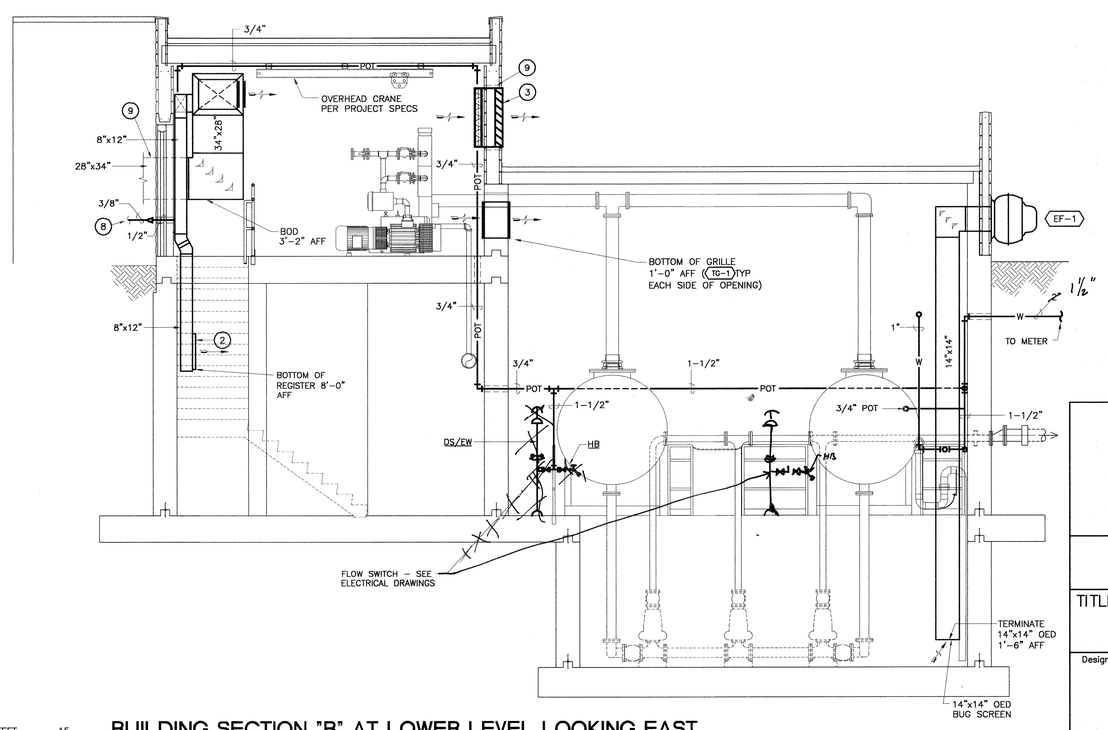

BUILDING SECTION "B" AT LOWER LEVEL LOOKING EAST

SCALE: 1/4" = 1'-0"

HDR

HDR Engineering, Inc.

BERNALILLO COUNTY
PUBLIC WORKS DIVISION

TITLE: PAJARITO AREA VACUUM STATION MECHANICAL PLAN AND SECTIONS

Design Review Committee	City Engineer Approval	Last Design Update	Mo./Day/Yr.	Mo./Day/Yr.

PROJECT NO.	TS - 01 - 13 COA - 647291	MAP NO. Q-10, R-10	SHEET P-02	OF 3

ENGINEER'S SEAL

08/02/2002

NO.	DATE	REMARKS	BY
		REVISIONS	
		DESIGN	
		DESIGNED BY WFZ	DATE NOV 2001
		DRAWN BY RAG	DATE NOV 2001
		CHECKED BY WFZ	DATE NOV 2001

AS BUILT INFORMATION

		DATE
CONTRACTOR		
WORK STAKED BY	See	
INSPECTOR'S ACCEPTANCE BY	SHE	
VERIFICATION BY CONTRACTOR		
CORRECTED BY		

MICRO-FILM INFORMATION

RECORDED BY	DATE
NO.	

BENCH MARKS

SURVEY INFORMATION

NO.	FIELD NOTES BY	DATE

SCANNED BY MESA REPRO

LOUVER PERFORMANCE DATA

MARK NO.	LOCATION	LOUVER DIM WIDTH	LOUVER DIM HEIGHT	CFM	MATERIAL	FINISH	FREE AREA SQ FT	WATER PENETRATION	SP DROP INS WC	UNIT ILLUSTRATED	REMARKS
LV-1	UPPER LEVEL	24"	24"	1000	ALUM	SEE SPEC SECT 15890	1.88	0	0.05	RUSKIN ELF 375	

DAMPER PERFORMANCE DATA

MARK NO.	LOCATION	DIMENSION WIDTH	DIMENSION HEIGHT	TYPE OPENING	SERVES	TYPE SERVICE	UNIT ILLUSTRATED	REMARKS
MD-1	UPPER LEVEL	24"	24"	WALL	EF-1	INTAKE	RUSKIN CD-50	
MD-2	UPPER LEVEL	12"	12"	WALL	EF-1	INTAKE	RUSKIN CD-50	

DIFFUSERS, REGISTERS AND GRILLES PERFORMANCE DATA

MARK NO.	MOUNTING	TYPE	MAX SP INS WC	MAX NC	SIZE	MATERIAL	UNIT ILLUSTRATED	ACCESSORIES	REMARKS
R-1	EXPOSED DUCT	SUPPLY	0.03	25	AS SHOWN	ALUM	ANEMOSTAT X2HO	OPPOSED BLADE DAMPER	
G-1	WALL	TRANSFER	0.03	25	AS SHOWN	ALUM	ANEMOSTAT X3HS	-- --	

FAN PERFORMANCE DATA

MARK NO.	LOCATION	TYPE	CFM	SP DROP INS WC	RPM	STATIC EFF %	MOTOR HP	MOTOR VOLTS	MOTOR PH	UNIT ILLUSTRATED	REMARKS
EF-1	UPPER LEVEL	WALL MOUNTED CENTRIFUGAL	1000	0.375	982	49	0.167	115	1	LOREN COOK ACW 135W 2B	SPARK-RESISTANT CONSTRUCTION
EF-2	LOWER LEVEL	WALL MOUNTED CENTRIFUGAL	2000	0.375	920	45	0.33	115	1	LOREN COOK ACW 165W 4B	SPARK-RESISTANT CONSTRUCTION

ELECTRIC MAKE-UP AIR UNIT PERFORMANCE DATA

MARK NO.	LOCATION	CFM	CAPACITY KW	TEMP. RISE °F	STAGES	MOUNTING	EXTERNAL SP IN WC	MOTOR HP	MOTOR VOLTS	MOTOR PH	UNIT ILLUSTRATED	REMARKS
MU-1	OUTSIDE CONTROL RM	2000	40	70	4	CONCRETE EQUIP PAD	0.375	1	460	3	HASTINGS SBE-112	W/ INTAKE HOOD, INTAKE DAMPER & FILTER BOX

PACKAGED TERMINAL AIR CONDITIONING UNIT

MARK NO.	LOCATION	EER	CAPACITY BTUH	SUCTION TEMP DEG F	AMBIENT TEMP DEG F	ELECTRICAL AMPS	ELECTRICAL VOLTS	ELECTRICAL PH	REFRIG	UNIT ILLUSTRATED	REMARKS
AC-1	CONTROL ROOM	9.5	6000	45	95	5.7	115	1	R-22	GENERAL ELECTRIC AJCS06CLA	

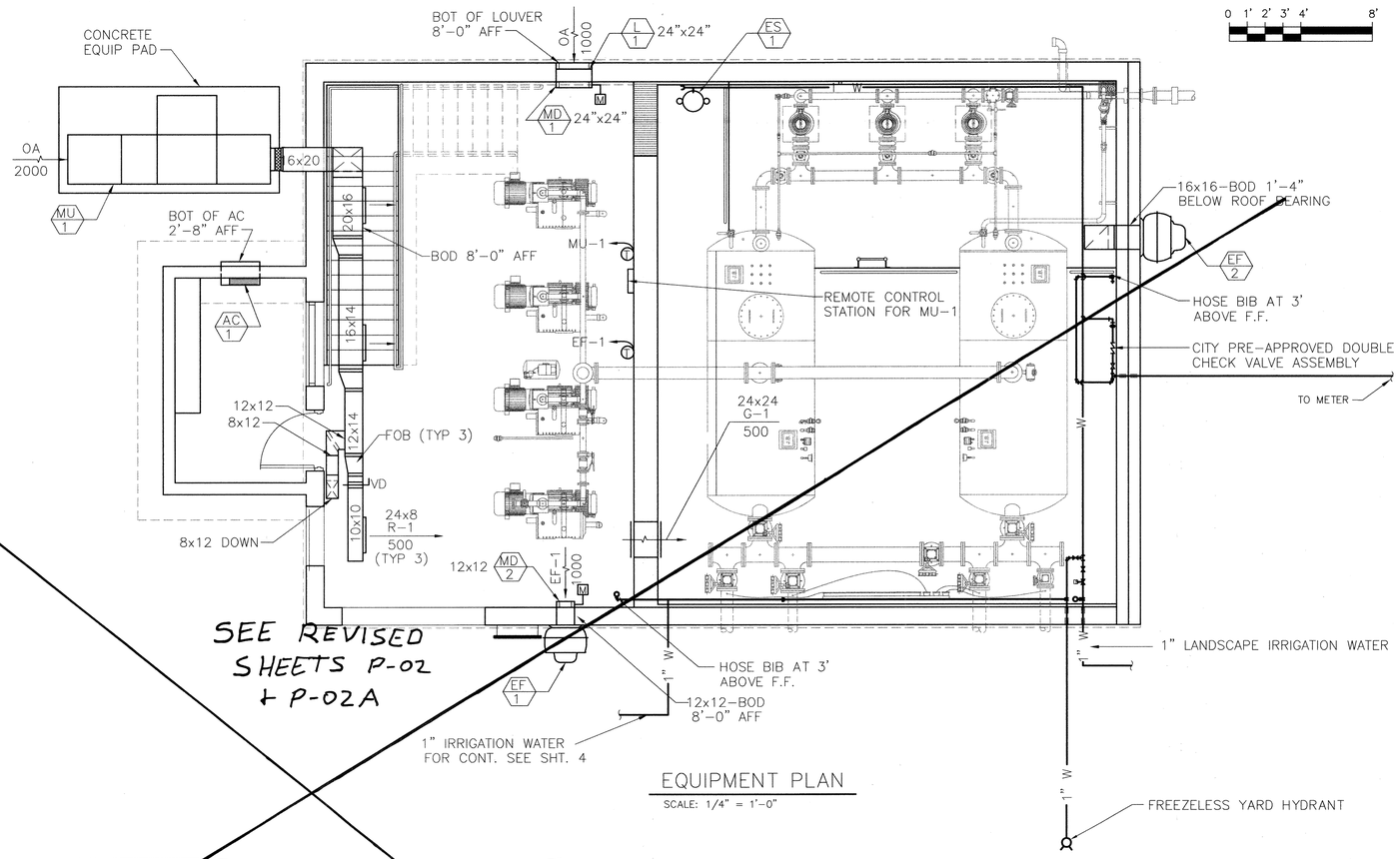

SEE REVISED SHEETS P-02 + P-02A

EQUIPMENT PLAN

SCALE: 1/4" = 1'-0"

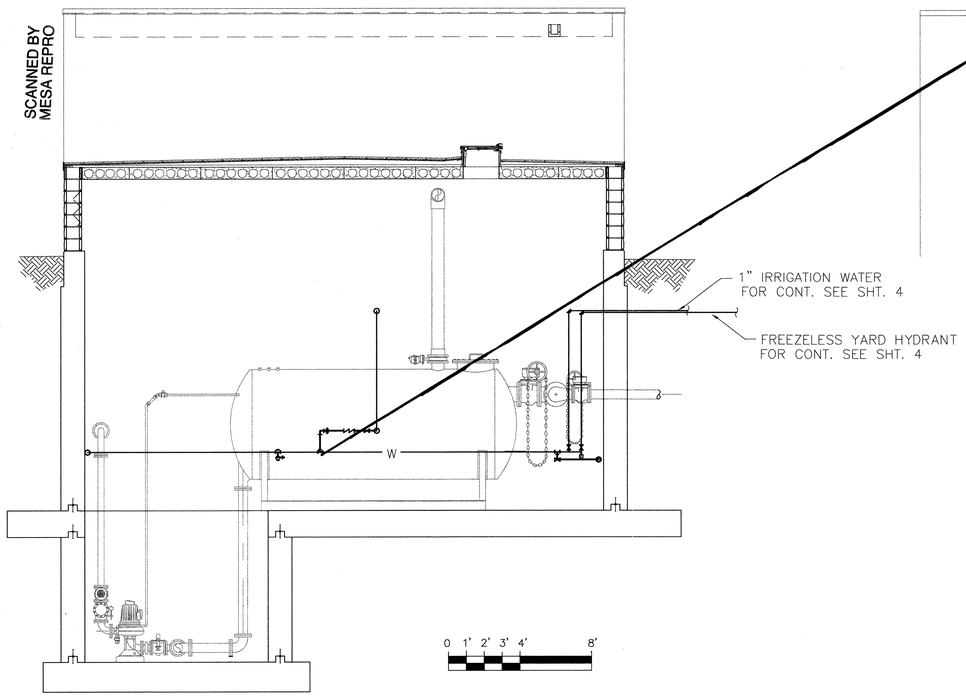

BUILDING SECTION AT LOWER LEVEL LOOKING SOUTH

SCALE: 1/4" = 1'-0"

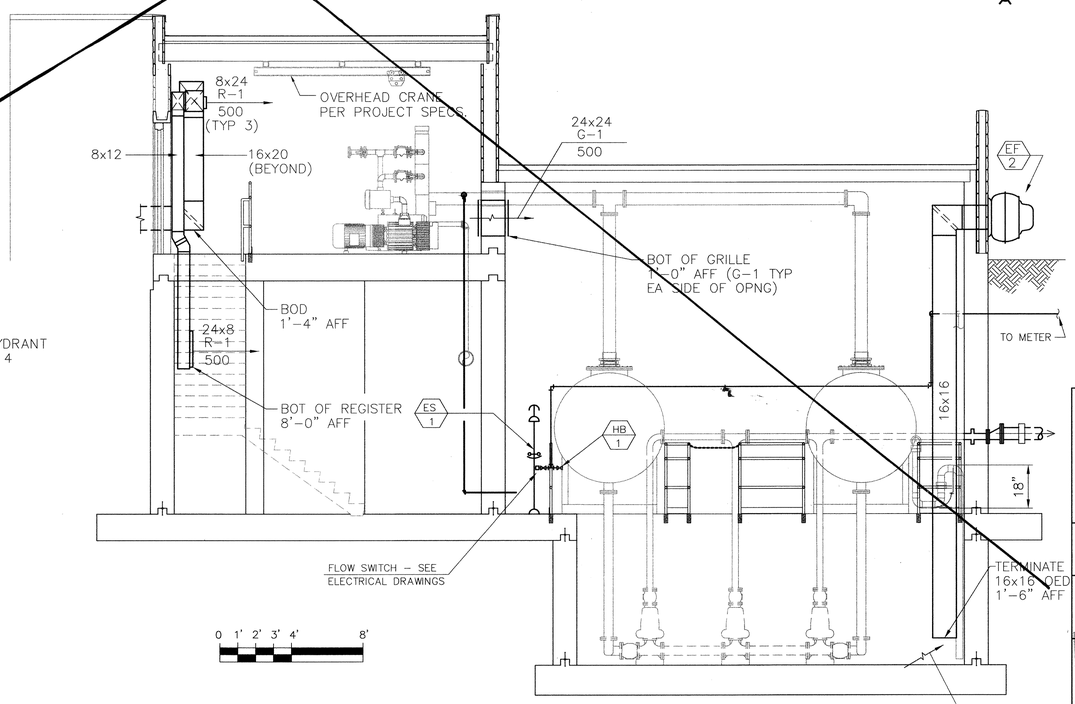

BUILDING SECTION AT LOWER LEVEL LOOKING EAST

SCALE: 1/4" = 1'-0"

SCANNED BY MESA REPRO

AS BUILT INFORMATION
CONTRACTOR DATE
WORK STAKED BY DATE
See
INSPECTED BY DATE
ACCEPTANCE BY DATE
Sh. 2
FIELD VERIFICATION BY DATE
DRAWINGS CORRECTED BY DATE
MICRO-FILM INFORMATION
RECORDED BY DATE
NO.

BENCH MARKS

SURVEY INFORMATION
FIELD NOTES
NO. BY DATE

ENGINEER'S SEAL

NO.	DATE	REVISIONS REMARKS	BY
		DESIGN	
		DESIGNED BY WFZ DATE NOV 2001	
		DRAWN BY RAG DATE NOV 2001	
		CHECKED BY WFZ DATE NOV 2001	

HDR

HDR Engineering, Inc.

BERNALILLO COUNTY
PUBLIC WORKS DIVISION

TITLE: PAJARITO AREA VACUUM STATION
MECHANICAL PLAN
AND SECTIONS

Design Review Committee: SEP 11 2002 DESIGN REVIEW COMMITTEE
City Engineer Approval: SEP 12 CITY
Cost Design Update | Mo./Day/Yr. | Mo./Day/Yr.

PROJECT NO.	MAP NO.	SHEET	OF
TS - 01 - 13 COA - 647291	Q-10, R-10	P-02	3

Replaced.

SCANNED BY
MESA REPRO

EQUIPMENT SCHEDULE

SYMBOL	DESCRIPTION
EC-1	EVAPORATIVE COOLER: Industrial, side discharge, evaporative cooler consisting of a fan section, and two direct cooling sections. All metal parts except blower shaft and pulley shall be fabricated from hot-dipped galvanized steel. All of the steel components except for the fan shall be chemically treated and covered with an electrostatically applied polyester-epoxy power-based finish. Fan shall be mounted to a solid steel shaft riding on permanently lubricated, sealed, pillow block ball bearings. Blower drive shall have adjustable sleeves. Each direct cooling section shall consist of 12" thick Celedek media, sump, water distribution system and inlet louver. Unit shall be furnished with high efficiency blower motor, water bleed-off kit, low voltage T-stat with subbase, all required relays, clear locking guard, disconnect, and a 24 VAC relay for control of relief dampers. Model numbers are Arvin.

Symbol	Model	CFM	ESP	H.P.	Volt/Phase	Weight
EC-1	MS625/DM120(2)	11,510	0.60"	5	480/3	950 lbs.

SYMBOL	DESCRIPTION
UH-1 and UH-2	ELECTRIC UNIT HEATER: Horizontal air flow unit heater complete with 18 gauge steel cabinet with baked enamel finish, individually adjustable louvers, wall mounting bracket, draw thru unit, metal sheath aluminum-finned heating elements, automatic reset thermal over-heat protection, inlet louvers, totally enclosed, all angle motor with built-in thermal overload protection, propeller fan, 24 volt control transformer, relays, remote wall thermostat, power disconnect switch, branch circuit fusing. Berko, model HUHAA-748, 7.5 KW. 480 Volt/3 Phase, 60 HZ., 650 CFM, 18 ft. throw. Operating weight 53 lbs.
AC-1	ROOM AIR CONDITIONING UNIT: Thru-the-wall, direct expansion, cooling only unit with three-speed fan, unit mounted thermostat, easy-access air filter, installation kit, six-way air flow control and exhaust control. Power is 120 Volt/1 Phase. Cooling capacities are based on ARI standards. Model numbers are General Electric.

Symbol	Model	Cooling Cap. (MBtuh)	CFM	Amps	Weight
AC-1	AJCS06CLA	6,000	250	5.7	123 lbs.

SYMBOL	DESCRIPTION
EF-1	EXHAUST FAN: Belt driven centrifugal wall exhauster with backward curved non-overloading aluminum wheel and hub, statically and dynamically balanced, with heavy gauge aluminum hood, housing and base. Motor shall be continuous duty type with permanently lubricated double sealed ball bearings. Furnish complete with backdraft damper, birdscreen, heavy duty cast iron adjustable drive pulley, and mounting base. External aluminum wiring post shall be completely factory assembled and wired to junction box. Power is 120 Volt/1 Phase. Model numbers are Loren Cook.

Symbol	Model	CFM	ESP	RPM	H.P.	Operating Weight
EF-1	ACW135W2B	1,000	0.375"	982	1/4	95 lbs.

SYMBOL	DESCRIPTION
SR-1	SUPPLY REGISTER: Price series 620DAL double deflection extruded aluminum supply grille with individually adjustable vanes on 3/4" centers. Furnish with an aluminum opposed blade balancing damper, and a factory applied white enamel finish.
DL-1	DRUM PUNKAH: Price series HCD drum louvers with opposed blade damper, drum, frame and adjustable vanes shall be extruded aluminum construction with white baked enamel finish, felt seals, and flange sponge rubber gasket.
TG-1	TRANSFER GRILLE: Price series 630 extruded aluminum transfer air grille with stationary vanes set at 45° angle on 3/4" centers. Furnish with a factory applied white baked enamel finish.
L-1	LOUVER: Airolite type K630, 4" deep, extruded aluminum stationary louver with 30° blades set on 3" centers. The entire unit shall be assembled by welding. Furnish complete with interior 1/4" mesh aluminum birdscreen, baked Kynar 500 finish (color selected by architect) and flat flange frame. Furnish louvers with extruded aluminum parallel blade, motor operated dampers with tight seal package and a two-position, spring return 24 VAC Phase motor operator.

EQUIPMENT SCHEDULE

SYMBOL	DESCRIPTION
MD-1	MOTORIZED DAMPER: Extruded aluminum parallel blade dampers with tight seal package, bronze bearing, external linkage and two position normally closed, outdoor installed, motor operator. Dowco model ARM. Power is 24 VAC Phase.
LQD-1	MANUAL DAMPER: Extruded aluminum opposed blade dampers with bronze bearing, external linkage and locking quadrant. Dowco model ARM.
DS/EW	DRENCH SHOWER/EYEWASH: Floor mounted, drench showereyewash. Shower shall have a 10"ø plastic shower hood and a 1" IPS stay-open ball valve operated by a stainless steel push flag handle. Eyewash shall come complete with 11"ø stainless steel bowl, chrome plated brass yoke assembly with twin aerated heads and chrome plated 1" IPS stay-open ball valve, operated by a stainless steel push flag handle. HAWS model 8309WC. Trap ---- Vent ---- CW 1-1/4" HW ----
YHY	YARD HYDRANT: Zurn model Z-1385 exposed, non-freeze yard hydrdant with bronze casting, cast aluminum casing guard all bronze interior parts and non-turning operating rod with free-floating compression closure valve with 1" connection. Furnish complete with operating key lock. Trap ---- Vent ---- CW 1" HW ----
HB	HOSE BIBB: 3/4" flanged female inlet, 3/4" hose thread outlet, lock shield cap, tee handle and rough or polished chrome plate finish. Chicago Faucet No. 387. Furnish with vacuum breaker. Trap ---- Vent ---- CW 1/2" HW ----
BFP	BACKFLOW PREVENTER: Reduced pressure principle backflow preventer with pressure differential relief valve located between two positive seating check valves. The assembly shall consist of two full port ball valves before and after the device, two unions, test cocks and an up-stream protective strainer. The unit shall have a bronze body, stainless steel check seats and stainless steel relief valve seats. Watts model U909-S-QT rated for 140° F and 175 psi pressure. The 1-1/2" unit shall be capable of flowing 48 gpm with a 10 psi pressure drop. Furnish with a model 909AG series air gap.

Note:
MODEL NUMBERS GIVEN ARE TO ESTABLISH THE MINIMUM REQUIREMENTS OF THE EQUIPMENT SPECIFIED. IF, IN THE OPINION OF THE CONTRACTOR, AN ALTERNATE ITEM EQUALS OR EXCEEDS THE ITEM SPECIFIED, LITERATURE AND/OR SAMPLES SUBSTANTIATING THIS CLAIM SHALL BE SUBMITTED TO THE ARCHITECT AND ENGINEER FOR APPROVAL.

SYMBOLS LEGEND

SYMBOL	DESCRIPTION
POT	POTABLE WATER LINE
W	WATER LINE (EXTERIOR)
CFM	CUBIC FEET PER MINUTE
ESP	EXTERNAL STATIC PRESSURE
PSI	POUNDS PER SQUARE INCH
GPM	GALLONS PER MINUTE
	BALANCING DAMPER
DUCT UNIT	FLEX CONNECTION
	SUPPLY DUCT, SECTION
	RETURN OR EXHAUST DUCT, SECTION
	TURNING VANES
	SURFACE MOUNTED SUPPLY GRILLE
	SURFACE MOUNTED RETURN OR EXHAUST GRILLE
T	ELECTRIC THERMOSTAT
	BALL VALVE
	UNION
	CHECK VALVE
	WYE STRAINER
	GAUGE WITH GAUGE COCK
	RISE IN PIPING
	DROP IN PIPING
	VALVE IN RISE OR DROP

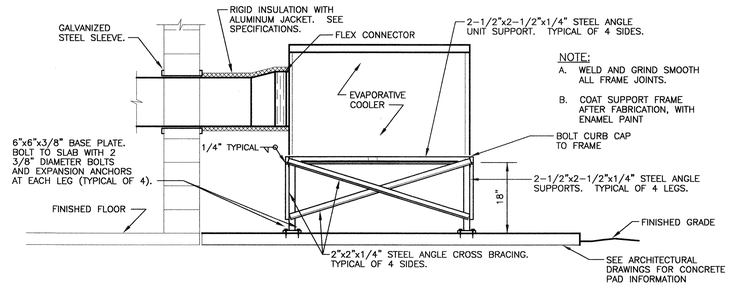

Equipment Support Frame Detail (1 / P-02)
NO SCALE

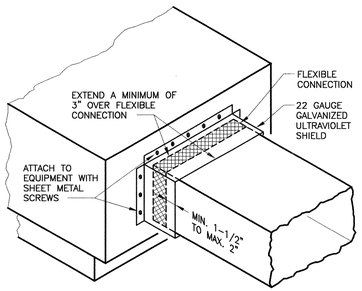

Ultraviolet Shield Detail (2 / P-02)
NO SCALE

AS BUILT INFORMATION
CONTRACTOR DATE
WORK STAKED BY DATE
INSPECTOR'S ACCEPTANCE BY DATE
VERIFICATION BY DATE
DRAWINGS CORRECTED BY DATE
MICRO-FILM INFORMATION
RECORDED BY DATE
NO.

BENCH MARKS
SURVEY INFORMATION
FIELD NOTES
NO. BY DATE

ENGINEER'S SEAL

08/02/2002

NO.	DATE	REMARKS	BY
		REVISIONS	

DESIGN
DESIGNED BY WFZ DATE NOV 2001
DRAWN BY RAG DATE NOV 2001
CHECKED BY WFZ DATE NOV 2001

HDR
HDR Engineering, Inc.

BERNALILLO COUNTY
PUBLIC WORKS DIVISION

TITLE: PAJARITO AREA VACUUM STATION MECHANICAL EQUIPMENT SCHEDULE, SYMBOLS LEGEND, AND DETAILS

Design Review Committee | City Engineer Approval | Last Design Update | Mo./Day/Yr. | Mo./Day/Yr.

PROJECT NO.	MAP NO.	SHEET	OF
TS - 01 - 13 COA - 647291	Q-10, R-10	P-02A	3

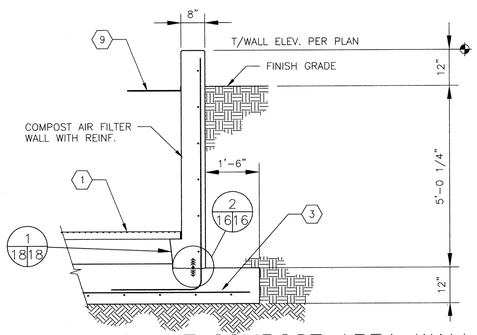

16 18|18 SECTION AT COMPOST AREA WALL
1/2" = 1'-0"

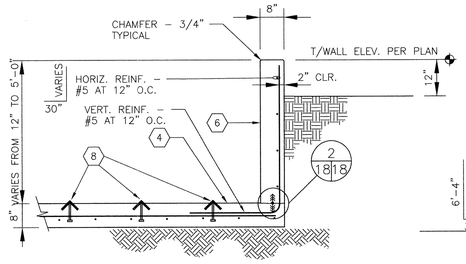

17 18|18 SECTION AT RAMP WALL
1/2" = 1'-0"

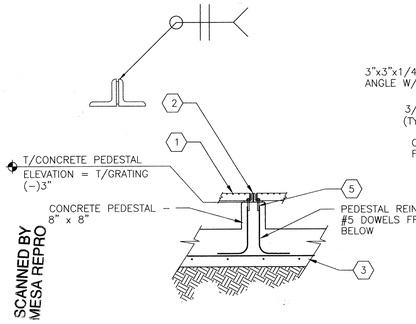

11 18|18 SECTION AT SUPPORT PEDESTAL
1/2" = 1'-0"

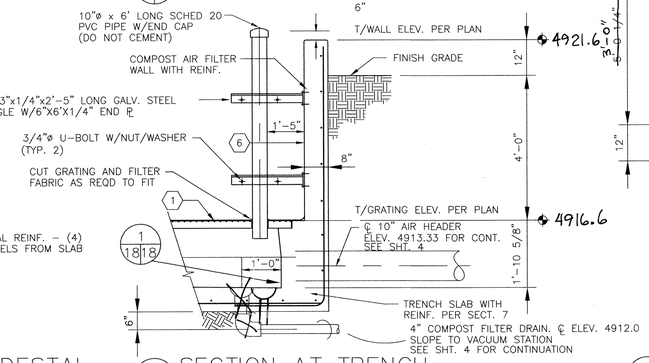

12 18|18 SECTION AT TRENCH
1/2" = 1'-0"

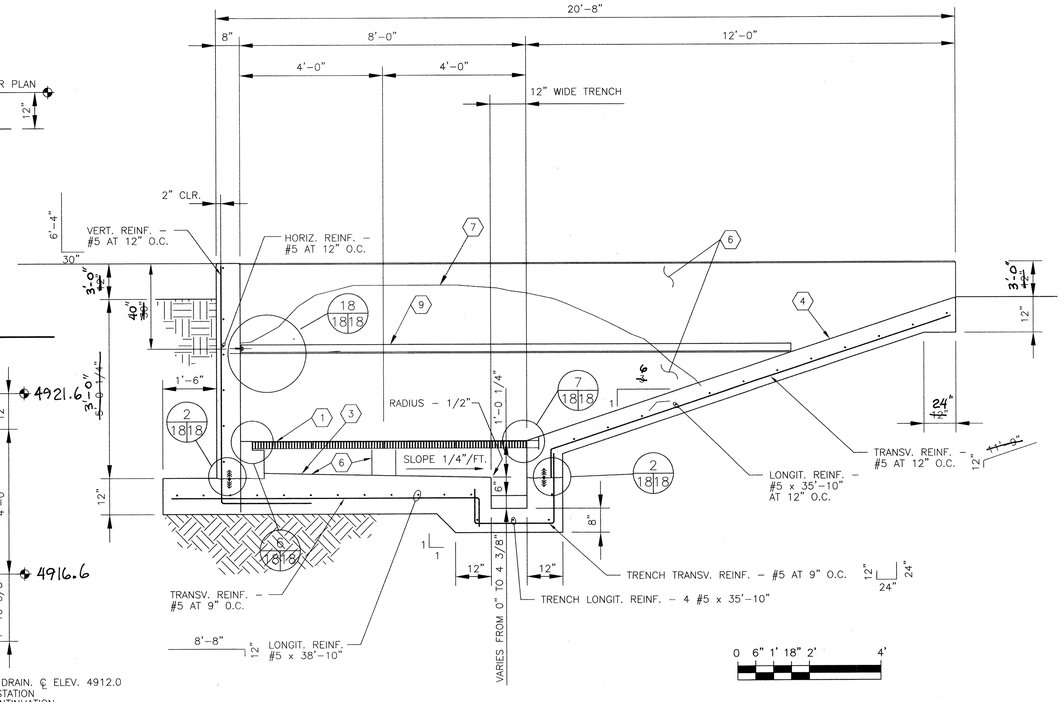

13 18|18 SECTION – TRANSVERSE
1/2" = 1'-0"

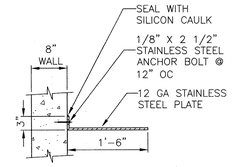

18 18|18 BAFFLE DETAIL
1" = 1'-0"

REVISED OCT. 17, 2002

GENERAL SHEET NOTES :

A) FOR PIPE SIZES AND LOCATIONS, SEE EQUIPMENT PLAN, SECTIONS AND DETAILS.
B) COMPOST AIR FILTER LOCATION SHALL BE SITE PLAN.
C) REFER TO GENERAL NOTES ON SHEET 2 FOR CONCRETE AND CONCRETE REINFORCEMENT INFORMATION.
D) REFER TO SHEET 2 FOR TYPICAL CONCRETE CORNER DETAILS.
E) REFER TO SHEET 2 FOR ADDITIONAL REINFORCEMENT AT TYPICAL CONCRETE WALL PENETRATION.

SHEET KEYED NOTES : (XX)

1) GRATING TYPE 2
2) ALUMINUM ANGLE – DOUBLE L 3 x 3 x 1/2, BACK TO BACK WITH SPACER BAR – 1/4 x 2 1/2 x 2 1/2 AT 12" O.C. MAXIMUM BETWEEN AND AT EACH ENDS, PROVIDE 1/16" THICK NEOPRENE GASKET AT ALL ANGLE TO CONCRETE BEARING LOCATIONS
3) CAST–IN–PLACE CONCRETE PLENUM SLAB– 1'–0" THICK MINIMUM
4) CAST–IN–PLACE RAMP SLAB – 8" THICK
5) PROVIDE CHEMICAL ANCHORS – STAINLESS STEEL, THREADED ROD 1/2" DIAMETER x 4" LONG W/ 3" EMBEDMENT EACH ANGLE AT CONCRETE BEARING

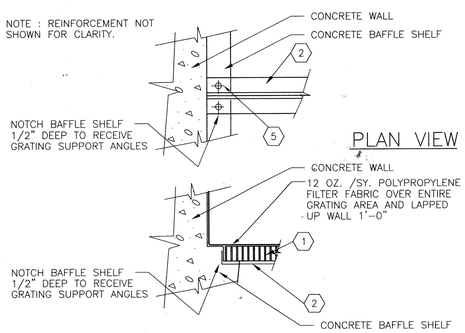

6 18|18 SECTION AT ANGLE BEARING
1" = 1'-0"

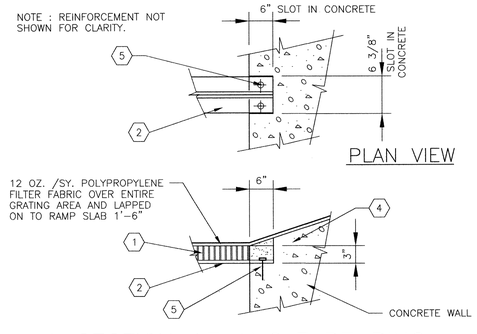

7 18|18 SECTION AT ANGLE BEARING
1" = 1'-0"

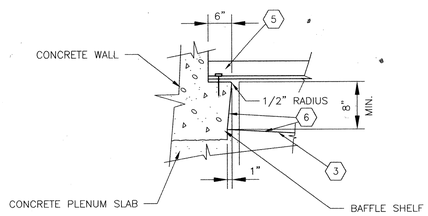

1 18|18 SECTION AT BAFFLE SHELF
1" = 1'-0"

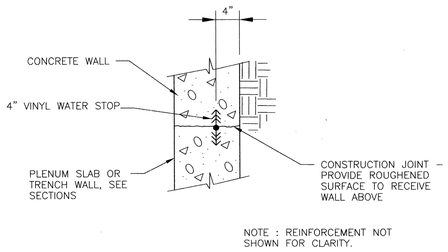

2 18|18 SECTION AT WATER STOP
1" = 1'-0"

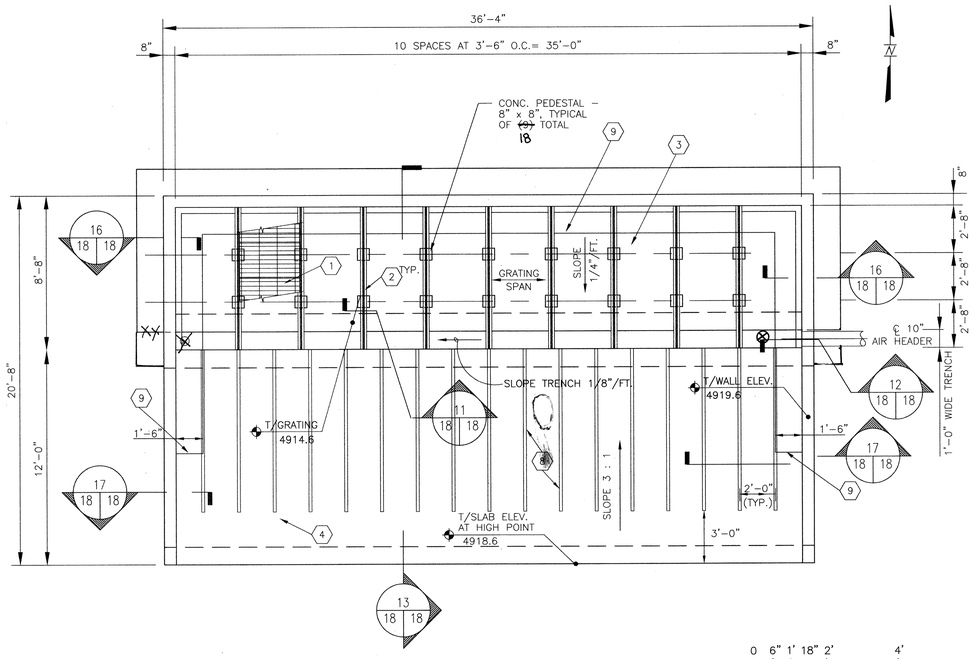

PLAN – COMPOST AIR FILTER
1/4" = 1'-0"

HDR

HDR Engineering, Inc.

BERNALILLO COUNTY
PUBLIC WORKS DIVISION

TITLE: PAJARITO AREA VACUUM STATION
COMPOST FILTER
PLAN, SECTIONS, & DETAILS

Design Review Committee: APPROVED SEP 1 1 2002 DESIGN REVIEW COMMITTEE
City Engineer Approval: APPROVED SEP 1 2 2002 CITY ENGINEER
Date Design Update | Mo./Day/Yr. | Mo./Day/Yr.

PROJECT NO.	MAP NO.	SHEET	OF
TS – 01 – 13 COA – 647291	Q–10, R–10	P–03	3

AS BUILT INFORMATION
CONTRACTOR DATE
WORK STAKED BY See
INSPECTOR'S ACCEPTANCE BY Sh. 2 DATE
FIELD VERIFICATION BY DATE
DRAWINGS CORRECTED BY DATE
MICRO–FILM INFORMATION
RECORDED BY DATE
NO.

BENCH MARKS

SURVEY INFORMATION
FIELD NOTES
NO. BY DATE

ENGINEER'S SEAL

NO.	DATE	REMARKS	BY
		REVISIONS	
		DESIGN	
		DESIGNED BY WFZ	DATE NOV 2001
		DRAWN BY RAG	DATE NOV 2001
		CHECKED BY WFZ	DATE NOV 2001

ONE-LINE DIAGRAM LEGEND

4.16 KV — 480 V — 750 KVA 3ø, 3W
TRANSFORMER WITH PRIMARY AND SECONDARY VOLTAGE, KVA RATING, AND NUMBER OF PHASES, WIRES AND WINDING CONNECTIONS, IF APPLICABLE, AS SHOWN.

100 / 3 KW
MOTOR WITH EXPECTED HORSEPOWER SHOWN, OR NON-MOTOR LOAD SUCH AS A UNIT HEATER IN KW. LOADS SHOWN MAY VARY WITH EQUIPMENT FURNISHED. IF EQUIPMENT HAS LARGER LOAD, ASSOCIATED CABLE, CONDUIT , AND ELECTRICAL EQUIPMENT SHALL BE ENLARGED AS REQUIRED.

MOTOR STARTER OR CONTROL PANEL
CABLE AND CONDUIT AS REQUIRED BY MANUFACTURER
ONE-LINE TO A PACKAGE UNIT, SUCH AS A BELT FILTER PRESS OR AIR COMPRESSOR, SHALL IMPLY THAT ANY AND ALL ASSOCIATED EQUIPMENT SHALL BE INSTALLED AND WIRED.

15 / CS
M201: 3#10,#10G, 3#14, 1"
3#14, 1/2"
CIRCUIT "M201" WITH 3 #10 POWER CONDUCTORS, 1 #10 GROUND CONDUCTOR, AND 3 #14 CONTROL CONDUCTORS ALL IN 1" CONDUIT TO 15 HP MOTOR AND CONTROL STATION. CONDUIT BODIES, JUNCTION BOXES, OR PULL BOXES ARE NOT NECESSARILY SHOWN.

INDICATES THAT ALL OR PART OF CIRCUIT IS ROUTED UNDERGROUND EITHER IN DUCTBANK OR DIRECT BURIED. CONDUIT SIZE SHOWN IS FOR ABOVE GRADE OR INSIDE STRUCTURES. SEE DUCTBANK SECTIONS FOR CONDUIT SIZE OF UNDERGROUND PORTION OF CIRCUIT.

52
MEDIUM VOLTAGE DRAWOUT CIRCUIT BREAKER

MEDIUM VOLTAGE MOTOR STARTER (CONTACTOR) FULL VOLTAGE, NON-REVERSING UNLESS NOTED OTHERWISE

3P-20
LOW VOLTAGE CIRCUIT BREAKER, 3 POLE, 20 AMPERE

MCP / SIZE 2
NEMA SIZE 2 COMBINATION MAGNETIC MOTOR STARTER, FULL VOLTAGE, NON-REVERSING UNLESS NOTED OTHERWISE
FVR: FULL VOLTAGE REVERSING
MCP: MOTOR CIRCUIT PROTECTOR

SSRV
SOLID-STATE REDUCED VOLTAGE MOTOR STARTER, WITH BYPASS/RUN CONTACTOR SIZED FOR MOTOR LOAD IN HORSEPOWER FOR MEDIUM OR LOW VOLTAGE APPLICATIONS

3P-60
3 POLE, 60 AMPERE COMBINATION MAGNETIC CONTACTOR

POTENTIAL TRANSFORMER

CURRENT TRANSFORMER

FUSE AND DISCONNECT SWITCH
AMP RATING AS REQ'D IF NOT SHOWN

NON-FUSED DISCONNECT SWITCH; WHERE A DISCONNECT IS SHOWN, THE LINE SIDE CIRCUIT SHALL BE CONTINUED TO THE LOAD UNLESS NOTED OTHERWISE. APPLIES TO BOTH FUSED AND NON-FUSED DISCONNECTS.

FLEXIBLE FLOAT SWITCH CABLE.

100
FLEXIBLE MOTOR CABLE.

K
KEY-INTERLOCK SYMBOL

CM
CIRCUIT MONITOR

SCHEMATIC SYMBOLS

NORMALLY OPEN PUSH BUTTON
NORMALLY CLOSED PUSH BUTTON
NORMALLY OPEN, MAINTAINED PUSH BUTTON
NORMALLY CLOSED, MAINTAINED PUSH BUTTON
INDICATING LIGHT: R = RED; G = GREEN; B = BLUE; W = WHITE; A = AMBER; Y = YELLOW
NORMALLY CLOSED GEARED LIMIT SWITCH
NORMALLY OPEN GEARED LIMIT SWITCH
TORQUE SWITCH
FUSE
M — MOTOR CONTACTOR COIL
RELAY COIL
POTENTIOMETER
SWITCH
MS — TOGGLE SWITCH MANUAL STARTER
OVERLOAD
DI-X — DISCREET INPUT/OUTPUT (DO=OUTPUT FROM PLC OR RTU; DI=INPUT TO PLC OR RTU)
GROUND
FLOAT SWITCH-OPENS ON RISING LEVEL
FLOAT SWITCH-CLOSES ON RISING LEVEL
PRESSURE SWITCH-OPENS ON RISING PRESSURE
PRESSURE SWITCH-CLOSES ON RISING PRESSURE
NORMALLY CLOSED, WITH TIME DELAY ON CLOSING AFTER COIL IS DE-ENERGIZED
NORMALLY OPEN, WITH TIME DELAY ON OPENING AFTER COIL IS DE-ENERGIZED
NORMALLY CLOSED, WITH TIME DELAY ON OPENING AFTER COIL IS ENERGIZED
NORMALLY OPEN, WITH TIME DELAY ON CLOSING AFTER COIL IS ENERGIZED
TEMPERATURE SWITCH-OPENS ON RISING TEMPERATURE
TEMPERATURE SWITCH-CLOSES ON RISING TEMPERATURE
FLOW SWITCH-OPENS ON INCREASING FLOW
FLOW SWITCH-CLOSES ON INCREASING FLOW
LIMIT SWITCH-NORMALLY OPEN
LIMIT SWITCH-NORMALLY CLOSED
WIRE CONNECTION POINT
EXTERNAL WIRE TERMINATION POINT
NORMALLY CLOSED CONTACT
NORMALLY OPEN CONTACT
CPT — CONTROL POWER TRANSFORMER

MISCELLANEOUS PLAN SYMBOLS

GROUND ROD
GROUND CONNECTION
JB — JUNCTION BOX
PB — PULL BOX
MOTOR
MISCELLANEOUS DEVICE
MS — MANUAL STARTER
DISCONNECT SWITCH
SEPARATELY MOUNTED MOTOR STARTER
LIGHTING PANEL
LIGHTING PANEL WITH TRANSFORMER OFFSET EITHER ABOVE OR BELOW
POWER PANEL
TELEPHONE OUTLET

X z / LPY-YY — FLUORESCENT TYPE LIGHTING FIXTURE: "X" INDICATES FIXTURE NUMBER, SEE FIXTURE SCHEDULE; "LPY-YY" INDICATES LIGHTING PANEL CIRCUIT; "z" INDICATES FIXTURE CONTROLLED BY SWITCH "z". SEE FIXTURE SCHEDULE FOR ANY ADDITIONAL NOTATION.

X z / LPY-YY — INCANDESCENT OR HID TYPE LIGHTING FIXTURE: "X" INDICATES FIXTURE NUMBER, SEE FIXTURE SCHEDULE; "LPY-YY" INDICATES LIGHTING PANEL CIRCUIT; "z" INDICATES FIXTURE CONTROLLED BY SWITCH "z". SEE FIXTURE SCHEDULE FOR ANY ADDITIONAL NOTATION.

LPY-YY — DUPLEX RECEPTACLE "LPY-YY" INDICATES LIGHTING PANEL CIRCUIT.

30 — 240 V, 1ø RECEPTACLE, AMP RATING NOTED.

60 — 480 V, 3ø WELDING RECEPTACLE, AMP RATING NOTED.

z — SINGLE POLE SWITCH, "z" INDICATES LIGHTS WHICH ARE CONTROLLED BY SWITCH. TYPICAL FOR ALL SWITCHES.

3 — 3-WAY SWITCH

4 — 4-WAY SWITCH

D — DIMMER SWITCH

ABBREVIATIONS

A	AMPERE, ALARM
AC	ALTERNATING CURRENT
ANN	ANNUNCIATOR
AR	ALARM RELAY
ATS	AUTO TRANSFER SWITCH
AWG	AMERICAN WIRE GAGE
BT	BEARING TEMPERATURE
C	CLOSE, COUNTER OR CONTACTOR
CAP	CAPACITOR
CB	CIRCUIT BREAKER
CB"a"	CIRCUIT BREAKER AUXILIARY CONTACT (OPEN WHEN BREAKER IS OPEN AND CLOSED WHEN BREAKER IS CLOSED OR TRIPPED)
CB"b"	CIRCUIT BREAKER AUXILIARY CONTACT (CLOSED WHEN BREAKER IS OPEN AND OPEN WHEN BREAKER IS CLOSED OR TRIPPED)
CI	CELL INTERLOCK
CKT	CIRCUIT
CL2	CHLORINE
COS	CABLE OPERATED SWITCH
CP	CONTROL PANEL
CPT	CONTROL POWER TRANSFORMER
CR	CONTROL RELAY
CS	CONTROL STATION
CT	CYCLE TIMER OR CURRENT TRANSFORMER
CTC	CYCLE TIMER CLUTCH
CTM	CYCLE TIMER MOTOR
2/C	2 CONDUCTOR
4"C	4" CONDUIT
DC	DIRECT CURRENT
DI	DOOR INTERLOCK
DM	DAMPER MOTOR OR DEMAND METER
DPDT	DOUBLE POLE DOUBLE THROW
DPST	DOUBLE POLE SINGLE THROW
DS	DISCONNECT SWITCH
EC	EMPTY CONDUIT
EL	ELEVATION OR EMERGENCY LIGHT
EMH	ELECTRICAL MANHOLE
ER	ELECTRODE RELAY
ES	END SWITCH
ETM	ELAPSED TIME METER
EHH	ELECTRICAL HANDHOLE
F	FORWARD
FS	FLOW SWITCH
G	GROUND
GEN	GENERATOR
GFI	GROUND FAULT INTERRUPTER
GLS	GEARED LIMIT SWITCH
#8G	#8 GROUND WIRE
H	HIGH
HC	HOT CIRCUIT
HOA	HAND-OFF-AUTO
HOR	HAND-OFF-REMOTE
HP	HORSEPOWER
HWCO	HIGH WATER CUTOFF
HZ	HERTZ (CYCLE)
I/O	INPUT/OUTPUT
JB	JUNCTION BOX
K	KEY INTERLOCK
KV	KILOVOLT
KVA	KILOVOLT AMPERE
KVAR	KILOVAR
KW	KILOWATT
KWH	KILOWATT HOUR
L	LOW, LEVEL
LA	LIGHTNING ARRESTER
LC	LIGHTING CONTACTOR
LOR	LOCAL-OFF-REMOTE
LP	LIGHTING PANEL
LS	LIMIT OR LEVEL SWITCH
LWCO	LOW WATER CUTOFF
M	MAGNETIC MOTOR STARTER
MA	MILLIAMPERE
MCC	MOTOR CONTROL CENTER
MCLU	MOTOR CONTROL LINEUP
MCM	THOUSAND CIRCULAR MIL
MCP	MOTOR CIRCUIT PROTECTOR
MD	MOISTURE DETECTOR
MFM	MAGNETIC FLOW METER
MFR	MANUFACTURER
MH	MANHOLE OR MOUNTING HEIGHT
MOG	MOTOR OPERATED GATE
MOV	MOTOR OPERATED VALVE
MS	MANUAL MOTOR STARTER
MSH	MOTOR SPACE HEATER
MV	MILLIVOLT
MVA	MEGAVOLT AMPERE
N	NEUTRAL
NATS	NON-AUTO TRANSFER SWITCH
NC	NORMALLY CLOSED
NO	NORMALLY OPEN, NUMBER
O	OPEN
OL	OVERLOAD
P	PRIMARY
PB	PUSH BUTTON OR PULL BOX
PE	PHOTOELECTRIC
PF	POWER FACTOR METER
PH	PHASE, CHEMICAL TERM
PLC	PROGRAMMABLE LOGIC CONTROLLER
PRV	POWER ROOF VENTILATOR
PRXS	PROXIMITY SWITCH
PS	PRESSURE SWITCH
PT	POTENTIAL TRANSFORMER, PROGRAM TIMER
2P	2 POLE
R	RAISE, RELAY OR REVERSE
RECP	RECEPTACLE
RT	REPEATING TIMER
RTD	RESISTANCE TYPE TEMP DETECTOR
RTU	REMOTE TERMINAL UNIT
S2	SIZE 2 STARTER
SH	SPACE HEATER
SO	SOLENOID OILER
SP	SINGLE POLE
SPDT	SINGLE POLE DOUBLE THROW
SPST	SINGLE POLE SINGLE THROW
SS	SELECTOR SWITCH
SSRV	SOLID-STATE REDUCED VOLTAGE
SV	SOLENOID VALVE
SWBD	SWITCHBOARD
SWGR	SWITCHGEAR
SW	SWITCH
T	THERMOSTAT, TIMER, OR TOTALIZER
TACH	TACHOMETER
TB	TERMINAL BLOCK
TD	TIME DELAY RELAY
TDE	TIME DELAY AFTER DE-ENERGIZATION
TDD	TIME DELAY AFTER ENERGIZATION
TEMP	TEMPERATURE
THH	TELEPHONE HANDHOLE
TM	TIMER MOTOR
TQS	TORQUE SWITCH
TTB	TELEPHONE TERMINAL BOX
UG	UNDERGROUND
UV	UNDER VOLTAGE, ULTRAVIOLET
UPS	UNINTERRUPTIBLE POWER SUPPLY
V	VOLTS
VA	VOLT AMPERE
VAR	VARMETER
VFD	VARIABLE FREQUENCY DRIVE
VLS	VALVE LIMIT SWITCH
VPI	VALVE POSITION INDICATOR
W	WATT
WH	WATTHOUR METER
WM	WATT METER
WP	WEATHERPROOF
X	AUXILIARY RELAY
XFMR	TRANSFORMER
XP	EXPLOSION PROOF
Z	AUXILIARY RELAY
ZS	POSITION SWITCH

CONDUIT AND WIRING INSTALLATION

PLAN LEGEND

CONDUIT EXPOSED
CONDUIT CONCEALED
CONDUIT TURNING DOWN
CONDUIT TURNING UP
CONDUIT PLUGGED FLUSH
CONDUIT CAPPED
HOME RUN
L1-3 — GND — SWITCH LEG — HOME RUN TO LIGHTING PANEL L1, CIRCUIT NUMBER 3; SHORT DASH IS NEUTRAL CONDUCTOR, LONG DASH IS PHASE CONDUCTOR.
E — UNDERGROUND CONCRETE ENCASED DUCTBANK
EE — DIRECT BURIED CONDUIT
EEE — DIRECT BURIED CABLE
GROUND CABLE

GENERAL NOTES

1. IN GENERAL CONDUIT ROUTING IS NOT SHOWN ON THE PLANS. THE CONTRACTOR SHALL BE RESPONSIBLE FOR ROUTING ALL CONDUITS INCLUDING THOSE INDICATED ON ONE-LINES AND HOME-RUNS. SEE SPECIFICATIONS FOR CONDUIT INSTALLATION REQUIREMENTS. CONDUIT ROUTINGS AND STUB-UP LOCATIONS THAT ARE INDICATED ARE APPROXIMATE. EXACT ROUTINGS SHALL BE AS REQUIRED FOR EQUIPMENT FURNISHED.
2. SOLID LINES INDICATE NEW WORK OR EQUIPMENT FOR THIS CONTRACT. SHADED LINES INDICATE EXISTING EQUIPMENT OR WORK UNDER ANOTHER CONTRACT.
3. THIS IS A GENERAL LEGEND AND ABBREVIATIONS SHEET, SOME SYMBOLS AND ABBREVIATIONS MAY NOT BE UTILIZED ON THIS SPECIFIC PROJECT.

HDR Engineering, Inc.

AS BUILT INFORMATION — CONTRACTOR — DATE; WORK STAKED BY — DATE; INSPECTOR'S ACCEPTANCE BY — DATE; FIELD VERIFICATION BY — DATE; DRAWINGS CORRECTED BY — DATE; MICRO-FILM INFORMATION — RECORDED BY — DATE; NO.

BENCH MARKS

SURVEY INFORMATION — FIELD NOTES — NO. — BY — DATE

ENGINEER'S SEAL — DAVID F. BESINGER — NEW MEXICO — 12027 — REGISTERED PROFESSIONAL ENGINEER — 4-8-02

REVISIONS — NO. — DATE — REMARKS — BY

DESIGN — DESIGNED BY DB — DATE NOV 2001; DRAWN BY RAG — DATE NOV 2001; CHECKED BY WFZ — DATE NOV 2001

BERNALILLO COUNTY
PUBLIC WORKS DIVISION

TITLE: PAJARITO AREA VACUUM STATION ELECTRICAL LEGEND, NOTES AND ABBREVIATIONS

Design Review Committee — APPROVED — SEP 11 2002
City Engineer Approval — APPROVED — SEP 12 2002 — CITY ENGINEER
Last Design Update — Mo./Day/Yr. — Mo./Day/Yr.

PROJECT NO.	MAP NO.	SHEET	OF
TS - 01 - 13 COA - 647291	Q-10, R-10	E-01	6

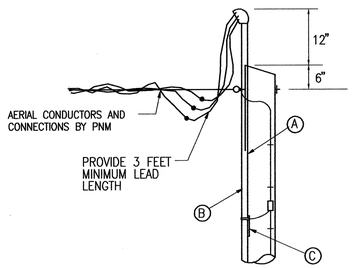

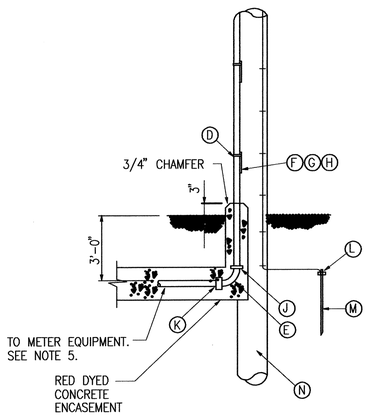

SERVICE RISER POLE DETAIL

NOT TO SCALE

MATERIAL LIST	
ITEM	DESCRIPTION
A	CLAMP TYPE WH
B	GALVANIZED CONDUIT
C	UNIVERSAL SUPPORT BRACKET
D	PIPE STRAP KIT
E	PVC COATED RIGID METAL ELBOW
F	5/8" X MACHINE BOLT
G	5/8" LOCK NUT
H	2-1/4" SQ. WASHER
J	COUPLING
K	STEEL TO PLASTIC ADAPTOR
L	#10-#2 GROUND LUG
M	3/4" X 10' COPPERCLAD GROUND ROD
N	WOOD POLE, 35' CLASS 5

NOTES:

1. WEATHERHEAD SHALL BE 3" ABOVE NEUTRAL.
2. RISER BRACKET ASSEMBLY MUST HAVE PROVISIONS FOR GROUNDING.
3. CONTACT MR. SEAN GOVER (246-7744) OF PNM FOR UTILITY CONTACT PERSON.
4. ALL ABOVE-GRADE CONDUIT SHALL BE RIGID GALVANIZED OR IMC.
5. CONTRACTOR PROVIDES AND INSTALLS: POLES, CONDUIT, BRACKET, WEATHERHEAD, CONDUCTORS, METER BASE(S), METERING INSTRUMENT TRANSFORMER ENCLOSURE AND ALL MINOR FITTINGS.

REFERENCES TO PNM STANDARDS

(1) SEE DS-4-95 UNDERGROUND COMMERCIAL CUSTOMER OWNED SERVICE.
SEE DS-18-13.0 UNIVERSAL SUPPORT BRACKET.
SEE DS-18-20.1 GROUND ASSEMBLY.

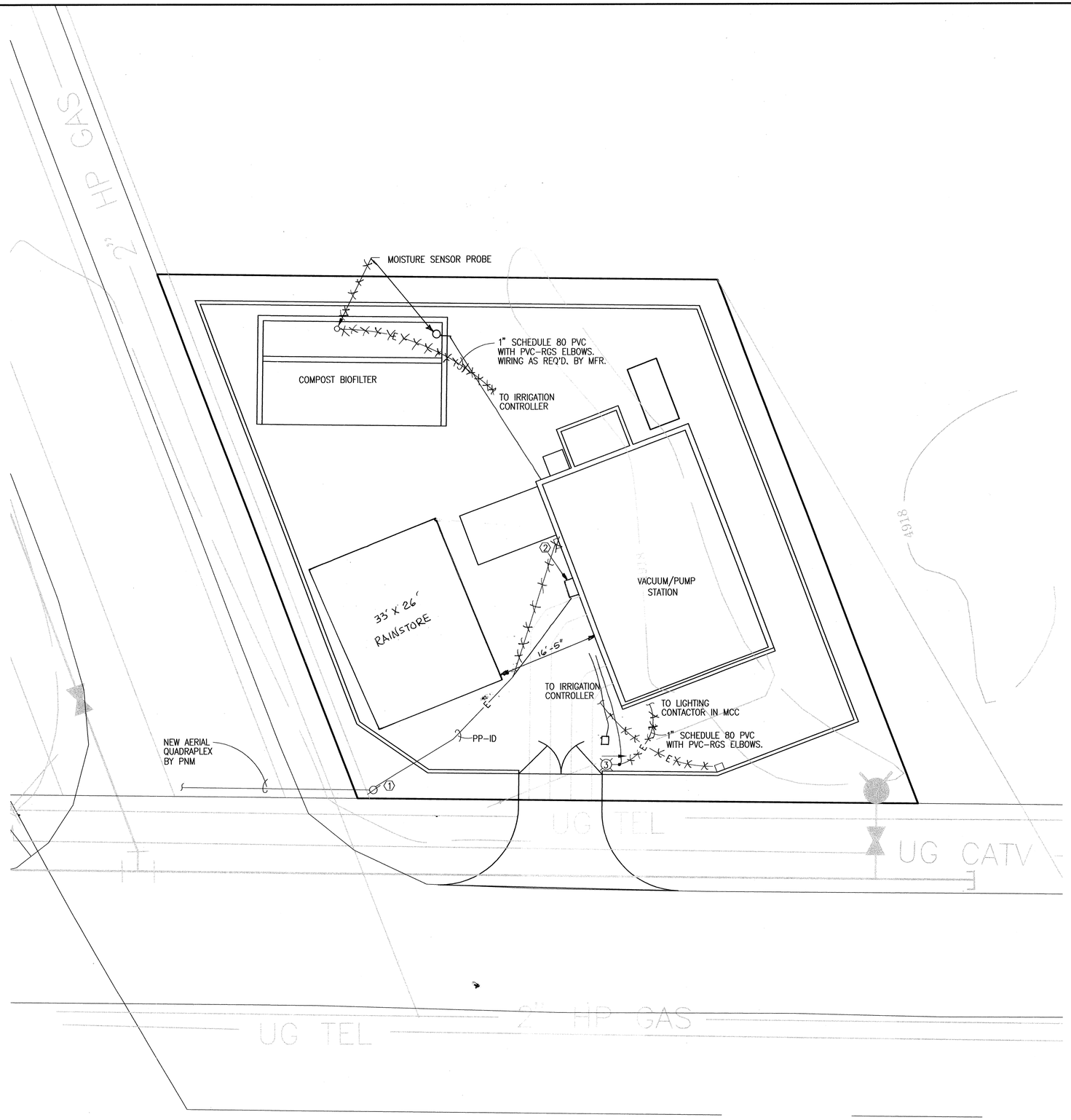

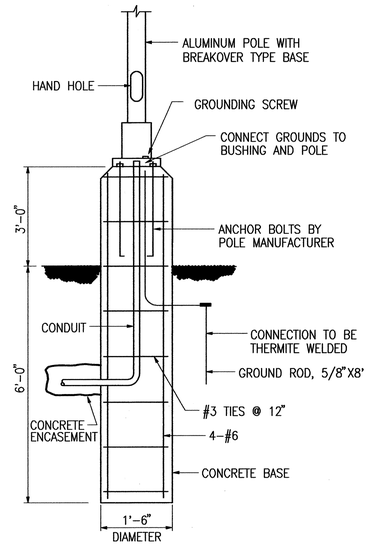

POLE BASE DETAIL

NOT TO SCALE

SPECIFIC NOTES:

(1) PROPOSED LOCATION OF SERVICE RISER POLE. SEE DETAIL THIS SHEET.

(2) LOCATION OF METERING EQUIPMENT.

N

0 10 20 30 40

SCALE IN FEET

SCANNED BY MESA REPRO

AS BUILT INFORMATION

CONTRACTOR DATE

WORK STAKED BY See DATE

INSPECTOR'S ACCEPTANCE BY SH. 2 DATE

FIELD VERIFICATION BY DATE

DRAWINGS CORRECTED BY DATE

MICRO-FILM INFORMATION

RECORDED BY DATE

NO.

BENCH MARKS

SURVEY INFORMATION

FIELD NOTES

NO.	BY	DATE

ENGINEER'S SEAL

DAVID F. BESINGER NEW MEXICO (2027) REGISTERED PROFESSIONAL ENGINEER 9-8-02

NO.	DATE	REMARKS	BY

REVISIONS

DESIGN

DESIGNED BY DB DATE NOV 2001

DRAWN BY RAG DATE NOV 2001

CHECKED BY WFZ DATE NOV 2001

HDR

HDR Engineering, Inc.

BERNALILLO COUNTY
PUBLIC WORKS DIVISION

TITLE: PAJARITO AREA VACUUM STATION

ELECTRICAL SITE LAYOUT

Design Review Committee: APPROVED SEP 11 2002

City Engineer Approval: APPROVED SEP 12 CD

Last Design Update | Mo./Day/Yr. | Mo./Day/Yr.

PROJECT NO.	MAP NO.	SHEET	OF
TS - 01 - 13 COA - 647291	Q-10, R-10	E-02	6

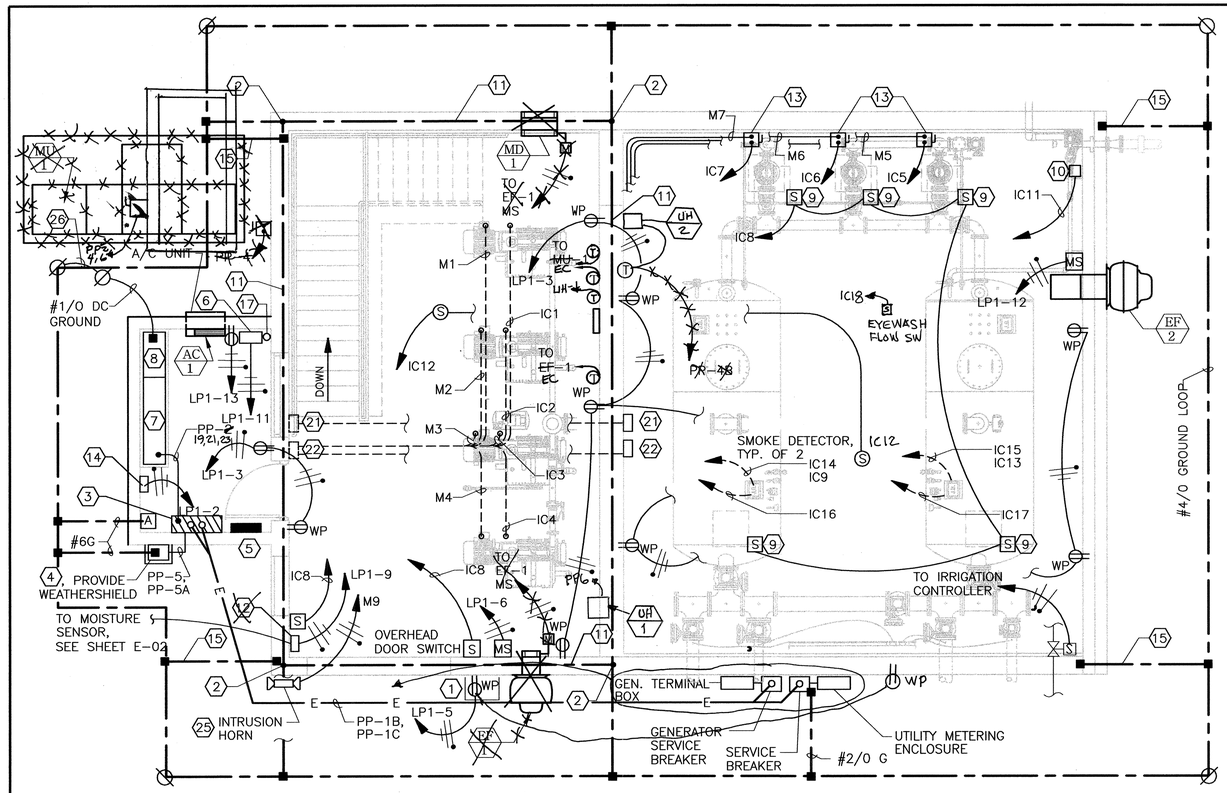

POWER PLAN

SCALE: 1/4" = 1'-0"

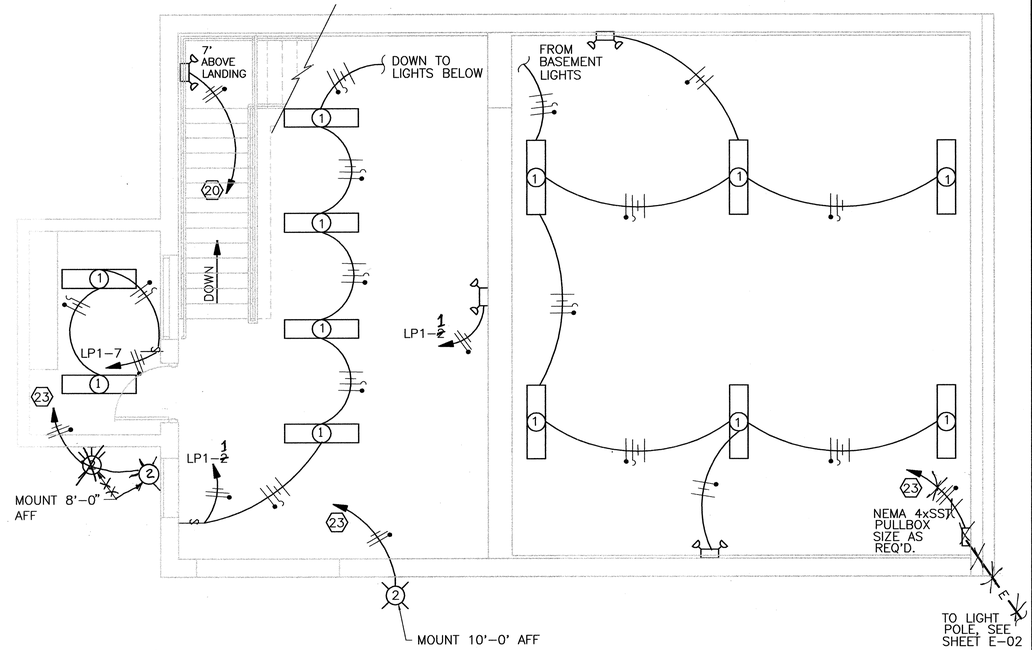

LIGHTING PLAN – UPPER LEVEL

SCALE: 1/4" = 1'-0"

SCANNED BY MESA REPRO

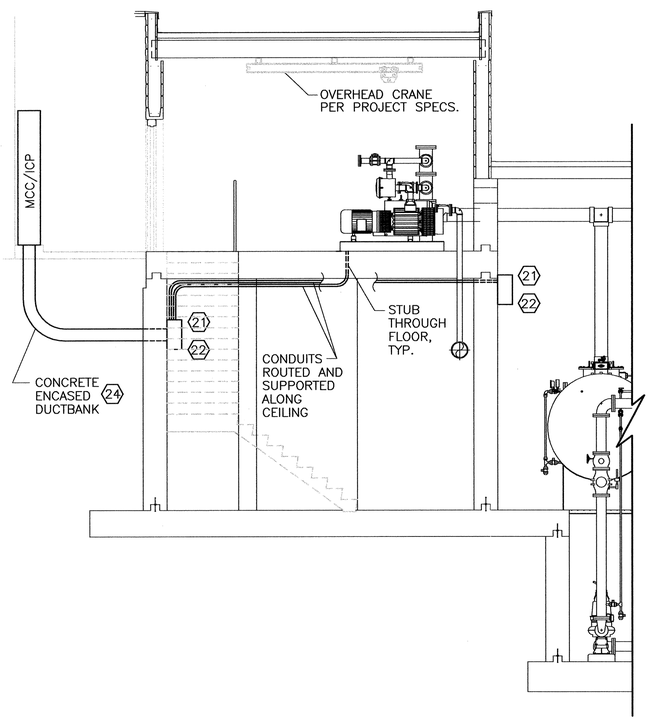

POWER SECTION

SCALE: 1/4" = 1'-0"

GENERAL NOTES:

ALL GROUND CONNECTIONS TO GROUND LOOP SHALL BE EXOTHERMIC WELDS, WELDS, GROUND CONNECTIONS IN PANELS SHALL BE CRIMPED LUG TYPE; ALL OTHER CONNECTIONS SHALL BE EXOTHERMIC WELDS. GROUND STATION IN ACCORDANCE WITH NEC 250.

SPECIFIC NOTES

1. VACUUM GAGE BOX, MOUNT RECEPTACLE INSIDE BOX.
2. LIGHTNING PROTECTION AIR TERMINAL (SEE MOUNTING AND OTHER DETAILS ON SHEET E-05)
3. POWER PANELBOARD PP W/SURGE ARRESTOR.
4. PANEL LP1 TRANSFORMER.
5. PANEL LP1
6. RADIO/RTU
7. MOTOR CONTROL CENTER
8. ICP/PLC
9. DOOR SWITCH MOUNTED ON HATCH.
10. STATION FLOOD FLOAT SWITCH
11. LIGHTNING PROTECTION CONDUCTOR MOUNTED ON ROOF. SEE SHEET E-05 FOR DETAILS.
12. ~~BIOFILTER IRRIGATION CONTROLLER~~ DELETED
13. LOCAL DISCONNECT FOR SEWAGE PUMP MOTOR LEADS.
14. CONTROL BOX (LANDSCAPING)
15. #2/0 G TIED TO SLAB REBAR
16. NOT USED
17. LOCATION OF RADIO ANTENNA. SEE DETAIL ON SHEET E-05.
18. UP TO LIGHT FIXTURE ABOVE.
19. CONTINUE LIGHTS INTO TANK ROOM.
20. CONTINUE UP TO LIGHTING PANEL, CIRCUIT LP1-3.
21. NEMA 4X SST PULLBOX FOR I & C CIRCUITS, SIZE AS REQ'D.
22. NEMA 4X SST PULLBOX FOR POWER CIRCUITS, SIZE AS REQ'D.
23. TO LIGHTING CONTACTOR IN MCC.
24. IN ADDITION TO THE CONDUITS REQUIRED BY THE ONE-LINES, INSTALL 2-1" SPARE CONDUITS TO BOTH POWER AND I&C PULLBOXES (TOTAL OF 4-1").
25. MOUNT AT 9'-0" AFF. INTRUSION HORN SHALL BE FEDERAL SIGNAL MODEL 350WB IN NEMA 4x ENCLOSURE.
26. BOND DC GROUND ROD TO AC GROUND ROD W/4/O.

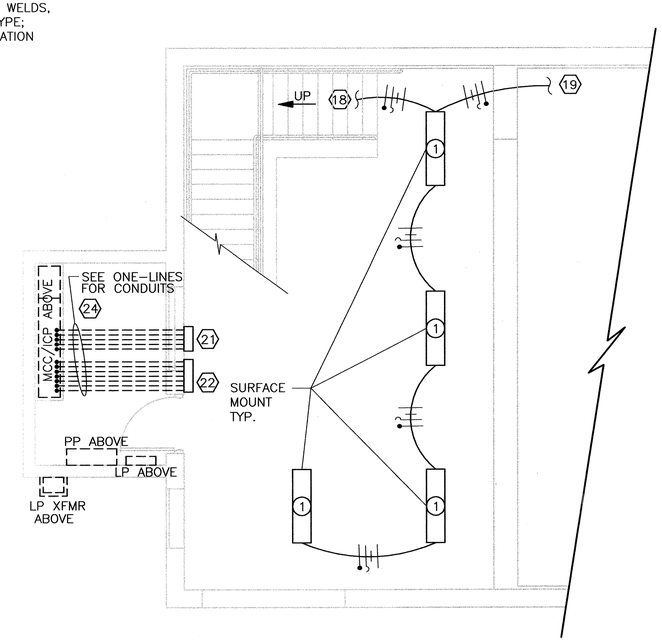

ELECTRICAL PLAN – LOWER LEVEL

SCALE: 1/4" = 1'-0"

REVISED OCT. 17, 2002

HDR

HDR Engineering, Inc.

BERNALILLO COUNTY
PUBLIC WORKS DIVISION

TITLE: PAJARITO AREA VACUUM STATION POWER AND LIGHTING PLANS BELOW AND AT GRADE LEVEL

Design Review Committee: SEP 11 2002 DESIGN REVIEW COMMITTEE

City Engineer Approval: SEP 12 2002 CITY ENGINEER

Last Design Update: Mo./Day/Yr. | Mo./Day/Yr.

NO.	DATE	REMARKS	BY
		REVISIONS DESIGN	

DESIGNED BY DB DATE NOV 2001
DRAWN BY RAG DATE NOV 2001
CHECKED BY WFZ DATE NOV 2001

ENGINEER'S SEAL: DAVID F. BESINGER, NEW MEXICO, 12022, REGISTERED PROFESSIONAL ENGINEER, 4-8-02

AS BUILT INFORMATION
CONTRACTOR — DATE
WORK STAKED BY — DATE
ASSESSMENT BY See SH. 2
ACCEPTANCE BY — DATE
VERIFICATION BY — DATE
DRAWINGS CORRECTED BY — DATE
MICRO-FILM INFORMATION
RECORDED BY — DATE
NO.

BENCH MARKS

SURVEY INFORMATION
FIELD NOTES

NO.	BY	DATE

PROJECT NO.	MAP NO.	SHEET	OF
TS – 01 – 13 COA – 647291	Q-10, R-10	E-03	6

SHEET 21 OF 25

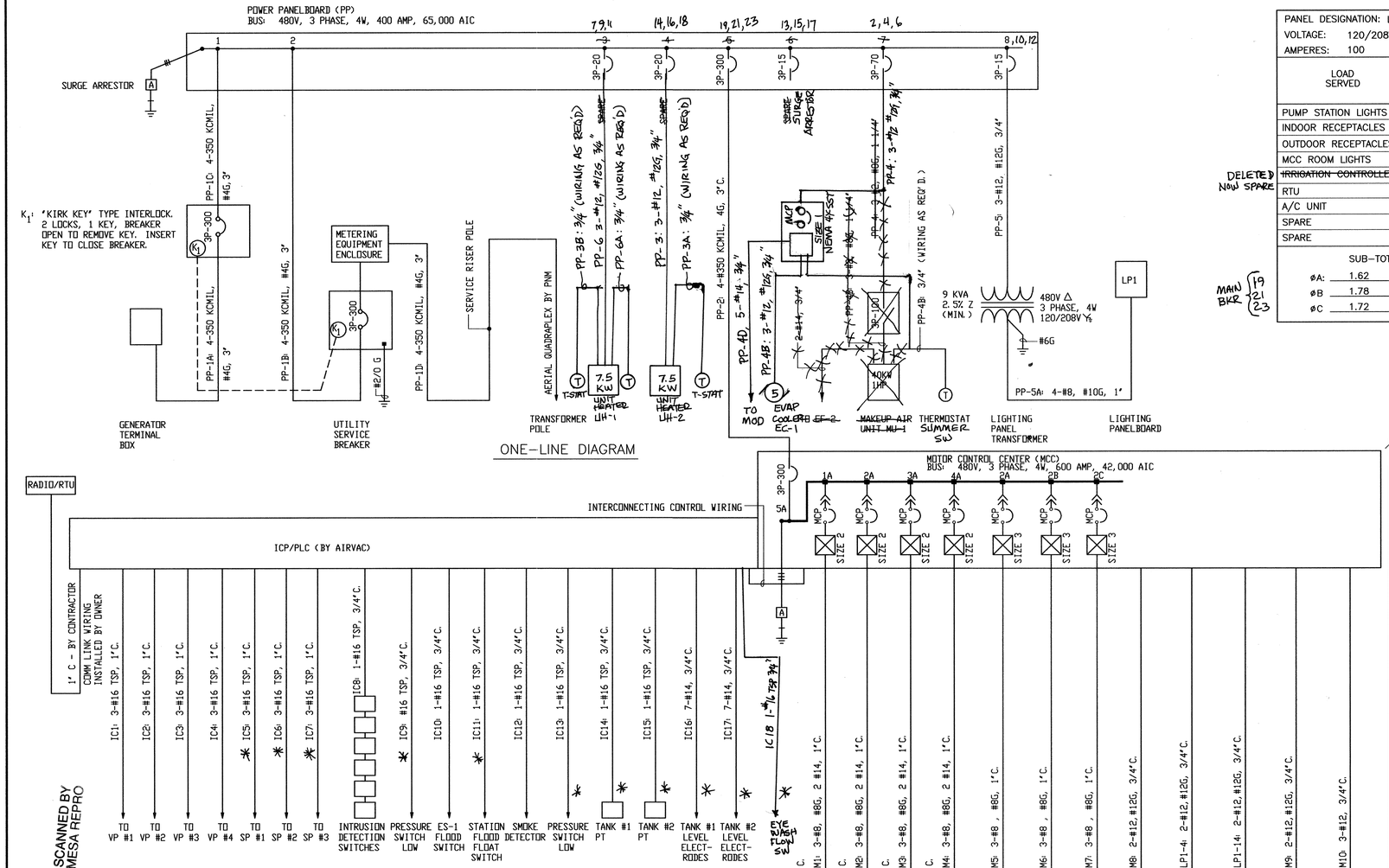

ONE-LINE DIAGRAM

PANEL DESIGNATION: LP1																
VOLTAGE: 120/208V, 3PH,4W																
AMPERES: 100																
LOAD SERVED	CONNECTED LOAD (KVA)			CIRCUIT BREAKER		CKT NO.		CKT NO.	CIRCUIT BREAKER		CONNECTED LOAD (KVA)			LOAD SERVED
	A	B	C	AMPS	POLES				AMPS	POLES	A	B	C	
PUMP STATION LIGHTS	.60			20	1	1		2	20	1	0.2			LANDSCAPE CONTROLLER
INDOOR RECEPTACLES		1.08		20*	1	3		4	20	1		0.5		OUTSIDE LIGHTS
OUTDOOR RECEPTACLES			.36	20*	1	5		6	20	1			.53	EF-1
MCC ROOM LIGHTS	.14			20	1	7		8	20	1				SPARE
DELETED ~~IRRIGATION CONTROLLER~~		~~0.2~~		~~20~~	~~1~~	~~9~~		10	20	1				~~SPARE~~ EC-1 CONTROL POWER
RTU			0.3	20	1	11		12	20	1			.53	EF-2
A/C UNIT	.68			20	1	13		14	20	1				INTRUSION HORN
SPARE				20	1	15		16	20	1				SPARE
SPARE				20	1	17		18	20	1				SPARE
SUB-TOTAL	1.42	1.28	.39								0.2	0.5	1.06	SUB-TOTAL
MAIN BKR														
ØA: 1.62 KVA= 13.5 AMPS @ 120V														
ØB 1.78 KVA= 14.8 AMPS @ 120V														
ØC 1.72 KVA= 14.3 AMPS @ 120V														

LOCATION: VACUUM PUMP ROOM
MAIN: 30/3 MCB
PANEL MOUNTING: WALL

TOTAL CONNECTED LOAD= 5.12 KVA: 14.2 AMPS @ 208V, 3Ø

NOTE: BREAKERS DENOTED WITH AN * SHALL BE GFCI TYPE

REVISED OCT. 17, 2002

INSTRUMENTATION ONE-LINE DIAGRAM

NOTE: SEE AIRVAC DRAWING FOR DETAILED WIRING.

MCC ONE-LINE DIAGRAM

NOTE: SEE AIRVAC DRAWING FOR DETAILED WIRING.

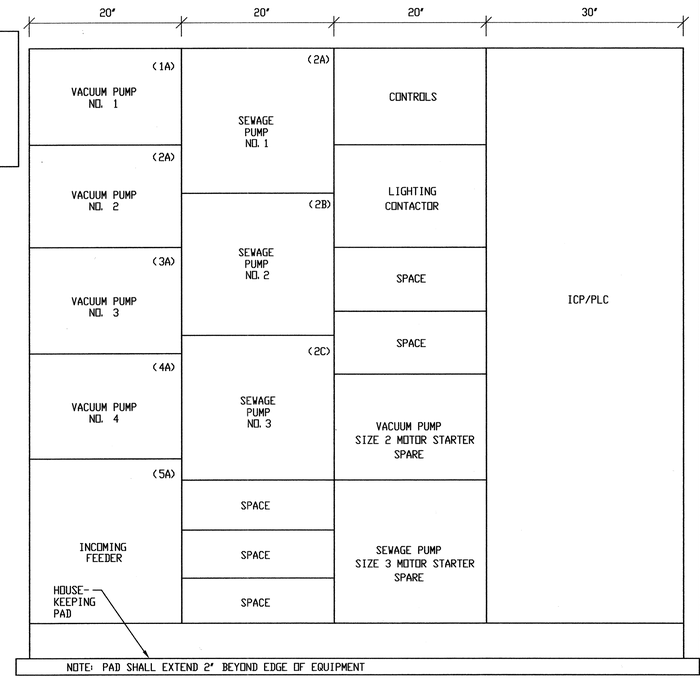

MCC (BY AIRVAC) - ELEVATION

NOT TO SCALE

PUMP STATION LOAD CALCULATIONS

	HP or kVA	FULL LOAD AMPS@480V
VACUUM PUMP NO. 1	25	34
VACUUM PUMP NO. 2	25	34
VACUUM PUMP NO. 3	25	34
VACUUM PUMP NO. 4	25*	34*
VACUUM PUMP NO. 1 HEATER	1.5 (@277V)	1.8
VACUUM PUMP NO. 2 HEATER	1.5 (@277V)	1.8
VACUUM PUMP NO. 3 HEATER	1.5 (@277V)	1.8
VACUUM PUMP NO. 4 HEATER	1.5* (@277V)	1.8*
SEWAGE PUMP NO. 1	20	27
SEWAGE PUMP NO. 2	20	27
SEWAGE PUMP NO. 3	20*	27*
~~MAKEUP AIR UNIT MU-1~~	~~40.75~~ 20.00	~~49~~ 25.4
LIGHTING TRANSFORMER	9	11
SUBTOTAL LOAD	~~164.75~~ 145.5	~~221.4~~ 197.8
25 % LARGEST LOAD		~~12~~ 8.5
TOTAL LOAD - AMPS		~~233.4~~ 206.3

	HP OR KVA	FULL LOAD AMPS @480V
UNIT HEATER NO. 1	7.5 KW	9
UNIT HEATER NO. 2	7.5 KW	9
EVAP. COOLER EC-1	5	7.4

* - DENOTES DEDICATED SPARE AND IS NOT COUNTED IN LOAD CALCULATIONS

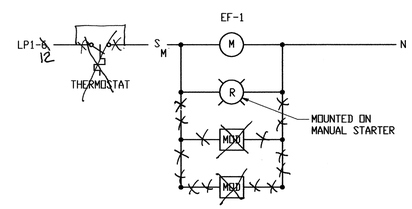

EF-1 CONTROL DIAGRAM

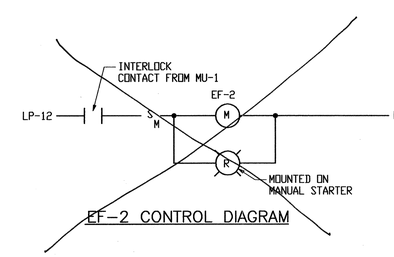

EF-2 CONTROL DIAGRAM

AS BUILT INFORMATION
CONTRACTOR DATE
WORK STAKED BY DATE
INSPECTOR'S ACCEPTANCE BY DATE
AGENCY VERIFICATION BY DATE
DRAWINGS CORRECTED BY DATE
MICRO-FILM INFORMATION
RECORDED BY DATE
NO.

BENCH MARKS
See SH. 2

SURVEY INFORMATION
FIELD NOTES
NO. BY DATE

ENGINEER'S SEAL
DAVID F. RESINDER NEW MEXICO (2027) REGISTERED PROFESSIONAL ENGINEER
4-8-02

NO.	DATE	REMARKS	BY
		REVISIONS	
		DESIGN	

DESIGNED BY DB DATE NOV 2001
DRAWN BY RAG DATE NOV 2001
CHECKED BY WFZ DATE NOV 2001

HDR
HDR Engineering, Inc.

BERNALILLO COUNTY
PUBLIC WORKS DIVISION

TITLE: PAJARITO AREA VACUUM STATION
ONE LINE DIAGRAMS

Design Review Committee: SEP 11 2002
City Engineer Approval: SEP 12 2002
Last Design Update

Mo./Day/Yr.	Mo./Day/Yr.

PROJECT NO. TS - 01 - 13 COA - 647292
MAP NO. Q-10, R-10
SHEET E-04 OF 6

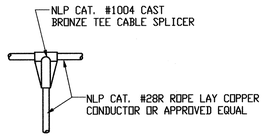

TYPICAL TEE CABLE SPLICE

NOT TO SCALE

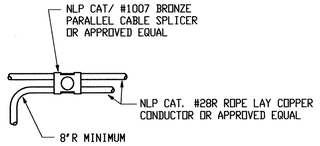

TYPICAL CABLE SPLICE DETAIL

NOT TO SCALE

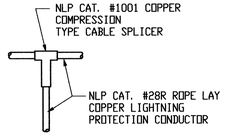

TYPICAL TEE CABLE SPLICE DETAIL

NOT TO SCALE

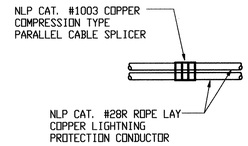

TYPICAL PARALLEL
CABLE SPLICE DETAIL

NOT TO SCALE

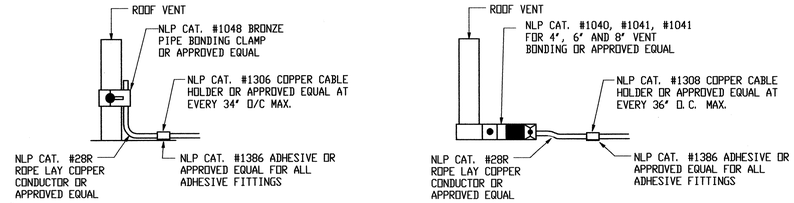

TYPICAL ROOF VENT BONDING DETAIL

NOT TO SCALE

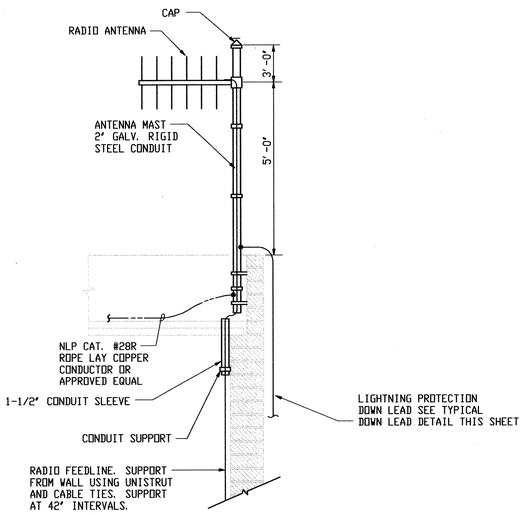

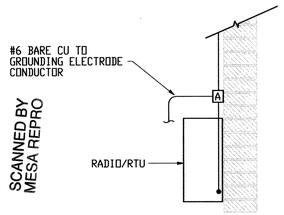

NOTE:

RADIO/RTU, ANTENNA AND RADIO FEEDLINE TO BE PROVIDED BY CONTRACTOR. SEE SPECIFICATIONS. CONTRACTOR SHALL INSTALL FIELD CONTROL WIRING TO RADIO/RTU TERMINAL BLOCK. CONTRACTOR TO MOUNT RADIO/RTU ENCLOSURE, INSTALL RADIO FEEDLINE AND ANTENNA PLUS SUPPORTS AS REQUIRED. CONTRACTOR TO PROVIDE 120V AC POWER SUPPLY TO RADIO/RTU. OWNER WILL TERMINATE RADIO FEEDLINE. OWNER WILL MOUNT RADIO INSIDE ENCLOSURE.

ANTENNA MOUNTING DETAIL

NOT TO SCALE

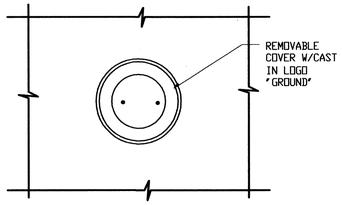

PLAN

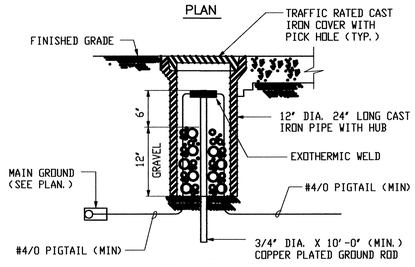

NOTE:
SEE SYSTEM GROUNDING
ONE LINE ON SHEET 18.

SECTION

ELECTRICAL GROUND WELL DETAIL

NOT TO SCALE
(PROVIDE AT EACH GROUND ROD LOCATION)

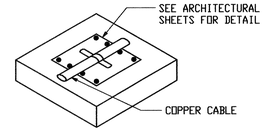

TYPICAL ADHESIVE CABLE HOLDER

NOT TO SCALE

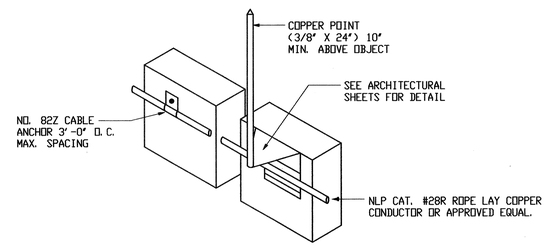

TYPICAL OFFSET AIR TERMINAL

NOT TO SCALE

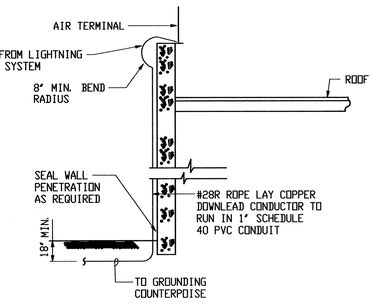

TYPICAL DOWNLEAD DETAIL

NOT TO SCALE

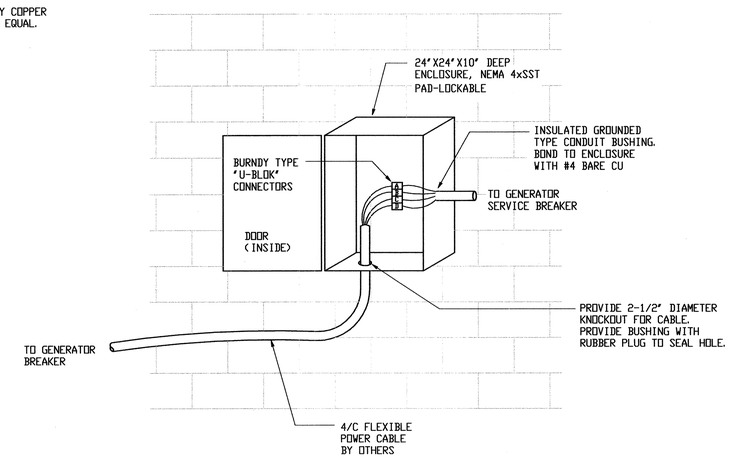

GENERATOR TERMINAL BOX CONNECTION DETAIL

NOT TO SCALE

LIGHTING FIXTURE SCHEDULE

SYMBOL	LAMP	MOUNTING/ HEIGHT	DESCRIPTION	MANUF/MODEL NO.	MANUF/MODEL NO.	STYLE
1	F32T8-CW	PENDANT/ 10'-0" AFF	2-LAMP, 120V, HEAVY DUTY INDUSTRIAL FLUORESCENT, 10% UP-LIGHT, RAPID START, ENERGY SAVING ELECTRONIC BALLAST.	METALUX/DMN-232-120V-EB81-POR-CEP	LITHONIA/ AF10-232-PO-120-GEB	
2	70W CLEAR HPS	WALL/ AS NOTED	120V, SHOEBOX TYPE SHARP CUTOFF LUMINAIRE; DARK BRONZE POLYESTER POWDER COAT, SPECULAR ALUMINUM REFLECTOR; ONE-PIECE DIE-CAST ALUMINUM DOOR WITH CLEAR FLAT TEMPERED GLASS LENS.	LUMARK/ HPHR-AC-70-120V-PER-VS/HR	KIM/ WD14D/ 70HPS/DB/P/A/30/SF	
3	100W CLEAR HPS	12FT POLE; ALUMINUM SQUARE, NON-TAPERED (SEE NOTE 1)	120V, SHOEBOX TYPE SHARP CUTOFF LUMINAIRE; DARK BRONZE POLYESTER POWDER COAT, SPECULAR ALUMINUM REFLECTOR; ONE-PIECE DIE-CAST ALUMINUM DOOR WITH CLEAR FLAT TEMPERED GLASS LENS.	LUMARK/ HPHR-AC-100-120V-PER-VS/HR	KIM/ EKG401/ 100HPS/120/DB-A/A-25	
	8 WATT HALOGEN	WALL 8'-0" AFF	MAINTENANCE FREE LEAD CALCIUM BATTERY EMERGENCY LIGHT COMPLYING WITH NEMA 4X AND NEMA 12 RATINGS. 12 V OUTPUT; 120 VAC INPUT POWER SUPPLY.	EXIDE/LIGHTGUARD LTC125XW2ACF1		

NOTES FOR LIGHTING FIXTURES

1. PROVIDE BREAKOVER POLE, KW INDUSTRIES THSP-30-6.25-11-P-DM-BC. ARROW INDICATES DIRECTION THE POLE SHALL BREAK FOR LOWERING.
2. LIGHTING FIXTURE DENOTED BY "PE" SHALL BE OPERATED BY A PHOTO-CELL.

GENERAL NOTES ON LIGHTNING PROTECTION

1. DEVICE AND COMPONENT NUMBERS CALLED OUT ARE SPECIFIC TO NATIONAL LIGHTNING PROTECTION CORPORATION, UNLESS OTHERWISE NOTED.
2. SEE SPECIFICATIONS FOR ADDITIONAL REQUIREMENTS.
3. CONDUCTOR BEND SHALL NOT FORM A SHARPER ANGLE THAN 90 DEGREES OR HAVE A RADIUS LESS THAN 8 INCHES.
4. METAL BODIES OF INDUCTANCE LOCATED WITHIN 6' OF MAIN LIGHTNING CONDUCTORS SHALL BE BONDED TO THE LIGHTNING PROTECTION SYSTEMS.
5. CONNECTIONS TO GROUND AND COUNTERPOISE SHALL BE MADE AT A POINT NOT LESS THAN 2'-0" BELOW GRADE, AND 3'-0" AWAY FROM FOUNDATION WALL.
6. JOB CONDITIONS MAY DICTATE SLIGHT VARIATIONS IN AIR TERMINAL AND GROUND LOOP LOCATIONS.
7. CONDUCTORS SHALL MAINTAIN A HORIZONTAL OR DOWNWARD PATH FREE FROM "U" AND "V" POCKETS. ANY RISE IN HORIZONTAL CONDUCTOR SHALL NOT EXCEED 6 INCHES.
8. AIR TERMINAL SHALL BE PLACED AT THE LOCATIONS INDICATED. NOT MORE THAN 2'-0" FROM THE ENDS OF RIDGES, OUTSIDE CORNERS OR OUTSIDE EDGES OF MAIN ROOFS AND MUST EXTEND A MINIMUM OF 10' ABOVE THE OBJECT TO BE PROTECTED.
9. COPPER LIGHTNING PROTECTION MATERIALS SHALL NOT BE PLACED ON ALUMINUM SURFACES, NOR SHALL ALUMINUM MATERIALS BE PLACED ON COPPER SURFACES.
10. ALL STRUCTURAL STEEL SHALL BE MADE ELECTRICALLY CONTINUOUS THROUGH CONSTRUCTION.
11. ELECTRIC AND ANTENNA SYSTEM GROUNDS SHALL BE CONNECTED WITH #4/0 COPPER CONDUCTOR TO ONE LIGHTNING PROTECTION GROUND.
12. A LIGHTNING ARRESTOR, PROTECTOR OR ANTENNA-DISCHARGE UNIT MUST BE INSTALLED ON EACH ELECTRIC SERVICE ENTRANCE AND RADIO ANTENNA LEAD IN.
13. THE GENERAL CONTRACTOR IS RESPONSIBLE FOR MAKING ALL REBAR ELECTRICALLY CONTINUOUS.
14. ALL ADHESIVE FIXTURES SHALL BE SET WITH AN ADHESIVE COMPOUND COMPATIBLE WITH THE ROOFING MATERIAL. ADHESIVES SHALL BE APPROVED IN ADVANCE BY THE ROOFING CONTRACTOR.
15. SEAL THE ENDS OF CONDUIT MOISTURE TIGHT WITH DUCT SEAL, SILICONE OR LEAD WEDGES.
16. ALL EXOTHERMIC WELDS MUST BE INSPECTED BY THE OWNER'S REPRESENTATIVE OR THE INSPECTOR AND THE ENGINEER.
17. SEE ARCHITECTURAL FOR ROOF PENETRATIONS AND PARAPET MOUNTING DETAILS.

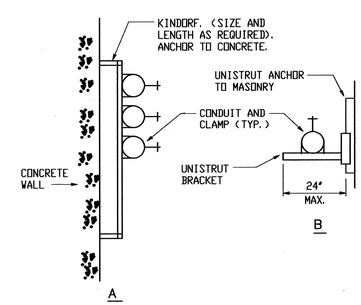

CONDUIT SUPPORT FROM WALL

NOT TO SCALE

AS BUILT INFORMATION

	DATE
CONTRACTOR	
WORK STAKED BY	see
INSPECTOR'S ACCEPTANCE BY	SHEET
VERIFICATION BY	
DRAWINGS CORRECTED BY	
MICRO-FILM INFORMATION	
RECORDED BY	
NO.	

BENCH MARKS

NO.	DATE	BY	REMARKS

REVISIONS

DESIGN

DESIGNED BY	DB	DATE NOV 2001
DRAWN BY	RAG	DATE NOV 2001
CHECKED BY	WFZ	DATE NOV 2001

SURVEY INFORMATION

FIELD NOTES

NO.	BY	DATE

ENGINEER'S SEAL

DAVID F. BESINGER
NEW MEXICO
12027
REGISTERED PROFESSIONAL ENGINEER
11-8-02

HDR

HDR Engineering, Inc.

BERNALILLO COUNTY
PUBLIC WORKS DIVISION

TITLE: PAJARITO AREA VACUUM STATION

DETAILS

Design Review Committee: SEP 11 2002 DESIGN REVIEW COMMITTEE

City Engineer Approval: SEP 12 2002 CITY ENGINEER

Last Design Update | Mo./Day/Yr. | Mo./Day/Yr.

PROJECT NO.	MAP NO.	SHEET	OF
TS - 01 - 13 COA - 647291	Q-10, R-10	E-05	6

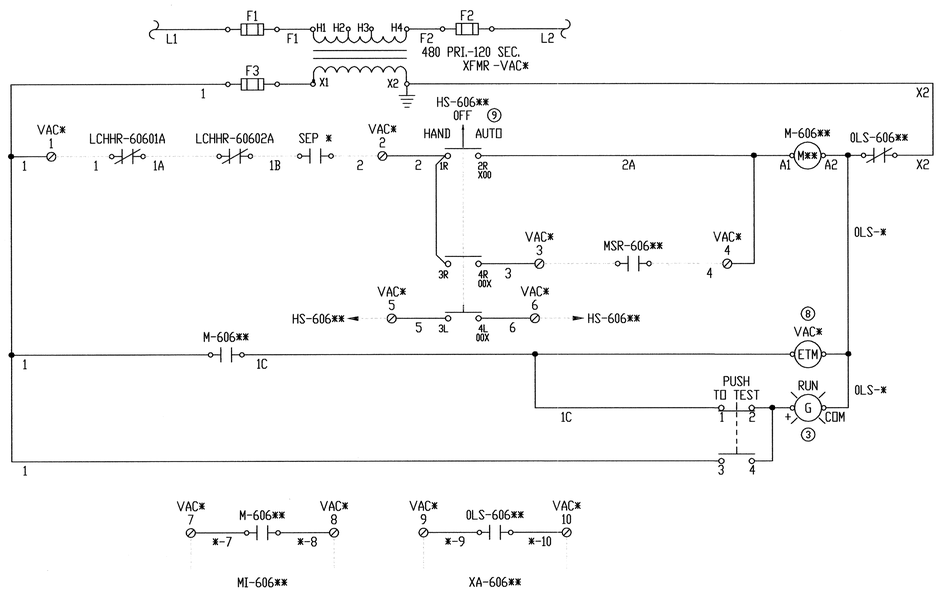

TYPICAL VACUUM PUMP SCHEMATIC

REPLACE * WITH APPROPRIATE VACUUM PUMP NUMBER (IE: VAC 1)
REPLACE ** WITH APPROPRIATE PUMP TAG NUMBER (IE: 60611 FOR VAC 1)
TAG NUMBER WILL PRECEDE WIRE NUMBER (IE: 60611-1 WILL BE WIRE #1 OF VAC 1)

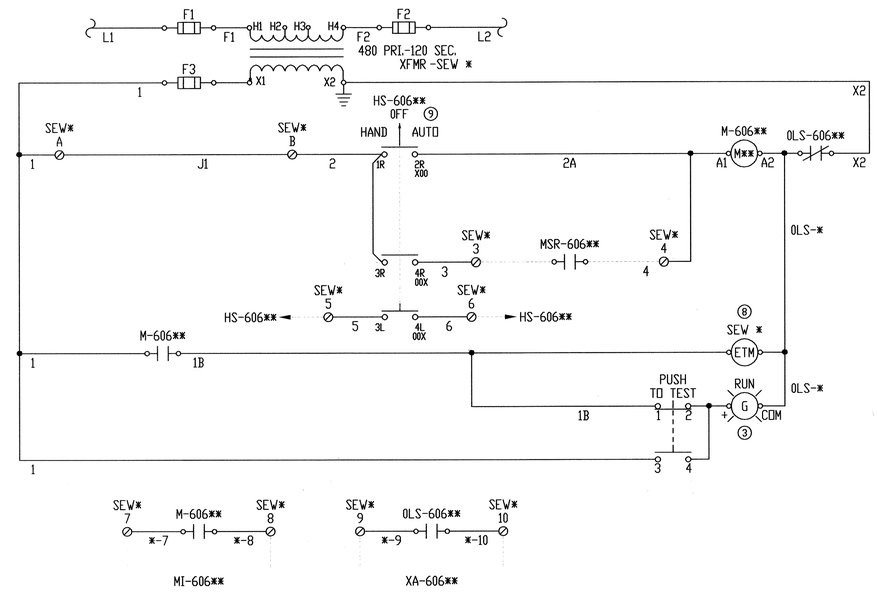

TYPICAL SEWAGE PUMP SCHEMATIC

REPLACE * WITH APPROPRIATE SEWAGE PUMP NUMBER (IE: SEW 1)
REPLACE ** WITH APPROPRIATE SEWAGE PUMP TAG NUMBER (IE: 60621 FOR SEW 1)
TAG NUMBER WILL PRECEDE WIRE NUMBER (IE: 60621-1 WILL BE WIRE #1 OF SEW 1)

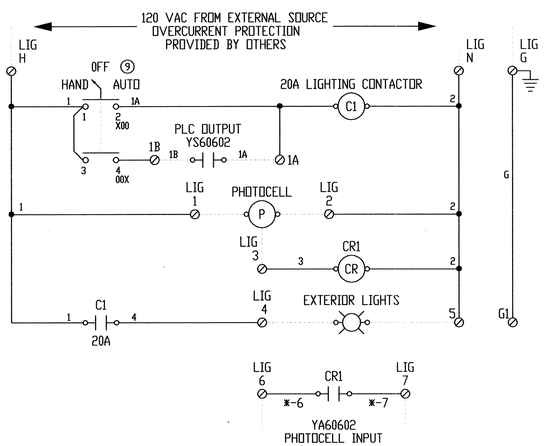

EXTERIOR LIGHTING CONTROLS

LEGEND

- ⊘ TERMINAL BLOCK IN MOTOR STARTER CUBICLES
- ◉ TERMINAL BLOCK IN DIGITAL INPUT STRIP OF PC
- ▣ TERMINAL BLOCK IN DIGITAL OUTPUT STRIP OF PC
- ⊗ TERMINAL BLOCK IN ANALOG INPUT STRIP OF PC
- ☐ TERMINAL BLOCK IN AC STRIP OF PC

AS BUILT INFORMATION
CONTRACTOR DATE
WORK STAKED BY See DATE
INSPECTOR'S ACCEPTANCE BY Sh. 2 DATE
FIELD VERIFICATION BY DATE
DRAWINGS CORRECTED BY DATE
MICRO-FILM INFORMATION
RECORDED BY DATE
NO.

BENCH MARKS

SURVEY INFORMATION
FIELD NOTES
NO. BY DATE

ENGINEER'S SEAL
DAVID F. BESINGER
NEW MEXICO
12022
REGISTERED PROFESSIONAL ENGINEER
4-8-02

NO.	DATE	REMARKS	BY
		REVISIONS	

DESIGN

DESIGNED BY	DB	DATE NOV 2001
DRAWN BY	RAG	DATE NOV 2001
CHECKED BY	WFZ	DATE NOV 2001

HDR
HDR Engineering, Inc.

BERNALILLO COUNTY
PUBLIC WORKS DIVISION

TITLE: PAJARITO AREA VACUUM STATION
CONTROL DIAGRAMS

Design Review Committee: APPROVED SEP 11 2002 DESIGN REVIEW COMMITTEE
City Engineer Approval: APPROVED SEP 12 2002 CITY ENGINEER
Last Design Update
Mo./Day/Yr. Mo./Day/Yr.

PROJECT NO.	MAP NO.	SHEET	OF
TS – 01 – 13 COA – 647292	Q–10, R–10	E–06	6

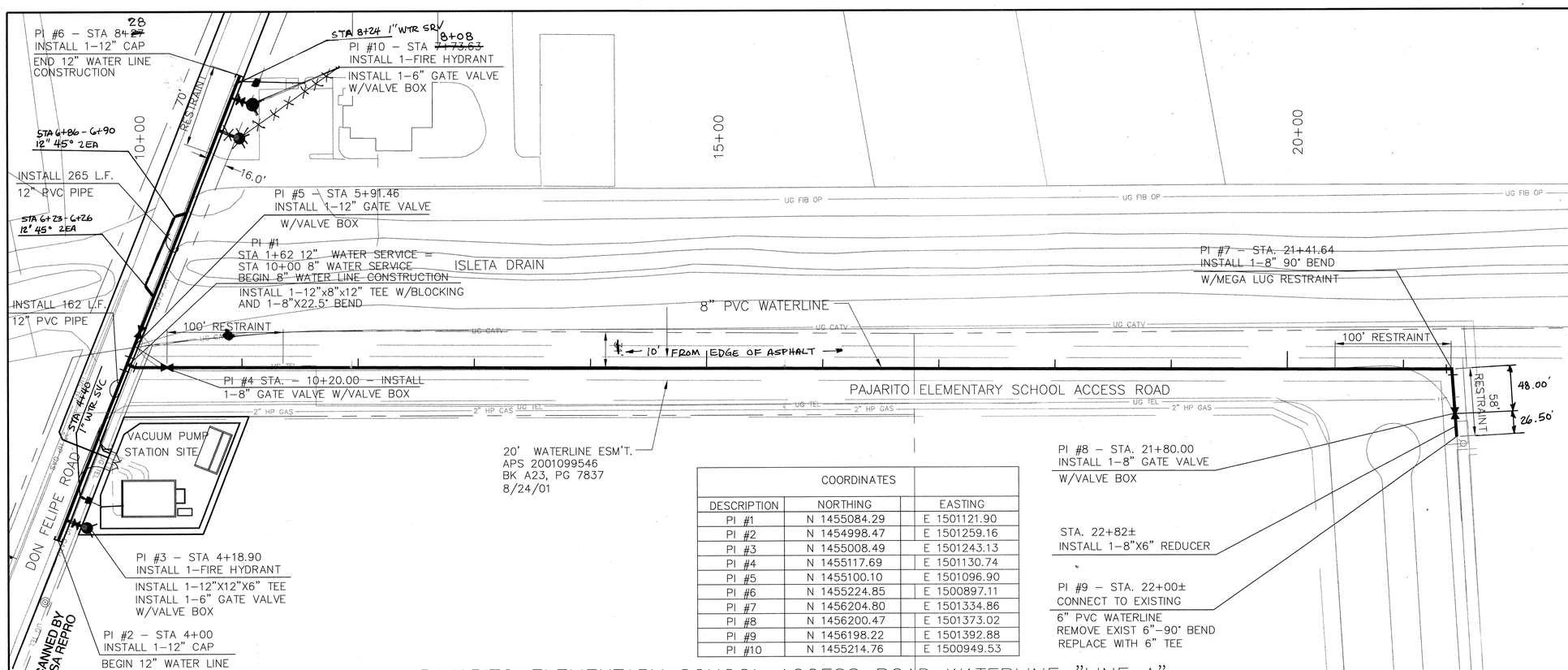

COORDINATES		
DESCRIPTION	NORTHING	EASTING
PI #1	N 1455084.29	E 1501121.90
PI #2	N 1454998.47	E 1501259.16
PI #3	N 1455008.49	E 1501243.13
PI #4	N 1455117.69	E 1501130.74
PI #5	N 1455100.10	E 1501096.90
PI #6	N 1455224.85	E 1500897.11
PI #7	N 1456204.80	E 1501334.86
PI #8	N 1456200.47	E 1501373.02
PI #9	N 1456198.22	E 1501392.88
PI #10	N 1455214.76	E 1500949.53

PAJARITO ELEMENTARY SCHOOL ACCESS ROAD WATERLINE "LINE A"

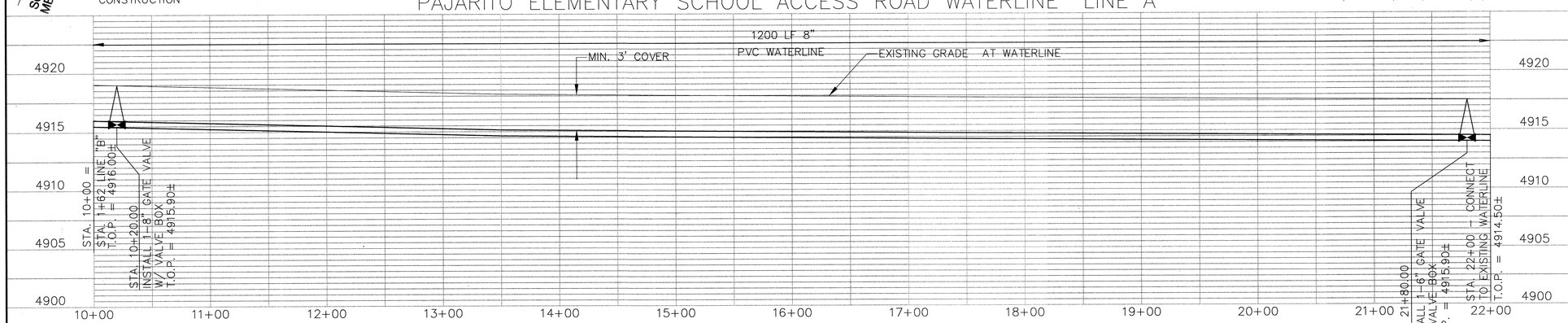

DON FELIPE ROAD WATERLINE "LINE B"

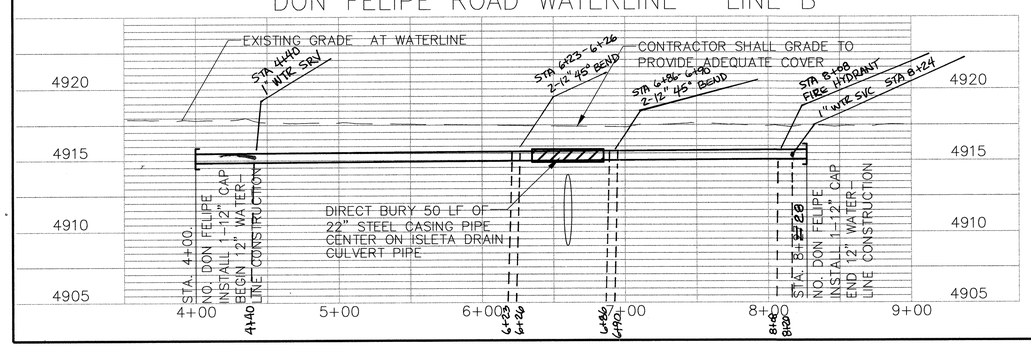

PLAN
SCALE: 1"=50'

PROFILE
SCALE: 1"=50'
1"=5'

0 10 30 50 100
GRAPHIC SCALE IN FEET

NOTES:
1. PRIOR TO BEGINNING WATER LINE CONSTRUCTION, CONTRACTOR MUST COORDINATE SCHEDULE AND POSSIBLE OTHER CONSIDERATIONS WITH APS AND PAJARITO ELEMENTARY SCHOOL.
2. PUMP STATION CONTRACTOR TO CO–ORDINATE & VERIFY HORIZONTAL & VERTICAL LOCATIONS OF SITE UTIL–ITIES. SEE SITE PIPING PLAN FOR PUMP STATION WATER SERVICE CONNECTION.
3. ALL MJ FITTINGS AND APPURTE–NANCES ARE TO BE RESTRAINED USING MEGAPLUG MECHANICAL JOINT RESTRAINTS.
4. FIRE HYDRANT INSTALLATIONS ARE TO BE PER COA STD. DWG. 2340
5. SEE SHEET C-02 FOR VACUUM PUIMP STATION WATER SERVICE.

AS BUILT INFORMATION
CONTRACTOR / WORK STAKED BY / INSPECTOR / ACCEPTANCE BY / FIELD VERIFICATION BY / DRAWINGS CORRECTED BY — DATE
See Sht. 2

BENCH MARKS
ACS. Aluminum Cap, "2R–10", Don Felipe Road SW
NM (HPGN) Central Zone, NAD83 (Us.ft.)
N= 1 454 487.97, E= 1 502 103.18
(Converted from NAD27 using Corpscon V.5.11.05)
Elevation= 4918.05 NAVD88 (Us.Ft.)
[4918.05 (NAVD88) – 2.61 = 4915.44 (NGVD29)]

MICRO–FILM INFORMATION
RECORDED BY — DATE
NO.

SURVEY INFORMATION
FIELD NOTES

NO.	BY	DATE

ENGINEER'S SEAL

NO.	DATE	REMARKS	BY

REVISIONS

DESIGN		
DESIGNED BY	WFZ	DATE NOV 2001
DRAWN BY	RAG	DATE NOV 2001
CHECKED BY	WFZ	DATE NOV 2001

HDR
HDR Engineering, Inc.

BERNALILLO COUNTY
PUBLIC WORKS DIVISION

TITLE: PAJARITO AREA VACUUM STATION
NEW WATER LINES

Design Review Committee — APPROVED SEP 11 2002
City Engineer Approval — APPROVED SEP 12 2002
Last Design Update — Mo./Day/Yr. — Mo./Day/Yr.

PROJECT NO. TS – 01 – 13 COA – 647292 | MAP NO. Q–10, R–10 | SHEET W–01 | OF 1