674902

# CENTRAL - ATRISCO DRAINAGE IMPROVEMENTS

## INDEX OF SHEETS



# CITY OF ALBUQUERQUE

## NEW MEXICO


**VICINITY MAP**

ZONE ATLAS K–12–Z
SCALE: 1" = 200'

*UTILITY CONTACTS:*

*PNM Electric & Gas Co.*
*Electric*
*Terry Moynihan*
*Phone (505) 241–3304*
*Gas*
*Jack Cole*
*Phone (505) 241–7770*

*Qwest Communications*
*Mary Ann Jojola*
*Phone (505) 245–6587*

*Comcast Cable Television Co.*
*John Safley*
*Phone (505) 761–6261*

*New Mexico One Call System*
*Phone (505) 260–1990*

*Water Systems Division*
*Phone (505) 857–2000*

CENTRAL 46th/47th


LARKIN GROUP, P.A., INC.
8500 MENAUL NE. SUITE A–440
ALBUQUERQUE, NEW MEXICO 87112
TELEPHONE (505) 275–7500
FAX (505) 275–0748


| REV. | SHEETS | CITY ENGINEER | DATE | USER DEPARTMENT | DATE | USER DEPARTMENT | DATE |
|---|---|---|---|---|---|---|---|
| | | | | | | | |
| | | | | | | | |
| | | | | | | | |

ENGINEER'S STAMP & SIGNATURE

RICHARD LOVATO NEW MEXICO 6823 REGISTERED PROFESSIONAL ENGINEER

| APPROVALS | ENGINEER | DATE |
|---|---|---|
| DRC Chairman | | |
| Transportation | | |
| Water/Wastewater | | |
| Hydrology | | |
| Parks | | |
| Constr. Coord. | | |
| | | |

APPROVED FOR CONSTRUCTION

City Engineer Date

City Project No. 674902

Sheet 1 Of 21

SET NUMBER

SEP 26 2000

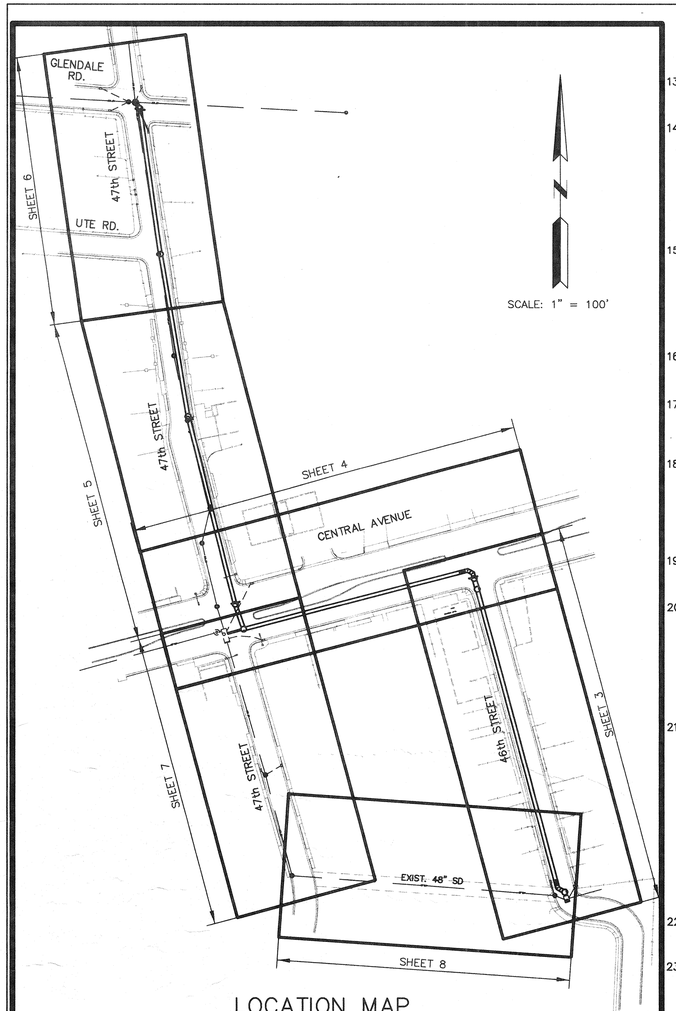

## LOCATION MAP

SCALE: 1" = 100'

## GENERAL NOTES

1. ALL WORK DETAILED ON THESE PLANS TO BE PERFORMED UNDER THIS CONTRACT SHALL, EXCEPT AS OTHERWISE STATED OR PROVIDED FOR HEREON, BE CONSTRUCTED IN ACCORDANCE WITH CITY OF ALBUQUERQUE STANDARD SPECIFICATIONS FOR PUBLIC WORKS CONSTRUCTION, 1986 EDITION, AS AMENDED THROUGH UPDATE NO. 6.

2. REFERENCES MADE TO STANDARD DRAWINGS REFER TO CITY OF ALBUQUERQUE STANDARD DRAWINGS.

3. TWO (2) WORKING DAYS PRIOR TO ANY EXCAVATION, CONTRACTOR MUST CONTACT NEW MEXICO ONE CALL SYSTEM (260–1990), FOR LOCATION OF EXISTING UTILITIES. CONTRACTOR IS RESPONSIBLE FOR ANY DAMAGE TO EXISTING UTILITIES.

4. PRIOR TO CONSTRUCTION, THE CONTRACTOR SHALL EXCAVATE AND VERIFY THE HORIZONTAL AND VERTICAL LOCATIONS OF ALL OBSTRUCTIONS. SHOULD A CONFLICT EXIST, THE CONTRACTOR WILL NOTIFY THE ENGINEER IMMEDIATELY SO THAT THE CONFLICT CAN BE RESOLVED WITH A MINIMUM AMOUNT OF DELAY. THIS WORK IS CONSIDERED INCIDENTAL TO THE PROJECT AND NO DIRECT PAYMENT WILL BE MADE THEREFORE.

5. THE CONTRACTOR SHALL MAINTAIN ALL UTILITY LINES WHICH ARE NOT SPECIFICALLY DESIGNATED TO BE REMOVED AND REPLACED ON THE PLANS. EMPLOY SHORING, SHEETING, TRENCH BOXES AND OTHER MEANS OF SUPPORT TO PREVENT DAMAGE OR LOSS OF THESE EXISTING UTILITIES. BEAM AND CABLE OR OTHER ADEQUATE SUPPORTS SHALL BE USED FOR TEMPORARY SUPPORT OF ALL UTILITY LINES WHICH CROSS THE TRENCH. SUPPORT OF EXISTING UTILITY LINES WILL BE CONSIDERED INCIDENTAL TO THE CONTRACT AND NO SEPARATE PAYMENT WILL BE MADE THEREFORE. ANY DAMAGE TO EXISTING UTILITIES SHALL BE PROMPTLY REPAIRED AT THE CONTRACTORS EXPENSE. THE CONTRACTOR SHALL IMMEDIATELY NOTIFY THE ENGINEER OF ANY SIGNIFICANT DEVIATION OF UTILITIES FROM THE LOCATIONS SHOWN ON THE PLANS SO THAT CONFLICTS CAN BE RESOLVED IN A TIMELY MANNER.

6. ALL EXCAVATION SHALL BE GOVERNED BY FEDERAL, STATE AND LOCAL LAWS, RULES AND REGULATIONS CONCERNING CONSTRUCTION SAFETY AND HEALTH, OSHA 29 CFR 1926.650. ALL EXCAVATION, TRENCHING, AND SHORING ACTIVITIES MUST BE CARRIED OUT IN ACCORDANCE WITH OSHA 29 CFR 1926.650 SUBPART P.

7. ALL UTILITIES AND UTILITY SERVICE LINES SHALL BE INSTALLED PRIOR TO PAVING.

8. BACKFILL AND COMPACTION SHALL BE ACCORDING TO SPECIFIED STREET USE.

9. TACK COAT REQUIREMENTS SHALL BE DETERMINED BY THE ENGINEER.

10. WHEELCHAIR RAMPS WITHIN THE CURB RETURNS SHALL BE CONSTRUCTED AS SHOWN PER CITY STANDARD DRAWINGS.

11. CONTRACTOR SHALL PROVIDE SUBGRADE PREPARATION UNDER ALL NEW PAVEMENT, CURBS AND GUTTERS, SIDEWALKS, VALLEY GUTTERS AND CONCRETE FILLETS. MEASUREMENT FOR PAYMENT OF SUBGRADE PREPARATION UNDER PAVEMENT SHALL BE FROM THE LIP OF GUTTER TO THE LIP OF GUTTER OR TO THE EDGE OF PAVEMENT WHERE APPLICABLE. SUBGRADE PREPARATION UNDER CONCRETE IMPROVEMENTS SUCH AS SIDEWALK, DRIVE PADS, CURB AND GUTTERS ETC. SHALL BE INCLUDED IN THE UNIT BID PRICE FOR THE BID ITEM TO WHICH THE SUBGRADE PREPARATION PERTAINS.

⑫ IT IS EXPECTED THAT THE EARTHWORK WILL BE REASONABLY BALANCED. HOWEVER, THE CONTRACTOR WILL BE RESPONSIBLE FOR FURNISHING BORROW MATERIAL OR HAULING OFF EXCESS MATERIAL. THE TRANSPORTATION AND/OR DISPOSAL OF THESE MATERIALS SHALL BE CONSIDERED INCIDENTAL TO THE BID ITEM FOR SUBGRADE PREPARATION. ALL EXCAVATED MATERIAL THAT IS NOT REQUIRED TO BE REUSED MUST BE REMOVED FROM THE PROJECT AREA WITHIN FOUR DAYS OF EXCAVATION. SPOIL PILES WILL BE ALLOWED ONLY AS DIRECTED BY THE CITY FIELD ENGINEER.

13. WHERE REMOVAL OF EXISTING CURB AND GUTTER IS REQUIRED, SUCH REMOVAL SHALL BE MADE BACK TO THE NEAREST JOINT BEYOND THE REMOVAL REQUIRED.

14. CURB AND GUTTER SHOWN AS EXISTING AND NOT TO BE REMOVED UNDER THE CONTRACT WHICH IS DAMAGED OR DISPLACED BY THE CONTRACTOR SHALL BE REMOVED AND REPLACED BY THE CONTRACTOR AT HIS OWN EXPENSE. THE CONTRACTOR SHALL SUITABLY PROTECT THE CURB AND GUTTER FROM INCIDENTAL SPLASHING DURING THE TACK COAT APPLICATION AND WILL BE RESPONSIBLE FOR CLEANING SAME AT HIS OWN COST SHOULD SPLASHING OCCUR.

15. WHEN ABUTTING NEW PAVEMENT TO EXISTING, CUT BACK EXISTING PAVEMENT TO A NEAT STRAIGHT LINE AS REQUIRED TO REMOVE ANY BROKEN OR CRACKED PAVEMENT, AND MATCH NEW TO EXISTING. NO SEPARATE PAYMENT SHALL BE MADE FOR SAW CUTTING OF EXISTING PAVEMENT BUT SHALL BE CONSIDERED INCIDENTAL TO THE PROJECT. CUTTING OF PAVEMENT SHALL BE IN COMFORMANCE WITH THE SPECIFICATIONS.

16. WHEN CONSTRUCTION UNDER THIS PROJECT CONNECTS TO EXISTING PAVEMENT, THE CONTRACTOR SHALL PROVIDE A SMOOTH RIDING CONNECTION.

17. MATCH FLOW LINES OF GUTTER WHEN CONNECTING NEW CURB AND GUTTER TO EXISTING. IF NEW CURB HEIGHT IS DIFFERENT FROM EXISTING, TRANSITION TO NEW CURB HEIGHT IN FIVE FEET.

18. NO SEPARATE PAYMENT WILL BE MADE FOR RE–GRADING NEW MANHOLE FRAMES AND COVERS OR VALVE BOXES THAT ARE CONSTRUCTED AND INSTALLED UNDER THIS CONTRACT. ANY RE–GRADING WORK REQUIRED TO ADJUST THESE ITEMS TO FINISH GRADE SHALL BE CONSIDERED INCIDENTAL TO THE CONSTRUCTION OF THE MANHOLE OR VALVE BOX AS APPLICABLE.

19. EXERCISE CARE TO AVOID DISTURBING EXISTING UTILITIES, AND COORDINATE WITH THE UTILITY COMPANIES IN ORDER TO PREVENT ANY SERVICE DISRUPTION.

20. RELOCATION OF EXISTING UTILITIES AND THE INSTALLATION OF NEW UTILITY LINES WILL BE COMPLETED IN ADVANCE OF STARTING THE PAVEMENT WORK. PLACE TEMPORARY PAVEMENT IN ALL TRENCHES REQUIRED FOR THE UTILITY REPLACEMENTS IN THOSE AREAS THAT MUST MAINTAIN TRAFFIC UNTIL THE PAVEMENT WORK STARTS IN EACH AREA. PAVEMENT REPLACEMENT MUST BEGIN WITHIN SEVEN (7) DAYS OF TRENCH CLOSURE. TEMPORARY STRIPING SHALL BE THE CONTRACTORS RESPONSIBILITY.

21. EXISTING TELEPHONE MANHOLES AND GAS VAULTS WITHIN THE CONSTRUCTION AREA SHALL BE ADJUSTED TO GRADE BY OTHERS. REMOVAL AND/OR RELOCATION OF EXISTING ELECTRIC POWER LINES, GASLINES, TELEPHONE LINES, CABLE TV LINES, AND RELATED POLES, BOXES, METERS, VALVES AND SIMILAR EQUIPMENT SHALL BE PERFORMED BY OTHERS. A LIST OF CONTACTS FOR THOSE RESPONSIBLE FOR ABOVE GRADE ADJUSTMENTS, REMOVAL AND/OR RELOCATIONS PRIOR TO THE START OF CONSTRUCTION IS LISTED BELOW.

    TERRY MOYNIHAN – PNM ELECTRIC– 241–3304
    JACK COLE – PNM GAS – 241–7770
    MARY ANN JOJOLA – QWEST – 245–6587
    JOHN SAFLEY – COMCAST – 761–6261

22. IF THE CONTRACTOR REQUIRES ASSISTANCE WITH SUPPORTING GAS LINES OR SERVICES CALL:
    JACK COLE – PNM GAS – 241–7770

23. THE CONTRACTOR WILL PLACE PERMANENT PAVEMENT STRIPING AND MARKINGS. ROAD SHALL NOT BE OPENED TO TRAFFIC UNTIL IT IS STRIPED. ALL STRIPING, PAVEMENT MARKINGS INCLUDING CROSSWALKS, ARROWS AND LINE MARKINGS ARE TO BE CONSTRUCTED OF HOT PLASTIC OR COLD PLASTIC IN ACCORDANCE WITH THE MANUAL ON UNIFORM TRAFFIC CONTROL DEVICES. ANY PAVEMENT MARKINGS REMOVED OR DISTURBED DURING CONSTRUCTION SHALL BE REPLACED AT EXISTING LOCATIONS BY THE CONTRACTOR AT HIS COST.

24. TWO (2) DAYS PRIOR TO THE PRE–CONSTRUCTION MEETING, CONTRACTOR SHALL SUBMIT A DETAILED CONSTRUCTION SCHEDULE TO THE CITY PROJECT MANAGER. TWO (2) DAYS PRIOR TO CONSTRUCTION, THE CONTRACTOR WILL OBTAIN A BARRICADING PERMIT FROM THE CONSTRUCTION COORDINATION DIVISION. THE CONTRACTOR SHALL NOTIFY BARRICADE ENGINEERS (924–3400) PRIOR TO OCCUPYING AN INTERSECTION. REFER TO SECTION 19 OF STANDARD SPECIFICATIONS FOR PUBLIC WORKS CONSTRUCTION.

25. THE CONTRACTOR SHALL SUBMIT A TRAFFIC CONTROL PLAN TO THE CONSTRUCTION COORDINATION DIVISION FOR APPROVAL AT LEAST FIVE (5) WORKING DAYS PRIOR TO THE START OF CONSTRUCTION. THE TRAFFIC CONTROL PLAN SHALL BE PREPARED IN ACCORDANCE WITH THE "MANUAL OF UNIFORM TRAFFIC CONTROL DEVICES", CURRENT EDITION PUBLISHED BY THE U.S. DEPARTMENT OF TRANSPORTATION, REQUIREMENTS BY A CERTIFIED TCS OR TCT. IT SHALL INCLUDE A COMPLETE SIGNING, BARRICADING AND DETOURING PLAN WITH ALL PHASES OF WORK AND SCHEDULES INVOLVED IN THE CONSTRUCTION PROJECT. WORK SHALL NOT BEGIN UNTIL THE TRAFFIC CONTROL PLAN HAS BEEN APPROVED. NO SEPERATE MEASUREMENT OR PAYMENT WILL BE MADE FOR PREPARATION OF A TRAFFIC CONTROL PLAN. ALL SUCH WORK SHALL BE, CONSIDERED INCIDENTAL TO THE TRAFFIC CONTROL BID ITEM.

26. TRAFFIC CONTROL SHALL INCLUDE THE FURNISHING AND MAINTENANCE OF ALL TRAFFIC CONTROL DEVICES INCLUDING SIGNING, VERTICAL PANELS, BARRELS, BARRICADING, TEMPORARY STRIPING, TEMPORARY SIGNALS, ALL OTHER DEVICES, REQUIRED BY THE "MANUAL ON UNIFORM TRAFFIC CONTROL" AND ANY ITEMS THAT ARE NECESSARY TO COMPLY WITH THE CITY OF ALBUQUERQUE CONSTRUCTION BARRICADING AND TRAFFIC CONTROL DURING CONSTRUCTION OF THIS PROJECT. THE TRAFFIC CONTROL PHASING PLANS INCLUDED WITH THESE DRAWINGS PROVIDES ONE POSSIBLE SCHEME FOR PHASING CONSTRUCTION OF THE PROJECT. THE CONTRACTOR MAY PROVIDE AN ALTERNATIVE PHASING SCHEME IN CONJUNCTION WITH THE TRAFFIC CONTROL PLAN WHICH WILL BE SUBJECT TO APPROVAL BY THE CONSTRUCTION COORDINATOR.

27. THE CONTRACTOR SHALL MAINTAIN TRAFFIC LANES PROVIDED DURING CONSTRUCTION, UNDER ALL WEATHER CONDITIONS, SO AS TO PERMIT THE REASONABLE PASSAGE OF VEHICLES, KEEPING SAID TRAFFIC LANES GRADED, SMOOTH AND WATERED AS NECESSARY.

28. ALL ARTERIAL OR COLLECTOR ROADWAYS WITHIN THIS PROJECT CONSTRUCTION AREA SHALL BE POSTED AS "DOUBLE FINE ZONES". PAYMENT FOR THESE SIGNS SHALL BE INCLUDED IN THE LUMP SUM TRAFFIC CONTROL BID ITEM.

29. CONTRACTOR SHALL COORDINATE WITH WATER SYSTEMS DIVISION (857–2000) SEVEN (7) WORKING DAYS IN ADVANCE OF ANY WORK THAT MAY AFFECT EXISTING PUBLIC WATER OR SEWER UTILITIES. EXISTING VALVES TO BE OPERATED BY CITY PERSONNEL ONLY. CONTRACTOR SHALL CONTACT THE WATER SYSTEMS DIVISION SEVEN (7) WORKING DAYS PRIOR TO NEEDING VALVES TURNED ON OR OFF.

30. THE CONTRACTOR SHALL COMPLY WITH ALL FEDERAL, STATE, AND LOCAL LAWS AND REGULATIONS CONTROLLING POLLUTION OF THE ENVIRONMENT. PRIOR TO THE START OF THE PROJECT CONSTRUCTION, THE CONTRACTOR SHALL CONTACT THE AGENCIES RESPONSIBLE FOR AIR, NOISE, AND WATER QUALITY CONTROL REGULATIONS TO DETERMINE THE STANDARDS WHICH SHALL ADHERE DURING CONSTRUCTION OPERATIONS. THE CONTRACTOR SHALL OBTAIN, PREPARE, SUBMIT ALL FORMS, APPLICATIONS PERMITS, AND/OR PLANS REQUIRED TO COMPLY WITH ALL FEDERAL, STATE AND LOCAL LAWS CONTROLLING POLLUTION OF THE ENVIRONMENT. THE CONTRACTOR SHALL ALSO MODIFY ALL PLANS, PERMITS, FORMS, APPLICATIONS AS REQUIRED, AS SITE CONDITIONS CHANGE TO STAY IN COMPLIANCE WITH THESE LAWS AND REGULATIONS. THE CONTRACTOR SHALL BE RESPONSIBLE FOR ANY RECORD KEEPING AND/OR INSPECTIONS ASSOCIATED WITH THESE LAWS AND REGULATIONS. THE CONTRACTOR SHALL PROVIDE THE PROJECT ENGINEER ONE ADDITIONAL COPY OF EACH REQUIRED PLAN, SUBMITTED FORM, OR APPLICATION, AND PLAN UPDATE AS THEY ARE SUBMITTED. THESE RESPONSIBILITIES INCLUDE, BUT ARE NOT LIMITED TO, ENVIRONMENTAL PROTECTION AGENCY (EPA) N.P.D.E.S REQUIREMENTS INCLUDING THE PREPARATION OF AN APPROPRIATE STORM WATER POLLUTION PREVENTION PLAN (SWPPP) FOR THE PROJECT 7 DAYS PRIOR TO CONSTRUCTION. THE CONTRACTOR SHALL FILE THE APPROPRIATE NOTICE OF INTENT (N.O.I.) AND NOTICE OF TERMINATION (N.O.T.) FORMS, AS REQUIRED, WITH THE REQUIRED AGENCIES. THE CONTRACTOR SHALL ALSO MODIFY THIS SWPPP AS REQUIRED, AS SITE CONDITIONS CHANGE, THE CONTRACTOR SHALL BE RESPONSIBLE FOR ALL SITE RECORDS AND INSPECTIONS REQUIRED FOR THIS SWPPP. PERFORMANCE OF THESE RESPONSIBILITIES ARE INCIDENTAL TO CONSTRUCTION OF THE PROJECT AND NO SEPARATE PAYMENT WILL BE MADE THEREFOR.

31. FOR STORM DRAIN CONSTRUCTION, RCP JOINTS ~~SHALL~~ SHALL NOT BE GROUTED PRIOR TO FINAL INSPECTION. FINAL INSPECTION WILL DETERMINE JOINTS TO BE GROUTED OR REPAIRED FOR FINAL ACCEPTANCE OF THE CONSTRUCTION.

32. CONTRACTOR SHALL PROVIDE TEMPORARY WATER SERVICE LINES TO PROPERTIES WHEN WATER SERVICE IS INTERRUPTED FOR MORE THAN A FEW HOURS. PROPERTIES SHALL NOT BE LEFT WITHOUT WATER SERVICE OVERNIGHT.

33. PORTIONS OF THE EXISTING WATERLINE PIPE AND SANITARY SEWER LINE PIPE WITHIN THE PROJECT AREA MAY BE ASBESTOS CEMENT (AC) PIPE. WHERE EXISTING AC PIPE IS TO BE REMOVED, THE CONTRACTOR SHALL USE CARE IN REMOVING EXISTING PIPE AND SHALL COMPLY WITH ALL APPLICABLE LAWS, RULES AND REGULATIONS, IN REMOVING AND DISPOSING OF THE ASBESTOS CEMENT PIPE, AC PIPE SHALL NOT BE REUSED.

34. CONTRACTOR SHALL COORDINATE AND INFORM PROPERTY OWNERS PRIOR TO THE REMOVAL OF LANDSCAPING AND/OR OTHER MISCELLANEOUS IMPROVEMENTS THAT MAY BE ENCOUNTERED ALONG THE STREET RIGHT–OF–WAY LINE ABUTTING PRIVATE PROPERTY THAT ARE REQUIRED TO BE REMOVED TO CONSTRUCT THE PROJECT. PAYMENT FOR LANDSCAPING AND OTHER MISCELLANEOUS ITEMS REMOVED BY THE CONTRACTOR ALONG THE RIGHT–OF–WAY AS REQUIRED TO CONSTRUCT THE PROJECT WILL BE INCIDENTAL TO OTHER ITEMS OF WORK. NO DIRECT PAYMENT SHALL BE MADE THEREFORE.

35. MEASUREMENT AND PAYMENT OF CURB AND GUTTER SHALL BE PER LINEAR FOOT AS MEASURED THROUGH CURB INLETS AND DRIVE PADS, AND AROUND ALL CURB RETURNS THAT DO NOT REQUIRE CURB RETURN FILLETS (VALLEY GUTTERS.)

36. MEASUREMENT FOR PAYMENT OF CURB RETURN FILLETS (VALLEY GUTTERS) SHALL BE MADE PER SQUARE YARD OF HORIZONTAL SURFACE AREA. THE OUTSIDE LIMITS OF MEASUREMENTS SHALL BE THE EXTENSION OF THE LIP OF GUTTER LINES TO THEIR POINT OF INTERSECTION OF THE P.C. AND P.T. OF THE CURB RETURN AND THE BACK OF CURB. PAYMENT PER SQUARE YARD OF HORIZONTAL SURFACE AREA SHALL INCLUDE STEEL REINFORCEMENT AND THE STAND UP AND/OR LAY DOWN CURB RETURN ASSOCIATED WITH THE CONCRETE FILLET. NO SEPARATE PAYMENT WILL BE MADE FOR THE CURB ASSOCIATED WITH THE CONCRETE CURB RETURN FILLETS.

37. MEASUREMENT AND PAYMENT FOR TEE MANHOLES SHALL INCLUDE FABRICATION OF THE TEE MANHOLE UP TO 18 INCHES ABOVE THE SOFFIT, PLUS DELIVERY AND INSTALLATION OF THE PRE–FABRICATED TEE MANHOLE. MEASUREMENT FOR PAYMENT OF THE VERTICAL PORTION OF THE TEE MANHOLES MORE THAN 18 INCHES ABOVE THE SOFFIT SHALL BE PER VERTICAL FOOT FOR THE DIAMETER OF THE MANHOLE BARREL AS INDICATED IN THE BID ITEM.

38. MEASUREMENT AND PAYMENT FOR SANITARY SEWER AND STORM DRAIN LINES SHALL BE PER LINEAR FOOT AS MEASURED THROUGH ALL MANHOLES, WYES, BENDS, REDUCERS, JUNCTION BOXES, AND TO THE INSIDE FACE OF INLETS. STORM DRAIN REDUCERS WILL BE INCLUDED IN THE MEASUREMENT OF THE LARGEST PIPE DIAMETER OF THE REDUCER.

39. MEASUREMENT AND PAYMENT FOR TRENCHING, BACKFILLING AND COMPACTION ASSOCIATED WITH ALL SANITARY SEWER AND STORM DRAIN LINES SHALL BE PER LINEAR FOOT AS MEASURED THROUGH ALL MANHOLES, WYES, BENDS, REDUCERS, AND JUNCTION BOXES, AND TO THE INSIDE FACE OF INLETS.

40. MEASUREMENT AND PAYMENT FOR STORM DRAIN INLETS WILL BE MADE PER EACH UP TO AND 5.5 FEET OF DEPTH AS MEASURED FROM THE GRATE ELEVATION TO THE INVERT OF LOWER PIPE CONNECTED TO THE INLET. MEASUREMENT AND PAYMENT FOR THE VERTICAL PORTION OF THE INLET GREATER THAN 5.5 FEET DEEP WILL BE MADE PER VERTICAL FOOT FOR THE TYPE OF INLET AS INDICATED IN THE BID ITEM.

41. NO SEPARATE MEASUREMENT OR PAYMENT WILL BE MADE FOR MISCELLANEOUS SITE PREPARATION, GRADING AND CLEANUP WORK REQUIRED TO COMPLETE THE PROJECT. ALL SUCH WORK SHALL BE CONSIDERED INCIDENTAL TO CONSTRUCTION OF THE PROJECT.

42. NO SEPARATE PAYMENT WILL BE MADE FOR ANY HAULING OR DISPOSAL OF MATERIALS. THE TRANSPORTATION AND/OR DISPOSAL OF MATERIAL SHALL BE CONSIDERED INCIDENTAL TO THE BID ITEM TO WHICH THE WORK PERTAINS.

43. THE CONTRACTOR IS RESPONSIBLE FOR THE REMOVAL AND DISPOSAL OF ALL DEMOLITION DEBRIS. WORK MATERIALS SHALL BE DISPOSED OF IN A CITY APPROVED WASTE AREA, IN ACCORDANCE WITH CITY OF ALBUQUERQUE SPECIFICATIONS, LATEST EDITION, SECURED BY AND AT THE EXPENSE OF THE CONTRACTOR.

44. THE CONTRACTOR SHALL REMOVE AND DISPOSE OF ALL ABANDONED UTILITY LINES WHICH ARE EXPOSED AS A RESULT OF CONSTRUCTION UNLESS OTHERWISE DIRECTED BY THE ENGINEER.

45. THE CONTRACTOR WILL BE REQUIRED TO CONFINE HIS WORK WITHIN THE CONSTRUCTION EASEMENTS AND/OR RIGHT OF WAY TO PRESERVE EXISTING VEGETATION AND PRIVATE PROPERTY. THE CONTRACTOR SHALL PROVIDE COPIES OF AGREEMENTS MADE WITH ADJACENT LANDOWNERS TO THE CITY OF ALBUQUERQUE. OVERNIGHT PARKING OF CONSTRUCTION EQUIPMENT SHALL NOT OBSTRUCT DRIVEWAY OPENINGS.

46. THE CONTRACTOR SHALL HAND DELIVER SPECIAL NOTICES TO EACH RESIDENT OR BUSINESS ADJACENT TO THE CONSTRUCTION AREA AND TO OTHERS WHO MAY BE AFFECTED BY THE CONSTRUCTION ACTIVITIES. NOTICES SHALL PROVIDE INFORMATION WHENEVER ACCESS UTILITY SERVICES OR OTHER SERVICES TO PROPERTIES MAY BE IMPAIRED.

47. THE CONTRACTOR SHALL BE RESPONSIBLE FOR:

- DELIVERY OF SPECIAL NOTICES NOT MORE THAN SEVEN (7) DAYS NOR LESS THAN FOUR (4) DAYS PRIOR TO PHYSICAL CONSTRUCTION THAT WILL AFFECT THE PROPERTY.
- DELIVERY OF CORRECTED NOTICES IF CONSTRUCTION DOES NOT START WITHIN 48 HOURS OF THE DATE GIVEN ON THE NOTICE.
- THE WRITTEN NOTICE SHALL STATE:
    1. CONTRACTORS NAME, ADDRESS, AND LOCAL TELEPHONE NUMBER.
    2. NATURE OF WORK TO BE DONE.
    3. TYPE OF DISRUPTION TO EXPECT.
    4. EXPECTED DURATION OF CONSTRUCTION AND START DATE.
    5. CONTRACTORS LOCAL PHONE NUMBER WHERE EMERGENCY CONDITIONS CAN BE REPORTED DURING NORMAL WORKING HOURS.
    6. CONTRACTORS LOCAL PHONE NUMBER WHERE EMERGENCY CONDITIONS CAN BE REPORTED DURING NON–WORKING HOURS.

48. CONTRACTOR SHALL PROVIDE REASONABLE ACCESS TO PROPERTIES WITHIN THE PROJECT AREA DURING CONSTRUCTION.

49. IT IS THE CONTRACTOR'S RESPONSIBILITY TO KNOW AND COMPLY WITH THE "OCCUPATIONAL SAFETY AND HEALTH ACT OF 1970".

50. THE FIRE DEPARTMENT SHALL BE NOTIFIED 48 HRS. IN ADVANCE BY THE CONTRACTOR WHENEVER A FIRE HYDRANT IS TO BE REMOVED OR IS TO BE OUT OF SERVICE.

51. CONTRACTOR SHALL MAINTAIN A GRAFFITI–FREE WORK SITE. CONTRACTOR SHALL PROMPTLY REMOVE ANY AND ALL GRAFFITI FROM EQUIPMENT, WHETHER PERMANENT OR TEMPORARY.

52. EXISTING PAVEMENT DESIGNATED TO BE REMOVED MAY BE PULVERIZED TO 1 ½" MAXIMUM SIZE AND UTILIZED IN SUBGRADE MATERIAL IN LIEU OF REMOVAL OF THE PAVEMENT AT THE CONTRACTORS OPTION. PULVERIZED MATERIAL SHALL BE MIXED WITH EXISTING SUBGRADE MATERIAL. IN EITHER CASE, REMOVAL OR PULVERIZATION, PAYMENT WILL BE MADE UNDER THE BID ITEM – – EXISTING PAVEMENT, ASPHALT CONCRETE, REMOVE AND DISPOSE, ANY THICKNESS, COMPLETE. MEASUREMENT OF THE EXISTING PAVEMENT SHALL BE MADE AND RECORDED PRIOR TO REMOVAL OR PULVERIZATION.

53. PAVING OF UTILITY TRENCH CUTS SHALL CONFORM WITH CITY OF ALBUQUERQUE STANDARD DRAWING NO. 2465.

54. THE DESIGN "R" VALVE FOR THIS PROJECT IS 53.

Need #

?

55. ALL TEXTURED CONCRETE MEDIAN PAVEMENT ON THIS PROJECT, IF ANY SHALL BE CONSTRUCTED IN ACCORDANCE WITH THE CITY OF ALBUQUERQUE STANDARD SPECIFICATIONS, SECTION 346. THE COLOR IS TO BE "BAJA RED", RUNNING BOND PATTERN.

56. QUANTITIES SHOWN FOR THE VARIOUS UNIT PRICE BID ITEMS ARE FOR THE CONTRACTOR'S INFORMATION ONLY. PAYMENT SHALL BE BASED ON ACTUAL QUANTITIES AS CONSTRUCTED.

57. NOISE SUPPRESSION DEVICES SHALL BE KEPT IN WORKING ORDER ON ALL EQUIPMENT IN ACCORDANCE WITH ALL FEDERAL AND STATE REGULATIONS AND CITY ORDINANCES THROUGHOUT THE COURSE OF CONSTRUCTION.

58. WATERING FOR DUST CONTROL, AS REQUIRED, SHALL BE CONSIDERED INCIDENTAL TO CONSTRUCTION AND NO MEASUREMENT OR PAYMENT SHALL BE MADE THEREFORE. CONSTRUCTION AREAS SHALL BE WATERED OR OTHERWISE KEPT DUST FREE. THE CONTRACTOR SHALL USE WATERING EQUIPMENT FOR DUST POLLUTION ABATEMENT AS DIRECTED BY THE PROJECT MANAGER.

59. THE CONTRACTOR SHALL PROVIDE THE ENGINEER WITH "AS–BUILT" PLANS. THE MAINTENANCE OF THESE PLANS INCLUDE: AN UP TO DATE SET OF AS–BUILT PLANS FOR THE PROJECT. THESE PLANS SHALL BE KEPT CURENT, WITHIN TWO WEEKS, AT ALL TIMES AND SHALL BE SUBJECT TO REVIEW BY THE PROJECT MANAGER THROUGHOUT THE PROJECT AND WILL BE REVIEWED BY THE PROJECT MANAGER FOR COMPLETENESS AT LEAST ONCE EVERY 30 DAYS THE FINAL AS–BUILT PLANS SHALL BE SUBMITTED TO THE PROJECT MANAGER BEFORE FINAL PAYMENT IS MADE.

60. ALL DATA SHOWN HEREIN CONCERNING EXISTING UTILITIES HAS BEEN OBTAINED FROM THE OWNERS OF THE UTILITIES, FROM RECORDS OF THE CITY OF ALBUQUERQUE AND FROM FIELD OBSERVATIONS. THESE MAY OR MAY NOT BE ACCURATE. THE CONTRACTOR IS CAUTIONED THAT HE IS RESPONSIBLE FOR DETERMINING THE EXACT LOCATIONS OF, AND FOR PROVIDING PROTECTION OF, ALL LINES. DURING CONSTRUCTION. UTILITY RELOCATIONS REQUIRED BY THE CONSTRUCTION OF THIS PROJECT ARE TO BE COORDINATED BY THE CONTRACTOR. NO ADDITIONAL COMPENSATION WILL BE ALLOWED FOR DELAYS OR INCONVENIENCE CAUSED BY UTILITY COMPANY WORK CREW. THE CONTRACTOR MAY BE REQUIRED TO RESCHEDULE HIS ACTIVITIES TO ALLOW UTILITY CREWS TO PERFORM THEIR REQUIRED WORK. ANY DAMAGE BY THE CONTRACTOR TO LINES, VALVES, METERS, ETC., WILL BE REPAIRED OR REPLACED BY THE CONTRACTOR AT HIS EXPENSE.

61. THE CONTRACTOR WILL NOTIFY THE FIELD ENGINEER NOT LESS THAN SEVEN (7) DAYS PRIOR TO STARTING WORK, IN ORDER THAT THE FIELD ENGINEER MAY TAKE NECESSARY MEASURES TO INSURE THE PRESERVATION OF SURVEY MONUMENTS. THE CONTRACTOR WILL NOTIFY THE ENGINEER IF A MONUMENT IS DISTURBED. REPLACEMENT WILL BE DONE ONLY THE CITY OF ALBUQUERQUE SURVEY SECTION. (768–3614) WHEN A CHANGE IS MADE IN THE FINISHED ELEVATION OF THE PAVEMENT OF ANY ROADWAY IN WHICH A PERMANENT SURVEY MONUMENT IS LOCATED, CONTRACTOR WILL, AT HIS OWN EXPENSE, HAVE THE CITY SURVEY SECTION ADJUST THE MONUMENT COVER TO THE NEW GRADE UNLESS OTHERWISE SPECIFIED. REFER TO SECTION 4 OF THE SPECIFICATIONS.

62. CONTRACTOR WILL NOT PAVE OVER ANY SURFACE FEATURE, I.E., GAS VALVE, MANHOLE COVER, ETC. WITHOUT PRIOR APPROVAL FROM THE CITY FIELD ENGINEER.

63. CONTRACTORS YARD, AND ANY OTHER AREAS DISTURBED BY THE CONTRACTOR NOT INCLUDED ON THE PLANS, SHALL BE TREATED WITH CLASS "A" SEEDING. THIS WORK SHALL BE CONSIDERED INCIDENTAL TO THE PROJECT AND NO MEASUREMENT OR PAYMENT WILL BE MADE THEREFORE.

64. THE CONTRACTOR AGREES TO TAKE NECESSARY SAFETY PRECAUTIONS AS REQUIRED BY FEDERAL, STATE AND LOCAL AUTHORITIES TO PROTECT PEDESTRIAN AND VEHICULAR TRAFFIC IN THE CONSTRUCTION AREA, WHICH INCLUDE BUT ARE NOT LIMITED TO: MAINTAINING ADEQUATE WARNING SIGNS, BARRICADES, LIGHTS, GUARD FENCES, WALKS AND BRIDGES.

65. THE FIREHOUSE ON 47th STREET HAS SPECIAL ACCESS REQUIREMENTS. REFER TO SHEETS 19 & 20.

66. THERE SHALL BE NO CONSTRUCTION ON CENTRAL AVENUE (PHASE II THROUGH PHASE V) FROM OCT. 2nd TO OCT. 12th (ABQ. BALLOON FIESTA PERIOD)

67. DURING CONSTRUCTION, CONTRACTOR SHALL COORDINATE BUS SCHEDULES ON CENTRAL AVE. WITH SUNTRAN.

68. EXISTING PAVEMENT STRIPING & MARKINGS DISTURBED BY CONSTRUCTION SHALL BE REPLACED BY THE CONTRACTOR. THIS WORK SHALL BE CONSIDERED INCIDENTAL AND NO DIRECT PAYMENT SHALL BE MADE THERFORE.

69. PLAN SHEETS 14 THROUGH 20 SHOW SUGGESTED OR RECOMMENDED WAYS FOR CONTROLLING TRAFFIC DURING CONSTRUCTION. CONTRACTOR SHALL CONTACT JOE LUEHRING FOR COORDINATION OF ANY ALTERNATE TRAFFIC CONTROL PLANS.

## LEGEND

| | |
|---|---|
| NEW STORM DRAIN LINE | ═ |
| NEW STORM DRAIN MANHOLE | ◎ |
| NEW STORM DRAIN TEE MH | ▣ |
| NEW STORM DRAIN INLET | ▭ |
| NEW STORM DRAIN BEND | ⬠ |
| NEW SAS LINE | ═ |
| EXISTING STORM DRAIN LINE | — SD — |
| EXISTING STORM DRAIN MANHOLE | ◎ |
| EXISTING STORM DRAIN JUNCTION BOX MANHOLE | ▢ |
| EXISTING STORM DRAIN INLET | ▭ |
| EXISTING GAS LINE | — GAS — |
| EXISTING CABLE TV LINE | |
| EXISTING COMM LINE, FIBER OPTIC | |
| EXISTING SAS LINE | — SAS — |
| EXISTING WATER LINE | — W — |
| EXISTING OVERHEAD ELECTRIC | |
| EXISTING TELEPHONE SERVICE | |
| EXISTING SAS MANHOLE | ○ |
| EXISTING GUY POLE | GUY |
| EXISTING GAS VALVE | ⊗ |
| EXISTING GAS METER | GM |
| EXISTING WATER VALVE | ⋈ |
| EXISTING WATER METER | WM |
| EXISTING FIRE HYDRANT | FH |
| EXISTING UTILITY POLE | UP |
| EXISTING LIGHT POLE | LP |
| EXISTING TELE MANHOLE | TMH |
| EXISTING US WEST BOX | USW ▭ |
| EXISTING SIGN | SIGN |
| EXISTING BOLLARD | BOL |
| EXISTING BUILDING | |
| EXISTING CURB & GUTTER | |
| PAVEMENT REMOVAL LIMITS | |
| EXISTING SIDEWALK | |
| EXISTING EASEMENT | |
| EXISTING CONTOUR MAJOR | 4950 |
| EXISTING CONTOUR MINOR | |
| EXISTING IRON FENCE | |
| EXISTING BLOCK WALL | |
| EXISTING FENCE | |
| EXISTING GATE | |
| EXISTING TREE | |
| SURVEY CONTROL POINT | CP9 |
| POTHOLE LOCATION–UTILITIES | PH # |
| BORE HOLE LOCATION–SOIL SAMPLES | BH # |
| HYDRAULIC GRADE LINE | – ·· – ·· – |

**LARKIN GROUP** NM, INC
CONSULTING ENGINEERS AND SURVEYORS
8500 MENAUL BLVD. NE A–440
(505) 275–7500

CITY OF ALBUQUERQUE
PUBLIC WORKS DEPARTMENT
ENGINEERING DIVISION

TITLE: CENTRAL – ATRISCO DRAINAGE IMPROVEMENTS
ALBUQUERQUE, NM
LOCATION MAP & GENERAL NOTES

| Design Review Committee | City Engineer Approval | Last Design Update | Mo./Day/Yr. | Mo./Day/Yr. |
|---|---|---|---|---|
| | | | | |

City Project No. 674902
Zone Map No. K–12–Z
Sheet 2 Of 21

### REVISIONS

| NO. | DATE | REMARKS | BY |
|---|---|---|---|
| 1 | | | |
| 2 | | | |
| 3 | | | |
| 4 | | | |

DESIGN
DESIGNED BY: R.L. DATE: JUL. 2003
DRAWN BY: P.R. DATE: JUL. 2003
CHECKED BY: J.A.A. DATE: JUL. 2003

### ENGINEER'S SEAL

RICHARD LOVATO 6823

### SURVEY INFORMATION

FIELD NOTES

| NO. | BY | DATE |
|---|---|---|
| 1 | | |
| 2 | | |
| 3 | | |
| 4 | | |
| 5 | | |
| 6 | | |
| 7 | | |

### BENCH MARKS

ALBUQUERQUE CONTROL SURVEY B.M. NO. 17–J12
LOCATED 2.3 MILES WEST OF DOWNTOWN ALBUQUERQUE
SOUTHWEST SIDE OF ATRISCO RD.
THE STATION IS AN ACS 3 1/4" ALUM. CAP RIVETTED TO A
PIPE 0.25 ABOVE GROUND AND IS STAMPED "17–J12, 1989".
PLANE COORDINATES: X=367999.51, Y=1489049.30, EL= 4955.128

### AS BUILT INFORMATION

| | |
|---|---|
| CONTRACTOR | |
| WORK STAKED BY | DATE |
| INSPECTOR'S ACCEPTANCE BY | DATE |
| FIELD VERIFICATION BY | DATE |
| DRAWINGS CORRECTED BY | DATE |

### MICRO–FILM INFORMATION

| | |
|---|---|
| RECORDED BY | DATE |
| RECORDED BY | DATE |
| RECORDED BY | DATE |

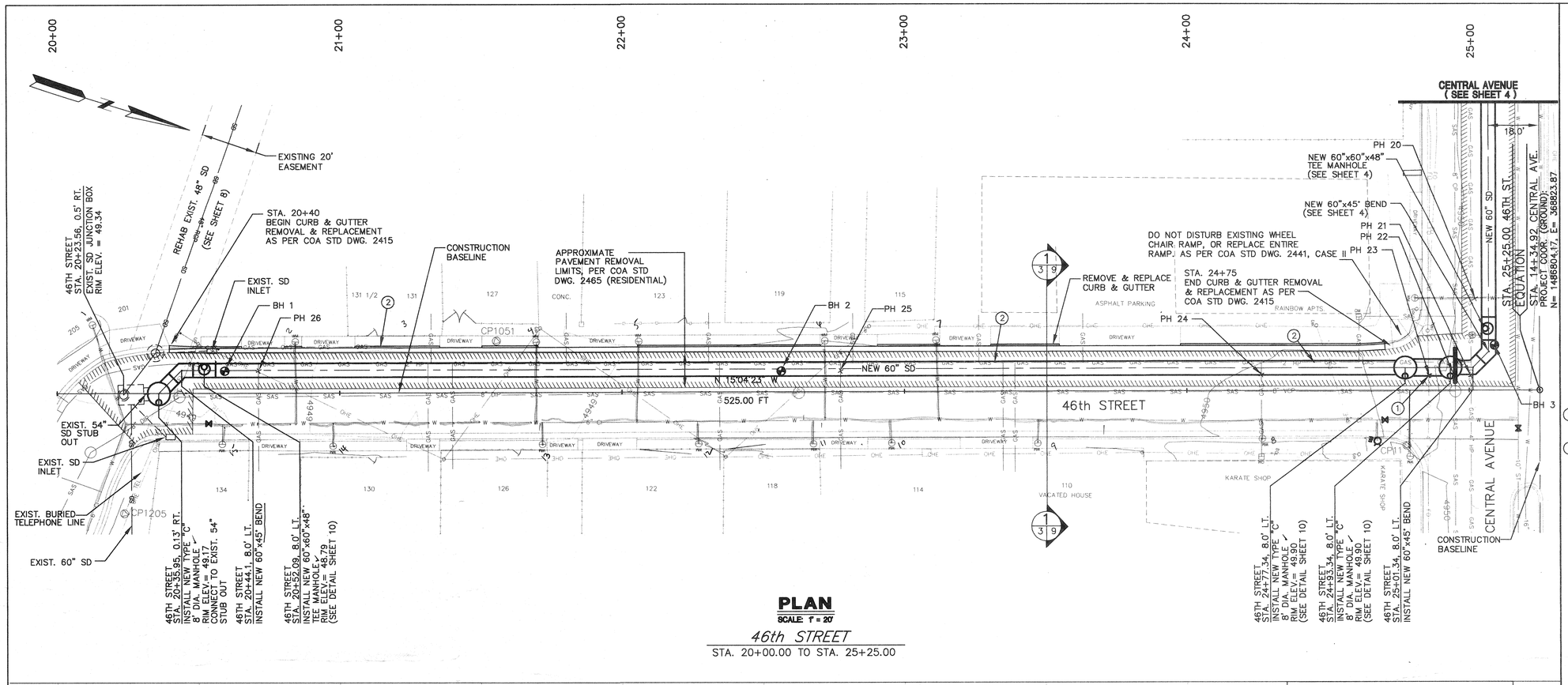


## PLAN

SCALE: 1" = 20'

*46th STREET*

STA. 20+00.00 TO STA. 25+25.00

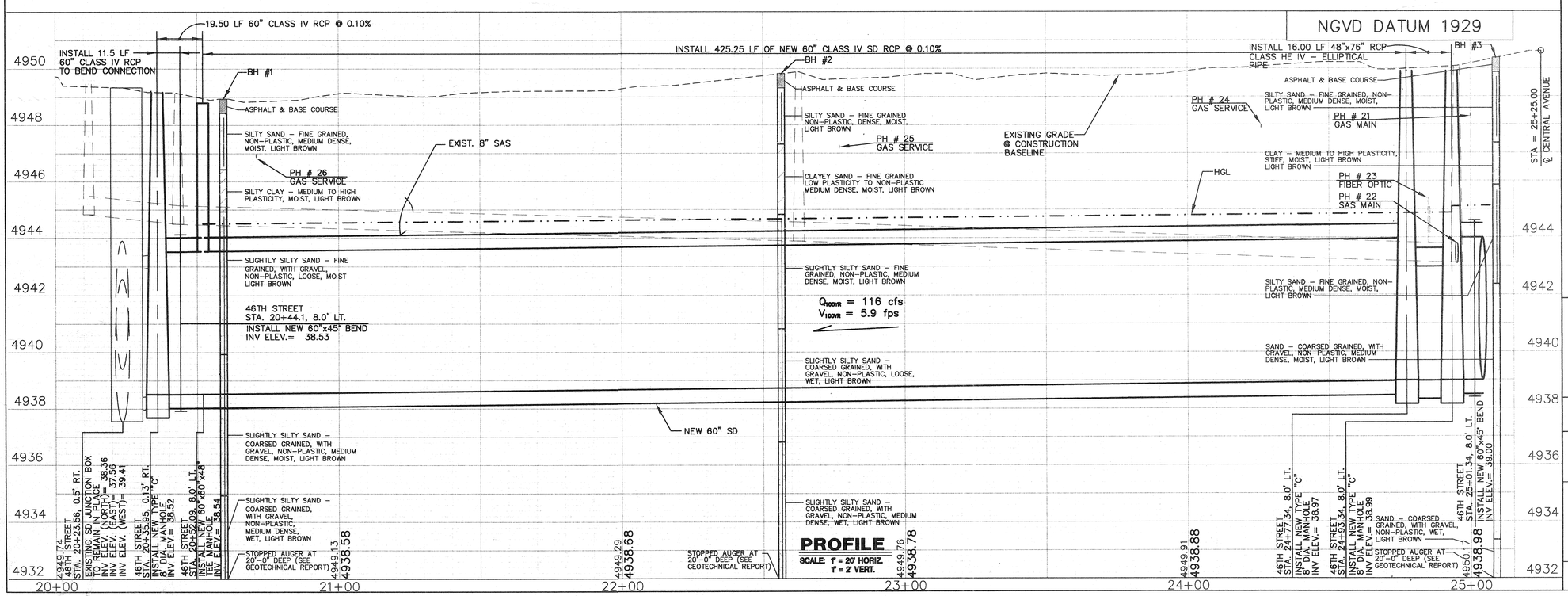


## PROFILE

SCALE: 1" = 20' HORIZ.
1" = 2' VERT.

## POTHOLE INFORMATION

| POTHOLE # (PH) | GROUND ELEVATION | PIPE ELEV. INFORMATION |
|---|---|---|
| 21 | 50.18 | 48.43 |
| 22 | 50.06 | 43.64 |
| 23 | 49.81 | 45.31<br>43.81 |
| 24 | 50.21 | 48.0 |
| 25 | 49.85 | 47.35 |
| 26 | 49.15 | 46.98 |

## KEYED NOTES

1. Contractor to verify existing fiber optic locations, elevations & clearances prior to installation of storm drain
2. Existing gas main to be relocated by PNM Gas Co. Contractor shall coordinate with PNM Gas Co. during construction of storm drain.

## NOTE

Any water service lines that need to be replaced shall be replaced with copper tubing and no splices from meter to main. As per C.O.A. Std Dwg. 2362

Any existing utilities exposed during construction shall be supported and protected during construction. This support and protection shall be considered incidental to project construction and no separate payment will be made.

PH # = Pot hole location for existing utilities


LARKIN GROUP, P.A., INC.
CONSULTING ENGINEERS AND SURVEYORS
8500 MENAUL BLVD. NE A-440
(505) 275-7500


| NO. | DATE | REMARKS | BY |
|---|---|---|---|
| 1 | | REVISIONS | |
| 2 | | | |
| 3 | | | |
| 4 | | | |

DESIGN

DESIGNED BY: R.L. DATE: JUL. 2003
DRAWN BY: A.B./P.R. DATE: JUL. 2003
CHECKED BY: J.A.A. DATE: JUL. 2003

CITY OF ALBUQUERQUE
PUBLIC WORKS DEPARTMENT
ENGINEERING DIVISION

TITLE: CENTRAL – ATRISCO DRAINAGE IMPROVEMENTS
46th STREET
PLAN & PROFILE STA. 20+00 TO 25+25.00

| Design Review Committee | City Engineer Approval | Last Design Update | Mo./Day/Yr. | Mo./Day/Yr. |
|---|---|---|---|---|
| | | | | |

| City Project No. | Zone Map No. | Sheet | Of |
|---|---|---|---|
| 674902 | K–12–Z | 3 | 21 |

AS BUILT INFORMATION

| | | |
|---|---|---|
| CONTRACTOR | | |
| WORK STAKED BY | | DATE |
| INSPECTOR'S ACCEPTANCE BY | | DATE |
| FIELD VERIFICATION BY | | DATE |
| DRAWINGS CORRECTED BY | | DATE |

MICRO-FILM INFORMATION

RECORDED BY DATE
RECORDED BY DATE
RECORDED BY DATE

BENCH MARKS

ALBUQUERQUE CONTROL SURVEY B.M. NO. 17–J12
LOCATED 2.3 MILES WEST OF DOWNTOWN ALBUQUERQUE SOUTHWEST SIDE OF ATRISCO RD.
THE STATION IS AN ACS 3 1/4" ALUM. CAP RIVETTED TO A PIPE 0.25 FT. ABOVE GROUND AND IS STAMPED "17–J12 1989".
PLANE COORDINATES: X=367999.51, Y=1489049.30, EL= 4955.128

SURVEY INFORMATION

FIELD NOTES

| NO. | BY | DATE |
|---|---|---|
| | | |

ENGINEER'S SEAL

RICHARD LOVATO NEW MEXICO 6823 REGISTERED PROFESSIONAL ENGINEER

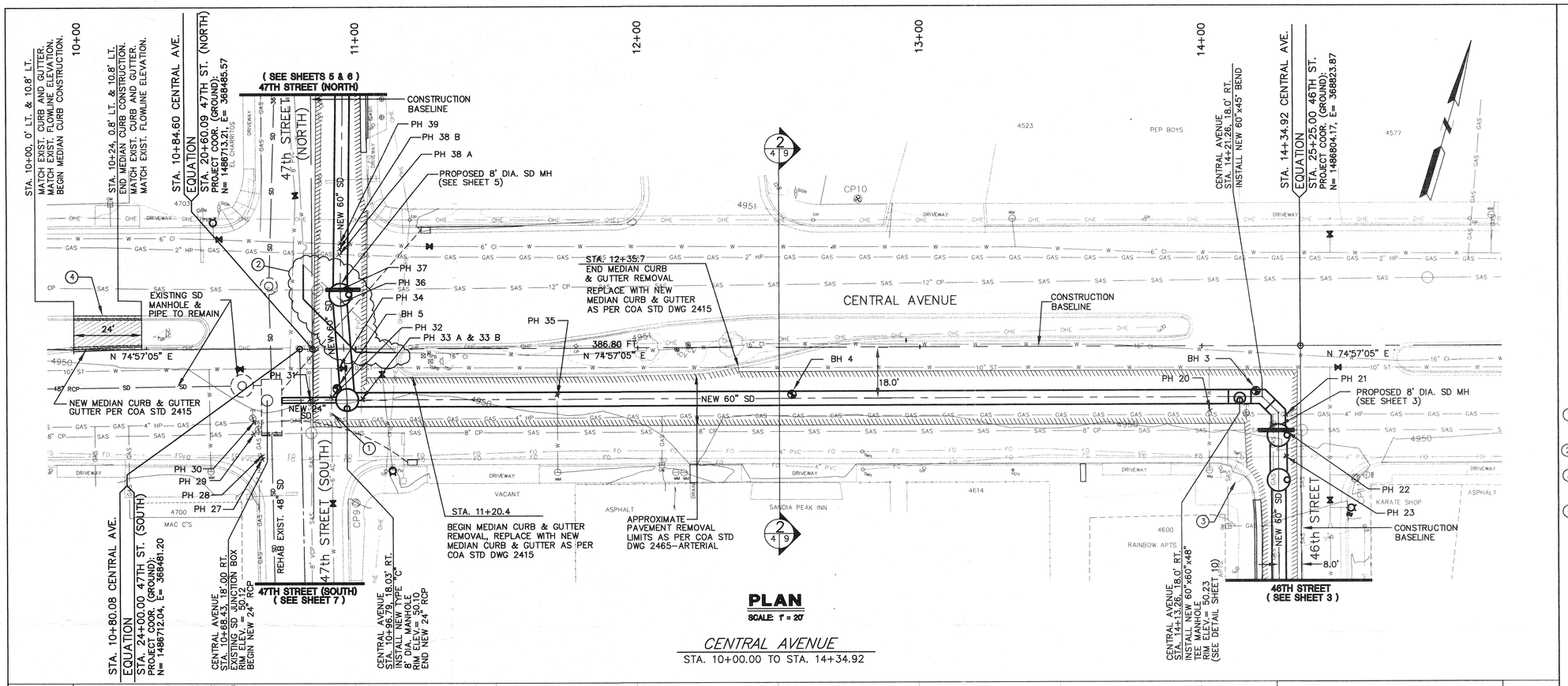


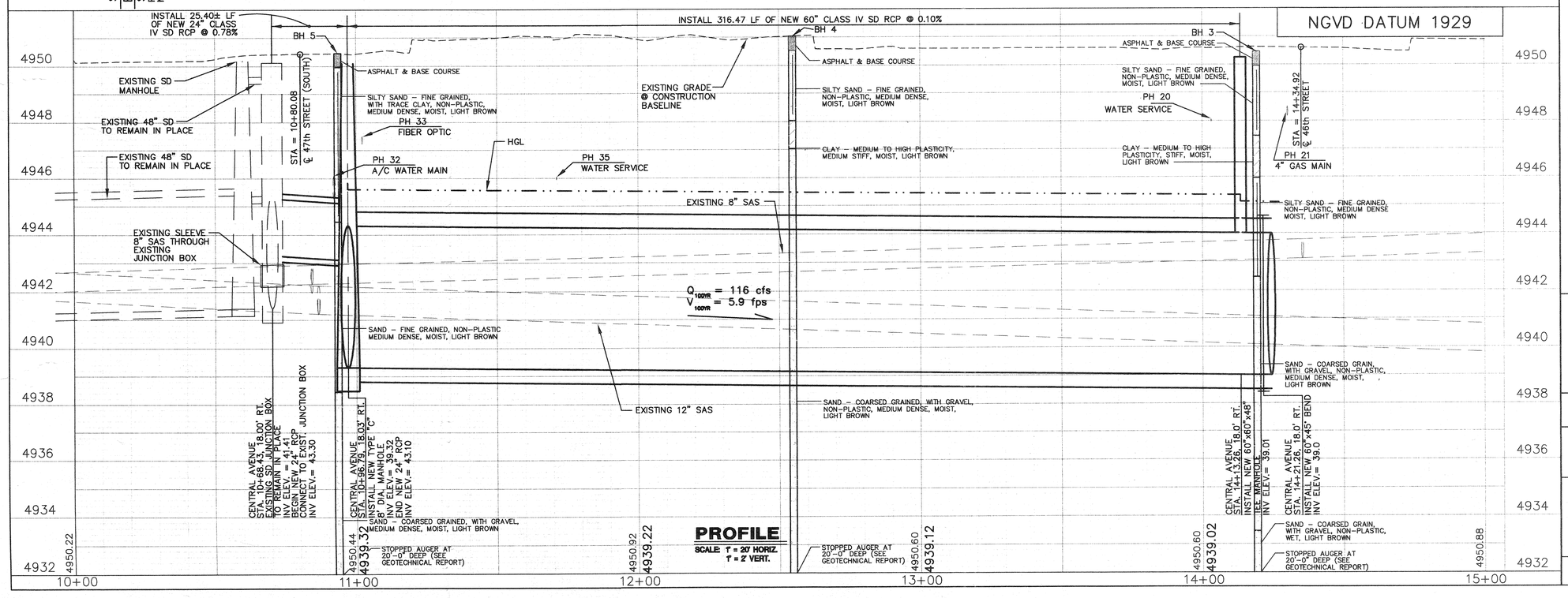


## POTHOLE INFORMATION

| POTHOLE # (PH) | GROUND ELEVATION | PIPE ELEV. INFORMATION |
|---|---|---|
| 20 | 50.30 | 48.13 |
| 21 | 50.18 | 48.43 |
| 22 | 50.06 | 43.64 |
| 23 | 49.81 | 45.31<br>43.81 |
| 31 | 50.11 | 42.78 |
| 32 | 50.17 | 46.09 |
| 33 | 50.15 | 47.07 TOP<br>46.73 BOTTOM |

## KEYED NOTES

1. Shut down and protect existing water line during construction in this area. See sheet 21 for Water Shut-off Plan.
2. See sheet 5 for water line construction this area.
3. Existing wheelchair ramp is to remain. If the wheelchair ramp is disturbed by construction, it shall be replaced in its entirety.
4. Remove median curb for temporary access purposes and install temporary pavement within median during Construction Phase V see temporary pavement section sheet 9. Following Construction Phase V, build new median curb per COA Std. Dwg. 2415. Match existing flowline grade for curb.

## NOTE

Any water service lines that need to be replaced shall be replaced with copper tubing and no splices from meter to main. As per C.O.A. Std Dwg. 2362

Any existing utilities exposed during construction shall be supported and protected during construction. This shall be considered incidental to project construction and no separate payment will be made.

PH # = Pot hole location for existing utilities

AS BUILT INFORMATION

CONTRACTOR
WORK STAKED BY — DATE
INSPECTOR'S ACCEPTANCE BY — DATE
FIELD VERIFICATION BY — DATE
DRAWINGS CORRECTED BY — DATE
RECORDED BY — DATE
RECORDED BY — DATE
RECORDED BY — DATE

BENCH MARKS

ALBUQUERQUE CONTROL SURVEY B.M. NO. 17-J12
LOCATED 2.3 MILES WEST OF DOWNTOWN ALBUQUERQUE SOUTHWEST SIDE OF ATRISCO RD.
THE STATION IS AN ACS 3 1/4" ALUM. CAP RIVETTED TO A PIPE 0.25 FT. ABOVE GROUND AND IS STAMPED "17-J12, 1989".
PLANE COORDINATES: X=367999.51, Y=1489049.30, EL= 4955.128

MICRO-FILM INFORMATION

SURVEY INFORMATION

FIELD NOTES

| NO. | BY | DATE |
|---|---|---|
| 1 | | |
| 2 | | |
| 3 | | |
| 4 | | |
| 5 | | |
| 6 | | |
| 7 | | |

ENGINEER'S SEAL

RICHARD J. LOVATO NEW MEXICO 6823 REGISTERED PROFESSIONAL ENGINEER

| NO. | DATE | REMARKS | BY |
|---|---|---|---|
| 1 | | REVISIONS | |
| 2 | | | |
| 3 | | | |
| 4 | | | |

DESIGN

DESIGNED BY: R.L. — DATE: JUL. 2003
DRAWN BY: A.B./P.R. — DATE: JUL. 2003
CHECKED BY: J.A.A. — DATE: JUL. 2003

LARKIN GROUP, P.A., INC.
CONSULTING ENGINEERS AND SURVEYORS
8500 MENAUL BLVD. NE A-440
(505) 275-7500

CITY OF ALBUQUERQUE
PUBLIC WORKS DEPARTMENT
ENGINEERING DIVISION

TITLE: CENTRAL - ATRISCO DRAINAGE IMPROVEMENTS
CENTRAL AVENUE
PLAN & PROFILE STA 10+00 TO 14+34.92

| Design Review Committee | City Engineer Approval | Last Design Update | Mo./Day/Yr. | Mo./Day/Yr. |
|---|---|---|---|---|
| | | | | |

| City Project No. | Zone Map No. | Sheet | Of |
|---|---|---|---|
| 674902 | K-12-Z | 4 | 21 |

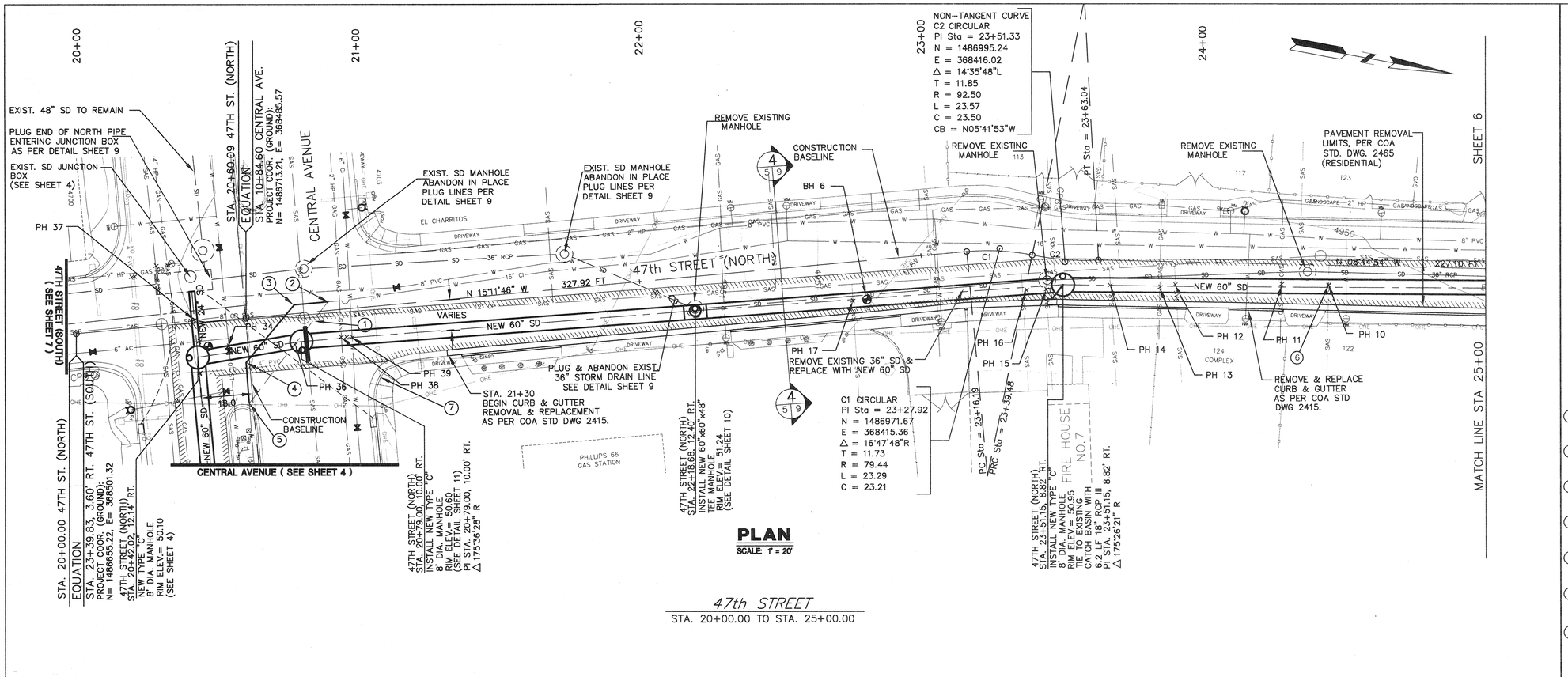


**PLAN**
SCALE: 1" = 20'

*47th STREET*
STA. 20+00.00 TO STA. 25+00.00

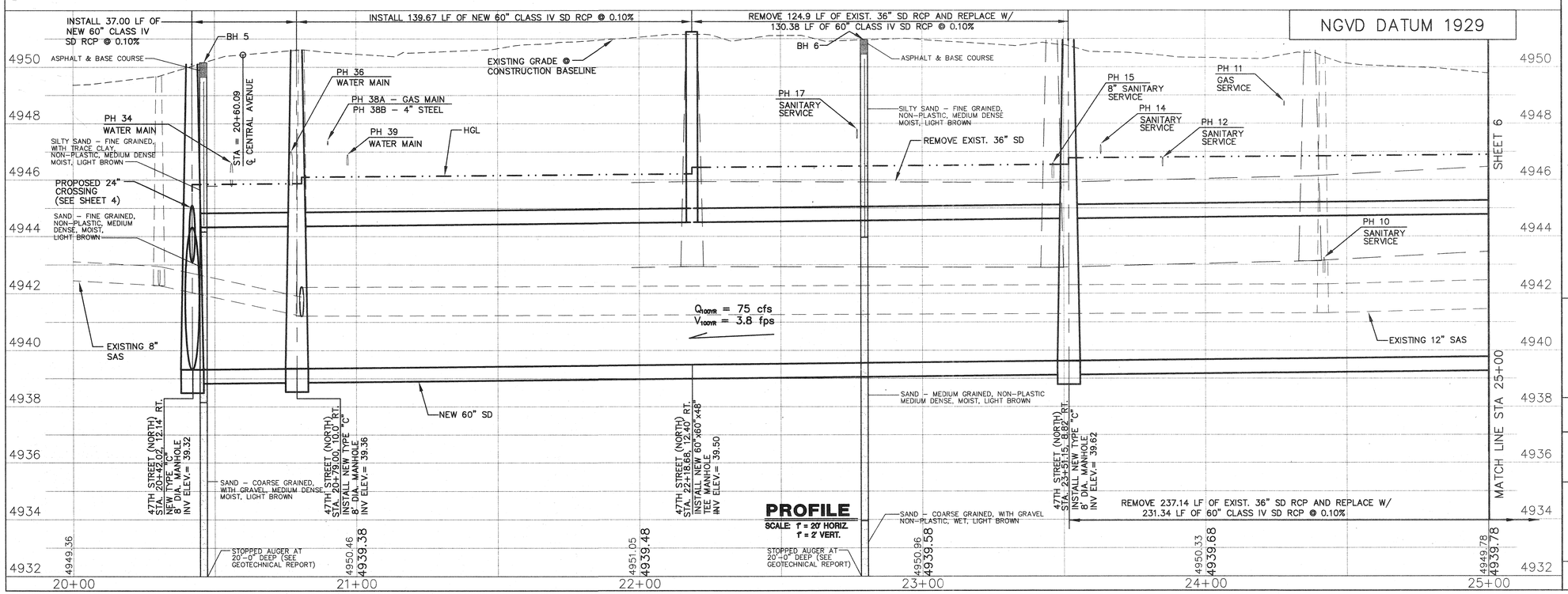


**PROFILE**
SCALE: 1" = 20' HORIZ.
1" = 2' VERT.

## POTHOLE INFORMATION

| POTHOLE # (PH) | GROUND ELEVATION | PIPE ELEV. INFORMATION |
|---|---|---|
| 10 | 50.55 | 43.22 |
| 11 | 50.62 | 48.79 |
| 12 | 50.72 | 46.80 |
| 13 | NOTHING FOUND * | |
| 14 | 50.78 | 47.11 |
| 15 | 50.81 | 45.31 |
| 16 | NOTHING FOUND * | |
| 17 | 50.04 | 47.71 |
| 34 | 50.41 | 46.58 |
| 36 | 50.67 | 46.59 |
| 37 | NOTHING FOUND * | |
| 38 A/B | 50.59 | 47.42 |
| 39 | 50.52 | 46.94 |

* NOTE: See Log

## KEYED NOTES

1. Remove approx. 45 L.F. existing 16" C.I. water main. See sheet 21 for Water Sut-off Plan.
2. Sta. 20+93.32, 3.09' Lt. Remove existing fitting, install 16" dresser sleeve and 12' 16" pipe with restraints.
3. Sta. 20+77.37, 3.09' Lt. Install 1-45° 16" Bend, and 26.5 L.F. pipe with restraints.
4. Sta. 20+58.68, 15.5' Rt. Install 1-45° bend and 1.4 L.F. pipe with restraints.
5. Sta. 20+58.68, 29.53' Rt. Remove existing fitting and install existing water line with restraints.
6. Contractor to excavate, identify and determine option for routing SAS service over top of new storm drain.
7. Wheelchair ramp to remain. If wheelchair ramp is disturbed by construction, it shall be removed in its entirety and replaced per COA STD. DWG. 2441.

## NOTE

Any water service lines that need to be replaced shall be replaced with copper tubing and no splices from meter to main. As per C.O.A. Std Dwg. 2362

Any existing utilities exposed during construction shall be supported and protected during construction. This shall be considered incidental to project construction and no separate payment will be made.

PH # = Pot hole location for existing utilities


LARKIN GROUP, N.M., INC.
CONSULTING ENGINEERS AND SURVEYORS
8500 MENAUL BLVD. NE A-440
(505) 275-7500


| NO. | DATE | REMARKS | BY |
|---|---|---|---|
| 1 | | | |
| 2 | | | |
| 3 | | | |
| 4 | | | |

REVISIONS

DESIGN
DESIGNED BY: R.L. DATE: JUL. 2003
DRAWN BY: A.B./P.R. DATE: JUL. 2003
CHECKED BY: J.A.A. DATE: JUL. 2003

AS BUILT INFORMATION
CONTRACTOR
WORK STAKED BY DATE
INSPECTOR'S ACCEPTANCE BY DATE
FIELD VERIFICATION BY DATE
DRAWINGS CORRECTED BY DATE
MICRO-FILM INFORMATION
RECORDED BY DATE
RECORDED BY DATE
RECORDED BY DATE

BENCH MARKS
ALBUQUERQUE CONTROL SURVEY B.M. NO. 17-J12
LOCATED 2.3 MILES WEST OF DOWNTOWN ALBUQUERQUE SOUTHWEST SIDE OF ATRISCO RD.
THE STATION IS AN ACS 3 1/4" ALUM. CAP RIVETTED TO A PIPE 0.25 FT. ABOVE GROUND AND IS STAMPED "17-J12. 1989".
PLANE COORDINATES: X=367999.51, Y=1489049.30, EL= 4955.128

SURVEY INFORMATION
FIELD NOTES
NO. BY DATE

ENGINEER'S SEAL
RICHARD L. LOVATO NEW MEXICO 6823 REGISTERED PROFESSIONAL ENGINEER

CITY OF ALBUQUERQUE
PUBLIC WORKS DEPARTMENT
ENGINEERING DIVISION

TITLE: CENTRAL – ATRISCO DRAINAGE IMPROVEMENTS
47th STREET (NORTH)
PLAN & PROFILE STA 20+00 TO 25+00

Design Review Committee | City Engineer Approval | Last Design Update | Mo./Day/Yr. | Mo./Day/Yr.

City Project No. 674902 | Zone Map No. K-12-Z | Sheet 5 Of 21

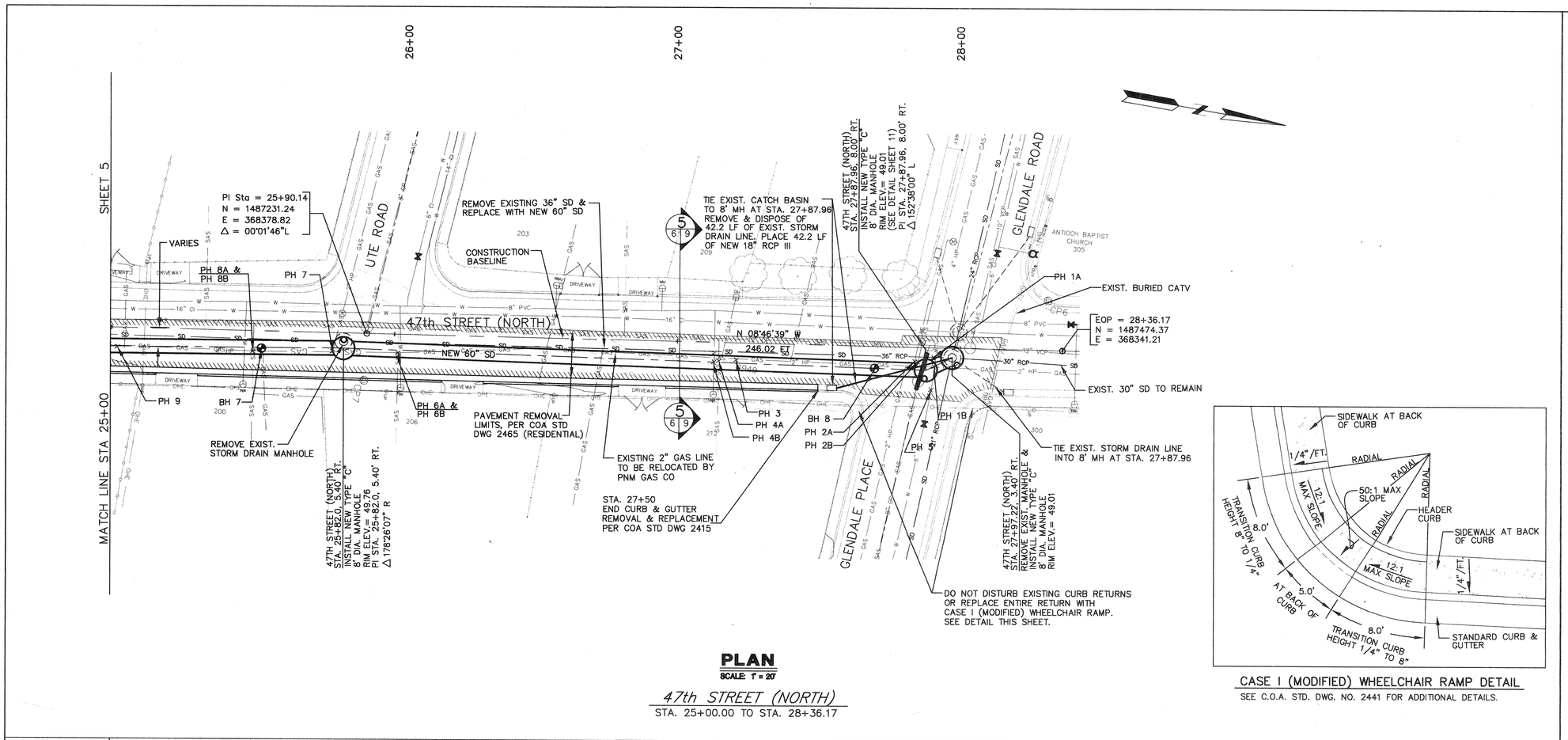


## PLAN

SCALE: 1" = 20'

*47th STREET (NORTH)*

STA. 25+00.00 TO STA. 28+36.17




CASE I (MODIFIED) WHEELCHAIR RAMP DETAIL

SEE C.O.A. STD. DWG. NO. 2441 FOR ADDITIONAL DETAILS.

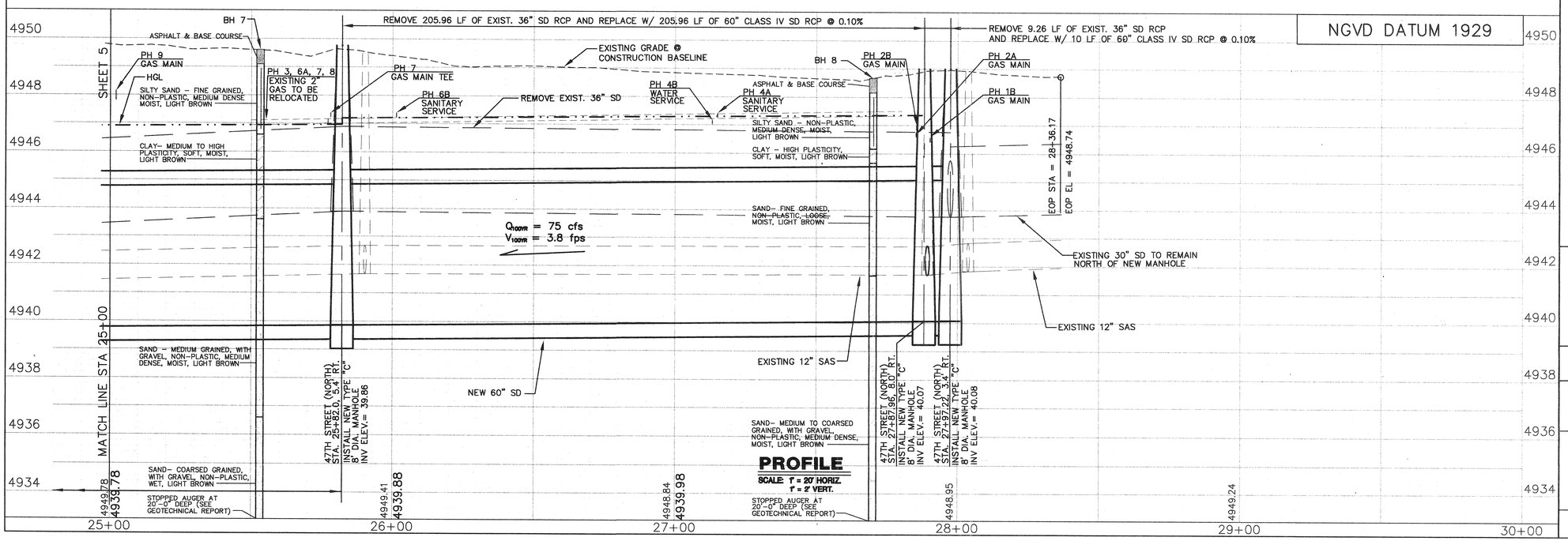


## PROFILE

SCALE: 1" = 20' HORIZ.
1" = 2' VERT.

## POTHOLE INFORMATION

| POTHOLE # (PH) | | GROUND ELEVATION | PIPE ELEV. INFORMATION |
|---|---|---|---|
| 1 | A | 49.00 | 46.83 |
| | B | | 46.58 |
| 2 | A | 49.00 | 47.00 |
| | B | | 46.75 |
| 3 | | 49.16 | 47.74 |
| 4 | A | 49.17 | 47.42 |
| | B | | 47.17 |
| 5 | | 49.98 | 45.81 |
| 6 | A | 49.64 | 47.39 |
| | B | | 47.14 |
| 7 | | 49.80 | 47.38 |
| 8 | A | 49.96 | 47.54 |
| | B | | 47.13 |
| 9 | | 50.22 | 48.14 |

## NOTE

Any water service lines that need to be replaced shall be replaced with copper tubing and no splices from meter to main. As per C.O.A. Std Dwg. 2362

Any existing utilities exposed during construction shall be supported and protected during construction. This shall be considered incidental to project construction and no separate payment will be made.

PH # = Pot hole location for existing utilities

Existing curb and gutter at the Glendale/47th St. intersection is to remain undisturbed.


LARKIN GROUP, INC.
CONSULTING ENGINEERS AND SURVEYORS
8500 MENAUL BLVD. NE A-440
(505) 275-7500


AS BUILT INFORMATION

CONTRACTOR | DATE
STAKED BY | DATE
INSPECTOR'S ACCEPTANCE BY | DATE
FIELD VERIFICATION BY | DATE
DRAWINGS CORRECTED BY | DATE

MICRO-FILM INFORMATION

RECORDED BY | DATE
RECORDED BY | DATE
RECORDED BY | DATE

BENCH MARKS

ALBUQUERQUE CONTROL SURVEY B.M. NO. 17-J12
LOCATED 2.3 MILES WEST OF DOWNTOWN ALBUQUERQUE
SOUTHWEST SIDE OF ATRISCO RD.
THE STATION IS AN ACS 3 1/4" ALUM. CAP RIVETTED TO A PIPE 0.25 FT. ABOVE GROUND AND IS STAMPED "17-J12, 1989".
PLANE COORDINATES: X=367999.51, Y=1489049.30, EL= 4955.128

SURVEY INFORMATION
FIELD NOTES

| NO. | BY | DATE |
|---|---|---|
| 1 | | |
| 2 | | |
| 3 | | |

ENGINEER'S SEAL

RICHARD J. LOVATO, NEW MEXICO, 6823, REGISTERED PROFESSIONAL ENGINEER

| NO. | DATE | REMARKS | BY |
|---|---|---|---|
| 1 | | | |
| 2 | | | |
| 3 | | | |
| 4 | | | |

REVISIONS

DESIGN
DESIGNED BY: R.L. DATE: JUL. 2003
DRAWN BY: A.B./P.R. DATE: JUL. 2003
CHECKED BY: J.A.A. DATE: JUL. 2003

CITY OF ALBUQUERQUE
PUBLIC WORKS DEPARTMENT
ENGINEERING DIVISION

TITLE: CENTRAL – ATRISCO DRAINAGE IMPROVEMENTS
47th STREET (NORTH)
PLAN & PROFILE STA 25+00 TO 28+36.17

| Design Review Committee | City Engineer Approval | Last Design Update | Mo./Day/Yr. | Mo./Day/Yr. |
|---|---|---|---|---|
| | | | | |

| City Project No. | Zone Map No. | Sheet | Of |
|---|---|---|---|
| 674902 | K-12-Z | 6 | 21 |

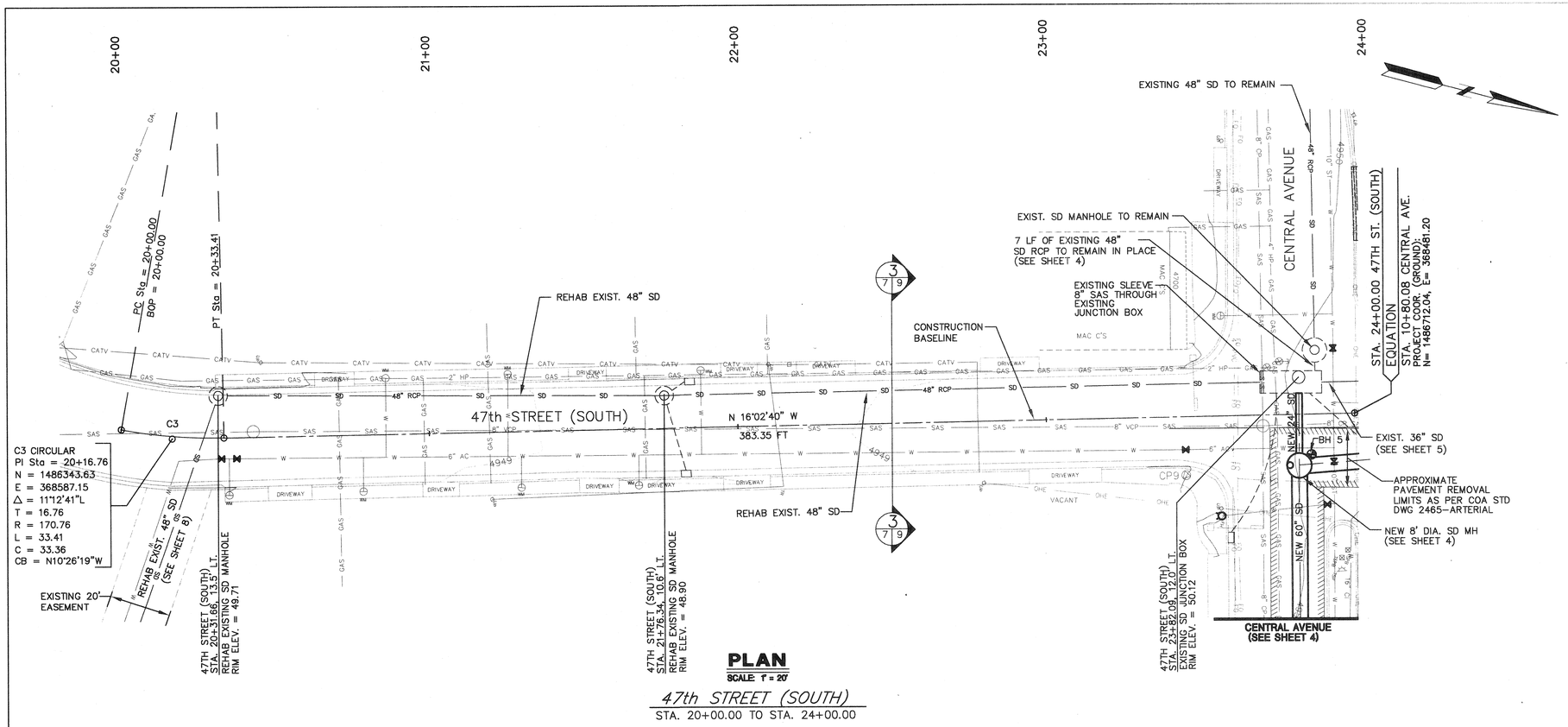


**PLAN**
SCALE: 1" = 20'

*47th STREET (SOUTH)*
STA. 20+00.00 TO STA. 24+00.00

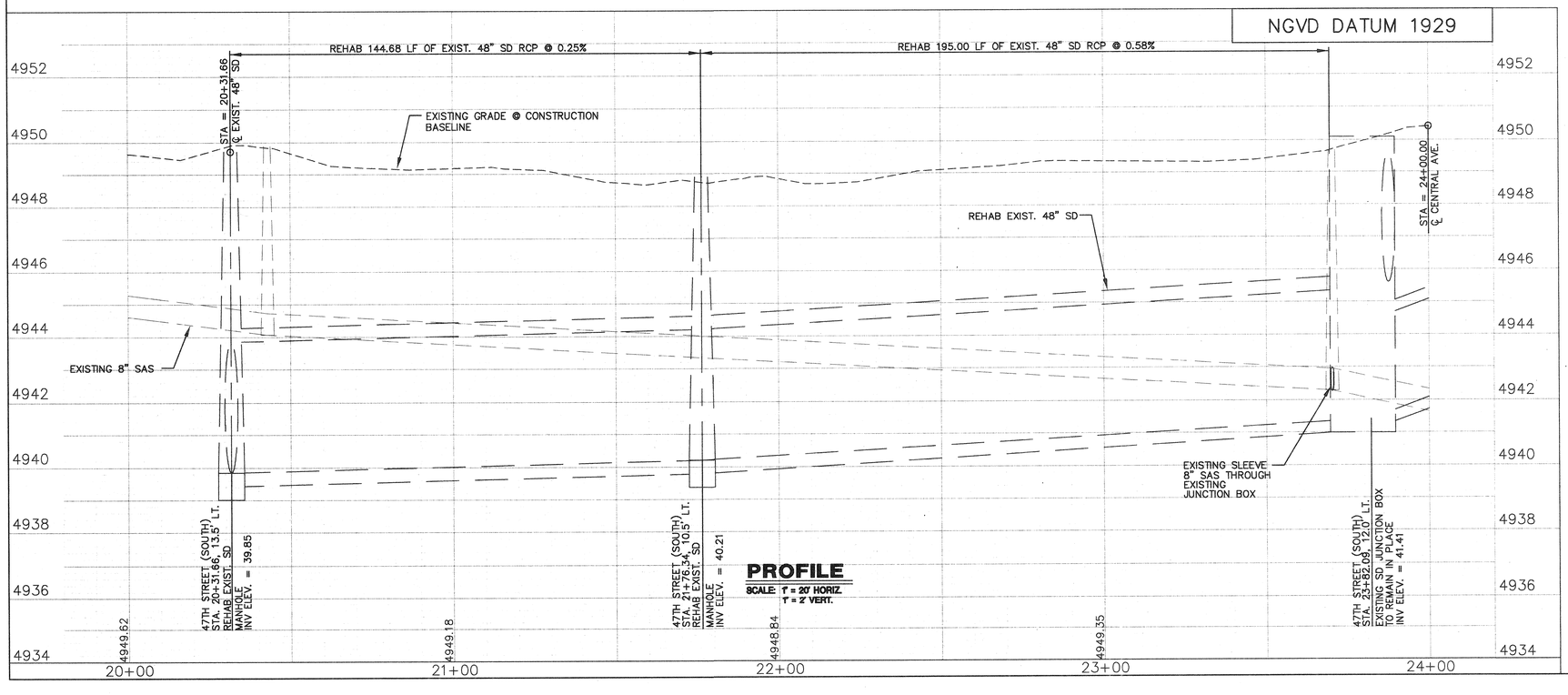


**PROFILE**
SCALE: 1" = 20' HORIZ.
1" = 2' VERT.

## NOTE

Any water service lines that need to be replaced shall be replaced with copper tubing and no splices from meter to main. As per C.O.A. Std Dwg. 2362

Any existing utilities exposed during construction shall be supported and protected during construction. This shall be considered incidental to project construction and no separate payment will be made.

PH # = Pot hole location for existing utilities

LARKIN GROUP, P.A., INC.
CONSULTING ENGINEERS AND SURVEYORS
8500 MENAUL BLVD. NE A-440
(505) 275-7500

| NO. | DATE | REVISIONS | BY |
|---|---|---|---|
| 4 | | | |
| 3 | | | |
| 2 | | | |
| 1 | | REMARKS | |
| | | DESIGN | |

DESIGNED BY: R.L. DATE: JUL. 2003
DRAWN BY: A.B./P.R. DATE: JUL. 2003
CHECKED BY: J.A.A. DATE: JUL. 2003

ENGINEER'S SEAL
RICHARD LOVATO NEW MEXICO 6823 REGISTERED PROFESSIONAL ENGINEER

AS BUILT INFORMATION

| | |
|---|---|
| CONTRACTOR | |
| WORK STAKED BY | DATE |
| INSPECTOR'S ACCEPTANCE BY | DATE |
| FIELD VERIFICATION BY | DATE |
| DRAWINGS CORRECTED BY | DATE |
| MICRO-FILM INFORMATION | |
| RECORDED BY | DATE |
| RECORDED BY | DATE |
| RECORDED BY | DATE |

BENCH MARKS

ALBUQUERQUE CONTROL SURVEY B.M. NO. 17-J12
LOCATED 2.3 MILES WEST OF DOWNTOWN ALBUQUERQUE SOUTHWEST SIDE OF ATRISCO RD.
THE STATION IS AN A/CS 3 1/4" ALUM. CAP RIVETTED TO A PIPE 0.25 FT. ABOVE GROUND AND IS STAMPED "17-J12, 1989".
PLANE COORDINATES: X=367999.51, Y=1489049.30, EL= 4955.128

SURVEY INFORMATION

FIELD NOTES

| NO. | BY | DATE |
|---|---|---|
| 1 | | |
| 2 | | |
| 3 | | |
| 4 | | |
| 5 | | |
| 6 | | |
| 7 | | |

CITY OF ALBUQUERQUE
PUBLIC WORKS DEPARTMENT
ENGINEERING DIVISION

TITLE: CENTRAL – ATRISCO DRAINAGE IMPROVEMENTS
47th STREET (SOUTH)
PLAN & PROFILE STA 20+00 TO 24+00

| Design Review Committee | City Engineer Approval | Last Design Update | Mo./Day/Yr. | Mo./Day/Yr. |
|---|---|---|---|---|
| | | | | |

| City Project No. | Zone Map No. | Sheet | Of |
|---|---|---|---|
| 674902 | K-12-Z | 7 | 21 |

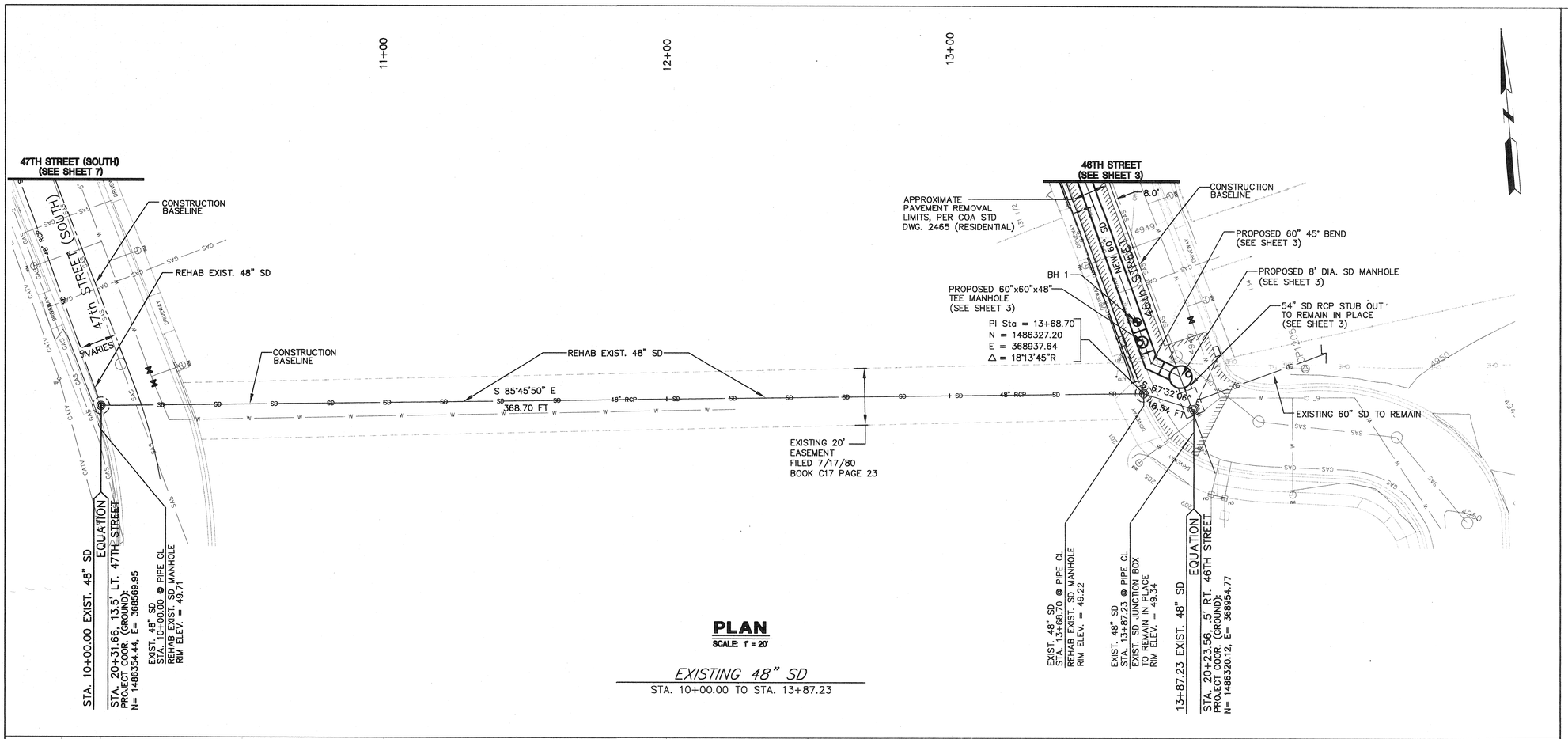


## PLAN

SCALE: 1" = 20'

*EXISTING 48" SD*

STA. 10+00.00 TO STA. 13+87.23

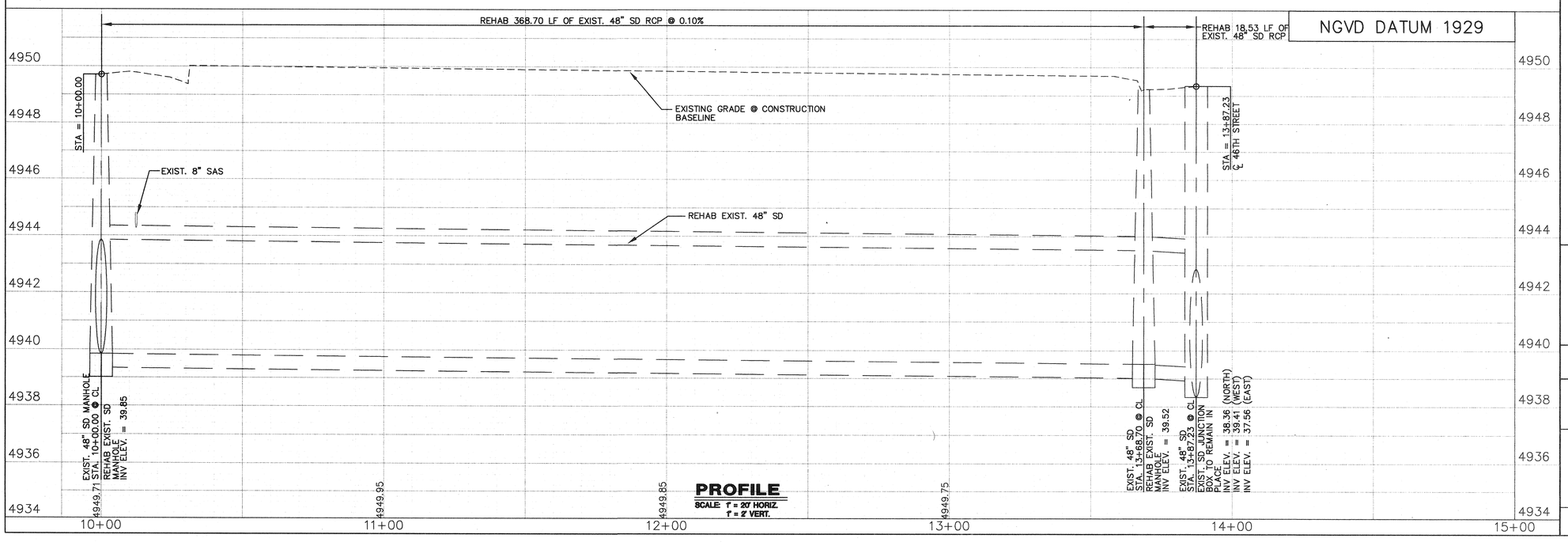


## PROFILE

SCALE: 1" = 20' HORIZ.
1" = 2' VERT.

### NOTE

Any water service lines that need to be replaced shall be replaced with copper tubing and no splices from meter to main. As per C.O.A. Std Dwg. 2362

Any existing utilities exposed during construction shall be supported and protected during construction. This shall be considered incidental to project construction and no separate payment will be made.

PH # = Pot hole location for existing utilities

**LARKIN GROUP, P.A., INC.**
CONSULTING ENGINEERS AND SURVEYORS
8500 MENAUL BLVD. NE A-440
(505) 275-7500

| NO. | DATE | REVISIONS | BY |
|---|---|---|---|
| 1 | | | |
| 2 | | | |
| 3 | | | |
| 4 | | | |

REMARKS

DESIGN

DESIGNED BY: R.L. DATE: JUL. 2003
DRAWN BY: A.B./P.R. DATE: JUL. 2003
CHECKED BY: J.A.A. DATE: JUL. 2003

ENGINEER'S SEAL

RICHARD LOVATO
NEW MEXICO
8823
REGISTERED PROFESSIONAL ENGINEER

### SURVEY INFORMATION

FIELD NOTES

| NO. | BY | DATE |
|---|---|---|
| 1 | | |
| 2 | | |
| 3 | | |
| 4 | | |
| 5 | | |
| 6 | | |
| 7 | | |

### AS BUILT INFORMATION

| | |
|---|---|
| CONTRACTOR | |
| WORK STAKED BY | DATE |
| INSPECTOR'S ACCEPTANCE BY | DATE |
| FIELD INFORMATION BY | DATE |
| DRAWINGS CORRECTED BY | DATE |
| MICRO-FILM INFORMATION | |
| RECORDED BY | DATE |
| RECORDED BY | DATE |
| RECORDED BY | DATE |

### BENCH MARKS

ALBUQUERQUE CONTROL SURVEY B.M. NO. 17-J12
LOCATED 2.3 MILES WEST OF DOWNTOWN ALBUQUERQUE SOUTHWEST SIDE OF ATRISCO RD.
THE STATION IS AN ACS 3 1/4" ALUM. CAP RIVETTED TO A PIPE 0.25 FT. ABOVE GROUND AND IS STAMPED "17-J12, 1989".
PLANE COORDINATES: X=367999.51, Y=1489049.30, EL= 4955.128

TITLE: CITY OF ALBUQUERQUE
PUBLIC WORKS DEPARTMENT
ENGINEERING DIVISION

# CENTRAL – ATRISCO DRAINAGE IMPROVEMENTS
## 48" SD IN EASEMENT
PLAN & PROFILE STA 10+00 TO 13+87

| Design Review Committee | City Engineer Approval | Last Design Update | Mo./Day/Yr. | Mo./Day/Yr. |
|---|---|---|---|---|
| | | | | |

| City Project No. | Zone Map No. | Sheet | Of |
|---|---|---|---|
| 674902 | K-12-Z | 8 | 21 |

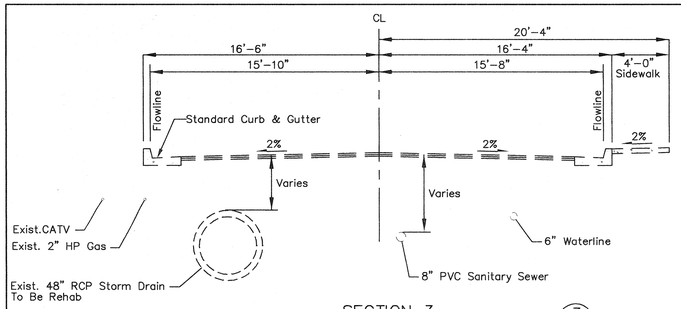


SECTION 3 (3/7|9)

47TH STREET (SOUTH) @ STA. 22+50
SOUTH OF WEST CENTRAL AVE.

SCALE: 1"=5' NOTE: DIMENSIONS ARE APPROXIMATE.

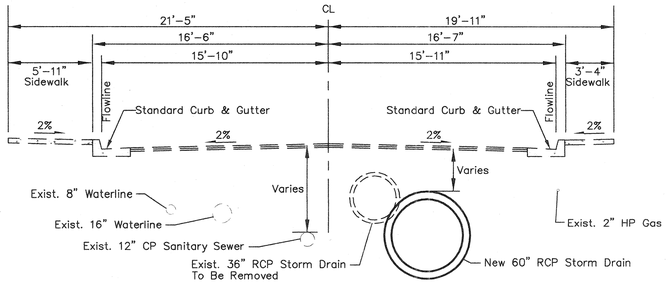


SECTION 5 (5/6|9)

47TH STREET (NORTH) @ STA. 27+00
NORTH OF WEST CENTRAL AVE.

SCALE: 1"=5' NOTE: DIMENSIONS ARE APPROXIMATE.

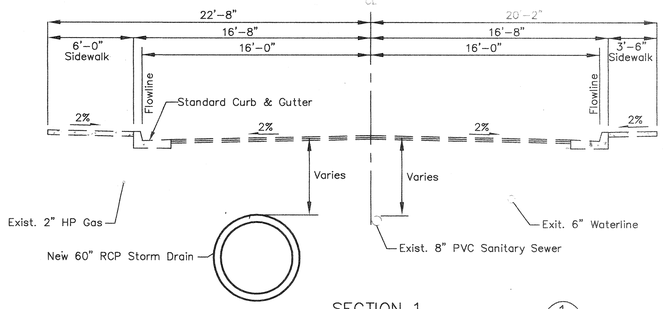


SECTION 1 (1/3|9)

46TH STREET @ STA. 23+50
SOUTH OF WEST CENTRAL AVE.

SCALE: 1"=5' NOTE: DIMENSIONS ARE APPROXIMATE.

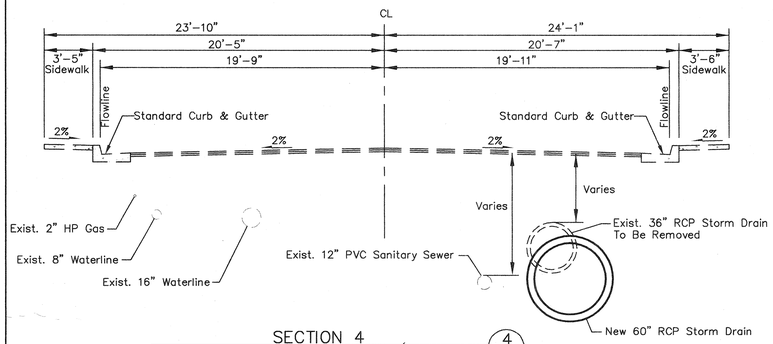


SECTION 4 (4/5|9)

47TH STREET (NORTH) @ STA. 22+50
NORTH OF WEST CENTRAL AVE.

SCALE: 1"=5' NOTE: DIMENSIONS ARE APPROXIMATE.

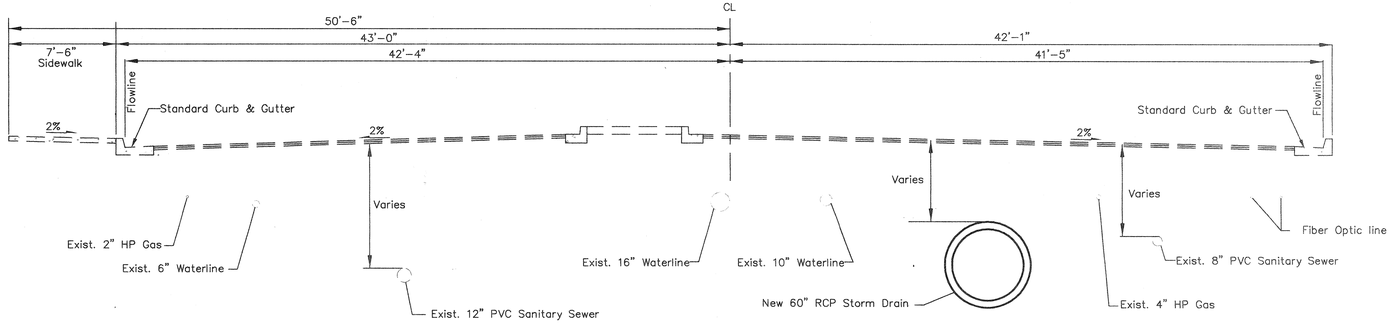


SECTION 2 (2/4|9)

CENTRAL AVENUE @ STA. 13+50

SCALE: 1"=5' NOTE: DIMENSIONS ARE APPROXIMATE.

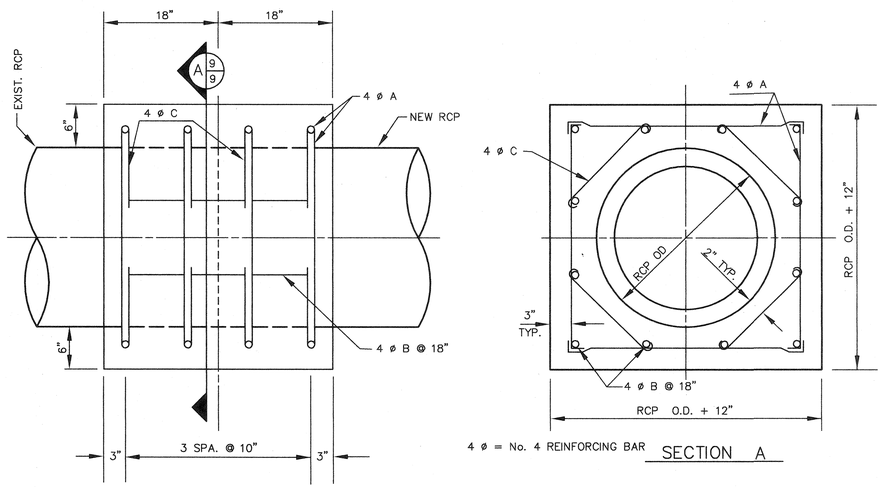


4 ø = No. 4 REINFORCING BAR

SECTION A

| INSIDE DIA. | OUTSIDE DIA. | RCP O.D. + 12" | 4 ø A (NO. & LENGTH) | 4 ø B (NO. & LENGTH) | 4 ø C (NO. & LENGTH) | REIN. BARS | CLASS "A" CONC. |
|---|---|---|---|---|---|---|---|
| 18" | 23" | 2.9167' | 16 @ 2'-6" | 8 @ 2'-9" | — — — — — — — | 41 LB.. | 0.69 CU. YD. |
| 24" | 30" | 3.5000' | 16 @ 3'-3" | 12 @ 2'-9" | — — — — — — — | 57 LB.. | 0.91 CU. YD. |
| 30" | 37" | 4.0833' | 16 @ 3'-9" | 12 @ 2'-9" | — — — — — — — | 62 LB.. | 1.17 CU. YD. |
| 36" | 44" | 4.6667' | 16 @ 4'-3" | 12 @ 2'-9" | — — — — — — — | 67 LB.. | 1.44 CU. YD. |
| 48" | 58" | 5.6333' | 16 @ 5'-6" | 16 @ 2'-9" | 16 @ 2'-9" | 118 LB.. | 2.06 CU. YD. |
| 60" | 72" | 6.4167' | 16 @ 6'-0" | 20 @ 2'-9" | 16 @ 3'-3" | 144 LB.. | 2.78 CU. YD. |

COLLAR DETAILS FOR CONNECTING EXISTING CONC. PIPE CULV. W/ NEW CONC. PIPE CULV.

NOT TO SCALE

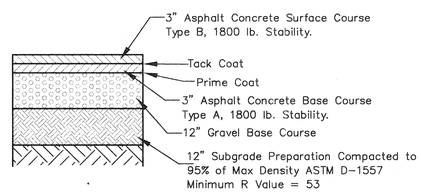


ARTERIAL PAVEMENT SECTION (6")

CENTRAL AVENUE SCALE: 1/2"=1'

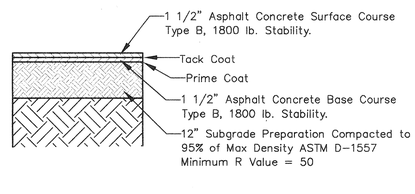


RESIDENTIAL PAVEMENT SECTION (3")

46th & 47th STREETS SCALE: 1/2"=1'

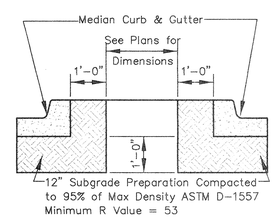


TYPICAL MEDIAN CURB & GUTTER

CENTRAL (MEDIAN)

SCALE: 1/2"=1'

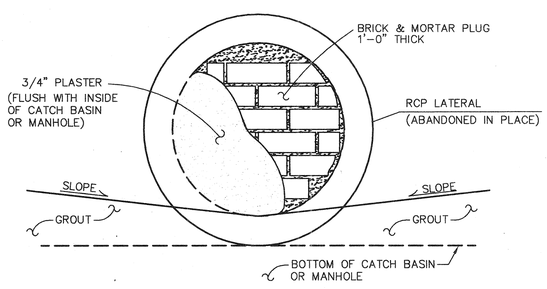


BRICK & MORTAR PLUG

VIEW FROM INSIDE CATCH BASIN OR MANHOLE

NOT TO SCALE

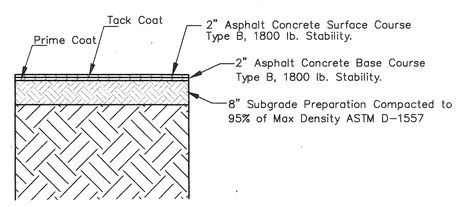


TEMPORARY PAVEMENT SECTION

CENTRAL (MEDIAN)

SCALE: 1/2"=1'

AS BUILT INFORMATION

| | | |
|---|---|---|
| CONTRACTOR | | DATE |
| WORK STAKED BY | | DATE |
| INSPECTOR'S ACCEPTANCE BY | | DATE |
| FIELD VERIFICATION BY | | DATE |
| DRAWINGS CORRECTED BY | | DATE |

MICRO-FILM INFORMATION

| | |
|---|---|
| RECORDED BY | DATE |
| RECORDED BY | DATE |
| RECORDED BY | DATE |

BENCH MARKS

ALBUQUERQUE CONTROL SURVEY B.M. NO. 17-J12
LOCATED 2.3 MILES WEST OF DOWNTOWN ALBUQUERQUE
SOUTHWEST SIDE OF ATRISCO RD.
THE STATION IS AN ACS 3 1/4" ALUM. CAP RIVETTED TO A
PIPE 0.25 FT. ABOVE GROUND AND IS STAMPED "17-J12, 1989".
PLANE COORDINATES: X=367999.51, Y=1489049.30, EL= 4955.128

SURVEY INFORMATION

FIELD NOTES

| NO. | BY | DATE |
|---|---|---|
| 1 | | |
| 2 | | |
| 3 | | |
| 4 | | |
| 5 | | |
| 6 | | |
| 7 | | |

ENGINEER'S SEAL

RICHARD J. TOMAYO NEW MEXICO 6823 REGISTERED PROFESSIONAL ENGINEER

| NO. | DATE | REVISIONS REMARKS | BY |
|---|---|---|---|
| 4 | | | |
| 3 | | | |
| 2 | | | |
| 1 | | | |

DESIGN

DESIGNED BY: R.L. DATE: JUL. 2003
DRAWN BY: P.R. DATE: JUL. 2003
CHECKED BY: J.A.A DATE: JUL. 2003

LARKIN GROUP, INC.
CONSULTING ENGINEERS AND SURVEYORS
8500 MENAUL BLVD. NE A-440
(505) 275-7500

CITY OF ALBUQUERQUE
PUBLIC WORKS DEPARTMENT
ENGINEERING DIVISION

TITLE: CENTRAL – ATRISCO DRAINAGE IMPROVEMENTS
46th ST., 47th ST., & CENTRAL AVE.
TYPICAL STREET SECTIONS

| Design Review Committee | City Engineer Approval | Last Design Update | Mo./Day/Yr. | Mo./Day/Yr. |
|---|---|---|---|---|
| | | | | |

| City Project No. | Zone Map No. | Sheet | Of |
|---|---|---|---|
| 674902 | K-12-Z | 9 | 21 |

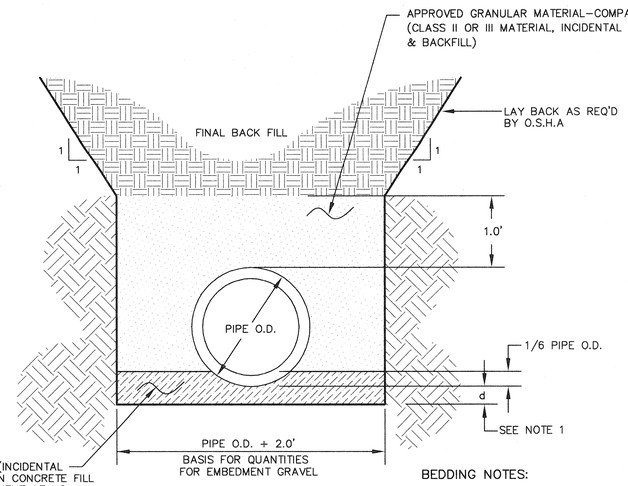


BEDDING NOTES:

1. MINIMUM "d" SHALL BE 3" FOR 27" AND SMALLER RCP, 4" FOR 30" TO 60" RCP AND 6" FOR 66" AND LARGER RCP.
2. ALL STORM DRAIN RCP PIPE TO BE CLASS IV INSTALLED WITH CLASS "C" BEDDING.

## CLASS "C" BEDDING

SCALE: NOT TO SCALE

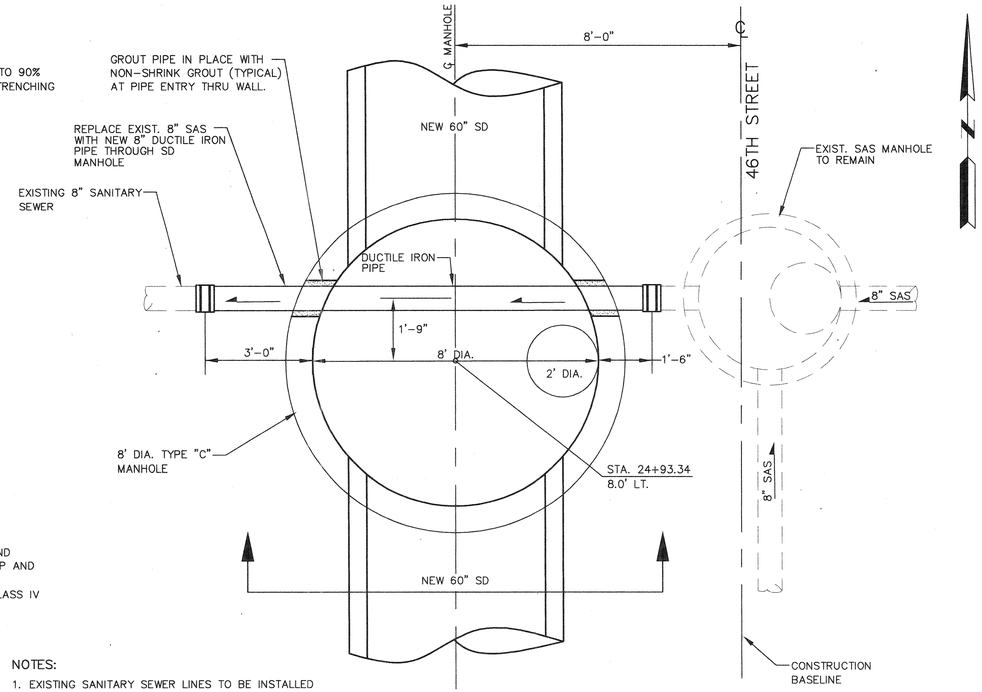


## PLAN

SCALE: 1/2"= 1'

NOTES:

1. EXISTING SANITARY SEWER LINES TO BE INSTALLED THROUGH NEW 8' DIA. MANHOLE WITH DUCTILE IRON PIPE OF EQUIVALENT INSIDE DIAMETER.
2. NO JOINTS WILL BE ALLOWED IN MANHOLE.
3. CONNECT NEW DUCTILE IRON PIPE TO EXISTING WITH ELASTOMERIC ADAPTOR COUPLING WITH STAINLESS STEEL BANDS.
4. BYPASS PUMPING OR TEMPORARY PLUGGING OF LINE FOR INSTALLATION WILL BE INCLUDED IN PRICE BID FOR DUCTILE IRON PIPE THROUGH MANHOLE.
5. PAYMENT FOR THIS WORK WILL BE MADE UNDER BID ITEM "DUCTILE IRON PIPE THROUGH MANHOLE" AND SHALL INCLUDE FURNISHING AND INSTALLING ALL SANITARY SEWER PIPE MATERIAL REQUIRED.

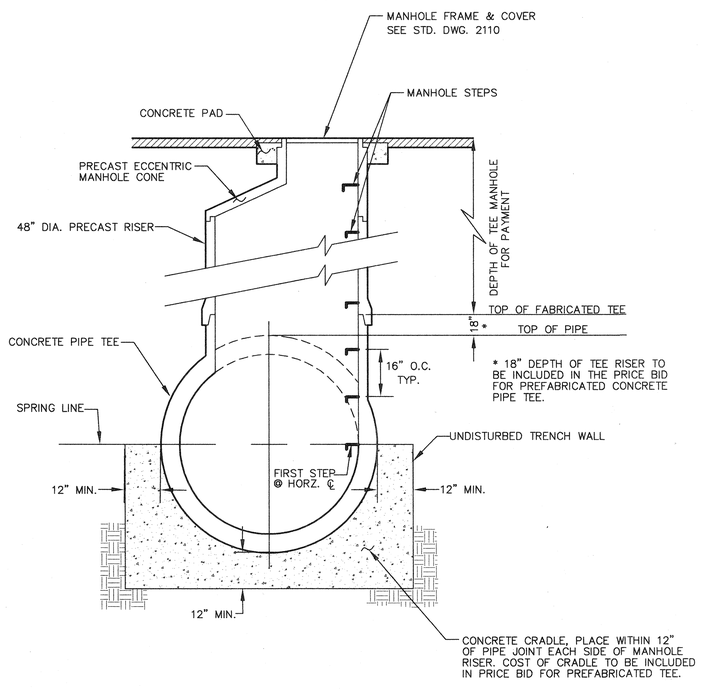


## 4' DIA. TEE MANHOLE DETAIL (TYPICAL)

SCALE: 1/2"= 1'

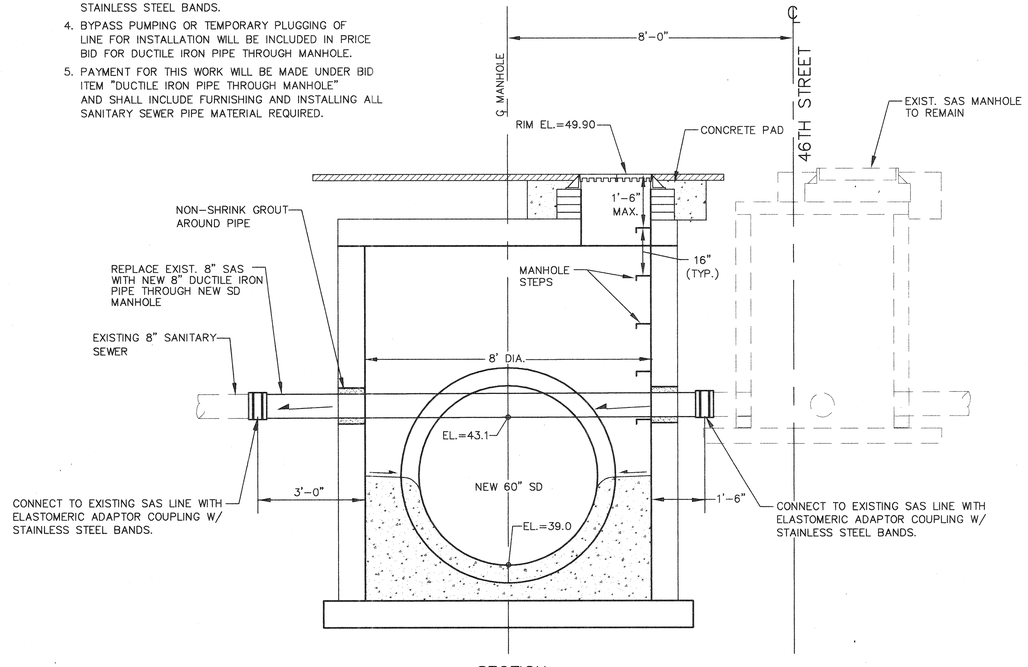


## SECTION

## TYPE "C" MANHOLE
## 8' DIA. STORM DRAIN MANHOLE DETAIL
## 46TH STREET STA. 24+93.34, 8.0' LT.

SCALE: 1/2"= 1'

## MANHOLE GENERAL NOTES

1. All manholes shall be built of precast concrete and be of Eccentric Cone type unless otherwise specified.
2. Manhole frames and lids in streets shall be machined.
3. Top of manhole frame shall be set flush and on same slope as finished surface or as directed by the Engineer.
4. Manholes are located on plan sheets by station & distance to center of manhole barrel. Except T Manholes which will be defined by station and offset to CL of pipe.
5. Reinforcement in all sections shall equal or exceed A.S.T.M. C–478 specifications.
6. Mastic material to be used at all manhole section joints. O–rings may be used for joints below the cone section, but the cone section itself shall not have O–ring joints.
7. Approved gasket or concrete mortar to be used around pipe in knock–outs and penetrations.
8. Clearance Tolerance of Pipe Openings: The Maximum Allowable Pipe Opening on a Horizontal Axis Shall be the Outside Diameter of the Pipe Plus 12".The Maximum Allowable Pipe Opening on a Vertical Axis Shall be the Outside Diameter Plus 8". The Minimum Clearance Between the Outside Surface of an Installed Pipe and the Concrete of the Manhole Shall be 2".
9. Installation of Pipe Openings: All Required Pipe Openings Shall be Plant Cast in Manhole Units. Field Alterations of Openings will be Permitted Provided Walls are Scored With a Masonry Saw to a Depth Sufficient to Sever Reinforcing Steel. A Chipping Hammer May Then be Used to Remove the Concrete. Minimum Distance Between Any Two Adjacent Pipes Shall be 4".
10. No direct payment for shaping floor or connecting pipes as shown on plans, unless otherwise specified.

## NOTE

Any water service lines that need to be replaced shall be replaced with copper tubing and no splices from meter to main. As per C.O.A. Std Dwg. 2362

Any existing utilities exposed during construction shall be supported and protected during construction. This shall be considered incidental to project construction and no separate payment will be made.

PH # = Pot hole location for existing utilities

AS BUILT INFORMATION

CONTRACTOR

WORK STAKED BY — DATE

INSPECTOR'S ACCEPTANCE BY — DATE

FIELD VERIFICATION BY — DATE

DRAWINGS CORRECTED BY — DATE

MICRO–FILM INFORMATION

RECORDED BY — DATE

RECORDED BY — DATE

RECORDED BY — DATE

BENCH MARKS

ALBUQUERQUE CONTROL SURVEY B.M. NO. 17–J12

LOCATED 2.3 MILES WEST OF DOWNTOWN ALBUQUERQUE SOUTHWEST SIDE OF ATRISCO RD.

THE STATION IS AN ACS 3 1/4" ALUM. CAP RIVETTED TO A PIPE 0.25 FT. ABOVE GROUND AND IS STAMPED "17–J12, 1999"

PLANE COORDINATES: X=367999.51, Y=1489049.30, EL= 4955.128

SURVEY INFORMATION

FIELD NOTES

| NO. | BY | DATE |
|---|---|---|
| 1 | | |
| 2 | | |
| 3 | | |
| 4 | | |
| 5 | | |
| 6 | | |
| 7 | | |

ENGINEER'S SEAL

RICHARD LOVATO NEW MEXICO 6823 REGISTERED PROFESSIONAL ENGINEER

| NO. | DATE | REMARKS | BY |
|---|---|---|---|
| 1 | | | |
| 2 | | | |
| 3 | | | |
| 4 | | | |

REVISIONS

DESIGN

DESIGNED BY: R.L. — DATE: JUL. 2003

DRAWN BY: P.R. / A.B. — DATE: JUL. 2003

CHECKED BY: J.A.A. — DATE: JUL. 2003

LARKIN GROUP, INC.
CONSULTING ENGINEERS AND SURVEYORS
8500 MENAUL BLVD. NE A–440
(505) 275–7500

CITY OF ALBUQUERQUE
PUBLIC WORKS DEPARTMENT
ENGINEERING DIVISION

TITLE: CENTRAL – ATRISCO DRAINAGE IMPROVEMENTS
STORM DRAINAGE DETAILS

| Design Review Committee | City Engineer Approval | Last Design Update | Mo./Day/Yr. | Mo./Day/Yr. |
|---|---|---|---|---|
| | | | | |

| City Project No. | Zone Map No. | Sheet | Of |
|---|---|---|---|
| 674902 | K–12–Z | 10 | 21 |

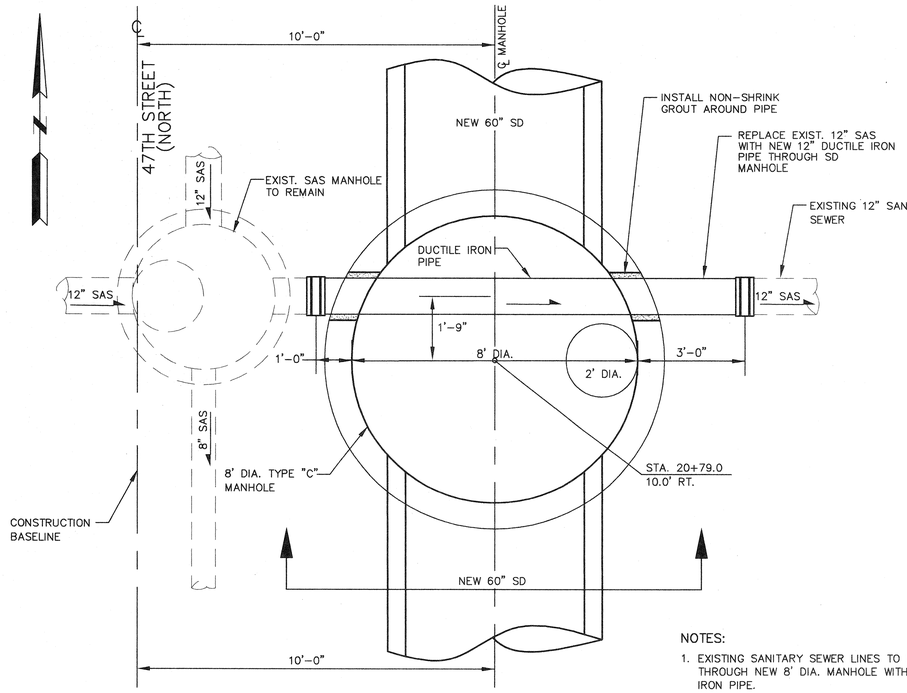


PLAN

SCALE: 1/2"=1'

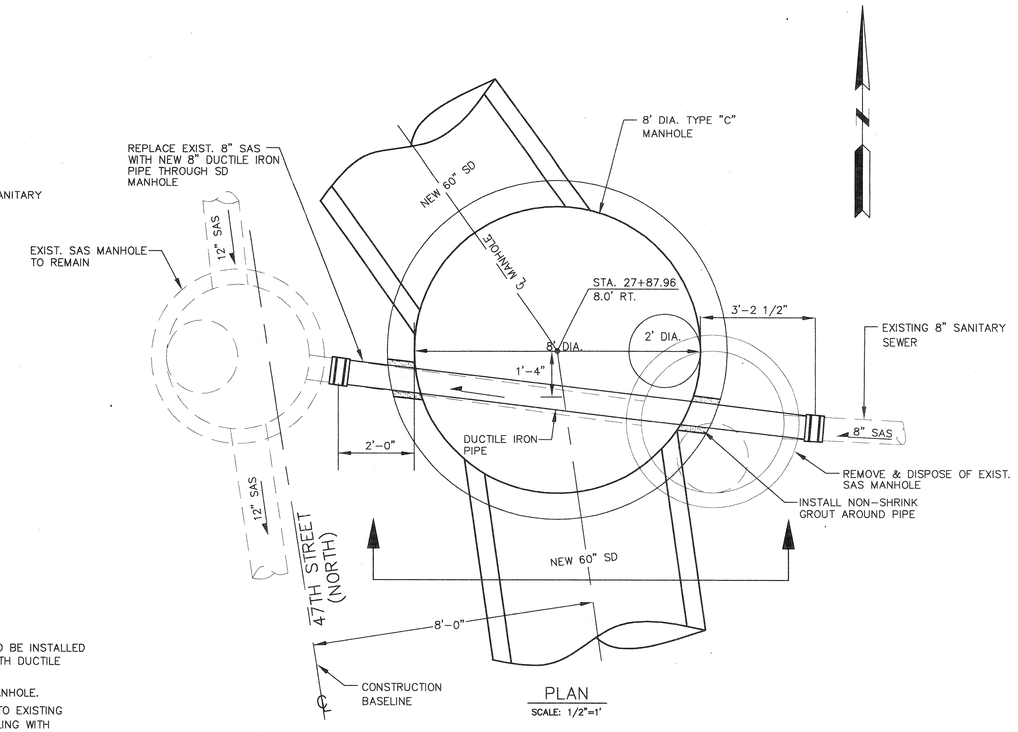


PLAN

SCALE: 1/2"=1'

NOTES:

1. EXISTING SANITARY SEWER LINES TO BE INSTALLED THROUGH NEW 8' DIA. MANHOLE WITH DUCTILE IRON PIPE.
2. NO JOINTS WILL BE ALLOWED IN MANHOLE.
3. CONNECT NEW DUCTILE IRON PIPE TO EXISTING WITH ELASTOMERIC ADAPTOR COUPLING WITH STAINLESS STEEL BANDS.
4. BYPASS PUMPING OR TEMPORARY PLUGGING OF LINE FOR INSTALLATION WILL BE INCLUDED IN PRICE BID FOR DUCTILE IRON PIPE THROUGH MANHOLE.
5. PAYMENT FOR THIS WORK WILL BE MADE UNDER BID ITEM "DUCTILE IRON PIPE THROUGH MANHOLE" AND SHALL INCLUDE FURNISHING AND INSTALLING ALL SANITARY SEWER PIPE MATERIAL REQUIRED.

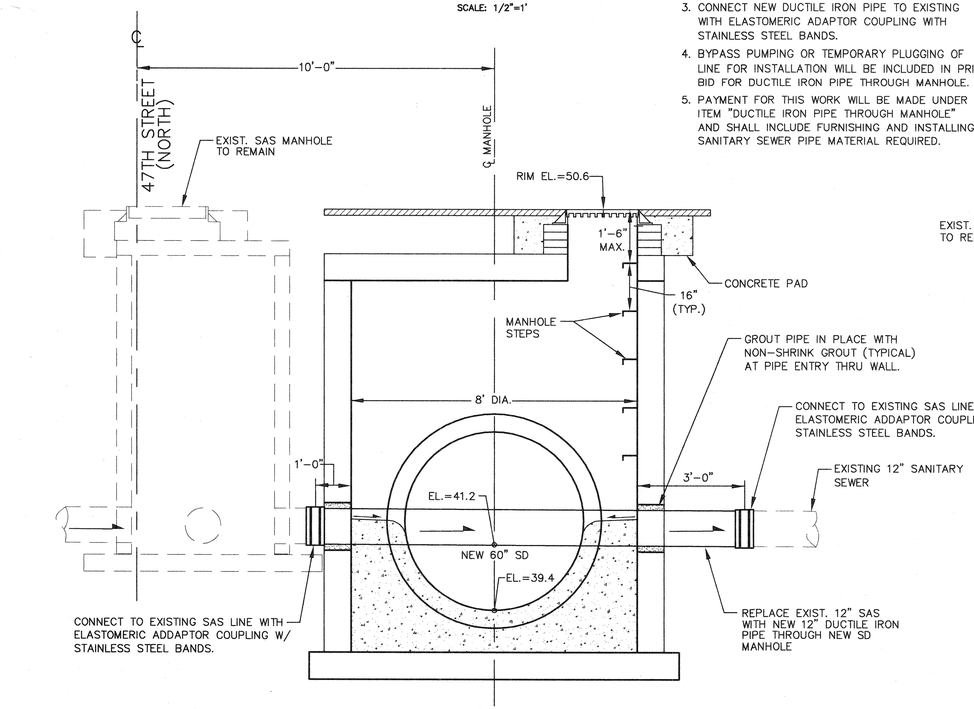


ELEVATION

TYPE "C" MANHOLE
8' DIA. STORM DRAIN MANHOLE DETAIL
47TH STREET (NORTH) STA. 20+79.0, 10.0' RT.

SCALE: 1/2"= 1'

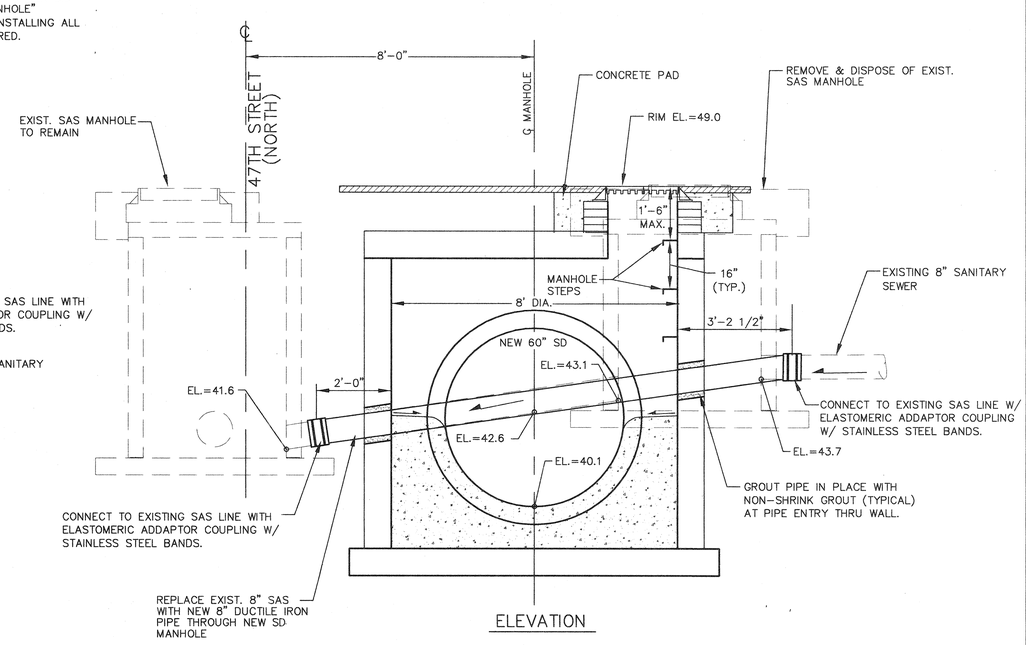


ELEVATION

TYPE "C" MANHOLE
8' DIA. STORM DRAIN MANHOLE DETAIL
47TH STREET (NORTH) STA. 27+87.96, 8.0' RT.

SCALE: 1/2"= 1'

## NOTE

Any water service lines that need to be replaced shall be replaced with copper tubing and no splices from meter to main. As per C.O.A. Std Dwg. 2362

Any existing utilities exposed during construction shall be supported and protected during construction. This shall be considered incidental to project construction and no separate payment will be made.

PH # = Pot hole location for existing utilities


LARKIN GROUP, INC.
CONSULTING ENGINEERS AND SURVEYORS
8500 MENAUL BLVD. NE A-440
(505) 275-7500


| NO. | DATE | REMARKS | BY |
|---|---|---|---|
| 4 | | | |
| 3 | | | |
| 2 | | | |
| 1 | | | |

REVISIONS

DESIGN

DESIGNED BY: R.L. DATE: JUL. 2003
DRAWN BY: P.R. / A.B. DATE: JUL. 2003
CHECKED BY: J.A.A. DATE: JUL. 2003

ENGINEER'S SEAL

RICHARD LOVATO
NEW MEXICO
6823
REGISTERED PROFESSIONAL ENGINEER

AS BUILT INFORMATION

| | |
|---|---|
| CONTRACTOR | |
| WORK STAKED BY | DATE |
| INSPECTOR'S ACCEPTANCE BY | DATE |
| FIELD VERIFICATION BY | DATE |
| DRAWINGS CORRECTED BY | DATE |

MICRO-FILM INFORMATION

| | |
|---|---|
| RECORDED BY | DATE |
| RECORDED BY | DATE |
| RECORDED BY | DATE |

BENCH MARKS

ALBUQUERQUE CONTROL SURVEY B.M. NO. 17-J12

LOCATED 2.3 MILES WEST OF DOWNTOWN ALBUQUERQUE SOUTHWEST SIDE OF ATRISCO RD.

THE STATION IS AN ACS 3 1/4" ALUM. CAP RIVETTED TO A PIPE 0.25 FT. ABOVE GROUND AND IS STAMPED "17-J12, 1999".

PLANE COORDINATES: X=367999.51, Y=1489049.30, EL= 4955.128

SURVEY INFORMATION

FIELD NOTES

| NO. | BY | DATE |
|---|---|---|
| 1 | | |
| 2 | | |
| 3 | | |
| 4 | | |
| 5 | | |
| 6 | | |
| 7 | | |

CITY OF ALBUQUERQUE
PUBLIC WORKS DEPARTMENT
ENGINEERING DIVISION

TITLE: CENTRAL – ATRISCO DRAINAGE IMPROVEMENTS
STORM DRAINAGE MANHOLE DETAILS

| Design Review Committee | City Engineer Approval | Last Design Update | Mo./Day/Yr. | Mo./Day/Yr. |
|---|---|---|---|---|
| | | | | |

| City Project No. | Zone Map No. | Sheet | Of |
|---|---|---|---|
| 674902 | K-12-Z | 11 | 21 |

# CONSTRUCTION TRAFFIC CONTROL GENERAL NOTES

1. CONTRACTOR MUST OBTAIN FROM CONSTRUCTION COORDINATION AN EXCAVATION/BARRICADING PERMIT BEFORE ENGAGING IN ANY CONSTRUCTION, MAINTENANCE OR REPAIR WORK IN ANY OF THE CITY OF ALBUQUERQUE'S RIGHTS-OF-WAY. EMERGENCY WORK THAT WOULD PRESERVE LIFE OR PROPERTY IS EXCLUDED WITH THE UNDERSTANDING, THAT A PERMIT SHALL BE OBTAINED WITHIN 24 TO 48 HOURS.

2. CONTRACTOR SHALL AT THE TIME OF PERMIT REQUEST, SUBMIT FOR APPROVAL BY CONSTRUCTION COORDINATION, A TRAFFIC CONTROL PLAN DETAILING ALL EXISTING TOPOGRAPHY SUCH AS LANE WIDTHS, DRIVEWAYS, AND BUSINESS/RESIDENTIAL ACCESSES. THE TRAFFIC CONTROL PLAN SHALL INCLUDE ALL PHASES OF WORK AND SCHEDULES INVOLVED IN THE CONSTRUCTION PROJECT. ANY SEPERATE PHASES OF A CONSTRUCTION PROJECT SHALL BE GIVEN AN INDIVIDUAL PERMIT EACH. BLANKET PERMITS WILL NOT BE ISSUED.

3. THESE TYPICAL TRAFFIC CONTROL PLANS DO NOT REFLECT THE EXISTING TOPOGRAPHY SUCH AS DRIVEWAYS, LANE WIDTHS, AND BUSINESS/RESIDENTIAL ACCESSES. EVERY LOCATION THAT REQUIRES CONSTRUCTION TRAFFIC CONTROL SHALL HAVE A DETAILED TRAFFIC CONTROL PLAN SHOWING ALL EXISTING TOPOGRAPHY.

4. CONSTRUCTION SHALL NOT BEGIN UNLESS A TRAFFIC CONTROL PLAN HAS BEEN APPROVED AND VERIFIED BY CONSTRUCTION COORDINATION.

5. CONSTRUCTION COORDINATION SHALL BE NOTIFIED 48 HOURS PRIOR TO ANY TRAFFIC CONTROL CHANGES NEEDED BY CONTRACTOR, THAT WERE NOT PREVIOUSLY APPROVED. THESE TRAFFIC CONTROL CHANGES SHALL BE REQUESTED IN WRITING ACCOMPANIED WITH A TRAFFIC CONTROL PLAN REFLECTING SUCH CHANGES.

6. ALL CONSTRUCTION TRAFFIC CONTROL DEVICES SHALL COMPLY TO THE MANUAL ON UNIFORM TRAFFIC CONTROL DEVICES (MUTCD), LATEST EDITION. IT IS THE RESPONSIBILITY OF THE CONTRACTOR TO INSTALL, SERVICE AND MAINTAIN ALL TRAFFIC CONTROL DEVICES. TRAFFIC CONTROL DEVICES SHALL NOT BE REMOVED OR ALTERED IN ANY WAY WITHOUT THE APPROVAL OF CONSTRUCTION COORDINATION, PER SECTION 6A-4 OF THE MUTCD, LATEST EDITION.

7. THE CONSTRUCTION TRAFFIC CONTROL INITIAL SET-UP SHALL BE BY AN AMERICAN TRAFFIC SAFETY SERVICES ASSOCIATION (ATSSA) CERTIFIED WORKSITE TRAFFIC SUPERVISOR. THE MAINTENANCE AND SERVICING SHALL ALSO BE DONE BY AN ATSSA CERTIFIED WORKSITE TRAFFIC SUPERVISOR OR EQUIVALENT.

8. CONTRACTOR IS RESPONSIBLE TO MAINTAIN AND SERVICE ALL TRAFFIC CONTROL DEVICES 24 HOURS A DAY, 7 DAYS A WEEK THROUGHOUT LENGTH OF PROJECT. CONTRACTOR IS RESPONSIBLE THAT ALL TRAFFIC CONTROL DEVICES COMPLY WITH THE MUTCD, LATEST EDITION.

9. ALL ADVANCE WARNING SIGNS SHALL BE DOUBLE INDICATED WHENEVER THERE ARE MULTI-LANE TRAFFIC IN ANY ONE GIVEN DIRECTION AND THERE IS SUFFICIENT MEDIAN SPACE.

10. ALL BARRICADES IN ALL TAPERS AND TANGENTS SHALL BE PLACED APART, A DISTANCE MEASURED IN FEET, EQUAL TO THAT OF THE POSTED SPEED LIMIT. NO EXCEPTIONS UNLESS APPROVED BY CONSTRUCTION COORDINATION PER MUTCD SECTION 6A-4.

△1 11. ALL WORK IN ARTERIAL ROADWAYS SHALL BE ON A CONTINUOUS 24 HOUR PER DAY BASIS UNTIL COMPLETED.

12. CONTRACTOR IS RESPONSIBLE TO PROVIDE CONSTRUCTION COORDINATION, A WEEKLY LOG OF DAILY INSPECTIONS OF BARRICADE AND MAINTENANCE SCHEDULES ON PROJECTS THAT ARE OVER ONE WEEK DURATION.

13. EQUIPMENT OR MATERIALS SHALL NOT BE STORED WITHIN 15 FEET OF A TRAVELED TRAFFIC LANE DURING NON-WORKING HOURS WITHOUT THE APPROVAL OF CONSTRUCTION COORDINATION.

14. CONTRACTOR SHALL PROVIDE AND MAINTAIN A SAFE AND ADEQUATE MEANS OF CHANNELIZING PEDESTRIAN TRAFFIC AROUND AND THROUGH THE CONSTRUCTION AREA.

15. CONTRACTOR IS RESPONSIBLE FOR OBLITERATION OF ANY CONFLICTING STRIPING AND RESPONSIBLE FOR ALL TEMPORARY STRIPING.

16. CONTRACTOR SHALL MAINTAIN ACCESS TO ALL FACILITIES, BUSINESSES AND/OR RESIDENTS AT ALL TIMES.

17. CONTRACTOR SHALL PROVIDE ACCESS SIGNS FOR BUSINESSES LOCATED WITHIN THE CONSTRUCTION AREA UNDER THE SUPERVISION OF CONSTRUCTION COORDINATION. EACH ACCESS SIGN SHALL HAVE 5 INCH, WHITE OPAQUE LETTERING ON BLUE REFLECTORIZED BACKGROUND. ACCESS SIGNS SHALL BE CONSIDERED INCIDENTAL TO THE BID AND NOT PART OF THE CONTRACT UNLESS OTHERWISE STATED. NO MORE THAN 3 BUSINESSES SHALL BE LISTED ON A ACCESS SIGN. SHOPPING CENTERS AND MALLS SHALL BE LISTED AS SUCH.

18. ALL ADVANCE WARNING SIGNS SHALL MEET THE MINIMUM REFLECTIVE INTENSITY REQUIREMENTS SET FORTH BY THE CITY OF ALBUQUERQUE. CONSTRUCTION COORDINATION SHALL DETERMINE ALL REQUIREMENTS AND APPROVE OR DISAPPROVE ANY ADVANCE WARNING SIGN PER SECTION 6A-4 OF THE MUTCD, LATEST EDITION.

△2 19. 48 HOURS PRIOR TO OCCUPYING OR CLOSING OF A RIGHT-OF-WAY, CONTRACTOR SHALL NOTIFY: POLICE, FIRE DEPARTMENT, SCHOOLS, HOSPITALS, TRANSIT AUTHORITY, BUSINESSES AND/OR RESIDENTS THAT WILL BE AFFECTED BY THE CONSTRUCTION.

20. ANY FIELD ADJUSTMENTS SHALL BE APPROVED BY CONSTRUCTION COORDINATION.

21. EXCAVATIONS SHALL BE PLATED, TEMPORARILY PATCHED OR RESURFACED PRIOR TO OPENING OF TRAFFIC. A MINIMUM OF 11 FEET SHALL BE PROVIDED FOR TRAFFIC IN ANY GIVEN DIRECTION. CONTRACTOR IS RESPONSIBLE FOR ANY WORK INVOLVED IN SATISFYING THESE REQUIREMENTS.

22. CONTRACTOR SHALL AT ALL TIMES COMPLY WITH THE FOLLOWING:
    1. STANDARDS AND REQUIREMENTS SET FORTH IN THE MANUAL ON UNIFORM TRAFFIC CONTROL DEVICES, LATEST EDITION.
    2. THE CITY OF ALBUQUERQUE TRAFFIC CODE, LATEST EDITION.
    3. SECTION 19 OF THE CITY OF ALBUQUERQUE'S STANDARD SPECIFICATIONS FOR PUBLIC WORK CONSTRUCTION, AS WELL AS OTHER SECTIONS.

23. FAILURE TO COMPLY WITH ANY OF THE ABOVE MENTIONED, WILL BE ADEQUATE CAUSE TO CEASE ALL WORK ON ANY CONSTRUCTION PROJECT. WORK WILL NOT RESUME UNTIL ALL REQUIREMENTS ARE ADDRESSED AND APPROVED BY CONSTRUCTION COORDINATION.

24. ALL TRAFFIC CONTROL DEVICES SHALL BE KEPT IN NEW-CLEAN CONDITION, WASHING OF EQUIPMENT IS INCIDENTAL TO IT'S PLACEMENT AND MAINTENANCE.

25. TRAFFIC CONTROL STANDARDS APPLY ONLY WHERE THE CONSTRUCTION TRAFFIC CONTROL PLANS ARE NOT SPECIFIC.

△3 26. ADVANCE WARNING SIGNS SHALL BE 36"x36" MIN. WITH SUPER ENGINEERING GRADE SHEETING OR BETTER. MOUNTING HEIGHT AT TOP OF SIGN SHALL BE THE SAME AS FOR A 48" SIGN AS INDICATED IN THE M.U.T.C.D.

△4 27. CONTRACTOR SHALL MAINTAIN A GRAFFITI-FREE WORKSITE. ALL GRAFFITI SHALL BE PROMPTLY REMOVED FROM ALL EQUIPTMENT, BOTH PERMANENT AND TEMPORARY.

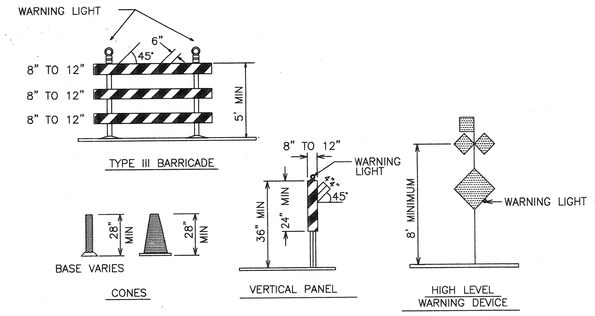


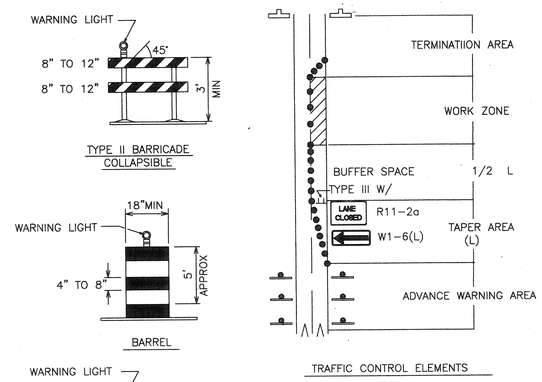


## LEGEND

- WORK AREA
- BARRICADE – TYPE I, TYPE II, OR BARREL
- BARRICADE – TYPE III
- VERTICAL PANEL
- WARNING SIGN
- D — DISTANCE BETWEEN SIGNS – A DISTANCE MEASURED IN FEET EQUAL TO A VALUE OF TEN TIMES THE SPEED LIMIT OF THE STREET
- FLAGMAN POSITION
- S — SPACING BETWEEN BARRICADES – A DISTANCE MEASURED IN FEET EQUAL TO THE STREET LIMIT OF THE STREET
- L — TAPER LENGTH – SEE CHART BELOW

THE TANGENT LENGTH IS EQUAL TO THE TAPER LENGTH FOR A GIVEN STREET.

## TAPER REQUIREMENT

| SPEED LIMIT (MPH) | TAPER LENGTH(L) (FEET) 10' LANE | 11' LANE | 12' LANE | MINIMUM NUMBER OF DEVICES FOR TAPER | MAXIMUM DEVICE SPACING IN FEET ALONG TAPER | AFTER TAPER |
|---|---|---|---|---|---|---|
| 20 | 70 | 75 | 80 | 5 | 20 | 20 |
| 25 | 105 | 115 | 125 | 6 | 25 | 25 |
| 30 | 150 | 165 | 180 | 7 | 30 | 30 |
| 35 | 205 | 225 | 245 | 8 | 35 | 35 |
| 40 | 270 | 295 | 320 | 9 | 40 | 40 |
| 45 | 450 | 495 | 540 | 13 | 45 | 45 |
| 50 | 500 | 550 | 600 | 13 | 50 | 50 |
| 55 | 550 | 605 | 660 | 13 | 55 | 55 |

## RECOMMENDED SIGN SPACING(D) FOR ADVANCE WARNING SIGN SERIES

| SPEED MILES PER HOUR | MINIMUM DISTANCE IN FEET BETWEEN SIGNS | FROM LAST SIGN TO TAPER |
|---|---|---|
| 0-20 | 10 X SPEED LIMIT | 10 X SPEED LIMIT |
| 25-30 | 10 X SPEED LIMIT | 10 X SPEED LIMIT |
| 30-35 | 10 X SPEED LIMIT | 10 X SPEED LIMIT |
| 40-45 | 10 X SPEED LIMIT | 10 X SPEED LIMIT |
| 50-60 | 10 X SPEED LIMIT | 10 X SPEED LIMIT |

### TAPER CRITERIA

| TYPE OF TAPER | TAPER LENGTH |
|---|---|
| UPSTREAM TAPER: | |
| MERGING TAPER | L MINIMUM |
| SHIFTING TAPER | 1/2 L MINIMUM |
| SHOULDER TAPER | 1/2 L MINIMUM |
| TWO-WAY TRAFFIC TAPER | 100 FEET MAXIMUM |
| DOWNSTREAM TAPERS | 100 FEET PER LANE |

### TAPER LENGTH COMPUTATION

SPEED LIMIT

40 MPH OR LESS $L = \frac{WS^2}{60}$

40 MPH OR GREATER $L = W \times S$

L = TAPER LENGTH
W = WIDTH OF OFFSET IN FEET
S = POSTED SPEED OR OFF-PEAK 85-PERCENTILE SPEED IN MPH

## SIGN FACE DETAILS

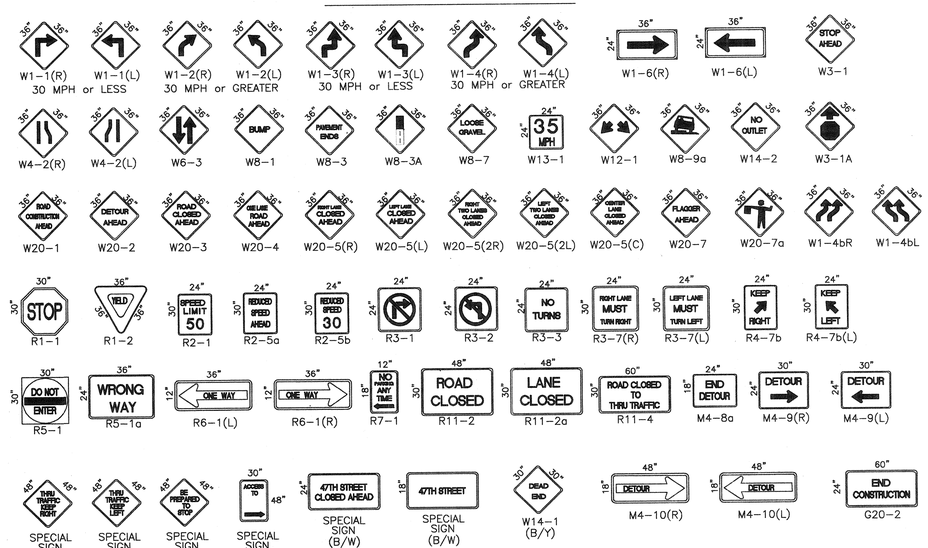


ALL CONSTRUCTION WARNING SIGNS SHALL HAVE A BLACK LEGEND ON A ORANGE BACKGROUND UNLESS OTHERWISE NOTED.

AS-BUILT INFORMATION
CONTRACTOR — DATE
WORK STAKED BY — DATE
INSPECTOR'S ACCEPTANCE BY — DATE
FIELD VERIFICATION BY — DATE
DRAWINGS CORRECTED BY — DATE
MICRO-FILM INFORMATION
RECORDED BY — DATE
NO.

BENCH MARKS

SURVEY INFORMATION
FIELD NOTES

| NO. | BY | DATE |
|---|---|---|
| | | |

ENGINEER'S SEAL

| NO. | DATE | REMARKS | BY |
|---|---|---|---|
| △1 | 9/25/97 | ADD NOTE NO. 27 | J.D.L. |
| △2 | 9/24/97 | REVISED NOTE NO. 26 | J.D.L. |
| △3 | 9/24/97 | REVISED NOTE NO. 19 | J.D.L. |
| △4 | 9/24/97 | REVISED NOTE NO. 11 | J.D.L. |

REVISIONS

DESIGN
DESIGNED BY BOHANNAN HUSTON DATE: JUL. 2003
DRAWN BY BOHANNAN HUSTON DATE: JUL. 2003
CHECKED BY BOHANNAN HUSTON DATE: JUL. 2003

CITY OF ALBUQUERQUE
PUBLIC WORKS DEPARTMENT
ENGINEERING DEVELOPMENT GROUP

TITLE: TRAFFIC CONTROL
SIGNING AND CONSTRUCTION TRAFFIC CONTROL STANDARDS

| DESIGN REVIEW COMMITTEE | CITY ENGINEER APPROVAL | LAST DESIGN UPDATE | MO./DAY/YR. | MO./DAY/YR. |
|---|---|---|---|---|
| COA | STD | | | |

CITY PROJECT NO. 674902 ZONE MAP NO. SHEET 12 OF 21

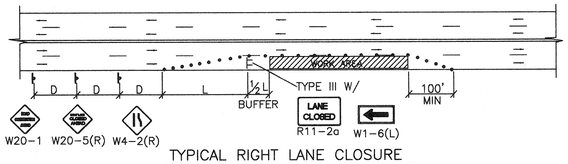


TYPICAL RIGHT LANE CLOSURE

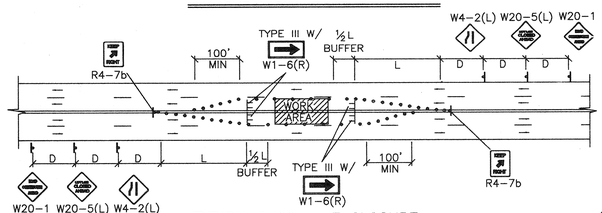


TYPICAL LEFT LANE CLOSURE

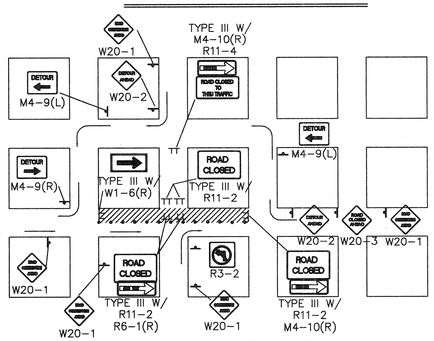


TYPICAL ONE DIRECTION DETOUR

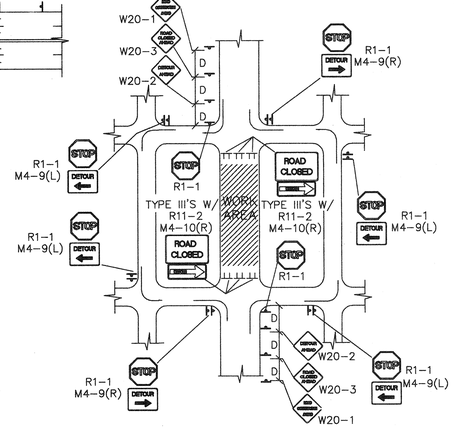


TYPICAL STREET CLOSURE

NOTE: (R1-1) BASED ON FIELD CONDITIONS.

NOTE:
MAY REQUIRE LEFT LANE CLOSURE DEPENDING ON FIELD CONDITIONS.

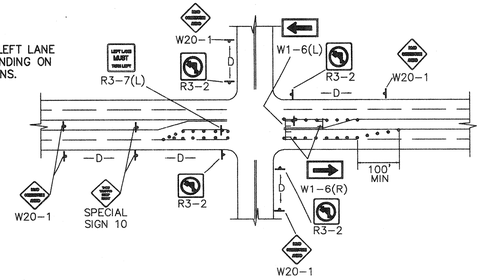


TYPICAL LANE CLOSURE AT INTERSECTION

NOTE: DEPENDING ON WORK ZONE LOCATION.

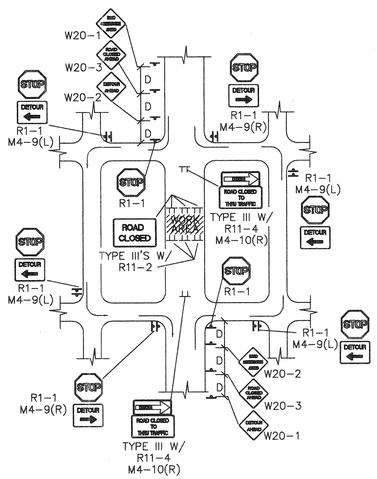


TYPICAL MID-BLOCK CLOSURE

NOTE: (R1-1) BASED ON FIELD CONDITIONS.

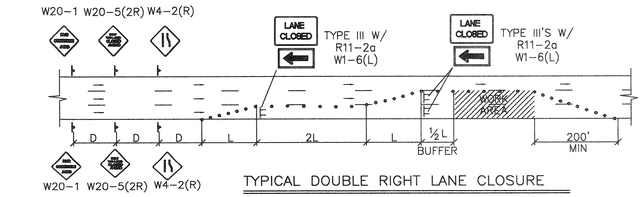


TYPICAL DOUBLE RIGHT LANE CLOSURE

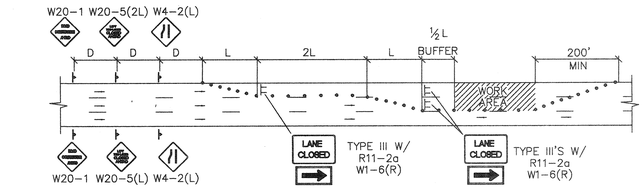


TYPICAL DOUBLE LEFT LANE CLOSURE

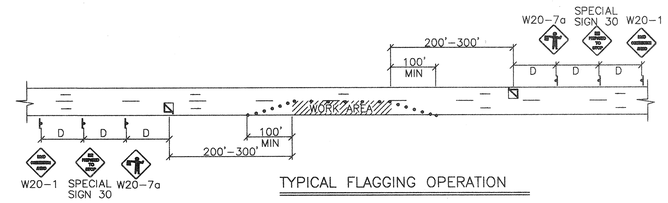


TYPICAL FLAGGING OPERATION

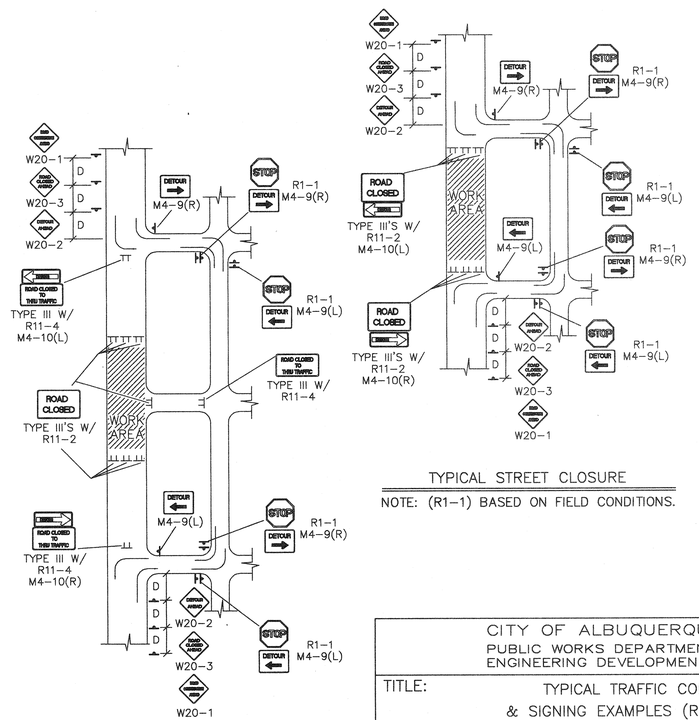


TYPICAL STREET CLOSURE

NOTE: (R1-1) BASED ON FIELD CONDITIONS.

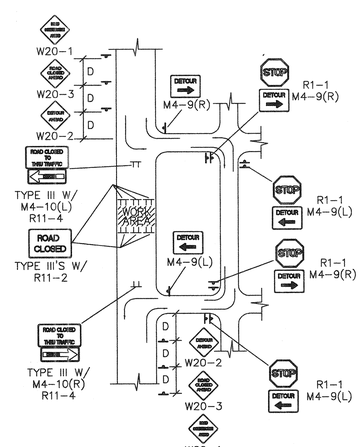


TYPICAL STREET CLOSURE

NOTE: (R1-1) BASED ON FIELD CONDITIONS.




TYPICAL STREET CLOSURE

NOTE: (R1-1) BASED ON FIELD CONDITIONS.

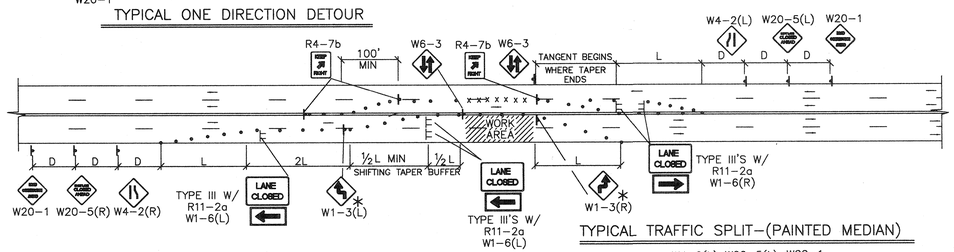


TYPICAL TRAFFIC SPLIT-(PAINTED MEDIAN)

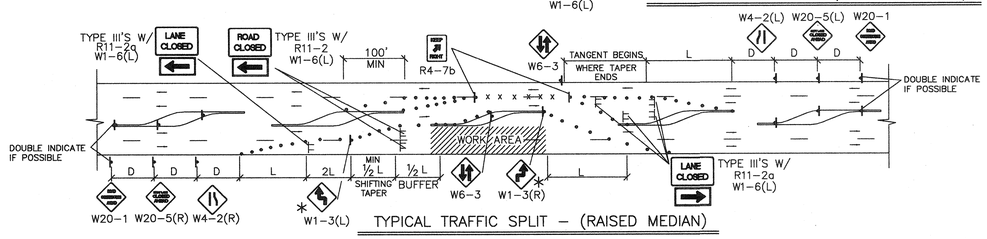


TYPICAL TRAFFIC SPLIT – (RAISED MEDIAN)

TRAFFIC SPLIT NOTES:

1. THE OFFSET DISTANCE MUST BE CALCULATED IN ALL SHIFTING TAPERS. THE OFFSET DISTANCES SHALL INCLUDE LANE WIDTHS PLUS MEDIAN WIDTHS.
2. 1/2 L IS THE MINIMUM DISTANCE FOR SHIFTING TAPERS.
3. REVERSE CURVES MAY BE IMPLEMENTED. ALL CURVE DATA SHALL BE CALCULATED.
4. MEDIAN REMOVAL SHALL BE REQUIRED IF 1/2 L OR REVERSE CURVE IS NOT SUFFICIENT. MEDIAN REMOVAL SHALL TAKE PLACE BEFORE SPLITS.
5. REDUCED SPEED MAY BE CONSIDERED.
6. ✳ USE W1-3 FOR 30 MPH OR LESS, W1-4 FOR SPEED 35 MPH OR GREATER.

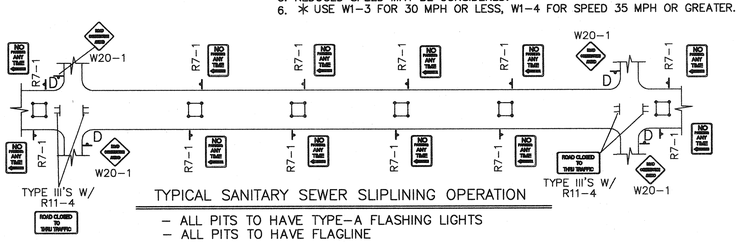


TYPICAL SANITARY SEWER SLIPLINING OPERATION

- ALL PITS TO HAVE TYPE-A FLASHING LIGHTS
- ALL PITS TO HAVE FLAGLINE

GENERAL NOTE:

ALL CONSTRUCTION WARNING SIGNS SHALL HAVE A BLACK LEGEND ON A ORANGE BACKGROUND.

⚠ ALL ADVANCE WARNING SIGNS SHALL BE A MINIMUM OF 36" THIRTY SIX INCHES BY 36" THIRTY SIX INCHES IN SIZE AND SHALL HAVE ONE WARNING LIGHT.

AS-BUILT INFORMATION
CONTRACTOR DATE
WORK STAKED BY DATE
INSPECTOR'S ACCEPTANCE BY DATE
FIELD VERIFICATION BY DATE
DRAWINGS CORRECTED BY DATE
MICRO-FILM INFORMATION
RECORDED BY DATE
NO.

BENCH MARKS

SURVEY INFORMATION
FIELD NOTES
NO. BY DATE

ENGINEER'S SEAL

| NO. | DATE | REMARKS | BY |
|---|---|---|---|
| 1 | 9/24/97 | REVISED GENERAL NOTE | J.D.L. |

REVISIONS

DESIGN
DESIGNED BY BOHANNAN HUSTON DATE: JUL. 2003
DRAWN BY BOHANNAN HUSTON DATE: JUL. 2003
CHECKED BY BOHANNAN HUSTON DATE: JUL. 2003

CITY OF ALBUQUERQUE
PUBLIC WORKS DEPARTMENT
ENGINEERING DEVELOPMENT GROUP

TITLE: TYPICAL TRAFFIC CONTROL & SIGNING EXAMPLES (REF MUTCD)

| DESIGN REVIEW COMMITTEE | CITY ENGINEER APPROVAL | LAST DESIGN UPDATE | MO./DAY/YR. | MO./DAY/YR. |
|---|---|---|---|---|
| COA STD | | | | |

CITY PROJECT NO. 674802 ZONE MAP NO. Sheet 13 Of 21

674902

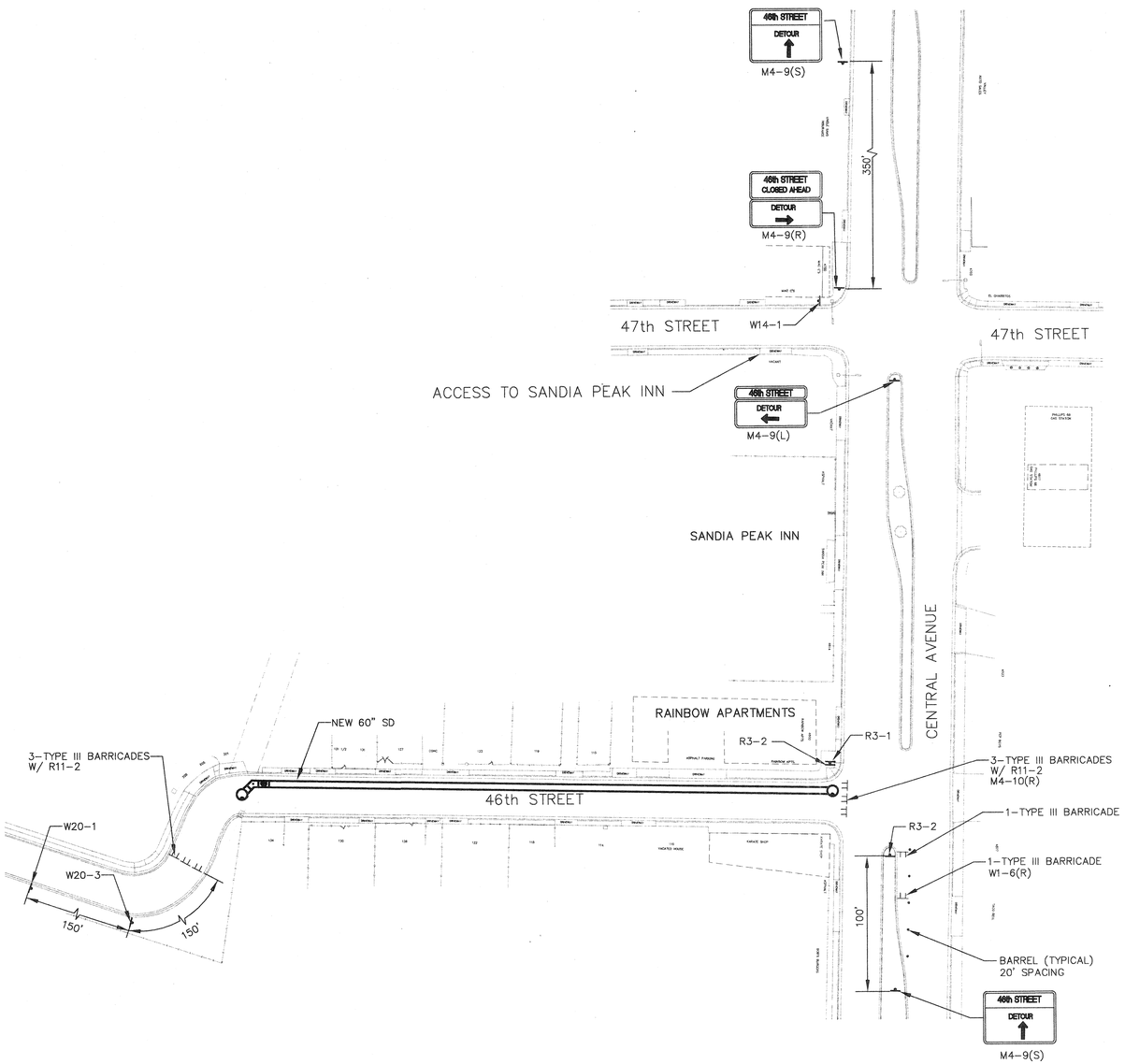


**PLAN**
SCALE: 1" = 50'

*46th STREET*
TRAFFIC CONTROL PLAN
PHASE I

CONSTRUCTION PHASE I:

CONSTRUCT STORM DRAIN FROM STA. 20+00 TO STA. 24+75 ON 46TH STREET.

CONSTRUCT TEMPORARY ACCESS FOR SANDIA PEAK INN (TO BE USED FOR PHASES II THROUGH V.) SEE PAGE 15.

*AS BUILT INFORMATION*

| | |
|---|---|
| CONTRACTOR | |
| WORK STAKED BY | DATE |
| INSPECTOR'S ACCEPTANCE BY | DATE |
| FIELD VERIFICATION BY | DATE |
| DRAWINGS CORRECTED BY | DATE |

*MICRO-FILM INFORMATION*

| | |
|---|---|
| RECORDED BY | DATE |
| RECORDED BY | DATE |
| RECORDED BY | DATE |

*BENCH MARKS*

ALBUQUERQUE CONTROL SURVEY B.M. NO. 17-J12
LOCATED 2.3 MILES WEST OF DOWNTOWN ALBUQUERQUE SOUTHWEST SIDE OF ATRISCO RD.
THE STATION IS AN ACS 3 1/4" ALUM. CAP RIVETTED TO A PIPE 0.25 FT. ABOVE GROUND AND IS STAMPED "17-J12, 1989".
PLANE COORDINATES: X=367999.51, Y=1489049.30, EL= 4955.128

*SURVEY INFORMATION*

FIELD NOTES

| NO. | BY | DATE |
|---|---|---|
| 1 | | |
| 2 | | |
| 3 | | |
| 4 | | |
| 5 | | |
| 6 | | |
| 7 | | |

*ENGINEER'S SEAL*

RICHARD LOVATO
NEW MEXICO
6823
PROFESSIONAL ENGINEER
REGISTERED
2/13/03

| NO. | DATE | REVISIONS | BY |
|---|---|---|---|
| 1 | | | |
| 2 | | | |
| 3 | | | |
| 4 | | | |

REMARKS

DESIGN

DESIGNED BY: R.L. DATE: JUL. 2003
DRAWN BY: A.B. DATE: JUL. 2003
CHECKED BY: J.A.A. DATE: JUL. 2003

LARKIN GROUP, P.C. INC.
CONSULTING ENGINEERS AND SURVEYORS
8500 MENAUL BLVD. NE A-440
(505) 275-7500

CITY OF ALBUQUERQUE
PUBLIC WORKS DEPARTMENT
ENGINEERING DIVISION

TITLE: CENTRAL – ATRISCO DRAINAGE IMPROVEMENTS
46th STREET
TRAFFIC CONTROL PLAN– PHASE I

| Design Review Committee | City Engineer Approval | Last Design Update | Mo./Day/Yr. | Mo./Day/Yr. |
|---|---|---|---|---|
| | | | | |

| City Project No. | Zone Map No. | Sheet | Of |
|---|---|---|---|
| 674902 | K-12-Z | 14 | 21 |

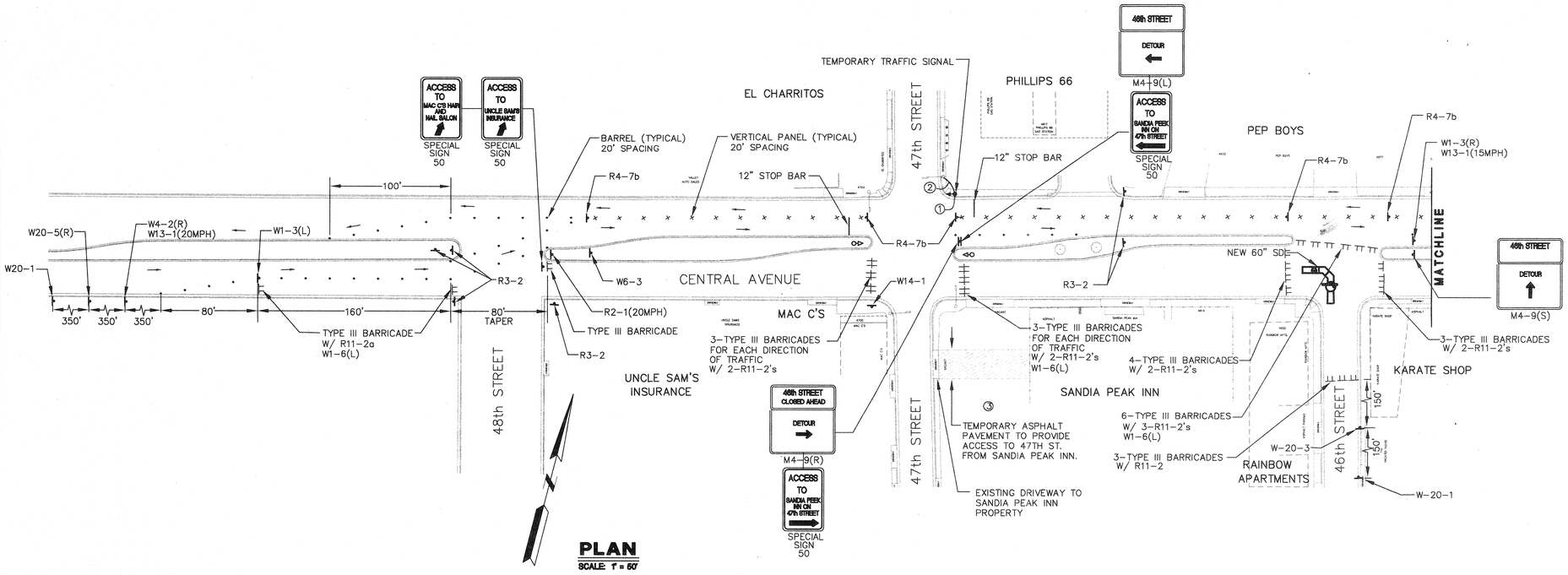


**PLAN**
SCALE: 1" = 50'

*CENTRAL AVENUE*
TRAFFIC CONTROL PLAN
PHASE II

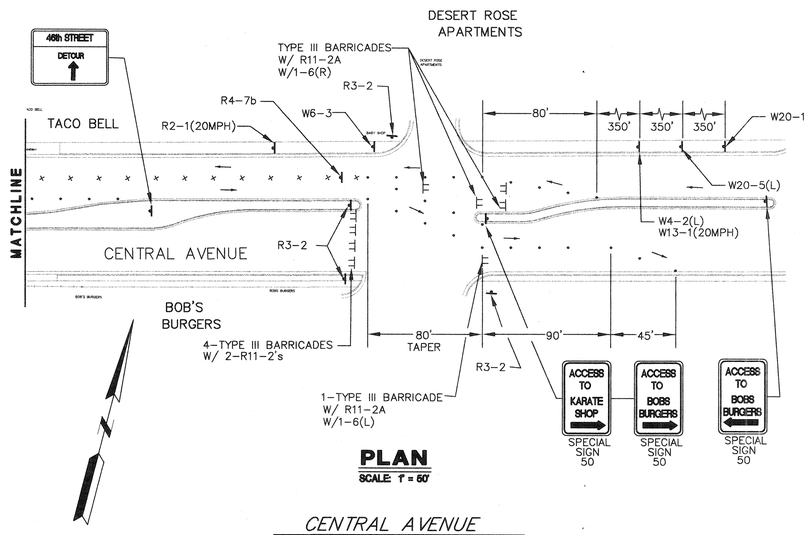


**PLAN**
SCALE: 1" = 50'

*CENTRAL AVENUE*
TRAFFIC CONTROL PLAN
PHASE II

## *PLACEMENT OF ADVANCE SIGNAGE AND MESSAGE BOARDS (PHASES II THROUGH V)*

FOR CONSTRUCTION PHASES II THROUGH V, PLACE A MESSAGE BOARD INDICATING "CENTRAL AVENUE CONSTRUCTION AHEAD. EXPECT DELAYS" AT THE TWO FOLLOWING LOCATIONS:

1. FOR EASTBOUND CENTRAL AVENUE TRAFFIC: APPROXIMATELY 500' WEST OF YUCCA DRIVE ON THE CENTRAL AVENUE MEDIAN.
2. FOR WESTBOUND CENTRAL AVENUE TRAFFIC: WEST OF TINGLEY DRIVE ON THE WIDE PART OF THE CENTRAL AVENUE MEDIAN.

PLACE CONSTRUCTION SIGNAGE INDICATING "CENTRAL AVENUE CONSTRUCTION AHEAD. EXPECT DELAYS." (60" X 36") AT THE FOLLOWING LOCATIONS:

1. 300 FEET EAST OF THE ATRISCO DR./CENTRAL AVE. INTERSECTION FOR WESTBOUND TRAFFIC
2. 100 FEET EAST OF THE OLD COORS DRIVE/CENTRAL AVE. FOR EASTBOUND TRAFFIC

## *CONSTRUCTION PHASE II:*

CONSTRUCT STORM DRAIN AT INTERSECTION OF CENTRAL AVENUE AND 46TH STREET. BEGIN AT STA. 14+00 ON CENTRAL AVENUE AND END AT STA. 24+75 ON 46TH STREET.

## KEYED NOTES:

1. PLACE TEMPORARY 15' PEDESTAL POLE WITH 3-SECTION SIGNAL HEAD.
2. LAY 2" RIGID CONDUIT WITH 5 CONDUCTOR CABLE ON GROUND FROM EXISTING MASTARM ON NORTHEAST CORNER OF INTERSECTION TO TEMPORARY PEDESTAL POLE.
3. CONTRACTOR SHALL COORDINATE ACCESS TO SANDIA PEAK INN OFF OF 47TH STREET WITH PROPERTY OWNER WHICH MAY INCLUDE PROVIDING A TEMPORARY DRIVEWAY, AND/OR A TEMPORARY PARKING LOT, AND SIDEWALK. CONSTRUCTION ON SANDIA PEAK INN PROPERTY SHALL BE PAID FOR UNDER THE BID ITEMS FOR TEMPORARY PAVEMENT, SIDEWALK, AND REMOVAL AND REPLACEMENT OF LANDSCAPING.
4. PHASES II THROUGH V SHALL NOT BE CONSTRUCTED DURING THE ALBUQUERQUE BALLOON FIESTA PERIOD (OCT. 2ND THROUGH OCT. 12TH).

AS BUILT INFORMATION

| CONTRACTOR | |
|---|---|
| WORK STAKED BY | DATE |
| INSPECTOR'S ACCEPTANCE BY | DATE |
| FIELD VERIFICATION BY | DATE |
| DRAWINGS CORRECTED BY | DATE |

MICRO-FILM INFORMATION

| | |
|---|---|
| RECORDED BY | DATE |
| RECORDED BY | DATE |
| RECORDED BY | DATE |

BENCH MARKS

ALBUQUERQUE CONTROL SURVEY B.M. NO. 17-J12
LOCATED 2.3 MILES WEST OF DOWNTOWN ALBUQUERQUE
SOUTHWEST SIDE OF ATRISCO RD.
THE STATION IS AN ACS 3 1/4" ALUM. CAP RIVETED TO A PIPE 0.25 FT. ABOVE GROUND AND IS STAMPED "17-J12, 1989".
PLANE COORDINATES: X=367999.51, Y=1489049.30, EL= 4955.128

SURVEY INFORMATION

FIELD NOTES

| NO. | BY | DATE |
|---|---|---|
| 1 | | |
| 2 | | |
| 3 | | |
| 4 | | |
| 5 | | |
| 6 | | |
| 7 | | |

ENGINEER'S SEAL

RICHARD J. OVERSTREET
NEW MEXICO
6823
REGISTERED PROFESSIONAL ENGINEER

| NO. | DATE | REVISIONS | BY |
|---|---|---|---|
| 1 | | | |
| 2 | | | |
| 3 | | | |
| 4 | | | |

REMARKS

DESIGN

DESIGNED BY: R.L. DATE: JUL. 2003
DRAWN BY: A.B. DATE: JUL. 2003
CHECKED BY: J.A.A. DATE: JUL. 2003

LARKIN GROUP, INC.
CONSULTING ENGINEERS AND SURVEYORS
8500 MENAUL BLVD. NE A-440
(505) 275-7500

CITY OF ALBUQUERQUE
PUBLIC WORKS DEPARTMENT
ENGINEERING DIVISION

TITLE: CENTRAL – ATRISCO DRAINAGE IMPROVEMENTS
CENTRAL AVENUE
TRAFFIC CONTROL PLAN– PHASE II

| Design Review Committee | City Engineer Approval | Last Design Update | Mo./Day/Yr. | Mo./Day/Yr. |
|---|---|---|---|---|
| | | | | |

| City Project No. | Zone Map No. | Sheet | Of |
|---|---|---|---|
| 674902 | K-12-Z | 15 | 21 |

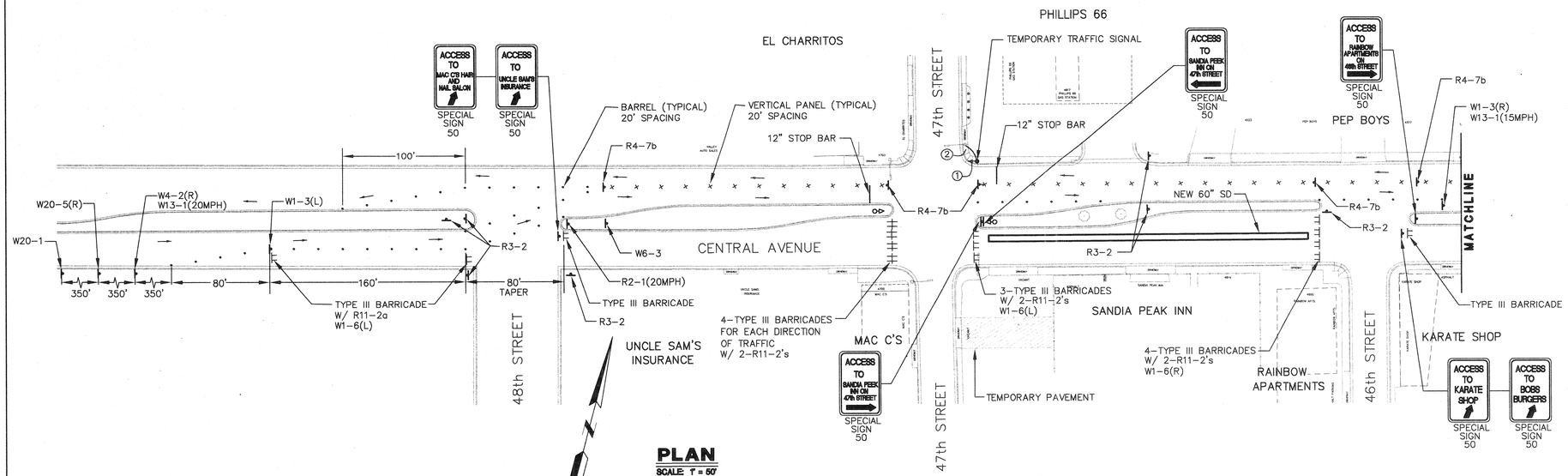


**PLAN**
SCALE: 1" = 50'

*CENTRAL AVENUE*
TRAFFIC CONTROL PLAN
PHASE III

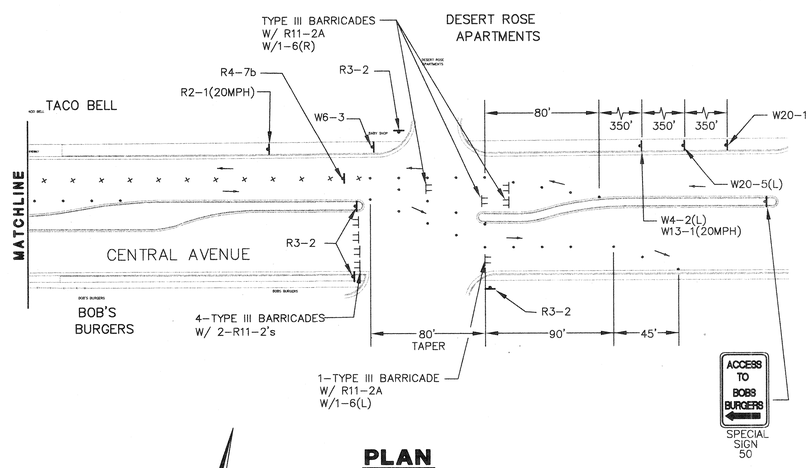


**PLAN**
SCALE: 1" = 50'

*CENTRAL AVENUE*
TRAFFIC CONTROL PLAN
PHASE III

CONSTRUCTION PHASE III:

CONSTRUCT STORM DRAIN FROM STA. 11+15 TO STA. 14+00 ON CENTRAL AVENUE.

KEYED NOTES:

1. TEMPORARY 15' PEDESTAL POLE WITH 3-SECTION SIGNAL HEAD.
2. 2" RIGID CONDUIT WITH 5 CONDUCTOR CABLE ON GROUND FROM EXISTING MASTARM ON NORTHEAST CORNER OF INTERSECTION TO TEMPORARY PEDESTAL POLE.

AS BUILT INFORMATION

| | | |
|---|---|---|
| CONTRACTOR | | |
| WORK STAKED BY | | DATE |
| INSPECTOR'S ACCEPTANCE BY | | DATE |
| FIELD VERIFICATION BY | | DATE |
| DRAWINGS CORRECTED BY | | DATE |

MICRO-FILM INFORMATION

| | |
|---|---|
| RECORDED BY | DATE |
| RECORDED BY | DATE |
| RECORDED BY | DATE |

BENCH MARKS

ALBUQUERQUE CONTROL SURVEY B.M. NO. 17-J12
LOCATED 2.3 MILES WEST OF DOWNTOWN ALBUQUERQUE SOUTHWEST SIDE OF ATRISCO RD.
THE STATION IS AN ACS 3 1/4" ALUM. CAP RIVETTED TO A PIPE 0.25 FT. ABOVE GROUND AND IS STAMPED "17-J12, 1989".
PLANE COORDINATES: X=367999.51, Y=1489049.30, EL= 4955.128

SURVEY INFORMATION

FIELD NOTES

| NO. | BY | DATE |
|---|---|---|
| 1 | | |
| 2 | | |
| 3 | | |
| 4 | | |
| 5 | | |
| 6 | | |
| 7 | | |

ENGINEER'S SEAL

RICHARD J. LOVATO NEW MEXICO 6823 REGISTERED PROFESSIONAL ENGINEER

| NO. | DATE | REMARKS | BY |
|---|---|---|---|
| 4 | | | |
| 3 | | | |
| 2 | | | |
| 1 | | | |

REVISIONS

DESIGN

DESIGNED BY: R.L. DATE: JUL. 2003
DRAWN BY: A.B. DATE: JUL. 2003
CHECKED BY: J.A.A. DATE: JUL. 2003

LARKIN GROUP, M.E.P.C.
CONSULTING ENGINEERS AND SURVEYORS
8500 MENAUL BLVD. NE A-440
(505) 275-7500

CITY OF ALBUQUERQUE
PUBLIC WORKS DEPARTMENT
ENGINEERING DIVISION

TITLE: CENTRAL – ATRISCO DRAINAGE IMPROVEMENTS
CENTRAL AVENUE
TRAFFIC CONTROL PLAN– PHASE III

| Design Review Committee | City Engineer Approval | Last Design Update | Mo./Day/Yr. | Mo./Day/Yr. |
|---|---|---|---|---|
| | | | | |

| City Project No. | Zone Map No. | Sheet | Of |
|---|---|---|---|
| 674902 | K-12-Z | 16 | 21 |

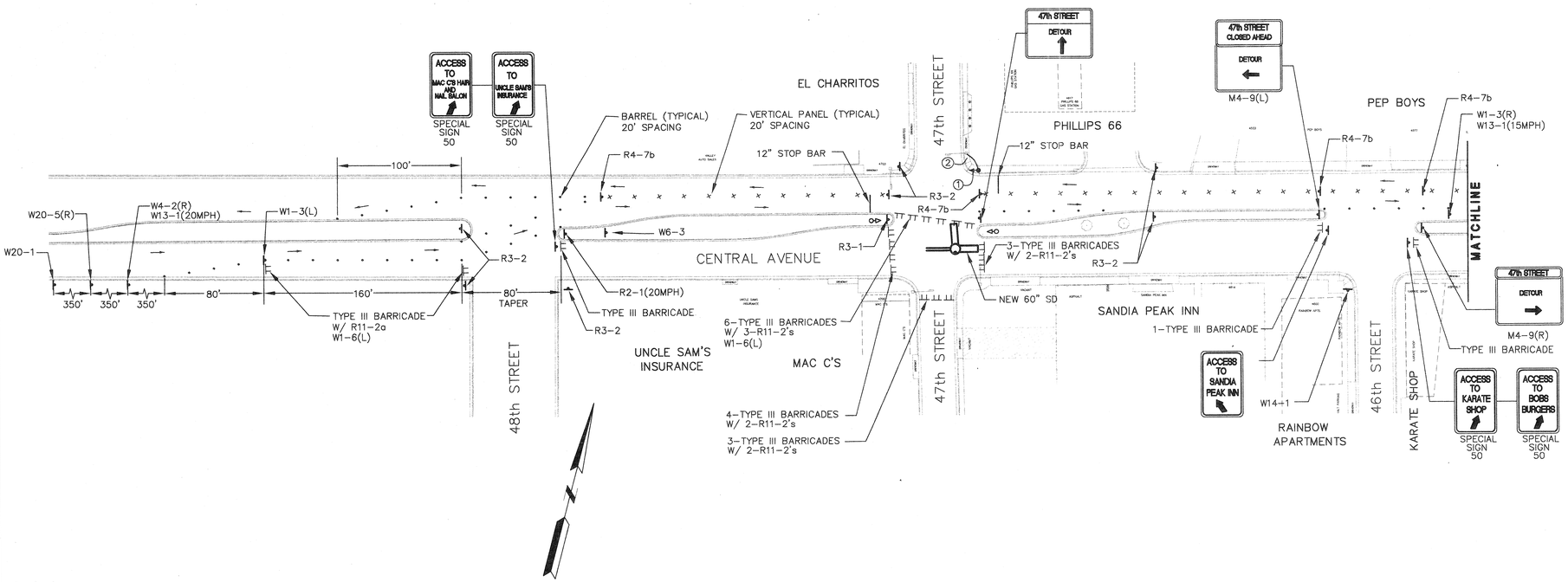


**PLAN**
SCALE: 1" = 50'

*CENTRAL AVENUE*
TRAFFIC CONTROL PLAN
PHASE IV

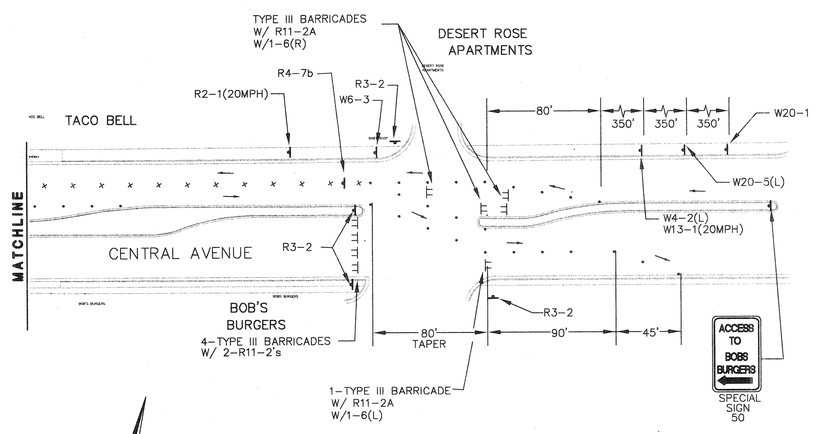


**PLAN**
SCALE: 1" = 50'

*CENTRAL AVENUE*
TRAFFIC CONTROL PLAN
PHASE IV

KEYED NOTES:

1. TEMPORARY 15' PEDESTAL POLE WITH 3-SECTION SIGNAL HEAD.
2. 2" RIGID CONDUIT WITH 5 CONDUCTOR CABLE ON GROUND FROM EXISTING MASTARM ON NORTHEAST CORNER OF INTERSECTION TO TEMPORARY PEDESTAL POLE.

CONSTRUCTION PHASE IV:

CONSTRUCT STORM DRAIN AT INTERSECTION OF CENTRAL AVE./47TH ST. IN THE EASTBOUND LANES FROM STA. 10+68 TO STA. 11+15 ON CENTRAL AVENUE.

*AS BUILT INFORMATION*

CONTRACTOR
WORK STAKED BY — DATE
INSPECTOR'S ACCEPTANCE BY — DATE
FIELD VERIFICATION BY — DATE
DRAWINGS CORRECTED BY — DATE

*MICRO-FILM INFORMATION*

RECORDED BY — DATE
RECORDED BY — DATE
RECORDED BY — DATE

*BENCH MARKS*

ALBUQUERQUE CONTROL SURVEY B.M. NO. 17-J12
LOCATED 2.3 MILES WEST OF DOWNTOWN ALBUQUERQUE SOUTHWEST SIDE OF ATRISCO RD.
THE STATION IS AN ACS 3 1/4" ALUM. CAP RIVETTED TO A PIPE 0.25 FT. ABOVE GROUND AND IS STAMPED "17-J12, 1989".
PLANE COORDINATES: X=367999.51, Y=1489049.30, EL= 4955.128

*SURVEY INFORMATION*

FIELD NOTES

| NO. | BY | DATE |
|---|---|---|
| 1 | | |
| 2 | | |
| 3 | | |
| 4 | | |
| 5 | | |
| 6 | | |
| 7 | | |

*ENGINEER'S SEAL*

RICHARD J. LOVATO, NEW MEXICO 6823, REGISTERED PROFESSIONAL ENGINEER

| NO. | DATE | REVISIONS | BY |
|---|---|---|---|
| 1 | | | |
| 2 | | | |
| 3 | | | |
| 4 | | | |

REMARKS

DESIGN

DESIGNED BY: R.L. — DATE: JUL. 2003
DRAWN BY: A.B. — DATE: JUL. 2003
CHECKED BY: J.A.A. — DATE: JUL. 2003


LARKIN GROUP, P.A., INC.
CONSULTING ENGINEERS AND SURVEYORS
8500 MENAUL BLVD. NE A-440
(505) 275-7500


CITY OF ALBUQUERQUE
PUBLIC WORKS DEPARTMENT
ENGINEERING DIVISION

TITLE: CENTRAL – ATRISCO DRAINAGE IMPROVEMENTS
CENTRAL AVENUE
TRAFFIC CONTROL PLAN– PHASE IV

| Design Review Committee | City Engineer Approval | Last Design Update | Mo./Day/Yr. | Mo./Day/Yr. |
|---|---|---|---|---|
| SEP 2003 | | | | |

| City Project No. | Zone Map No. | Sheet | Of |
|---|---|---|---|
| 674902 | K-12-Z | 17 | 21 |

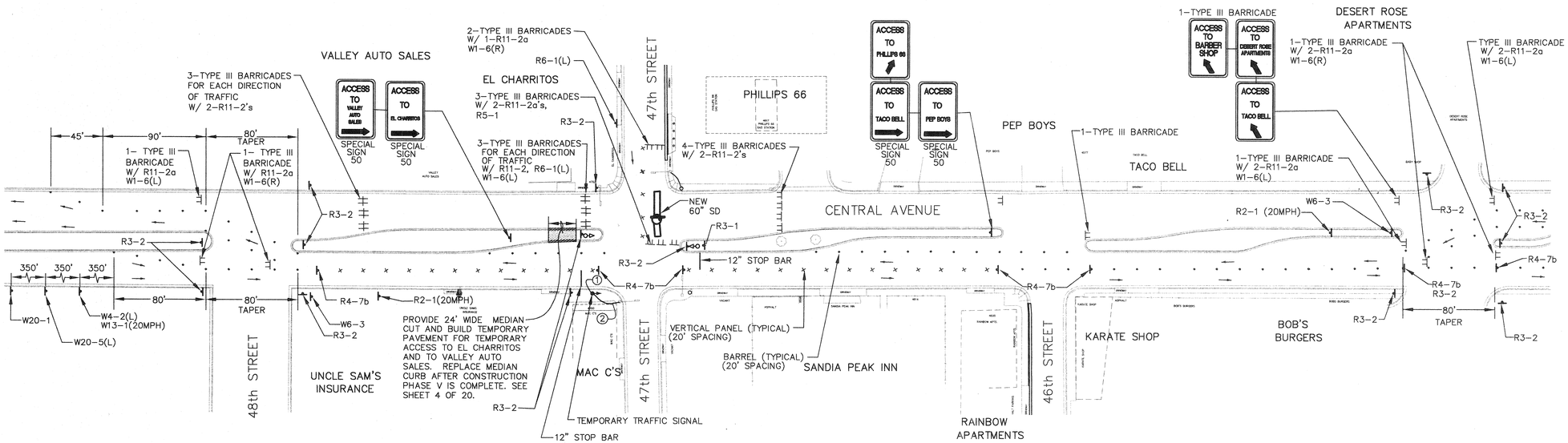


**PLAN**
SCALE: 1" = 50'

*CENTRAL AVENUE*
TRAFFIC CONTROL PLAN
PHASE V

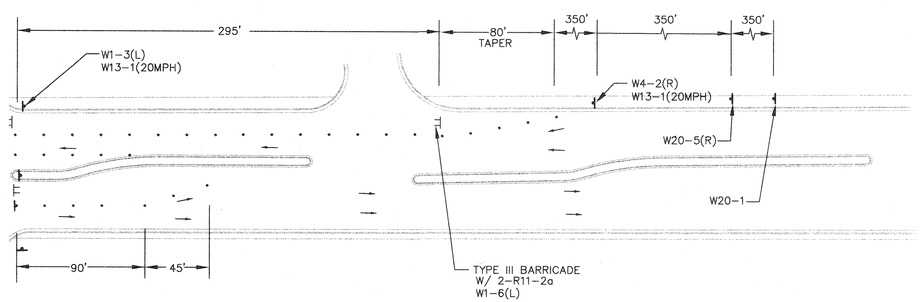


**PLAN**
SCALE: 1" = 50'

*CENTRAL AVENUE*
TRAFFIC CONTROL PLAN
PHASE V

CONSTRUCTION PHASE V:

CONSTRUCT STORM DRAIN AT 47TH ST./CENTRAL AVE. FROM STA. 20+60 TO STA. 21+10 ON 47TH STREET.

KEYED NOTES:

1. PLACE TEMPORARY 15' PEDESTAL POLE WITH 3-SECTION SIGNAL HEAD.
2. LAY 2" RIGID CONDUIT WITH 5 CONDUCTOR CABLE ON GROUND FROM EXISTING MASTARM ON SOUTHWEST CORNER OF INTERSECTION TO TEMPORARY PEDESTAL POLE.

AS BUILT INFORMATION
CONTRACTOR
STAKED BY DATE
INSPECTOR'S ACCEPTANCE BY DATE
FIELD VERIFICATION BY DATE
DRAWINGS CORRECTED BY DATE
MICRO-FILM INFORMATION
RECORDED BY DATE
RECORDED BY DATE
RECORDED BY DATE

BENCH MARKS
ALBUQUERQUE CONTROL SURVEY B.M. NO. 17-J12
LOCATED 2.3 MILES WEST OF DOWNTOWN ALBUQUERQUE
SOUTHWEST SIDE OF ATRISCO RD.
THE STATION IS AN ACS 3 1/4" ALUM. CAP RIVETTED TO A PIPE 0.25 FT. ABOVE GROUND AND IS STAMPED "17-J12, 1989".
PLANE COORDINATES: X=367999.51, Y=1489049.30, EL= 4955.128

SURVEY INFORMATION
FIELD NOTES

| NO. | BY | DATE |
|---|---|---|
| 1 | | |
| 2 | | |
| 3 | | |
| 4 | | |
| 5 | | |
| 6 | | |
| 7 | | |

ENGINEER'S SEAL
RICHARD LOVATO NEW MEXICO 6823 REGISTERED PROFESSIONAL ENGINEER

| NO. | DATE | REVISIONS | BY |
|---|---|---|---|
| 1 | | | |
| 2 | | | |
| 3 | | | |
| 4 | | | |

REMARKS
DESIGN
DESIGNED BY: R.L. DATE: JUL. 2003
DRAWN BY: A.B. DATE: JUL. 2003
CHECKED BY: J.A.A. DATE: JUL. 2003

LARKIN GROUP PLLC
CONSULTING ENGINEERS AND SURVEYORS
8500 MENAUL BLVD. NE A-440
(505) 275-7500

CITY OF ALBUQUERQUE
PUBLIC WORKS DEPARTMENT
ENGINEERING DIVISION

TITLE: CENTRAL – ATRISCO DRAINAGE IMPROVEMENTS
CENTRAL AVENUE
TRAFFIC CONTROL PLAN– PHASE V

| Design Review Committee | City Engineer Approval | Last Design Update | Mo./Day/Yr. | Mo./Day/Yr. |
|---|---|---|---|---|
| | | | | |

| City Project No. | Zone Map No. | Sheet | Of |
|---|---|---|---|
| 674902 | K-12-Z | 18 | 21 |

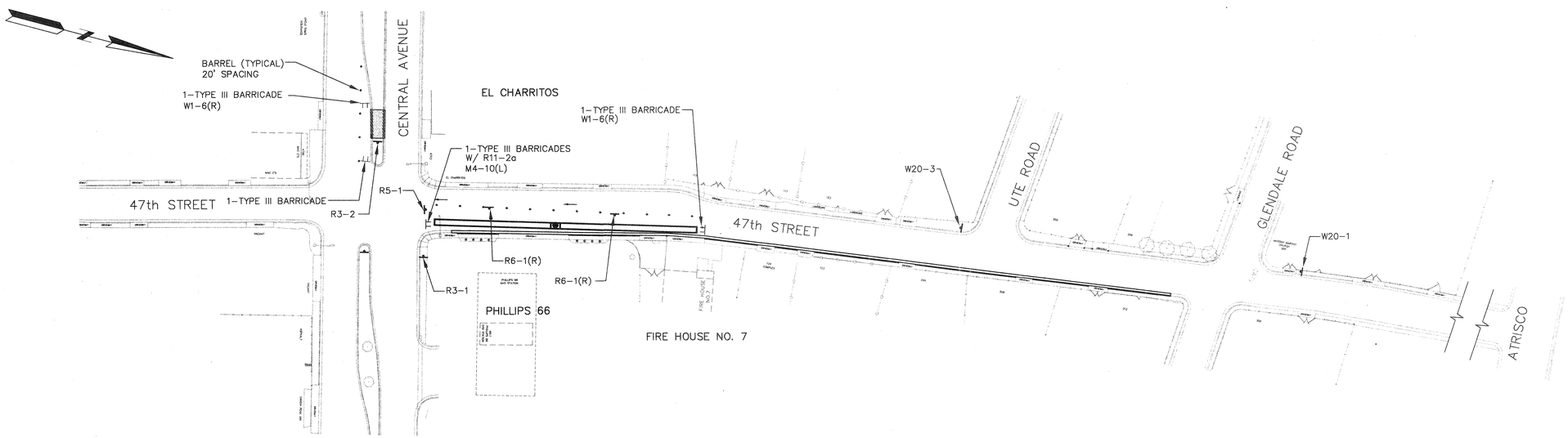


**PLAN**

SCALE: 1" = 60'

*47th STREET (NORTH OF CENTRAL)*

TRAFFIC CONTROL PLAN
PHASE VI-A

GENERAL NOTES FOR PHASE VI-A:

1. CONTRACTOR SHALL MAINTAIN ACCESS TO THE FIRE STATION HOUSE AT ALL TIMES DURING CONSTRUCTION OF THIS PHASE. CONTRACTOR SHALL PROVIDE EMERGENCY VEHICLE ACCESS FROM THE FIRE STATION TO CENTRAL AVENUE AT ALL TIMES DURING CONSTRUCTION.
2. CONTRACTOR SHALL KEEP THE FIRE STATION APPRISED OF WHEN CONSTRUCTION FOR THIS PROJECT BEGINS. CONTRACTOR SHALL NOTIFY THE FIRE STATION 10 DAYS IN ADVANCE OF STARTING CONSTRUCTION ON PHASE VI-A. (CONTACT TERRELL TREAT OR JOE GARCIA AT 836-8740.)
3. CONTRACTOR SHALL CONSTRUCT THE PORTION OF STORM DRAIN PIPE IN FRONT OF THE FIRE STATION (STATIONS 22+71 TO 23+46) BETWEEN 9:00 P.M. AND 4:00 A.M. AT NIGHTTIME TO MAXIMIZE FIRE STATION ACCESS.
4. CONTRACTOR SHALL NOT STORE EQUIPMENT AND PIPE MATERIAL OR PLACE EXCAVATED DIRT WITHIN RIGHT-OF-WAY BETWEEN STATIONS 21+10 AND 23+60 ON 47TH STREET.

CONSTRUCTION PHASE VI-A:

CONSTRUCT STORM DRAIN FROM STA. 21+10 TO STA. 23+46 ON 47TH STREET.

AS BUILT INFORMATION

CONTRACTOR
WORK STAKED BY
INSPECTOR'S ACCEPTANCE BY — DATE
FIELD VERIFICATION BY — DATE
DRAWINGS CORRECTED BY — DATE

MICRO-FILM INFORMATION

RECORDED BY — DATE
RECORDED BY — DATE
RECORDED BY — DATE

BENCH MARKS

ALBUQUERQUE CONTROL SURVEY B.M. NO. 17-J12
LOCATED 2.3 MILES WEST OF DOWNTOWN ALBUQUERQUE SOUTHWEST SIDE OF ATRISCO RD.
THE STATION IS AN ACS 3 1/4" ALUM. CAP RIVETTED TO A PIPE 0.25 FT. ABOVE GROUND AND IS STAMPED "17-J12, 1989".
PLANE COORDINATES: X=367999.51, Y=1489049.30, EL= 4955.128

SURVEY INFORMATION

FIELD NOTES

| NO. | BY | DATE |
|---|---|---|
| 1 | | |
| 2 | | |
| 3 | | |
| 4 | | |
| 5 | | |
| 6 | | |
| 7 | | |

ENGINEER'S SEAL

RICHARD LOVATO
NEW MEXICO
6823
REGISTERED PROFESSIONAL ENGINEER

| NO. | DATE | REVISIONS | BY |
|---|---|---|---|
| 4 | | | |
| 3 | | | |
| 2 | | | |
| 1 | | REMARKS | |

DESIGN

DESIGNED BY: R.L. DATE: JUL. 2003
DRAWN BY: A.B. DATE: JUL. 2003
CHECKED BY: J.A.A. DATE: JUL. 2003

LARKIN GROUP, P.A., INC.
CONSULTING ENGINEERS AND SURVEYORS
8500 MENAUL BLVD. NE A-440
(505) 275-7500

CITY OF ALBUQUERQUE
PUBLIC WORKS DEPARTMENT
ENGINEERING DIVISION

TITLE: CENTRAL – ATRISCO DRAINAGE IMPROVEMENTS
47th STREET
TRAFFIC CONTROL PLAN – PHASE VI-A

| Design Review Committee | City Engineer Approval | Last Design Update | Mo./Day/Yr. | Mo./Day/Yr. |
|---|---|---|---|---|
| | | | | |

| City Project No. | Zone Map No. | Sheet | Of |
|---|---|---|---|
| 674902 | K-12-Z | 19 | 21 |

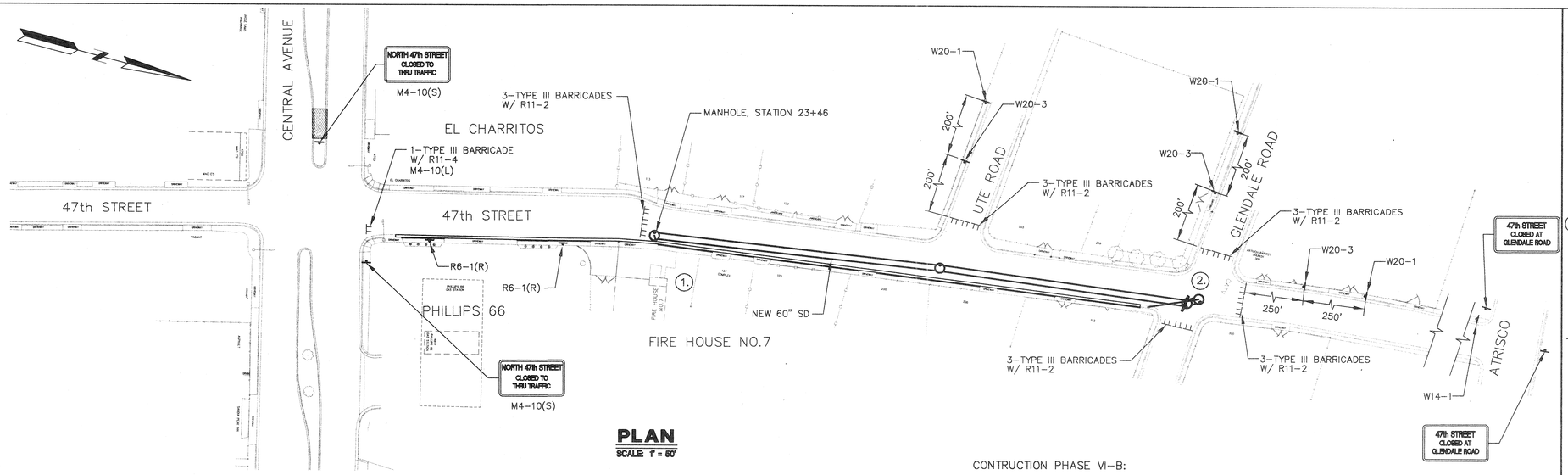


**PLAN**
SCALE: 1" = 50'

*47th STREET (NORTH OF CENTRAL)*
TRAFFIC CONTROL PLAN
PHASE VI-B

CONTRUCTION PHASE VI-B:

CONSTRUCT STORM DRAIN FROM STA. 23+46 TO STA. 28+00 (INCLUDES CONSTRUCTION OF MANHOLE AT STATION 23+46).

CONSTRUCTION PHASE VII:

REHABILITATE EXISTING 48" STORM DRAIN SOUTH OF CENTRAL AVENUE ON 47TH STREET.

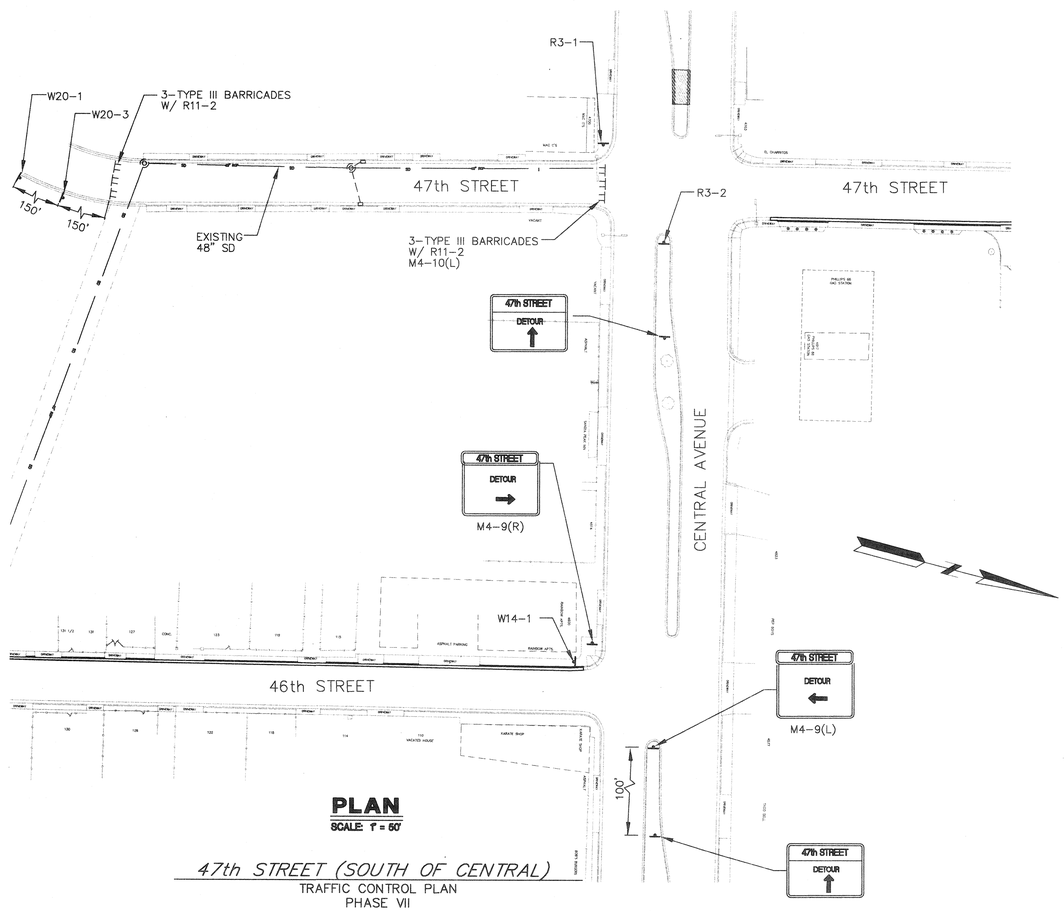


**PLAN**
SCALE: 1" = 50'

*47th STREET (SOUTH OF CENTRAL)*
TRAFFIC CONTROL PLAN
PHASE VII

KEYED NOTES:

1. CONTRACTOR SHALL MAINTAIN ACCESS TO FIRE STATION AT ALL TIMES DURING CONSTRUCTION PHASE VI-B. THE CONTRACTOR SHALL NOTIFY THE FIRE DEPARTMENT 10 DAYS IN ADVANCE OF STARTING CONSTRUCTION OF PHASE VI-B.

   DURING CONSTRUCTION OF THE MANHOLE AT STATION 23+46, MAINTAIN ACCESS TO FIRE STATION FROM STATION 23+32 TO THE SOUTH.

2. MAXIMIZE ACCESS TO GLENDALE ROAD FROM 47TH STREET DURING PHASE VI-B. ONLY CLOSE OFF GLENDALE ROAD WHEN PERFORMING WORK AT THE GLENDALE/47TH ST. INTERSECTION.

GENERAL NOTES FOR PHASE VI-B:

1. CONTRACTOR SHALL NOTIFY THE FIRE STATION 10 DAYS IN ADVANCE OF STARTING CONSTRUCTION ON PHASE VI-B. (CONTACT TERRELL TREAT OR JOE GARCIA AT 836-8740.)
2. CONTRACTOR SHALL NOT STORE EQUIPMENT AND PIPE MATERIAL OR PLACE EXCAVATED DIRT WITHIN RIGHT-OF-WAY BETWEEN STATIONS 21+10 AND 23+60.

AS BUILT INFORMATION

| | |
|---|---|
| CONTRACTOR | |
| WORK STAKED BY | DATE |
| INSPECTOR'S ACCEPTANCE BY FIELD | DATE |
| VERIFICATION BY OWNER | DATE |
| CORRECTIONS CORRECTED BY | DATE |

MICRO-FILM INFORMATION

| | |
|---|---|
| RECORDED BY | DATE |
| RECORDED BY | DATE |
| RECORDED BY | DATE |

BENCH MARKS

ALBUQUERQUE CONTROL SURVEY B.M. NO. 17-J12
LOCATED 2.3 MILES WEST OF DOWNTOWN ALBUQUERQUE SOUTHWEST SIDE OF ATRISCO RD.
THE STATION IS AN ACS 3 1/4" ALUM. CAP RIVETTED TO A PIPE 0.25 FT. ABOVE GROUND AND IS STAMPED "17-J12, 1989".
PLANE COORDINATES: X=367999.51, Y=1489049.30, EL= 4955.128

SURVEY INFORMATION

FIELD NOTES

| NO. | BY | DATE |
|---|---|---|
| 1 | | |
| 2 | | |
| 3 | | |
| 4 | | |
| 5 | | |
| 6 | | |
| 7 | | |

ENGINEER'S SEAL

RICHARD LOVATO NEW MEXICO 6823 REGISTERED PROFESSIONAL ENGINEER

REVISIONS

| NO. | DATE | REMARKS | BY |
|---|---|---|---|
| 1 | | | |
| 2 | | | |
| 3 | | | |
| 4 | | | |

DESIGN

DESIGNED BY: R.L. DATE: JUL. 2003
DRAWN BY: A.B. DATE: JUL. 2003
CHECKED BY: J.A.A. DATE: JUL. 2003

LARKIN GROUP, P.A., INC.
CONSULTING ENGINEERS AND SURVEYORS
8500 MENAUL BLVD. NE A-440
(505) 275-7500

CITY OF ALBUQUERQUE
PUBLIC WORKS DEPARTMENT
ENGINEERING DIVISION

TITLE: CENTRAL - ATRISCO DRAINAGE IMPROVEMENTS
47th STREET
TRAFFIC CONTROL PLAN - PHASE VI-B TO PHASE VIII

| Design Review Committee | City Engineer Approval | Last Design Update | Mo./Day/Yr. | Mo./Day/Yr. |
|---|---|---|---|---|
| | | | | |

| City Project No. | Zone Map No. | Sheet | Of |
|---|---|---|---|
| 674902 | K-12-Z | 20 | 21 |


SCALE: 1" = 100'-0"

## NOTES:

For Waterline Relocation at Central Avenue and 47th Street, Close Off the Following Valves:

- Valve 21 at Atrisco Well #9.
- Valve B382 at Atrisco Well #4.
- Valve 627 at Atrisco Well #1.

## KEYED NOTES

1. 16" Waterline Relocation at Central Avenue 47th Street.

## NOTE

Any water service lines that need to be replaced shall be replaced with copper tubing and no splices from meter to main. As per C.O.A. Std Dwg. 2362

Any existing utilities exposed during construction shall be supported and protected during construction. This shall be considered incidental to project construction and no separate payment will be made.


LARKIN GROUP, INC.
CONSULTING ENGINEERS AND SURVEYORS
8500 MENAUL BLVD. NE S-440
(505) 275-7500


AS BUILT INFORMATION

| | |
|---|---|
| CONTRACTOR | |
| WORK STAKED BY | DATE |
| INSPECTOR'S FIELD TOLERANCE BY | DATE |
| VERIFICATION OF FIELD TOLERANCE BY | DATE |
| DRAWING CORRECTED BY | DATE |

MICRO-FILM INFORMATION

| | |
|---|---|
| RECORDED BY | DATE |
| RECORDED BY | DATE |
| RECORDED BY | DATE |

BENCH MARKS

ALBUQUERQUE CONTROL SURVEY B.M. NO. 17-J12
LOCATED 2.3 MILES WEST OF DOWNTOWN ALBUQUERQUE SOUTHWEST SIDE OF ATRISCO RD.
THE STATION IS AN ACS 3 1/4" ALUM. CAP RIVETTED TO A PIPE 0.25 FT. ABOVE GROUND AND IS STAMPED "17-J12, 1989".
PLANE COORDINATES: X=367999.51, Y=1489049.30, EL= 4955.128

SURVEY INFORMATION

FIELD NOTES

| NO. | BY | DATE |
|---|---|---|
| 1 | | |
| 2 | | |
| 3 | | |
| 4 | | |
| 5 | | |
| 6 | | |
| 7 | | |

ENGINEER'S SEAL

RICHARD LOVATO
NEW MEXICO
6823
REGISTERED PROFESSIONAL ENGINEER

| NO. | DATE | REVISIONS | BY |
|---|---|---|---|
| 1 | | | |
| 2 | | | |
| 3 | | | |
| 4 | | | |

REMARKS

DESIGN

DESIGNED BY: R.L. DATE: JUL. 2003
DRAWN BY: P.R. DATE: JUL. 2003
CHECKED BY: J.A.A. DATE: JUL. 2003

CITY OF ALBUQUERQUE
PUBLIC WORKS DEPARTMENT
ENGINEERING DIVISION

TITLE: CENTRAL – ATRISCO DRAINAGE IMPROVEMENTS
WATER SHUT-OFF PLAN

| Design Review Committee | City Engineer Approval | Last Design Update | Mo./Day/Yr. | Mo./Day/Yr. |
|---|---|---|---|---|
| | | | | |

| City Project No. | Zone Map No. | Sheet | Of |
|---|---|---|---|
| 674902 | K-12-Z | 21 | 21 |