ALBUQUERQUE METROPOLITAN ARROYO FLOOD CONTROL AUTHORITY

CONSTRUCTION PLANS

FOR

AMAFCA

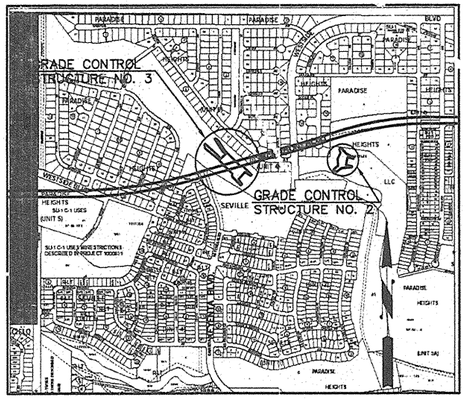

ZONE ATLAS A-10-Z

BASE BID:

MCMAHON BLVD. EXTENSION/BRIDGE AT ARROYO DE LAS CALABACILLAS

BASE ALTERNATE 1:

ELLISION IMPROVEMENTS

BASE ALTERNATE 2:

ALBUQUERQUE PUBLIC SCHOOLS IMPROVEMENTS

ALBUQUERQUE, NEW MEXICO
COA PROJECT NO. 681602

CERTIFICATION:
THESE DRAWINGS HAVE BEEN REVISED IN ACCORDANCE WITH THE INFORMATION FURNISHED BY DAVID MONTOYA CONSTRUCTION, INC. TO REFLECT THE CONSTRUCTION AS ACTUALLY ACCOMPLISHED.

REVISED SHEETS:
3-2, 3-5, 3-5, 3-6, 3-7, 3-8, 3-8a, 3-12, 3-13, 3-14, 3-15, 3-16, 3-17, 3-18, 3-19, 3-19a, 5-3, 5-11, 5-11a, 5-15, 5-16, 5-21, 5-24

SAMIR GANDHI 15020 REGISTERED PROFESSIONAL ENGINEER 11-30-05

WILSON & COMPANY, INC.
RECORD DRAWINGS

WILSON & COMPANY
4900 LANG AVE., NE
SUITE 100
ALBUQUERQUE, NEW MEXICO 87109

REV	SHEETS	CITY ENGINEER	DATE	USER DEPT.	DATE	USER DEPT.	DATE

ENGINEERS STAMP & SIGNATURE: THOMAS E. ABERNATHY, NEW MEXICO, 15781, REGISTERED PROFESSIONAL ENGINEER, 11/14/05

APPROVALS	ENGINEER	DATE
DRC Chairman		11-17-05
Transportation		11/16/05
Water/Wastewater	N/A	
Hydrology	Bradley J. Bingham	11/17/05
C.I.P.		
Const. Coord.		
NMUI		
AMAFCA	Jordan Kelley	11/15/05

APPROVED FOR CONSTRUCTION

City Engineer — Date 11-17-05

City Project No.: COA681602

SHEET NO.: 1-1

X:\Public\PROJECTS\X2F-UU1202\1\2012GHCOV.dwg 11/14/2005 7:44:52 AM MST

INDEX

INDEX CONTINUED

LEGEND

EXISTING		PROPOSED	
SAS	SANITARY SEWER	SAS	SANITARY SEWER
WL	WATER LINE	WL	WATER LINE
G	GAS LINE	G	GAS LINE
SD	STORM DRAIN	SD	STORM DRAIN
E	OVERHEAD ELECTRIC LINE	E	OVERHEAD ELECTRIC LINE
UE	UNDERGROUND ELECTRIC LINE	UE	UNDERGROUND ELECTRIC LINE
	POWER POLE		ELECTRIC CONDUIT
	CURB & GUTTER		WHEELCHAIR RAMP
	DROP INLET		CROWN REDUCTION
DI	WATER VALVE		SIDEWALK
	FIRE HYDRANT	FOC EOP	FACE OF CURB EDGE OF PAVEMENT
E	SAS SERVICE W/CAP		CENTERLINE
MH	MANHOLE		MANHOLE
CP	COMMUNICATIONS PEDESTAL		WATER VALVE
SIG	TRAFFIC SIGNAL		SINGLE WATER METER
	ELECTRIC BOX		DOUBLE WATER METER
	LIGHT POLE	E	SAS SERVICE W/CAP
	TREE/SHRUB		STORM INLET
5285	INDEX CONTOUR		FIRE HYDRANT
	INTERMEDIATE CONTOUR		LIGHT POLE
	SIGN		
	POST		
	FENCE		
	GUARDRAIL		
	RETAINING WALL		

FUTURE LINE TYPE

ESTIMATED QUANTITIES

COA ITEM NO.		UNIT	CONSTRUCTION ENGINEERING	BRIDGE	DRAINAGE	REIMBURSABLE ITEMS	TOTAL
6.050	CONSTRUCTION MOBILIZATION	LS	1.00				1.00
5.060	CONSTRUCTION DEMOBILIZATION	LS	1.00				1.00
6.010	CONSTRUCTION PROJECT SIGN	EA	2.00				2.00
30.020	NPDES PERMITTING	LS	1.00				1.00
19.010	TRAFFIC CONTROL & BARRICADING	LS	1.00				1.00
201.010	SITE CLEARING & GRUBBING, COMPLETE	AC	6.50				6.50
205.010	FILL, BORROW, HAUL & COMP	CY	66,920.00				66,920.00
1600.001	VIBRATION MONITORING AND VIDEO TAPING, COMPL.	LS	1.00				1.00
102.010	REINFORCING BARS, GRADE 60	LB		69,220.00			69,220.00
103.010	EPOXY COATED REINFORCING BARS, GRADE 60	LB		247,132.00			247,132.00
510.010	SUPERSTRUCTURE CONCRETE	CY		1,077.00			1,077.00
510.020	SUBSTRUCTURE CONCRETE CLASS A	CY		610.00			610.00
510.030	32" CONCRETE BARRIER	LF		469.20			469.20
510.040	CONCRETE SLOPE PAVING	SY		1,407.00			1,407.00
512.010	PRESTRESSED CONCRETE GIRDERS, BT-63	LF		2,432.00			2,432.00
520.010	STRUCTURAL STEEL FOR CONCRETE BRIDGES	LB		20,548.00			20,548.00
540.040	METAL PEDESTRIAN RAILING	LF		469.20			469.20
555.010	STRUCTURAL EXCAVATION AND BACKFILL FOR BRIDGES	CY		954.00			954.00
561.010	DRILLED SHAFT INTEGRITY TESTING	EA		6.00			6.00
562.010	DRILLED SHAFTS, 30" DIAMETER	LF		1,000.00			1,000.00
562.011	DRILLED SHAFTS, 72" DIAMETER	LF		700.00			700.00
581.010	ELASTOMERIC EXPANSION JOINT SEALS	LF		228.00			228.00
585.010	SEALED EXPANSION JOINTS	LF		681.00			681.00
302.010	AGGREGATE BASE COURSE, CRUSHED, 6" AT 95% COMPACTION, cip. SD 2408	SY			1,120.00		1,120.00
601.010	EXCAVATION & DISPOSAL OF UNCLASSIFIED EXCESS MATERIAL OR CHANNELS, COMPL.	CY			17,509.00		17,509.00
602.075	SOIL CEMENT, CIP	CY			11,485.00		11,485.00
602.076	PORTLAND CEMENT USED IN SOIL CEMENT, CIP	TON			77.50		77.50
910.039	102" RCP, CLASS III	LF				250.00	250.00
920.220	MH, 8' DIA., C or E, 10'-14' DEEP	EA				1.00	1.00
920.230	MH, 8' DIA., EXTRA DEPTH, 14' - 18' DEEP	VF				1.60	1.60

AMAFCA NOTES:

1. AMAFCA FIELD ENGINEER SHALL BE NOTIFIED 48-HOURS PRIOR TO ANY WORK WITHIN AMAFCA R/W. TEL: 505-884-2215 (KURT WAGENER)
2. NO WORK WILL BE PERFORMED WITHIN THE AMAFCA R/W BETWEEN MAY 15 AND OCTOBER 15 WITHOUT WRITTEN PERMISSION FROM AMAFCA.
3. ALL SUBGRADE, BACKFILL, AND EMBANKMENT SHALL BE COMPACTED TO 95% (MODIFIED PROCTOR) WITHIN AMAFCA R/W. TESTING REPORTS SHALL BE PROVIDED TO AMAFCA FIELD ENGINEER.
4. AMAFCA FIELD ENGINEER WILL BE NOTIFIED 48-HOURS PRIOR TO FINAL INSPECTION OF FACILITIES WITHIN THE AMAFCA R/W.
5. ALL DISTURBED GROUND AREA SHALL BE REVEGATATED IN ACCORDANCE WITH THE CITY OF ALBUQUERQUE STANDARD SPECIFICATIONS FOR PUBLIC WORKS CONSTRUCTION, SECTION 1012 NATIVE GRASS SEEDING, AS CURRENTLY UPDATED.

APPROVED FOR CONSTRUCTION WITHIN AMAFCA RIGHT-OF-WAY: John Picelly 11-15-05
(FOR AMAFCA)

AS-BUILT INFORMATION
CONTRACTOR David Montoya Const. Inc.
WORK STAKED BY Billingsley Eng. DATE
INSPECTOR'S ACCEPTANCE BY Cook DATE
FIELD VERIFICATION BY Cook/Nol DATE
DRAWINGS CORRECTED BY NCL DATE 3/07
MICRO-FILM INFORMATION
RECORDED BY DATE
NO.

BENCH MARKS
THE STA. IS A USGS TABLET STAMPED 'BLACK-2 1977' SET FLUSH W/ THE GROUND. THE STA. IS LOCATED 8.5 MI. N.W. OF DOWNTOWN ALBUQ. TO REACH THE STA. FROM THE INTX OF COORS/I-40 GO N. ON COORS 5.8 MI. TO PARADISE BLVD. TURN LEFT GO W. ON PARADISE BLVD. 1.1 MI. TO GOLF COURSE RD. TURN RIGHT GO N. ON GOLF COURSE RD. 1.3 MI. TO McMAHON BLVD. THE STA. IS ON THE LEFT.
N 1530241.52, E 372920.43
ELEVATION = 5213.926 FT. (2ND ORDER) (NGVD29)

SURVEY INFORMATION
FIELD NOTES
NO. BY DATE

ENGINEER'S SEAL
JAMES E. ARCHULETA NEW MEXICO 15781 11/14/05 REGISTERED PROFESSIONAL ENGINEER

NO.	DATE	REMARKS	BY
		REVISIONS	

WILSON & COMPANY, ENGINEERS & ARCHITECTS
DESIGNED BY EEA DATE NOV 2005
DRAWN BY ELO DATE NOV 2005
CHECKED BY EEA DATE NOV 2005

CITY OF ALBUQUERQUE
DEPARTMENT OF MUNICIPAL DEVELOPMENT
TRANSPORTATION DIVISION

McMAHON BLVD. EXTENSION-CALABACILLAS BRIDGE
INDEX OF SHEETS / LEGEND & ESTIMATED QUANTITIES

Design Review Committee: APPROVED
City Engineer Approval: APPROVED
Last Design Update | Mo./Day/Yr. | Mo./Day/Yr.

City Project No. COA 681602 | Zone Map No. A-10-Z | Sheet 1-2 Of

WILSON & COMPANY

GENERAL NOTES

1. CITY OF ALBUQUERQUE STANDARD SPECIFICATIONS FOR PUBLIC WORKS CONSTRUCTION REV. 7, SHALL GOVERN CONSTRUCTION OF THIS PROJECT. ALL WORK ON THIS PROJECT SHALL BE PERFORMED IN ACCORDANCE WITH APPLICABLE FEDERAL, STATE, AND LOCAL LAWS, RULES, AND REGULATIONS CONCERNING CONSTRUCTION SAFETY AND HEALTH.
2. THE CONTRACTOR SHALL MAINTAIN AN UP-TO-DATE SET OF AS-BUILT PLANS FOR THE PROJECT. THESE SHALL BE CURRENT WITHIN TWO WEEKS AT ALL TIMES AND SHALL BE SUBJECT TO REVIEW BY THE PROJECT ENGINEER THROUGHOUT THE PROJECT. THE FINAL AS-BUILT PLANS AND ONE COPY SHALL BE SUBMITTED TO THE PROJECT ENGINEER PRIOR TO FINAL PAYMENT.
3. ELEVATIONS ARE SHOWN IN FEET ABOVE MEAN SEA LEVEL DATUM.
4. ALL STATIONING REFERS TO CENTERLINE OF CONSTRUCTION AND IS THE MEASURED HORIZONTAL DISTANCE. LEFT AND RIGHT OF CENTERLINE ARE LOOKING IN THE DIRECTION OF INCREASING STATIONS. STATIONING OF CHANNEL PROCEEDS UPSTREAM AGAINST THE DIRECTION OF FLOW.
5. REINFORCING BARS SHALL BE CONTINUOUS OR SPLICED FROM SLABS AND WALLS INTO ADJACENT SLABS AND WALLS.
6. BAR SPLICES SHALL BE CLASS C IN ACCORDANCE WITH ACT STANDARD 318-83, CHAPTER 12, UNLESS OTHERWISE SHOWN.
7. WHEN COORDINATES ARE SHOWN, HEREIN (N, E) THEY REFER TO A COORDINATE SYSTEM ESTABLISHED FOR THIS PROJECT, EXCEPT WHEN SPECIFICALLY REFERRED TO AS STATE GRID. COORDINATES ARE BASED ON TRUE GROUND DISTANCES AND STATE GRID BEARINGS FROM THE STATE GRID COORDINATE SYSTEM.
8. SLOPE LIMIT LINES SHOWN ON THE PLANS DEFINE "LIMITS OF WORK" FOR THIS PROJECT.
9. WATERING, AS REQUIRED FOR CONSTRUCTION AND DUST CONTROL, SHALL BE CONSIDERED INCIDENTAL TO CONSTRUCTION AND NO MEASUREMENT OR PAYMENT SHALL BE MADE THEREFORE. CONSTRUCTION AREAS SHALL BE WATERED FOR DUST POLLUTION ABATEMENT AS DIRECTED BY THE ENGINEER. THE CONTRACTOR SHALL BE RESPONSIBLE FOR LOCATING AND SUPPLYING WATER AS REQUIRED.
10. THE CONTRACTOR WILL BE RESPONSIBLE TO REPLACE AT HIS OWN EXPENSE ANY AND ALL PROPERTY CORNERS DESTROYED IN THE PROCESS OF CONSTRUCTION. ALL PROPERTY CORNERS MUST BE SET BY A NEW MEXICO REGISTERED LAND SURVEYOR IN GOOD STANDING. DOCUMENTATION SHALL BE DELIVERED TO AMAFCA PRE-CONSTRUCTION MEETING.
11. THE CONTRACTOR SHALL CONFINE HIS OPERATIONS TO THE LIMITS OF WORK FOR THE PROJECT AND WILL BE HELD RESPONSIBLE FOR ANY AGREEMENTS NECESSARY OR DAMAGE BY HIS OPERATION TO PUBLIC OR PRIVATE PROPERTY INCLUDING UTILITIES. CONTRACTOR'S YARD AND ANY OTHER DISTURBED AREAS FOR CONTRACTORS EXCLUSIVE USE SHALL BE TREATED WITH CLASS A SEEDING. NO SEPARATE MEASUREMENT OR PAYMENT WILL BE MADE FOR THIS WORK.
12. THE CONTRACTOR SHALL NOTIFY ALL UTILITY COMPANIES WHEN WORKING NEAR THEIR SYSTEMS. TWO DAYS PRIOR TO ANY EXCAVATION, CONTRACTOR MUST CONTACT LINE LOCATING SERVICE, 260-1990, FOR LOCATION OF EXISTING UTILITIES.
13. THE CONTRACTOR SHALL INCLUDE IN HIS CONSTRUCTION SEQUENCE, PROVISIONS WHICH WILL ALLOW FOR THE SAFE PASSAGE OF WATER FROM ARROYOS AND DITCHES THROUGH THE PROJECT SITE WITHOUT DAMAGE TO COMPLETED FACILITIES OR ADJACENT PRIVATE PROPERTY.
14. UTILITY WORK REQUIRED BY THE CONSTRUCTION OF THIS PROJECT IS TO BE COORDINATED BY THE CONTRACTOR DURING CONSTRUCTION. NO ADDITIONAL COMPENSATION WILL BE ALLOWED FOR DELAYS OR INCONVENIENCES CAUSED BY UTILITY COMPANY WORK CREWS. THE CONTRACTOR MAY BE REQUIRED TO RESCHEDULE HIS ACTIVITIES TO ALLOW UTILITY CREWS TO PERFORM THEIR REQUIRED WORK.
15. EXISTING UTILITIES SHOWN ON THESE PLANS ARE FOR INFORMATION ONLY. LOCATIONS ARE BASED ON AS-BUILT INFORMATION. CONTRACTOR SHALL LOCATE AND POT-HOLE ALL UTILITIES PRIOR TO CONSTRUCTION.
16. A DISPOSAL SITE FOR ALL ASPHALTIC PAVING, CONCRETE PAVING, ETC. SHALL BE OBTAINED BY THE CONTRACTOR, AND APPROVED BY THE PROJECT ENGINEER IN COMPLIANCE WITH APPLICABLE REGULATIONS. ALL COSTS INCURRED IN OBTAINING A DISPOSAL SITE AND HAUL THERETO SHALL BE CONSIDERED INCIDENTAL TO THE OTHER ITEMS.
17. WHERE TRADE NAME ITEMS ARE CALLED OUT ON THE PLANS ALTERNATE EQUAL PRODUCTS OR MATERIALS MAY BE SUBMITTED TO THE PROJECT ENGINEER FOR APPROVAL.
18. FILL MATERIALS FROM EXCAVATION, OVER EXCAVATION, OR BORROW WHICH REQUIRED MORE THAN ONE HANDLING PRIOR TO FINAL PLACEMENT, INCLUDING STOCKPILING AND BLENDING TO MEET GRADATION REQUIREMENTS, OR STOCKPILING FOR LATER DISPOSAL WILL BE CONSIDERED INCIDENTAL TO THE CONTRACT UNIT PRICE FOR EXCAVATION. NO SEPARATE PAYMENT SHALL BE MADE FOR BLENDING OR MULTIPLE HANDLING AND FINAL PAYMENT SHALL BE MADE ON THE BASIS OF QUANTITIES REMOVED FROM THE ORIGINAL LOCATION.
19. PAVING AND ACCESS ROADWAY GRADES SHALL BE +0.05 FOOT FROM SHOWN PLAN ELEVATIONS.
20. THE CONTRACTOR SHALL BE RESPONSIBLE FOR OBTAINING ALL PERMITS AND APPROVALS NECESSARY FOR THE CONSTRUCTION OF THESE FACILITIES.
21. THE COST FOR REQUIRED CONSTRUCTION DUST AND EROSION CONTROL MEASURES SHALL BE INCIDENTAL TO THE PROJECT COST. THE CONTRACTOR IS RESPONSIBLE FOR PROVIDING DUST AND EROSION CONTROL AS OFTEN AS REQUIRED BY THE PROJECT ENGINEER. FAILURE TO COMPLY WILL RESULT IN A PENALTY OF $100/DAY AND THE COST OF AN INDEPENDENT CONTRACTOR TO PERFORM THE DUTIES.
22. ALL SCARIFYING, EXCAVATION, COMPACTION, AND REPLATTED SOILS WORK SHALL BE DONE UNDER SUPERVISION OF THE PROJECT ENGINEER AND IN ACCORDANCE WITH THE SITE SOILS REPORT AS PROVIDED BY THE OWNER.
23. EXCEPT AS PROVIDED HEREIN, GRADING SHALL BE PERFORMED TO THE ELEVATIONS, AND IN ACCORDANCE WITH THE CROSS SECTIONS SHOWN IN THE PLANS.
24. ALL STORM WATER DISCHARGES INTRODUCED INTO THE ARROYO WILL MEET THE REQUIREMENTS OF THE REGULATIONS OF THE NATIONAL POLLUTANT DISCHARGE ELIMINATION SYSTEM (NPDES) AS WELL AS APPLICABLE STATE AND LOCAL REGULATIONS.
25. IF SUBSURFACE CULTURAL MATERIALS ARE ENCOUNTERED DURING CONSTRUCTION, WORK SHALL CEASE UNTIL THE MATERIALS CAN BE EVALUATED BY THE STATE PRESERVATION OFFICER.
26. TO AVOID SOIL AND WATER POLLUTION IMPACTS DURING CONSTRUCTION, ANY POLLUTING MATERIALS GENERATED WILL NOT BE DUMPED IN THE PROJECT AREA BUT WILL BE DISPOSED OF IN ACCORDANCE WITH APPROPRIATE GUIDELINES.
27. MATERIAL FOR SOIL CEMENT WILL BE EXCAVATED FROM WITHIN THE JOB SITE.
28. THE CONTRACTOR SHALL SUBMIT A SCHEDULE FOR APPROVAL BY THE PROJECT ENGINEER AND SHALL BE KEPT CURRENT WITHIN TWO WEEKS.
29. ALL DIRT STAYS ONSITE. ALL EARTHWORK WILL BE PAID FOR UNDER 1 ITEM, "EXCAVATION AND FILL OR STOCKPILE FOR SOIL CEMENT OR UNCOMPACTED FILL IN ARROYO BOTTOM." THIS ITEM WILL COVER EXCAVATION TO THE NEAT LINE AS SHOWN ON THE PLANS. COMPACTED AND UNCOMPACTED BACKFILL.
30. THE SOIL CEMENT STEPS SHALL BE WELL COMPACTED UNIFORM AND CONSOLIDATED TRAVERSABLE STEPS.
31. CONTRACTOR SHALL NOTIFY THE ENGINEER NOT LESS THAN SEVEN (7) WORKING DAYS PRIOR TO STARTING WORK IN ORDER THAT THE CITY SURVEYOR MAY TAKE NECESSARY MEASURE TO ENSURE THE PRESERVATION OF SURVEY MONUMENTS. CONTRACTOR SHALL NOT DISTURB PERMANENT SURVEY MONUMENTS WITHOUT THE CONSENT OF THE CITY SURVEYOR AND SHALL NOTIFY THE CITY SURVEYOR AND BEAR THE EXPENSE OF REPLACING ANY THAT MAY BE DISTURBED WITHOUT PERMISSION. REPLACEMENT SHALL BE DONE ONLY BY THE CITY SURVEYOR.
32. NO WORK IMPACTING TRAFFIC, INCLUDING WORK ON OPEN SECTIONS OF McMAHON BLVD. & ELLISON BLVD, SHALL OCCUR BETWEEN NOVEMBER 25th, 2005 TO JANUARY 03, 2006.

SECTION 1012
NATIVE GRASS SEEDING

1012.1 GENERAL:

Work under this section consists of preparing all area indicated on the plans for native grass seeding, furnishing and installing all seed, fertilizer and soil amendments as specified herein and on the plans, or as authorized by the ENGINEER.

1012.2 REFERENCES:

1012.2.1 This Publication:

Section 1011 Turf Grass Seeding

1012.3 WORK AREA/TIMING:

1012.3.1 Areas that are disturbed by the CONTRACTOR that are outside the construction limits shown on the plans or authorized by the ENGINEER shall be seeded with native grasses as specified herein at no cost to the OWNER.

1012.3.2 The seeding of disturbed areas shall commence upon completion of the other work in the area.

1012.4 MATERIALS:

1012.4.1 Native Seed: The native seed species and rate of application shall be as shown below and shall be used based on the type of soil or as specified on the plans or in the Supplemental Technical Specification.

1012.4.1.1 Sandy Soils: (mainly west side areas). Seed rate is given in pounds of pure live seed (P.L.S.) per acre.

Variety/ Common Name	Genus/ Species	P.L.S/Acre
"Paloma" Indian rice grass	Oryzopsis hymenoides	5.0
"Viva" Galleta grass	Hilaria jamesii	1.0
"Ring-" Side oats grama "Hatchita" Blue grama	Bouteloua curtipendula	3.0
	Bouteloua gracilis	1.0
Sand dropseed (NM Region)	Sporobolus cryptandrus	1.0
Fourwing saltbush (NM Region)	Atriplex canescens (de-winged)	1.0
Total rate		12.0 lbs/ acre

1012.4.1.2 Clay, Clay Loam, and Sandy gravelly clay loam soils: (mainly valley and east side areas). Seed rate is given in pounds of pure live seed (P.L.S.) per acre.

Common Name	Genus-species	PLS/Acre
"Paloma" Indian rice grass	Oryzopsis hymenoides	2.0
"Viva" Galleta grass	Hilaria jamesii	2.0
"Niner" Sideoats grama	Bouteloua curtipendula	2.0
"Hatchita" Blue grama	Bouteloua gracilis	3.0
Sand dropseed (NM Region)	Sporobolus cryptandrus	1.0
Fourwing saltbush	Atriplex canescens (de-winged)	1.0
Total rate		11.0 lbs/ac

NOTE: If the area to be seeded is along a recreational trail of any type the seed mixes for either type of soil listed above shall exclude the one (1) pound per acre of Four-wing saltbush. The seeding rate shall be lowered by one (1) pound per acre.

1012.4.1.3 Seeds may be pre-mixed by a seed dealer. Each bag of seed shall be sealed and labeled by the seed dealer in accordance with Federal Seed Laws and New Mexico Department of Agriculture Labeling Laws. This includes: variety, kind of seed, lot number, purity, germination, percent crop, percent inert, percent weed (including noxious weeds), origin, test data and net weight. Federal Seed Laws require that analysis shall be no older than 5 months for seed shipped interstate and no older than 9 months for seed shipped intra-state. The ENGINEER shall receive all labels from all bags of seed used for verification.

1012.4.2 Fertilizer and Soil Amendments: Unless otherwise specified on the plans or in the Supplemental Technical Specification, no fertilizer or other soil amendments are required on areas specified to receive native seeding. If fertilizer and/or other soil amendments are required they shall be in accordance with Section 1011 of these specifications.

1012.4.3 MULCH:

1012.4.3.1 Hay Mulch: Perennial native or introduced grasses of fine-stemmed varieties shall be used unless otherwise specified on the plans. At least 65 percent of the herbage by weight of each bale of hay shall be 10 inches in length or longer. Hay with noxious seed or plants will not be acceptable. Rotted, brittle, or moldy hay will not be acceptable. Marsh grass or prairie hay composed of native grass or species to be seeded will be acceptable. Tall wheat grass, intermediate wheat grass, switch grass, or orchard hay will be acceptable if cut prior to seed formation. Marsh grass hay shall be composed of mid and tall native, usually tough and wiry grass and grass-like plants found in the lowland areas within the Rocky Mountain region. Hay shall be properly cured prior to use. Hay which is brittle, short fibered or improperly cured is not acceptable.

1012.4.3.2 Straw Mulch: Small grain such as wheat, barley, rye, or oats will not be allowed except by prior approval of the ENGINEER and with the concurrence of the Air Division, Environmental Health Department. Alfalfa or the stalks of corn, maize or sorghum is not acceptable. Material which is brittle, shorter than 10 inches or which breaks or fragments during the crimping operation will not be acceptable.

1012.4.3.3 Gravel Mulch: Gravel mulch shall be crushed or screened gravel 3/4" to 1" maximum size with a minimum of one angular face unless otherwise specified.

1012.4.3.4 Erosion Control Matts, Fabric or Blankets: The type of erosion control mats, fabric or blankets used shall be as specified or allowed on the plans or in the Supplemental Technical Specifications.

1012.5 SEED BED PREPARATION:

1012.5.1 General:

1012.5.1.1 Prior to the starting of any seed bed preparation the final grades of all earth work shall be inspected and approved by the ENGINEER.

1012.5.1.2 No preparation shall be performed when the surface is wet or muddy or when the soil moisture content is such that the soil is not fully loosened by the discing operation.

1012.5.1.3 The extent of seed bed preparation shall not exceed the area on which seeding, mulching and crimping operations can be completed prior to crusting or wind or water erosion of the prepared surface - if erosion, crusting or re-compaction occurs, the affected area shall be re-worked beginning with seed bed preparation. Depth of preparation must be approved by the ENGINEER prior to the seeding and mulching operations.

1012.5.2 Mechanical Preparation: The seed bed shall be loosened to a minimum depth of 6" (six inches) by means of disc or harrow. Area of heavy or compacted soil may require additional preparation such as chiseling or ripping if discing alone does not result in preparation to the full minimum depth of 6". The soil shall be worked to a smooth surface free of clods, stones 4" and larger or any other debris or foreign material that could interfere with seeding or crimping equipment operations.

1012.5.3 Hand Preparation: Areas which cannot be prepared with mechanized equipment because of small size irregular shape or slope angle may be prepared to a minimum depth of 2" using hand tools or a rototiller. Any such areas will be specified on the plans.

1012.6 SEEDING:

1012.6.1 General:

1012.6.1.1 Seeding shall not start until the seed bed preparation has been inspected and approved by the ENGINEER.

1012.6.1.2 No more area may be seeded than can be covered with mulch and crimped, or covered with gravel mulch or erosion control mats by the end of the work day. No seeding operations may be conducted when steady wind speed exceeds 10 miles per hour. If winds exceed 10 mph while seeding is underway, seeding operations will be halted and any areas seeded to that point completed.

1012.6.2 Seed Application:

1012.6.2.1 Drill Seeding: Drill seeding is required unless otherwise specified on the plans or in the Supplemental Technical Specifications. Seed shall be applied with a "rangeland" type seed drill equipped with packer wheels. Seed shall be drilled to a maximum depth of 1/2" unless otherwise specified. Direction of seeding shall be across slopes and on the contour whenever possible.

1012.6.2.2 Broadcast Seeding: Seed may be applied using the broadcast method when size, irregular shape or slope angle exceeding 3:1 prevents the use of a seed drill. Seed may be broadcast by hand or by means of a mechanical spader provided that the seed is evenly distributed over the seeding area. Areas of broadcast seeding will be hand raked to cover seed. Areas which are broadcast seeded shall be seeded at rate which is double that used for drill seeding.

1012.6.2.3 Seeding With Gravel Mulch: Areas to receive gravel mulch will be seeded at the broadcast seed rate with 1/2 the seed applied prior to application of gravel and 1/2 the seed applied on the surface of the gravel. Water shall be applied in quantity sufficient to wash seed from the surface and into the gravel.

1012.6.2.4 Hydro Seeding: Hydro seeding will not be allowed on areas of non-irrigated native grass seeding unless specified on the plans or in the Supplemental Technical Specifications or authorized by the ENGINEER.

1012.7 MULCHING:

1012.7.1 General:

1012.7.1.1 All seeded areas shall be mulched unless otherwise specified on the plans or in the Supplemental Technical Specifications.

1012.7.1.2 On seeded areas that are level or have slopes 3:1 or less, any of the four (4) types of mulching or erosion control specified herein may be used. On seeded areas that have slopes steeper than 3:1 only gravel mulch or erosion control materials may be used as specified on the plans and in the Supplemental Technical Specifications.

1012.7.2 Hay Mulch: Hay mulch shall be applied at a minimum rate of 1.5 tons per acre of air dry hay.

1012.7.3 Straw Mulch: Straw mulch shall be applied at a minimum rate of 2.5 tons per acre of air dry straw.

1012.7.4 Crimping: Hay and/or Straw mulch shall be crimped into the soil. The mulch shall be spread uniformly over the area either by hand or with a mechanical mulch spreader. When spread by hand, the bales of mulch shall be torn apart and fluffed before spreading. Mulching will not be permitted when wind velocity exceeds 15 miles per hour. The mulch shall be wetted down and allowed to soften for 15 to 20 minutes prior to crimping. A heavy disc such as a mulch-tiller, with flat serrated discs at least 1/4 inch in thickness, having dull edges and the disc spaced 6 inches to 8 inches apart shall be used to crimp (or anchor) the mulch into the soil to a minimum depth of 2 inches or as specified on the plans or the Supplemental Technical Specifications. The discs shall be of sufficient diameter to prevent the frame of the equipment from dragging the mulch.

The crimping operations shall be across the slope where practical but not be parallel to prevailing Westerly winds (270 degrees magnetic). Crimping shall be in a general north-south direction or by tight interlocking "S" curves to avoid straight east-west crimp lines.

If small grain straw mulch is used it shall be crimped in two (2) directions in a cross-hatch pattern.

1012.7.5 Gravel Mulch: Gravel mulch shall be placed by hand or by mechanized equipment that provides full coverage at a uniform thickness of 2 inches in depth.

1012.7.6 Erosion Control Matts, Fabric or Blankets: the type of erosion control mats, fabric or blankets used shall be as specified on the plans or the Supplemental Technical Specifications or as approved by the ENGINEER. The anchoring of the erosion control items shall be as per the manufacturer's recommendations.

1012.8 PROTECTION OF NATIVE GRASS SEEDED AREA:

1012.8.1 GENERAL: The CONTRACTOR shall be responsible for protecting and caring for seeded areas until final acceptance of the work and shall repair at his expense any damage to seeded areas caused by pedestrian or vehicular traffic or vandalism.

1012.9 INSPECTION FOR NATIVE GRASS AREA:

1012.9.1 The following inspection shall be the minimum required inspections to native grass during the course of construction. Additional inspections shall be made at any time at the discretion of the ENGINEER.

1012.9.2 It shall be the responsibility of the CONTRACTOR to notify the ENGINEER, in writing, 48 hours in advance of each required inspection.

1012.9.3 The sequence of required inspections shall not be changed from the sequence listed below. The CONTRACTOR shall not proceed with work of the next sequence without written approval of the work of the previous sequence. Payment will not be approved for items which have not been inspected and approved in writing.

1012.9.3.1 Each phase of soil preparation shall be inspected in process.

1012.9.3.2 Finish grade shall be inspected.

1012.9.3.3 Seed shall be inspected prior to seeding.

1012.9.3.4 Seeded area shall be inspected after completion.

1012.9.3.5 Final inspection of the project and acceptance.

1012.10 MEASUREMENT AND PAYMENT

1012.10.1 MEASUREMENT: The measurement of native grass seeding shall be by the acre.

1012.10.2 Payment: Payment shall be made at the contract unit price per acre of native grass seeding complete in place, which shall include the seed, fertilizer, (if required) area preparation, seeding, soil amendments, (if required) and mulching.

AS-BUILT INFORMATION
CONTRACTOR David Montoya Const. Inc
WORK STAKED BY Bellingsley Engr. DATE
WORK STAKING VERIFICATION BY COA DATE
ACCEPTANCE BY WCI DATE 3/07
DRAWINGS ACCEPTANCE MICRO-FILM INFORMATION
RECORDED BY DATE
NO.

BENCH MARKS
THE STA. IS A USGS TABLET STAMPED "BLACK-2 1977" SET FLUSH W/ THE GROUND. THE STA. IS LOCATED 8.5 MI. N.W. OF DOWNTOWN ALBUQ. TO REACH THE STA. FROM THE INTX OF COORS/I-40 GO N. ON COORS 5.8 MI. TO PARADISE BLVD. TURN LEFT GO W. ON PARADISE BLVD. 1.1 MI. TO GOLF COURSE RD. TURN RIGHT GO N. ON GOLF COURSE RD. 1.3 MI. TO McMAHON BLVD. THE STA. IS ON THE LEFT.
N 1530241.52, E 372920.43
ELEVATION = 5213.926 FT. (2ND ORDER) (NGVD29)

SURVEY INFORMATION
FIELD NOTES
NO. BY DATE

ENGINEER'S SEAL
NEW MEXICO REGISTERED PROFESSIONAL ENGINEER 15781

NO.	DATE	REMARKS	BY
		REVISIONS	

WILSON & COMPANY, ENGINEERS & ARCHITECTS
DESIGNED BY EEA DATE NOV 2005
DRAWN BY ELO DATE NOV 2005
CHECKED BY EEA DATE NOV 2005

CITY OF ALBUQUERQUE
DEPARTMENT OF MUNICIPAL DEVELOPMENT
TRANSPORTATION DIVISION

McMAHON BLVD. EXTENSION-CALABACILLAS BRIDGE
GENERAL NOTES

Design Review Committee: APPROVED NOV 17 2005 DESIGN REVIEW COMMITTEE
City Engineer Approval: APPROVED NOV 17 20 CITY ENGINEER
Last Design Update | Mo./Day/Yr. | Mo./Day/Yr.

City Project No. COA 681602 | Zone Map No. A-10-Z | Sheet 1-3 Of

WILSON & COMPANY

X:\Public\PROJECTS\X221001202\T\2012GHGEN.dwg 11/14/2005 7:57:24 AM MST

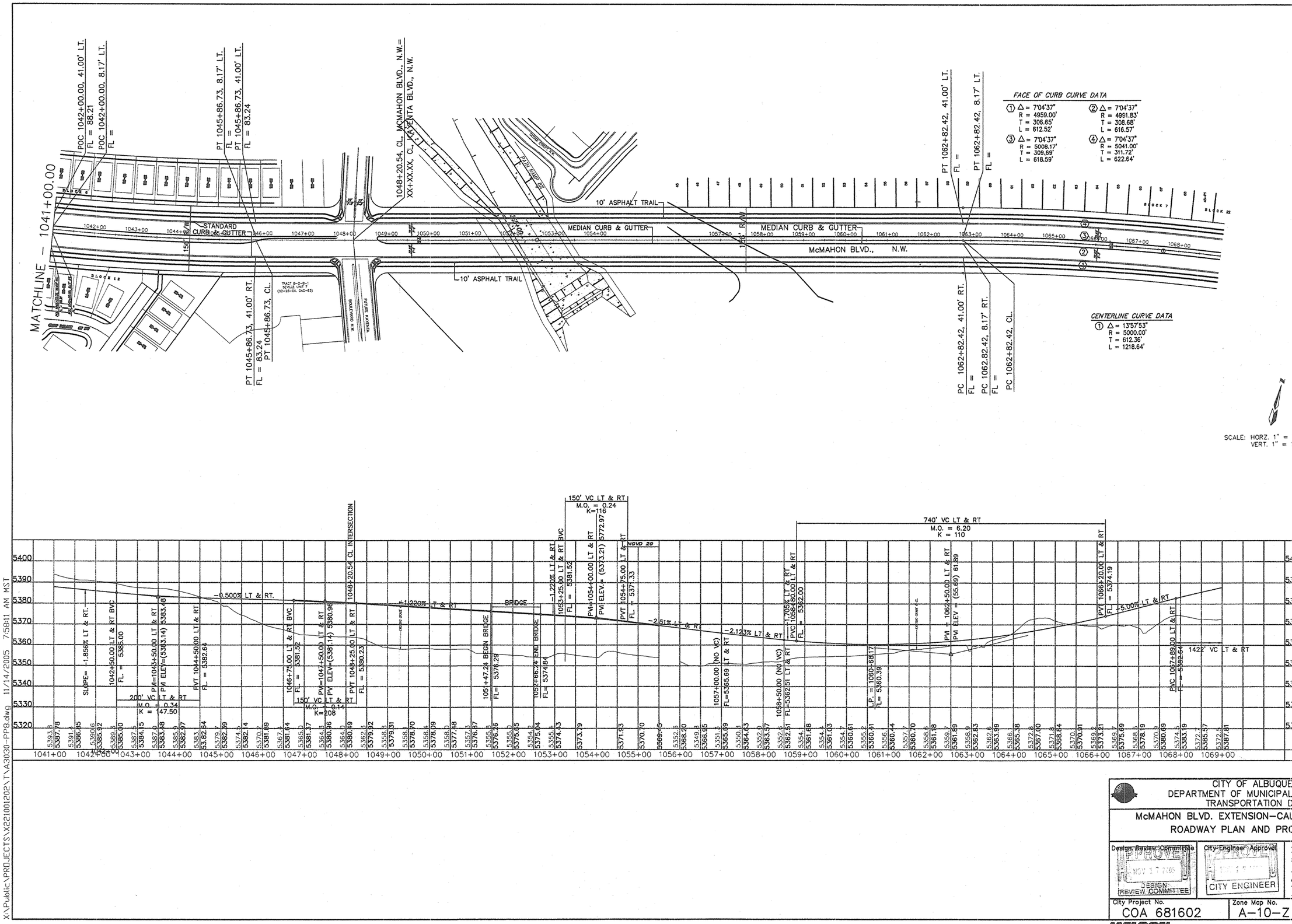

X:\Public\PROJECTS\X2100120 2\T\A3030-PP8.dwg 11/14/2005 7:58:11 AM MST

AS-BUILT INFORMATION

CONTRACTOR David Martinez Const. Inc.
WORK STAKED BY Gillingsley Engr. DATE
INSPECTOR'S ACCEPTANCE BY COA DATE
FIELD VERIFICATION BY COA/WCI DATE
DRAWINGS CORRECTED BY WCI DATE 3/07
MICRO-FILM INFORMATION
RECORDED BY DATE
NO

BENCH MARKS

THE STA. IS A USGS TABLET STAMPED 'BLACK-2 1977' SET FLUSH W/ THE GROUND. THE STA. IS LOCATED 8.5 MI. N.W. OF DOWNTOWN ALBUQ. TO REACH THE STA. FROM THE INTX OF COORS/I-40 GO N. ON COORS 5.8 MI. TO PARADISE BLVD. TURN LEFT GO W. ON PARADISE BLVD. 1.1 MI. TO GOLF COURSE RD. TURN RIGHT GO N. ON GOLF COURSE RD. 1.3 MI. TO McMAHON BLVD. THE STA. IS ON THE LEFT.
N 1530241.52, E 372920.43
ELEVATION = 5213.926 FT. (2ND ORDER) (NGVD29)

SURVEY INFORMATION

FIELD NOTES

NO.	BY	DATE

ENGINEER'S SEAL

ELIAS E. ARCHULETA
NEW MEXICO
15781
PROFESSIONAL ENGINEER
REGISTERED

NO.	DATE	REMARKS	BY
		REVISIONS	

WILSON & COMPANY, ENGINEERS & ARCHITECTS
DESIGNED BY EEA DATE NOV 2005
DRAWN BY ELO DATE NOV 2005
CHECKED BY EEA DATE NOV 2005

CITY OF ALBUQUERQUE
DEPARTMENT OF MUNICIPAL DEVELOPMENT
TRANSPORTATION DIVISION

McMAHON BLVD. EXTENSION–CALABACILLAS BRIDGE
ROADWAY PLAN AND PROFILE SHEET

Design Review Committee: APPROVED NOV 17 2005 DESIGN REVIEW COMMITTEE
City Engineer Approval: APPROVED CITY ENGINEER
Last Design Update | Mo./Day/Yr. | Mo./Day/Yr.

City Project No.	Zone Map No.	Sheet	Of
COA 681602	A-10-Z	3-1	

WILSON & COMPANY

4 of 164

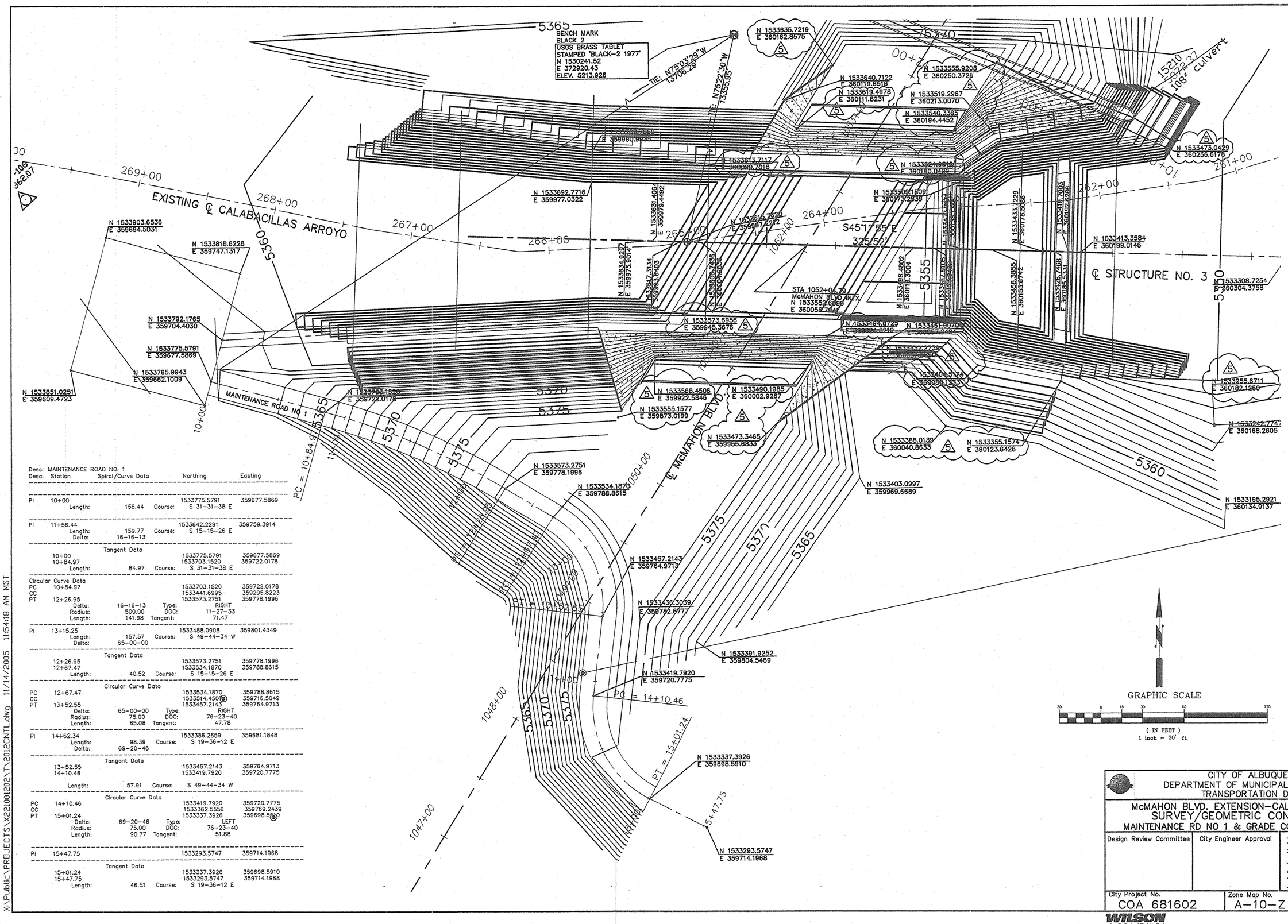

Desc: MAINTENANCE ROAD NO. 1

Desc.	Station	Spiral/Curve Data		Northing	Easting
PI	10+00			1533775.5791	359677.5869
	Length:	156.44	Course:	S 31-31-38 E	
PI	11+56.44			1533642.2291	359759.3914
	Length:	159.77	Course:	S 15-15-26 E	
	Delta:	16-16-13			
		Tangent Data			
	10+00			1533775.5791	359677.5869
	10+84.97			1533703.1520	359722.0178
	Length:	84.97	Course:	S 31-31-38 E	
Circular Curve Data					
PC	10+84.97			1533703.1520	359722.0178
CC				1533441.6995	359295.8223
PT	12+26.95			1533573.2751	359778.1996
	Delta:	16-16-13	Type:	RIGHT	
	Radius:	500.00	DOC:	11-27-33	
	Length:	141.98	Tangent:	71.47	
PI	13+15.25			1533488.0908	359801.4349
	Length:	157.57	Course:	S 49-44-34 W	
	Delta:	65-00-00			
		Tangent Data			
	12+26.95			1533573.2751	359778.1996
	12+67.47			1533534.1870	359788.8615
	Length:	40.52	Course:	S 15-15-26 E	
		Circular Curve Data			
PC	12+67.47			1533534.1870	359788.8615
CC				1533514.4500	359716.5049
PT	13+52.55			1533457.2143	359764.9713
	Delta:	65-00-00	Type:	RIGHT	
	Radius:	75.00	DOC:	76-23-40	
	Length:	85.08	Tangent:	47.78	
PI	14+62.34			1533386.2659	359681.1848
	Length:	98.39	Course:	S 19-36-12 E	
	Delta:	69-20-46			
		Tangent Data			
	13+52.55			1533457.2143	359764.9713
	14+10.46			1533419.7920	359720.7775
	Length:	57.91	Course:	S 49-44-34 W	
		Circular Curve Data			
PC	14+10.46			1533419.7920	359720.7775
CC				1533362.5556	359769.2439
PT	15+01.24			1533337.3926	359698.5910
	Delta:	69-20-46	Type:	LEFT	
	Radius:	75.00	DOC:	76-23-40	
	Length:	90.77	Tangent:	51.88	
PI	15+47.75			1533293.5747	359714.1968
		Tangent Data			
	15+01.24			1533337.3926	359698.5910
	15+47.75			1533293.5747	359714.1968
	Length:	46.51	Course:	S 19-36-12 E	

AS-BUILT INFORMATION

WORK STAKED BY: Billingsley Engr. DATE
INSPECTOR'S ACCEPTANCE BY: COA DATE
VERIFICATION BY: COA/WCI DATE
DRAWINGS CORRECTED BY: WCI DATE 3/07
MICRO-FILM INFORMATION
RECORDED BY DATE
NO.

CONTRACTOR: David Montoya Const. Inc.

BENCH MARKS

THE STA. IS A USGS TABLET STAMPED "BLACK-2 1977" SET FLUSH W/ THE GROUND. THE STA. IS LOCATED 8.5 MI. N.W. OF DOWNTOWN ALBUQ. TO REACH THE STA. FROM THE INTX OF COORS/I-40 GO N. ON COORS 5.8 MI. TO PARADISE BLVD. TURN LEFT GO W. ON PARADISE BLVD. 1.1 MI. TO GOLF COURSE RD. TURN RIGHT GO N. ON GOLF COURSE RD. 1.3 MI. TO McMAHON BLVD. THE STA. IS ON THE LEFT.
N 1530241.52, E 372920.43
ELEVATION = 5213.926 FT. (2ND ORDER) (NGV029)

SURVEY INFORMATION

FIELD NOTES

NO.	BY	DATE

ENGINEER'S SEAL

ALBUQUERQUE, NEW MEXICO (11955) REGISTERED PROFESSIONAL ENGINEER

NO.	DATE	REVISIONS
A	5-06-06	DESIGN REVISION
		REMARKS

WILSON & COMPANY, ENGINEERS & ARCHITECTS

		DATE
DESIGNED BY	EEA	NOV 2005
DRAWN BY	ELO	NOV 2005
CHECKED BY	EEA	NOV 2005

CRH BY

CITY OF ALBUQUERQUE
DEPARTMENT OF MUNICIPAL DEVELOPMENT
TRANSPORTATION DIVISION

McMAHON BLVD. EXTENSION-CALABACILLAS BRIDGE
SURVEY/GEOMETRIC CONTROL SHEET
MAINTENANCE RD NO 1 & GRADE CONTROL STRUCTURE 3

Design Review Committee	City Engineer Approval	Last Design Update	Mo./Day/Yr.	Mo./Day/Yr.

City Project No.	Zone Map No.	Sheet	Of
COA 681602	A-10-Z	3-2	

WILSON & COMPANY

X:\Public\PROJECTS\X22100120 2\T\2012CNTL.dwg 11/14/2005 11:54:18 AM MST

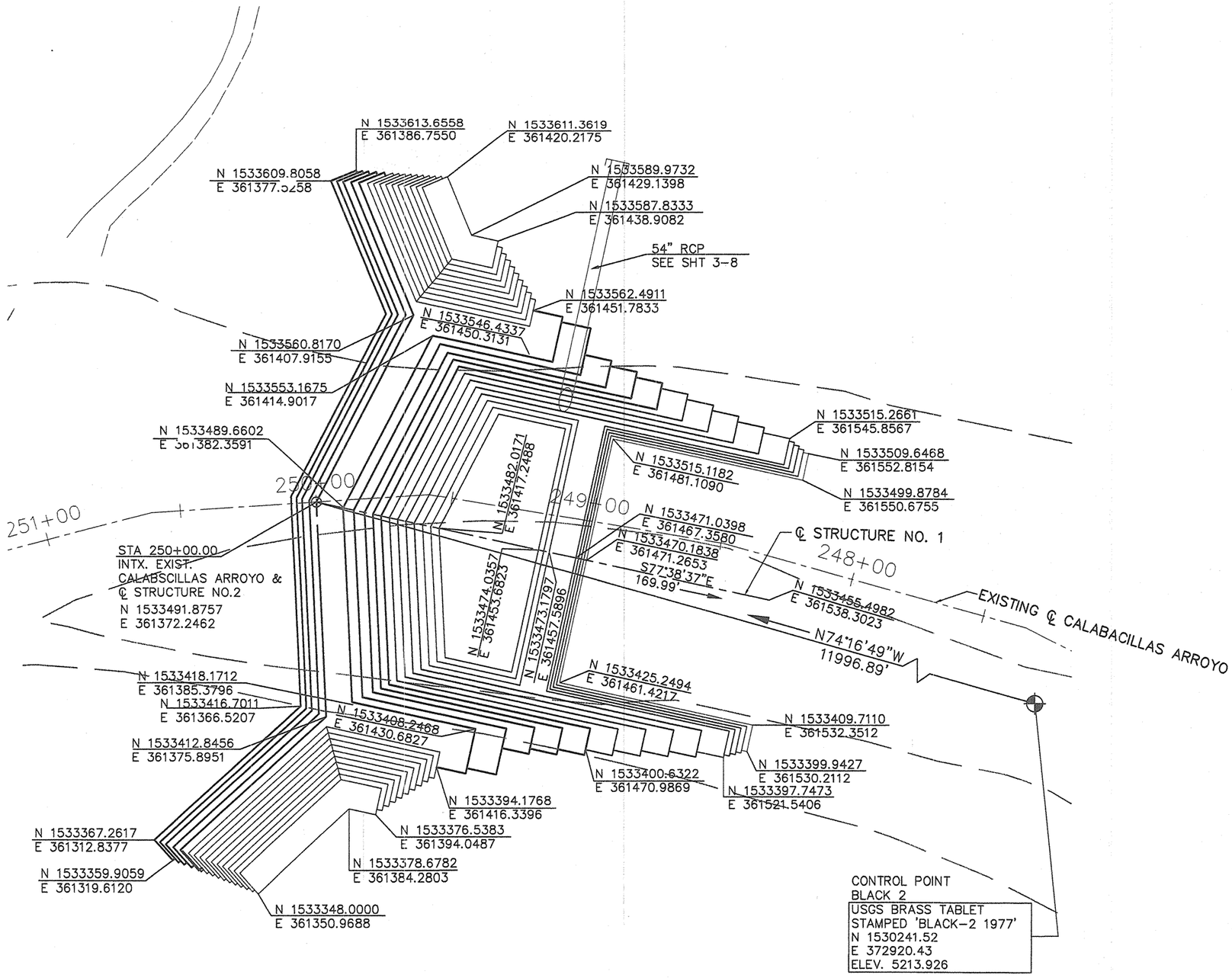

AS-BUILT INFORMATION

CONTRACTOR David Montoya Const. Inc.
WORK STAKED BY Billingsley Engr. DATE
INSPECTOR'S ACCEPTANCE COA DATE
FIELD VERIFICATION BY COA/WCI DATE
DRAWINGS CORRECTED BY WCI DATE 3/07
MICRO-FILM INFORMATION
RECORDED BY DATE
NO.

BENCH MARKS

THE STA. IS A USGS TABLET STAMPED 'BLACK-2 1977' SET FLUSH W/ THE GROUND. THE STA. IS LOCATED 8.5 MI. N.W. OF DOWNTOWN ALBUQ. TO REACH THE STA. FROM THE INTX. OF COORS/I-40 GO N. ON COORS 5.8 MI. TO PARADISE BLVD. TURN LEFT GO W. ON PARADISE BLVD. 1.1 MI. TO GOLF COURSE RD. TURN RIGHT GO N. ON GOLF COURSE RD. 1.3 MI. TO McMAHON BLVD. THE STA. IS ON THE LEFT.

N 1530241.52, E 372920.43
ELEVATION = 5213.926 FT. (2ND ORDER) (NGVD29)

SURVEY INFORMATION

FIELD NOTES

NO.	BY	DATE

ENGINEER'S SEAL

JAMES E. ARCHULETA
NEW MEXICO
15781
11/14/05
REGISTERED PROFESSIONAL ENGINEER

NO.	DATE	REMARKS	BY

REVISIONS

WILSON & COMPANY, ENGINEERS & ARCHITECTS

DESIGNED BY	EEA	DATE	NOV 2005
DRAWN BY	ELO	DATE	NOV 2005
CHECKED BY	EEA	DATE	NOV 2005

CITY OF ALBUQUERQUE
DEPARTMENT OF MUNICIPAL DEVELOPMENT
TRANSPORTATION DIVISION

McMAHON BLVD. EXTENSION–CALABACILLAS BRIDGE
SURVEY/GEOMETRIC CONTROL SHEET
GRADE CONTROL STRUCTURE 2

Design Review Committee: APPROVED NOV 17 2005 DESIGN REVIEW COMMITTEE
City Engineer Approval: APPROVED NOV 17 2005 CITY ENGINEER
Last Design Update: Mo./Day/Yr. Mo./Day/Yr.

City Project No.	Zone Map No.	Sheet	Of
COA 681602	A-10-Z	3-3	

WILSON & COMPANY

6 of 164

X:\Public\PROJECTS\X21001202\T\2012CNTL.dwg 11/14/2005 8:10:47 AM MST

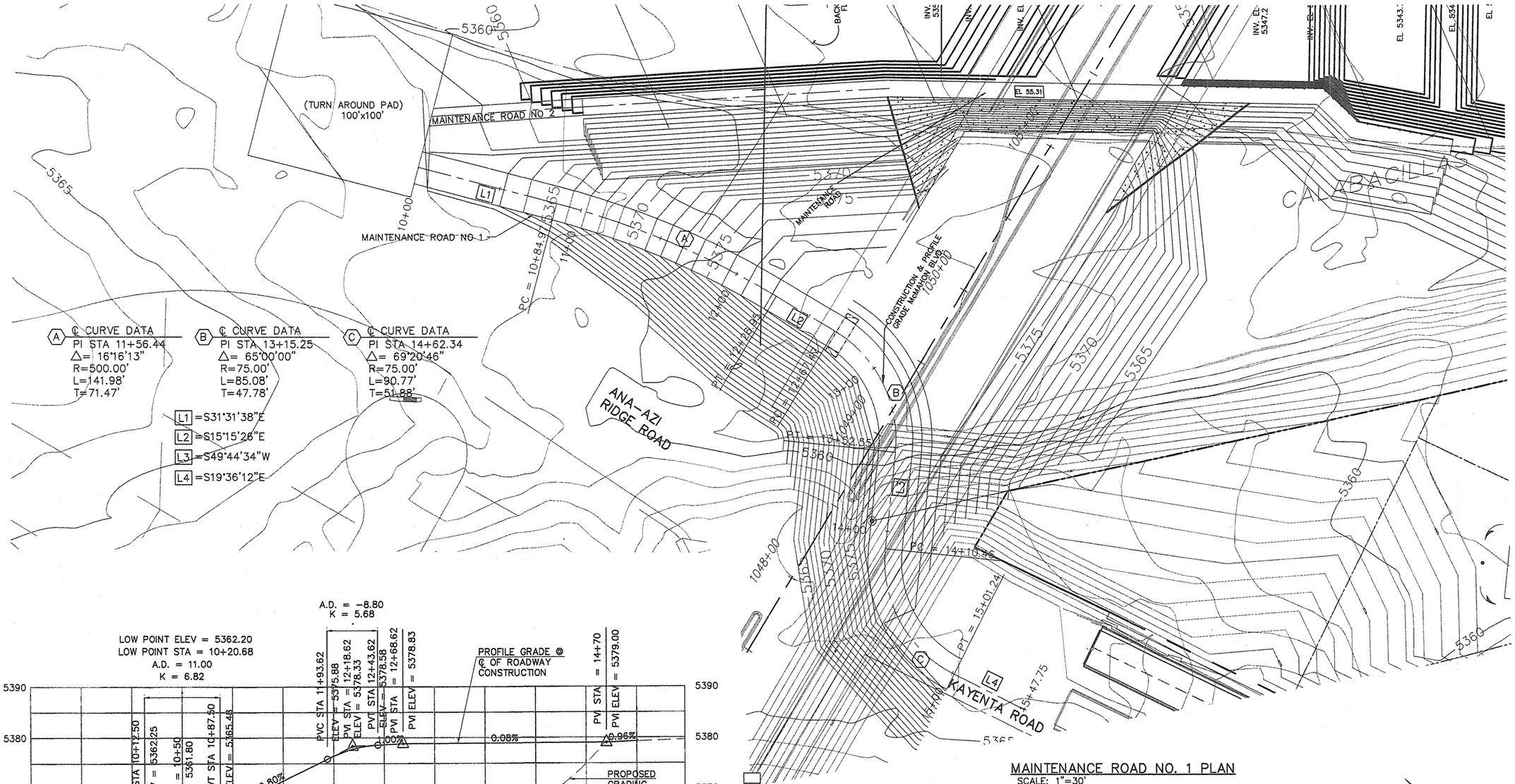

MAINTENANCE ROAD NO. 1 PLAN
SCALE: 1"=30'

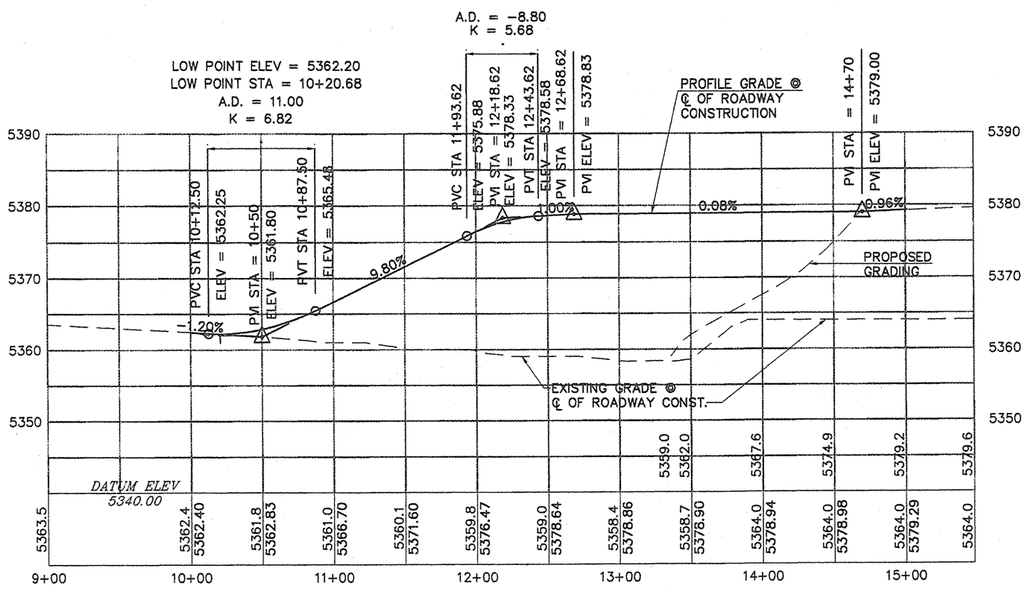

MAINTENANCE ROAD NO. 1
HORIZ: 1"=50'
VERT: 1"=10'

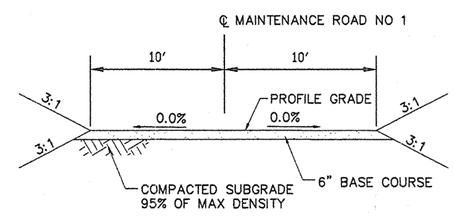

MAINTENANCE ROAD NON-TYPICAL SECTION
NTS

AS-BUILT INFORMATION

CONTRACTOR David Martinez Const. Inc.
WORK PERFORMED BY Billingsley Engr. DATE
INSPECTOR'S ACCEPTANCE BY COA DATE
FIELD VERIFICATION BY COA/WCL DATE
DRAWINGS CORRECTED BY WCL DATE 3/03
MICRO-FILM INFORMATION
RECORDED BY DATE
NO. DATE

BENCH MARKS

THE STA. IS A USGS TABLET STAMPED "BLACK-2 1977" SET FLUSH W/ THE GROUND. THE STA. IS LOCATED 8.5 MI. N.W. OF DOWNTOWN ALBUQ. TO REACH THE STA. FROM THE INTX OF COORS/I-40 GO N. ON COORS 5.8 MI. TO PARADISE BLVD. TURN LEFT GO W. ON PARADISE BLVD. 1.1 MI. TO GOLF COURSE RD. TURN RIGHT GO N. ON GOLF COURSE RD. 1.3 MI. TO McMAHON BLVD. THE STA. IS ON THE LEFT.
N 1530241.52, E 372920.43
ELEVATION = 5213.926 FT. (2ND ORDER) (NGVD29)

SURVEY INFORMATION

FIELD NOTES

NO.	BY	DATE

ENGINEER'S SEAL

ELIAS E. ARGUELLES
NEW MEXICO
15781
11/14/05
REGISTERED PROFESSIONAL ENGINEER

NO.	DATE	REMARKS	BY

REVISIONS

WILSON & COMPANY, ENGINEERS & ARCHITECTS

		DATE
DESIGNED BY	EEA	NOV 2005
DRAWN BY	ELO	NOV 2005
CHECKED BY	EEA	NOV 2005

CITY OF ALBUQUERQUE
DEPARTMENT OF MUNICIPAL DEVELOPMENT
TRANSPORTATION DIVISION

McMAHON BLVD. EXTENSION–CALABACILLAS BRIDGE
GRADE CONTROL STRUCTURE 3
MAINTENANCE ROAD NO. 1

Design Review Committee: APPROVED DESIGN REVIEW COMMITTEE
City Engineer Approval: APPROVED CITY ENGINEER
Last Design Update: Mo./Day/Yr. Mo./Day/Yr.

City Project No.	Zone Map No.	Sheet	Of
COA 681602	A-10-Z	3-4	

WILSON & COMPANY

X:\Public\PROJECTS\X2210012O2\T\2012DTL02.dwg 11/14/2005 8:2013 AM MST

NOTE:
1. FOR SECTIONS, SEE SHEET 3-4
CONCRETE SLOPE PAVING

INSTALL 161 LF OF HAND RAIL AROUND EDGE FROM END OF PIER SEE DETAIL SHT 3-19

INSTALL 171LF OF HAND RAIL AROUND EDGE FROM END OF PIER SEE DETAIL SHT 3-19

GRAPHIC SCALE
(IN FEET)
1 inch = 30 ft.

CITY OF ALBUQUERQUE
DEPARTMENT OF MUNICIPAL DEVELOPMENT
TRANSPORTATION DIVISION

McMAHON BLVD. EXTENSION–CALABACILLAS BRIDGE
GRADE CONTROL STRUCTURE 3
ROADWAY STA 1052+04.79

Design Review Committee	City Engineer Approval	Last Design Update	Mo./Day/Yr.	Mo./Day/Yr.

City Project No.	Zone Map No.	Sheet	Of
COA 681602	A-10-Z	3-5	

WILSON & COMPANY

AS-BUILT INFORMATION

CONTRACTOR David Martinez Const. Inc. DATE
WORK STAKED BY Billingsley Engr. DATE
INSPECTOR'S ACCEPTANCE BY COA DATE
FIELD VERIFICATION BY COA/WC1 DATE
DRAWINGS CORRECTED BY WC1 DATE 3/03
MICRO-FILM INFORMATION
RECORDED BY DATE
NO.

BENCH MARKS

THE STA. IS A USGS TABLET STAMPED "BLACK-2 1977" SET FLUSH W/ THE GROUND. THE STA. IS LOCATED 8.5 MI. N.W. OF DOWNTOWN ALBUQ. TO REACH THE STA. FROM THE INTX. OF COORS/I-40 GO N. ON COORS 5.8 MI. TO PARADISE BLVD. TURN LEFT GO W. ON PARADISE BLVD. 1.1 MI. TO GOLF COURSE RD. TURN RIGHT GO N. ON GOLF COURSE RD. 1.3 MI. TO McMAHON BLVD. THE STA. IS ON THE LEFT.
N 1530241.52, E 3729220.43
ELEVATION = 5213.926 FT. (2ND ORDER) (NGVD29)

SURVEY INFORMATION

FIELD NOTES

NO.	BY	DATE

ENGINEER'S SEAL

REGISTERED PROFESSIONAL ENGINEER

REVISIONS

NO.	DATE	REMARKS	BY
1	8-31-06	REVISED STRUCTURE	ELO
2	5-06-06	DESIGN REVISION	CRH
3	5-30-06	REVISED STRUCTURE	ELO

WILSON & COMPANY, ENGINEERS & ARCHITECTS

		DATE
DESIGNED BY	EEA	NOV 2005
DRAWN BY	ELO	NOV 2005
CHECKED BY	EEA	NOV 2005

X:\Public\PROJECTS\X2100202\T\2012DTL02.dwg 8/31/2006 12:35:44 PM MDT

NOTE:
1. FOR SECTIONS, SEE SHEET 3-4
CONCRETE SLOPE PAVING

INSTALL 161 LF OF HAND RAIL AROUND EDGE FROM END OF PIER SEE DETAIL SHT 3-19

INSTALL ADDITIONAL HANDRAIL 450 L.F.

INSTALL 171LF OF HAND RAIL AROUND EDGE FROM END OF PIER SEE DETAIL SHT 3-19

BACKFILL TO EXISTING FLOW ARROYO

CONSTRUCTION & PROFILE GRADE McMAHON BLVD.

ROADWAY STA TO 1052+04.79

FUTURE CHANNEL TRANSITION

SEDNA STREET N.W.

UPSTREAM

DOWNSTREAM

AVENUE

McMAHON BOULEVARD N.W.

MAINTENANCE ROAD

M.E.I. PRUDENT LINE shown on ALTA survey

GRAPHIC SCALE
(IN FEET)
1 inch = 30 ft.

AS-BUILT INFORMATION

CONTRACTOR David Montoya Const. Inc.
WORK STAKED BY Billingsley Engr. DATE
INSPECTORS ACCEPTANCE BY COA DATE
FINAL VERIFICATION BY COA/WCI DATE
DRAWINGS COMPILED BY WCI DATE 3/06
MICRO-FILM INFORMATION
RECORDED BY DATE
NO.

BENCH MARKS

THE STA. IS A USGS TABLET STAMPED 'BLACK-2 1977' SET FLUSH W/ THE GROUND. THE STA. IS LOCATED 8.5 MI. N.W. OF DOWNTOWN ALBUQ. TO REACH THE STA. FROM THE INTX OF COORS/I-40 GO N. ON COORS 5.8 MI. TO PARADISE BLVD. TURN LEFT GO W. ON PARADISE BLVD. 1.1 MI. TO GOLF COURSE RD. TURN RIGHT GO N. ON GOLF COURSE RD. 1.3 MI. TO McMAHON BLVD. THE STA. IS ON THE LEFT.
N 1530241.52, E 372920.43
ELEVATION = 5213.926 FT. (2ND ORDER) (NGVD29)

SURVEY INFORMATION

FIELD NOTES

NO.	BY	DATE

ENGINEER'S SEAL

REGISTERED PROFESSIONAL ENGINEER (11955) STATE OF NEW MEXICO

NO.	DATE	REMARKS
2	5-06-06	DESIGN REVISION
1	5-30-06	REVISED STRUCTURE

REVISIONS

WILSON & COMPANY, ENGINEERS & ARCHITECTS

	BY	DATE
DESIGNED BY	CRH	NOV 2005
DRAWN BY	ELO	NOV 2005
CHECKED BY	EEA	NOV 2005

CITY OF ALBUQUERQUE
DEPARTMENT OF MUNICIPAL DEVELOPMENT
TRANSPORTATION DIVISION

McMAHON BLVD. EXTENSION-CALABACILLAS BRIDGE
GRADE CONTROL STRUCTURE 3
ROADWAY STA 1052+04.79

Design Review Committee	City Engineer Approval	Last Design Update	Mo./Day/Yr.	Mo./Day/Yr.

City Project No.	Zone Map No.	Sheet	Of
COA 681602	A-10-Z	3-5	

WILSON & COMPANY

X:\Public\PROJECTS\X22100120 2\T\2012DTL02.dwg 6/13/2006 10:27:05 AM MDT

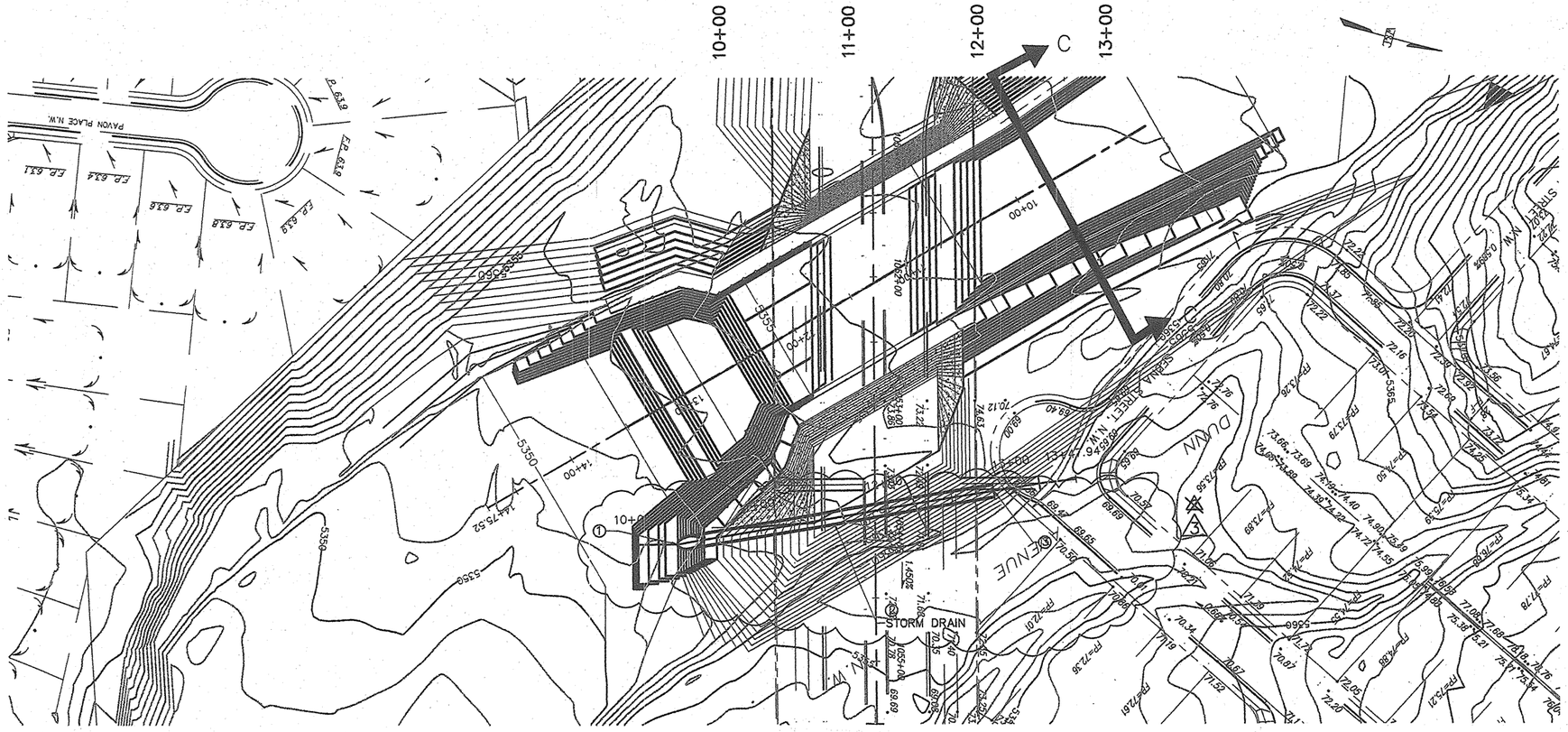

CONSTRUCTION BUILD NOTES

1. STA 10+35.00 BEGIN 108" SD PIPE
   INV=5351.00
   N:1,533,458.7391
   E: 360,293.9033
2. INSTALL 248.00LF OF 108" SD PIPE @ S=0.94%
3. 12+83.00 END 108" SD PIPE
   INV=5353.33
   N:1,533,684.3311
   E: 360,190.8899

McMAHON BLVD. EXTENSION AS-BUILT 108" STORM DRAIN

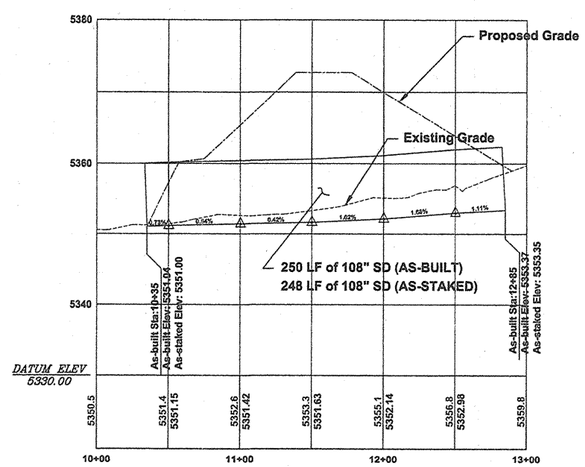

Storm Drain Profile
HORZ: 1" = 50'
VERT: 1" = 10'

Notes

1.) Existing ground observations were observed prior to placement of storm drain.

2.) As-built storm drain elevations were observed on January 17, 2007

CLIENT: David Montoya Construction	DRAWN BY: DLR.	SHEET No.
	CHKD. BY: BEJ.	1 OF 1
	DATE: 01/24/2007	

AS-BUILT INFORMATION
CONTRACTOR David Montoya Const. Inc. DATE
STAKED BY Billingsley Eng. DATE
REDLINES REVIEWED BY COA DATE
FIELD VERIFICATIONS BY COA/WCI DATE
DRAWINGS CORRECTED BY WCI DATE 3/07
MICRO-FILM INFORMATION
RECORDED BY DATE
NO.

BENCH MARKS
THE STA. IS A USGS TABLET STAMPED 'BLACK-2 1977' SET FLUSH W/ THE GROUND. THE STA. IS LOCATED 8.5 MI. N.W. OF DOWNTOWN ALBUQ. TO REACH THE STA. FROM THE INTX OF COORS/I-40 GO N. ON COORS 5.8 MI. TO PARADISE BLVD. TURN LEFT GO W. ON PARADISE BLVD. 1.1 MI. TO GOLF COURSE RD. TURN RIGHT GO N. ON GOLF COURSE RD. 1.3 MI. TO McMAHON BLVD. THE STA. IS ON THE LEFT.
N 1530241.52, E 372920.43
ELEVATION = 5213.926 FT. (2ND ORDER) (NGVD29)

SURVEY INFORMATION
FIELD NOTES

NO.	BY	DATE

ENGINEER'S SEAL
ROD A. BILLINGSLEY NEW MEXICO 10834 PROFESSIONAL SURVEYOR

NO.	DATE	REVISIONS	BY
3		REVISED SD DESIGN 5-11-06	DSA
2		REVISED SD DESIGN	EEA
1		REVISED SD PROFILE ELEVATIONS	

WILSON & COMPANY, ENGINEERS & ARCHITECTS
DESIGNED BY EEA DATE NOV 2005
DRAWN BY ELO DATE NOV 2005
CHECKED BY EEA DATE NOV 2005

CITY OF ALBUQUERQUE
DEPARTMENT OF MUNICIPAL DEVELOPMENT
TRANSPORTATION DIVISION

McMAHON BLVD. EXTENSION–CALABACILLAS BRIDGE
STORM DRAIN PLAN & PROFILE
GRADE CONTROL STRUCTURE #3

Design Review Committee	City Engineer Approval	Last Design Update	Mo./Day/Yr.	Mo./Day/Yr.

WILSON & COMPANY

City Project No.	Zone Map No.	Sheet	Of
COA 681602	A–10–Z	3–6	

X:\Public\PROJECTS\X221001202\TT\2012DTL02.dwg 6/1/2006 1:15:44 PM MDT

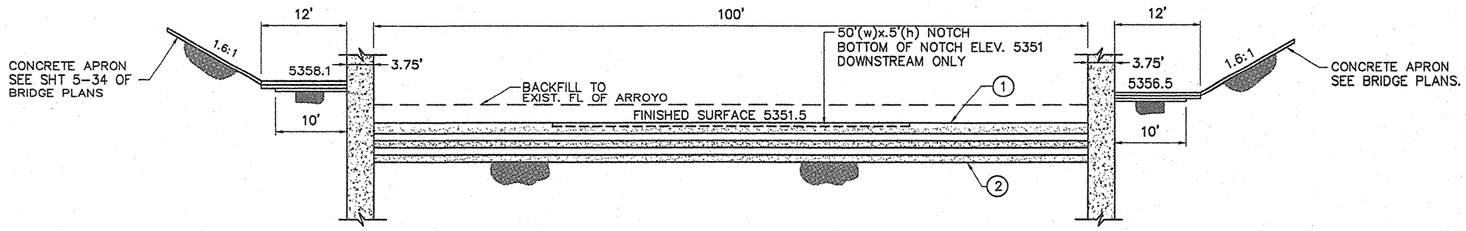

7 SECTION "A–A UPSTREAM" & "A–A DOWNSTREAM"

SCALE: 1"=10'

SHEET 3–5

	1	2
A–A UPSTREAM	5353.0	5348
A–A DOWNSTREAM	5351.5	5346

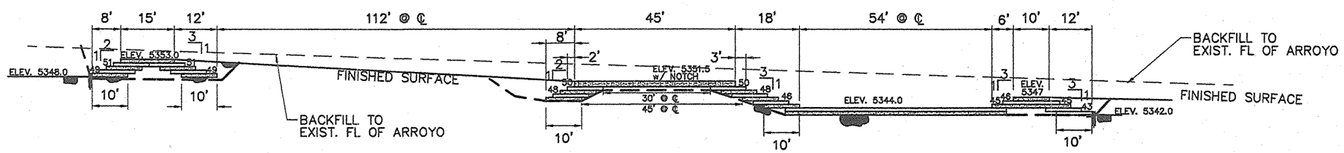

7 SECTION "B–B"

SCALE: 1"=20'

SHEET 3–5

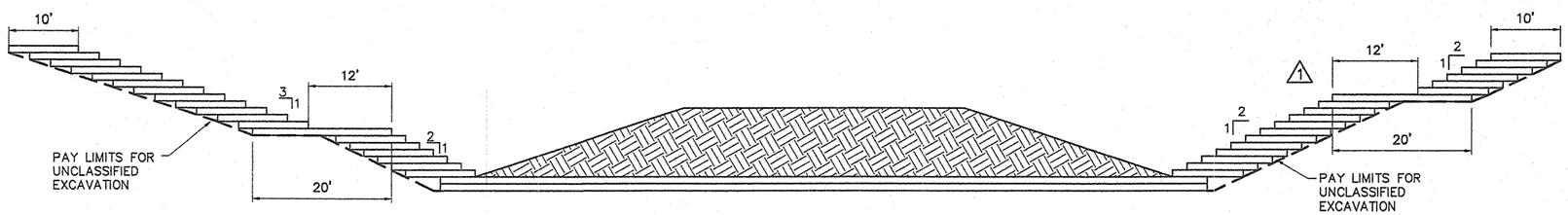

7 SECTION "C–C"

SCALE: 1"=10'

SHEET 3–6

AS-BUILT INFORMATION

CONTRACTOR David Nemoya Const. Inc.
WORK STAKED BY Billingsley Engr. DATE
INSPECTOR'S ACCEPTANCE BY COA DATE
VERIFICATION BY COA/WCI DATE
DRAWINGS CORRECTED BY WCI DATE 2/07
RECORDED BY MICRO-FILM INFORMATION DATE
NO.

BENCH MARKS

THE STA. IS A USGS TABLET STAMPED "BLACK-2 1977" SET FLUSH W/ THE GROUND. THE STA. IS LOCATED 8.5 MI. N.W. OF DOWNTOWN ALBUQ. TO REACH THE STA. FROM THE INTX OF COORS/I-40 GO N. ON COORS 5.8 MI. TO PARADISE BLVD. TURN LEFT GO W. ON PARADISE BLVD. 1.1 MI. TO GOLF COURSE RD. TURN RIGHT GO N. ON GOLF COURSE RD. 1.3 MI. TO McMAHON BLVD. THE STA. IS ON THE LEFT.

N 1530241.52, E 372920.43

ELEVATION = 5213.926 FT. (2ND ORDER) (NGVD29)

SURVEY INFORMATION

FIELD NOTES

NO.	BY	DATE

ENGINEER'S SEAL

NO.	DATE	REMARKS	BY
1	8-31-06	REVISED STRUCTURE	ELO
2	5-30-06	REVISED STRUCTURE	ELO

REVISIONS

WILSON & COMPANY, ENGINEERS & ARCHITECTS

DESIGNED BY EEA DATE NOV 2005
DRAWN BY ELO DATE NOV 2005
CHECKED BY EEA DATE NOV 2005

CITY OF ALBUQUERQUE
DEPARTMENT OF MUNICIPAL DEVELOPMENT
TRANSPORTATION DIVISION

McMAHON BLVD. EXTENSION–CALABACILLAS BRIDGE
GRADE CONTROL STRUCTURE 3 DETAILS
BRIDGE STA 1052+04.79

Design Review Committee	City Engineer Approval	Last Design Update	Mo./Day/Yr.	Mo./Day/Yr.

City Project No.	Zone Map No.	Sheet	Of
COA 681602	A–10–Z	3–7	

WILSON & COMPANY

X:\Public\PROJECTS\X2100120Z\T\2012DTL02.dwg 8/31/2006 11:26:46 AM MDT

NOTE:
CONTRACTOR SHALL EXCAVATE TO NEAT LINE GRADES AS SHOWN ON DETAIL THIS SHEET. THE WORK SHALL BE PAID AS UNCLASSIFIED EXCAVATION. MATERIAL SHALL BE STOCKPILED FOR USE IN SOIL CEMENT AND CHANNEL BACKFILL. NO PAYMENT WILL BE MADE FOR MULTIPLE MOVEMENT OR HANDLING OF STOCKPILES MATERIAL.

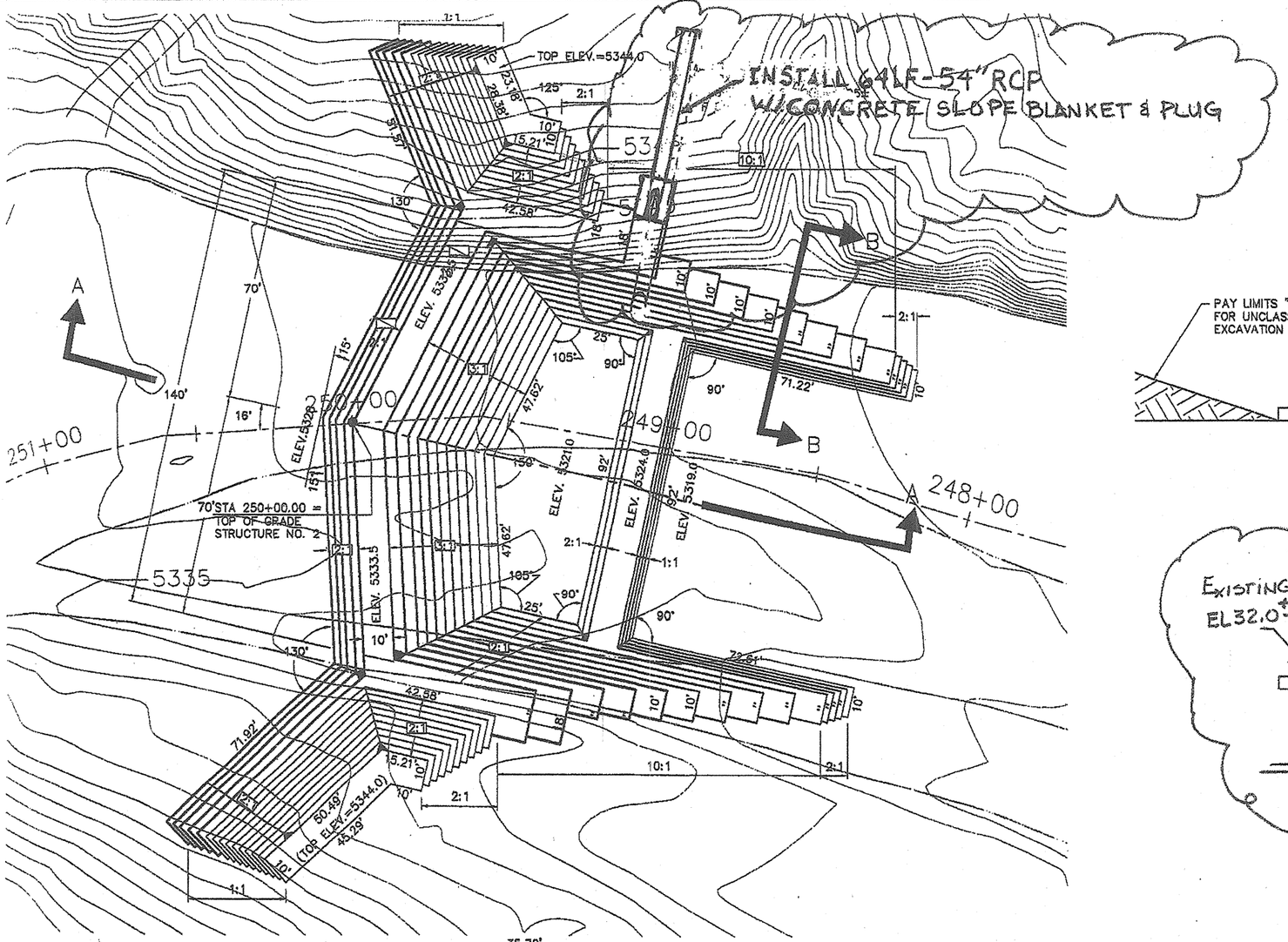

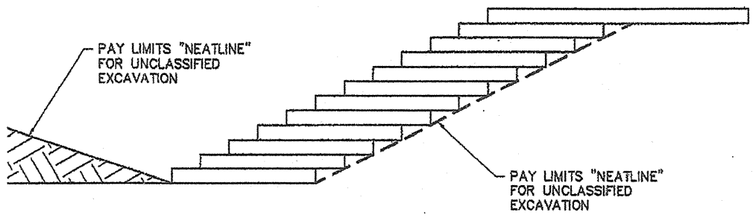

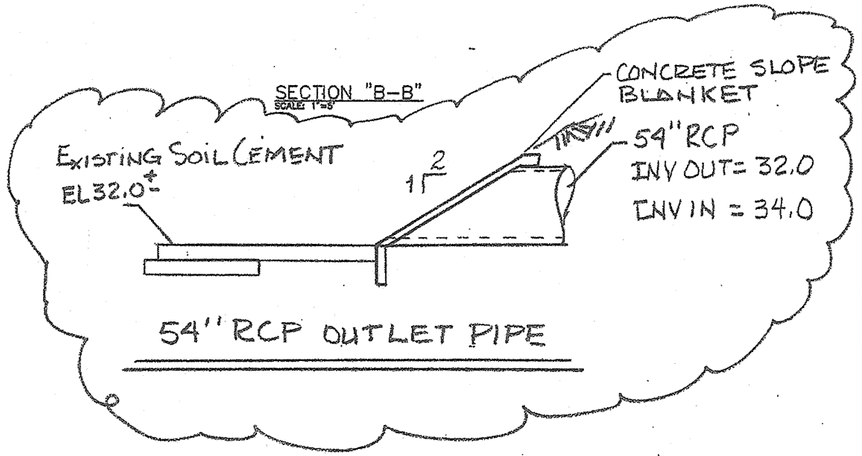

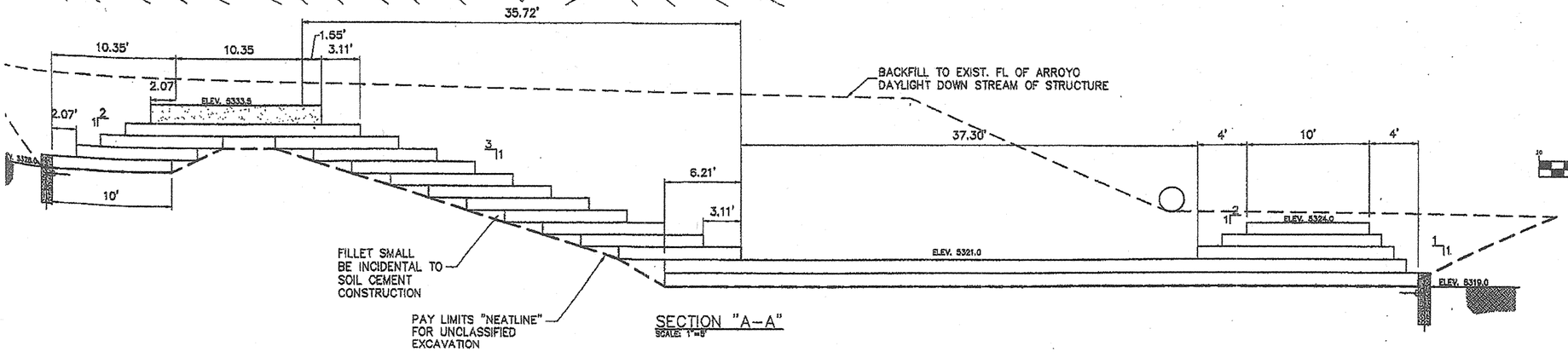

SECTION "A-A"
SCALE: 1"=5'

W&C

GRAPHIC SCALE
(IN FEET)
1 inch = 20 ft.

ENGINEER'S SEAL

NO.	DATE	REMARKS	BY
		REVISIONS	

WILSON & COMPANY, ENGINEERS & ARCHITECTS

DESIGNED BY	EEA	DATE NOV 2005
DRAWN BY	ELO	DATE NOV 2005
CHECKED BY	EEA	DATE NOV 2005

SURVEY INFORMATION

FIELD NOTES

NO.	BY	DATE

BENCH MARKS

THE STA. IS A USGS TABLET STAMPED "BLACK-2 1977" SET FLUSH W/ THE GROUND. THE STA. IS LOCATED 8.5 MI. N.W. OF DOWNTOWN ALBUQ. TO REACH THE STA. FROM THE INTX OF COORS/I-40 GO N. ON COORS 5.8 MI. TO PARADISE BLVD. TURN LEFT GO W. ON PARADISE BLVD. 1.1 MI. TO GOLF COURSE RD. TURN RIGHT GO N. ON GOLF COURSE 1.3 MI. TO McMAHON BLVD. THE STA. IS ON THE LEFT. N 1530241.52, E 372920.43 ELEVATION = 5213.926 FT. (2ND ORDER) (NGVD29)

AS-BUILT INFORMATION

CONTRACTOR Tomas Montoya Const. Inc. DATE
FIELD VERIFICATION BY Tillman Sky Const. DATE
RECORDED BY COA
ACCEPTANCE BY COA DATE
VERIFICATION BY COA INC. DATE
DRAWINGS — WCL DATE 3/07

CITY OF ALBUQUERQUE
DEPARTMENT OF MUNICIPAL DEVELOPMENT
TRANSPORTATION DIVISION

McMAHON BLVD. EXTENSION–CALABACILLAS BRIDGE
GRADE CONTROL STRUCTURE 2
ARROYO STA 250+00.00

Design: APPROVED DESIGN REVIEW COMMITTEE
APPROVED CITY ENGINEER
Last Design Update | Mo./Day/Yr. | Mo./Day/Yr.

City Project No.	Zone Map No.	Sheet	Of
COA 681602	A-10-Z	3-8	

WILSON

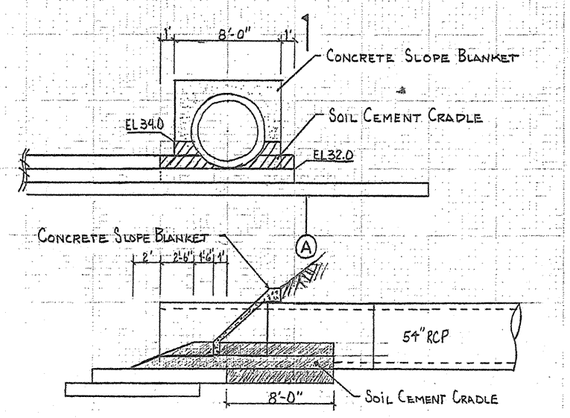

WILSON & COMPANY

NO.	DATE	REMARKS	BY

REVISIONS

WILSON & COMPANY, ENGINEERS & ARCHITECTS

DESIGNED BY
DRAWN BY
CHECKED BY

ENGINEER'S SEAL

SURVEY INFORMATION

FIELD NOTES

NO.	BY	DATE

BENCH MARKS

THE STA. IS A USGS TABLET STAMPED 'BLACK-2 1977' SET FLUSH W/ THE GROUND. THE STA. IS LOCATED 8.5 MI. N.W. OF DOWNTOWN ALBUQ. TO REACH THE STA. FROM THE INTX. OF COORS/I-40 GO N. ON COORS 5.8 MI. TO PARADISE BLVD. TURN LEFT GO W. ON PARADISE BLVD. 1.1 MI. TO GOLF COURSE RD. TURN RIGHT GO N. ON GOLF COURSE RD. 1.3 MI. TO McMAHON BLVD. THE STA. IS ON THE LEFT.
N 1530241.52, E 372920.43
ELEVATION = 5213.926 FT. (2ND ORDER) (NGVD29)

AS-BUILT INFORMATION

CONTRACTOR'S WORK WORKED BY David Montoya Const. Inc. DATE
CONTRACTOR'S ACCEPTANCE BY Billingsley Engr. DATE
FIELD VERIFICATION BY COA/WCI DATE
DRAWINGS CORRECTED BY WCI DATE 3/07
RECORDED BY MICRO-FILM INFORMATION DATE
NO.

CITY OF ALBUQUERQUE
DEPARTMENT OF MUNICIPAL DEVELOPMENT
TRANSPORTATION DIVISION

McMAHON BLVD. EXTENSION–CALABACILLAS BRIDGE

Design Review Committee	City Engineer Approval	Last Design Update	Mo./Day/Yr.	Mo./Day/Yr.

City Project No.	Zone Map No.	Sheet	Of
COA 681602	A–10–Z	3-8a	

WILSON & COMPANY

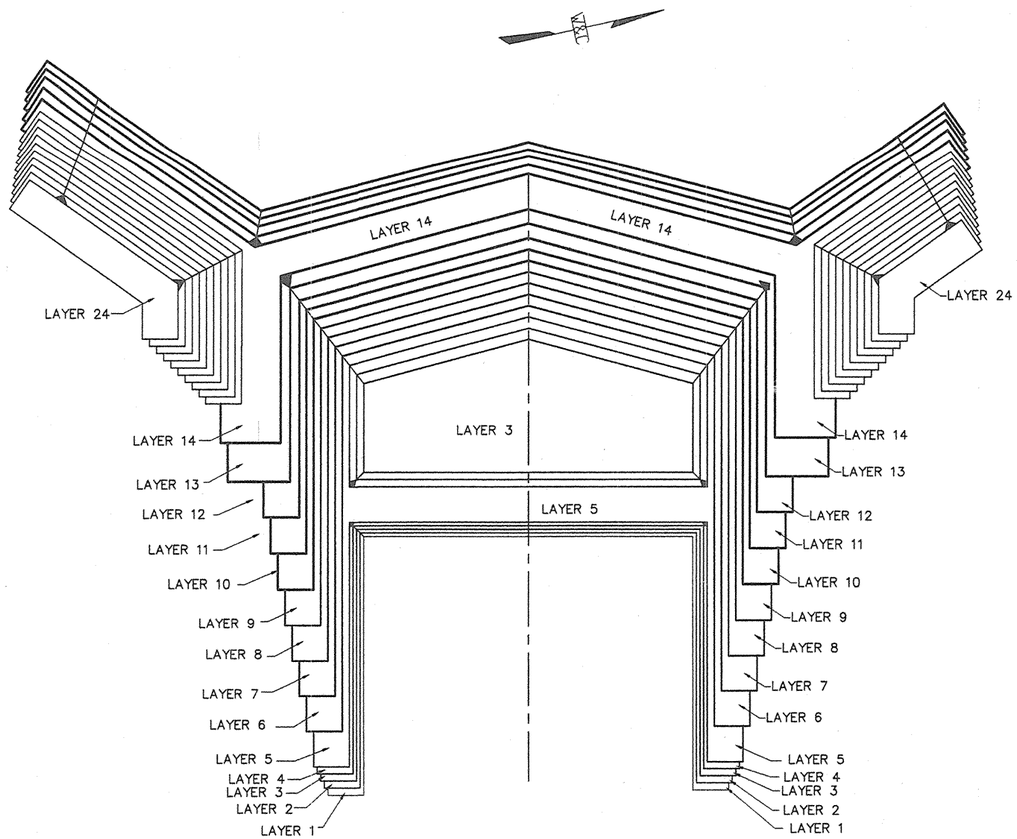

GRADE CONTROL STRUCTURE 2

AS-BUILT INFORMATION

CONTRACTOR David Nortoya Const. Inc.
WORK PERFORMED BY Billingsley Engr. DATE
RECORD DRAWINGS ACCEPTANCE BY COA DATE
FIELD VERIFICATION BY COA/WCI DATE
DRAWINGS CORRECTED BY WCI DATE 3/07
RECORDED BY DATE
NO.

BENCH MARKS

THE STA. IS A USGS TABLET STAMPED "BLACK-2 1977" SET FLUSH W/ THE GROUND. THE STA. IS LOCATED 8.5 MI. N.W. OF DOWNTOWN ALBUQ. TO REACH THE STA. FROM THE INTX OF COORS/I-40 GO N. ON COORS 5.8 MI. TO PARADISE BLVD. TURN LEFT GO W. ON PARADISE BLVD. 1.1 MI. TO GOLF COURSE RD. TURN RIGHT GO N. ON GOLF COURSE RD. 1.3 MI. TO McMAHON BLVD. THE STA. IS ON THE LEFT.
N 1530241.52, E 372920.43
ELEVATION = 5213.926 FT. (2ND ORDER) (NGVD29)

SURVEY INFORMATION

FIELD NOTES

NO.	BY	DATE

ENGINEER'S SEAL

STATE OF ILLINOIS
JAMES E. ARCHULETA
15781
11/14/05
REGISTERED PROFESSIONAL ENGINEER

NO.	DATE	REMARKS	BY

REVISIONS

WILSON & COMPANY, ENGINEERS & ARCHITECTS

DESIGNED BY EEA DATE NOV 2005
DRAWN BY ELO DATE NOV 2005
CHECKED BY EEA DATE NOV 2005

CITY OF ALBUQUERQUE
DEPARTMENT OF MUNICIPAL DEVELOPMENT
TRANSPORTATION DIVISION

McMAHON BLVD. EXTENSION-CALABACILLAS BRIDGE
GRADE CONTROL STRUCTURE 2
LAYER DETAILS

Design Review Committee: APPROVED NOV 17 2005 DESIGN REVIEW COMMITTEE
City Engineer Approval: APPROVED NOV 17 2005 CITY ENGINEER
Last Design Update: Mo./Day/Yr. Mo./Day/Yr.

City Project No.	Zone Map No.	Sheet	Of
COA 681602	A-10-Z	3-9	

WILSON & COMPANY

X:\Public\PRDJECTS\X2100202\T\2012DTL03.dwg 11/14/2005 8:53:11 AM MST

LAYERS 1 & 2

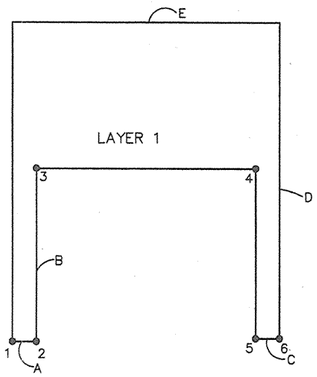

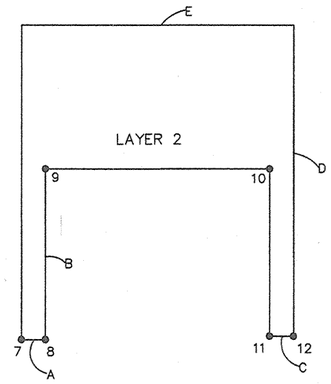

POINT TABLE LAYER 1		
POINT	NORTHING	EASTING
1	1533399.94	361530.21
2	1533409.71	361532.35
3	1533425.25	361461.42
4	1533515.12	361481.11
5	1533499.88	361550.68
6	1533509.65	361552.82

POINT TABLE LAYER 2		
POINT	NORTHING	EASTING
7	1533399.39	361528.04
8	1533409.16	361530.18
9	1533424.49	361460.23
10	1533516.31	361480.35
11	1533501.28	361548.94
12	1533511.05	361551.08

DIMENSION TABLE							
LAYER	A	B	C	D	E	ELEV	VOLUME(CY)
1	10'	71.22'	10'	133.41'	112'	5320	311.24
2	10'	70.22'	10'	132.80'	114'	5321	310.89

LAYERS 3 THRU 5

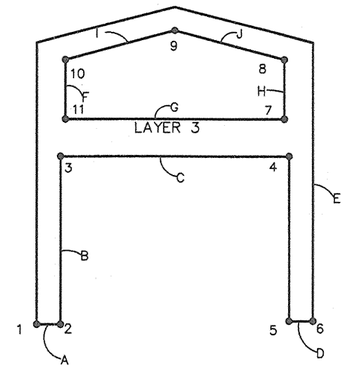

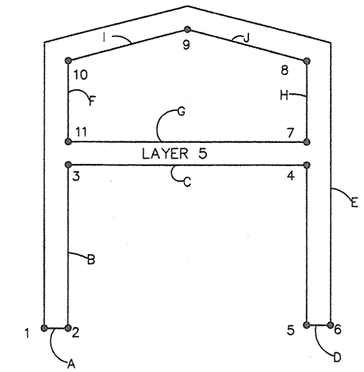

POINT TABLE LAYER 3		
POINT	NORTHING	EASTING
1	1533398.85	361525.88
2	1533407.52	361523.68
3	1533423.72	361459.04
4	1533517.50	361479.58
5	1533502.69	361547.20
6	1533512.46	361549.34
7	1533518.97	361463.53
8	1533524.31	361439.13
9	1533482.02	361417.25
10	1533434.45	361419.45
11	1533429.10	361443.84

POINT TABLE LAYER 5		
POINT	NORTHING	EASTING
1	1533397.75	361521.54
2	1533407.52	361523.68
3	1533422.20	361456.66
4	1533519.88	361478.06
5	1533505.50	361543.72
6	1533515.27	361545.86
7	1533522.02	361468.29
8	1533529.32	361434.97
9	1533483.35	361411.18
10	1533431.64	361413.59
11	1533424.34	361446.89

DIMENSION TABLE												
LAYER	A	B	C	D	E	F	G	H	I	J	ELEV	VOLUME(CY)
3	10'	69.22'	96'	10'	117.33'	24.97'	92'	24.97'	47.62'	47.62'	5322	185.78
4	10'	69.61'	98'	10'	118.63'	29.54'	96'	29.54'	49.69'	46.69'	5323	175.98
5	10'	67.22'	100'	10'	119'	34.11'	97'	34.11'	51.76'	51.76'	5324	165.04

LAYERS 6 THRU 9

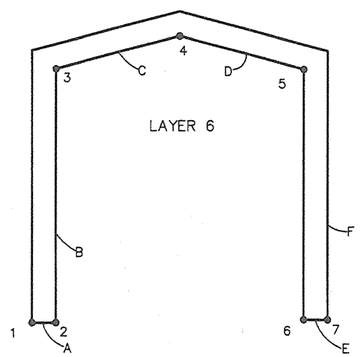

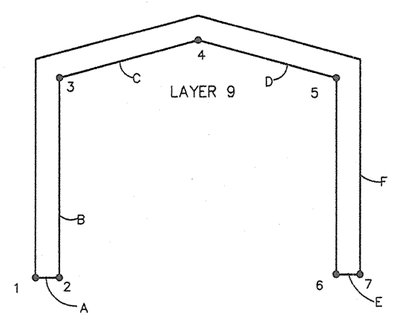

POINT TABLE LAYER 9		
POINT	NORTHING	EASTING
1	1533397.93	361511.34
2	1533407.70	361513.48
3	1533430.23	361410.63
4	1533484.01	361408.15
5	1533531.82	361432.89
6	1533509.59	361534.38
7	1533519.36	361536.52

POINT TABLE LAYER 9		
POINT	NORTHING	EASTING
1	1533398.49	361480.75
2	1533408.26	361482.90
3	1533426.02	361401.81
4	1533486.00	361399.05
5	1533539.34	361426.64
6	1533521.87	361506.36
7	1533531.64	361508.50

DIMENSION TABLE								
LAYER	A	B	C	D	E	F	ELEV	VOLUME(CY)
6	10'	105.29'	53.83'	53.83'	10'	111.57'	5325	124.03
7	10'	97.86'	55.91'	55.91'	10'	104.14'	5326	120.06
8	10'	90.43'	57.98'	57.98'	10'	96.71'	5327	116.09
9	10'	83'	60.05'	60.05'	10'	89.28'	5328	112.12

AS-BUILT INFORMATION
CONTRACTOR David Montoya Const. Inc.
WORK STAKED BY Billingsley Engr. DATE
INSPECTOR'S ACCEPTANCE BY CoA DATE
FIELD VERIFICATION BY COA/WCI DATE
DRAWINGS CORRECTED BY WCI DATE 3/03
RECORDED BY MICRO-FILM INFORMATION DATE
NO.

BENCH MARKS
THE STA. IS A USGS TABLET STAMPED 'BLACK-2 1977' SET FLUSH W/ THE GROUND. THE STA. IS LOCATED 8.5 MI. N.W. OF DOWNTOWN ALBUQ. TO REACH THE STA. FROM THE INTX. OF COORS/I-40 GO N. ON COORS 5.8 MI. TO PARADISE BLVD. TURN LEFT GO W. ON PARADISE BLVD. 1.1 MI. TO GOLF COURSE RD. TURN RIGHT GO N. ON GOLF COURSE RD. 1.3 MI. TO McMAHON BLVD. THE STA. IS ON THE LEFT.
N 1530241.52, E 372920.43
ELEVATION = 5213.926 FT. (2ND ORDER) (NGVD29)

SURVEY INFORMATION
FIELD NOTES
NO. BY DATE

ENGINEER'S SEAL
ELIAS E. BROWNER
NEW MEXICO
15781
11/14/05
REGISTERED PROFESSIONAL ENGINEER

NO.	DATE	REMARKS	BY
		REVISIONS	

WILSON & COMPANY, ENGINEERS & ARCHITECTS
DESIGNED BY EEA DATE NOV 2005
DRAWN BY ELO DATE NOV 2005
CHECKED BY EEA DATE NOV 2005

CITY OF ALBUQUERQUE
DEPARTMENT OF MUNICIPAL DEVELOPMENT
TRANSPORTATION DIVISION

McMAHON BLVD. EXTENSION–CALABACILLAS BRIDGE
GRADE CONTROL STRUCTURE 2
LAYER DETAILS

Design Review Committee: PROVED — DESIGN REVIEW COMMITTEE
City Engineer Approval: PROVED — CITY ENGINEER
Last Design Update: Mo./Day/Yr. Mo./Day/Yr.

City Project No. COA 681602
Zone Map No. A–10–Z
Sheet 3–10 Of

WILSON & COMPANY

X:\Public\PRDJECTS\X221001202\T\2012DTL03.dwg 11/14/2005 8:53:11 AM MST

LAYERS 10 THRU 14

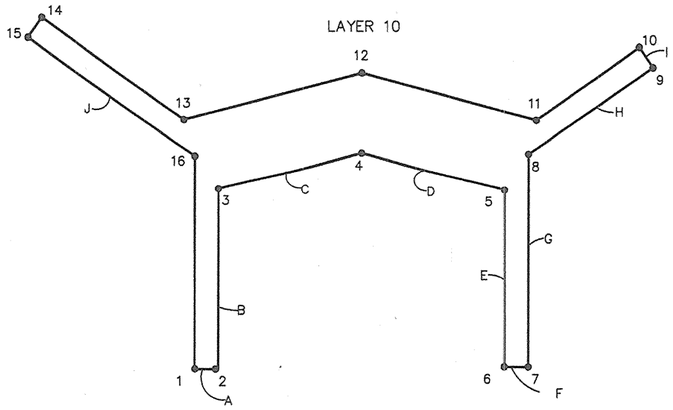

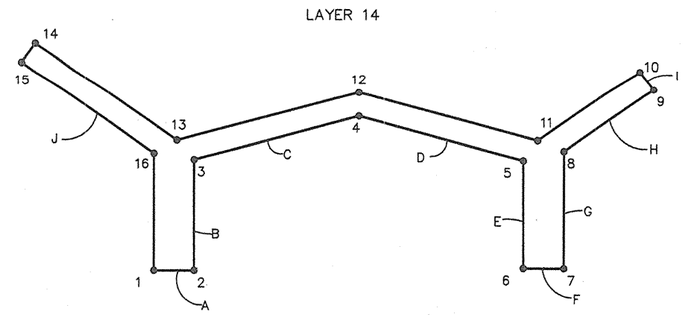

POINT TABLE LAYER 10		
POINT	NORTHING	EASTING
1	1533398.68	361470.56
2	1533408.45	361472.70
3	1533424.62	361398.88
4	1533486.67	361396.01
5	1533541.84	361424.56
6	1533525.97	361497.02
7	1533535.73	361499.15
8	1533555.00	361411.22

POINT TABLE LAYER 10		
POINT	NORTHING	EASTING
9	1533613.66	361386.76
10	1533609.81	361377.53
11	1533561.23	361397.79
12	1533493.91	361362.96
13	1533416.70	361366.52
14	1533367.26	361312.84
15	1533359.91	361319.61
16	1533417.94	361382.63

POINT TABLE LAYER 14		
POINT	NORTHING	EASTING
1	1533391.82	361427.08
2	1533408.25	361430.68
3	1533418.17	361385.38
4	1533489.72	361382.08
5	1533553.17	361414.90
6	1533543.53	361458.89
7	1533560.14	361462.53
8	1533570.62	361414.66

POINT TABLE LAYER 14		
POINT	NORTHING	EASTING
9	1533612.95	361397.00
10	1533609.10	361387.77
11	1533560.82	361407.92
12	1533491.88	361372.25
13	1533412.85	361375.90
14	1533363.62	361322.44
15	1533356.26	361329.21
16	1533402.31	361379.22

DIMENSION TABLE												
LAYER	A	B	C	D	E	F	G	H	I	J	ELEV	VOLUME(CY)
10	10'	75.57'	62.12'	62.12'	74.18'	10'	90.02	63.56	10'	85.67'	5329	283.19
11	10'	68.14'	64.19'	64.19'	66.75'	10'	78.97'	61.52'	10'	83.63'	5330	253.22
12	10'	60.71'	66.26'	66.26'	59.32'	10'	67.93'	59.48'	10'	81.59'	5331	221.89
13	17.41'	54.05'	68.94'	68.85'	52.67'	17.5'	61.77'	47.79'	10'	69.90'	5332	214.13
14	16.81'	46.38'	71.63'	71.43'	45.03'	17'	49'	45.87'	10'	67.98'	5333.5	161.92

LAYERS 15 THRU 24

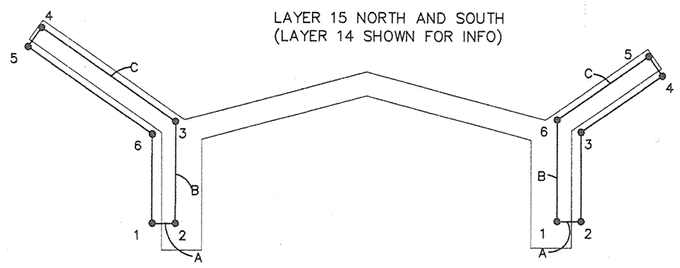

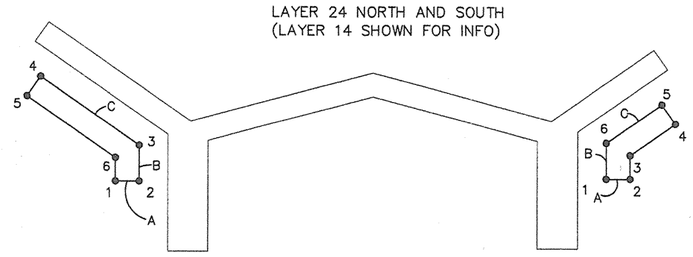

POINT TABLE LAYER 15 SOUTH		
POINT	NORTHING	EASTING
1	1533390.07	361415.48
2	1533399.84	361417.58
3	1533409.15	361376.03
4	1533362.50	361325.38
5	1533355.14	361332.16
6	1533398.27	361378.98

POINT TABLE LAYER 15 NORTH		
POINT	NORTHING	EASTING
1	1533556.63	361450.50
2	1533566.40	361452.64
3	1533574.40	361416.13
4	1533612.74	361400.14
5	1533608.89	361390.91
6	1533565.74	361406.91

POINT TABLE LAYER 24 SOUTH		
POINT	NORTHING	EASTING
1	1533376.54	361394.05
2	1533386.31	361396.19
3	1533389.56	361381.34
4	1533355.36	361344.19
5	1533348.00	361350.97
6	1533378.68	361384.28

POINT TABLE LAYER 24 NORTH		
POINT	NORTHING	EASTING
1	1533578.07	361436.77
2	1533587.83	361438.91
3	1533589.97	361429.14
4	1533611.36	361420.22
5	1533607.51	361410.99
6	1533581.32	361421.91

DIMENSION TABLE SOUTH					
LAYER	A	B	C	ELEV	VOLUME(CY)
15	10'	42.72'	68.61'	5335	39.02
16	10'	39.62'	66.82'	5336	37.46
17	10'	36.49'	64.78'	5337	35.58
18	10'	33.45'	62.74'	5338	33.70
19	10'	30.41'	60.70'	5339	31.82
20	10'	27.37'	58.66'	5340	29.94
21	10'	24.33'	56.62'	5341	28.05
22	10'	21.29'	54.57'	5342	26.17
23	10'	18.25'	52.53'	5343	24.29
24	10'	15.21'	50.49'	5344	22.40

DIMENSION TABLE NORTH					
LAYER	A	B	C	ELEV	VOLUME(CY)
15	10'	42.58'	46.75'	5335	31.16
16	10'	39.54'	44.71'	5336	29.27
17	10'	36.49'	42.67'	5337	27.39
18	10'	33.45'	40.63'	5338	25.51
19	10'	30.41'	38.59'	5339	23.67
20	10'	27.37'	36.55'	5340	21.74
21	10'	24.33'	34.50'	5341	19.86
22	10'	21.29'	32.46'	5342	17.98
23	10'	18.25'	30.42'	5343	16.10
24	10'	15.21'	28.38'	5344	14.22

AS-BUILT INFORMATION

CONTRACTOR David Montoya Const. Inc.
WORK STAKED BY Billingsley Eng.
RECEIVED FOR ACCEPTANCE BY COA DATE
FIELD VERIFICATION BY COA/WC DATE
DRAWINGS CORRECTED BY WC DATE 3/07
MICRO-FILM INFORMATION
RECORDED BY DATE
NO.

BENCH MARKS

THE STA. IS A USGS TABLET STAMPED 'BLACK-2 1977' SET FLUSH W/ THE GROUND. THE STA. IS LOCATED 8.5 MI. N.W. OF DOWNTOWN ALBUQ. TO REACH THE STA. FROM THE INTX OF COORS/I-40 GO N. ON COORS 5.8 MI. TO PARADISE BLVD. TURN LEFT GO W. ON PARADISE BLVD. 1.1 MI. TO GOLF COURSE RD. TURN RIGHT GO N. ON GOLF COURSE RD. 1.3 MI. TO McMAHON BLVD. THE STA. IS ON THE LEFT.
N 1530241.52, E 372920.43
ELEVATION = 5213.926 FT. (2ND ORDER) (NGVD29)

SURVEY INFORMATION
FIELD NOTES

NO.	BY	DATE

ENGINEER'S SEAL

REGISTERED PROFESSIONAL ENGINEER 15781 11/14/05

NO.	DATE	REMARKS	BY
		REVISIONS	

WILSON & COMPANY, ENGINEERS & ARCHITECTS
DESIGNED BY EEA DATE NOV 2005
DRAWN BY ELO DATE NOV 2005
CHECKED BY EEA DATE NOV 2005

CITY OF ALBUQUERQUE
DEPARTMENT OF MUNICIPAL DEVELOPMENT
TRANSPORTATION DIVISION

McMAHON BLVD. EXTENSION–CALABACILLAS BRIDGE
GRADE CONTROL STRUCTURE 2
LAYER DETAILS

Design Review Committee: PROVED DESIGN REVIEW COMMITTEE
City Engineer Approval: PROVED CITY ENGINEER
Last Design Update: Mo./Day/Yr. Mo./Day/Yr.

City Project No. COA 681602
Zone Map No. A-10-Z
Sheet 3-11 Of

WILSON & COMPANY

X:\Public\PROJECTS\X21001202\T\2012DTL03.dwg 11/14/2005 8:53:11 AM MST

FACE OF CURB POINT TABLE		
POINT	NORTHING	EASTING
1	1533494.2470	360024.6518
2	1533483.6348	360021.1553
3	1533472.8526	359955.7609
4	1533556.3623	359877.6274
5	1533574.3779	359897.1326
6	1533586.1600	359932.0746

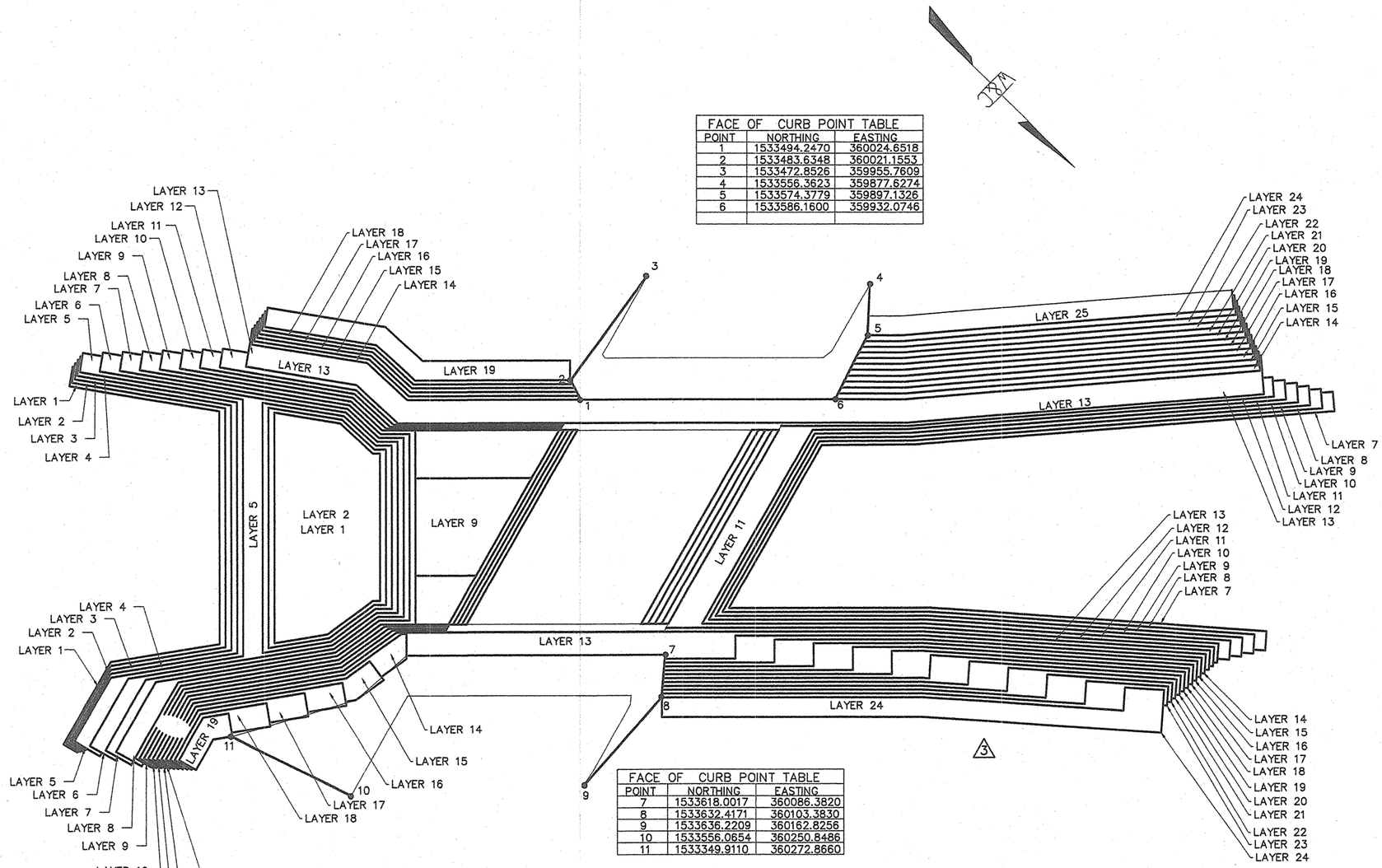

FACE OF CURB POINT TABLE		
POINT	NORTHING	EASTING
7	1533618.0017	360086.3820
8	1533632.4171	360103.3830
9	1533636.2209	360162.8256
10	1533556.0654	360250.8486
11	1533349.9110	360272.8660

3 GRADE CONTROL STRUCTURE 3

BENCH MARKS

THE STA. IS A USGS TABLET STAMPED "BLACK-2 1977" SET FLUSH W/ THE GROUND. THE STA. IS LOCATED 8.5 MI. N.W. OF DOWNTOWN ALBUQ. TO REACH THE STA. FROM THE INTX OF COORS/I-40 GO N. ON COORS 5.8 MI. TO PARADISE BLVD. TURN LEFT GO W. ON PARADISE BLVD. 1.1 MI. TO GOLF COURSE RD. TURN RIGHT GO N. ON GOLF COURSE RD. 1.3 MI. TO McMAHON BLVD. THE STA. IS ON THE LEFT.

N 1530241.52, E 372920.43

ELEVATION = 5213.926 FT. (2ND ORDER) (NGVD29)

AS-BUILT INFORMATION

CONTRACTOR David Martinez Const. Inc. DATE
SUBMITTED BY Billingsley Engr. DATE
INSPECTOR'S ACCEPTANCE CO.A DATE
FIELD VERIFICATION BY CO.A/WCI DATE
DRAWINGS CORRECTED BY WCI DATE 3/07
MICRO-FILM INFORMATION
RECORDED BY DATE
NO.

SURVEY INFORMATION

FIELD NOTES

NO.	BY	DATE

ENGINEER'S SEAL

ALBUQUERQUE, NEW MEXICO, 4955, REGISTERED PROFESSIONAL ENGINEER

NO.	DATE	REMARKS	BY
1	8-31-06	REVISED STRUCTURE	ELO
2	5-29-06	REVISED STRUCTURE	ELO
3	REVISED SHEET STRUCTURE MOD.		EEA

REVISIONS

WILSON & COMPANY, ENGINEERS & ARCHITECTS

DESIGNED BY	EEA	DATE NOV 2005
DRAWN BY	STAFF	DATE NOV 2005
CHECKED BY	EEA	DATE NOV 2005

CITY OF ALBUQUERQUE
DEPARTMENT OF MUNICIPAL DEVELOPMENT
TRANSPORTATION DIVISION

McMAHON BLVD. EXTENSION-CALABACILLAS BRIDGE
GRADE CONTROL STRUCTURE 3
LAYER DETAILS

Design Review Committee	City Engineer Approval	Last Design Update	Mo./Day/Yr.	Mo./Day/Yr.

City Project No.	Zone Map No.	Sheet	Of
COA 681602	A-10-Z	3-12	

WILSON & COMPANY

X:\Public\PROJECTS\X221001202\TY\2012DTL04.dwg 8/31/2006 10:42:31 AM MDT

LAYER 1

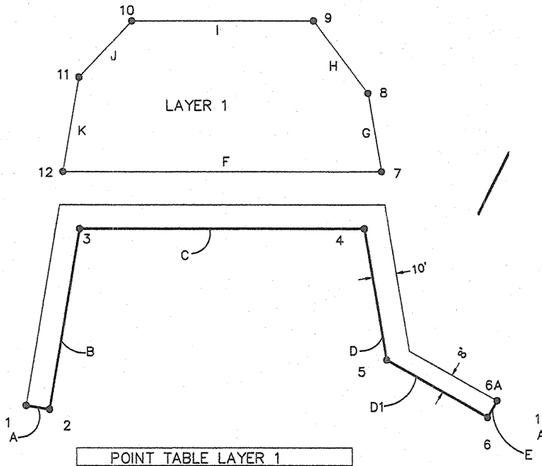

POINT TABLE LAYER 1		
POINT	NORTHING	EASTING
1	1533300.1071	360196.2172
2	1533305.9524	360204.3271
3	1533368.7321	360159.1511
4	1533453.5951	360243.4276
5	1533421.0916	360289.2678
6	1533434.2547	360336.2380
6A	1533441.9579	360334.0792
7	1533475.6755	360231.3050
8	1533495.4771	360203.3784
9	1533501.2767	360165.3933
10	1533447.0291	360111.5206
11	1533414.3588	360112.7663
12	1533380.7007	360136.9866

LAYER 2

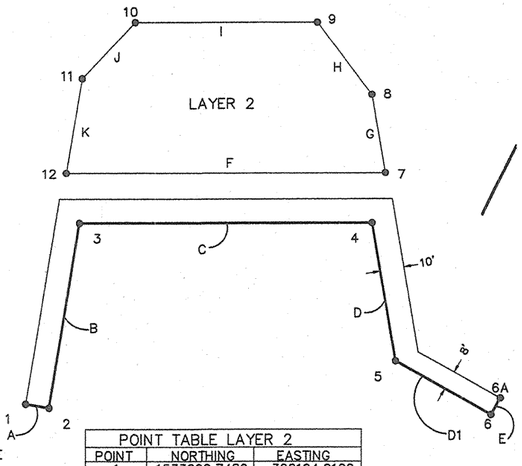

POINT TABLE LAYER 2		
POINT	NORTHING	EASTING
1	1533299.7489	360194.0100
2	1533305.5947	360202.1206
3	1533369.7621	360155.9459
4	1533456.7930	360242.3754
5	1533422.5305	360290.6963
6	1533434.9477	360335.0052
6A	1533442.6510	360332.8465
7	1533475.6755	360231.3050
8	1533495.4771	360203.3784
9	1533501.2767	360165.3933
10	1533447.0291	360111.5206
11	1533414.3588	360112.7663
12	1533380.7007	360136.9866

LAYERS 3 THRU 5 SOUTH

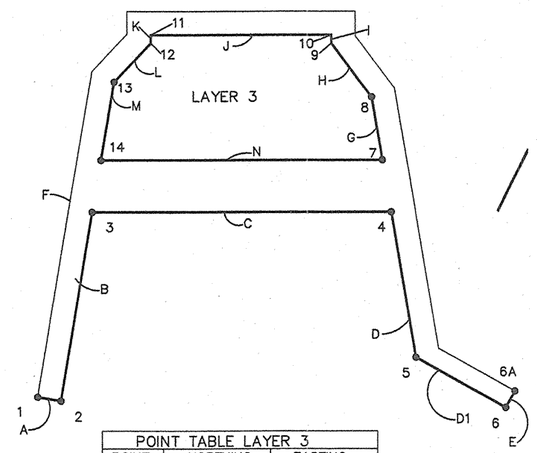

POINT TABLE LAYER 3		
POINT	NORTHING	EASTING
1	1533299.3907	360191.8028
2	1533305.2370	360199.9140
3	1533370.7920	360152.7408
4	1533459.9908	360241.3231
5	1533423.9693	360292.1248
6	1533435.6408	360333.7725
6A	1533443.3440	360331.6137
7	1533472.8915	360223.1292
8	1533488.8076	360200.6824
9	1533493.1274	360172.3893
10	1533495.7392	360169.7594
11	1533441.8702	360116.2627
12	1533439.3313	360118.8192
13	1533416.7344	360119.6808
14	1533388.8954	360139.7137

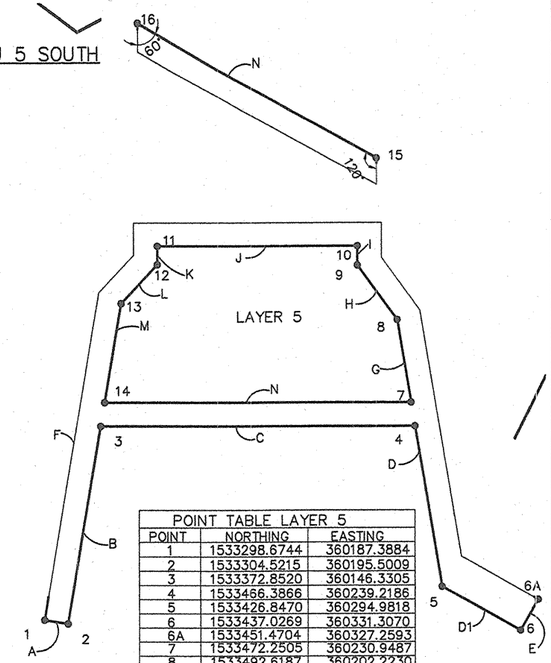

POINT TABLE LAYER 5		
POINT	NORTHING	EASTING
1	1533298.6744	360187.3884
2	1533304.5215	360195.5009
3	1533372.8520	360146.3305
4	1533466.3866	360239.2186
5	1533426.8470	360294.9818
6	1533437.0269	360331.3070
6A	1533451.4704	360327.2593
7	1533472.2505	360230.9487
8	1533492.6187	360202.2230
9	1533496.8848	360174.2824
10	1533502.8053	360168.3206
11	1533443.2599	360109.1867
12	1533437.6038	360114.8822
13	1533415.3769	360115.7296
14	1533381.0808	360140.4090
15	1533535.2441	360147.0092
16	1533504.2516	360036.4175

DIMENSION TABLE																					
LAYER	A	B	C	D	D1	E	F	G	H	I	J	K	L	M	N	O	ELEV	VOLUME(CY)
1	10'	77.34'	119.60'	56.19'	48.78'	8'	133.85'	34.23'	38.43'	76.45'	32.69'	41.17'					5343	391.14
2	10'	79.05'	122.66'	59.23'	46.01'	8'	133.85'	34.23'	38.43'	76.45'	32.69'	41.17'					5344	392.85
3	10'	80.76'	125.71'	62.28'	43.25	8'	139.39'	27.35'	28.62'	3.61'	75.92'	3.60'	22.61'	34.30'	118.38'		5345	259.68
4	10'	82.47'	128.77'	65.32'	40.49'	8'	139.99'	31.37	28.44'	6.05'	79.92'	5.81'	22.43'	38.28'	123.43'		5346	237.30
5	10'	84.18'	131.82'	68.36'	37.72'	15'	139.60'	22.87'	28.26'	8.40'	83.92'	8.03'	22.24'	42.09'	128.49'	114.85'	5347	222.20'

LAYERS 6 THRU 8 SOUTH

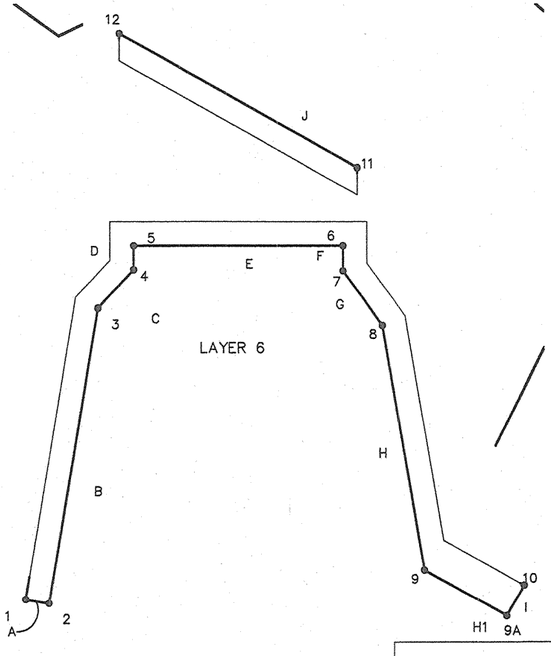

POINT TABLE LAYER 6		
POINT	NORTHING	EASTING
1	1533305.6218	360179.9251
2	1533311.4690	360188.0375
3	1533414.6982	360113.7541
4	1533436.7401	360112.9136
5	1533443.9547	360105.6488
6	1533506.3384	360167.6013
7	1533498.7634	360175.2290
8	1533494.5243	360202.9933
9	1533433.4963	360289.0620
9A	1533444.1904	360327.2224
10	1533458.6340	360323.1747
11	1533533.6242	360148.6404
12	1533502.6316	360038.0487

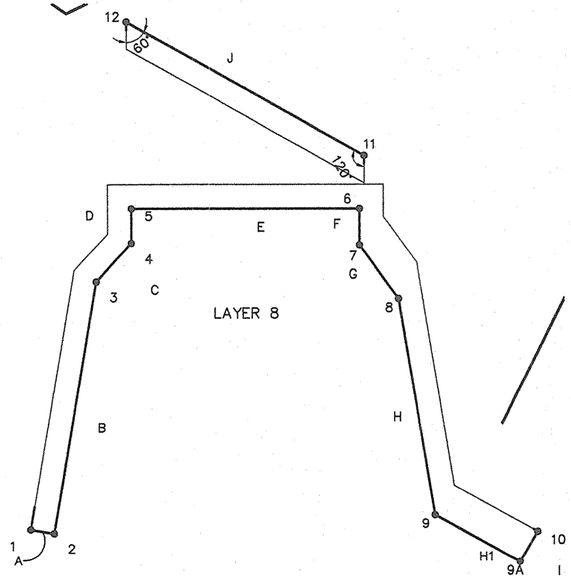

POINT TABLE LAYER 8		
POINT	NORTHING	EASTING
1	1533319.5168	360164.9983
2	1533325.3639	360173.1107
3	1533413.3407	360109.8029
4	1533435.0126	360108.9766
5	1533445.3444	360098.5728
6	1533513.4045	360166.1626
7	1533502.5207	360177.1221
8	1533498.3355	360204.5339
9	1533444.5617	360280.3718
9A	1533455.6288	360319.8628
10	1533470.0723	360315.8151
11	1533530.3844	360151.9028
12	1533499.3918	360041.3111

DIMENSION TABLE													
LAYER	A	B	C	D	E	F	G	H	H1	I	J	ELEV	VOLUME(CY)
6	10'	127.18'	22.06'	10.24'	87.92	10.75'	28.09'	105.51'	39.63'	15'	114.85'	5348	216.18
7	10'	117.78'	21.87'	12.45'	91.92'	13.10'	27.91'	97.31'	41.54'	15'	114.85'	5349	211.68
8	10'	108.39'	21.69'	14.66'	95.92'	15.45'	27.73'	92.97'	40.01'	15'	110.59'	5350	214.08

AS-BUILT INFORMATION
CONTRACTOR David Nonteya Const. Inc. DATE
WORK STAKED BY Ballingley Engr. DATE
INSPECTOR'S ACCEPTANCE BY COA DATE
FIELD VERIFICATION BY COA / WCL DATE
DRAWINGS CORRECTED BY WCL DATE 3/07
MICRO-FILM INFORMATION
RECORDED BY DATE
NO.

BENCH MARKS
THE STA. IS A USGS TABLET STAMPED "BLACK-2 1977" SET FLUSH W/ THE GROUND. THE STA. IS LOCATED 8.5 MI. N.W. OF DOWNTOWN ALBUQ. TO REACH THE STA. FROM THE INTX OF COORS/I-40 GO N. ON COORS 5.8 MI. TO PARADISE BLVD. TURN LEFT GO W. ON PARADISE BLVD. 1.1 MI. TO GOLF COURSE RD. TURN RIGHT GO N. ON GOLF COURSE RD. 1.3 MI. TO McMAHON BLVD. THE STA. IS ON THE LEFT.
N 1530241.52, E 372920.43
ELEVATION = 5213.926 FT. (2ND ORDER) (NGVD29)

SURVEY INFORMATION
FIELD NOTES
NO. | BY | DATE

ENGINEER'S SEAL

NO.	DATE	REMARKS	BY
1	8-31-06	REVISED STRUCTURE	ELO
2		REVISED SHEET STRUCTURE MOD.	EEA

REVISIONS

WILSON & COMPANY, ENGINEERS & ARCHITECTS
DESIGNED BY EEA DATE NOV 2005
DRAWN BY STAFF DATE NOV 2005
CHECKED BY EEA DATE NOV 2005

CITY OF ALBUQUERQUE
DEPARTMENT OF MUNICIPAL DEVELOPMENT
TRANSPORTATION DIVISION

McMAHON BLVD. EXTENSION–CALABACILLAS BRIDGE
GRADE CONTROL STRUCTURE 3
LAYER DETAILS

Design Review Committee | City Engineer Approval | Last Design Update | Mo./Day/Yr. | Mo./Day/Yr.

City Project No. COA 681602 | Zone Map No. A-10-Z | Sheet 3-13 Of

WILSON & COMPANY

X:\Public\PROJECTS\X22100120\T\2012DTL04.dwg 8/31/2006 10:45:48 AM MDT

△7 LAYER 9 SOUTH

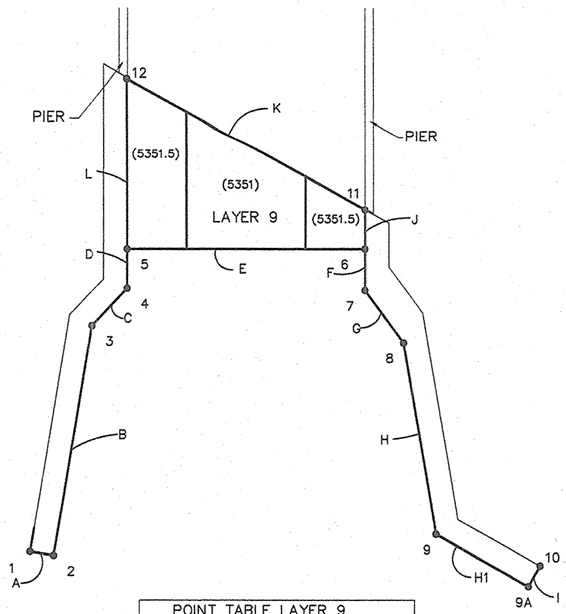

POINT TABLE LAYER 9		
POINT	NORTHING	EASTING
1	1533326.4393	360157.4458
2	1533332.2864	360165.5582
3	1533412.5048	360107.8333
4	1533434.1488	360107.0081
5	1533446.0393	360095.0349
6	1533516.9376	360165.4432
7	1533504.3994	360178.0686
8	1533500.2652	360205.1457
9	1533452.6746	360272.2633
9A	1533464.7181	360315.2385
10	1533474.3472	360312.5400
11	1533528.7644	360153.5340
12	1533497.7719	360042.9423

DIMENSION TABLE													
LAYER	A	B	C	D	E	F	G	H	H1	I	J	ELEV	VOLUME(CY)
9	10'	98.83'	21.66'	16.87'	100'	17.79'	27.39'	82.28'	44.63'	10'	16.78'	5351.0	
	K	L											
9	114.85'	73.42'											307.60

LAYERS 10 AND 11 SOUTH

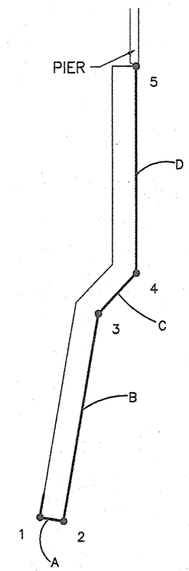

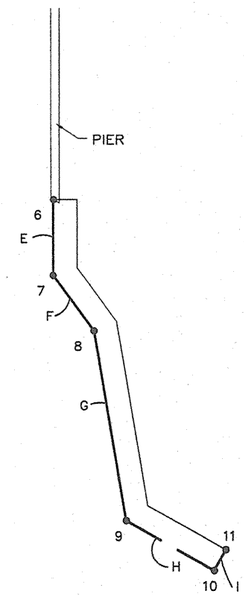

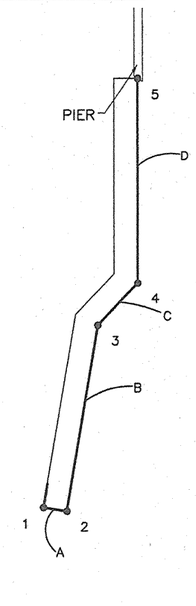

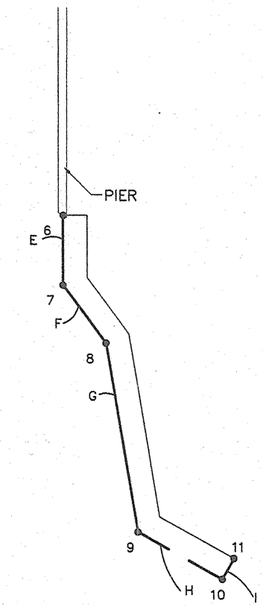

POINT TABLE LAYER 10		
POINT	NORTHING	EASTING
1	1533333.4117	360150.0716
2	1533339.1824	360158.0780
3	1533411.7470	360105.8608
4	1533435.1039	360104.9702
5	1533497.8914	360041.7458
6	1533529.4293	360154.2837
7	1533506.5341	360177.3382
8	1533502.1466	360206.0744
9	1533454.8828	360272.7312
10	1533466.3741	360313.7359
11	1533476.0031	360311.0374

POINT TABLE LAYER 11		
POINT	NORTHING	EASTING
1	1533340.3592	360142.6082
2	1533346.1299	360150.6146
3	1533411.0682	360103.8852
4	1533435.7050	360102.9458
5	1533497.5812	360040.6390
6	1533529.7395	360155.3905
7	1533508.6688	360176.6078
8	1533504.0522	360206.8447
9	1533457.0660	360273.1100
10	1533468.0300	360312.2333
11	1533477.6591	360309.5348

DIMENSION TABLE												
LAYER	A	B	C	D	E	F	G	H	I	ELEV	VOLUME(CY)
10	9.87'	89.40'	23.37'	89.10'	32.49'	29.07'	80.21'	42.58'	10'	5352	141.17
11	9.87'	80.00'	24.65'	87.81'	29.90'	30.59'	81.23'	40.63'	10'	5353	135.99

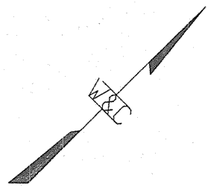

AS-BUILT INFORMATION

CONTRACTOR David Montoya Const. Inc.
WORK STAKED BY Billingsley Engr.
INSPECTOR'S ACCEPTANCE BY C.O.A.
FIELD VERIFICATION BY COA/WCI
DRAWINGS CORRECTED BY WCI
RECORDED BY MICRO-FILM INFORMATION
NO. DATE 5/03

BENCH MARKS

THE STA. IS A USGS TABLET STAMPED "BLACK-2 1977" SET FLUSH W/ THE GROUND. THE STA. IS LOCATED 8.5 MI. N.W. OF DOWNTOWN ALBUQ. TO REACH THE STA. FROM THE INTX OF COORS/I-40 GO N. ON COORS 5.8 MI. TO PARADISE BLVD. TURN LEFT GO W. ON PARADISE BLVD. 1.1 MI. TO GOLF COURSE RD. TURN RIGHT GO N. ON GOLF COURSE RD. 1.3 MI. TO McMAHON BLVD. THE STA. IS ON THE LEFT.
N 1530241.52, E 372920.43
ELEVATION = 5213.926 FT. (2ND ORDER) (NGVD29)

SURVEY INFORMATION

FIELD NOTES

NO.	BY	DATE

ENGINEER'S SEAL

REVISIONS

NO.	DATE	REMARKS	BY
1	8-31-06	REVISED STRUCTURE	ELO
2		REVISED SHEET STRUCTURE MOD.	EEA

WILSON & COMPANY, ENGINEERS & ARCHITECTS
DESIGNED BY EEA DATE NOV 2005
DRAWN BY STAFF DATE NOV 2005
CHECKED BY EEA DATE NOV 2005

CITY OF ALBUQUERQUE
DEPARTMENT OF MUNICIPAL DEVELOPMENT
TRANSPORTATION DIVISION

McMAHON BLVD. EXTENSION–CALABACILLAS BRIDGE
GRADE CONTROL STRUCTURE 3
LAYER DETAILS

Design Review Committee	City Engineer Approval	Last Design Update	Mo./Day/Yr.	Mo./Day/Yr.

City Project No.	Zone Map No.	Sheet	Of
COA 681602	A-10-Z	3-14	

WILSON & COMPANY

X:\Public\PROJECTS\X221001202\T\2012DTL04.dwg 8/31/2006 10:45:48 AM MDT

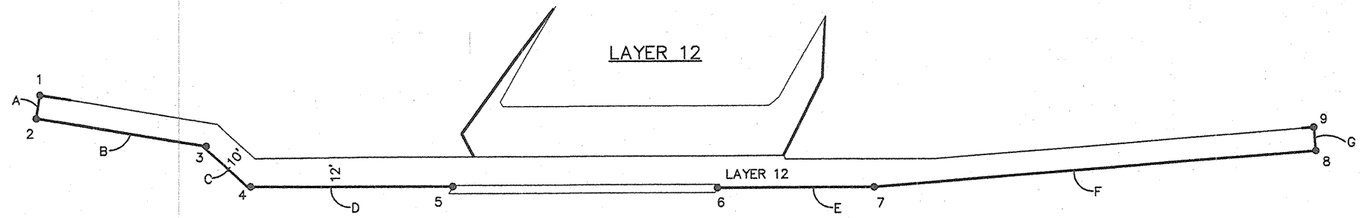

3

POINT TABLE LAYER 12		
POINT	NORTHING	EASTING
1	1533347.2303	360135.0388
2	1533353.0774	360143.1512
3	1533411.8303	360100.8728
4	1533437.3385	360099.8818
5	1533497.2710	360039.5322
6	1533576.1474	359961.5260
7	1533622.4681	359914.8829
8	1533704.4554	359813.4521
9	1533735.2669	359766.2141
10	1533479.3150	360308.0323
10A	1533469.6860	360310.7307
11	1533459.2492	360273.4887
12	1533507.2469	360205.7969
13	1533511.9988	360174.6737
14	1533530.0497	360156.4973
15	1533608.3056	360076.2775
16	1533700.6586	359983.2818
17	1533812.6995	359885.0163
18	1533819.2699	359892.5543

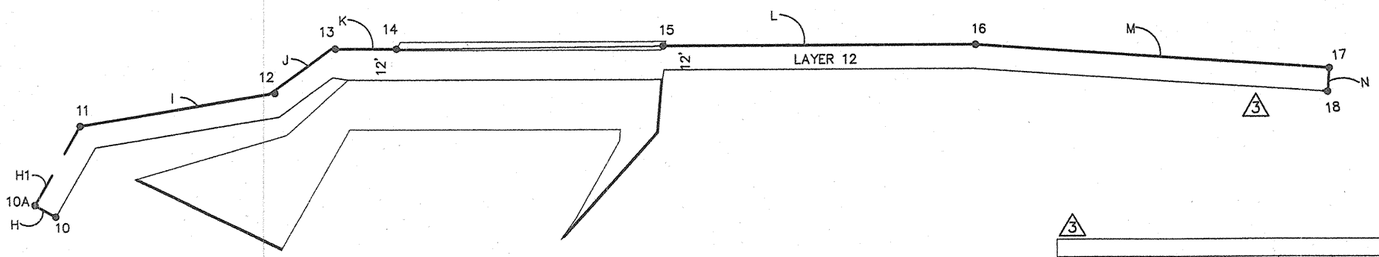

3

DIMENSION TABLE																	
LAYER	A	B	C	D	E	F	G	H	H1	I	J	K	L	M	N	ELEV	VOLUME(CY)
12	10'	72.38'	25.53'	85.05'	65.74'	186.34'	10'	10'	38.68'	82.98'	31.48'	25.62'	131.06'	149.03'	10'	5354	421.23

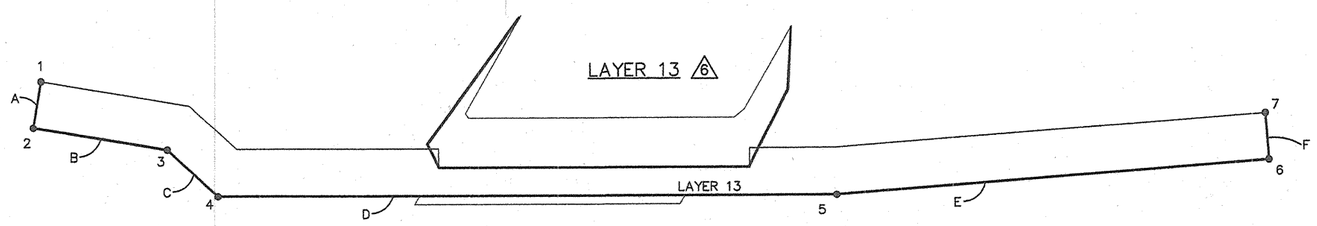

3 7

POINT TABLE LAYER 12		
POINT	NORTHING	EASTING
1	1533350.4797	360117.1527
2	1533362.1740	360133.3775
3	1533408.5899	360099.9768
4	1533437.4564	360098.8761
5	1533620.4949	359914.5638
6	1533738.4562	359775.4750
7	1533723.2032	359762.5389
8	1533480.9710	360306.5297
8A	1533471.3420	360309.2281
9	1533461.4324	360273.8675
10	1533507.9373	360207.9006
11	1533513.0342	360174.5181
12	1533702.0777	359984.6911
13	1533812.5033	359887.8350
14	1533819.0822	359895.3829

3 7

DIMENSION TABLE															
LAYER	A	B	C	D	E	F	G	G1	H	I	J	K	L	ELEV	VOLUME(CY)
13	20'	57.18'	28.89'	259.76'	182.38'	20'	10'	36.72'	80.71'	33.77'	267.90'	146.88'	10'	5355	595.25

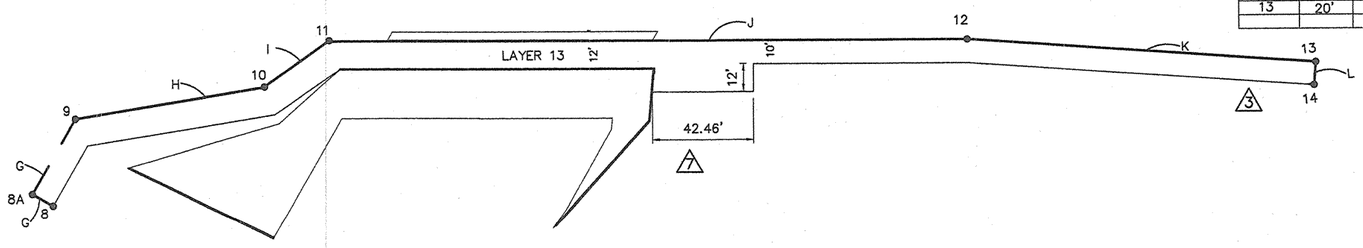

AS-BUILT INFORMATION

CONTRACTOR: David Heritage Const. Inc. DATE
PROJECT ENGINEER: Billingsley Eng. DATE
INSPECTOR'S ACCEPTANCE BY: COA DATE
FIELD VERIFICATION BY: COA/WCI DATE
DRAWINGS CORRECTED BY: WCI DATE 3/03
RECORDED BY: MICRO-FILM INFORMATION DATE
NO.

BENCH MARKS

THE STA. IS A USGS TABLET STAMPED 'BLACK-2 1977' SET FLUSH W/ THE GROUND. THE STA. IS LOCATED 8.5 MI. N.W. OF DOWNTOWN ALBUQ. TO REACH THE STA. FROM THE INTX OF COORS/I-40 GO N. ON COORS 5.8 MI. TO PARADISE BLVD. TURN LEFT GO W. ON PARADISE BLVD. 1.1 MI. TO GOLF COURSE RD. TURN RIGHT GO N. ON GOLF COURSE RD. 1.3 MI. TO McMAHON BLVD. THE STA. IS ON THE LEFT.

N 1530241.52, E 372920.43

ELEVATION = 5213.926 FT. (2ND ORDER) (NGVD29)

SURVEY INFORMATION

FIELD NOTES

NO.	BY	DATE

ENGINEER'S SEAL

NO.	DATE	REMARKS	BY
1	8-31-06	REVISED STRUCTURE	ELO
2	5-29-06	REVISED STRUCTURE	ELO
3		REVISED SHEET STRUCTURE MOD.	EEA

REVISIONS

WILSON & COMPANY, ENGINEERS & ARCHITECTS

DESIGNED BY EEA DATE NOV 2005
DRAWN BY STAFF DATE NOV 2005
CHECKED BY EEA DATE NOV 2005

CITY OF ALBUQUERQUE
DEPARTMENT OF MUNICIPAL DEVELOPMENT
TRANSPORTATION DIVISION

McMAHON BLVD. EXTENSION-CALABACILLAS BRIDGE
GRADE CONTROL STRUCTURE 3
LAYER DETAILS

Design Review Committee	City Engineer Approval	Last Design Update	Mo./Day/Yr.	Mo./Day/Yr.

City Project No.	Zone Map No.	Sheet	Of
COA 681602	A-10-Z	3-15	

WILSON & COMPANY

X:\Public\PROJECTS\X2210012021\T\2012DTL04.dwg 8/31/2006 10:45:48 AM MDT

7 LAYERS 14 THRU 19 SOUTH

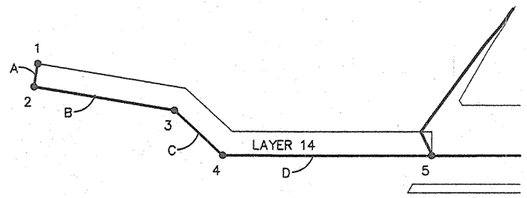

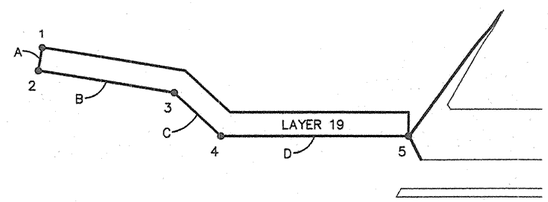

POINT TABLE LAYER 14		
POINT	NORTHING	EASTING
1	1533350.1249	360114.9450
2	1533355.9658	360123.0619
3	1533404.5188	360088.1233
4	1533432.2739	360087.0650
5	1533494.2470	360024.6518

POINT TABLE LAYER 19		
POINT	NORTHING	EASTING
1	1533348.3215	360103.9180
2	1533354.1686	360112.0304
3	1533401.1182	360078.2457
4	1533427.9551	360077.2224
5	1533483.6348	360021.1553

DIMENSION TABLE						
LAYER	A	B	C	D	ELEV	VOLUME(CY)
14	10'	59.82'	27.77'	87.96'	5356	64.59
15	10'	59.42'	27.59'	86.17'	5357	63.88'
16	10'	59.03'	27.41'	84.38'	5358	63.00'
17	10'	58.64'	27.22'	82.59'	5359	62.12'
18	10'	58.24'	27.04'	80.80'	5360	61.25'
19	10'	57.84'	26.87'	79.02'	5361	60.27'

LAYERS 14 NORTH

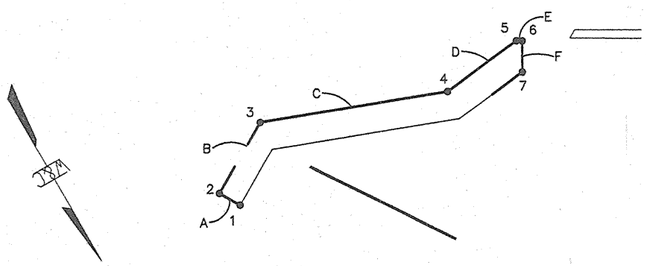

LAYERS 15 NORTH

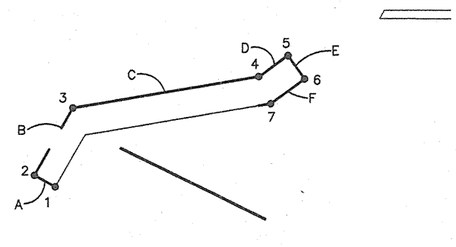

POINT TABLE LAYER 14 NORTH		
POINT	NORTHING	EASTING
1	1533482.6270	360305.0271
2	1533472.9979	360307.7255
3	1533463.6156	360274.2462
4	1533509.7689	360209.1556
5	1533515.1689	360173.7877
6	1533516.9100	360172.0345
7	1533526.1714	360181.2319

POINT TABLE LAYER 15 NORTH		
POINT	NORTHING	EASTING
1	1533336.6453	360087.6840
2	1533342.4862	360095.8009
3	1533393.5849	360059.0304
4	1533437.7182	360060.2956
5	1533464.1915	360033.6382
6	1533516.9100	360172.0345
7	1533526.1714	360181.2319

DIMENSION TABLE								
LAYER	A	B	C	D	E	F	ELEV	VOLUME(CY)
14 N	10'	34.77'	79.79'	35.78'	2.47'	13.05'	5356	62.78
15 N	10'	32.82	79.31'	14.81'	12.00'		5357	53.19

LAYERS 16 NORTH

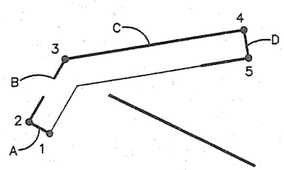

LAYERS 17 NORTH

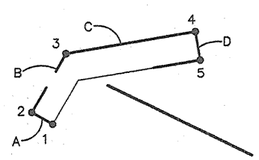

POINT TABLE LAYER 16 NORTH		
POINT	NORTHING	EASTING
1	1533485.9389	360302.0219
2	1533476.3098	360304.7203
3	1533467.9820	360275.0037
4	1533511.9476	360212.9984
5	1533521.7365	360219.9394

POINT TABLE LAYER 17 NORTH		
POINT	NORTHING	EASTING
1	1533487.5948	360300.5193
2	1533477.9658	360303.2177
3	1533470.1652	360275.3825
4	1533502.0108	360230.4701
5	1533511.7997	360237.4111

DIMENSION TABLE						
LAYER	A	B	C	D	ELEV	VOLUME(CY)
16 N	10'	30.86'	76.01'	12.00'	5358	43.15
17 N	10'	28.91'	55.06'	12.00'	5359	33.12

LAYERS 18 NORTH

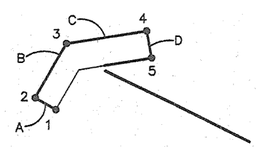

LAYERS 19 NORTH

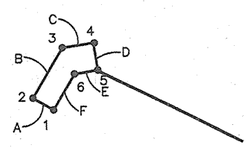

POINT TABLE LAYER 18 NORTH		
POINT	NORTHING	EASTING
1	1533489.2508	360299.0167
2	1533479.6218	360301.7151
3	1533472.3484	360275.7612
4	1533492.0740	360247.9419
5	1533501.8629	360254.8828

POINT TABLE LAYER 19 NORTH		
POINT	NORTHING	EASTING
1	1533490.9068	360297.5141
2	1533481.2777	360300.2125
3	1533474.5315	360276.1400
4	1533482.1372	360265.4136
5	1533491.9262	360272.3545
6	1533486.1420	360280.5120

DIMENSION TABLE								
LAYER	A	B	C	D	E	F	ELEV	VOLUME(CY)
18 N	10'	26.95'	34.10'	12.00'			5360	23.08
19 N	10'	25.00'	13.15'	12.00'	10.00'	17.66'	5361	13.04

AS-BUILT INFORMATION
CONTRACTOR David Romero Const. Inc.
WORK STAKED BY Billingsley Engr. DATE
INSPECTOR'S ACCEPTANCE BY CJA DATE
FIELD VERIFICATION BY COA/WCI DATE
DRAWINGS CORRECTED BY WCI DATE 5/07
RECORDED BY MICRO-FILM INFORMATION DATE
NO.

BENCH MARKS
THE STA. IS A USGS TABLET STAMPED 'BLACK-2 1977' SET FLUSH W/ THE GROUND. THE STA. IS LOCATED 8.5 MI. N.W. OF DOWNTOWN ALBUQ. TO REACH THE STA. FROM THE INTX OF COORS/I-40 GO N. ON COORS 5.8 MI. TO PARADISE BLVD. TURN LEFT GO W. ON PARADISE BLVD. 1.1 MI. TO GOLF COURSE RD. TURN RIGHT GO N. ON GOLF COURSE RD. 1.3 MI. TO McMAHON BLVD. THE STA. IS ON THE LEFT.
N 1530241.52, E 372920.43
ELEVATION = 5213.926 FT. (2ND ORDER) (NGVD29)

SURVEY INFORMATION
FIELD NOTES

NO.	BY	DATE

ENGINEER'S SEAL

NO.	DATE	REMARKS	BY
1	8-31-06	REVISED STRUCTURE	ELO
2		REVISED SHEET STRUCTURE MOD.	EEA

REVISIONS

WILSON & COMPANY, ENGINEERS & ARCHITECTS
DESIGNED BY EEA DATE NOV 2005
DRAWN BY STAFF DATE NOV 2005
CHECKED BY EEA DATE NOV 2005

CITY OF ALBUQUERQUE
DEPARTMENT OF MUNICIPAL DEVELOPMENT
TRANSPORTATION DIVISION

McMAHON BLVD. EXTENSION-CALABACILLAS BRIDGE
GRADE CONTROL STRUCTURE 3
LAYER DETAILS

Design Review Committee | City Engineer Approval | Last Design Update | Mo./Day/Yr. | Mo./Day/Yr.

City Project No. COA 681602 | Zone Map No. A-10-Z | Sheet 3-16 Of

WILSON & COMPANY

X:\Public\PROJECTS\X221001202\T\2012DTL04.dwg 8/31/2006 11:10:30 AM MDT

7 3 LAYERS 7 THRU 11 NORTH

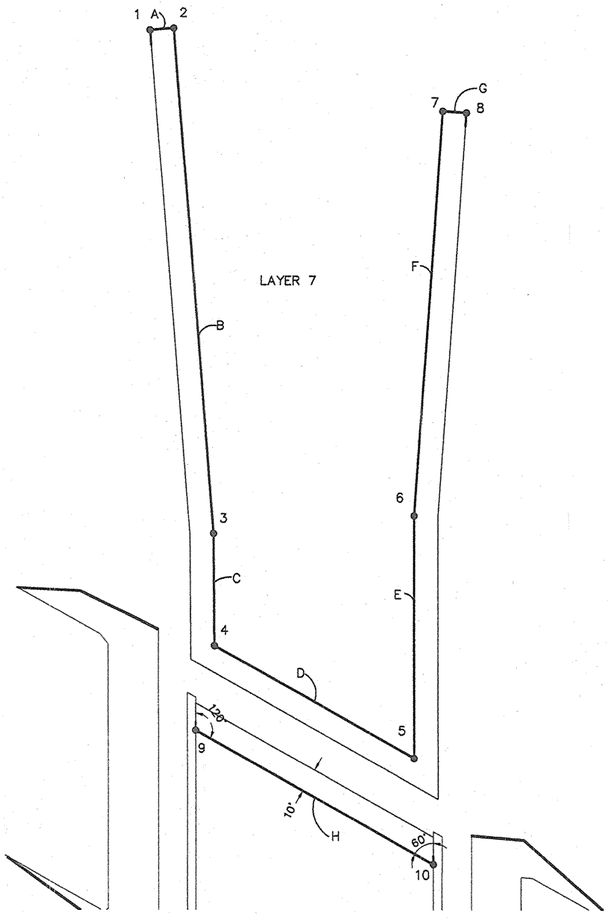

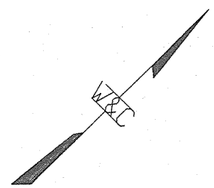

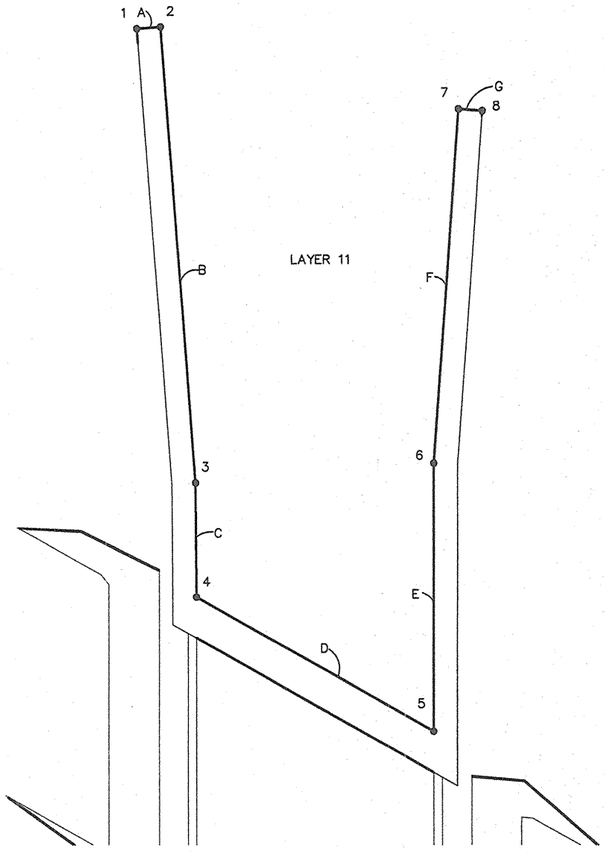

3 7

POINT TABLE LAYER 7		
POINT	NORTHING	EASTING
1	1533762.2976	359749.8025
2	1533769.9242	359756.2706
3	1533631.1854	359919.6964
4	1533597.8666	359953.7938
5	1533623.8330	360046.4507
6	1533696.3285	359973.4506
7	1533825.6846	359860.3635
8	1533832.2701	359867.8883
9	1533567.0482	359973.5268
10	1533597.9658	360083.8511

3 7

POINT TABLE LAYER 11		
POINT	NORTHING	EASTING
1	1533740.6730	359762.9318
2	1533748.2996	359769.3998
3	1533622.9664	359916.6608
4	1533588.9171	359951.5057
5	1533619.8347	360061.8299
6	1533699.7878	359981.3204
7	1533812.8887	359882.1910
8	1533819.4628	359889.7258

3 7

DIMENSION TABLE										
LAYER	A	B	C	D	E	F	G	H	ELEV	VOLUME(CY)
7	10'	214.37'	47.67'	96.23'	102.88'	171.82'	10'	114.57'	5349	285.10
8	10'	209.12'	47.94'	100.82'	105.52'	166.47'	10'	114.57'	5350	283.95
9	10'	203.88'	48.20'	105.40'	108.17'	161.11'	10'	114.57'	5351	282.79
10	10'	198.63'	48.46'	109.98'	110.81'	155.76'	10'	114.57'	5352	281.64
11	10'	193.38'	48.72'	114.57'	113.47'	150.39'	10'		5353	263.62

AS-BUILT INFORMATION

CONTRACTOR David Montoya Const. Inc.
WORK STAKED BY Billingsley Engr. DATE
INSPECTOR'S ACCEPTANCE BY COA DATE
FIELD VERIFICATION BY COA/WC DATE
DRAWINGS CORRECTED BY WC DATE 3/07

MICRO-FILM INFORMATION

RECORDED BY DATE
NO.

BENCH MARKS

THE STA. IS A USGS TABLET STAMPED 'BLACK-2 1977' SET FLUSH W/ THE GROUND. THE STA. IS LOCATED 8.5 MI. N.W. OF DOWNTOWN ALBUQ. TO REACH THE STA. FROM THE INTX OF COORS/I-40 GO N. ON COORS 5.8 MI. TO PARADISE BLVD. TURN LEFT GO W. ON PARADISE BLVD. 1.1 MI. TO GOLF COURSE RD. TURN RIGHT GO N. ON GOLF COURSE RD. 1.3 MI. TO McMAHON BLVD. THE STA. IS ON THE LEFT.

N 1530241.52, E 372920.43

ELEVATION = 5213.928 FT. (2ND ORDER) (NGVD29)

SURVEY INFORMATION

FIELD NOTES		
NO.	BY	DATE

ENGINEER'S SEAL

REVISIONS

NO.	DATE	REMARKS	BY
1	8-31-06	REVISED STRUCTURE	ELO
2	5-30-06	REVISED STRUCTURE	ELO
3		REVISED SHEET STRUCTURE MOD.	EEA

WILSON & COMPANY, ENGINEERS & ARCHITECTS

DESIGNED BY EEA DATE NOV 2005
DRAWN BY STAFF DATE NOV 2005
CHECKED BY EEA DATE NOV 2005

CITY OF ALBUQUERQUE
DEPARTMENT OF MUNICIPAL DEVELOPMENT
TRANSPORTATION DIVISION

McMAHON BLVD. EXTENSION-CALABACILLAS BRIDGE
GRADE CONTROL STRUCTURE 3
LAYER DETAILS

Design Review Committee	City Engineer Approval	Last Design Update	Mo./Day/Yr.	Mo./Day/Yr.

City Project No.	Zone Map No.	Sheet	Of
COA 681602	A-10-Z	3-17	

WILSON & COMPANY

X:\Public\PROJECTS\X22100120Z\T\2012DTL04.dwg 8/31/2006 11:10:30 AM MDT

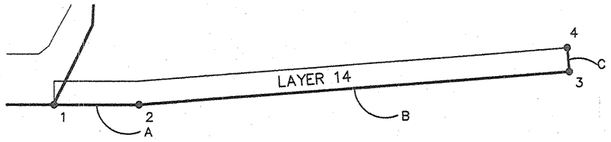

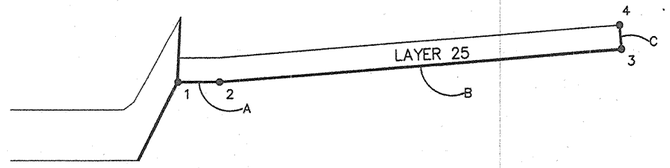

POINT TABLE LAYER 14		
POINT	NORTHING	EASTING
1	1533586.1600	359932.0746
2	1533611.2516	359906.8017
3	1533728.6042	359768.4307
4	1533720.9777	359761.9627

DIMENSION TABLE					
LAYER	A	B	C	ELEV	VOLUME(CY)
14	35.62'	181.43'	10'	5356	80.28
15	33.65'	180.67'	10'	5357	79.31
16	32.03'	179.56'	10'	5358	78.29
17	30.41'	178.44'	10'	5359	77.28
18	28.80'	177.32'	10'	5360	76.27
19	27.18'	176.20'	10'	5361	75.26
20	25.56'	175.09'	10'	5362	74.24
21	23.94'	173.97'	10'	5363	73.23
22	22.33'	172.85'	10'	5364	72.30
23	20.71'	171.73'	10'	5365	71.34
24	19.09'	170.61'	10'	5366	70.60
25	17.47'	169.50'	10'	5367	70.02

7 LAYERS 14 THRU 23 NORTH
WESTSIDE OF ARROYO

POINT TABLE LAYER 25		
POINT	NORTHING	EASTING
1	1533574.3779	359897.1326
2	1533586.6904	359884.7421
3	1533696.3218	359755.4753
4	1533688.6952	359749.0072

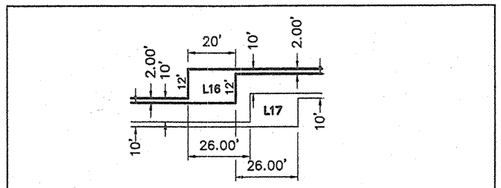

TYPICAL TRAIL LIFTS
PLAN VIEW

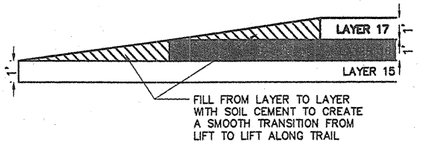

TYPICAL TRAIL LIFTS
SECTION VIEW

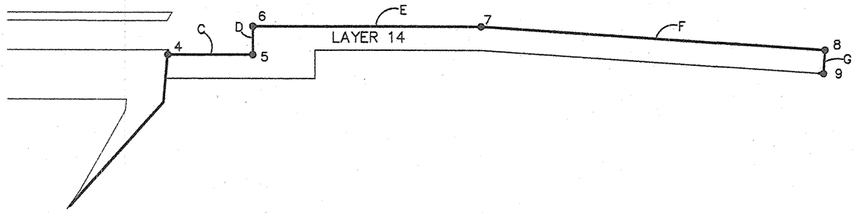

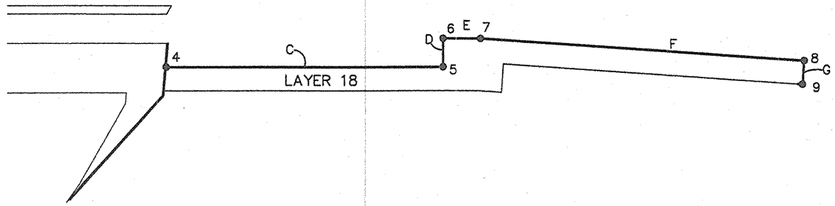

POINT TABLE LAYER 14		
POINT	NORTHING	EASTING
4	1533619.2999	360087.9131
5	1533644.5092	360062.5283
6	1533635.9945	360054.0725
7	1533703.4592	359986.1383
8	1533812.3127	359890.6603
9	1533818.9010	359898.1832

DIMENSION TABLE							
LAYER	C	D	E	F	G	ELEV	VOLUME(CY)
14	35.76'	12'	95.74'	144.79'	10'	5356	113.92
15	55.95'	12'	75.68'	142.71'	10'	5357	113.19
16	76.12'	12'	55.76'	140.48'	10'	5358	112.46
17	96.29'	12'	35.72'	138.39'	10'	5359	111.73
18	116.46'	12'	15.66'	136.30'	10'	5360	110.51

7 3 LAYERS 14 THRU 18 NORTH
EASTSIDE OF ARROYO

POINT TABLE LAYER 18		
POINT	NORTHING	EASTING
4	1533624.4927	360094.0373
5	1533706.5577	360011.4011
6	1533698.0430	360002.9453
7	1533709.0788	359991.8327
8	1533811.5476	359901.9549
9	1533818.1359	359909.4778

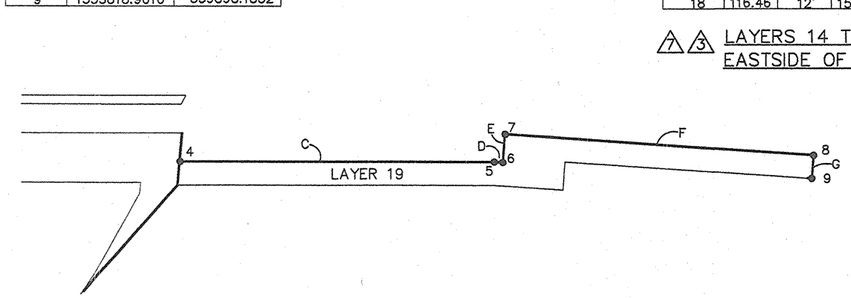

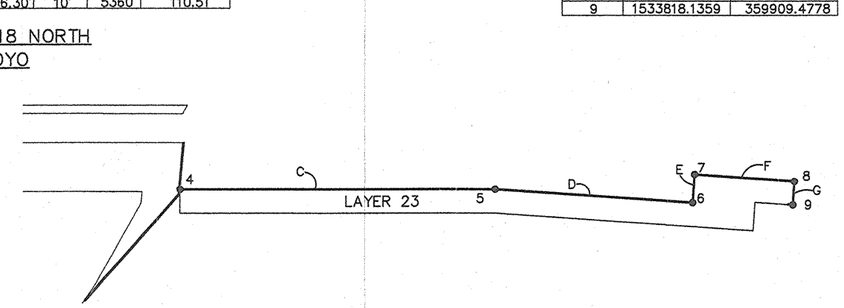

POINT TABLE LAYER 19		
POINT	NORTHING	EASTING
4	1533625.7909	360095.5683
5	1533718.7783	360001.9337
6	1533721.5664	359999.4882
7	1533713.6535	359990.4668
8	1533811.3514	359904.7736
9	1533817.9397	359912.2966

DIMENSION TABLE							
LAYER	C	D	E	F	G	ELEV	VOLUME(CY)
19	131.96'	3.71'	12'	129.95'	10'	5361	109.97
20	132.09'	23.62'	12'	107.95'	10'	5362	109.23'
21	132.20'	43.54'	12'	85.94'	10'	5363	108.50'
22	132.46'	63.32'	12'	53.94'	10'	5364	107.44'
23	132.58'	83.23'	12'	41.93'	10'	5365	107.04

7 3 LAYERS 19 THRU 23 NORTH
EASTSIDE OF ARROYO

POINT TABLE LAYER 23		
POINT	NORTHING	EASTING
4	1533630.9837	360101.6925
5	1533724.4071	360007.6189
6	1533786.9751	359952.7390
7	1533779.0622	359943.7176
8	1533810.5850	359916.0682
9	1533817.1733	359923.5912

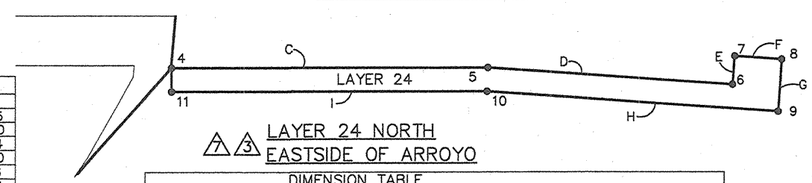

7 3 LAYER 24 NORTH
EASTSIDE OF ARROYO

POINT TABLE LAYER 24		
POINT	NORTHING	EASTING
4	1533632.2819	360103.2235
5	1533725.7777	360009.0770
6	1533803.3296	359941.0544
7	1533795.4167	359932.0330
8	1533810.3991	359918.8916
9	1533824.8933	359935.4421
10	1533732.6306	360016.3679
11	1533639.3774	360110.2700

DIMENSION TABLE									
LAYER	C	D	E	F	G	H	I	ELEV	VOLUME(CY)
24	132.68'	103.16'	12'	19.93'	22.00'	122.72'	132.34'	5366	103.45

AS-BUILT INFORMATION
CONTRACTOR David Martinez Const. Inc.
WORK STAKED BY Billingsley Engr DATE
INSPECTOR'S FIELD VERIFICATION BY COA/WCI DATE
AS-BUILT MARKUP BY COA/WCI DATE 3/07
REVIEWED & CORRECTED BY WCI
MICRO-FILM INFORMATION
RECORDED BY DATE
NO.

BENCH MARKS
THE STA. IS A USGS TABLET STAMPED "BLACK-2 1977" SET FLUSH W/ THE GROUND. THE STA. IS LOCATED 8.5 MI. N.W. OF DOWNTOWN ALBUQ. TO REACH THE STA. FROM THE INTX OF COORS/I-40 GO N. ON COORS 5.8 MI. TO PARADISE BLVD. TURN LEFT GO W. ON PARADISE BLVD. 1.1 MI. TO GOLF COURSE RD. TURN RIGHT GO N. ON GOLF COURSE RD. 1.3 MI. TO McMAHON BLVD. THE STA. IS ON THE LEFT.
N 1530241.52, E 372920.43
ELEVATION = 5213.926 FT. (2ND ORDER) (NGVD29)

SURVEY INFORMATION
FIELD NOTES

NO.	BY	DATE

ENGINEER'S SEAL

NO.	DATE	REMARKS	BY
7	8-31-06	REVISED STRUCTURE	ELO
6	5-30-06	REVISED STRUCTURE	ELO
4		REVISED SHEET STRUCTURE MOD.	EEA

REVISIONS

WILSON & COMPANY, ENGINEERS & ARCHITECTS
DESIGNED BY EEA DATE NOV 2005
DRAWN BY STAFF DATE NOV 2005
CHECKED BY EEA DATE NOV 2005

CITY OF ALBUQUERQUE
DEPARTMENT OF MUNICIPAL DEVELOPMENT
TRANSPORTATION DIVISION

McMAHON BLVD. EXTENSION-CALABACILLAS BRIDGE
GRADE CONTROL STRUCTURE 3
LAYER DETAILS

Design Review Committee	City Engineer Approval	Last Design Update	Mo./Day/Yr.	Mo./Day/Yr.

City Project No. COA 681602
Zone Map No. A-10-Z
Sheet 3-18 Of

WILSON & COMPANY

X:\Public\PROJECTS\X21001202\T\2012DTL04.dwg 8/31/2006 11:10:30 AM MDT

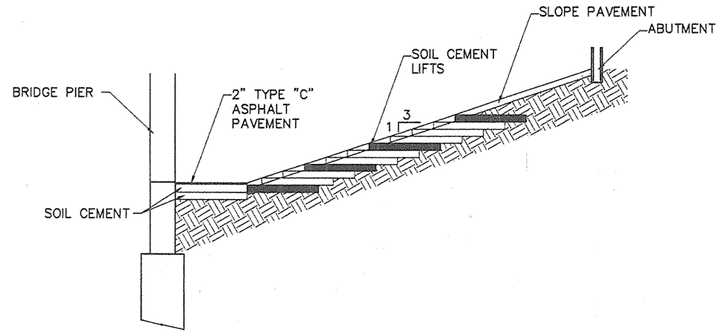

SOIL CEMENT ALONG SLOPE PAVEMENT
NTS

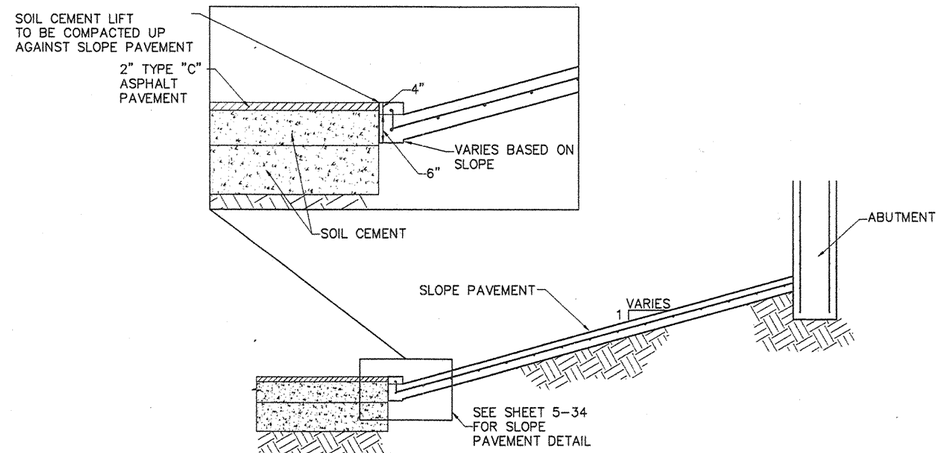

SOIL CEMENT AT END OF SLOPE PAVEMENT
NTS

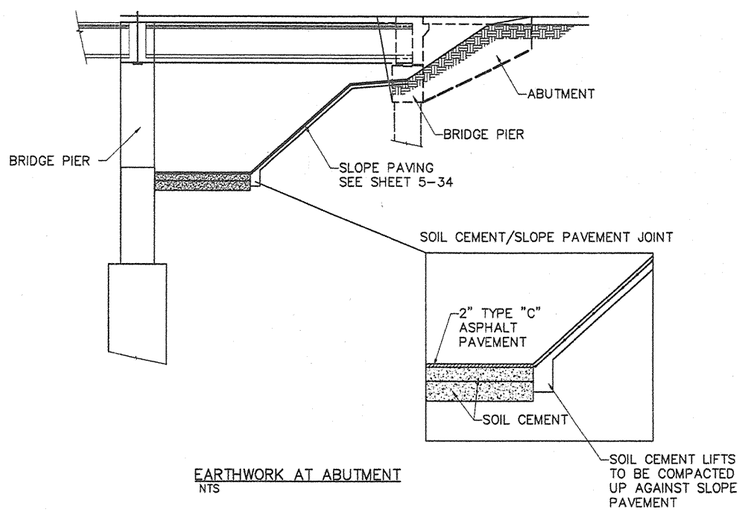

EARTHWORK AT ABUTMENT
NTS

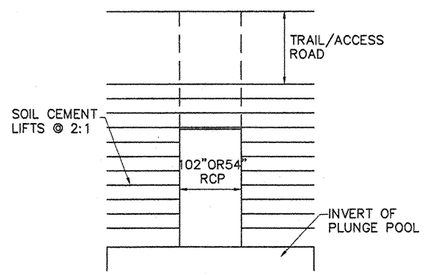

TYPICAL PIPE OUTFALL PLAN VIEW
NTS

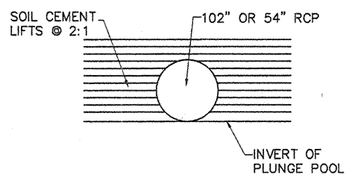

TYPICAL PIPE OUTFALL
NTS

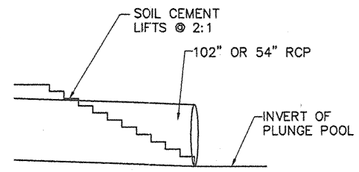

TYPICAL PIPE OUTFALL SECTION VIEW
NTS

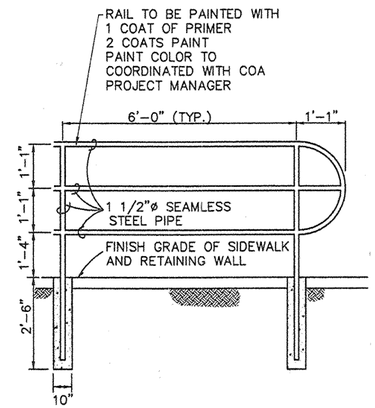

METAL PEDESTRIAN RAILING DETAIL
NTS

AS-BUILT INFORMATION

CONTRACTOR	David Northeye Const Inc
WORK STAKED BY	Billingsley Engr.
INSPECTOR'S ACCEPTANCE BY	COA
FIELD VERIFICATION BY	COA/WCI
COMPUTED & DRAWN BY	WCI
RECORDED BY	
NO.	

DATE 3/07

BENCH MARKS

THE STA. IS A USGS TABLET STAMPED 'BLACK-2 1977' SET FLUSH W/ THE GROUND. THE STA. IS LOCATED 8.5 MI. N.W. OF DOWNTOWN ALBUQ. TO REACH THE STA. FROM THE INTX. OF COORS/I-40 GO N. ON COORS 5.8 MI. TO PARADISE BLVD. TURN LEFT GO W. ON PARADISE BLVD. 1.1 MI. TO GOLF COURSE RD. TURN RIGHT GO N. ON GOLF COURSE RD 1.3 MI. TO McMAHON BLVD. THE STA. IS ON THE LEFT.
N 1530241.52, E 372920.43
ELEVATION = 5213.926 FT. (2ND ORDER) (NGVD29)

SURVEY INFORMATION

FIELD NOTES

NO.	BY	DATE

ENGINEER'S SEAL

ELIAS E. ARCHULETA
NEW MEXICO
15781
REGISTERED PROFESSIONAL ENGINEER
3/10/06

NO.	DATE	REVISED SHEET STRUCTURE MOD. REMARKS	BY
1			EEA

REVISIONS

WILSON & COMPANY, ENGINEERS & ARCHITECTS

DESIGNED BY	EEA	DATE NOV 2005
DRAWN BY	ELO	DATE NOV 2005
CHECKED BY	EEA	DATE NOV 2005

CITY OF ALBUQUERQUE
DEPARTMENT OF MUNICIPAL DEVELOPMENT
TRANSPORTATION DIVISION

McMAHON BLVD. EXTENSION–CALABACILLAS BRIDGE
GRADE CONTROL STRUCTURE
DETAILS

Design Review Committee	City Engineer Approval	Last Design Update	Mo./Day/Yr.	Mo./Day/Yr.

City Project No.	Zone Map No.	Sheet	Of
COA 681602	A-10-Z	3-19	

WILSON & COMPANY

X:\Public\PROJECTS\X22100120 2\T\2012DTL04.dwg 3/9/2006 11:55:35 AM MST

MC MAHON BRIDGE

SLOPE CONCRETE DETAILS AT ABUTMENTS

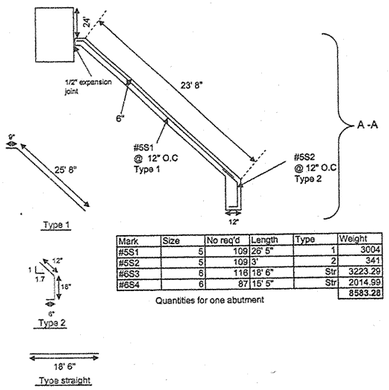

Mark	Size	No req'd	Length	Type	Weight
#5S1	5	109	26' 5"	1	3004
#5S2	5	109	3'	2	341
#6S3	6	116	18' 6"	Str	3223.29
#6S4	6	87	15' 5"	Str	2014.99
					8583.28

Quantities for one abutment

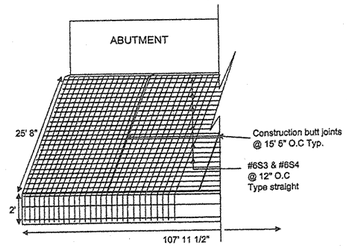

A - A

MC MAHON BRIDGE

SLOPE CONCRETE DETAILS AT ABUTMENTS WINGS

NORTH WEST CORNER

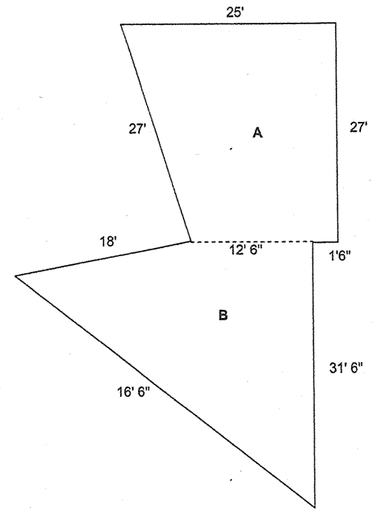

MC MAHON BRIDGE

SLOPE CONCRETE DETAILS AT ABUTMENTS WINGS

SOUTH WEST CORNER

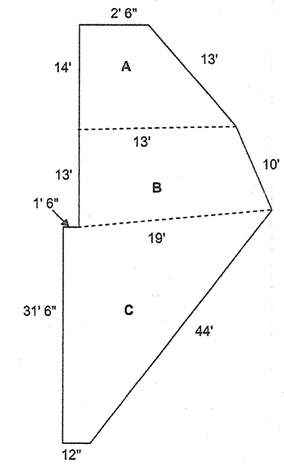

MC MAHON BRIDGE

SLOPE CONCRETE DETAILS AT ABUTMENTS WINGS

NORTH EAST CORNER

TOTAL 88.38 SQ YDS

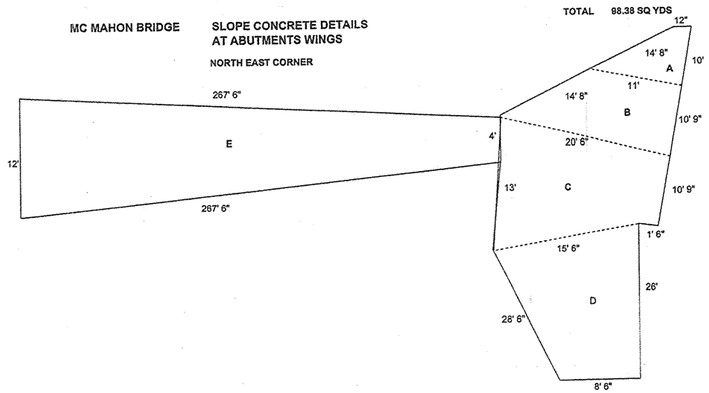

MC MAHON BRIDGE

SLOPE CONCRETE DETAILS AT ABUTMENTS WINGS

SOUTH EAST CORNER

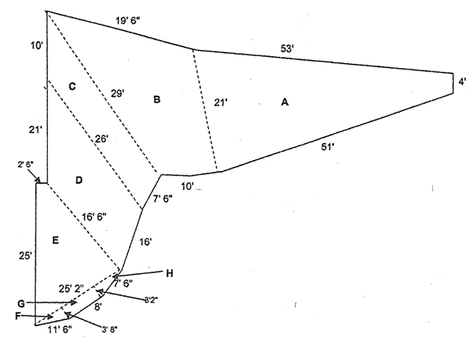

AS-BUILT INFORMATION

CONTRACTOR David Montoya Const. Inc

WORK STAKED BY Billingsley Engr. DATE

WORK STAKED ACCEPTANCE BY COA DATE

FIELD VERIFICATION BY WCL DATE 3/07

DRAWINGS CORRECTED BY WCL DATE

MICRO-FILM INFORMATION

RECORDED BY DATE

NO.

BENCH MARKS

THE STA. IS A USGS TABLET STAMPED 'BLACK-2 1977' SET FLUSH W/ THE GROUND. THE STA. IS LOCATED 8.5 MI. N.W. OF DOWNTOWN ALBUQ. TO REACH THE STA. FROM THE INTX. OF COORS/I-40 GO N. ON COORS 5.8 MI. TO PARADISE BLVD. TURN LEFT GO W. ON PARADISE BLVD. 1.1 MI. TO GOLF COURSE RD. TURN RIGHT GO N. ON GOLF COURSE RD. 1.3 MI. TO McMAHON BLVD. THE STA. IS ON THE LEFT.

N 1530241.52, E 372920.43

ELEVATION = 5213.926 FT. (2ND ORDER) (NGVD29)

SURVEY INFORMATION

FIELD NOTES

NO.	BY	DATE

ENGINEER'S SEAL

NO.	DATE	REMARKS	BY

REVISIONS

WILSON & COMPANY, ENGINEERS & ARCHITECTS

DESIGNED BY

DRAWN BY

CHECKED BY

CITY OF ALBUQUERQUE
DEPARTMENT OF MUNICIPAL DEVELOPMENT
TRANSPORTATION DIVISION

McMAHON BLVD. EXTENSION–CALABACILLAS BRIDGE

Design Review Committee	City Engineer Approval	Last Design Update	Mo./Day/Yr.	Mo./Day/Yr.

City Project No.	Zone Map No.	Sheet	Of
COA 681602	A–10–Z	3–19a	

WILSON & COMPANY

DRAWINGS REQUIRED

5-1 GENERAL NOTES & ESTIMATED QUANTITIES
5-2 STRUCTURE LOCATION PROFILE
5-3 STRUCTURE LOCATION PLAN
5-4 FOUNDATION DATA
5-5 TYPICAL SECTION
5-6 MEDIAN DETAILS
5-7 FRAMING PLAN AND LONGITUDINAL SECTION
5-8 DECK REINFORCEMENT PLAN
5-9 STEEL DIAPHRAGM DETAILS
5-10 SEAT ELEVATIONS
5-11 DECK ELEVATIONS
5-12 PSC GIRDER TYPE BT-63, SPANS 1 & 3
5-13 PSC GIRDER TYPE BT-63, SPAN 2
5-14 ELASTOMERIC BEARING DETAILS
5-15 ABUTMENT NO.1 PLAN AND ELEVATION
5-16 ABUTMENT NO.2 PLAN AND ELEVATION
5-17 ABUTMENT DETAILS
5-18 APPROACH SLAB
5-19 APPROACH SLAB SLEEPER SLAB
5-20 WINGWALL DETAILS
5-21 PIER PLAN AND ELEVATION
5-22 PIER DETAILS
5-23 PIER DETAILS
5-24 DRILLED SHAFT DETAILS
5-25 REBAR DIAGRAM AND SCHEDULE
5-26 ELASTOMERIC EXPANSION JOINT SEAL, GENERAL DATA
5-27 ELASTOMERIC EXP. JOINT SEAL, TYPE "A" INSTALLATION
5-28 ELASTOMERIC EXP. JOINT SEAL, TYPE "B" INSTALLATION
5-29 32" BARRIER RAILING GENERAL DETAILS
5-30 32" BARRIER RAILING STANDARD SECTION DETAILS
5-31 32" BARRIER RAILING TRANSITION SECTION DETAILS
5-32 32" BARRIER RAILING DETAILS AT JOINT SEALS
5-33 DOWEL ASSEMBLY DETAILS FOR EXPANSION JOINTS 32" BARRIER RAILING
5-34 SLOPE PAVEMENT DETAIL AT BRIDGE
5-35 METAL PEDESTRIAN RAILING DETAILS

GENERAL NOTES

1. SPECIFICATIONS FOR CONSTRUCTION: CITY OF ALBUQUERQUE STANDARD SPECIFICATIONS FOR PUBLIC WORKS CONSTRUCTION, 1986 WITH UPDATES, AND APPLICABLE SUPPLEMENTAL TECHNICAL SPECIFICATIONS.

2. DRILL-HOLE INFORMATION: THE PROJECT ENGINEER IS NOT RESPONSIBLE FOR ANY INTERPRETATION OR ASSUMPTIONS MADE BY THE CONTRACTOR BASED ON THE DRILL-HOLE INFORMATION SHOWN ON THE PLANS.

3. CONCRETE: PER SECTION 101. CHAMFER ALL EXPOSED EDGES OF STRUCTURES 3/4" UNLESS OTHERWISE NOTED.

4. FINISHING CONCRETE SURFACES: THE FOLLOWING SURFACES HAVE COLOR REQUIREMENTS:
   A. 32" BARRIER RAILING
   B. METAL RAILING
   C. MEDIAN
   D. SIDEWALKS
   E. EXTERIOR FACE OF FASCIA GIRDERS
   F. PIERS ABOVE GROUNDLINE
   G. ABUTMENTS AND WINGWALLS ABOVE GROUNDLINE

   COORDINATE COLOR REQUIREMENTS WITH CITY PROJECT ENGINEER. SUBMIT A 1-FT. SQUARE SAMPLE PANEL FOR EACH PROPOSED COLOR FOR APPROVAL PRIOR TO USE.

5. REINFORCING BARS: AASHTO M 31, GRADE 60. DIMENSIONS SHOWN REFER TO THE CENTERLINE OF BARS UNLESS OTHERWISE NOTED.

   ADD NOTE ON REINFORCING SPLICE LENGTHS.

6. STRUCTURAL STEEL:

COMPONENT	GRADE
ALL	AASHTO M 270, GRADE 50

7. PRESTRESSED CONCRETE GIRDER, TYPE BT-63: SEE SHEETS 5-12 AND 5-13.

8. BRIDGE NUMBER PLATE: FURNISH 2 BRIDGE NUMBER PLATES CONFORMING TO THE DETAILS SHOWN. THE COST OF THE PLATES IS INCIDENTAL TO CONSTRUCTION AND WILL NOT BE PAID FOR DIRECTLY.

9. PERMANENT ANTI-GRAFFITI PROTECTIVE COATING: APPLY TO THE FOLLOWING SURFACES:
   A. BRIDGE CONCRETE BARRIER RAILINGS.
   B. EXTERIOR EDGES OF SIDEWALKS.
   C. EXTERIOR SURFACES OF EXTERIOR BEAMS.
   D. EXTERIOR SURFACES OF ABUTMENTS, WINGWALLS, AND PIERS ABOVE THE GRADE LINE.

10. STAY-IN-PLACE DECK FORMS: PERMANENT STEEL DECK FORMS MAY BE USED FOR BRIDGE DECK CONSTRUCTION. SUBMIT DESIGN CALCULATIONS AND SPECIFICATIONS FOR THE PROPOSED FORMING SYSTEM TO THE PROJECT ENGINEER FOR APPROVAL PRIOR TO INSTALLATION.

DESIGN DATA

DESIGN SPECIFICATIONS: AASHTO STANDARD SPECIFICATIONS FOR HIGHWAY BRIDGES, 17TH (2002) EDITION.

DESIGN STRESSES:
SUPERSTRUCTURE REINFORCED CONCRETE: f'c = 4000 PSI (28 DAYS)
SUBSTRUCTURE REINFORCED CONCRETE: f'c = 3000 PSI (28 DAYS)
REINFORCING STEEL: fy = 60000 PSI

LIVE LOAD: HS25-44

WEARING SURFACE: 30 PSF ALLOWANCE FOR FUTURE WEARING SURFACE

STAY-IN-PLACE DECK FORMS: 15 PSF

WIND VELOCITY: 75 MPH

SEISMIC PERFORMANCE CATEGORY (SPC): B

HORIZONTAL EARTH PRESSURES (EQUIV. FLUID PRESSURES):
ACTIVE PRESSURE: 30 PSF/FT
AT-REST PRESSURE: 50 PSF/FT
PASSIVE PRESSURE: 60 PSF/FT

GEOTECHNICAL INVESTIGATION:
FINAL GEOTECHNICAL ENGINEERING STUDY REPORT
McMAHON BOULEVARD BRIDGE OVER CALABACILLAS ARROYO,
ALBUQUERQUE, NEW MEXICO
BY: AMEC, INC.
AMCE PROJECT NO. 4-517-000094
DATE: OCTOBER 2005

SUPPLEMENTAL SPECIFICATIONS

SECTION 5 - STRUCTURAL CONCRETE
SECTION 555 - STRUCTURE EXCAVATION AND BACKFILL FOR BRIDGES
SECTION 562 - CONCRETE DRILLED SHAFTS
SECTION 581 - ELASTOMERIC EXPANSION JOINT SEAL
SECTION 585 - SEALED EXPANSION JOINTS
SECTION 590 - PENETRATING WATER REPELLENT TREATMENT
SECTION 591 - CRACK SEALING USING HIGH MOLECULAR WEIGHT METHACRYLATE
SECTION 592 - PERMANENT ANT-GRAFFITI PROTECTIVE COATING
(SEE SUPPLEMENTAL TECHNICAL SPECIFICATIONS IN CONTRACT DOCUMENTS)

INCIDENTAL ITEMS

1. PERMANENT ANTI-GRAFFITI PROTECTIVE COATING
2. PREFORMED BITUMINOUS JOINT FILLER (M213)
3. BRIDGE NUMBER PLATES
4. ELASTOMERIC BEARING PADS
5. HIGH MOLECULAR WEIGHT METHACRYLATE (HMWM)
6. ABUTMENT WATERPROOFING SYSTEM
7. PREFABRICATED COMPOSITE DRAINAGE SYSTEM
8. GALVANIZED SHEET METAL, 16 GA.
9. WATERSTOP AND ITS APPURTENANCES

NOTE:
ITEMS LISTED ARE ONLY A GENERAL DESCRIPTION OF THE REQUIRED WORK AND MATERIALS, AND MAY NOT BE COMPLETE. THIS LIST DOES NOT INCLUDE INCIDENTAL WORK OR MATERIALS REQUIRED BY STANDARD DRAWINGS, SUPPLEMENTAL TECHNICAL SPECIFICATIONS OR THE STANDARD SPECIFICATIONS.

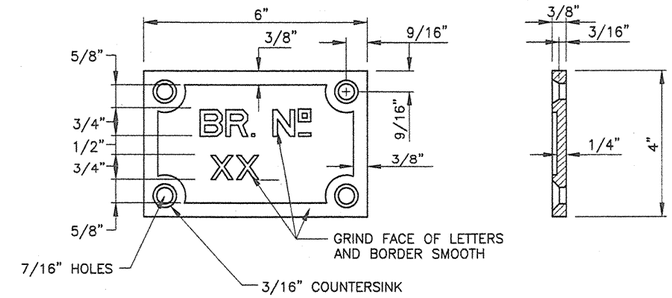

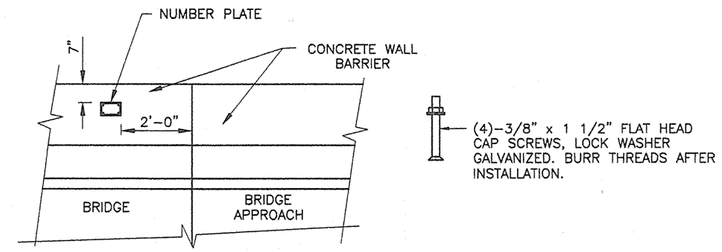

PARTIAL ELEVATION

NOTES:
1. TWO (2) PLATES WITH BOLTS REQUIRED FOR EACH BRIDGE. MATERIAL EQUALS CAST IRON. RAISED BLOCK LETTERS OF NEAT SQUARE CUT DESIGN. GRIND FACE, & HOT DIPPED GALV.

2. EACH PLATE IS TO BE PLACED AT EACH END OF THE BRIDGE ON THE ROADWAY FACE OF THE CONCRETE BARRIER RAILING AT THE END OF THE DECK. LOCATE ON RIGHT SIDE AS ONE APPROACHES BRIDGE.

BRIDGE NUMBER PLATE DETAILS

ESTIMATED QUANTITIES

ITEM NO.	ITEM	UNIT	SUPER-STRUCTURE	SUBSTRUCTURE						TOTAL
				APPR. SLAB NO. 1	ABUT. NO. 1	PIER NO. 1	PIER NO. 2	ABUT. NO 2	APPR. SLAB NO. 2	
102.010	REINFORCING BARS, GRADE 60	LB				34684	34684			69368
103.010	EPOXY COATED REINFORCING BARS, GRADE 60	LB	189888	10504	6917	2040	2040	6917	10504	228810
510.010	SUPERSTRUCTURE CONCRETE	CY	613.0	66.0	90.0	76.0	76.0	90.0	66.0	1077.0
510.020	SUBSTRUCTURE CONCRETE CLASS A	CY			58.0	247.0	247.0	58.0		610.0
510.030	32" CONCRETE BARRIER	LF	469.2							469.2
510.040	CONCRETE SLOPE PAVING	SY			741			666		1407
512.010	PRESTRESSED CONCRETE GIRDERS, BT-63	LF	2432.0							2432.0
520.010	STRUCTURAL STEEL FOR CONCRETE BRIDGES	LB	20549.0							20549.0
540.040	METAL PEDESTRIAN RAILING	LF	469.2							469.2
555.010	STRUCT. EXCAVATION AND BACKFILL FOR BRIDGES	CY		242	249			221	242	954
561.010	~~DRILLED SHAFT INTEGRITY TESTING~~	EA			1	2	2	1		6
562.010	DRILLED SHAFTS, 42" DIAMETER	LF			252.0			252.0		504.0
~~562.011~~	~~DRILLED SHAFTS, 72" DIAMETER~~	LF				280.0	280.0			560.0
581.010	ELASTOMERIC EXPANSION JOINT SEALS	LF		114.0					114.0	228.0
585.010	SEALED EXPANSION JOINTS	LF	463.0	109.0					109.0	681.0

1

AS-BUILT INFORMATION
CONTRACTOR David Nortega Const. Inc. DATE
WORK STAKED BY Bittingsley Eng. DATE
WORK STAKING ACCEPTANCE BY COA DATE
FIELD VERIFICATION BY COA/WCL DATE
DRAWINGS CORRECTED BY WCL DATE 3/07
RECORDED BY MICRO-FILM INFORMATION DATE
NO.

BENCH MARKS
THE STA. IS A USGS TABLET STAMPED "BLACK-2 1977" SET FLUSH W/ THE GROUND. THE STA. IS LOCATED 8.5 MI. N.W. OF DOWNTOWN ALBUQ. TO REACH THE STA. FROM THE INTX OF COORS/I-40 GO N. ON COORS 5.8 MI. TO PARADISE BLVD. TURN LEFT GO W. ON PARADISE BLVD. 1.1 MI. TO GOLF COURSE RD. TURN RIGHT GO N. ON GOLF COURSE RD. 1.3 MI. TO McMAHON BLVD. THE STA. IS ON THE LEFT.
ELEVATION = 5213.926 FT. (2ND ORDER) (NGVD29)

SURVEY INFORMATION
FIELD NOTES
NO. BY DATE

ENGINEER'S SEAL
GARY W. KINCHEN NEW MEXICO 14368 REGISTERED PROFESSIONAL ENGINEER
OCTOBER 28, 2005

NO.	DATE	REMARKS	BY
1	2-1-06	REVISED DRILED SHAFT DIAMETER	CRH

REVISIONS

WILSON & COMPANY, ENGINEERS & ARCHITECTS
DESIGNED BY GWK DATE OCT 2005
DRAWN BY CRH DATE OCT 2005
CHECKED BY SFP DATE OCT 2005

CITY OF ALBUQUERQUE
DEPARTMENT OF MUNICIPAL DEVELOPMENT
TRANSPORTATION DIVISION

McMAHON BLVD. EXTENSION - LAS CALABACILLAS BRIDGE

GENERAL NOTES & ESTIMATED QUANITIES

Design Review Committee | City Engineer Approval | Last Design Update | Mo./Day/Yr. | Mo./Day/Yr.

City Project No. COA 681602 | Zone Map No. A-10-Z | Sheet 5-1 | Of

WILSON & COMPANY

Addendum #1
Attachment #2 Sheet 3 of 16

DRAWINGS REQUIRED

GENERAL NOTES

1. SPECIFICATIONS FOR CONSTRUCTION: CITY OF ALBUQUERQUE STANDARD SPECIFICATIONS FOR PUBLIC WORKS CONSTRUCTION, 1986 WITH UPDATES, AND APPLICABLE SUPPLEMENTAL TECHNICAL SPECIFICATIONS.

2. DRILL-HOLE INFORMATION: THE PROJECT ENGINEER IS NOT RESPONSIBLE FOR ANY INTERPRETATION OR ASSUMPTIONS MADE BY THE CONTRACTOR BASED ON THE DRILL-HOLE INFORMATION SHOWN ON THE PLANS.

3. CONCRETE: PER SECTION 101. CHAMFER ALL EXPOSED EDGES OF STRUCTURES 3/4" UNLESS OTHERWISE NOTED.

4. FINISHING CONCRETE SURFACES: THE FOLLOWING SURFACES HAVE COLOR REQUIREMENTS:
   A. 32" BARRIER RAILING
   B. METAL RAILING
   C. MEDIAN
   D. SIDEWALKS
   E. EXTERIOR FACE OF FASCIA GIRDERS
   F. PIERS ABOVE GROUNDLINE
   G. ABUTMENTS AND WINGWALLS ABOVE GROUNDLINE

   COORDINATE COLOR REQUIREMENTS WITH CITY PROJECT ENGINEER. SUBMIT A 1-FT. SQUARE SAMPLE PANEL FOR EACH PROPOSED COLOR FOR APPROVAL PRIOR TO USE.

5. REINFORCING BARS: AASHTO M 31, GRADE 60. DIMENSIONS SHOWN REFER TO THE CENTERLINE OF BARS UNLESS OTHERWISE NOTED.

   ADD NOTE ON REINFORCING SPLICE LENGTHS.

6. STRUCTURAL STEEL:

COMPONENT	GRADE
ALL	AASHTO M 270, GRADE 50

7. PRESTRESSED CONCRETE GIRDER, TYPE BT-63: SEE SHEETS 5-12 AND 5-13.

8. BRIDGE NUMBER PLATE: FURNISH 2 BRIDGE NUMBER PLATES CONFORMING TO THE DETAILS SHOWN. THE COST OF THE PLATES IS INCIDENTAL TO CONSTRUCTION AND WILL NOT BE PAID FOR DIRECTLY.

9. PERMANENT ANTI-GRAFFITI PROTECTIVE COATING: APPLY TO THE FOLLOWING SURFACES:
   A. BRIDGE CONCRETE BARRIER RAILINGS.
   B. EXTERIOR EDGES OF SIDEWALKS.
   C. EXTERIOR SURFACES OF EXTERIOR BEAMS.
   D. EXTERIOR SURFACES OF ABUTMENTS, WINGWALLS, AND PIERS ABOVE THE GRADE LINE.

10. STAY-IN-PLACE DECK FORMS: PERMANENT STEEL DECK FORMS MAY BE USED FOR BRIDGE DECK CONSTRUCTION. SUBMIT DESIGN CALCULATIONS AND SPECIFICATIONS FOR THE PROPOSED FORMING SYSTEM TO THE PROJECT ENGINEER FOR APPROVAL PRIOR TO INSTALLATION.

DESIGN DATA

DESIGN SPECIFICATIONS: AASHTO STANDARD SPECIFICATIONS FOR HIGHWAY BRIDGES, 17TH (2002) EDITION.

DESIGN STRESSES:
SUPERSTRUCTURE REINFORCED CONCRETE: f'c = 4000 PSI (28 DAYS)
SUBSTRUCTURE REINFORCED CONCRETE: f'c = 3000 PSI (28 DAYS)
REINFORCING STEEL: fy = 60000 PSI

LIVE LOAD: HS25-44

WEARING SURFACE: 30 PSF ALLOWANCE FOR FUTURE WEARING SURFACE

STAY-IN-PLACE DECK FORMS: 15 PSF

WIND VELOCITY: 75 MPH

SEISMIC PERFORMANCE CATEGORY (SPC): B

HORIZONTAL EARTH PRESSURES (EQUIV. FLUID PRESSURES):
ACTIVE PRESSURE: 30 PSF/FT
AT-REST PRESSURE: 50 PSF/FT
PASSIVE PRESSURE: 60 PSF/FT

GEOTECHNICAL INVESTIGATION:
FINAL GEOTECHNICAL ENGINEERING STUDY REPORT
McMAHON BOULEVARD BRIDGE OVER CALABACILLAS ARROYO,
ALBUQUERQUE, NEW MEXICO
BY: AMEC, INC.
AMCE PROJECT NO. 4-517-000094
DATE: OCTOBER 2005

SUPPLEMENTAL SPECIFICATIONS

SECTION 5 - STRUCTURAL CONCRETE
SECTION 555 - STRUCTURE EXCAVATION AND BACKFILL FOR BRIDGES
SECTION 562 - CONCRETE DRILLED SHAFTS
SECTION 581 - ELASTOMERIC EXPANSION JOINT SEAL
SECTION 585 - SEALED EXPANSION JOINTS
SECTION 590 - PENETRATING WATER REPELLENT TREATMENT
SECTION 591 - CRACK SEALING USING HIGH MOLECULAR WEIGHT METHACRYLATE
SECTION 592 - PERMANENT ANT-GRAFFITI PROTECTIVE COATING
(SEE SUPPLEMENTAL TECHNICAL SPECIFICATIONS IN CONTRACT DOCUMENTS)

INCIDENTAL ITEMS

1. PERMANENT ANTI-GRAFFITI PROTECTIVE COATING
2. PREFORMED BITUMINOUS JOINT FILLER (M213)
3. BRIDGE NUMBER PLATES
4. ELASTOMERIC BEARING PADS
5. HIGH MOLECULAR WEIGHT METHACRYLATE (HMWM)
6. ABUTMENT WATERPROOFING SYSTEM
7. PREFABRICATED COMPOSITE DRAINAGE SYSTEM
8. GALVANIZED SHEET METAL, 16 GA.
9. WATERSTOP AND ITS APPURTENANCES

NOTE:
ITEMS LISTED ARE ONLY A GENERAL DESCRIPTION OF THE REQUIRED WORK AND MATERIALS, AND MAY NOT BE COMPLETE. THIS LIST DOES NOT INCLUDE INCIDENTAL WORK OR MATERIALS REQUIRED BY STANDARD DRAWINGS, SUPPLEMENTAL TECHNICAL SPECIFICATIONS OR THE STANDARD SPECIFICATIONS.

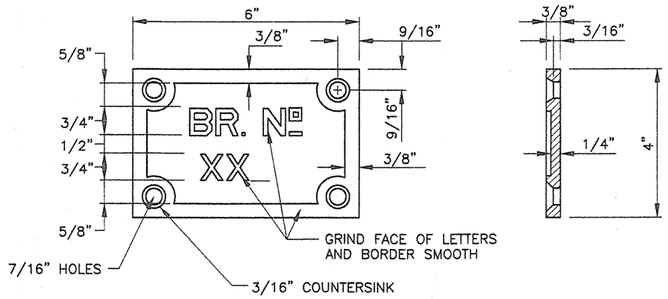

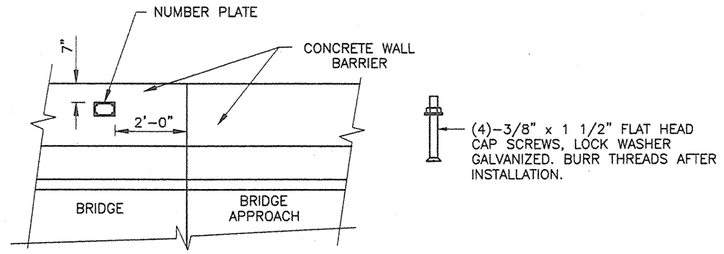

PARTIAL ELEVATION

NOTES:
1. TWO (2) PLATES WITH BOLTS REQUIRED FOR EACH BRIDGE. MATERIAL EQUALS CAST IRON. RAISED BLOCK LETTERS OF NEAT SQUARE CUT DESIGN. GRIND FACE, & HOT DIPPED GALV.

2. EACH PLATE IS TO BE PLACED AT EACH END OF THE BRIDGE ON THE ROADWAY FACE OF THE CONCRETE BARRIER RAILING AT THE END OF THE DECK. LOCATE ON RIGHT SIDE AS ONE APPROACHES BRIDGE.

BRIDGE NUMBER PLATE DETAILS

ESTIMATED QUANTITIES

ITEM NO.	ITEM	UNIT	SUPER-STRUCTURE	SUBSTRUCTURE						TOTAL
				APPR. SLAB NO. 1	ABUT. NO. 1	PIER NO. 1	PIER NO. 2	ABUT. NO 2	APPR. SLAB NO. 2	
102.010	REINFORCING BARS, GRADE 60	LB				34684	34684			69368
103.010	EPOXY COATED REINFORCING BARS, GRADE 60	LB	189888	10504	6917	2040	2040	6917	10504	228810
510.010	SUPERSTRUCTURE CONCRETE	CY	613.0	66.0	90.0	76.0	76.0	90.0	66.0	1077.0
510.020	SUBSTRUCTURE CONCRETE CLASS A	CY			58.0	247.0	247.0	58.0		610.0
510.030	32" CONCRETE BARRIER	LF	469.2							469.2
510.040	CONCRETE SLOPE PAVING	SY			741			666		1407
512.010	PRESTRESSED CONCRETE GIRDERS, BT-63	LF	2432.0							2432.0
520.010	STRUCTURAL STEEL FOR CONCRETE BRIDGES	LB	20549.0							20549.0
540.040	METAL PEDESTRIAN RAILING	LF	469.2							469.2
555.010	STRUCT. EXCAVATION AND BACKFILL FOR BRIDGES	CY		242	249			221	242	954
561.010	DRILLED SHAFT INTEGRITY TESTING	EA			1	2	2	1		6
562.010	DRILLED SHAFTS, 48" DIAMETER	LF			252.0			252.0		504.0
562.011	DRILLED SHAFTS, 72" DIAMETER	LF				280.0	280.0			560.0
581.010	ELASTOMERIC EXPANSION JOINT SEALS	LF		114.0					114.0	228.0
585.010	SEALED EXPANSION JOINTS	LF	463.0	109.0					109.0	681.0

AS-BUILT INFORMATION
CONTRACTOR David Montoya Const. Inc. DATE
WORK STAKED BY Baltingsley Engr. DATE
INSPECTOR'S ACCEPTANCE BY COA DATE
FIELD VERIFICATION BY COA/WCL DATE
DRAWINGS CORRECTED BY WCL DATE 3/03
MICRO-FILM INFORMATION
RECORDED BY DATE
NO.

BENCH MARKS
THE STA. IS A USGS TABLET STAMPED "BLACK-2 1977" SET FLUSH W/ THE GROUND. THE STA. IS LOCATED 8.5 MI. N.W. OF DOWNTOWN ALBUQ. TO REACH THE STA. FROM THE INTX OF COORS/I-40 GO N. ON COORS 5.8 MI. TO PARADISE BLVD. TURN LEFT GO W. ON PARADISE BLVD. 1.1 MI. TO GOLF COURSE RD. TURN RIGHT GO N. ON GOLF COURSE RD. 1.3 MI. TO McMAHON BLVD. THE STA. IS ON THE LEFT.
ELEVATION = 5213.926 FT. (2ND ORDER) (NGVD29)

SURVEY INFORMATION
FIELD NOTES
NO. BY DATE

ENGINEER'S SEAL
GARY W. KIRCHER NEW MEXICO 14360 PROFESSIONAL ENGINEER
OCTOBER 28, 2005

NO. DATE REMARKS BY
REVISIONS
WILSON & COMPANY, ENGINEERS & ARCHITECTS
DESIGNED BY GWK DATE OCT 2005
DRAWN BY CRH DATE OCT 2005
CHECKED BY SFP DATE OCT 2005

CITY OF ALBUQUERQUE
DEPARTMENT OF MUNICIPAL DEVELOPMENT
TRANSPORTATION DIVISION
McMAHON BLVD. EXTENSION - LAS CALABACILLAS BRIDGE
GENERAL NOTES & ESTIMATED QUANITIES

Design Review Committee: APPROVED — DESIGN REVIEW COMMITTEE
City Engineer Approval: APPROVED — CITY ENGINEER
Last Design Update | Mo./Day/Yr. | Mo./Day/Yr.

City Project No. COA 681602 | Zone Map No. A-10-Z | Sheet 5-1 | Of

WILSON & COMPANY

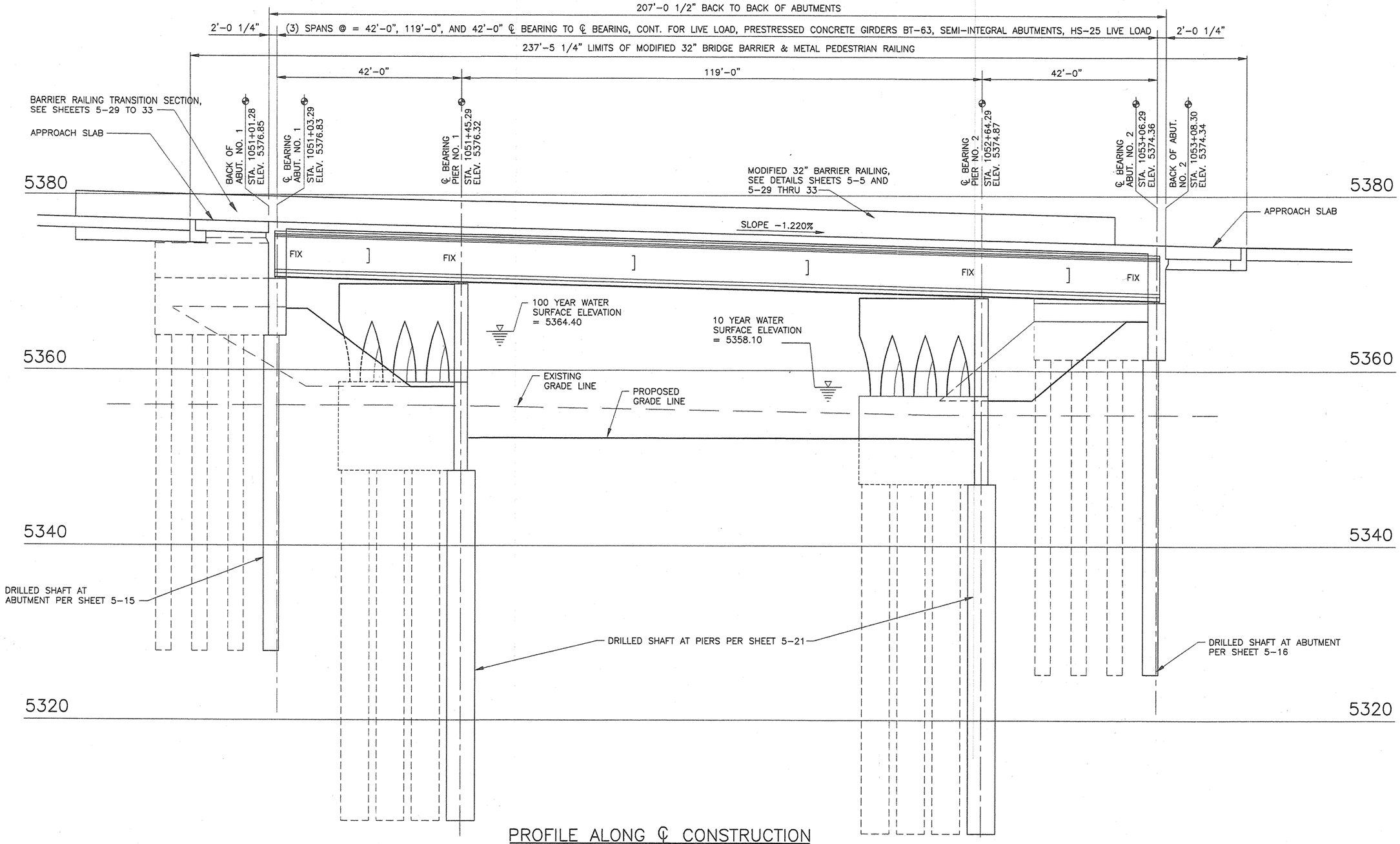

PROFILE ALONG ℄ CONSTRUCTION

SCALE: 3/32" = 1' HORIZONTAL, 3/32" = 2' VERTICAL

WATERWAY DATA

NAME OF WATERWAY:	ARROYO DE LAS CALABACILLAS
DRAINAGE AREA:	0000 ACRES
10 YEAR DISCHARGE:	9,060 CFS
10 YEAR VELOCITY:	10.0 FPS
10 YEAR SCOUR:	-- FT
100 YEAR DISCHARGE:	16,840 CFS
100 YEAR VELOCITY:	12.2 FPS
100 YEAR SCOUR:	-- FT

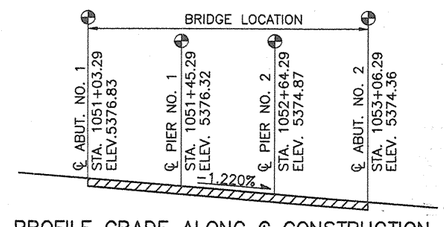

PROFILE GRADE ALONG ℄ CONSTRUCTION

N.T.S.

AS-BUILT INFORMATION
CONTRACTOR David Montoya Const. Inc DATE
WORK STAKED BY Baumgartner Engr. DATE
INSPECTOR'S ACCEPTANCE BY COA DATE
FIELD VERIFICATION BY COA/WCI DATE
DRAWINGS CORRECTED BY WCI DATE 3/07
MICRO-FILM INFORMATION
RECORDED BY DATE
NO.

BENCH MARKS
THE STA. IS A USGS TABLET STAMPED "BLACK-2 1977" SET FLUSH W/ THE GROUND. THE STA. IS LOCATED 8.5 MI. N.W. OF DOWNTOWN ALBUQ. TO REACH THE STA. FROM THE INTX OF COORS/I-40 GO N. ON COORS 5.8 MI. TO PARADISE BLVD. TURN LEFT GO W. ON PARADISE BLVD. 1.1 MI. TO GOLF COURSE RD. TURN RIGHT GO N. ON GOLF COURSE RD 1.3 MI. TO McMAHON BLVD. THE STA. IS ON THE LEFT.
ELEVATION = 5213.926 FT. (2ND ORDER) (NGVD29)

SURVEY INFORMATION
FIELD NOTES

NO.	BY	DATE

ENGINEER'S SEAL
GARY W. KINCHEN NEW MEXICO 14368 PROFESSIONAL ENGINEER
OCTOBER 28, 2005

NO.	DATE	REMARKS	BY

REVISIONS

WILSON & COMPANY, ENGINEERS & ARCHITECTS

DESIGNED BY	GWK	DATE OCT 2005
DRAWN BY	CRH	DATE OCT 2005
CHECKED BY	SFP	DATE OCT 2005

CITY OF ALBUQUERQUE
DEPARTMENT OF MUNICIPAL DEVELOPMENT
TRANSPORTATION DIVISION

McMAHON BLVD. EXTENSION – LAS CALABACILLAS BRIDGE

STRUCTURAL LOCATION PROFILE

Design Review Committee: APPROVED DESIGN REVIEW COMMITTEE
City Engineer Approval: APPROVED CITY ENGINEER
Last Design Update | Mo./Day/Yr. | Mo./Day/Yr.

City Project No.	Zone Map No.	Sheet	Of
COA 681602	A-10-Z	5-2	

WILSON & COMPANY

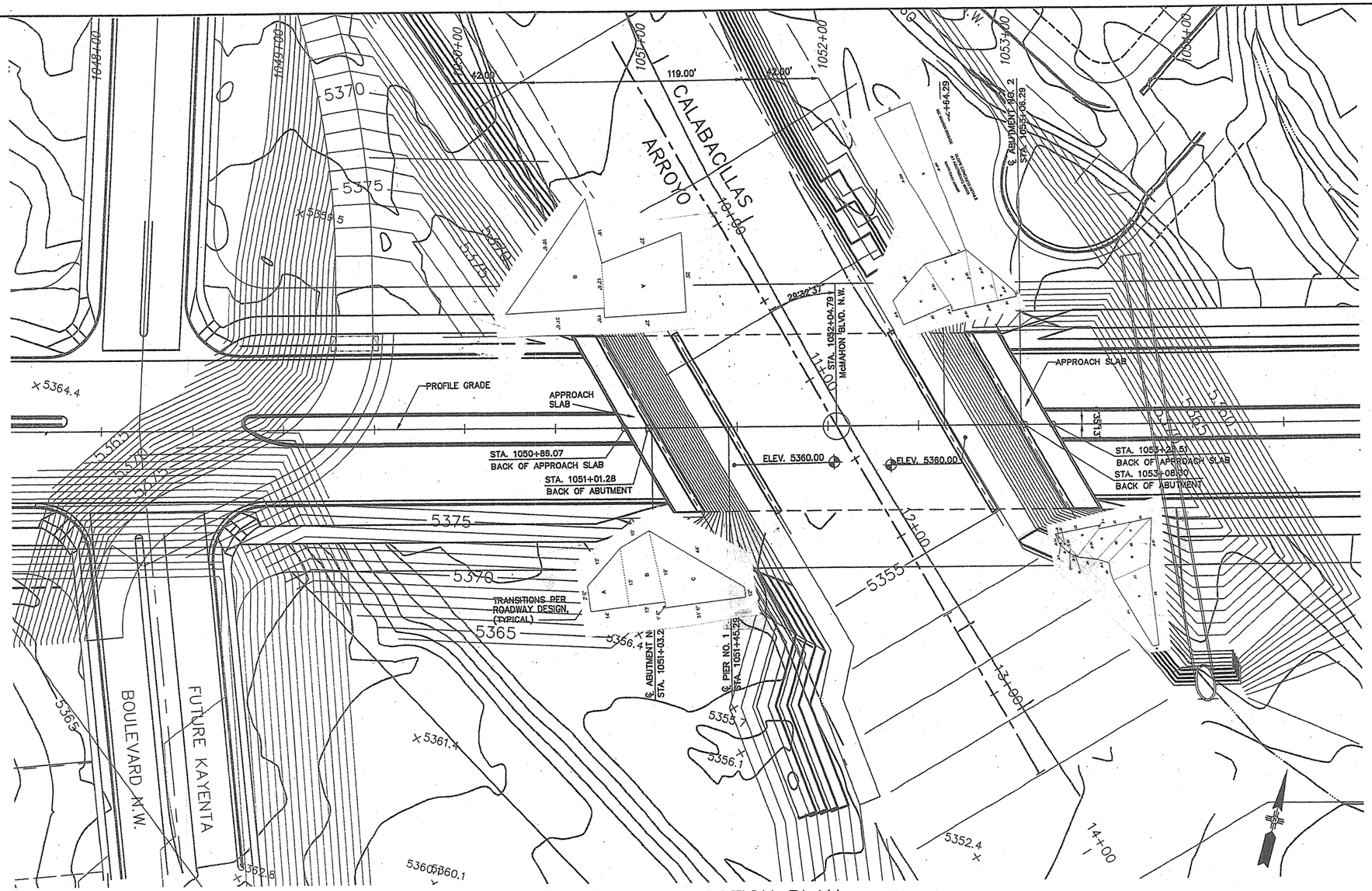

STRUCTURAL LOCATION PLAN

SCALE : 1" = 30'

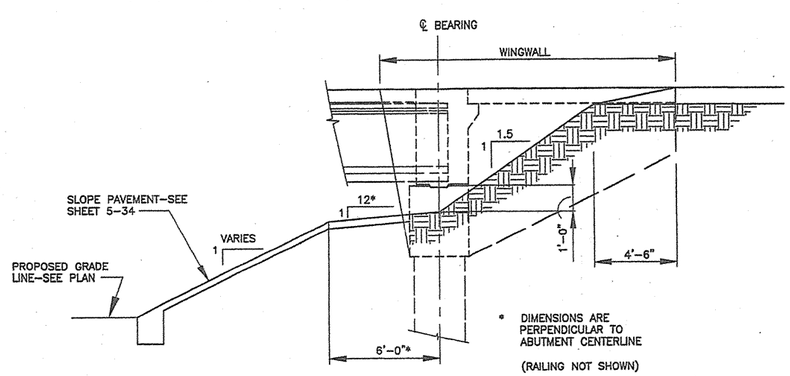

EARTHWORK AT ABUTMENT

NO SCALE

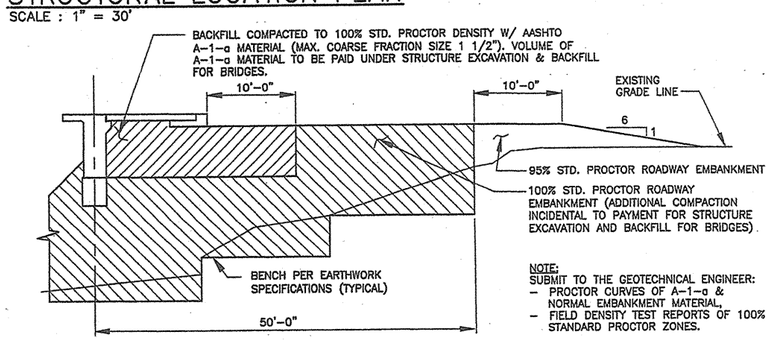

NOTE:
SUBMIT TO THE GEOTECHNICAL ENGINEER:
- PROCTOR CURVES OF A–1–a & NORMAL EMBANKMENT MATERIAL.
- FIELD DENSITY TEST REPORTS OF 100% STANDARD PROCTOR ZONES.

BACKFILL COMPACTION DETAIL AT ABUTMENTS

NO SCALE

AS–BUILT INFORMATION

CONTRACTOR Bound Montoya Const. Inc. DATE
WORK STAKED BY Billingsley Engr. DATE
INSPECTOR'S ACCEPTANCE BY COA DATE
FIELD VERIFICATION BY COA/WCL DATE
DRAWINGS CORRECTED BY WCL DATE 3/07
MICRO–FILM INFORMATION
RECORDED BY DATE
NO.

BENCH MARKS

THE STA. IS A USGS TABLET STAMPED "BLACK–2 1977" SET FLUSH W/ THE GROUND. THE STA. IS LOCATED 8.5 MI. N.W. OF DOWNTOWN ALBUQ. TO REACH THE STA. FROM THE INTX OF COORS/I–40 GO N. ON COORS 5.8 MI. TO PARADISE BLVD. TURN LEFT GO W. ON PARADISE BLVD. 1.1 MI. TO GOLF COURSE RD. TURN RIGHT GO N. ON GOLF COURSE RD 1.3 MI. TO McMAHON BLVD. THE STA. IS ON THE LEFT.

ELEVATION = 5213.926 FT. (2ND ORDER) (NGVD29)

SURVEY INFORMATION

FIELD NOTES

NO.	BY	DATE

ENGINEER'S SEAL

GARY W. KINCHEN
NEW MEXICO
14368
REGISTERED PROFESSIONAL ENGINEER
October 28, 2005

NO.	DATE	REMARKS	BY
4	5–06–06	DESIGN REVISION	CRH

REVISIONS

WILSON & COMPANY, ENGINEERS & ARCHITECTS

		DATE
DESIGNED BY	GWK	OCT 2005
DRAWN BY	CRH	OCT 2005
CHECKED BY	SFP	OCT 2005

CITY OF ALBUQUERQUE
DEPARTMENT OF MUNICIPAL DEVELOPMENT
TRANSPORTATION DIVISION

McMAHON BLVD. EXTENSION – LAS CALABACILLAS BRIDGE

STRUCTURAL LOCATION PLAN

Design Review Committee	City Engineer Approval	Last Design Update	Mo./Day/Yr.	Mo./Day/Yr.

City Project No.	Zone Map No.	Sheet	Of
COA 681602	A–10–Z	5–3	

WILSON & COMPANY

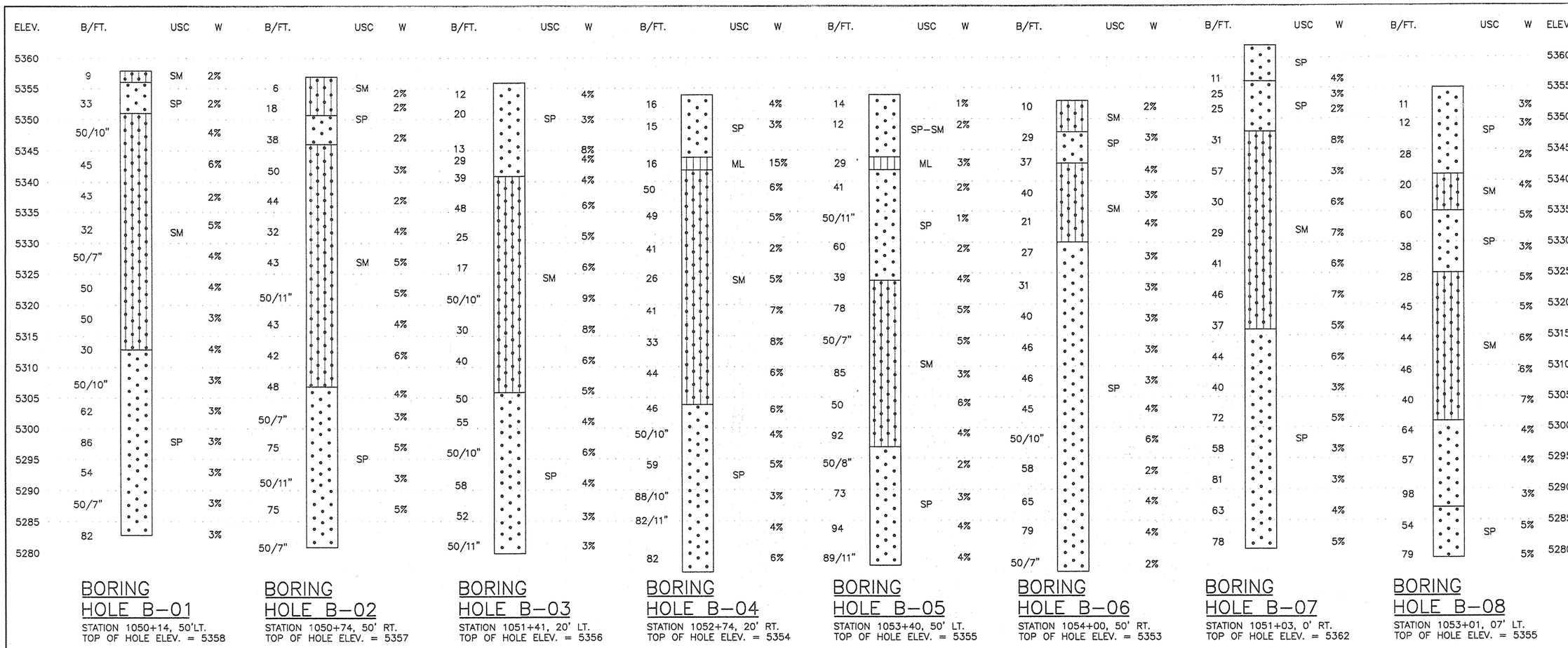

BORING HOLE B-01
STATION 1050+14, 50' LT.
TOP OF HOLE ELEV. = 5358

BORING HOLE B-02
STATION 1050+74, 50' RT.
TOP OF HOLE ELEV. = 5357

BORING HOLE B-03
STATION 1051+41, 20' LT.
TOP OF HOLE ELEV. = 5356

BORING HOLE B-04
STATION 1052+74, 20' RT.
TOP OF HOLE ELEV. = 5354

BORING HOLE B-05
STATION 1053+40, 50' LT.
TOP OF HOLE ELEV. = 5355

BORING HOLE B-06
STATION 1054+00, 50' RT.
TOP OF HOLE ELEV. = 5353

BORING HOLE B-07
STATION 1051+03, 0' RT.
TOP OF HOLE ELEV. = 5362

BORING HOLE B-08
STATION 1053+01, 07' LT.
TOP OF HOLE ELEV. = 5355

UNIFIED SOIL CLASSIFICATIONS

MAJOR DIVISIONS		SYMBOL	NAME
COURSE GRAINED SOILS	GRAVEL AND GRAVELLY SOILS	GW	WELL GRADED GRAVELS OR GRAVEL-SAND MIXTURES LITTLE OR NO FINES.
		GP	POORLY GRADED GRAVELS OR GRAVEL-SAND MIXTURES LITTLE OR NO FINES.
		GM	SILTY GRAVELS, GRAVEL-SAND-SILT MIXTURES
		GC	CLAYEY GRAVELS, GRAVEL-SAND-CLAY MIXTURES
	SAND AND SANDY SOILS	SW	WELL GRADED SANDS OR GRAVELLY SANDS LITTLE OR NO FINES.
		SP	POORLY GRADED SANDS OR GRAVELLY SANDS LITTLE OR NO FINES.
		SM	SILTY SANDS, SAND-SILT MIXTURES
		SC	CLAYEY SANDS, SAND-CLAY MIXTURES
FINE GRAINED SOILS	SILTS AND CLAYS LL < 50	ML	INORGANIC SILTS AND VERY FINE SANDS, ROCK FLOUR, SILTY OR CLAYEY FINE SANDS OR CLAYEY SILTS WITH SLIGHT PLASTICITY
		CL	INORGANIC CLAYS OF LOW TO MEDIUM PLASTICITY, GRAVELLY CLAYS, SANDY CLAYS, SILTY CLAYS, LEAN CLAYS
	SILTS AND CLAYS LL > 50	MH	INORGANIC SILTS, MICACEOUS OR DIATOMACEOUS FINE SANDY OR SILTY SOILS, ELASTIC SILTS
		CH	INORGANIC CLAYS OF HIGH PLASTICITY, FAT CLAYS
UNCLASSIFIED MATERIAL		NONE	NON-CLASSIFIED MATERIAL (i.e. OVERBURDEN, PAVEMENT, COAL MINE WASTE,SLAG,RUBBLE,TALUS,etc.) INCLUDE VISUAL DESCRIPTION

FOUNDATION NOTES

1. CONSTRUCT DRILLED SHAFT FOUNDATIONS PER SUPPLEMENTAL TECHNICAL SPECIFICATION 560. PROVIDE FOR PILE INTEGRITY TESTING PER SUPPLEMENTAL TECHNICAL SPECIFICATION 561.
2. DRILLED SHAFTS SIZES ARE 36" DIAMETER AT ABUTMENTS AND 72" DIAMETER AT PIERS. SEE ABUTMENT AND PIER PLAN AND ELEVATION SHEETS FOR DRILLED SHAFT LAYOUTS.
3. MINIMUM COMPRESSIVE STRENGTH FOR DRILLED SHAFT CONCRETE IS 3000 PSI AT 28 DAYS.
4. CAVING POTENTIAL: SOME OF THE SOILS ENCOUNTERED IN THE SOIL BORINGS ARE PRONE TO CAVING. FINAL DRILLED SHAFT VOLUME MAY EXCEED THE "NEAT" VOLUME. PROTECT HOLES FROM EXCESSIVE CAVING USING APPROVED METHODS SUCH AS TEMPORARY CASING OR SLURRY.
5. SURFACE TEMPORARY CASING IS REQUIRED TO A DEPTH OF 15' BELOW GROUND SURFACE TO PREVENT CAVING OF LOOSER SURFACE ALLUVIAL SOILS.
6. PRE-QUALIFICATION IS REQUIRED FOR THE FOUNDATION CONTRACTOR AS COVERED IN SUPPLEMENTAL TECHNICAL SPECIFICATION 560.
7. PROVIDE SUPPORT OF REINFORCING CAGES DURING FABRICATION, ERECTION AND PLACEMENT OF CONCRETE. SUBMIT PLANS SHOWING REINFORCING CAGE SUPPORT, METHODS OF ERECTION AND CENTERING DEVICES TO THE PROJECT ENGINEER FOR REVIEW AND APPROVAL PRIOR TO CONSTRUCTION.
8. OBTAIN PROJECT ENGINEER'S APPROVAL FOR ANY CONSTRUCTION JOINTS NOT SHOWN ON THE PLANS PRIOR TO CONSTRUCTION.
9. CONDUIT FOR INTEGRITY TESTING: TESTING WILL BE PERFORMED IN 1 SHAFT AT EACH ABUTMENT AND 2 SHAFTS AT EACH PIER. TEST SHAFTS WILL BE AS DIRECTED BY PROJECT ENGINEER. PLACE 2" PVC, SCH 40 ELECTRICAL CONDUIT AS SHOWN, FROM BOTTOM OF CAGE TO 1'-0" ABOVE TOP OF DRILLED SHAFTS WITH GLUED CAP BOTTOM AND THREADED CAP TOP END. SECURELY FASTEN CONDUIT TO ALTERNATE TIES, TYPICAL. ALL MATERIAL AND LABOR TO INSTALL THE CONDUITS IS INCIDENTAL TO THE WORK. FILL ALL PVC CONDUITS WITH WATER IMMEDIATELY AFTER CONCRETE PLACEMENT. ADDITIONAL INTEGRITY TESTING THAT IS REQUIRED DUE TO NOT FILLING CONDUITS AS SPECIFIED, RESULTING IN INCONCLUSIVE READINGS OR DUE TO BROKEN OR PLUGGED PVC TUBES, WILL NOT BE PAID BY THE CITY.
10. DRILLED SHAFT INTEGRITY TESTING WILL BE PERFORMED APPROXIMATELY 24 HOURS AFTER CONCRETE PLACEMENT. THE CROSSHOLE SONIC TEST WILL BE CONDUCTED THROUGH ALL OF THE 2" PVC CONDUITS. INSURE CONDUIT IS TIED PLUMB AND STRAIGHT RELATIVE TO REINFORCING CAGE SO THAT ULTRASONIC PROBE CAN BE LOWERED FREELY TO THE SHAFT BOTTOM. SEE SUPPLEMENTAL TECHNICAL SPECIFICATION 560 FOR DEFECTIVE SHAFTS AND MEASURES TO CORRECT. ALL ADDITIONAL MATERIALS AND LABOR WILL NOT BE PAID BY THE CITY AND CONTRACT TIME WILL NOT BE EXTENED.
11. SOIL BORING FIELD LOGS AND TEST REPORT SUMMARIES ARE AVAILABLE FOR INSPECTION. CONTACT AMEC EARTH & ENVIROMENTAL, INC., 8519 JEFFERSON NE, ALBUQUERQUE, NM 87113, AND AT (505) 821-1801. REPORT NUMBER 4-517-000094, DATED JULY, 2005.

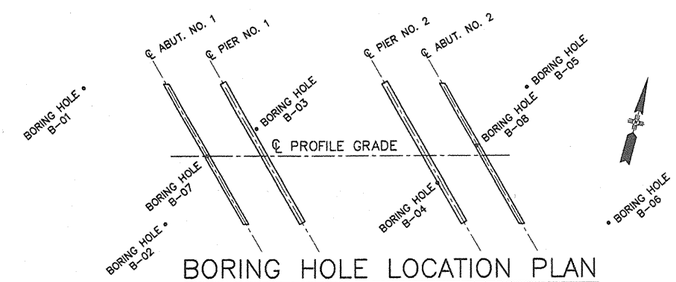

BORING HOLE LOCATION PLAN
NO SCALE

AS-BUILT INFORMATION
CONTRACTOR David Montoya Const. Inc. DATE
WORK STAKED BY Billingsley Eng. DATE
INSPECTOR'S ACCEPTANCE BY COA DATE
FIELD VERIFICATION BY COA/WCI DATE 3/07
DRAWINGS CORRECTED BY WCI DATE
MICRO-FILM INFORMATION
RECORDED BY DATE
NO.

BENCH MARKS
THE STA. IS A USGS TABLET STAMPED "BLACK-2 1977" SET FLUSH W/ THE GROUND. THE STA. IS LOCATED 8.5 MI. N.W. OF DOWNTOWN ALBUQ. TO REACH THE STA. FROM THE INTX. OF COORS/I-40 GO N. ON COORS 5.8 MI. TO PARADISE BLVD. TURN LEFT GO W. ON PARADISE BLVD. 1.1 MI. TO GOLF COURSE RD. TURN RIGHT GO N. ON GOLF COURSE RD. 1.3 MI. TO McMAHON BLVD. THE STA. IS ON THE LEFT.

SURVEY INFORMATION
FIELD NOTES
NO. BY DATE

ENGINEER'S SEAL
GARY W. KINCHEN NEW MEXICO 14366 PROFESSIONAL ENGINEER
OCTOBER 28, 2005

NO. DATE REMARKS BY
REVISIONS
WILSON & COMPANY, ENGINEERS & ARCHITECTS
DESIGNED BY GWK DATE OCT 2005
DRAWN BY CRH DATE OCT 2005
SUPERVISED BY SEB

CITY OF ALBUQUERQUE
DEPARTMENT OF MUNICIPAL DEVELOPMENT
TRANSPORTATION DIVISION
McMAHON BLVD. EXTENSION – LAS CALABACILLAS BRIDGE
FOUNDATION DATA

Design Review Committee: APPROVED — DESIGN REVIEW COMMITTEE
City Engineer Approval: APPROVED — CITY ENGINEER
Last Design Update: Mo./Day/Yr. Mo./Day/Yr.

City Project No. COA 681602 | Zone Map No. A-10-Z | Sheet 5-4 | Of

WILSON & COMPANY

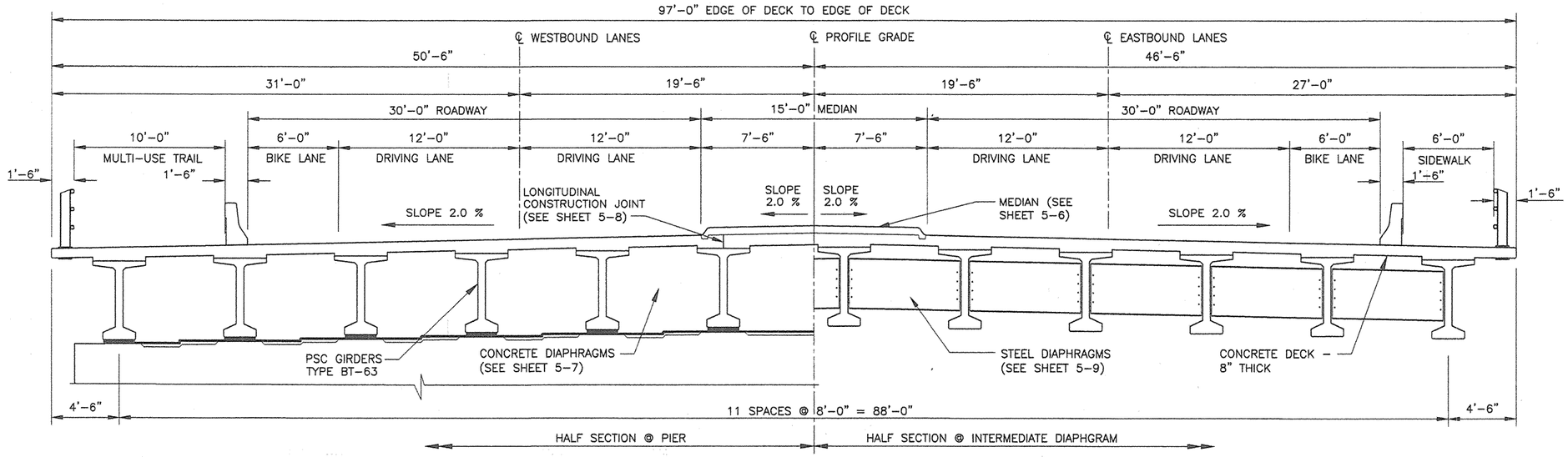

TYPICAL SECTION

SCALE: 1/4" = 1'-0"

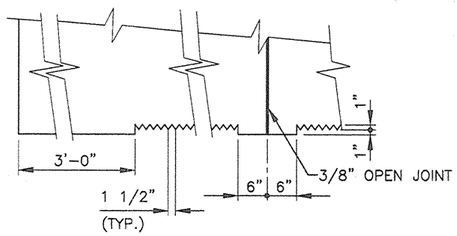

SECTION @ ABUTMENT

SECTION @ JOINT

NOTES:

1. OBTAIN ENGINEER'S APPROVAL OF FORM LINERS PRIOR TO USE IN THE CONSTRUCTION.
2. LABOR AND MATERIALS TO INSTALL THE FRACTURED FIN SURFACE TREATMENT ARE INCIDENTAL TO THE SUBSTRUCTURE CONCRETE BID ITEM.

BARRIER FRACTURED FIN SURFACE TREATMENT DETAIL

NO SCALE

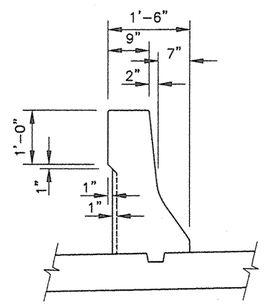

NOTE:
ALL OTHER DIMENSIONS NOT SHOWN REMAIN UNCHANGED PER SHEETS 5-29 THRU 5-32.

BARRIER DIMENSIONAL CHANGES REQUIRED BY FRACTURED FIN SURFACE TREATMENT

SCALE: 3/4" = 1'-0"

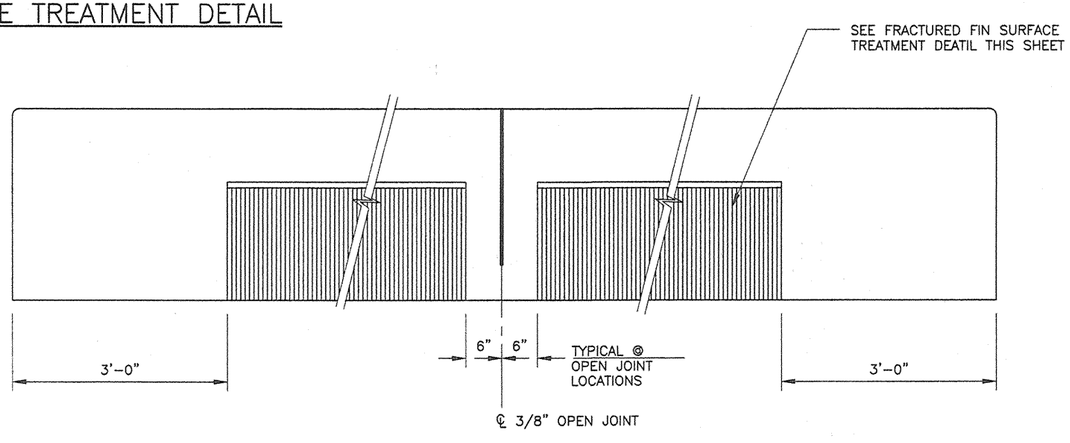

ELEVATION OF BARRIER @ EXTERIOR FACE

SCALE: 1" = 1'-0"

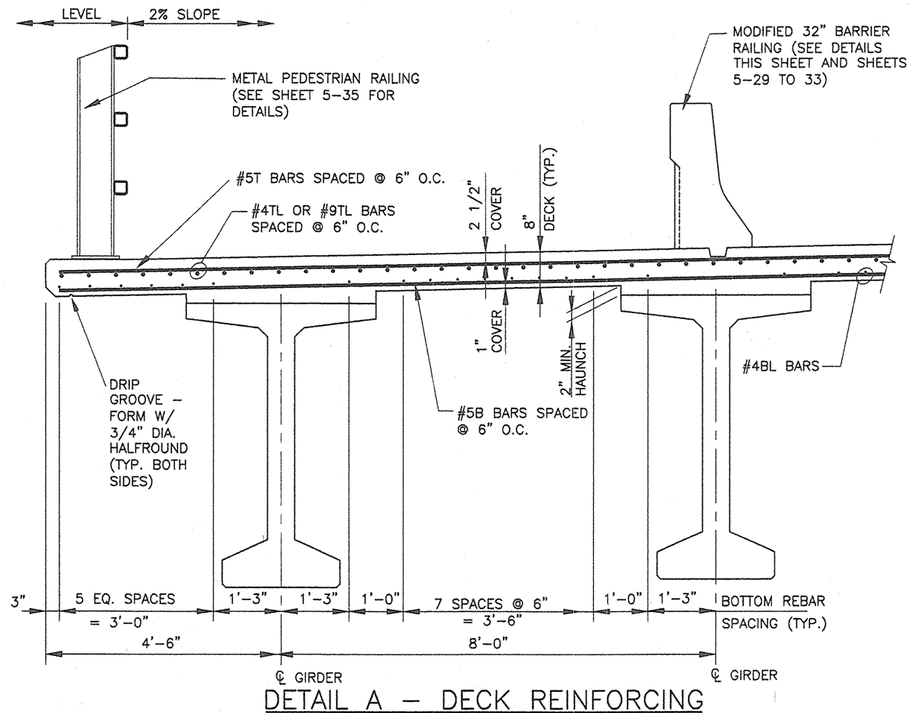

DETAIL A - DECK REINFORCING

SCALE: 3/4" = 1'-0"

AS-BUILT INFORMATION

CONTRACTOR David Thomson Const. Inc. DATE
WORK STAKED BY Billingsley Eng. DATE
INSPECTOR'S ACCEPTANCE BY COA DATE
FIELD VERIFICATION BY COA DATE
DRAWINGS CORRECTED BY WCI DATE 3/07

BENCH MARKS

THE STA. IS A USGS TABLET STAMPED "BLACK-2 1977" SET FLUSH W/ THE GROUND. THE STA. IS LOCATED 8.5 MI. N.W. OF DOWNTOWN ALBUQ. TO REACH THE STA. FROM THE INTX OF COORS/I-40 GO N. ON COORS 5.8 MI. TO PARADISE BLVD. TURN LEFT GO W. ON PARADISE BLVD. 1.1 MI. TO GOLF COURSE RD. TURN RIGHT GO N. ON GOLF COURSE RD. 1.3 MI. TO McMAHON BLVD. THE STA. IS ON THE LEFT.

ELEVATION = 5213.926 FT. (2ND ORDER) (NGVD29)

SURVEY INFORMATION

FIELD NOTES

NO.	BY	DATE

ENGINEER'S SEAL

GARY W. KINCHEN NEW MEXICO 14366 REGISTERED PROFESSIONAL ENGINEER
OCTOBER 28, 2005

REVISIONS

NO.	DATE	REMARKS	BY

WILSON & COMPANY, ENGINEERS & ARCHITECTS

DESIGNED BY	GWK	DATE OCT 2005
DRAWN BY	CRH	DATE OCT 2005
CHECKED BY	SFP	DATE OCT 2005

CITY OF ALBUQUERQUE
DEPARTMENT OF MUNICIPAL DEVELOPMENT
TRANSPORTATION DIVISION

McMAHON BLVD. EXTENSION - LAS CALABACILLAS BRIDGE

TYPICAL SECTION

Design Review Committee: APPROVED — DESIGN REVIEW COMMITTEE

City Engineer Approval: APPROVED — CITY ENGINEER

Last Design Update | Mo./Day/Yr. | Mo./Day/Yr.

City Project No.	Zone Map No.	Sheet	Of
COA 681602	A-10-Z	5-5	

WILSON & COMPANY

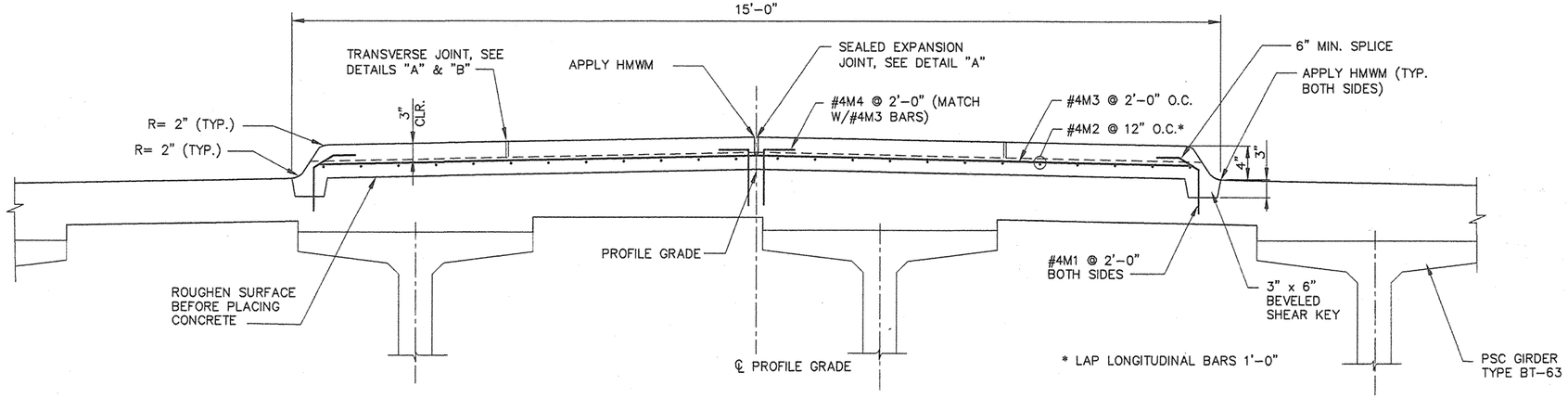

CONCRETE MEDIAN SECTION

NO SCALE

(SECTION ON APPROACH SLABS SIMILAR)

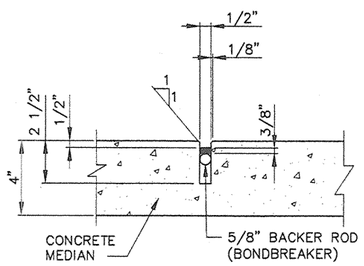

SEALED EXPANSION JOINT
LONGITUDINAL & TRANSVERSE

DETAIL "A"

NO SCALE

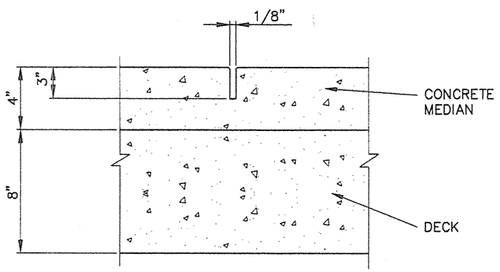

CONTRACTION JOINT
LONGITUDINAL & TRANSVERSE

DETAIL "B"

NO SCALE

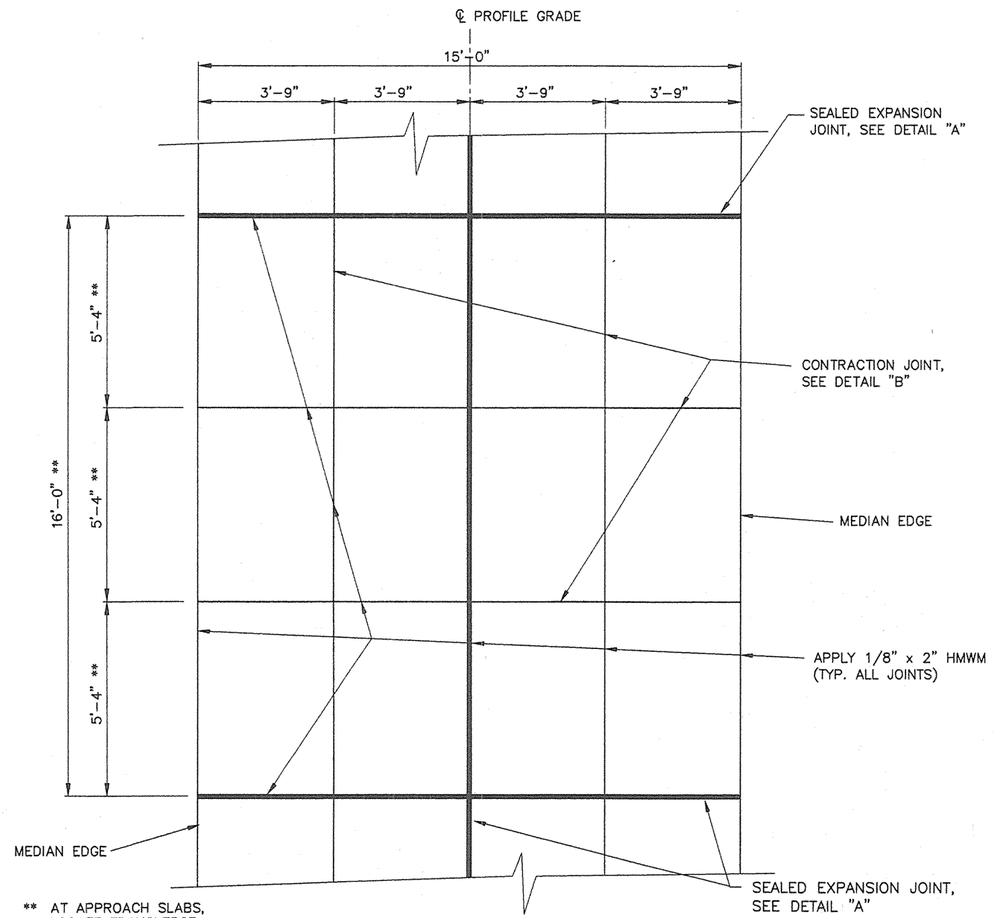

** AT APPROACH SLABS, LOCATE TRANSVERSE CONTRACTION JOINTS AT 1/3 POINTS (4'-8" SPACING).

MEDIAN PARTIAL PLAN SHOWNING JOINT LOCATIONS

NO SCALE

CONCRETE MEDIAN NOTES

1. CONSTRUCT MEDIAN JOINTS FOR FULL LENGTH OF BRIDGE & APPROACH SLABS.
2. COORDINATE WITH PROJECT ENGINEER FOR MEDIAN SURFACE PATTERNS, TEXTURING AND COLORING.
3. AVOID INSTALLING TRANSVERSE SEALED EXPANSION JOINTS AT TRANSVERSE BAR LOCATIONS.
4. HMWM = HIGH MOLECULAR WEIGHT METHACRYLATE, SUPPLEMENTAL TECHNICAL SPECIFICATION 591.
5. SEALED EXPANSION JOINTS SEE SUPPLEMENTAL TECHNICAL SPECIFICATIONS 580.
6. THE COST OF ALL ITEMS ASSOCIATED WITH THE MEDIAN CONSTRUCTION, EXCEPT FOR SEALED EXPANSION JOINTS, IS INCLUDED IN AND INCIDENTAL TO THE BID ITEM "SUPERSTRUCTURE CONCRETE".
7. THE COST OF SEALED EXPANSION JOINTS IS INCLUDED IN THE BID ITEM "SEALED EXPANSION JOINTS", AND PAID FOR IN ACCORDANCE WITH SUPPLEMENTAL TECHNICAL SPECIFICATION 580.

AS-BUILT INFORMATION
CONTRACTOR David Montoya Const. Inc. DATE
STAKED BY Billingsley Engr. DATE
INSPECTOR'S ACCEPTANCE COA DATE
FIELD VERIFICATION BY COA/WCL DATE
DRAWINGS CORRECTED BY WCL DATE 3/07
MICRO-FILM INFORMATION
RECORDED BY DATE
NO.

BENCH MARKS
THE STA. IS A USGS TABLET STAMPED "BLACK-2 1977" SET FLUSH W/ THE GROUND. THE STA. IS LOCATED 8.5 MI. N.W. OF DOWNTOWN ALBUQ. TO REACH THE STA. FROM THE INTX OF COORS/I-40 GO N. ON COORS 5.8 MI. TO PARADISE BLVD. TURN LEFT GO W. ON PARADISE BLVD. 1.1 MI. TO GOLF COURSE RD. TURN RIGHT GO N. ON GOLF COURSE RD 1.3 MI. TO McMAHON BLVD. THE STA. IS ON THE LEFT.
ELEVATION = 5213.926 FT. (2ND ORDER) (NGVD29)

SURVEY INFORMATION
FIELD NOTES

NO.	BY	DATE

ENGINEER'S SEAL
GARY W. KINCHEN NEW MEXICO 14368 PROFESSIONAL ENGINEER
OCTOBER 28, 2005

NO.	DATE	REMARKS	BY

REVISIONS

WILSON & COMPANY, ENGINEERS & ARCHITECTS
DESIGNED BY GWK DATE OCT 2005
DRAWN BY CRH DATE OCT 2005
CHECKED BY SFP DATE OCT 2005

CITY OF ALBUQUERQUE
DEPARTMENT OF MUNICIPAL DEVELOPMENT
TRANSPORTATION DIVISION

McMAHON BLVD. EXTENSION – LAS CALABACILLAS BRIDGE
MEDIAN DETAILS

Design Review Committee: APPROVED NOV 17 2005 DESIGN REVIEW COMMITTEE
City Engineer Approval: APPROVED CITY ENGINEER
Last Design Update Mo./Day/Yr. Mo./Day/Yr.

City Project No. COA 681602 | Zone Map No. A-10-Z | Sheet 5-6 Of

WILSON & COMPANY

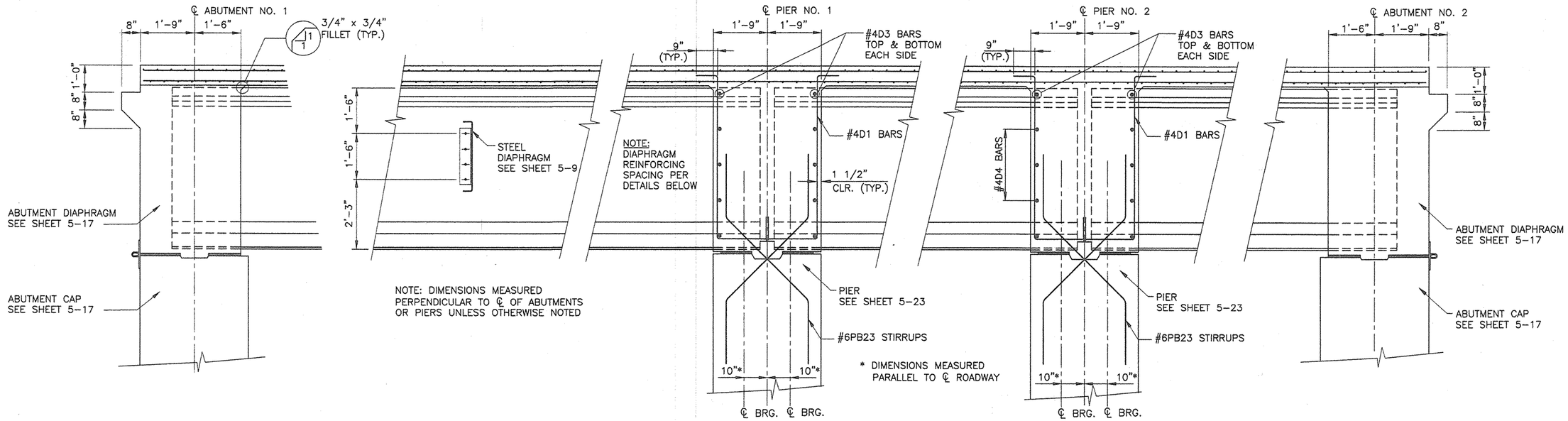

ABUTMENT NO. 1 | TYPICAL INTERMEDIATE DIAPHRAGM | PIER NO. 1 | PIER NO. 2 | ABUTMENT NO. 2

LONGITUDINAL SECTION

SCALE: 1:20

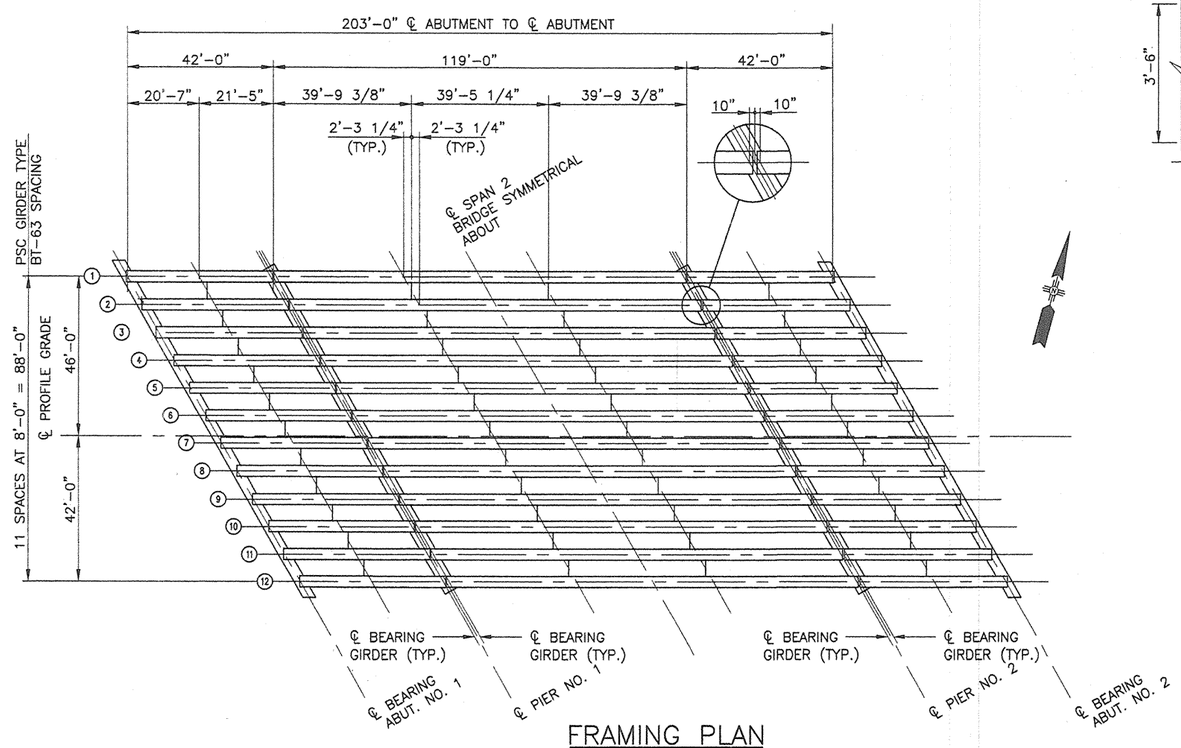

FRAMING PLAN

SCALE: 1:250

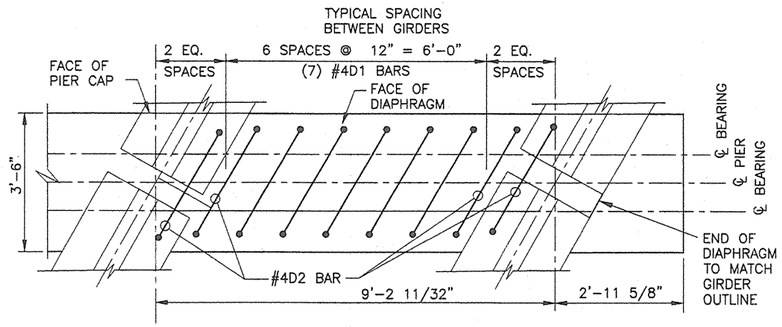

PIER DIAPHRAGM REINFORCING PLAN

SCALE: 1:20

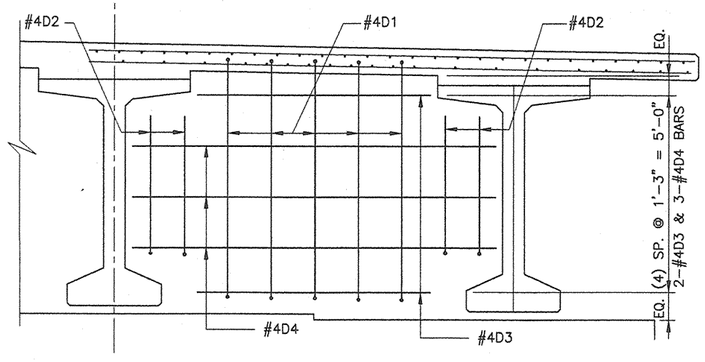

PIER DIAPHRAGM REINFORCING ELEVATION

SCALE: 1:20

AS-BUILT INFORMATION
CONTRACTOR David Montoya Const. Inc. DATE
STARTED BY Gallingsley Engr. DATE
INSPECTOR'S ACCEPTANCE BY COA DATE
FIELD VERIFICATION BY COA/WCI DATE
DRAWINGS CORRECTED BY WCI DATE 3/03
MICRO-FILM INFORMATION
RECORDED BY DATE
NO.

BENCH MARKS
THE STA. IS A USGS TABLET STAMPED "BLACK-2 1977" SET FLUSH W/ THE GROUND. THE STA. IS LOCATED 8.5 MI. N.W. OF DOWNTOWN ALBUQ. TO REACH THE STA. FROM THE INTX OF COORS/I-40 GO N. ON COORS 5.8 MI. TO PARADISE BLVD. TURN LEFT GO W. ON PARADISE BLVD. 1.1 MI. TO GOLF COURSE RD. TURN RIGHT GO N. ON GOLF COURSE RD. 1.3 MI. TO McMAHON BLVD. THE STA. IS ON THE LEFT.
ELEVATION = 5213.926 FT. (2ND ORDER) (NGVD29)

SURVEY INFORMATION
FIELD NOTES
BY DATE

ENGINEER'S SEAL
GARY W. KINCHEN NEW MEXICO 14365 PROFESSIONAL ENGINEER
OCTOBER 28, 2005

NO.	DATE	REMARKS	BY
		REVISIONS	

WILSON & COMPANY, ENGINEERS & ARCHITECTS
DESIGNED BY GMK DATE OCT 2005
DRAWN BY CRH DATE OCT 2005
CHECKED BY SFP DATE OCT 2005

CITY OF ALBUQUERQUE
DEPARTMENT OF MUNICIPAL DEVELOPMENT
TRANSPORTATION DIVISION

McMAHON BLVD. EXTENSION – LAS CALABACILLAS BRIDGE
FRAMING PLAN AND LONGITUDINAL SECTION

Design Review Committee: APPROVED — DESIGN REVIEW COMMITTEE
City Engineer Approval: APPROVED — CITY ENGINEER
Last Design Update | Mo./Day/Yr. | Mo./Day/Yr.

City Project No.	Zone Map No.	Sheet	Of
COA 681602	A-10-Z	5-7	

WILSON & COMPANY

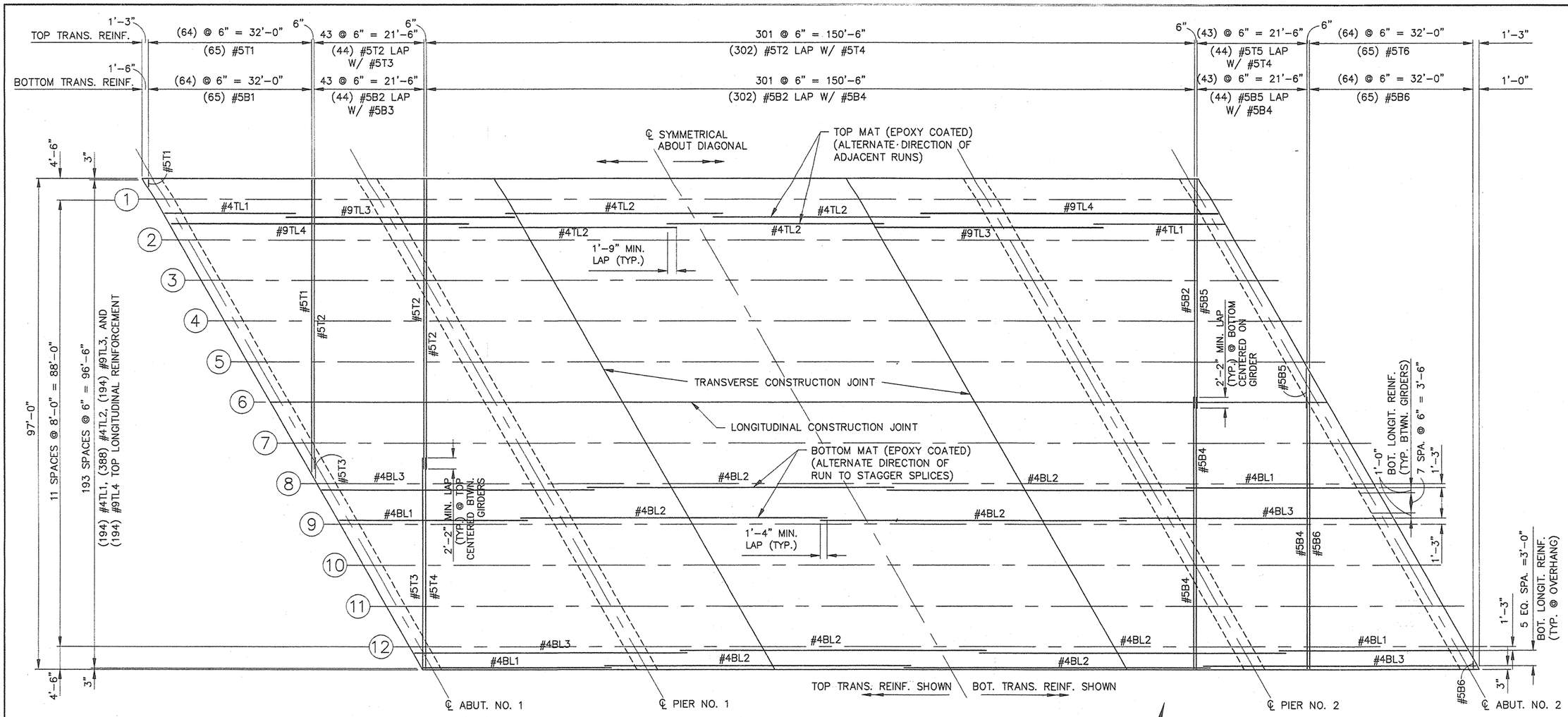

DECK REINFORCING PLAN

SCALE: 1:120

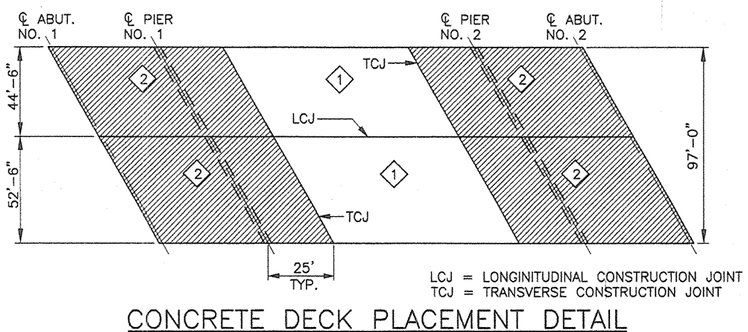

CONCRETE DECK PLACEMENT DETAIL

NO SCALE

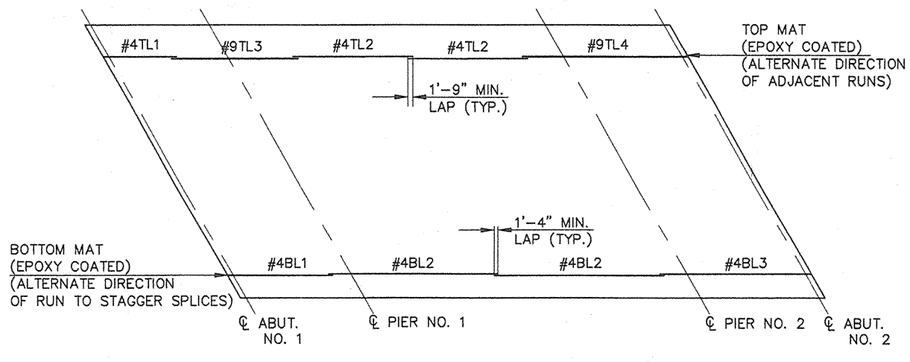

LONGITUDINAL REINFORCEMENT DIAGRAM

NO SCALE

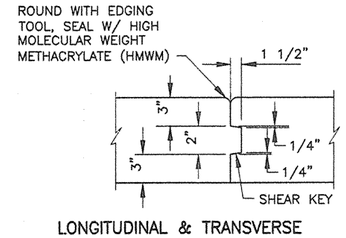

LONGITUDINAL & TRANSVERSE

CONSTRUCTION JOINT

NO SCALE

NOTES:

A. PLACE CONCRETE TO THE WIDTHS SHOWN ABOVE AS BOUNDED BY THE LONGITUDINAL CONSTRUCTION JOINT, IN THE SEQUENCE SHOWN, AND AT A FORWARD RATE OF PROGRESS NOT LESS THAT 30 FEET/HOUR.

B. PLACEMENTS 1 MAY BE MADE ON THE SAME OR SEPARATE DAYS, PLACEMENTS 2 MAY BE MADE ON THE SAME OR SEPARATE DAYS.

C. DO NOT MAKE PLACEMENT 2 UNTIL CONCRETE IN ADJACENT PLACEMENT 1 AREAS HAS BEEN IN PLACE AT LEAST 48 HOURS.

D. DO NOT USE SET RETARDANT IF ATMOSPHERIC TEMPERATURE AT TIME OF PLACEMENT IS LESS THAN 60° F.

AS-BUILT INFORMATION

CONTRACTOR Daold Morrison Const. Inc. DATE
STAKED BY Billingsley Engr. DATE
INSPECTOR'S ACCEPTANCE COA DATE
FIELD VERIFICATION BY COA/WCL DATE
DRAWINGS CORRECTED BY WCL DATE 3/07
MICRO-FILM INFORMATION
RECORDED BY DATE
NO.

BENCH MARKS

THE STA. IS A USGS TABLET STAMPED "BLACK-2 1977" SET FLUSH W/ THE GROUND. THE STA. IS LOCATED 8.5 MI. N.W. OF DOWNTOWN ALBUQ. TO REACH THE STA. FROM THE INTX OF COORS/I-40 GO N. ON COORS 5.8 MI. TO PARADISE BLVD. TURN LEFT GO W. ON PARADISE BLVD. 1.1 MI. TO GOLF COURSE RD. TURN RIGHT GO N. ON GOLF COURSE RD. 1.3 MI. TO McMAHON BLVD. THE STA. IS ON THE LEFT.

ELEVATION = 5213.926 FT. (2ND ORDER) (NGVD29)

SURVEY INFORMATION

FIELD NOTES

NO.	BY	DATE

ENGINEER'S SEAL

GARY W. KINCHEN NEW MEXICO 14366 PROFESSIONAL ENGINEER
OCTOBER 28, 2005

NO.	DATE	REMARKS	BY

REVISIONS

WILSON & COMPANY, ENGINEERS & ARCHITECTS

DESIGNED BY	GWK	DATE OCT 2005
DRAWN BY	CRH	DATE OCT 2005
CHECKED BY	SFP	DATE OCT 2005

CITY OF ALBUQUERQUE
DEPARTMENT OF MUNICIPAL DEVELOPMENT
TRANSPORTATION DIVISION

McMAHON BLVD. EXTENSION – LAS CALABACILLAS BRIDGE

DECK REINFORCEMENT PLAN

Design Review Committee: APPROVED NOV 1 2005 DESIGN REVIEW COMMITTEE
City Engineer Approval: APPROVED NOV 1 2005 CITY ENGINEER
Last Design Update | Mo./Day/Yr. | Mo./Day/Yr.

City Project No.	Zone Map No.	Sheet	Of
COA 681602	A-10-Z	5-8	

WILSON & COMPANY

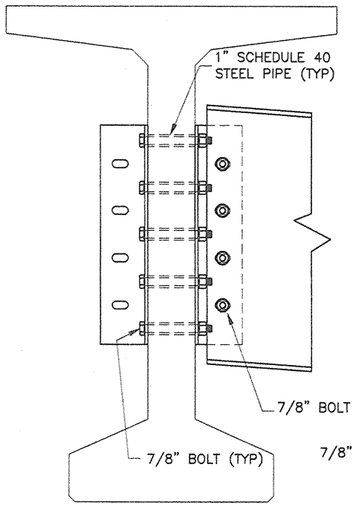

INTERIOR GIRDER
CONNECTION DETAIL

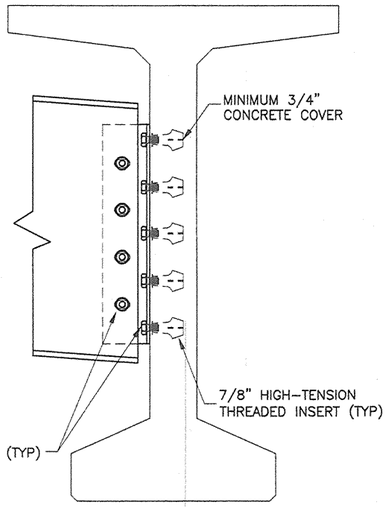

EXTERIOR GIRDER
CONNECTION DETAIL

m = SLOPE OF BENT PLATE DIAPHRAGM (SEE BRIDGE PLANS FOR ELEVATIONS AT CONNECTION POINTS).
A = THICKNESS OF GIRDER WEB PLUS 3" (SEE TABLE).
B = DISTANCE FROM TOP OF STEEL DIAPHRAGM TO CENTER OF FIRST HOLE.
C = DISTANCE FROM TOP OF BEAM TO ℄ OF FIRST INSERT.
D = DISTANCE FROM CLIP ANGLE EDGE TO CENTER OF FIRST HOLE (CLIP ANGLE/DIAPHRAGM CONNECTION).
H = DEPTH OF BENT PLATE DIAPHRAGM.
L = LENGTH OF BACK PLATES AND CLIP ANGLES.
N = NUMBER OF BOLT SPACES IN GIRDER/CLIP ANGLE CONNECTION.
S1 = HOLE SPACING.

PRESTRESSED CONCRETE BEAM TYPE	H (in)	A (in)	B (in)	C (in)	D (in)	L (in)	N	S1 (in)	DIAPHRAGM UNIT WEIGHT (lb/ft)*	CLIP ANGLE WEIGHT (lb)	BACK PLATE WEIGHT (lb)
TYPE 36	15	9	4 1/2	12	3 1/2	13	3	3	28	16	7
TYPE 45	15	10	4 1/2	16 1/2	3 1/2	13	3	3	28	16	7
TYPE 54	21	11	6 1/2	19 1/2	4	16	3	4	36	20	9
TYPE 63	33	11	7 1/2	16 1/2	5	28	4	6	51	35	15
TYPE 72	33	11	7 1/2	21	5	28	4	6	51	35	15
TYPE BT-54	33	9	7 1/2	13 1/2	5	28	4	6	51	35	15
TYPE BT-63	**33**	**9**	**7 1/2**	**18**	**5**	**28**	**4**	**6**	**51**	**35**	**15**
TYPE BT-72	33	9	7 1/2	22 1/2	5	28	4	6	51	35	15
TYPE 63-MODIFIED	33	9	7 1/2	16 1/2	5	28	4	6	51	35	15
TYPE 72-MODIFIED	33	9	7 1/2	21	5	28	4	6	51	35	15

* MULTIPLY BY DIAPHRAGM LENGTH (S − A) TO OBTAIN TOTAL DIAPHRAGM WEIGHT.

GENERAL NOTES

1. STRUCTURAL STEEL: AASHTO M 270, GRADE 50W, OR AASHTO M 270, GRADE 36, HOT-DIPPED GALVANIZED STEEL. IF WEATHERING STEEL IS USED, SAND BLAST ALL ELEMENTS TO SSPC SP-6 AND WET PRIOR TO SHIPPING. PAINTING IS NOT REQUIRED.
2. BOLTS: ASTM A 307. IF WEATHERING STEEL IS USED, USE TYPE 3 WEATHERING STEEL BOLTS; IF GALVANIZED STEEL IS USED, GALVANIZE BOLTS PER AASHTO M 298.
3. FOR BRIDGES WITH NO SKEW, USE THE INTERIOR GIRDER CONNECTION DETAIL SHOWN. FOR SKEWED BRIDGES, REPLACE THE OPPOSING CLIP ANGLE WITH THE BACK PLATE SHOWN BELOW. OFFSET DIAPHRAGMS ON ALL SKEWED BRIDGES TO FACILITATE THE INSTALLATION OF THE BACK PLATES.
4. TOLERANCE ON VERTICAL DISTANCE BETWEEN ANY TWO HOLES OR INSERTS: NO MORE THAN 1/16". TOLERANCE ON TOTAL LENGTH OF THE GROUP OF HOLES OR INSERTS: NO MORE THAN 1/16" FROM DESIGN LENGTH. ENSURE PROPER PLACEMENT OF INSERTS DURING GIRDER FABRICATION TO MEET TOLERANCES.
5. ATTACH CLIP ANGLES AND BACK PLATES TO THE PRESTRESSED GIRDERS AT THE GIRDER FABRICATION SITE PRIOR TO TRANSPORT. COMPLET DIAPHRAGM INSTALLATION PRIOR TO DECK PLACEMENT.
6. BENT PLATE DIAPHRAGMS, CLIP ANGLES AND BACK PLATES ARE PAID FOR UNDER ITEM 520.010 – STRUCTURAL STEEL FOR CONCRETE BRIDGES. BOLTS, NUTS AND WASHERS ARE INCIDENTAL TO THIS ITEM. THREADED INSERTS AND PIPE INSERTS ARE INCIDENTAL TO PRESTRESSED CONCRETE GIRDERS.
7. MAXIMUM BOLT INSTALLATION TENSION WHERE STEEL IS BEING FASTENED TO CONCRETE: 10 KIPS. PERFORM TESTS TO DETERMINE TORQUE NEEDED TO ACHIEVE THE SPECIFIED INSTALLATION TENSION.

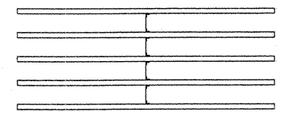

NORMAL (NO SKEW)

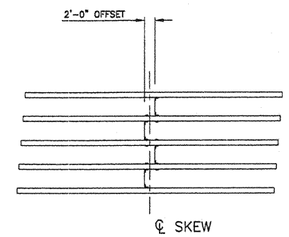

SKEW 0° TO 8°

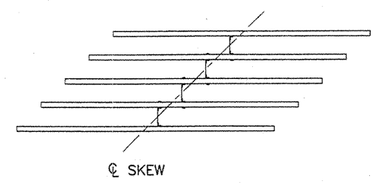

SKEW GREATER THAN 8°

DIAPHRAGM PLACEMENT PATTERNS
NO SCALE

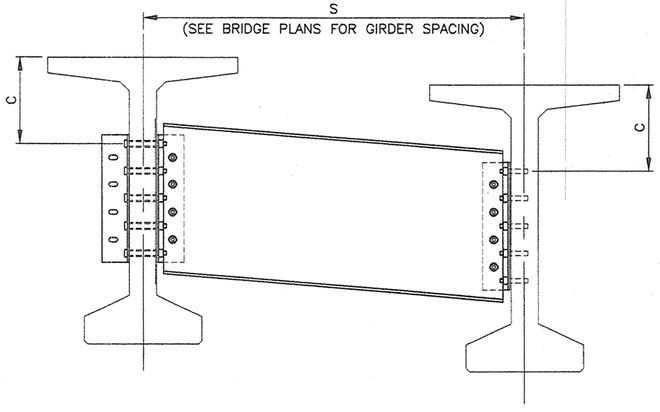

DIAPHRAGM ELEVATIONS

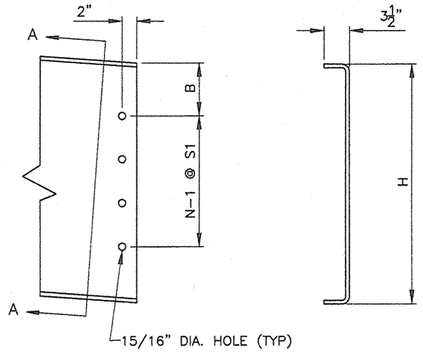

DIAPHRAGM END DETAIL SECTION A–A

3/8" BENT PLATE DIAPHRAGM
(SEE TABLE FOR HEIGHT "H")

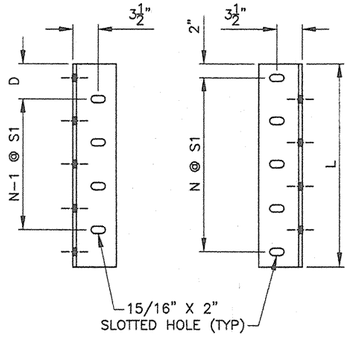

CLIP ANGLE DETAILS
L 6 x 6 x 3/8

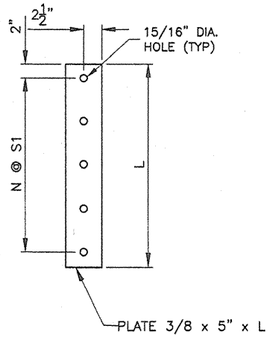

BACK PLATE DETAIL
(SEE NOTE 3)

AS-BUILT INFORMATION
CONTRACTOR Bond Martinez Const. Inc. DATE
STAKED BY Billingsley Engr. DATE
INSPECTOR'S ACCEPTANCE BY COA DATE
FIELD VERIFICATION BY COA/WCI DATE
DRAWINGS CORRECTED BY WCI DATE 3/07
MICRO-FILM INFORMATION
RECORDED BY DATE
NO.

BENCH MARKS
THE STA. IS A USGS TABLET STAMPED "BLACK-2 1977" SET FLUSH W/ THE GROUND. THE STA. IS LOCATED 8.5 MI. N.W. OF DOWNTOWN ALBUQ. TO REACH THE STA. FROM THE INTX OF COORS/I-40 GO N. ON COORS 5.8 MI. TO PARADISE BLVD. TURN LEFT GO W. ON PARADISE BLVD. 1.1 MI. TO GOLF COURSE RD. TURN RIGHT GO N. ON GOLF COURSE RD 1.3 MI. TO McMAHON BLVD. THE STA. IS ON THE LEFT.
ELEVATION = 5213.926 FT. (2ND ORDER) (NGVD29)

SURVEY INFORMATION
FIELD NOTES

NO.	BY	DATE

ENGINEER'S SEAL
GARY W. KINCHEN NEW MEXICO 14368 REGISTERED PROFESSIONAL ENGINEER
OCTOBER 28, 2005

NO.	DATE	REMARKS	BY
		REVISIONS	

WILSON & COMPANY, ENGINEERS & ARCHITECTS
DESIGNED BY GMK DATE OCT 2005
DRAWN BY CRH DATE OCT 2005
CHECKED BY SFP DATE OCT 2005

CITY OF ALBUQUERQUE
DEPARTMENT OF MUNICIPAL DEVELOPMENT
TRANSPORTATION DIVISION

McMAHON BLVD. EXTENSION – LAS CALABACILLAS BRIDGE
STEEL DIAPHRAGM DETAILS

Design Review Committee: APPROVED NOV 17 2005 DESIGN REVIEW COMMITTEE
City Engineer Approval: APPROVED NOV 17 2005 CITY ENGINEER
Last Design Update | Mo./Day/Yr. | Mo./Day/Yr.

City Project No. COA 681602 | Zone Map No. A-10-Z | Sheet 5-9 | Of

WILSON & COMPANY

LOCATION		GIRDER 1	2	3	4	5	6	7	8	9	10	11	12
ABUT. NO. 1 SPAN NO. 1	DECK ELEV.	5376.23	5376.34	5376.44	5376.55	5376.65	5376.76	5376.78	5376.57	5376.35	5376.14	5375.92	5375.70
	DECK THICKNESS	0.67	0.67	0.67	0.67	0.67	0.67	0.67	0.67	0.67	0.67	0.67	0.67
	HAUNCH	0.38	0.38	0.38	0.38	0.38	0.38	0.38	0.38	0.38	0.38	0.38	0.38
	GIRDER	5.25	5.25	5.25	5.25	5.25	5.25	5.25	5.25	5.25	5.25	5.25	5.25
	BEARING PAD *	0.11	0.11	0.11	0.11	0.11	0.11	0.11	0.11	0.11	0.11	0.11	0.11
	TOTAL "P" DIMEN.	6.409	6.409	6.409	6.409	6.409	6.409	6.409	6.409	6.409	6.409	6.409	6.409
	SEAT ELEVATION	5369.82	5369.93	5370.03	5370.14	5370.24	5370.35	5370.37	5370.16	5369.94	5369.73	5369.51	5369.30

LOCATION		GIRDER 1	2	3	4	5	6	7	8	9	10	11	12
PIER NO. 1 SPAN NO. 1	DECK ELEV.	5375.73	5375.84	5375.94	5376.04	5376.15	5376.25	5376.28	5376.06	5375.85	5375.63	5375.42	5375.20
	DECK THICKNESS	0.67	0.67	0.67	0.67	0.67	0.67	0.67	0.67	0.67	0.67	0.67	0.67
	HAUNCH	0.38	0.38	0.38	0.38	0.38	0.38	0.38	0.38	0.38	0.38	0.38	0.38
	GIRDER	5.25	5.25	5.25	5.25	5.25	5.25	5.25	5.25	5.25	5.25	5.25	5.25
	BEARING PAD *	0.37	0.37	0.37	0.37	0.37	0.37	0.37	0.37	0.37	0.37	0.37	0.37
	TOTAL "P" DIMEN.	6.672	6.672	6.672	6.672	6.672	6.672	6.672	6.672	6.672	6.672	6.672	6.672
	SEAT ELEVATION	5369.06	5369.16	5369.27	5369.37	5369.48	5369.58	5369.61	5369.39	5369.18	5368.96	5368.75	5368.53

LOCATION		GIRDER 1	2	3	4	5	6	7	8	9	10	11	12
PIER NO. 1 SPAN NO. 2	DECK ELEV.	5375.71	5375.82	5375.92	5376.02	5376.13	5376.23	5376.26	5376.04	5375.83	5375.61	5375.40	5375.18
	DECK THICKNESS	0.67	0.67	0.67	0.67	0.67	0.67	0.67	0.67	0.67	0.67	0.67	0.67
	HAUNCH	0.36	0.36	0.36	0.36	0.36	0.36	0.36	0.36	0.36	0.36	0.36	0.36
	GIRDER	5.25	5.25	5.25	5.25	5.25	5.25	5.25	5.25	5.25	5.25	5.25	5.25
	BEARING PAD *	0.37	0.37	0.37	0.37	0.37	0.37	0.37	0.37	0.37	0.37	0.37	0.37
	TOTAL "P" DIMEN.	6.652	6.652	6.652	6.652	6.652	6.652	6.652	6.652	6.652	6.652	6.652	6.652
	SEAT ELEVATION	5369.06	5369.16	5369.27	5369.37	5369.48	5369.58	5369.61	5369.39	5369.18	5368.96	5368.75	5368.53

LOCATION		GIRDER 1	2	3	4	5	6	7	8	9	10	11	12
PIER NO. 2 SPAN NO. 2	DECK ELEV.	5374.28	5374.38	5374.49	5374.59	5374.70	5374.80	5374.83	5374.61	5374.40	5374.18	5373.97	5373.75
	DECK THICKNESS	0.67	0.67	0.67	0.67	0.67	0.67	0.67	0.67	0.67	0.67	0.67	0.67
	HAUNCH	0.36	0.36	0.36	0.36	0.36	0.36	0.36	0.36	0.36	0.36	0.36	0.36
	GIRDER	5.25	5.25	5.25	5.25	5.25	5.25	5.25	5.25	5.25	5.25	5.25	5.25
	BEARING PAD *	0.37	0.37	0.37	0.37	0.37	0.37	0.37	0.37	0.37	0.37	0.37	0.37
	TOTAL "P" DIMEN.	6.652	6.652	6.652	6.652	6.652	6.652	6.652	6.652	6.652	6.652	6.652	6.652
	SEAT ELEVATION	5367.63	5367.73	5367.84	5367.94	5368.05	5368.15	5368.18	5367.96	5367.74	5367.53	5367.31	5367.10

LOCATION		GIRDER 1	2	3	4	5	6	7	8	9	10	11	12
PIER NO. 2 SPAN NO. 3	DECK ELEV.	5374.26	5374.36	5374.47	5374.57	5374.68	5374.78	5374.81	5374.59	5374.38	5374.16	5373.95	5373.73
	DECK THICKNESS	0.67	0.67	0.67	0.67	0.67	0.67	0.67	0.67	0.67	0.67	0.67	0.67
	HAUNCH	0.34	0.34	0.34	0.34	0.34	0.34	0.34	0.34	0.34	0.34	0.34	0.34
	GIRDER	5.25	5.25	5.25	5.25	5.25	5.25	5.25	5.25	5.25	5.25	5.25	5.25
	BEARING PAD *	0.37	0.37	0.37	0.37	0.37	0.37	0.37	0.37	0.37	0.37	0.37	0.37
	TOTAL "P" DIMEN.	6.631	6.631	6.631	6.631	6.631	6.631	6.631	6.631	6.631	6.631	6.631	6.631
	SEAT ELEVATION	5367.63	5367.73	5367.84	5367.94	5368.05	5368.15	5368.18	5367.96	5367.74	5367.53	5367.31	5367.10

LOCATION		GIRDER 1	2	3	4	5	6	7	8	9	10	11	12
ABUT. NO. 2 SPAN NO. 3	DECK ELEV.	5373.76	5373.86	5373.97	5374.07	5374.18	5374.28	5374.30	5374.09	5373.87	5373.66	5373.44	5373.23
	DECK THICKNESS	0.67	0.67	0.67	0.67	0.67	0.67	0.67	0.67	0.67	0.67	0.67	0.67
	HAUNCH	0.34	0.34	0.34	0.34	0.34	0.34	0.34	0.34	0.34	0.34	0.34	0.34
	GIRDER	5.25	5.25	5.25	5.25	5.25	5.25	5.25	5.25	5.25	5.25	5.25	5.25
	BEARING PAD *	0.11	0.11	0.11	0.11	0.11	0.11	0.11	0.11	0.11	0.11	0.11	0.11
	TOTAL "P" DIMEN.	6.368	6.368	6.368	6.368	6.368	6.368	6.368	6.368	6.368	6.368	6.368	6.368
	SEAT ELEVATION	5367.39	5367.49	5367.60	5367.70	5367.81	5367.91	5367.94	5367.72	5367.51	5367.29	5367.07	5366.86

* BEARING PAD HEIGHT INCLUDES TOTAL HEIGHT OF BEARING PAD + SOLE PLATE

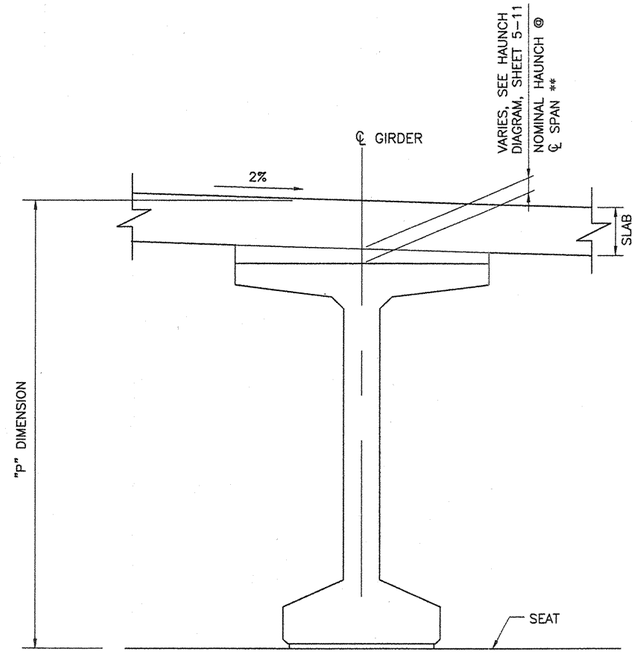

** NOMINAL HAUNCH = 0.340 SPAN 1
= 0.202 SPAN 2
= 0.299 SPAN 3

AS-BUILT INFORMATION
CONTRACTOR David Montoya Const. Inc. DATE
STAKED BY Billingsley Engr. DATE
INSPECTOR'S ACCEPTANCE BY COA DATE
FIELD VERIFICATION BY COA/WCL DATE
DRAWINGS CORRECTED BY WCL DATE 3/03
MICRO-FILM INFORMATION
RECORDED BY DATE
NO.

BENCH MARKS
THE STA. IS A USGS TABLET STAMPED 'BLACK-2 1977' SET FLUSH W/ THE GROUND. THE STA. IS LOCATED 8.5 MI. N.W. OF DOWNTOWN ALBUQ. TO REACH THE STA. FROM THE INTX OF COORS/I-40 GO N. ON COORS 5.8 MI. TO PARADISE BLVD. TURN LEFT GO W. ON PARADISE BLVD. 1.1 MI. TO GOLF COURSE RD. TURN RIGHT GO N. ON GOLF COURSE RD. 1.3 MI. TO McMAHON BLVD. THE STA. IS ON THE LEFT.
ELEVATION = 5213.926 FT. (2ND ORDER) (NGVD29)

SURVEY INFORMATION
FIELD NOTES
NO. | BY | DATE

ENGINEER'S SEAL
GARY W. KINCHEN NEW MEXICO 14368 REGISTERED PROFESSIONAL ENGINEER
OCTOBER 28, 2005

NO.	DATE	REMARKS	BY
		REVISIONS	

WILSON & COMPANY, ENGINEERS & ARCHITECTS
DESIGNED BY GWK DATE OCT 2005
DRAWN BY CRH DATE OCT 2005
CHECKED BY SFP DATE OCT 2005

CITY OF ALBUQUERQUE
DEPARTMENT OF MUNICIPAL DEVELOPMENT
TRANSPORTATION DIVISION

McMAHON BLVD. EXTENSION – LAS CALABACILLAS BRIDGE
SEAT ELEVATIONS

Design Review Committee: APPROVED NOV 7 2005 DESIGN REVIEW COMMITTEE
City Engineer Approval: APPROVED NOV 7 2005 CITY ENGINEER
Last Design Update | Mo./Day/Yr. | Mo./Day/Yr.

City Project No. COA 681602 | Zone Map No. A-10-Z | Sheet 5-10 Of

WILSON & COMPANY

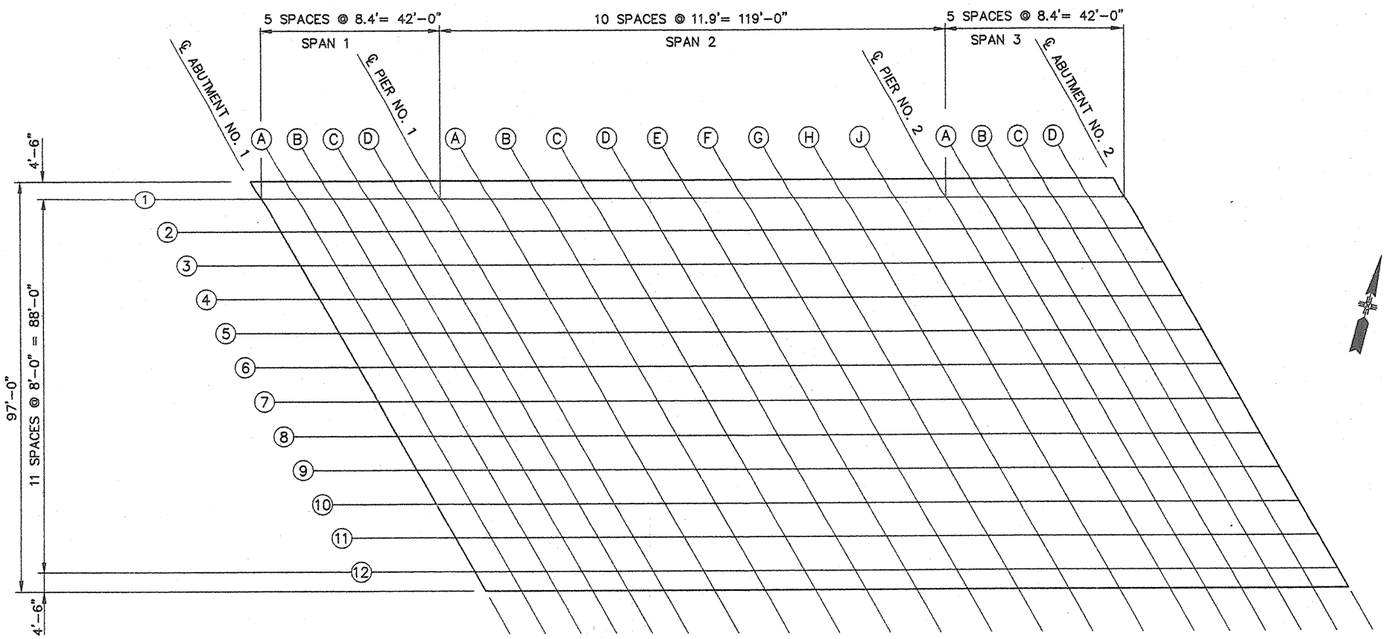

TOP OF DECK ELEVATIONS

SCALE: 1:200

	℄ BRG	SPAN 1				℄ BRG	SPAN 2								
	ABUT 1	A	B	C	D	PIER 1	A	B	C	D	E	F	G	H	J
Left Edge	5376.19	5376.09	5375.99	5375.89	5375.78	5375.68	5375.54	5375.39	5375.25	5375.10	5374.96	5374.81	5374.67	5374.52	5374.37
Girder 1	5376.23	5376.13	5376.03	5375.93	5375.82	5375.72	5375.58	5375.43	5375.28	5375.14	5374.99	5374.85	5374.70	5374.56	5374.41
Girder 2	5376.34	5376.24	5376.13	5376.03	5375.93	5375.83	5375.68	5375.53	5375.39	5375.24	5375.10	5374.95	5374.81	5374.66	5374.52
Girder 3	5376.44	5376.34	5376.24	5376.13	5376.03	5375.93	5375.78	5375.64	5375.49	5375.35	5375.20	5375.06	5374.91	5374.77	5374.62
Girder 4	5376.55	5376.44	5376.34	5376.24	5376.14	5376.03	5375.89	5375.74	5375.60	5375.45	5375.31	5375.16	5375.02	5374.87	5374.73
Girder 5	5376.65	5376.55	5376.45	5376.34	5376.24	5376.14	5375.99	5375.85	5375.70	5375.56	5375.41	5375.27	5375.12	5374.98	5374.83
Girder 6	5376.76	5376.65	5376.55	5376.45	5376.35	5376.24	5376.10	5375.95	5375.81	5375.66	5375.52	5375.37	5375.23	5375.08	5374.94
℄ Bridge	5376.83	5376.73	5376.63	5376.53	5376.42	5376.32	5376.18	5376.03	5375.89	5375.74	5375.60	5375.45	5375.31	5375.16	5375.02
Girder 7	5376.78	5376.68	5376.58	5376.47	5376.37	5376.27	5376.12	5375.98	5375.83	5375.69	5375.54	5375.40	5375.25	5375.11	5374.96
Girder 8	5376.57	5376.46	5376.36	5376.26	5376.16	5376.05	5375.91	5375.76	5375.62	5375.47	5375.33	5375.18	5375.04	5374.89	5374.75
Girder 9	5376.35	5376.25	5376.15	5376.04	5375.94	5375.84	5375.69	5375.55	5375.40	5375.26	5375.11	5374.97	5374.82	5374.68	5374.53
Girder 10	5376.14	5376.03	5375.93	5375.83	5375.73	5375.62	5375.48	5375.33	5375.19	5375.04	5374.90	5374.75	5374.61	5374.46	5374.32
Girder 11	5375.92	5375.82	5375.71	5375.61	5375.51	5375.41	5375.26	5375.12	5374.97	5374.83	5374.68	5374.54	5374.39	5374.25	5374.10
Girder 12	5375.70	5375.60	5375.50	5375.40	5375.29	5375.19	5375.05	5374.90	5374.76	5374.61	5374.47	5374.32	5374.18	5374.03	5373.89
Right Edge	5375.62	5375.52	5375.42	5375.32	5375.21	5375.11	5374.97	5374.82	5374.68	5374.53	5374.39	5374.24	5374.10	5373.95	5373.80

	℄ BRG	SPAN 3				℄ BRG
	PIER 2	A	B	C	D	ABUT 1
Left Edge	5374.23	5374.13	5374.02	5373.92	5373.82	5373.72
Girder 1	5374.27	5374.17	5374.06	5373.96	5373.86	5373.76
Girder 2	5374.37	5374.27	5374.17	5374.07	5373.96	5373.86
Girder 3	5374.48	5374.38	5374.27	5374.17	5374.07	5373.97
Girder 4	5374.58	5374.48	5374.38	5374.28	5374.17	5374.07
Girder 5	5374.69	5374.58	5374.48	5374.38	5374.28	5374.18
Girder 6	5374.79	5374.69	5374.59	5374.48	5374.38	5374.28
℄ Bridge	5374.87	5374.77	5374.67	5374.56	5374.46	5374.36
Girder 7	5374.82	5374.71	5374.61	5374.51	5374.41	5374.30
Girder 8	5374.60	5374.50	5374.40	5374.29	5374.19	5374.09
Girder 9	5374.39	5374.28	5374.18	5374.08	5373.98	5373.87
Girder 10	5374.17	5374.07	5373.97	5373.86	5373.76	5373.66
Girder 11	5373.96	5373.85	5373.75	5373.65	5373.55	5373.44
Girder 12	5373.74	5373.64	5373.54	5373.43	5373.33	5373.23
Right Edge	5373.66	5373.56	5373.45	5373.35	5373.25	5373.15

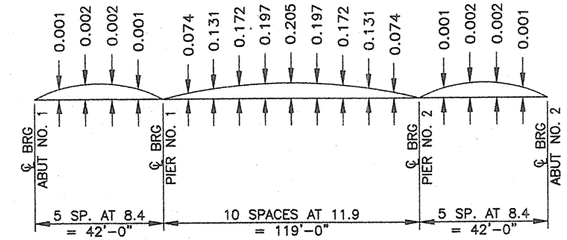

DEAD LOAD DEFLECTION DIAGRAM

NO SCALE

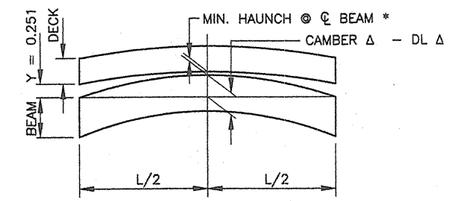

TYPICAL HAUNCH DIAGRAM @ ℄ BEAM

NO SCALE

NOTE:
THE HAUNCH DIMENSION "Y" IS BASED UPON COMPUTED CAMBER AND DEAD LOAD DEFLECTION AT CENTERLINE OF THE BEAM @ ERECTION BASED ON CAMBER GROWTH TO 90 DAYS. IF THE ACTUAL CAMBER DIFFERS FROM THE COMPUTED BEAM CAMBER ADJUST THE DIMENSIONS ACCORDINGLY.

Y = 0.207 + CAMBER – D.L.

* MIN. HAUNCH @ ℄ BEAM VARIES. SEE SHEET 5-10.

NOTES:

1. TO COMPENSATE FOR DEAD LOAD DEFLECTION DUE TO WEIGHT OF SLAB AND SUPERIMPOSED DEAD LOADS, SET SCREEDS ABOVE DECK ELEVATIONS BY DIMENSION SHOWN IN DEAD LOAD DEFLECTION DIAGRAM.
2. DECK ELEVATIONS SHOWN ARE AT 10TH POINTS ALONG SPAN.
3. ALL ELEVATIONS AND DEFLECTIONS ON THIS SHEET ARE IN FEET.

AS-BUILT INFORMATION
CONTRACTOR David Montoya Const. Inc.
WORK STAKED BY Billingsley Engr. DATE
INSPECTORS ACCEPTANCE BY COA DATE
FIELD VERIFICATION BY COA/WCI DATE 9/07
DRAWINGS CORRECTED BY WCI
MICRO-FILM INFORMATION
RECORDED BY DATE
NO.

BENCH MARKS
THE STA. IS A USGS TABLET STAMPED "BLACK-2 1977" SET FLUSH W/ THE GROUND. THE STA. IS LOCATED 8.5 MI. N.W. OF DOWNTOWN ALBUQ. TO REACH THE STA. FROM THE INTX OF COORS/I-40 GO N. ON COORS 5.8 MI. TO PARADISE BLVD. TURN LEFT GO W. ON PARADISE BLVD. 1.1 MI. TO GOLF COURSE RD. TURN RIGHT GO N. ON GOLF COURSE RD. 1.3 MI. TO McMAHON BLVD. THE STA. IS ON THE LEFT.
ELEVATION = 5213.926 FT. (2ND ORDER) (NGVD29)

SURVEY INFORMATION
FIELD NOTES
NO. BY DATE

ENGINEER'S SEAL
GARY W. KINCHEY NEW MEXICO 14366 PROFESSIONAL ENGINEER
OCTOBER 28, 2005

REVISIONS
NO. DATE REMARKS BY

WILSON & COMPANY, ENGINEERS & ARCHITECTS
DESIGNED BY GWK DATE OCT 2005
DRAWN BY CRH DATE OCT 2005
CHECKED BY SFP DATE OCT 2005

CITY OF ALBUQUERQUE
DEPARTMENT OF MUNICIPAL DEVELOPMENT
TRANSPORTATION DIVISION

McMAHON BLVD. EXTENSION – LAS CALABACILLAS BRIDGE
DECK ELEVATIONS

Design Review Committee: APPROVED DESIGN REVIEW COMMITTEE
City Engineer Approval: APPROVED CITY ENGINEER
Last Design Update Mo./Day/Yr. Mo./Day/Yr.

City Project No. COA 681602 | Zone Map No. A-10-Z | Sheet 5-11 Of

WILSON & COMPANY

McMAHON BLVD. EXTENSION - LAS CALABACILLAS BRIDGE
AS-BUILT VERIFICATION
FINISH DECK GRADES WITHOUT DEADLOAD

		GIRDER 1						GIRDER 3						GIRDER 5						CL BRIDGE					
		AS STAKED	AS BUILT	DIFFERENCE	AS STAKED	AS BUILT	DIFFERENCE	AS STAKED	AS BUILT	DIFFERENCE	AS STAKED	AS BUILT	DIFFERENCE	AS STAKED	AS BUILT	DIFFERENCE	AS STAKED	AS BUILT	DIFFERENCE	COMPUTED	AS BUILT	DIFFERENCE	COMPUTED	AS BUILT	DIFFERENCE	
ABUT 2	CL	5373.719	5373.726	0.006	5373.759	5373.752	-0.007	5373.869	5373.805	-0.064	5373.969	5373.892	-0.077	5374.079	5373.984	-0.095	5374.179	5374.118	-0.061	5374.622	5374.533	-0.089	5374.694	5374.640	-0.054	CL
SPAN 3	D	5373.922	5373.825	0.003	5373.862	5373.872	0.010	5373.972	5373.927	-0.045	5374.072	5373.998	-0.074	5374.182	5374.090	-0.092	5374.282	5374.220	-0.062	5374.725	5374.655	-0.070	5374.795	5374.738	-0.058	D
SPAN 3	C	5373.924	5373.923	-0.001	5373.964	5373.972	0.008	5374.074	5374.048	-0.026	5374.174	5374.118	-0.056	5374.284	5374.197	-0.087	5374.384	5374.324	-0.060	5374.827	5374.736	-0.091	5374.898	5374.836	-0.062	C
SPAN 3	B	5374.026	5374.016	-0.010	5374.066	5374.080	0.014	5374.176	5374.165	-0.011	5374.276	5374.235	-0.041	5374.386	5374.306	-0.080	5374.488	5374.430	-0.058	5374.929	5374.837	-0.092	5375.000	5374.937	-0.063	B
SPAN 3	A	5374.129	5374.106	-0.022	5374.168	5374.179	0.011	5374.278	5374.280	0.002	5374.378	5374.347	-0.031	5374.488	5374.417	-0.071	5374.588	5374.535	-0.053	5375.031	5374.917	-0.114	5375.101	5375.042	-0.059	A
PIER 2	CL	5374.231	5374.209	-0.022	5374.271	5374.274	0.003	5374.381	5374.394	0.013	5374.481	5374.462	-0.019	5374.591	5374.529	-0.062	5374.691	5374.647	-0.044	5375.134	5374.997	-0.137	5375.204	5375.147	-0.057	CL
SPAN 2	J	5374.375	5374.374	-0.001	5374.415	5374.438	0.023	5374.525	5374.551	0.026	5374.625	5374.623	-0.002	5374.735	5374.690	-0.045	5374.835	5374.813	-0.022	5375.278	5375.157	-0.121	5375.348	5375.292	-0.056	J
SPAN 2	H	5374.520	5374.495	-0.025	5374.560	5374.571	0.011	5374.670	5374.708	0.038	5374.770	5374.781	0.011	5374.880	5374.852	-0.028	5374.980	5374.976	-0.004	5375.423	5375.329	-0.094	5375.493	5375.438	-0.055	H
SPAN 2	G	5374.665	5374.610	-0.055	5374.705	5374.691	-0.014	5374.815	5374.842	0.027	5374.915	5374.925	0.010	5375.025	5374.996	-0.029	5375.125	5375.119	-0.006	5375.588	5375.474	-0.094	5375.638	5375.584	-0.054	G
SPAN 2	F	5374.810	5374.768	-0.042	5374.850	5374.844	-0.006	5374.960	5374.978	0.018	5375.060	5375.061	0.001	5375.170	5375.140	-0.030	5375.270	5375.263	-0.007	5375.713	5375.619	-0.094	5375.783	5375.728	-0.055	F
SPAN 2	E	5374.955	5374.917	-0.038	5374.995	5374.991	-0.004	5375.105	5375.121	0.016	5375.205	5375.215	0.010	5375.315	5375.294	-0.021	5375.415	5375.414	-0.001	5375.858	5375.768	-0.090	5375.928	5375.876	-0.052	E
SPAN 2	D	5375.100	5375.057	-0.043	5375.140	5375.130	-0.010	5375.250	5375.262	0.012	5375.350	5375.359	0.008	5375.460	5375.449	-0.011	5375.560	5375.568	0.008	5376.003	5375.918	-0.085	5376.073	5376.024	-0.049	D
SPAN 2	C	5375.244	5375.210	-0.034	5375.284	5375.260	-0.024	5375.394	5375.382	-0.012	5375.494	5375.476	-0.018	5375.604	5375.589	-0.035	5375.704	5375.694	-0.010	5376.147	5376.059	-0.088	5376.217	5376.198	-0.019	C
SPAN 2	B	5375.389	5375.362	-0.027	5375.429	5375.412	-0.017	5375.539	5375.505	-0.034	5375.629	5375.586	-0.043	5375.749	5375.688	-0.061	5375.849	5375.812	-0.037	5376.292	5376.188	-0.104	5376.362	5376.365	0.003	B
SPAN 2	A	5375.534	5375.511	-0.023	5375.574	5375.562	-0.012	5375.684	5375.658	-0.026	5375.784	5375.731	-0.053	5375.894	5375.822	-0.072	5375.994	5375.925	-0.069	5376.437	5376.313	-0.124	5376.507	5376.496	-0.011	A
PIER 1	CL	5375.679	5375.651	-0.028	5375.719	5375.706	-0.013	5375.829	5375.807	-0.022	5375.929	5375.882	-0.047	5376.039	5375.957	-0.082	5376.139	5376.059	-0.080	5376.582	5376.435	-0.147	5376.652	5376.617	-0.035	CL
SPAN 1	D	5375.781	5375.747	-0.034	5375.821	5375.808	-0.013	5375.931	5375.911	-0.020	5376.031	5375.953	-0.043	5376.141	5376.062	-0.079	5376.241	5376.152	-0.089	5376.664	5376.530	-0.134	5376.754	5376.698	-0.056	D
SPAN 1	C	5375.883	5375.844	-0.039	5375.925	5375.907	-0.018	5376.033	5376.015	-0.018	5376.133	5376.092	-0.041	5376.243	5376.167	-0.076	5376.343	5376.254	-0.089	5376.765	5376.628	-0.138	5376.855	5376.779	-0.077	C
SPAN 1	B	5375.986	5375.938	-0.048	5376.028	5376.000	-0.028	5376.136	5376.110	-0.026	5376.236	5376.193	-0.043	5376.348	5376.273	-0.075	5376.445	5376.360	-0.085	5376.869	5376.716	-0.153	5376.959	5376.872	-0.087	B
SPAN 1	A	5376.088	5376.040	-0.048	5376.128	5376.082	-0.046	5376.238	5376.190	-0.048	5376.338	5376.273	-0.065	5376.448	5376.356	-0.092	5376.548	5376.464	-0.084	5376.991	5376.821	-0.170	5377.061	5376.971	-0.090	A
ABUT 1	CL	5376.190	5376.146	-0.044	5376.230	5376.188	-0.042	5376.340	5376.269	-0.071	5376.440	5376.353	-0.087	5376.550	5376.436	-0.114	5376.650	5376.552	-0.098	5377.093	5376.913	-0.180	5377.163	5377.070	-0.093	CL

NOTES:

1. POSITIVE NUMBERS INDICATE AS-BUILT SURFACE CONSTRUCTED ABOVE AS-STAKED (DESIGN) SURFACE
2. NEGATIVE NUMBERS INDICATE AS-BUILT SURFACE CONSTRUCTED BELOW AS-STAKED (DESIGN) SURFACE
3. GIRDERS #9 AND #7 AND CL BRIDGE OCCUR BELOW THE RAISED MEDIAN. THE AS-BUILT ELEVATION WAS COMPARED TO A COMPUTED ELEVATION AT 4" (0.333') ABOVE THE AS-STAKED ELEVATION OF DECK AT THESE LOCATIONS.
4. THE CONTROL POINT (#20) USED TO STAKE BRIDGE SEAT ELEVATIONS AND PROFILE BEAMS HAS BEEN OBLITERATED. THIS POINT WAS ESTABLISHED FROM THE CONTROL POINT NETWORK PROVIDED BY WILSON & CO.
5. WILSON & CO. CONTROL POINT #5001 WAS OCCUPIED FOR THE AS-BUILT VERIFICATION SURVEY. THIS POINT IS QUITE A DISTANT FARTHER FROM THE BRIDGE THAN # 20. THIS MAY ACCOUNT FOR SOME OF THE DIFFERENCES DIFFERENCES BETWEEN AS-STAKED AND AS-BUILT ELEVATIONS.
6. THE AS-BUILT VERIFICATION SURVEY WAS PERFORMED ON JANUARY 17, 2007.

ROD A. BILLINGSLEY NEW MEXICO 10834 PROFESSIONAL SURVEYOR
1-25-07

McMAHON BLVD. EXTENSION - LAS CALABACILLAS BRIDGE
AS-BUILT VERIFICATION
FINISH DECK GRADES WITHOUT DEADLOAD

		CL BRIDGE			GIRDER 8			GIRDER 10			GIRDER 12														
		COMPUTED	AS BUILT	DIFFERENCE	COMPUTED	AS BUILT	DIFFERENCE	AS STAKED	AS BUILT	DIFFERENCE	AS STAKED	AS BUILT	DIFFERENCE	AS STAKED	AS BUILT	DIFFERENCE	AS STAKED	AS BUILT	DIFFERENCE	AS STAKED	AS BUILT	DIFFERENCE	AS STAKED	AS BUILT	DIFFERENCE	
ABUT 2	CL	5374.694	5374.640	-0.054	5374.642	5374.574	-0.068	5374.099	5374.025	-0.074	5373.879	5373.818	-0.061	5373.669	5373.606	-0.063	5373.449	5373.390	-0.059	5373.229	5373.154	-0.075	5373.149	5373.056	-0.093	CL
SPAN 3	D	5374.795	5374.738	-0.058	5374.745	5374.676	-0.067	5374.202	5374.145	-0.057	5373.982	5373.933	-0.049	5373.772	5373.718	-0.054	5373.552	5373.500	-0.052	5373.332	5373.301	-0.031	5373.252	5373.150	-0.102	D
SPAN 3	C	5374.898	5374.836	-0.062	5374.847	5374.776	-0.071	5374.304	5374.265	-0.039	5374.084	5374.050	-0.034	5373.874	5373.833	-0.041	5373.654	5373.611	-0.043	5373.434	5373.411	-0.023	5373.354	5373.245	-0.109	C
SPAN 3	B	5375.000	5374.937	-0.063	5374.949	5374.877	-0.072	5374.406	5374.374	-0.032	5374.186	5374.155	-0.031	5373.976	5373.935	-0.041	5373.755	5373.712	-0.044	5373.536	5373.516	-0.020	5373.456	5373.365	-0.091	B
SPAN 3	A	5375.101	5375.042	-0.059	5375.051	5374.983	-0.068	5374.508	5374.474	-0.034	5374.288	5374.247	-0.041	5374.078	5374.028	-0.050	5373.858	5373.808	-0.050	5373.638	5373.617	-0.021	5373.558	5373.495	-0.063	A
PIER 2	CL	5375.204	5375.147	-0.057	5375.154	5375.089	-0.065	5374.611	5374.574	-0.037	5374.391	5374.348	-0.043	5374.181	5374.124	-0.057	5373.961	5373.902	-0.059	5373.741	5373.712	-0.029	5373.681	5373.618	-0.043	CL
SPAN 2	J	5375.348	5375.292	-0.056	5375.298	5375.239	-0.059	5374.755	5374.729	-0.026	5374.535	5374.502	-0.033	5374.325	5374.287	-0.039	5374.105	5374.072	-0.033	5373.885	5373.851	-0.034	5373.805	5373.741	-0.064	J
SPAN 2	H	5375.493	5375.438	-0.055	5375.443	5375.385	-0.058	5374.900	5374.886	-0.014	5374.680	5374.659	-0.021	5374.470	5374.443	-0.027	5374.250	5374.228	-0.014	5374.030	5374.022	-0.008	5373.950	5373.865	-0.085	H
SPAN 2	G	5375.638	5375.584	-0.054	5375.588	5375.530	-0.058	5375.045	5375.038	-0.007	5374.825	5374.809	-0.016	5374.615	5374.596	-0.019	5374.395	5374.390	-0.005	5374.175	5374.168	-0.007	5374.095	5374.005	-0.089	G
SPAN 2	F	5375.783	5375.728	-0.055	5375.733	5375.675	-0.058	5375.190	5375.190	0.000	5374.970	5374.950	-0.010	5374.760	5374.746	-0.014	5374.540	5374.542	0.002	5374.320	5374.322	0.002	5374.240	5374.154	-0.086	F
SPAN 2	E	5375.928	5375.876	-0.052	5375.878	5375.827	-0.051	5375.335	5375.339	0.004	5375.115	5375.103	-0.012	5374.905	5374.892	-0.013	5374.685	5374.692	0.007	5374.465	5374.478	0.013	5374.385	5374.327	-0.058	E
SPAN 2	D	5376.073	5376.024	-0.049	5376.023	5375.976	-0.047	5375.480	5375.489	0.009	5375.260	5375.249	-0.011	5375.050	5375.033	-0.017	5374.830	5374.837	0.007	5374.610	5374.627	0.017	5374.530	5374.497	-0.033	D
SPAN 2	C	5376.217	5376.198	-0.019	5376.167	5376.125	-0.042	5375.624	5375.616	-0.008	5375.404	5375.384	-0.020	5375.194	5375.167	-0.027	5374.974	5374.969	-0.005	5374.754	5374.766	0.012	5374.674	5374.643	-0.031	C
SPAN 2	B	5376.362	5376.365	0.003	5376.312	5376.290	-0.022	5375.769	5375.729	-0.040	5375.549	5375.513	-0.035	5375.339	5375.302	-0.037	5375.119	5375.102	-0.017	5374.899	5374.902	0.003	5374.819	5374.788	-0.031	B
SPAN 2	A	5376.507	5376.496	-0.011	5376.457	5376.424	-0.033	5375.914	5375.875	-0.039	5375.694	5375.650	-0.044	5375.484	5375.436	-0.048	5375.264	5375.232	-0.032	5375.044	5375.040	-0.004	5374.964	5374.936	-0.028	A
PIER 1	CL	5376.652	5376.617	-0.035	5376.602	5376.553	-0.049	5376.059	5376.013	-0.046	5375.839	5375.787	-0.052	5375.629	5375.575	-0.054	5375.409	5375.370	-0.039	5375.189	5375.178	-0.011	5375.109	5375.077	-0.032	CL
SPAN 1	D	5376.754	5376.698	-0.056	5376.704	5376.634	-0.070	5376.181	5376.112	-0.049	5375.941	5375.887	-0.054	5375.731	5375.676	-0.055	5375.511	5375.471	-0.040	5375.291	5375.279	-0.012	5375.211	5375.177	-0.034	D
SPAN 1	C	5376.855	5376.779	-0.077	5376.805	5376.717	-0.088	5376.283	5376.210	-0.073	5376.043	5375.989	-0.054	5375.833	5375.777	-0.056	5375.613	5375.572	-0.041	5375.393	5375.379	-0.014	5375.313	5375.276	-0.037	C
SPAN 1	B	5376.959	5376.872	-0.087	5376.909	5376.812	-0.097	5376.385	5376.305	-0.081	5376.146	5376.084	-0.062	5375.936	5375.856	-0.080	5375.716	5375.645	-0.071	5375.496	5375.472	-0.024	5375.416	5375.375	-0.041	B
SPAN 1	A	5377.061	5376.971	-0.090	5377.011	5376.910	-0.101	5376.488	5376.395	-0.093	5376.248	5376.158	-0.090	5376.038	5375.929	-0.109	5375.818	5375.714	-0.104	5375.599	5375.552	-0.046	5375.518	5375.462	-0.056	A
ABUT 1	CL	5377.163	5377.070	-0.093	5377.113	5377.006	-0.107	5376.570	5376.481	-0.089	5376.350	5376.232	-0.118	5376.140	5376.002	-0.138	5375.920	5375.785	-0.135	5375.700	5375.621	-0.079	5375.620	5375.550	-0.070	CL

NOTES:

1. POSITIVE NUMBERS INDICATE AS-BUILT SURFACE CONSTRUCTED ABOVE AS-STAKED (DESIGN) SURFACE
2. NEGATIVE NUMBERS INDICATE AS-BUILT SURFACE CONSTRUCTED BELOW AS-STAKED (DESIGN) SURFACE
3. GIRDERS #9 AND #7 AND CL BRIDGE OCCUR BELOW THE RAISED MEDIAN. THE AS-BUILT ELEVATION WAS COMPARED TO A COMPUTED ELEVATION AT 4" (0.333') ABOVE THE AS-STAKED ELEVATION OF DECK AT THESE LOCATIONS.
4. THE CONTROL POINT (#20) USED TO STAKE BRIDGE SEAT ELEVATIONS AND PROFILE BEAMS HAS BEEN OBLITERATED. THIS POINT WAS ESTABLISHED FROM THE CONTROL POINT NETWORK PROVIDED BY WILSON & CO.
5. WILSON & CO. CONTROL POINT #5001 WAS OCCUPIED FOR THE AS-BUILT VERIFICATION SURVEY. THIS POINT IS QUITE A DISTANT FARTHER FROM THE BRIDGE THAN # 20. THIS MAY ACCOUNT FOR SOME OF THE DIFFERENCES DIFFERENCES BETWEEN AS-STAKED AND AS-BUILT ELEVATIONS.
6. THE AS-BUILT VERIFICATION SURVEY WAS PERFORMED ON JANUARY 17, 2007.

ROD A. BILLINGSLEY NEW MEXICO 10834 PROFESSIONAL SURVEYOR
1-25-07

AS-BUILT INFORMATION

CONTRACTOR David Martinez Const. Inc. DATE
WORK STAKED BY Billingsley Engr. DATE
WORK INSPECTED & ACCEPTANCE BY COA DATE
FIELD VERIFICATION BY COA/WCL DATE
DRAWINGS CORRECTED BY WCL DATE 3/07
RECORDED BY MICRO-FILM INFORMATION DATE
NO. DATE

BENCH MARKS

THE STA. IS A USGS TABLET STAMPED 'BLACK-2 1977' SET FLUSH W/ THE GROUND. THE STA. IS LOCATED 8.5 MI. N.W. OF DOWNTOWN ALBUQ. TO REACH THE STA. FROM THE INTX OF COORS/I-40 GO N. ON COORS 5.8 MI. TO PARADISE BLVD. TURN LEFT GO W. ON PARADISE BLVD. 1.1 MI. TO GOLF COURSE RD. TURN RIGHT GO N. ON GOLF COURSE RD. 1.3 MI. TO McMAHON BLVD. THE STA. IS ON THE LEFT.
N 1530241.52, E 3729201.43
ELEVATION = 5213.926 FT. (2ND ORDER) (NGVD29)

SURVEY INFORMATION

FIELD NOTES

NO.	BY	DATE

ENGINEER'S SEAL

NO.	DATE	REMARKS	BY
		REVISIONS	

WILSON & COMPANY, ENGINEERS & ARCHITECTS
DESIGNED BY
DRAWN BY
CHECKED BY

CITY OF ALBUQUERQUE
DEPARTMENT OF MUNICIPAL DEVELOPMENT
TRANSPORTATION DIVISION

McMAHON BLVD. EXTENSION–CALABACILLAS BRIDGE

Design Review Committee	City Engineer Approval	Last Design Update	Mo./Day/Yr.	Mo./Day/Yr.

City Project No.	Zone Map No.	Sheet	Of
COA 681602	A–10–Z	5–11a	

WILSON & COMPANY

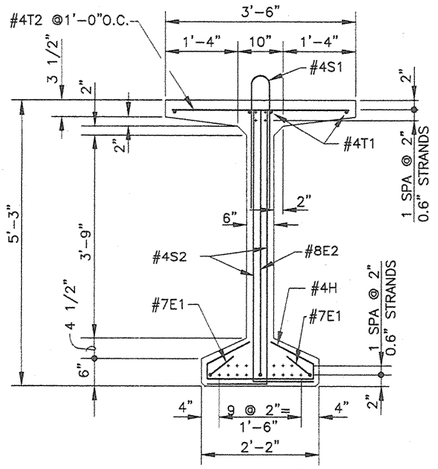

END VIEW

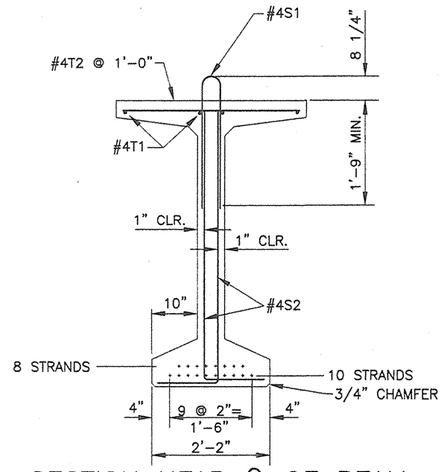

SECTION NEAR ℄ OF BEAM

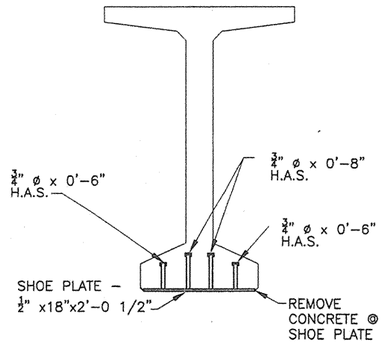

END VIEW

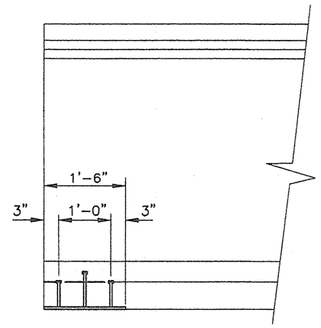

ELEVATION

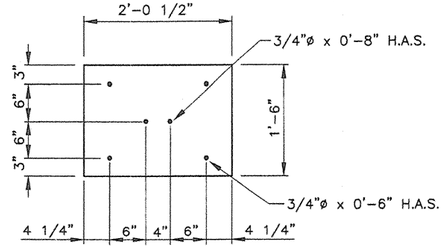

SHOE PLATE DETAIL

WEIGHT	CAMBER @ RELEASE	CAMBER @ ERECTION	DEAD LOAD DEFLECTION
15.7 TONS	0.31 IN.	0.55 IN.	0.06 IN.

BEAM DATA

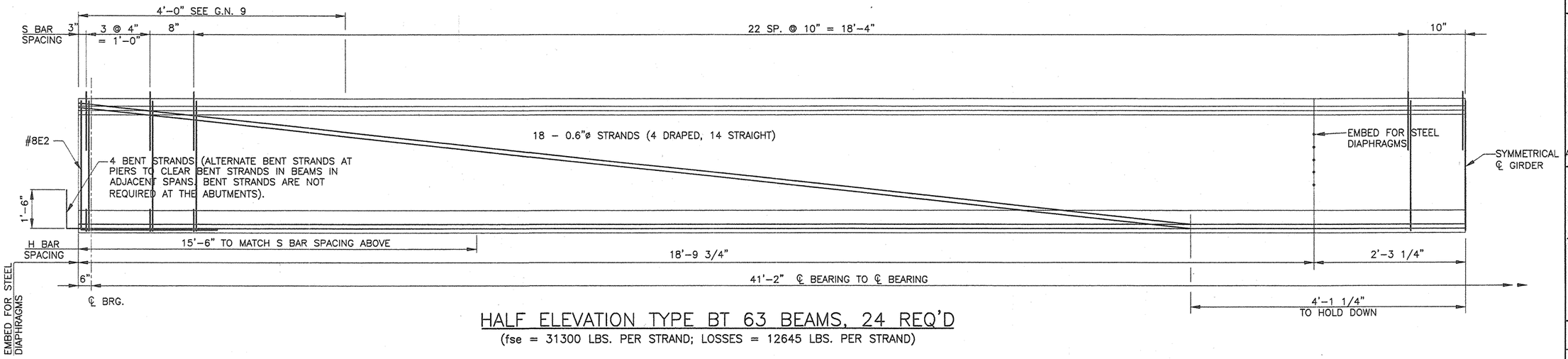

HALF ELEVATION TYPE BT 63 BEAMS, 24 REQ'D

(fse = 31300 LBS. PER STRAND; LOSSES = 12645 LBS. PER STRAND)

GENERAL NOTES

1. INCLUDE COST OF REINFORCING BARS AND STRUCTURAL STEEL EMBEDDED IN BRIDGE GIRDERS IN THE UNIT PRICE BID FOR PRESTRESSED CONCRETE BRIDGE MEMBER TYPE BT-63.
2. LIFT GIRDERS BY MEANS OF DEVICES SATISFACTORY TO THE PROJECT ENGINEER. USE ONLY LIFTING DEVICES THAT HAVE BEEN PRIOR APPROVED BY THE PROJECT ENGINEER. CAST, STORE, AND HAUL BEAMS IN UPRIGHT POSITION.
3. THOROUGHLY WIRE BRUSH AND SCORE TRANSVERSELY THE TOP SURFACE OF ALL GIRDERS AFTER INITIAL SET TO PROVIDE A ROUGH SURFACE (MIN. DEPTH = 1/4" ACROSS ENTIRE FLANGE WIDTH). REMOVE LAITANCE.
4. THE CAMBER AT ERECTION DIMENSION LISTED IS THE CALCULATED VALUE DUE TO THE PRESTRESSING EFFECT + GIRDER WEIGHT, WITH AN ALLOWANCE FOR CAMBER GROWTH TO 90 DAYS. LIMIT THE CAMBER GROWTH TO A VALUE NOT TO EXCEED THE PREDICTED CAMBER AT ERECTION DIMENSION BY 1 INCH AT THE TIME OF DECK SLAB PLACEMENT. LIMIT CAMBER GROWTH BY WEIGHTING, FABRICATION SCHEDULING OR OTHER APPROVED MEANS.
5. DEAD LOAD DEFLECTION IS THE COMPUTED DEFLECTION DUE TO WEIGHT OF SLAB, DIAPHRAGMS, AND SUPERIMPOSED DEAD LOAD.
6. THE DESIGN SHOWN IS BASED ON THE USE OF 0.6" DIAMETER LOW-RELAXATION STRANDS CONFORMING TO AASHTO M-203, GRADE 270. USE AN INITIAL PRESTRESSING FORCE OF 43,940 LBS/STRAND. SLIGHT PRESTRESSING UP TO 46,870 LBS./STRAND IS ALLOWED TO OFFSET SEATING LOSSES.

   IF STRAND CONFORMING TO AASHTO M-203, BUT WITH PROPERTIES OTHER THAN AS LISTED ABOVE ARE PROPOSED, SUBMIT REVISED DETAILS SHOWING NUMBER AND ARRANGEMENT OF ALTERNATE STRANDS FOR PROJECT ENGINEER'S APPROVAL.
7. TYPE III CEMENT MAY BE USED AT THE FABRICATOR'S OPTION.
8. STRAIGHTEN SHOE PLATES PRIOR TO CASTING INTO GIRDER.
9. USE EPOXY-COATED BARS FOR ALL REINFORCING BARS PROJECTING FROM THE TOP OF THE GIRDER AND ALL BARS LOCATED WITHIN FOUR FEET OF AN EXPANSION JOINT IN THE BRIDGE DECK. CLEARLY MARK GIRDER EXPANSION ENDS WITH AN "E".

DESIGN DATA:

DESIGN IS IN ACCORDANCE WITH THE 2002 AASHTO STANDARD SPECIFICATIONS FOR HIGHWAY BRIDGES (17TH EDITION).

GIRDERS:
f'ci = 5500 PSI (MIN. COMPRESSIVE STRENGTH AT INITIAL PRESTRESS)

f'c = 6500 PSI (MIN. COMPRESSIVE STRENGTH AT 28 DAYS)

PRESTRESSING STEEL: 0.6"-DIAMETER, SEVEN-WIRE, LOW-RELAXATION STRAND.
f's = 58,590 LBS/STRAND
f*y = 52,700 LBS/STRAND

COMPOSITE SLAB:
CONVENTIONAL REINFORCING BARS:
fy = 60,000 PSI
f'c = 4,000 PSI

ALLOWANCE FOR FUTURE WEARING SURFACE: 30 PSF

ALLOWANCE FOR STEEL DECK FORMS: 15 PSF

LIVE LOAD: HS25-44

BARS REQUIRED FOR ONE BEAM

MARK	TYPE	R	X	LENGTH	NO. REQ'D
#7E1	2	3 1/8"	5'-0"	5'-8"	4
#8E2	2	3 1/2"	4'-11"	9'-10"	2
#4H1	3	1 1/2"	---	4'-1 1/2"	40
#4S1	4	1 3/4"	2'-5 1/4"	5'- 1/2"	55
#4S2	2	1 1/2"	5'-0"	5'-11"	110
#4T1	1	---	---	41'-8"	2
#4T2	1	---	---	3'-3"	43

BAR BENDING DIAGRAM

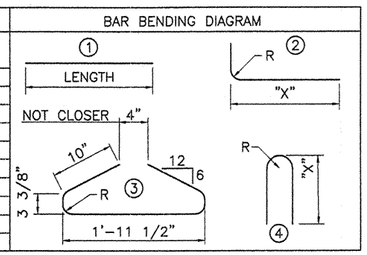

AS-BUILT INFORMATION
CONTRACTOR David Heritage Const. Inc DATE
STAKED BY Billingsley Eng. DATE
INSPECTOR'S ACCEPTANCE BY COA DATE
FIELD VERIFICATION BY COA/WCI DATE
DRAWINGS CORRECTED BY WCI DATE 3/07
MICRO-FILM INFORMATION
RECORDED BY DATE
NO.

BENCH MARKS
THE STA. IS A USGS TABLET STAMPED 'BLACK-2 1977' SET FLUSH W/ THE GROUND. THE STA. IS LOCATED 8.5 MI. N.W. OF DOWNTOWN ALBUQ. TO REACH THE STA. FROM THE INTX. OF COORS/I-40 GO N. ON COORS 5.8 MI. TO PARADISE BLVD. TURN LEFT GO W. ON PARADISE BLVD. 1.1 MI. TO GOLF COURSE RD. TURN RIGHT GO N. ON GOLF COURSE RD. 1.3 MI. TO McMAHON BLVD. THE STA. IS ON THE LEFT.
ELEVATION = 5213.926 FT. (2ND ORDER) (NGVD29)

SURVEY INFORMATION
FIELD NOTES
NO. BY DATE

ENGINEER'S SEAL
GARY W. KINCHEN NEW MEXICO 14366 PROFESSIONAL ENGINEER
OCTOBER 28, 2005

NO.	DATE	REMARKS	BY
		REVISIONS	

WILSON & COMPANY, ENGINEERS & ARCHITECTS
DESIGNED BY GWK DATE OCT 2005
DRAWN BY CRH DATE OCT 2005
CHECKED BY SFP DATE OCT 2005

CITY OF ALBUQUERQUE
DEPARTMENT OF MUNICIPAL DEVELOPMENT
TRANSPORTATION DIVISION

McMAHON BLVD. EXTENSION - LAS CALABACILLAS BRIDGE
PSC GIRDER TYPE BT-63, SPANS 1 & 3

Design Review Committee: APPROVED NOV 1 2005 DESIGN REVIEW COMMITTEE
City Engineer Approval: APPROVED NOV 1 2005 CITY ENGINEER
Last Design Update Mo./Day/Yr. Mo./Day/Yr.

City Project No. COA 681602 | Zone Map No. A-10-Z | Sheet 5-12 Of

WILSON & COMPANY

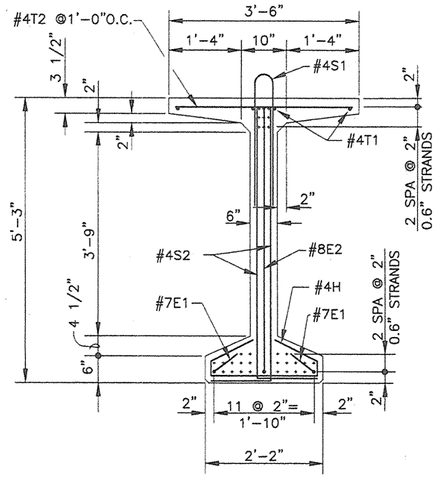

END VIEW

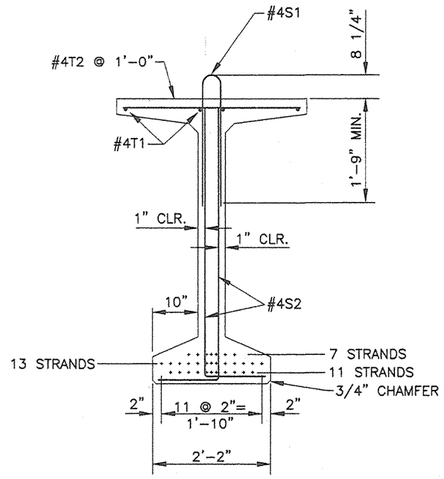

SECTION NEAR ℄ OF BEAM

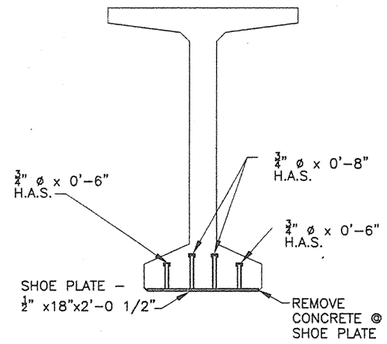

END VIEW

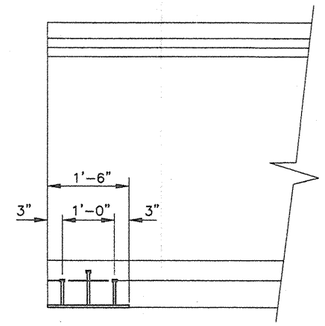

ELEVATION

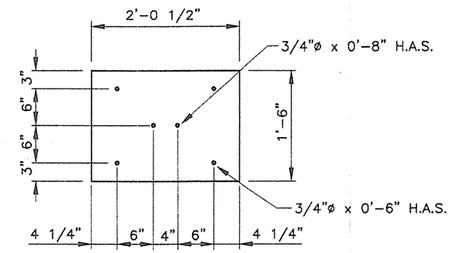

SHOE PLATE DETAIL

WEIGHT	CAMBER @ RELEASE	CAMBER @ ERECTION	DEAD LOAD DEFLECTION
43.9 TONS	2.49 IN.	4.39 IN.	6.12 IN.

BEAM DATA

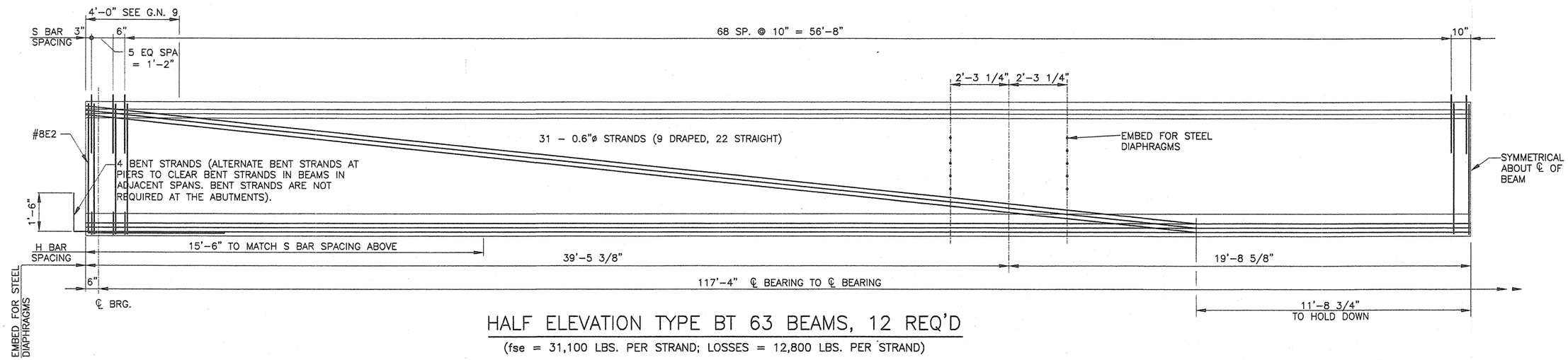

HALF ELEVATION TYPE BT 63 BEAMS, 12 REQ'D

(fse = 31,100 LBS. PER STRAND; LOSSES = 12,800 LBS. PER STRAND)

GENERAL NOTES

1. INCLUDE COST OF REINFORCING BARS AND STRUCTURAL STEEL EMBEDDED IN BRIDGE GIRDERS IN THE UNIT PRICE BID FOR PRESTRESSED CONCRETE BRIDGE MEMBER TYPE BT-63.
2. LIFT GIRDERS BY MEANS OF DEVICES SATISFACTORY TO THE PROJECT ENGINEER. USE ONLY LIFTING DEVICES THAT HAVE BEEN PRIOR APPROVED BY THE PROJECT ENGINEER. CAST, STORE, AND HAUL BEAMS IN UPRIGHT POSITION.
3. THOROUGHLY WIRE BRUSH AND SCORE TRANSVERSELY THE TOP SURFACE OF ALL GIRDERS AFTER INITIAL SET TO PROVIDE A ROUGH SURFACE (MIN. DEPTH = 1/4" ACROSS ENTIRE FLANGE WIDTH). REMOVE LAITANCE.
4. THE CAMBER AT ERECTION DIMENSION LISTED IS THE CALCULATED VALUE DUE TO THE PRESTRESSING EFFECT + GIRDER WEIGHT, WITH AN ALLOWANCE FOR CAMBER GROWTH TO 90 DAYS. LIMIT THE CAMBER GROWTH TO A VALUE NOT TO EXCEED THE PREDICTED CAMBER AT ERECTION DIMENSION BY 1 INCH AT THE TIME OF DECK SLAB PLACEMENT. LIMIT CAMBER GROWTH BY WEIGHTING, FABRICATION SCHEDULING OR OTHER APPROVED MEANS.
5. DEAD LOAD DEFLECTION IS THE COMPUTED DEFLECTION DUE TO WEIGHT OF SLAB, DIAPHRAGMS, AND SUPERIMPOSED DEAD LOAD.
6. THE DESIGN SHOWN IS BASED ON THE USE OF 0.6" DIAMETER LOW-RELAXATION STRANDS CONFORMING TO AASHTO M-203, GRADE 270. USE AN INITIAL PRESTRESSING FORCE OF 43,940 LBS/STRAND. SLIGHT PRESTRESSING UP TO 46,870 LBS./STRAND IS ALLOWED TO OFFSET SEATING LOSSES.

   IF STRAND CONFORMING TO AASHTO M-203, BUT WITH PROPERTIES OTHER THAN AS LISTED ABOVE ARE PROPOSED, SUBMIT REVISED DETAILS SHOWING NUMBER AND ARRANGEMENT OF ALTERNATE STRANDS FOR PROJECT ENGINEER'S APPROVAL.
7. TYPE III CEMENT MAY BE USED AT THE FABRICATOR'S OPTION.
8. STRAIGHTEN SHOE PLATES PRIOR TO CASTING INTO GIRDER.
9. USE EPOXY-COATED BARS FOR ALL REINFORCING BARS PROJECTING FROM THE TOP OF THE GIRDER AND ALL BARS LOCATED WITHIN FOUR FEET OF AN EXPANSION JOINT IN THE BRIDGE DECK. CLEARLY MARK GIRDER EXPANSION ENDS WITH AN "E".

DESIGN DATA:

DESIGN IS IN ACCORDANCE WITH THE 2002 AASHTO STANDARD SPECIFICATIONS FOR HIGHWAY BRIDGES (17TH EDITION).

GIRDERS:
f'ci = 5500 PSI (MIN. COMPRESSIVE STRENGTH AT INITIAL PRESTRESS)

f'c = 6500 PSI (MIN. COMPRESSIVE STRENGTH AT 28 DAYS)

PRESTRESSING STEEL: 0.6"-DIAMETER, SEVEN-WIRE, LOW-RELAXATION STRAND.
f's = 58,590 LBS/STRAND
f*y = 52,700 LBS/STRAND

COMPOSITE SLAB:
CONVENTIONAL REINFORCING BARS:
fy = 60,000 PSI
f'c = 4,000 PSI

ALLOWANCE FOR FUTURE WEARING SURFACE: 30 PSF

ALLOWANCE FOR STEEL DECK FORMS: 15 PSF

LIVE LOAD: HS25-44

BARS REQUIRED FOR ONE BEAM

MARK	TYPE	R	X	LENGTH	NO. REQ'D
#7E1	2	3 1/8"	5'-0"	5'-8"	4
#8E2	2	3 1/2"	4'-11"	9'-10"	2
#4H1	3	1 1/2"	---	4'-1 1/2"	42
#4S1	4	1 3/4"	2'-5 1/4"	5'- 1/2"	151
#4S2	2	1 1/2"	5'-0"	5'-11"	302
#4T1	1	---	---	60'-0"	4
#4T2	1	---	---	3'-3"	119

BAR BENDING DIAGRAM

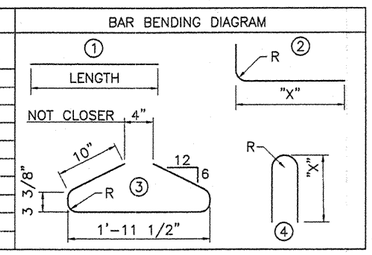

AS-BUILT INFORMATION
CONTRACTOR David Nunnley Const. Inc. DATE
STAKED BY Billingsley Engr. DATE
INSPECTOR'S ACCEPTANCE BY COA DATE
FIELD VERIFICATION BY COA/WCI DATE
DRAWINGS CORRECTED BY WCI DATE 3/07
MICRO-FILM INFORMATION
RECORDED BY DATE
NO.

BENCH MARKS
THE STA. IS A USGS TABLET STAMPED 'BLACK-2 1977' SET FLUSH W/ THE GROUND. THE STA. IS LOCATED 8.5 MI. N.W. OF DOWNTOWN ALBUQ. TO REACH THE STA. FROM THE INTX OF COORS/-40 GO N. ON COORS 5.8 MI. TO PARADISE BLVD. TURN LEFT GO W. ON PARADISE BLVD. 1.1 MI. TO GOLF COURSE RD. TURN RIGHT GO N. ON GOLF COURSE RD. 1.3 MI. TO McMAHON BLVD. THE STA. IS ON THE LEFT.
ELEVATION = 5213.926 FT. (2ND ORDER) (NGVD29)

SURVEY INFORMATION
FIELD NOTES
NO. | BY | DATE

ENGINEER'S SEAL
GARY W. KINCHEN NEW MEXICO 14366 PROFESSIONAL ENGINEER
OCTOBER 28, 2005

NO.	DATE	REMARKS	BY

REVISIONS

WILSON & COMPANY, ENGINEERS & ARCHITECTS

		DATE
DESIGNED BY	GWK	OCT 2005
DRAWN BY	CRH	OCT 2005
CHECKED BY	SFP	OCT 2005

CITY OF ALBUQUERQUE
DEPARTMENT OF MUNICIPAL DEVELOPMENT
TRANSPORTATION DIVISION

McMAHON BLVD. EXTENSION - LAS CALABACILLAS BRIDGE
PSC GIRDER TYPE BT-63, SPAN 2

Design Review Committee: PROVED — DESIGN REVIEW COMMITTEE
City Engineer Approval: PROVED — CITY ENGINEER
Last Design Update | Mo./Day/Yr. | Mo./Day/Yr.

City Project No.	Zone Map No.	Sheet	Of
COA 681602	A-10-Z	5-13	

WILSON & COMPANY

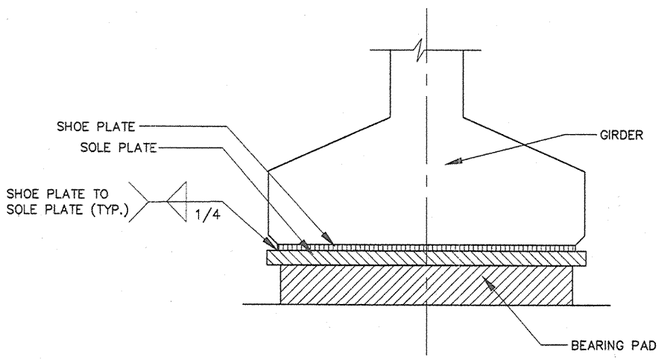

SOLE PLATE
CONNECTION DETAIL
NO SCALE

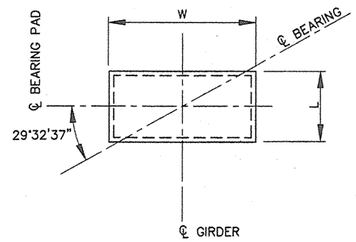

BEARING PAD PLAN
NO SCALE

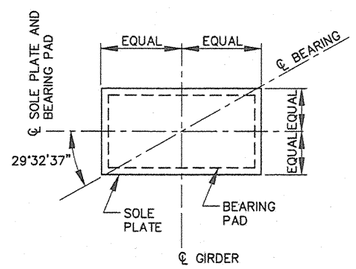

SOLE PLATE PLAN
NO SCALE

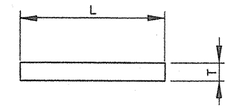

ABUT. BEARING PAD SECTION
NO SCALE

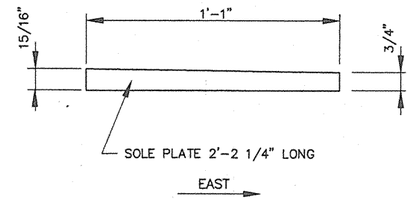

SIDE ELEVATION @
PIER SOLE PLATE
NO SCALE

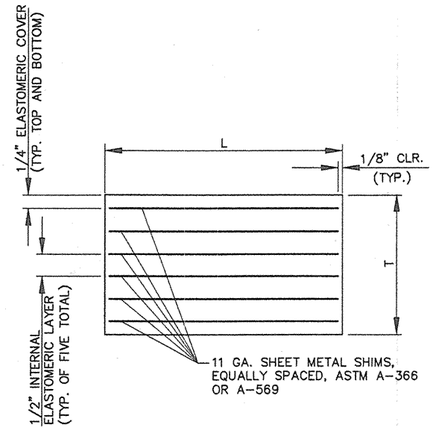

PIER BEARING PAD SECTION
NO SCALE

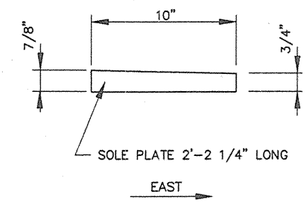

SIDE ELEVATION @
ABUTMENT SOLE PLATE
NO SCALE

ELASTOMERIC BEARING PAD SCHEDULE

LOCATION	NO. INTERNAL LAMS	NO. SHIMS	INTERNAL LAM THICKNESS	SHIM THICKNESS	TOTAL THICKNESS	Δ	DIMENSIONS: FINAL T, TOTAL THICKNESS - Δ	DIMENSIONS: W	DIMENSIONS: L	DESIGN LOAD (K): DL	DESIGN LOAD (K): LL	NO. REQUIRED	MOVEMENT LENGTH
			(IN)	(IN)	(IN)	(IN)	(IN)	(FT-IN)	(IN)	(K)	(K)		(IN)
ABUTMENTS	1	0	1/2	-	1/2	-	1/2	1'-7"	8	51	67	24	0
										51	67	24	0
PIERS	5	6	1/2	1/8	3 3/4	1/8	3 5/8	1'-7"	11	123	74	24	0

AS-BUILT INFORMATION
CONTRACTOR David Martinez Const. Inc. DATE
STAMP BY Billingsley Engr. DATE
INSPECTOR'S ACCEPTANCE BY COA DATE
FIELD VERIFICATION BY COA/WC1 DATE
DRAWINGS CORRECTED BY WC1 DATE 3/07
MICRO-FILM INFORMATION
RECORDED BY DATE
NO.

BENCH MARKS
THE STA. IS A USGS TABLET STAMPED 'BLACK-2 1977' SET FLUSH W/ THE GROUND. THE STA. IS LOCATED 8.5 MI. N.W. OF DOWNTOWN ALBUQ. TO REACH THE STA. FROM THE INTX OF COORS/-40 GO N. ON COORS 5.8 MI. TO PARADISE BLVD. TURN LEFT GO W. ON PARADISE BLVD. 1.1 MI. TO GOLF COURSE RD. TURN RIGHT GO N. ON GOLF COURSE RD. 1.3 MI. TO McMAHON BLVD. THE STA. IS ON THE LEFT.
ELEVATION = 5213.926 FT. (2ND ORDER) (NGVD29)

SURVEY INFORMATION
FIELD NOTES

NO.	BY	DATE

ENGINEER'S SEAL
GARY W. KINCHEN NEW MEXICO 14368 REGISTERED PROFESSIONAL ENGINEER
OCTOBER 28, 2005

NO.	DATE	REMARKS	BY
		REVISIONS	

WILSON & COMPANY, ENGINEERS & ARCHITECTS
DESIGNED BY GWK DATE OCT 2005
DRAWN BY CRH DATE OCT 2005
CHECKED BY SFP DATE OCT 2005

CITY OF ALBUQUERQUE
DEPARTMENT OF MUNICIPAL DEVELOPMENT
TRANSPORTATION DIVISION

McMAHON BLVD. EXTENSION – LAS CALABACILLAS BRIDGE
ELASTOMERIC BEARING DETAILS

Design Review Committee: APPROVED NOV 2 7 2006 DESIGN REVIEW COMMITTEE
City Engineer Approval: APPROVED NOV 2 7 2006 CITY ENGINEER
Last Design Update | Mo./Day/Yr. | Mo./Day/Yr.

City Project No. COA 681602 | Zone Map No. A-10-Z | Sheet 5 Of 14

WILSON & COMPANY

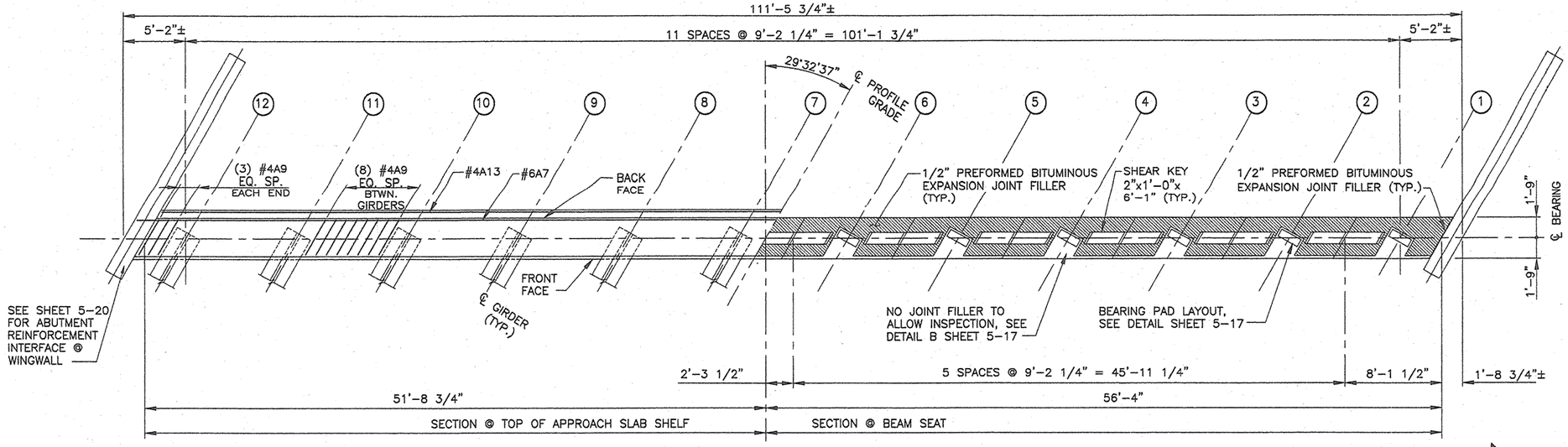

ABUTMENT NO. 1 – PLAN

SCALE: 1:60

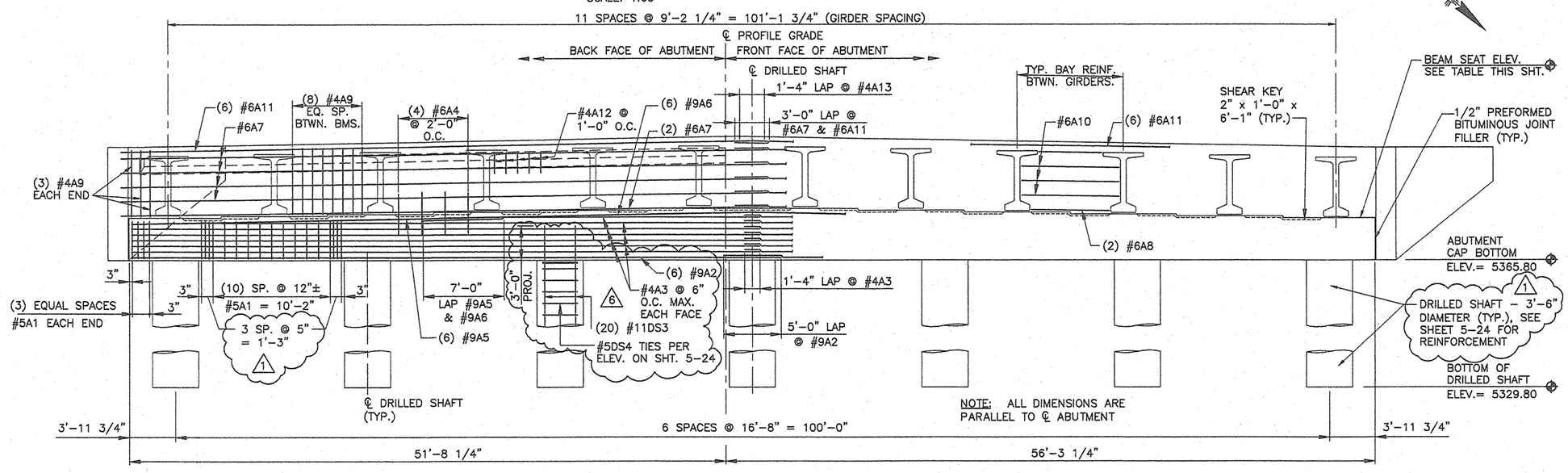

ABUTMENT NO. 1 – ELEVATION

SCALE: 1:60

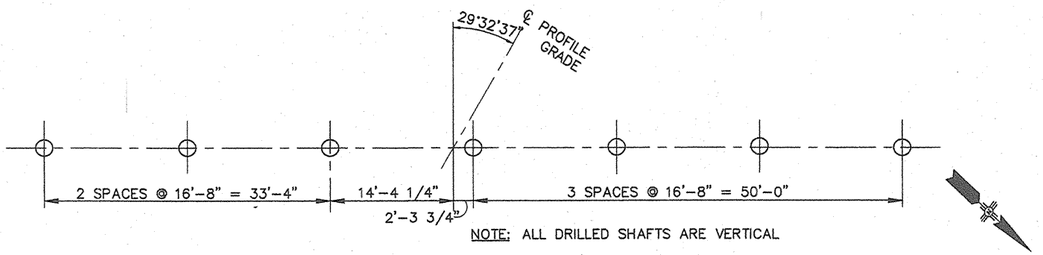

NOTE: ALL DRILLED SHAFTS ARE VERTICAL

DRILLED SHAFT LAYOUT

NOT TO SCALE

GIRDER	ABUTMENT 1
1	5369.82
2	5369.93
3	5370.03
4	5370.14
5	5370.24
6	5370.35
7	5370.37
8	5370.16
9	5369.94
10	5369.73
11	5369.51
12	5369.30

BEAM SEAT ELEVATIONS

AS-BUILT INFORMATION
CONTRACTOR David Thornton Const. Inc. DATE
WORK STAKED BY Billingsley Engr. DATE
INSPECTOR'S ACCEPTANCE BY COA DATE
FIELD VERIFICATION BY COA/WCL DATE
DRAWINGS CORRECTED BY WCL DATE 3/07
MICRO-FILM INFORMATION
RECORDED BY DATE
NO.

BENCH MARKS
THE STA. IS A USGS TABLET STAMPED 'BLACK-2 1977' SET FLUSH W/ THE GROUND. THE STA. IS LOCATED 8.5 MI. N.W. OF DOWNTOWN ALBUQ. TO REACH THE STA. FROM THE INTX OF COORS/I-40 GO N. ON COORS 5.8 MI. TO PARADISE BLVD. TURN LEFT GO W. ON PARADISE BLVD. 1.1 MI. TO GOLF COURSE RD. TURN RIGHT GO N. ON GOLF COURSE RD. 1.3 MI. TO McMAHON BLVD. THE STA. IS ON THE LEFT.
ELEVATION = 5213.926 FT. (2ND ORDER) (NGVD29)

SURVEY INFORMATION
FIELD NOTES
NO. | BY | DATE

ENGINEER'S SEAL
GARY W. KINCHEN NEW MEXICO 14368 PROFESSIONAL ENGINEER
OCTOBER 28, 2005

REVISIONS

NO.	DATE	REMARKS	BY
6	6-16-06	REVISED REINF. ELEVATION	CRH
1	2-1-06	REVISED DRILLED SHAFT DIAMETER	CRH

WILSON & COMPANY, ENGINEERS & ARCHITECTS
DESIGNED BY GWK DATE OCT 2005
DRAWN BY CRH DATE OCT 2005
CHECKED BY SFP DATE OCT 2005

CITY OF ALBUQUERQUE
DEPARTMENT OF MUNICIPAL DEVELOPMENT
TRANSPORTATION DIVISION

McMAHON BLVD. EXTENSION – LAS CALABACILLAS BRIDGE
ABUTMENT 1 PLAN AND ELEVATION

Design Review Committee | City Engineer Approval | Last Design Update | Mo./Day/Yr. | Mo./Day/Yr.

City Project No. COA 681602 | Zone Map No. A-10-Z | Sheet 5 Of 15

WILSON & COMPANY

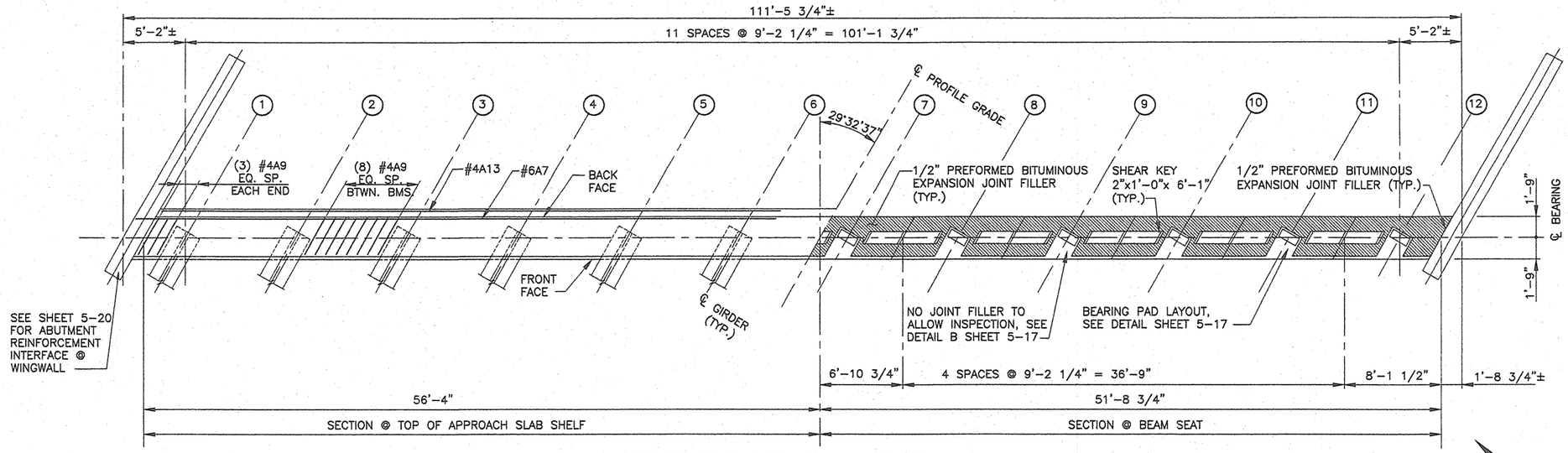

ABUTMENT NO. 2 – PLAN

SCALE: 1:60

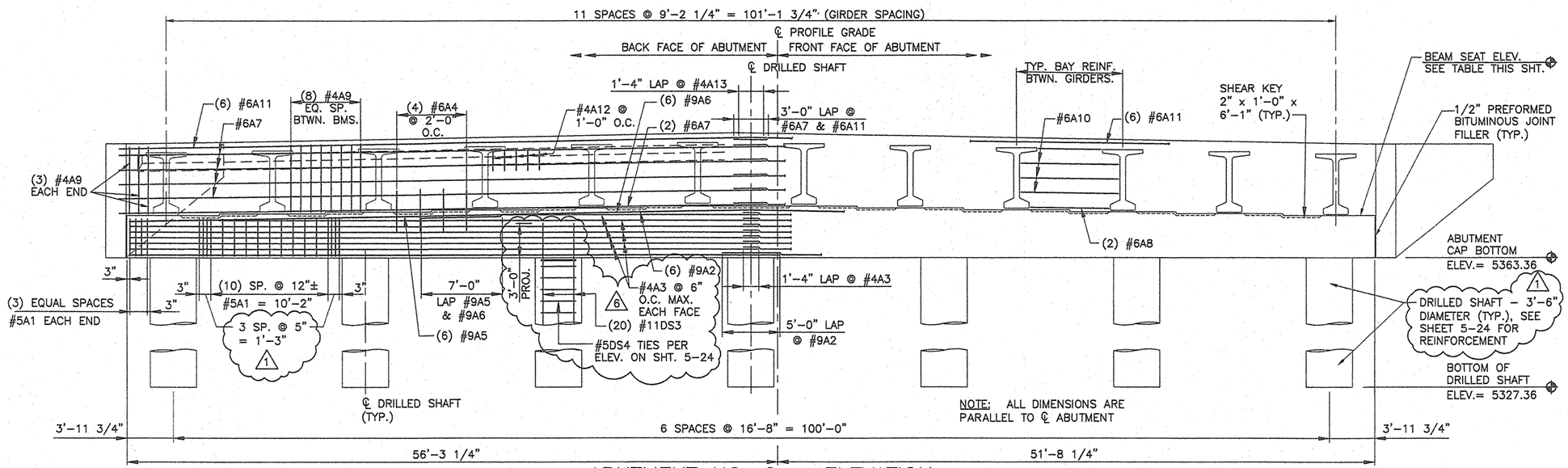

ABUTMENT NO. 2 – ELEVATION

SCALE: 1:60

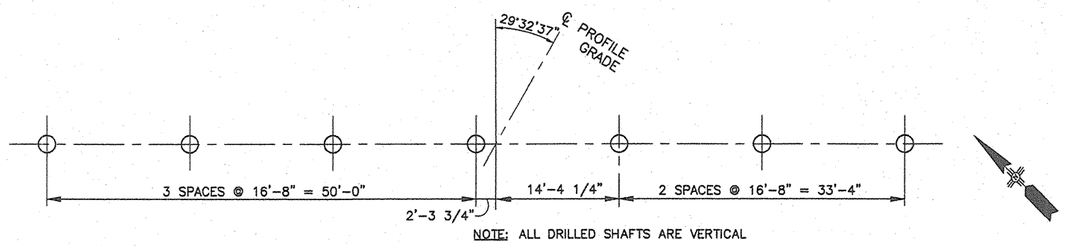

NOTE: ALL DRILLED SHAFTS ARE VERTICAL

DRILLED SHAFT LAYOUT

NOT TO SCALE

GIRDER	ABUTMENT 2
1	5367.39
2	5367.49
3	5367.60
4	5367.70
5	5367.81
6	5367.91
7	5367.94
8	5367.72
9	5367.51
10	5367.29
11	5367.07
12	5366.86

BEAM SEAT ELEVATIONS

AS-BUILT INFORMATION
CONTRACTOR David Montoya Const. Inc. DATE
WORK ACCEPTED BY Billingsley Engr. DATE
PERFORMED BY COA DATE
FIELD VERIFICATION BY CDS/WCI DATE
DRAWINGS CORRECTED BY WCI DATE 5/07
MICRO-FILM INFORMATION
RECORDED BY DATE
NO.

BENCH MARKS
THE STA. IS A USGS TABLET STAMPED "BLACK-2 1977" SET FLUSH W/ THE GROUND. THE STA. IS LOCATED 8.5 MI. N.W. OF DOWNTOWN ALBUQ. TO REACH THE STA. FROM THE INTX OF COORS/I-40 GO N. ON COORS 5.8 MI. TO PARADISE BLVD. TURN LEFT GO W. ON PARADISE BLVD. 1.1 MI. TO GOLF COURSE RD. TURN RIGHT GO N. ON GOLF COURSE RD. 1.3 MI. TO McMAHON BLVD. THE STA. IS ON THE LEFT.
ELEVATION = 5213.926 FT. (2ND ORDER) (NGVD29)

SURVEY INFORMATION
FIELD NOTES
NO. | BY | DATE

ENGINEER'S SEAL
GARY W. KINCHEN NEW MEXICO 14366 REGISTERED PROFESSIONAL ENGINEER
OCTOBER 28, 2005

NO.	DATE	REMARKS	BY
6	6-16-06	REVISE REINF. ELEVATION	CRH
1	2-1-06	REVISED DRILED SHAFT DIAMETER	CRH

REVISIONS

WILSON & COMPANY, ENGINEERS & ARCHITECTS
DESIGNED BY GWK DATE OCT 2005
DRAWN BY CRH DATE OCT 2005
CHECKED BY SFP DATE OCT 2005

CITY OF ALBUQUERQUE
DEPARTMENT OF MUNICIPAL DEVELOPMENT
TRANSPORTATION DIVISION

McMAHON BLVD. EXTENSION – LAS CALABACILLAS BRIDGE
ABUTMENT 2 PLAN AND ELEVATION

Design Review Committee | City Engineer Approval | Last Design Update | Mo./Day/Yr. | Mo./Day/Yr.

City Project No. COA 681602 | Zone Map No. A-10-Z | Sheet 5 Of 16

WILSON & COMPANY

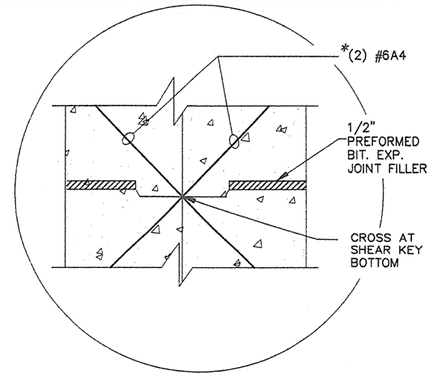

DETAIL "C" CROSS BARS AT SHEAR KEY

SCALE: 3/4" = 1'-0"

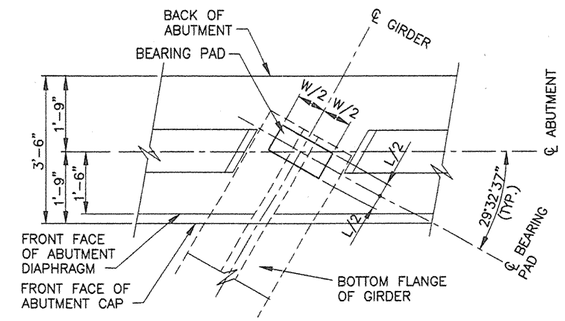

BEARING PAD LAYOUT PLAN @ ABUTMENT

SCALE 1:20

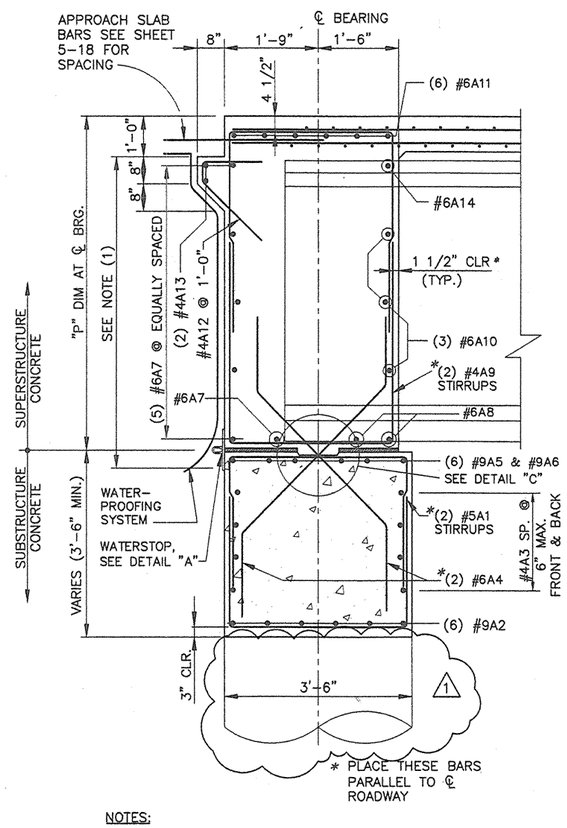

NOTES:

1. APPLY A WATERPROOFING SYSTEM FOR PROTECTION OF BACKSIDES OF BRIDGE COMPONENTS. SUBMIT SYSTEM TO PROJECT ENGINEER FOR APPROVAL PRIOR TO USE.
2. ALL DIMENSIONS ARE PERPENDICULAR TO ℄ BEARING.

TYPICAL SECTION (BETWEEN BEAMS)

SCALE: 3/4" = 1'-0"

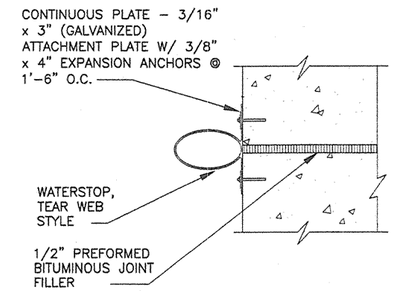

DETAIL "A" WATERSTOP

NOT TO SCALE

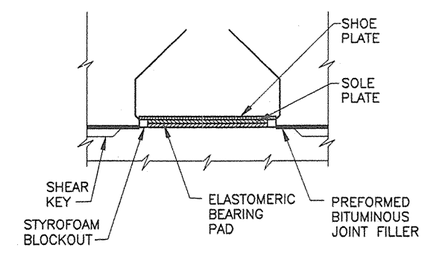

DETAIL "B" INSPECTION ACCESS

NOT TO SCALE

AS-BUILT INFORMATION
CONTRACTOR David Montoya Const. Inc.
WERE STAKES, GRADES, MARKS, REFERENCES PROVIDED BY Ritwesley Engr. DATE
FIELD INSPECTION AND ACCEPTANCE BY COA DATE
FIELD VERIFICATION BY COA/WCL DATE
DRAWINGS CORRECTED BY WCL DATE 3/07
RECORDED BY MICRO-FILM INFORMATION DATE
NO.

BENCH MARKS
THE STA. IS A USGS TABLET STAMPED "BLACK-2 1977" SET FLUSH W/ THE GROUND. THE STA. IS LOCATED 8.5 MI. N.W. OF DOWNTOWN ALBUQ. TO REACH THE STA. FROM THE INTX OF COORS/I-40 GO N. ON COORS 5.8 MI. TO PARADISE BLVD. TURN LEFT GO W. ON PARADISE BLVD. 1.1 MI. TO GOLF COURSE RD. TURN RIGHT GO N. ON GOLF COURSE RD. 1.3 MI. TO McMAHON BLVD. THE STA. IS ON THE LEFT.
ELEVATION = 5213.926 FT. (2ND ORDER) (NGVD29)

SURVEY INFORMATION
FIELD NOTES

NO.	BY	DATE

ENGINEER'S SEAL
GARY W. KINCHEN NEW MEXICO 14366 REGISTERED PROFESSIONAL ENGINEER
OCTOBER 28, 2005

NO.	DATE	REMARKS	BY
1	2-1-06	REVISED DRILED SHAFT DIAMETER	CRH

REVISIONS

WILSON & COMPANY, ENGINEERS & ARCHITECTS

DESIGNED BY	GWK	DATE OCT 2005
DRAWN BY	CRH	DATE OCT 2005
CHECKED BY	SFP	DATE OCT 2005

CITY OF ALBUQUERQUE
DEPARTMENT OF MUNICIPAL DEVELOPMENT
TRANSPORTATION DIVISION

McMAHON BLVD. EXTENSION – LAS CALABACILLAS BRIDGE
ABUTMENT DETAILS

Design Review Committee	City Engineer Approval	Last Design Update	Mo./Day/Yr.	Mo./Day/Yr.

City Project No.	Zone Map No.	Sheet	Of
COA 681602	A-10-Z	5-17	

WILSON & COMPANY

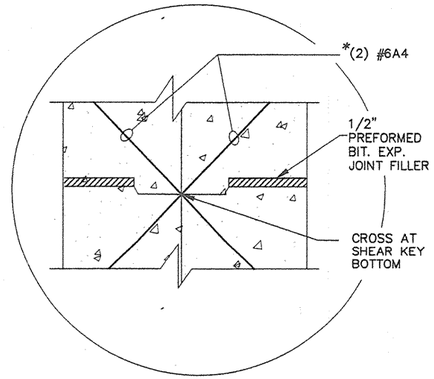

DETAIL "C" CROSS BARS AT SHEAR KEY

SCALE: 3/4" = 1'-0"

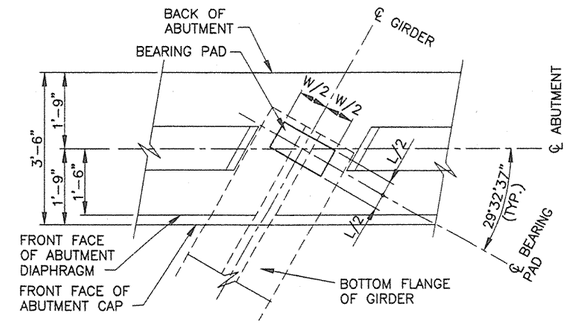

BEARING PAD LAYOUT PLAN @ ABUTMENT

SCALE 1:20

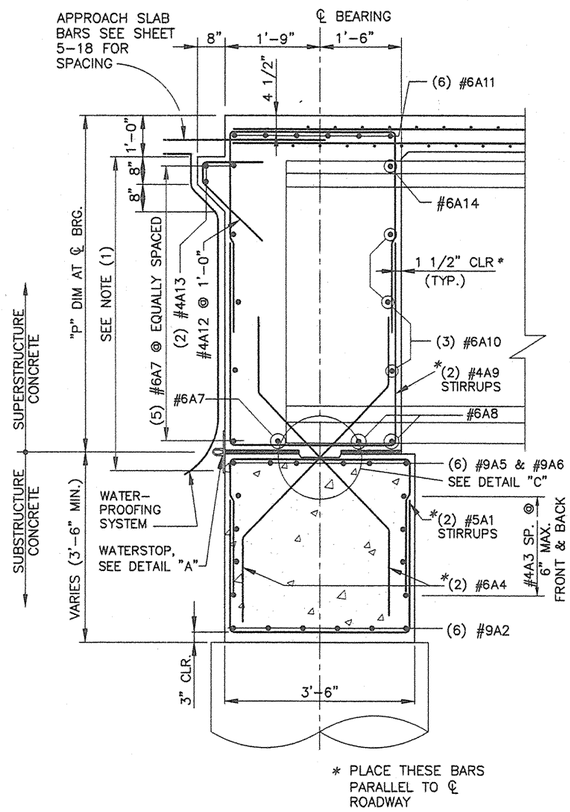

* PLACE THESE BARS PARALLEL TO ℄ ROADWAY

NOTES:

1. APPLY A WATERPROOFING SYSTEM FOR PROTECTION OF BACKSIDES OF BRIDGE COMPONENTS. SUBMIT SYSTEM TO PROJECT ENGINEER FOR APPROVAL PRIOR TO USE.
2. ALL DIMENSIONS ARE PERPENDICULAR TO ℄ BEARING.

TYPICAL SECTION (BETWEEN BEAMS)

SCALE: 3/4" = 1'-0"

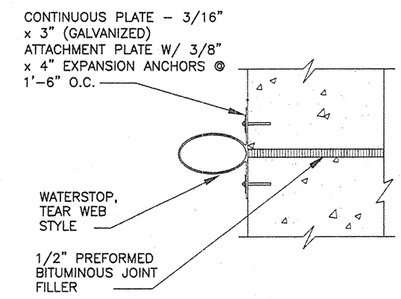

DETAIL "A" WATERSTOP

NOT TO SCALE

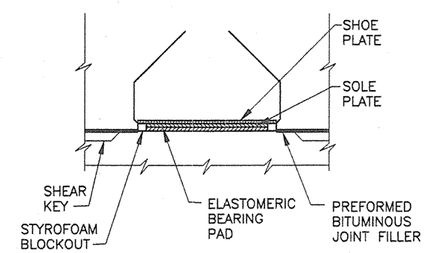

DETAIL "B" INSPECTION ACCESS

NOT TO SCALE

AS-BUILT INFORMATION

CONTRACTOR David Montoya Const. Inc. DATE
WORK STAKED BY Billingsley Engr. DATE
MODIFICATIONS MADE BY COA
FIELD VERIFICATION BY COA/WCL DATE
DRAWINGS CORRECTED BY WCL DATE 3/07
RECORDED BY MICRO-FILM INFORMATION DATE
NO.

BENCH MARKS

THE STA. IS A USGS TABLET STAMPED 'BLACK-2 1977' SET FLUSH W/ THE GROUND. THE STA. IS LOCATED 8.5 MI. N.W. OF DOWNTOWN ALBUQ. TO REACH THE STA. FROM THE INTX OF COORS/I-40 GO N. ON COORS 5.8 MI. TO PARADISE BLVD. TURN LEFT GO W. ON PARADISE BLVD. 1.1 MI. TO GOLF COURSE RD. TURN RIGHT GO N. ON GOLF COURSE RD. 1.3 MI. TO McMAHON BLVD. THE STA. IS ON THE LEFT.

ELEVATION = 5213.926 FT. (2ND ORDER) (NGVD29)

SURVEY INFORMATION

NO.	FIELD NOTES BY	DATE

ENGINEER'S SEAL

GARY W. KINCHEN NEW MEXICO 14368 PROFESSIONAL ENGINEER
OCTOBER 28, 2005

NO.	DATE	REMARKS	BY
		REVISIONS	

WILSON & COMPANY, ENGINEERS & ARCHITECTS

DESIGNED BY	GWK	DATE OCT 2005
DRAWN BY	CRH	DATE OCT 2005
CHECKED BY	SFP	DATE OCT 2005

CITY OF ALBUQUERQUE
DEPARTMENT OF MUNICIPAL DEVELOPMENT
TRANSPORTATION DIVISION

McMAHON BLVD. EXTENSION – LAS CALABACILLAS BRIDGE

ABUTMENT DETAILS

Design Review Committee: APPROVED NOV 2005 DESIGN REVIEW COMMITTEE
City Engineer Approval: APPROVED 11/17/05 CITY ENGINEER
Last Design Update | Mo./Day/Yr. | Mo./Day/Yr.

City Project No.	Zone Map No.	Sheet	Of
COA 681602	A-10-Z	5-17	

WILSON & COMPANY

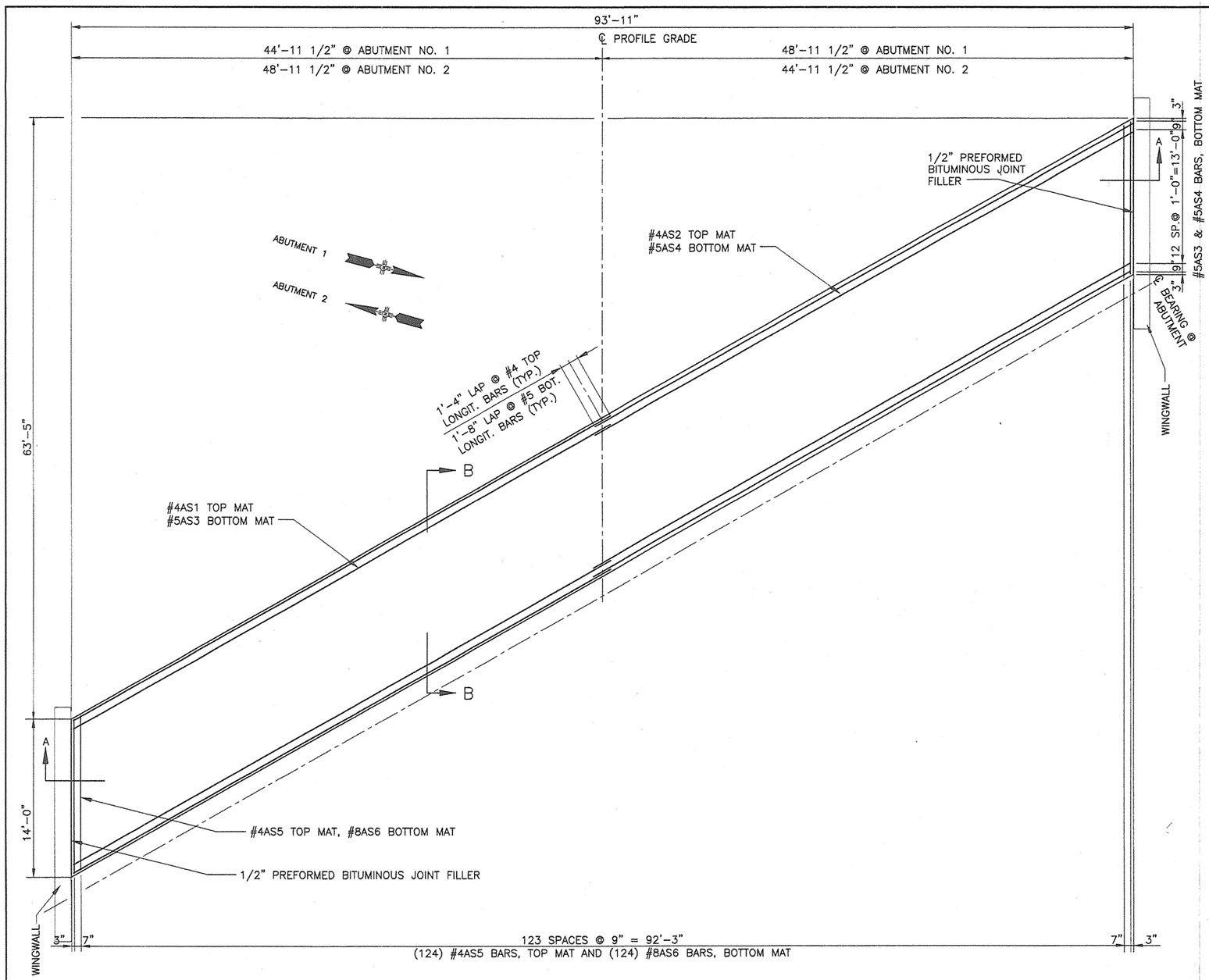

APPROACH SLAB PLAN

SCALE: 1:60

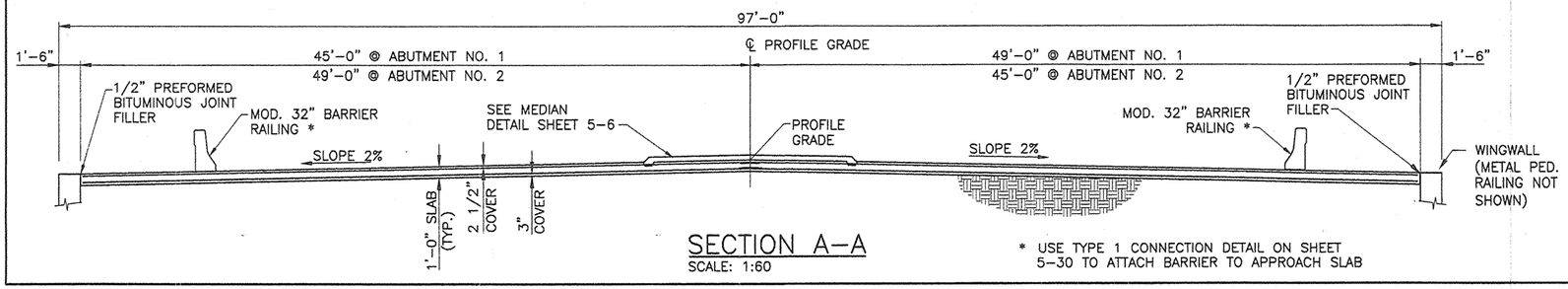

SECTION A-A

SCALE: 1:60

* USE TYPE 1 CONNECTION DETAIL ON SHEET 5-30 TO ATTACH BARRIER TO APPROACH SLAB

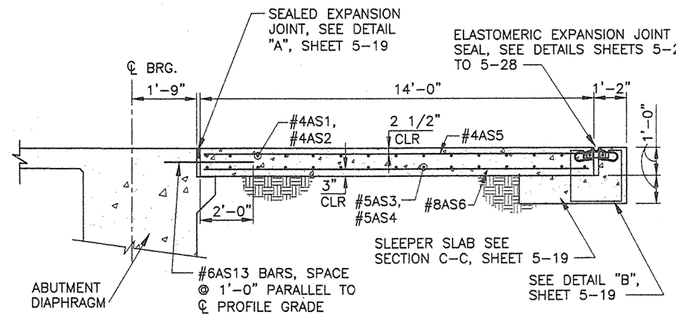

SECTION B-B

SCALE: 1:60

NO.	DATE	REMARKS	BY
		REVISIONS	

WILSON & COMPANY, ENGINEERS & ARCHITECTS

		DATE
DESIGNED BY	CWK	OCT 2005
DRAWN BY	CRH	OCT 2005
CHECKED BY	SFP	OCT 2005

ENGINEER'S SEAL

GARY W. KINCHEN NEW MEXICO 14366 REGISTERED PROFESSIONAL ENGINEER
OCTOBER 28, 2005

SURVEY INFORMATION

FIELD NOTES

NO.	BY	DATE

BENCH MARKS

THE STA. IS A USGS TABLET STAMPED "BLACK-2 1977" SET FLUSH W/ THE GROUND. THE STA. IS LOCATED 8.5 MI. N.W. OF DOWNTOWN ALBUQ. TO REACH THE STA. FROM THE INTX. OF COORS/I-40 GO N. ON COORS 5.8 MI. TO PARADISE BLVD. TURN LEFT GO W. ON PARADISE BLVD. 1.1 MI. TO GOLF COURSE RD. TURN RIGHT GO N. ON GOLF COURSE RD. 1.3 MI. TO McMAHON BLVD. THE STA. IS ON THE LEFT.

ELEVATION = 5213.926 FT. (2ND ORDER) (NGVD29)

AS-BUILT INFORMATION

		DATE
CONTRACTOR	David Martinez Const. Inc.	
WORK DONE BY	Ballingsley Eng.	
INSPECTOR'S ACCEPTANCE BY	COA	
FIELD VERIFICATION BY	COA/WCI	
DRAWINGS CORRECTED BY	WCI	3/07

MICRO-FILM INFORMATION

RECORDED BY	DATE
NO.	

CITY OF ALBUQUERQUE
DEPARTMENT OF MUNICIPAL DEVELOPMENT
TRANSPORTATION DIVISION

McMAHON BLVD. EXTENSION – LAS CALABACILLAS BRIDGE

APPROACH SLAB SECTION

Design Review Committee	City Engineer Approval	Last Design Update	Mo./Day/Yr.	Mo./Day/Yr.
APPROVED DESIGN REVIEW COMMITTEE	APPROVED CITY ENGINEER			

City Project No.	Zone Map No.	Sheet	Of
COA 681602	A-10-Z	5-18	

WILSON & COMPANY

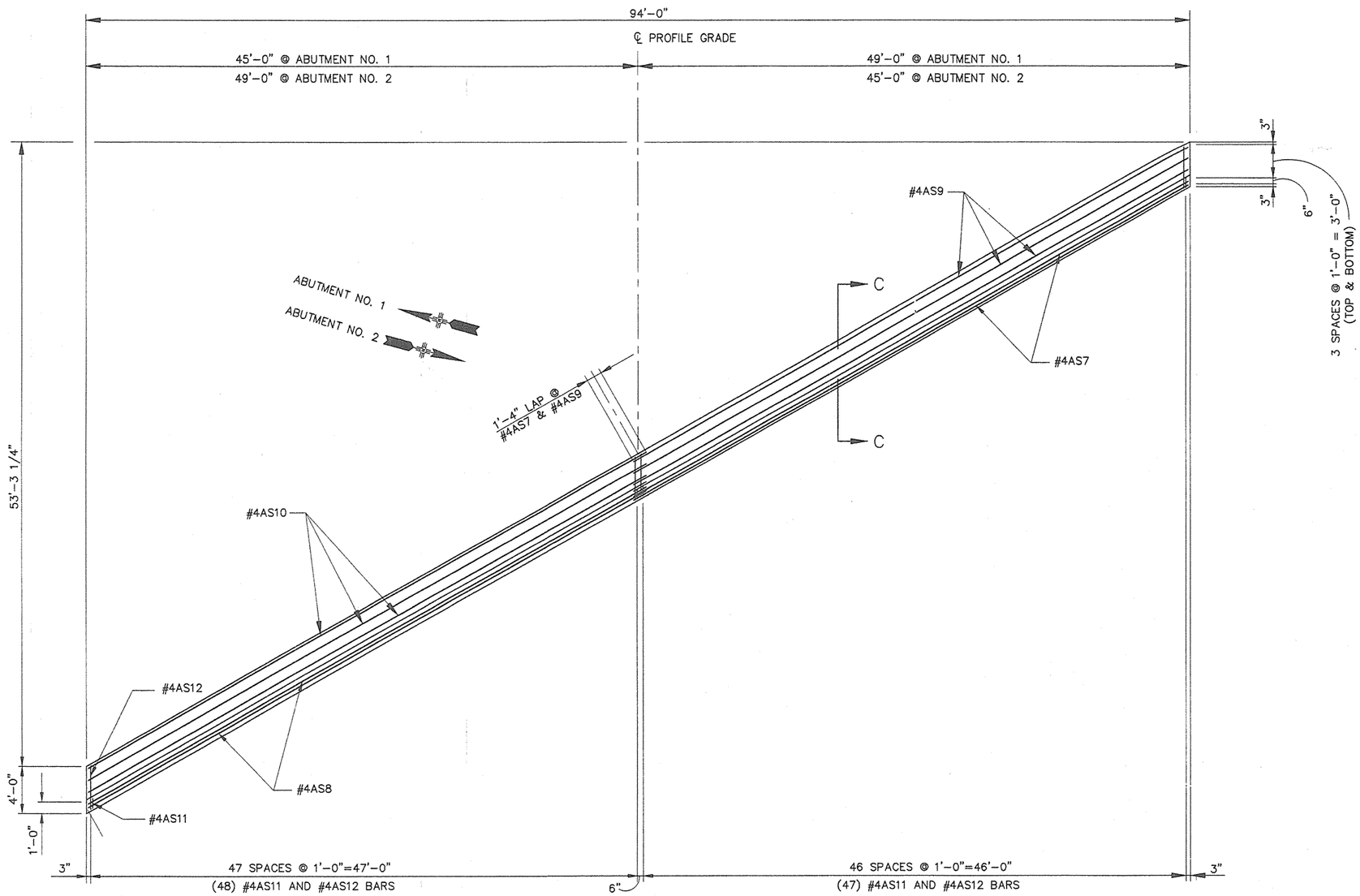

SLEEPER PLAN

SCALE: 1:60

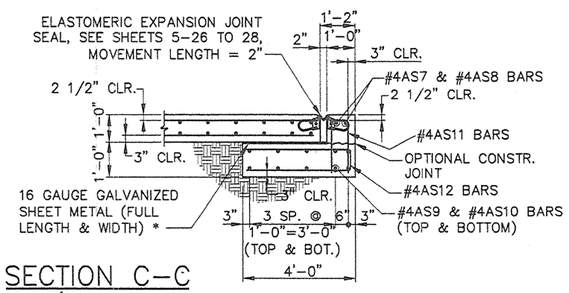

SECTION C-C

SCALE: 1/2" = 1'-0"

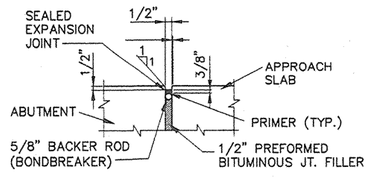

DETAIL "A" – ABUT. JOINT

NO SCALE

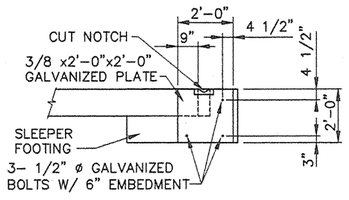

END PLATES ARE AT EACH SLEEPER SLAB END (4 TOTAL) *

DETAIL "B" – END PLATE

SCALE: 1/2" = 1'-0"

* ALL MATERIAL AND LABOR IS INCIDENTAL TO THE CONSTRUCTION.

AS-BUILT INFORMATION

CONTRACTOR David Montoya Const. Inc
WORK STAKED BY Billingsley Engr.
INSPECTOR ACCEPTANCE BY COA DATE
VERIFICATION BY COA/WCL DATE
DRAWINGS CORRECTED BY WCL DATE 3/03
RECORDED BY DATE
NO.

BENCH MARKS

THE STA. IS A USGS TABLET STAMPED 'BLACK-2 1977' SET FLUSH W/ THE GROUND. THE STA. IS LOCATED 8.5 MI. N.W. OF DOWNTOWN ALBUQ. TO REACH THE STA. FROM THE INTX OF COORS/I-40 GO N. ON COORS 5.8 MI. TO PARADISE BLVD. TURN LEFT GO W. ON PARADISE BLVD. 1.1 MI. TO GOLF COURSE RD. TURN RIGHT GO N. ON GOLF COURSE RD. 1.3 MI. TO McMAHON BLVD. THE STA. IS ON THE LEFT.

ELEVATION = 5213.926 FT. (2ND ORDER) (NGVD29)

SURVEY INFORMATION

FIELD NOTES

NO.	BY	DATE

ENGINEER'S SEAL

GARY W. KINCHEN NEW MEXICO 14366 PROFESSIONAL ENGINEER
OCTOBER 28, 2005

NO.	DATE	REMARKS	BY

REVISIONS

WILSON & COMPANY, ENGINEERS & ARCHITECTS

DESIGNED BY	GWK	DATE OCT 2005
DRAWN BY	CRH	DATE OCT 2005
CHECKED BY	SFP	DATE OCT 2005

CITY OF ALBUQUERQUE
DEPARTMENT OF MUNICIPAL DEVELOPMENT
TRANSPORTATION DIVISION

McMAHON BLVD. EXTENSION – LAS CALABACILLAS BRIDGE

APPROACH SLAB SLEEPER SLAB

Design Review Committee: APPROVED NOV 17 2005 DESIGN REVIEW COMMITTEE

City Engineer Approval: APPROVED NOV 17 2005 CITY ENGINEER

Last Design Update | Mo./Day/Yr. | Mo./Day/Yr.

City Project No. COA 681602 | Zone Map No. A-10-Z | Sheet 5 Of 19

WILSON & COMPANY

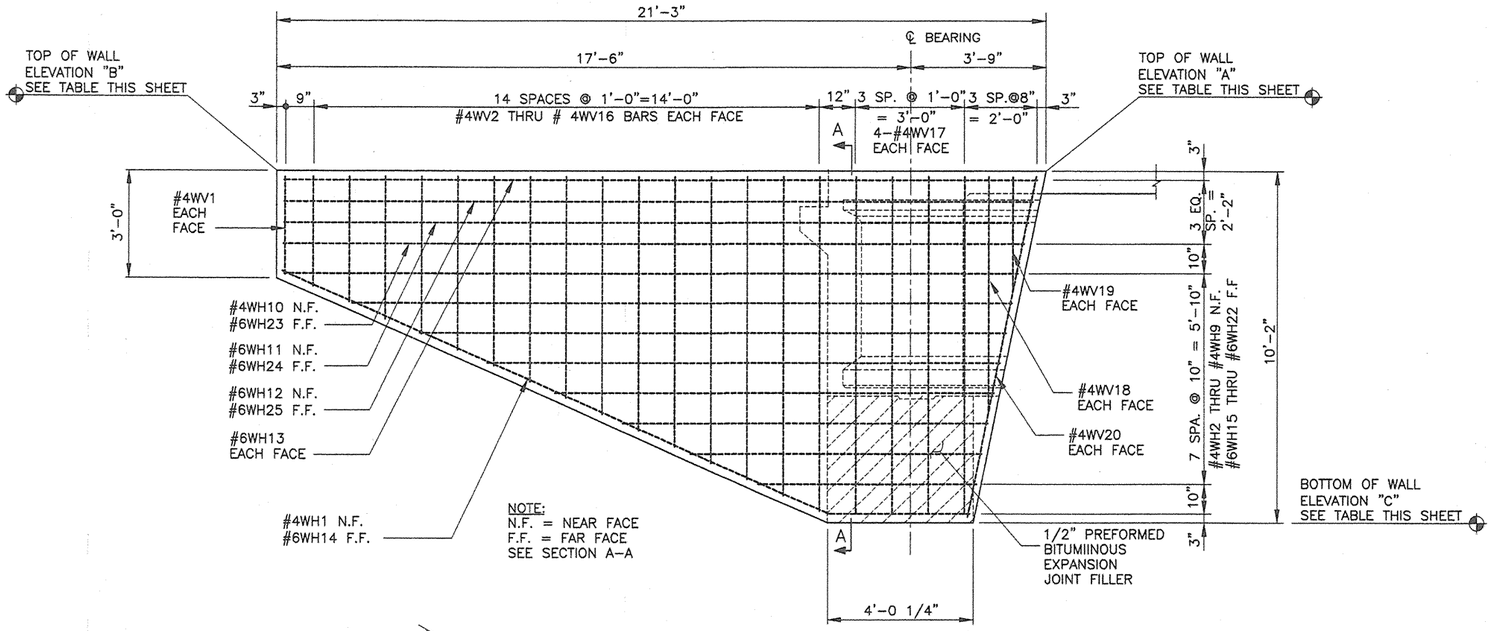

ELEVATION
SCALE: 1/2" = 1'-0"

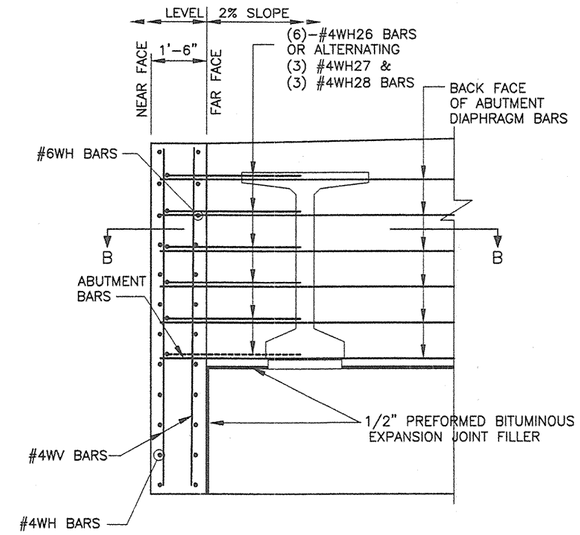

SECTION A-A
SCALE: 1/2" = 1'-0"

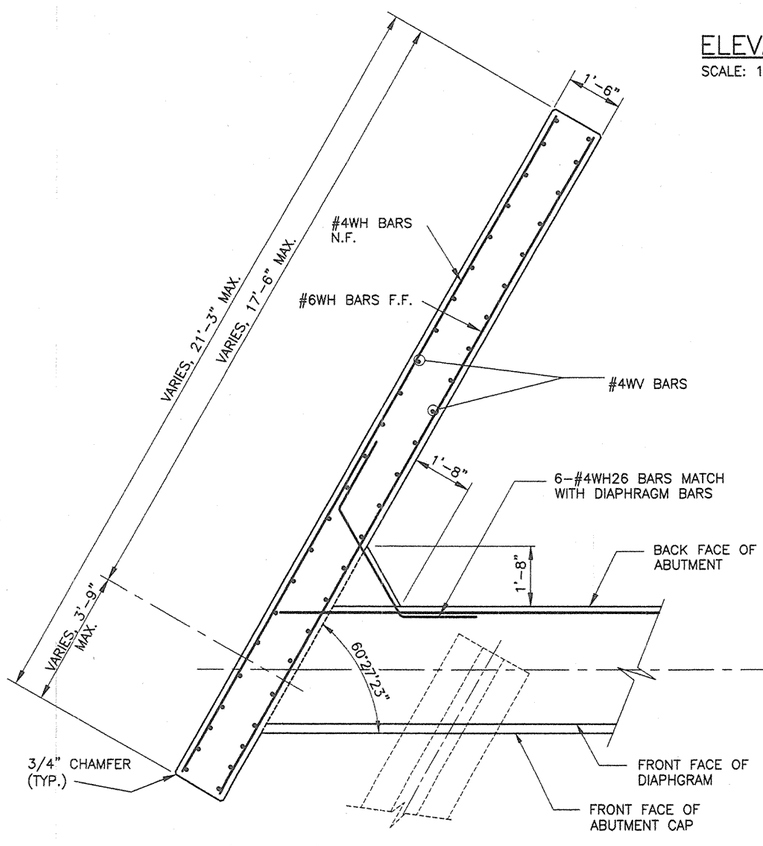

RIGHT WINGWALL (ABUT NO. 1)
LEFT WINGWALL (ABUT NO. 2)

SECTION B-B
SCALE: 1/2" = 1'-0"

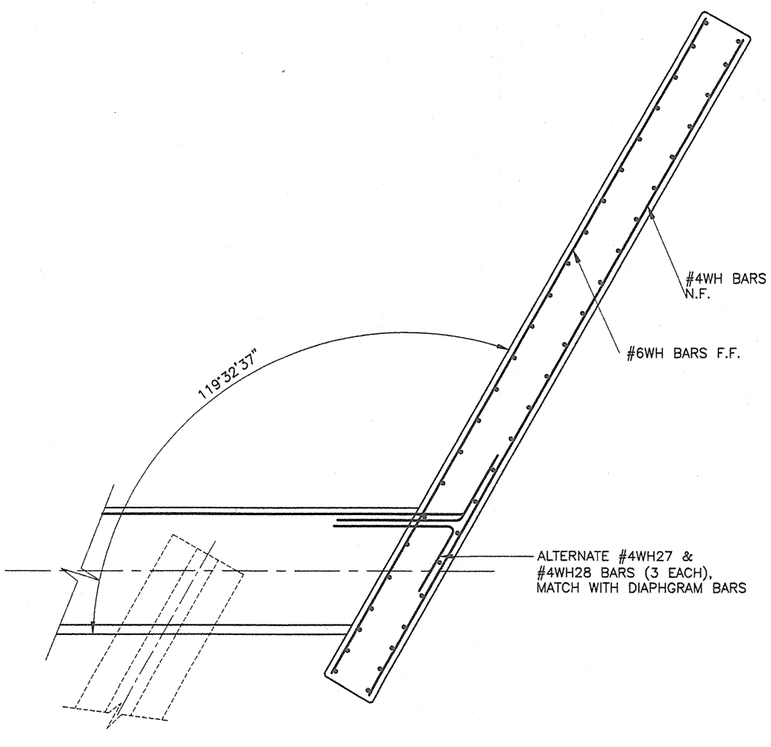

LEFT WINGWALL (ABUT NO. 1)
RIGHT WINGWALL (ABUT NO. 2)

NOTE:
SEE SHEETS 5-15 THRU 5-17 FOR
ABUTMENT DIAPHRAGM REINFORCING

	WALL	ELEVATIONS		
		A	B	C
ABUTMENT 1	LEFT	5376.15	5376.41	5365.98
	RIGHT	5375.58	5375.84	5365.41
ABUTMENT 2	LEFT	5373.76	5373.50	5363.60
	RIGHT	5373.19	5372.93	5363.03

WALL ELEVATIONS

AS-BUILT INFORMATION
CONTRACTOR David Donnoye Const. Inc. DATE
STAKED BY Billingsley Engr. DATE
INSPECTOR'S ACCEPTANCE BY CGA DATE
FIELD VERIFICATION BY CGA/WC1 DATE
DRAWINGS CORRECTED BY WC1 DATE 3/03
RECORDED BY MICRO-FILM INFORMATION DATE
NO. ELEVATION = 5213.926 FT. (2ND ORDER) (NGVD29)

BENCH MARKS
THE STA. IS A USGS TABLET STAMPED 'BLACK-2 1977' SET FLUSH W/ THE GROUND. THE STA. IS LOCATED 8.5 MI. N.W. OF DOWNTOWN ALBUQ. TO REACH THE STA. FROM THE INTX OF COORS/-40 GO N. ON COORS 5.8 MI. TO PARADISE BLVD. TURN LEFT GO W. ON PARADISE BLVD. 1.1 MI. TO GOLF COURSE RD. TURN RIGHT GO N. ON GOLF COURSE RD. 1.3 MI. TO McMAHON BLVD. THE STA. IS ON THE LEFT.

SURVEY INFORMATION
FIELD NOTES

NO.	BY	DATE

ENGINEER'S SEAL
GARY W. KINCHEN
NEW MEXICO
14388
REGISTERED PROFESSIONAL ENGINEER
OCTOBER 28, 2005

NO.	DATE	REMARKS	BY

REVISIONS

WILSON & COMPANY, ENGINEERS & ARCHITECTS
DESIGNED BY GWK DATE OCT 2005
DRAWN BY CRH DATE OCT 2005
CHECKED BY SFP DATE OCT 2005

CITY OF ALBUQUERQUE
DEPARTMENT OF MUNICIPAL DEVELOPMENT
TRANSPORTATION DIVISION

McMAHON BLVD. EXTENSION – LAS CALABACILLAS BRIDGE

WINGWALL DETAILS

Design Review Committee: APPROVED NOV 17 2005 DESIGN REVIEW COMMITTEE
City Engineer Approval: APPROVED NOV 17 2005 CITY ENGINEER
Last Design Update | Mo./Day/Yr. | Mo./Day/Yr.

City Project No. COA 681602 | Zone Map No. A-10-Z | Sheet 5-20 Of

WILSON & COMPANY

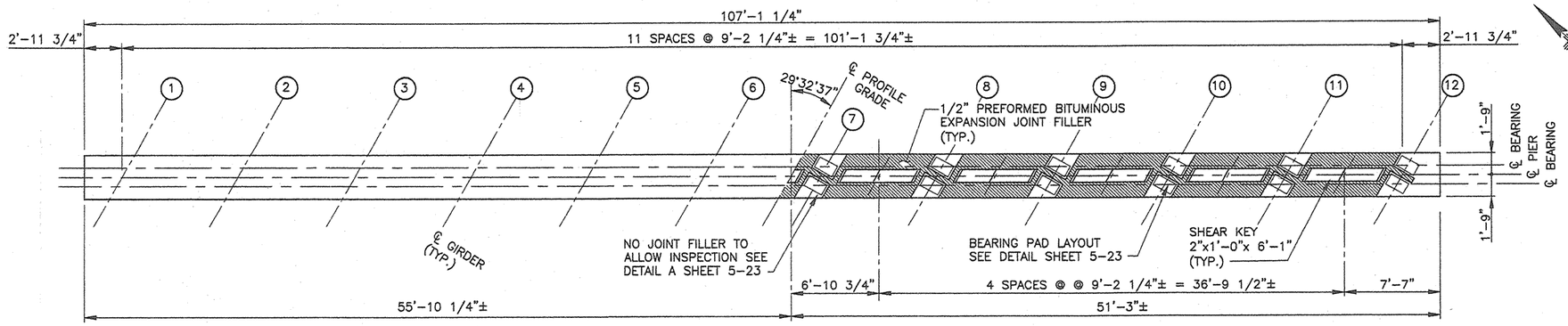

PIER PLAN @ BEAM SEAT

SCALE: 1:60

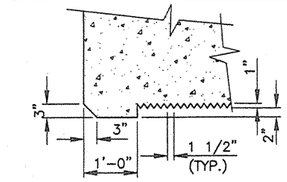

SECTION A-A

NOTES:

1. OBTAIN PROJECT ENGINEER'S APPROVAL OF FORM LINERS FOR THE FRACTURED FIN SURFACE TREATMENT PRIOR TO USE.
2. THE COSTS OF ALL LABOR AND MATERIALS TO INSTALL THE FRACTURED FIN SURFACE TREATMENT ARE INCLUDED IN AND INCIDENTAL TO THE BID ITEM "SUBSTRUCTURE CONCRETE".

FRACTURED FIN SURFACE TREATMENT DETAIL

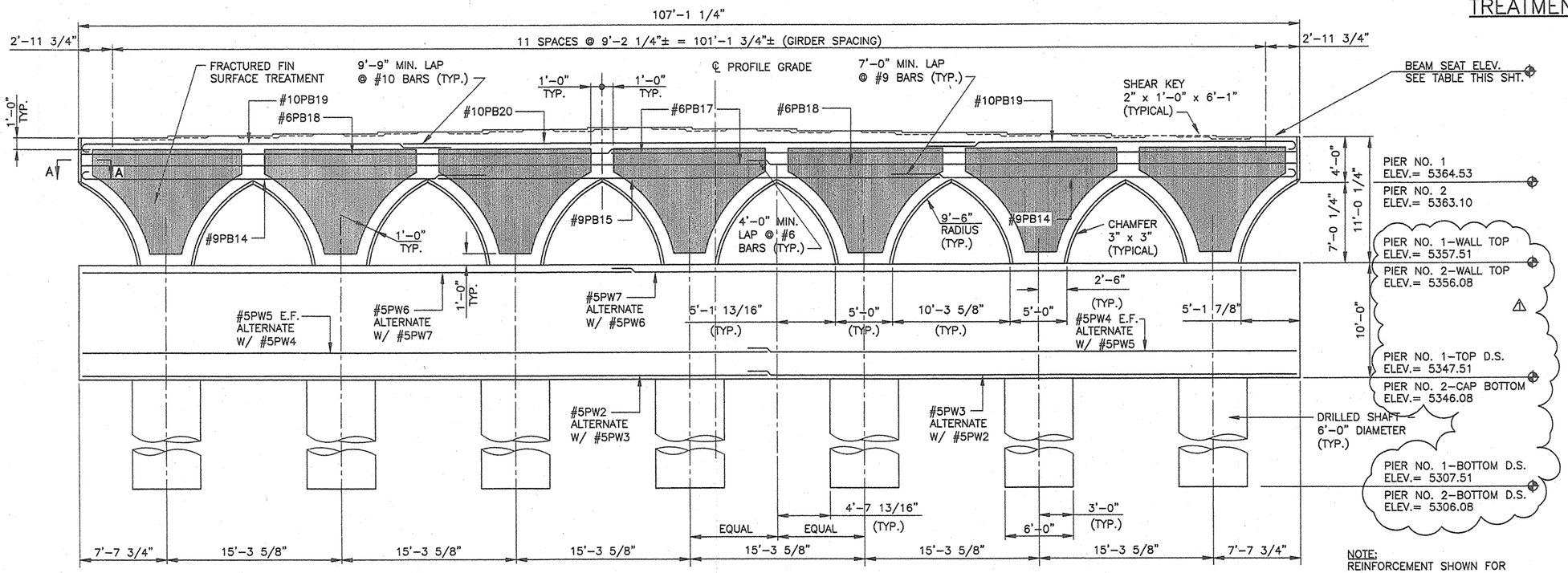

PIER ELEVATION

SCALE: 1:60

NOTE:
REINFORCEMENT SHOWN FOR LAP LOCATIONS ONLY. SEE SHEET 5-22 FOR TYPICAL REINFORCEMENT LAYOUT.

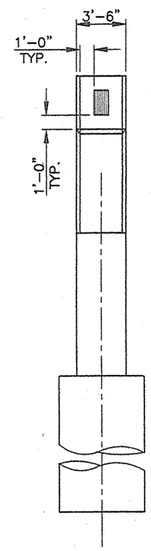

PIER END ELEVATION

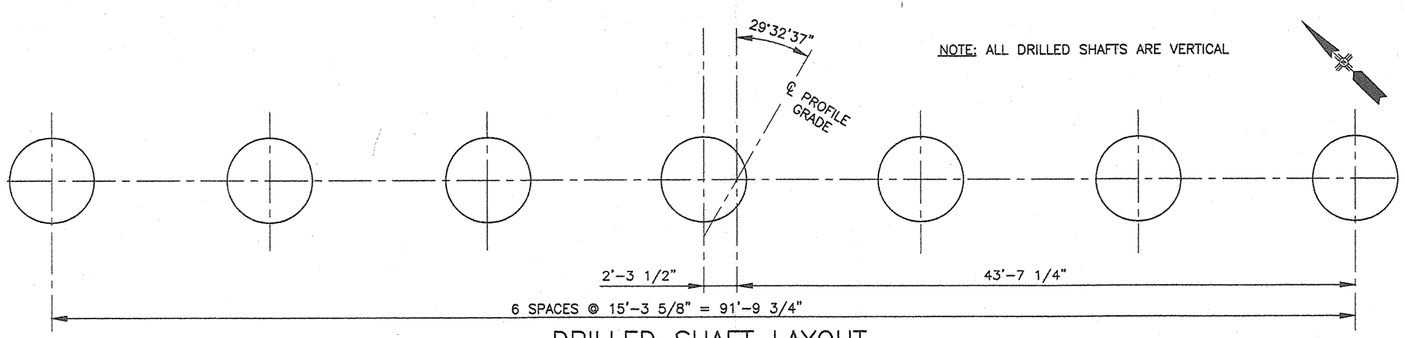

NOTE: ALL DRILLED SHAFTS ARE VERTICAL

DRILLED SHAFT LAYOUT

SCALE: 1:60

GIRDER	PIER 1	PIER 2
1	5369.06	5367.63
2	5369.16	5367.73
3	5369.27	5367.84
4	5369.37	5367.94
5	5369.48	5368.05
6	5369.58	5368.15
7	5369.61	5368.18
8	5369.39	5367.96
9	5369.18	5367.74
10	5368.96	5367.53
11	5368.75	5367.31
12	5368.53	5367.10

BEAM SEAT ELEVATIONS

AS-BUILT INFORMATION
CONTRACTOR David Romero Const. Inc
WORK STAKED BY Wilkesley Eng. DATE
WORK CHECKED BY COA DATE
ACCEPTANCE BY
FIELD VERIFICATION BY WCL DATE 3/03
DRAWINGS CORRECTED BY DATE
MICRO-FILM INFORMATION
RECORDED BY DATE
NO.

BENCH MARKS
THE STA. IS A USGS TABLET STAMPED "BLACK-2 1977" SET FLUSH W/ THE GROUND. THE STA. IS LOCATED 8.5 MI. N.W. OF DOWNTOWN ALBUQ. TO REACH THE STA. FROM THE INTX. OF COORS/I-40 GO N. ON COORS 5.8 MI. TO PARADISE BLVD. TURN LEFT GO W. ON PARADISE BLVD. 1.1 MI. TO GOLF COURSE RD. TURN RIGHT GO N. ON GOLF COURSE RD. 1.3 MI. TO McMAHON BLVD. THE STA. IS ON THE LEFT.
ELEVATION = 5213.926 FT. (2ND ORDER) (NGVD29)

SURVEY INFORMATION
FIELD NOTES
NO. | BY | DATE

ENGINEER'S SEAL
GARY W. KINCHEN NEW MEXICO 14368 Registered Professional Engineer
OCTOBER 28, 2005

NO.	DATE	REVISIONS	BY
1	MAY '06	PIER ELEVATIONS REMARKS	CRH

WILSON & COMPANY, ENGINEERS & ARCHITECTS
DESIGNED BY GWK DATE OCT 2005
DRAWN BY CRH DATE OCT 2005
CHECKED BY SFP DATE OCT 2005

CITY OF ALBUQUERQUE
DEPARTMENT OF MUNICIPAL DEVELOPMENT
TRANSPORTATION DIVISION

McMAHON BLVD. EXTENSION – LAS CALABACILLAS BRIDGE
PIER DETAILS

Design Review Committee | City Engineer Approval | Last Design Update | Mo./Day/Yr. | Mo./Day/Yr.

City Project No. COA 681602 | Zone Map No. A-10-Z | Sheet 5-21 Of

WILSON & COMPANY

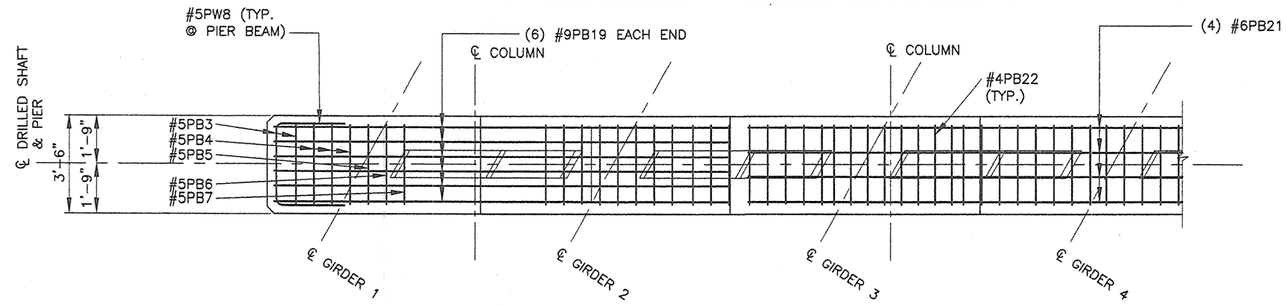

PIER PLAN @ BEARING CAP

SCALE: 3/8" = 1'-0"

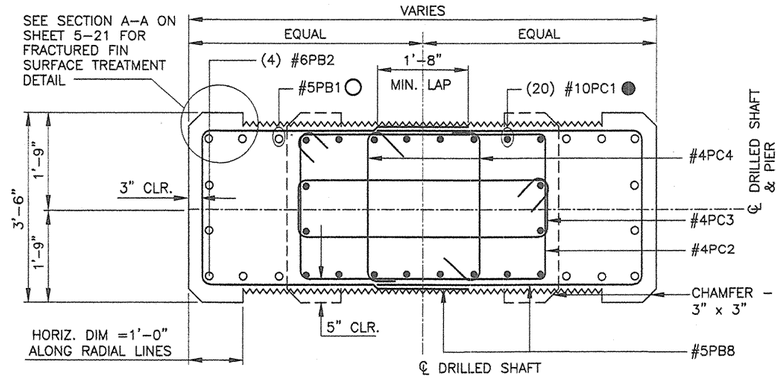

SECTION D-D

SCALE: 3/4" = 1'-0"

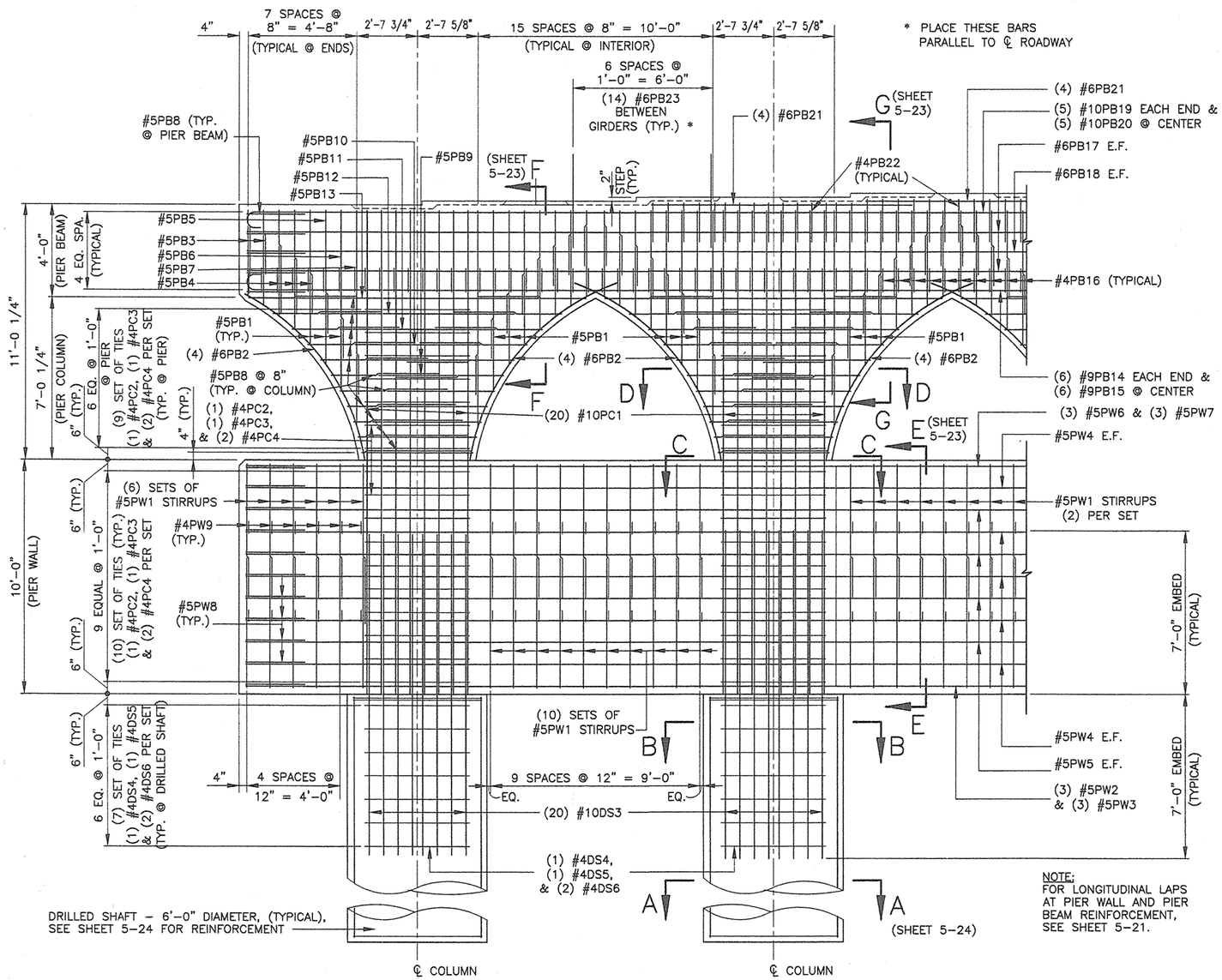

NOTE:
FOR LONGITUDINAL LAPS AT PIER WALL AND PIER BEAM REINFORCEMENT, SEE SHEET 5-21.

PIER REINFORCING ELEVATION

SCALE: 3/8" = 1'-0"

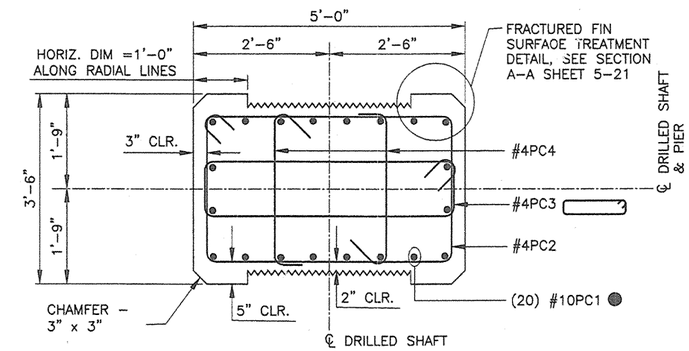

SECTION C-C

SCALE: 3/4" = 1'-0"

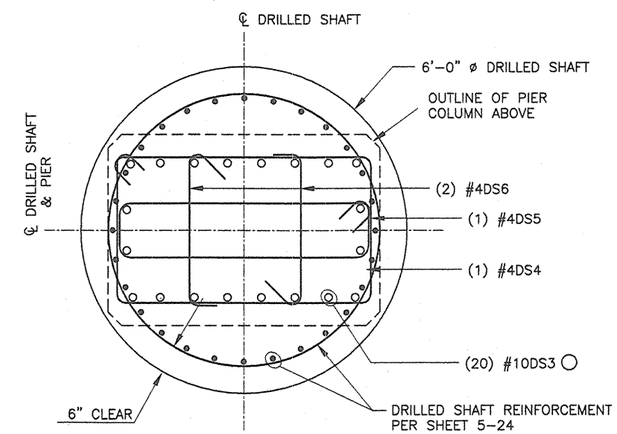

SECTION B-B

SCALE: 3/4" = 1'-0"

AS-BUILT INFORMATION	
CONTRACTOR	David Martinez Const. Inc.
WORK STAKED BY	Ballinger Eng.
INSPECTOR'S ACCEPTANCE BY	COA
FIELD DRAWINGS REVIEWED BY	COA/WCL
CORRECTED BY	WCL DATE 3/03
MICRO-FILM INFORMATION	
RECORDED BY	DATE
NO.	

BENCH MARKS

THE STA. IS A USGS TABLET STAMPED "BLACK-2 1977" SET FLUSH W/ THE GROUND. THE STA. IS LOCATED 8.5 MI. N.W. OF DOWNTOWN ALBUQ. TO REACH THE STA. FROM THE INTX OF COORS/I-40 GO N. ON COORS 5.8 MI. TO PARADISE BLVD. TURN LEFT GO W. ON PARADISE BLVD. 1.1 MI. TO GOLF COURSE RD. TURN RIGHT GO N. ON GOLF COURSE RD. 1.3 MI. TO McMAHON BLVD. THE STA. IS ON THE LEFT.

ELEVATION = 5213.926 FT. (2ND ORDER) (NGVD29)

SURVEY INFORMATION

FIELD NOTES

NO.	BY	DATE

ENGINEER'S SEAL

GARY W. KIRCHNER, NEW MEXICO, 14368, REGISTERED PROFESSIONAL ENGINEER, OCTOBER 28, 2005

NO.	DATE	REMARKS	BY

REVISIONS

WILSON & COMPANY, ENGINEERS & ARCHITECTS

		DATE
DESIGNED BY	GWK	OCT 2005
DRAWN BY	CRH	OCT 2005
CHECKED BY	SFP	OCT 2005

CITY OF ALBUQUERQUE
DEPARTMENT OF MUNICIPAL DEVELOPMENT
TRANSPORTATION DIVISION

McMAHON BLVD. EXTENSION - LAS CALABACILLAS BRIDGE

PIER DETAILS

Design Review Committee: PROVED NOV 17 2005 DESIGN REVIEW COMMITTEE

City Engineer Approval: PROVED NOV 17 2005 CITY ENGINEER

Last Design Update | Mo./Day/Yr. | Mo./Day/Yr.

City Project No.	Zone Map No.	Sheet	Of
COA 681602	A-10-Z	5-22	

WILSON & COMPANY

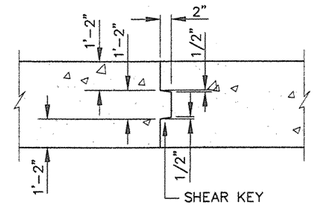

PIER CURTAINWALL CONSTRUCTION JOINT

NOT TO SCALE

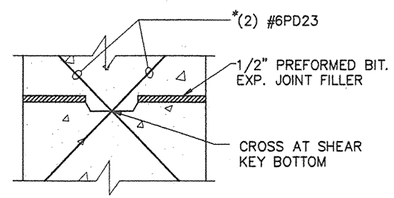

DETAIL "B" CROSS STIRRUPS

NOT TO SCALE

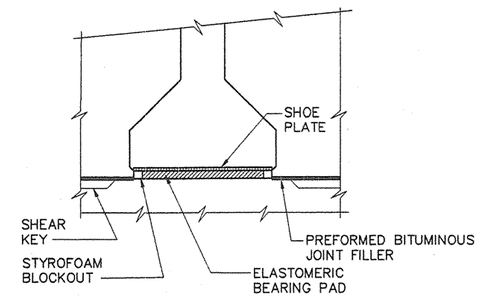

DETAIL "A" INSPECTION ACCESS

NOT TO SCALE

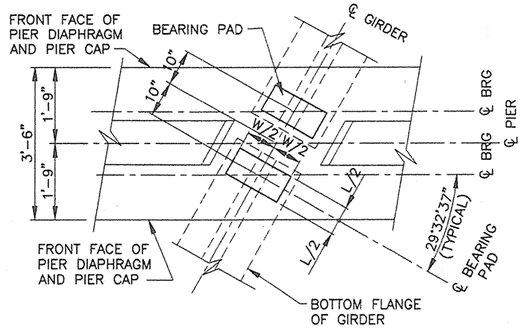

BEARING PAD LAYOUT PLAN @ PIER

SCALE 1:20

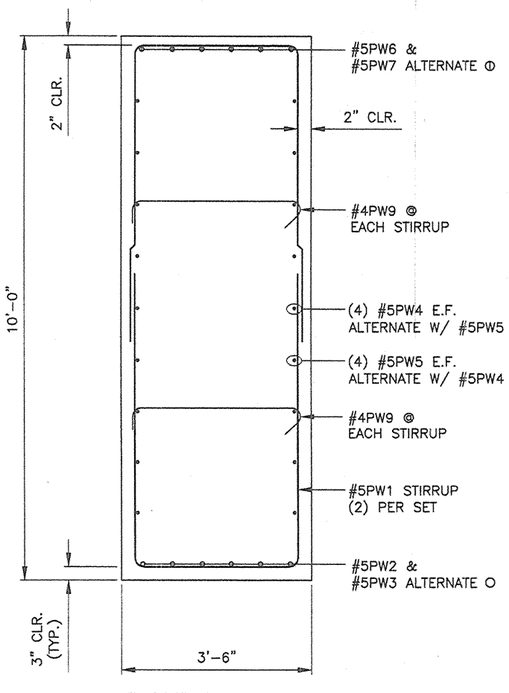

SECTION E–E

SCALE: 3/4" = 1'-0"

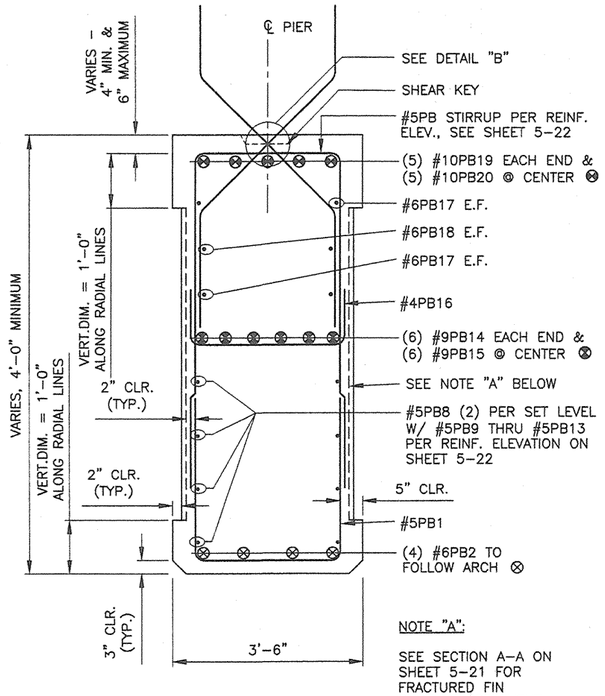

NOTE "A":

SEE SECTION A–A ON SHEET 5–21 FOR FRACTURED FIN SURFACE TREATMENT DETAIL

SECTION F–F

SCALE: 3/4" = 1'-0"

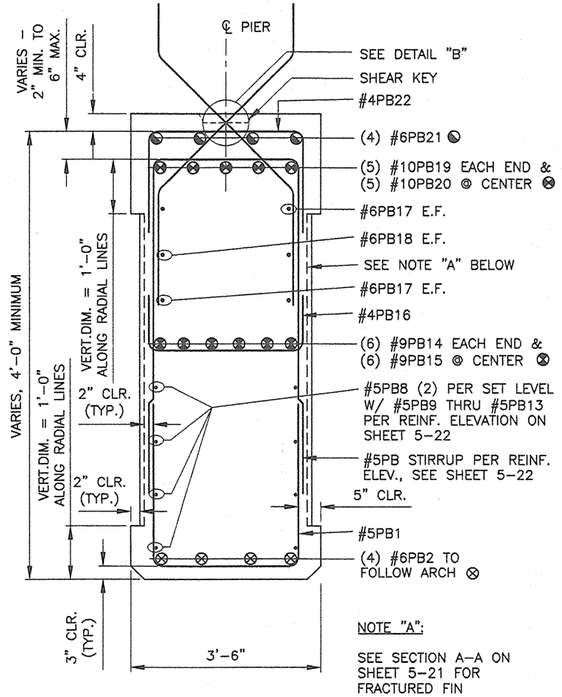

NOTE "A":

SEE SECTION A–A ON SHEET 5–21 FOR FRACTURED FIN SURFACE TREATMENT DETAIL

SECTION G–G

SCALE: 3/4" = 1'-0"

AS-BUILT INFORMATION

CONTRACTOR: David Martinez Const. Inc.
STAMP BY: Gallingsley Engr. DATE
INSPECTOR'S ACCEPTANCE BY: COA DATE
FIELD VERIFICATION BY: COA/WCL DATE
DRAWINGS CORRECTED BY: WCL DATE 3/03
MICRO-FILM INFORMATION
RECORDED BY DATE
NO.

BENCH MARKS

THE STA. IS A USGS TABLET STAMPED 'BLACK–2 1977' SET FLUSH W/ THE GROUND. THE STA. IS LOCATED 8.5 MI. N.W. OF DOWNTOWN ALBUQ. TO REACH THE STA. FROM THE INTX OF COORS/–40 GO N. ON COORS 5.8 MI. TO PARADISE BLVD. TURN LEFT GO W. ON PARADISE BLVD. 1.1 MI. TO GOLF COURSE RD. TURN RIGHT GO N. ON GOLF COURSE RD. 1.3 MI. TO McMAHON BLVD. THE STA. IS ON THE LEFT.

ELEVATION = 5213.926 FT. (2ND ORDER) (NGVD29)

SURVEY INFORMATION

FIELD NOTES

NO.	BY	DATE

ENGINEER'S SEAL

GARY W. KINCHEN, NEW MEXICO, 14366, REGISTERED PROFESSIONAL ENGINEER
OCTOBER 28, 2005

REVISIONS

NO.	DATE	REMARKS	BY

WILSON & COMPANY, ENGINEERS & ARCHITECTS

DESIGNED BY	GWK	DATE OCT 2005
DRAWN BY	CRH	DATE OCT 2005
CHECKED BY	SFP	DATE OCT 2005

CITY OF ALBUQUERQUE
DEPARTMENT OF MUNICIPAL DEVELOPMENT
TRANSPORTATION DIVISION

McMAHON BLVD. EXTENSION – LAS CALABACILLAS BRIDGE

PIER DETAILS

Design Review Committee: APPROVED NOV 17 2005 DESIGN REVIEW COMMITTEE

City Engineer Approval: APPROVED NOV 17 2005 CITY ENGINEER

Last Design Update | Mo./Day/Yr. | Mo./Day/Yr.

City Project No.	Zone Map No.	Sheet	Of
COA 681602	A–10–Z	5–23	

WILSON & COMPANY

SEE SHEET 5-4 FOR FOUNDATION NOTES

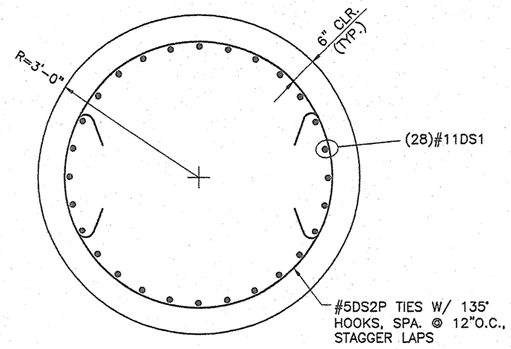

SECTION A–A
SCALE 1:20

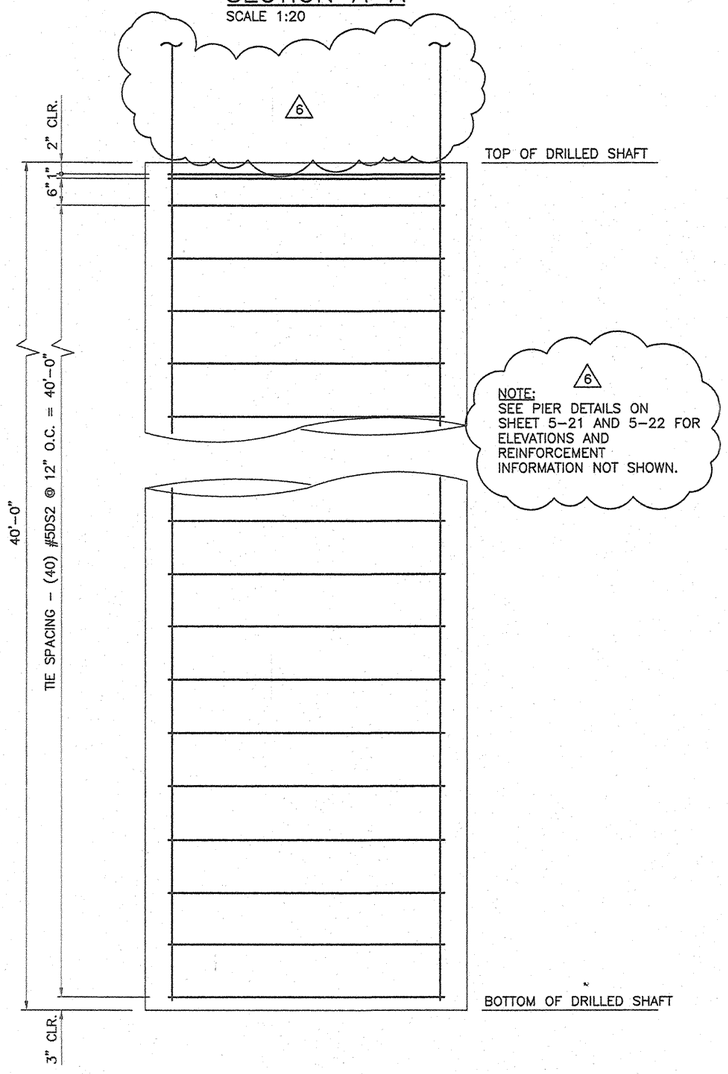

DRILLED SHAFT – 6'-0" DIAMETER
SCALE 3/4" = 1'-0"

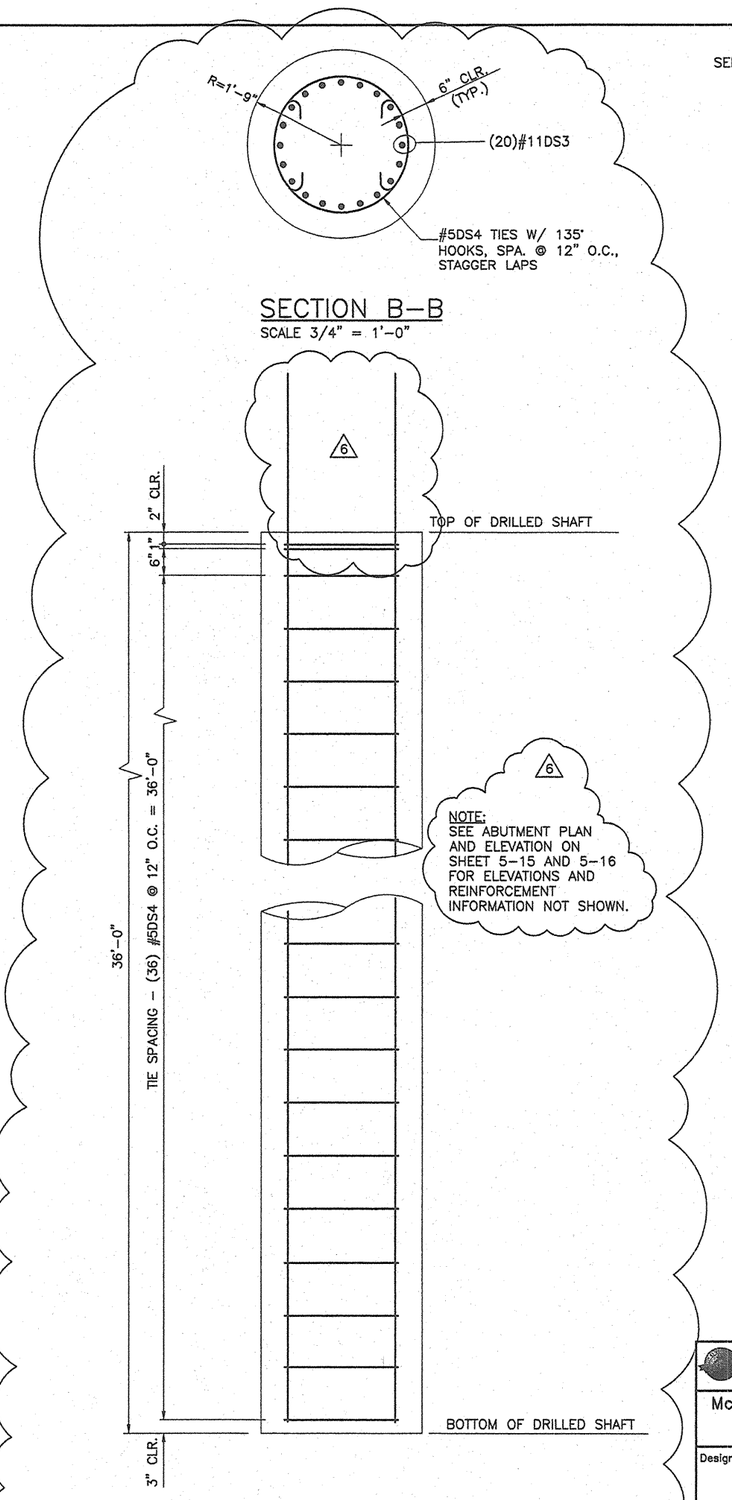

SECTION B–B
SCALE 3/4" = 1'-0"

1 DRILLED SHAFT – 3'-6" DIAMETER
SCALE 3/4" = 1'-0"

AS-BUILT INFORMATION
CONTRACTOR: David Nunnley Const. Inc.
STAKED BY: Bittingsley Eng. DATE
INSPECTORS ACCEPTANCE BY: COA DATE
FIELD VERIFICATION BY: CORJ WCL DATE 3/07
DRAWINGS CORRECTED BY: WCL
RECORDED BY: MICRO-FILM INFORMATION DATE
NO. DATE

BENCH MARKS
THE STA. IS A USGS TABLET STAMPED 'BLACK-2 1977' SET FLUSH W/ THE GROUND. THE STA. IS LOCATED 8.5 MI. N.W. OF DOWNTOWN ALBUQ. TO REACH THE STA. FROM THE INTX. OF COORS/I-40 GO N. ON COORS 5.8 MI. TO PARADISE BLVD. TURN LEFT GO W. ON PARADISE BLVD. 1.1 MI. TO GOLF COURSE RD. TURN RIGHT GO N. ON GOLF COURSE RD. 1.3 MI. TO McMAHON BLVD. THE STA. IS ON THE LEFT.

ELEVATION = 5213.926 FT. (2ND ORDER) (NGVD29)

SURVEY INFORMATION
FIELD NOTES

NO.	BY	DATE

ENGINEER'S SEAL
GARY W. KINCHEN NEW MEXICO 14366 REGISTERED PROFESSIONAL ENGINEER
OCTOBER 28, 2005

REVISIONS

NO.	DATE	REMARKS	BY
6	6-16-06	REVISED DRILLED SHAFT REINF	CRH
1	2-1-06	REVISED DRILLED SHAFT DIAMETER	CRH

WILSON & COMPANY, ENGINEERS & ARCHITECTS

		DATE
DESIGNED BY	GWK	OCT 2005
DRAWN BY	CRH	OCT 2005
CHECKED BY	SFP	OCT 2005

CITY OF ALBUQUERQUE
DEPARTMENT OF MUNICIPAL DEVELOPMENT
TRANSPORTATION DIVISION

McMAHON BLVD. EXTENSION – LAS CALABACILLAS BRIDGE
DRILLED SHAFT DETAILS

Design Review Committee	City Engineer Approval	Last Design Update	Mo./Day/Yr.	Mo./Day/Yr.

City Project No.	Zone Map No.	Sheet	Of
COA 681602	A-10-Z	5-24	

WILSON & COMPANY

SUPERSTRUCTURE

MARK	SIZE	NO. REQ'D	LENGTH	TYPE	REMARKS	QUAN.
#5T 1	5	65	1'- 6" TO 57'- 11"	STR.	AVG LENGTH = 29'- 8 1/2" INCREMENT = 0'- 10 1/2"	2014
#5T 2	5	346	57'- 4"	STR.		20690
#5T 3	5	44	4'- 0" TO 41'- 4"	STR.	AVG LENGTH = 22'- 8" INCREMENT = 0'- 10 1/2"	1040
#5T 4	5	346	41'- 4"	STR.		14916
#5T 5	5	44	7'- 8" TO 45'- 4"	STR.	AVG LENGTH = 26'- 6" INCREMENT = 0'- 10 1/2"	1216
#5T 6	5	65	1'- 4" TO 57'- 11"	STR.	AVG LENGTH = 29'- 7 1/2" INCREMENT = 0'- 10 1/2"	2008
#4TL 1	4	194	25'- 8"	STR.		3326
#4TL 2	4	388	42'- 6"	STR.		11015
#9TL 3	9	194	44'- 9"	STR.		29517
#9TL 4	9	194	58'- 3"	STR.		38422
#5B 1	5	65	1'- 11" TO 58'- 4"	STR.	AVG LENGTH = 30'- 1 1/2" INCREMENT = 0'- 10 1/2"	2042
#5B 2	5	346	45'- 4"	STR.		16360
#5B 3	5	44	4'- 5" TO 41'- 4"	STR.	AVG LENGTH = 22'- 10 1/2" INCREMENT = 0'- 10 1/4"	1050
#5B 4	5	346	53'- 4"	STR.		19247
#5B 5	5	44	7'- 5" TO 45'- 2"	STR.	AVG LENGTH = 26'- 3 1/2" INCREMENT = 0'- 10 1/2"	1207
#5B 6	5	65	1'- 0" TO 57'- 6"	STR.	AVG LENGTH = 29'- 3" INCREMENT = 0'- 10 1/2"	1983
#4BL 1	4	122	36'- 10"	STR.		3002
#4BL 2	4	244	60'- 0"	STR.		9780
#4BL 3	4	122	53'- 4"	STR.		4346
TOTAL EPOXY-COATED						183181

DIAPHRAGMS

MARK	SIZE	NO. REQ'D	LENGTH	TYPE	REMARKS	QUAN.
#4D 1	4	110	17'- 5"	2	a = 3'-9", b = 6'-1", c = 0'-9"	1280
#4D 2	4	88	10'- 3"	1	a = 3'-3", b = 3'-6"	603
#4D 3	4	44	5'- 3"	STR.		154
#4D 4	4	132	8'- 5"	STR.		742
TOTAL EPOXY-COATED						2779

MEDIAN

MARK	SIZE	NO. REQ'D	LENGTH	TYPE	REMARKS	QUAN.
#4M 1	4	238	1'- 5"	10	a = 0'-6", b = 0'-4", c = 0'-7"	225
#4M 2	4	60	60'- 0"	STR.		2405
#4M 3	4	119	14'- 0"	STR.		1113
#4M 4	4	238	1'- 2"	11	a = 0'-6", b = 0'-8"	185
TOTAL EPOXY-COATED						3928

ABUTMENTS

MARK	SIZE	NO. REQ'D	LENGTH	TYPE	REMARKS	QUAN.
#5A 1	5	440	8'- 9"	1	NON-EPOXY, a = 3'-3",b = 2'-9"	4016
#9A 2	9	24	56'- 6"	STR.	NON-EPOXY	4610
#4A 3	4	56	54'- 6"	STR.	NON-EPOXY	2039
#6A 4	6	176	7'- 1"	3	a=4'-7", b=1'-3"	1872
#9A 5	9	24	32'- 6"	STR.	NON-EPOXY	2652
#9A 6	9	12	57'- 6"	STR.	NON-EPOXY	2346
#6A 7	6	24	57'- 6"	STR.		2073
#6A 8	6	44	6'- 9"	STR.		446
#4A 9	4	376	10'- 9 1/2"	1	a=3'-5 1/2", b=3'-8"	2711
#6A 10	6	66	8'- 5"	STR.		834
#6A 11	6	24	57'- 6"	STR.		2073
#4A 12	4	218	4'- 1 3/4"	5	a=1'-6", b=0'-5 3/4", c=2'-2"	604
#4A 13	4	8	55'- 0"	STR.		294
#6A 14	6	22	5'- 5"	STR.		179
TOTAL NON-EPOXY-COATED (TOTAL IS FOR TWO ABUTMENTS)						15663
TOTAL EPOXY-COATED (TOTAL IS FOR TWO ABUTMENTS)						11086

APPROACH SLABS

MARK	SIZE	NO. REQ'D	LENGTH	TYPE	REMARKS	QUAN.
#4AS 1	4	30	52'- 2"	STR.		1045
#4AS 2	4	30	56'- 10"	STR.		1139
#5AS 3	5	30	52'- 4"	STR.		1638
#5AS 4	5	30	57'- 0"	STR.		1784
#4AS 5	4	248	13'- 7"	STR.		2250
#8AS 6	8	248	13'- 7"	STR.		8994
#4AS 7	4	4	52'- 3"	STR.		140
#4AS 8	4	4	56'- 10"	STR.		152
#4AS 9	4	20	52'- 3"	STR.		698
#4AS 10	4	20	56'- 10"	STR.		759
#4AS 11	4	190	3'- 8"	1	a = 0'-7", b = 1'-6 1/2"	465
#4AS 12	4	190	7'- 7"	1	a = 0'-7", b = 3'-6"	962
#6AS 13	6	218	3'- 0"	STR.		982
TOTAL EPOXY-COATED (TOTAL IS FOR TWO APPROACH SLABS)						21008

NOTE: ALL BARS ARE EPOXY COATED UNLESS NOTED OTHERWISE.

PIERS

MARK	SIZE	NO. REQ'D	LENGTH	TYPE	REMARKS	QUAN.
#10DS 3	10	280	14'- 0"	STR.	NON-EPOXY	16868
#4DS 4	4	98	14'- 10"	6	NON-EPOXY, a = 4'-6", b = 2'-8", c = 0'-3"	971
#4DS 5	4	98	11'- 6"	6	NON-EPOXY, a = 4'-6", b = 1'-0", c = 0'-3"	753
#4DS 6	4	196	3'- 6 1/2"	12	NON-EPOXY, a = 2'-8", b = 6", c = 4 1/2"	464
#5PW 1	5	288	14'- 7"	1	NON-EPOXY, a = 3'-3", b = 5'-8"	2806
#5PW 2	5	12	60'- 0"	STR.	NON-EPOXY	751
#5PW 3	5	12	48'- 0"	STR.	NON-EPOXY	601
#5PW 4	5	36	60'- 0"	STR.	NON-EPOXY	2253
#5PW 5	5	36	48'- 0"	STR.	NON-EPOXY	1802
#5PW 6	5	12	60'- 0"	STR.	NON-EPOXY	751
#5PW 7	5	12	48'- 0"	STR.	NON-EPOXY	601
#5PW 8	5	44	7'- 7"	1	NON-EPOXY, a = 3'-3", b = 2'-2"	348
#4PW 9	4	288	4'- 3"	12	NON-EPOXY, a = 3'-3", b = 6", c = 6"	818
#10PC 1	10	280	20'- 9"	STR.	NON-EPOXY	25000
#4PC 2	4	266	14'- 10"	6	NON-EPOXY, a = 4'-6", b = 2'-8", c = 0'-3"	2636
#4PC 3	4	266	11'- 6"	6	NON-EPOXY, a = 4'-6", b = 1'-0", c = 0'-3"	2043
#4PC 4	4	532	3'- 6 1/2"	12	NON-EPOXY, a = 2'-8", b = 6", c = 4 1/2"	1259
#5PB 1	5	224	8'- 8"	1	NON-EPOXY, a = 2'-8", b = 3'-0"	2025
#6PB 2	6	112	10'- 6"	13	NON-EPOXY	1766
#5PB 3	5	56	8'- 4"	1	NON-EPOXY, a = 2'-8, b = 2'-10"	487
#5PB 4	5	84	11'- 6"	1	NON-EPOXY, a = 2'-8, b = 4'-5"	1008
#5PB 5	5	28	13'- 4"	1	NON-EPOXY, a = 2'-8, b = 5'-4"	389
#5PB 6	5	28	15'- 6"	1	NON-EPOXY, a = 2'-8, b = 6'-5"	453
#5PB 7	5	28	18'- 8"	1	NON-EPOXY, a = 2'-8, b = 8'-0"	545
#5PB 8	5	328	11'- 8"	1	NON-EPOXY, a = 2'-8", b = 4'-6"	3991
#5PB 9	5	56	4'- 4"	STR.	NON-EPOXY	253
#5PB 10	5	28	5'- 5"	STR.	NON-EPOXY	158
#5PB 11	5	28	6'- 9"	STR.	NON-EPOXY	197
#5PB 12	5	28	8'- 4"	STR.	NON-EPOXY	243
#5PB 13	5	28	10'- 6"	STR.	NON-EPOXY	307
#9PB 14	9	24	39'- 3"	4	NON-EPOXY, a = 38'-0", b = 1'-3"	3203
#9PB 15	9	12	45'- 0"	STR.	NON-EPOXY	1836
#4PB 16	4	336	4'- 8"	1	NON-EPOXY, a = 2'-8", b = 1'-0"	1047
#6PB 17	6	16	60'- 0"	STR.	NON-EPOXY	1442
#6PB 18	6	8	50'- 9"	STR.	NON-EPOXY	610
#10PB 19	10	20	39'- 6"	4	NON-EPOXY, a = 38'-3", b = 1'-3"	3399
#10PB 20	10	10	50'- 0"	STR.	NON-EPOXY	2152
#6PB 21	6	64	11'- 8"	STR.	NON-EPOXY	1121
#4PB 22	4	228	7'- 0"	1	NON-EPOXY,a=2'-8", b=2'-2"	1066
#6PB 23	6	336	8'- 1"	3	a=4'-1", b=2'-0"	4079
TOTAL NON-EPOXY-COATED (TOTAL IS FOR TWO PIERS)						69367
TOTAL EPOXY-COATED (TOTAL IS FOR TWO ABUTMENTS)						4079

WINGWALLS (4 TOTAL)

MARK	SIZE	NO. REQ'D	LENGTH	TYPE	REMARKS	QUAN.
#4WH 1	4	4	20'- 4"	7	a = 16'-6", b = 3'-10"	54
#4WH 2	4	4	5'- 8"	STR.		15
#4WH 3	4	4	7'- 7"	STR.		20
#4WH 4	4	4	9'- 6"	STR.		25
#4WH 5	4	4	11'- 6"	STR.		31
#4WH 6	4	4	13'- 5"	STR.		36
#4WH 7	4	4	15'- 4"	STR.		41
#4WH 8	4	4	17'- 3"	STR.		46
#4WH 9	4	4	19'- 2 1/2"	STR.		51
#4HW 10	4	4	20'- 3"	STR.		54
#4WH 11	4	4	20'- 4 3/4"	STR.		54
#4WH 12	4	4	20'- 6 1/2"	STR.		55
#6WH 13	6	8	20'- 8"	STR.		248
#6WH 14	6	4	20'- 4"	7	a = 16'-6", b = 3'-10"	122
#6WH 15	6	4	5'- 8"	STR.		34
#6WH 16	6	4	7'- 7"	STR.		46
#6WH 17	6	4	9'- 6"	STR.		57
#6WH 18	6	4	11'- 6"	STR.		69
#6WH 19	6	4	13'- 5"	STR.		81
#6WH 20	6	4	15'- 4"	STR.		92
#6WH 21	6	4	17'- 3"	STR.		104
#6WH 22	6	4	19'- 2 1/2"	STR.		115
#6WH 23	6	4	20'- 3"	STR.		122
#6WH 24	6	4	20'- 4 3/4"	STR.		123
#6WH 25	6	4	20'- 6 1/2"	STR.		123
#4WH 26	4	12	7'- 5"	10	a = 2'-0", b = 3'-5", c = 2'-0"	59
#4WH 27	4	6	5'- 8"	8	a = 3'-8, b = 2'-0"	23
#4WH 28	4	6	5'- 8"	9	a = 3'-8, b = 2'-0"	23
#4WV 1	4	8	2'- 7"	STR.		14
#4WV 2	4	8	2'- 11 1/4"	STR.		16
#4WV 3	4	8	3'- 4 3/4"	STR.		18
#4WV 4	4	8	3'- 10 1/2"	STR.		21
#4WV 5	4	8	4'- 4 1/4"	STR.		23
#4WV 6	4	8	4'- 9 3/4"	STR.		26
#4WV 7	4	8	5'- 3 1/2"	STR.		28
#4WV 8	4	8	5'- 9"	STR.		31
#4WV 9	4	8	6'- 2 3/4"	STR.		33
#4WV 10	4	8	6'- 8 1/2"	STR.		36
#4WV 11	4	8	7'- 2"	STR.		38
#4WV 12	4	8	7'- 7 3/4"	STR.		41
#4WV 13	4	8	8'- 1 1/2"	STR.		43
#4WV 14	4	8	8'- 7"	STR.		46
#4WV 15	4	8	9'- 0 3/4"	STR.		48
#4WV 16	4	8	9'- 6 1/2"	STR.		51
#4WV 17	4	32	9'- 8"	STR.		207
#4WV 18	4	8	6'- 5 3/4"	STR.		35
#4WV 19	4	8	3'- 1 1/2"	STR.		17
#4WV 20	4	8	9'- 10 1/4"	STR.		53
TOTAL EPOXY-COATED						2748

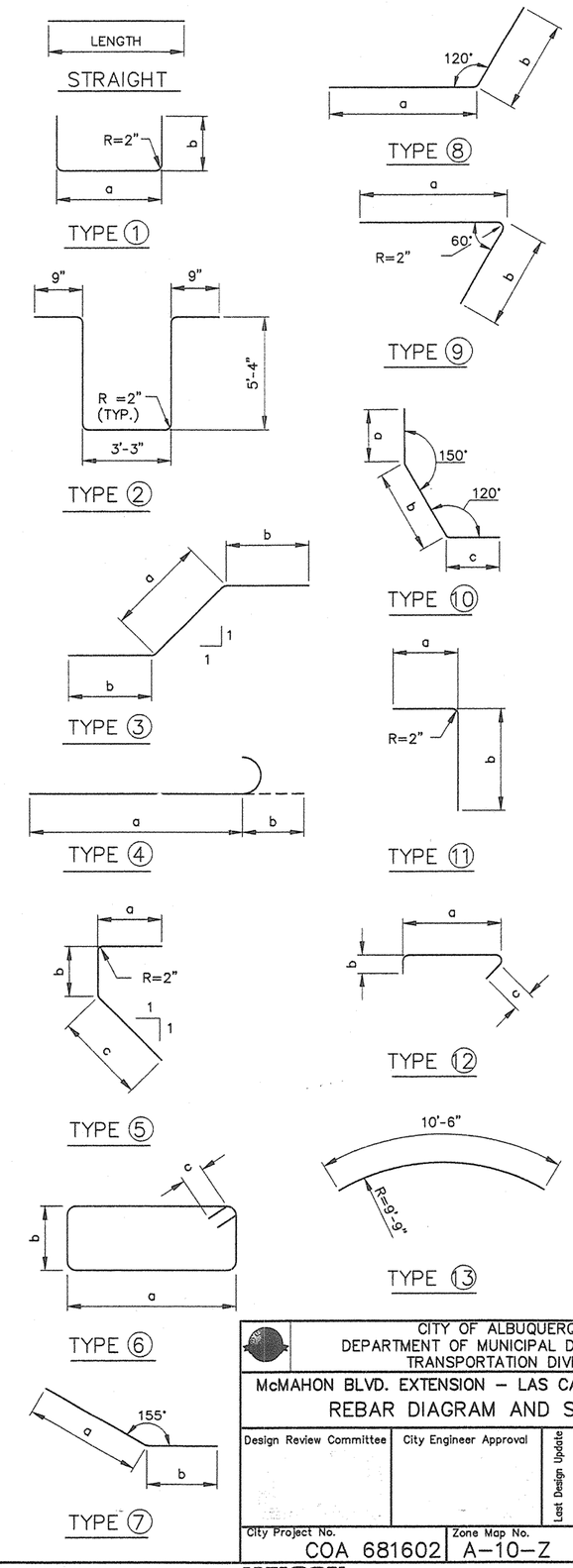

AS-BUILT INFORMATION
CONTRACTOR David Martinez Const. Inc. DATE
WORK STAKED BY Billingsley Engr. DATE
INSPECTOR'S ACCEPTANCE BY COA DATE
FIELD DOCUMENTATION BY COA/WC DATE
DRAWINGS CORRECTED BY WC DATE 3/07
RECORDED BY MICRO-FILM INFORMATION DATE
NO.

BENCH MARKS
THE STA. IS A USGS TABLET STAMPED "BLACK-2 1977" SET FLUSH W/ THE GROUND. THE STA. IS LOCATED 8.5 MI. N.W. OF DOWNTOWN ALBUQ. TO REACH THE STA. FROM THE INTX OF COORS/I-40 GO N. ON COORS 5.8 MI. TO PARADISE BLVD. TURN LEFT GO W. ON PARADISE BLVD. 1.1 MI. TO GOLF COURSE RD. TURN RIGHT GO N. ON GOLF COURSE RD. 1.3 MI. TO McMAHON BLVD. THE STA. IS ON THE LEFT.
ELEVATION = 5213.926 FT. (2ND ORDER) (NGVD29)

SURVEY INFORMATION
FIELD NOTES

NO.	BY	DATE

ENGINEER'S SEAL
GARY W. KIRCHEN NEW MEXICO 14366 PROFESSIONAL ENGINEER
OCTOBER 28, 2005

NO.	DATE	REMARKS	BY

REVISIONS

WILSON & COMPANY, ENGINEERS & ARCHITECTS
DESIGNED BY GMK DATE OCT 2005
DRAWN BY CRH DATE OCT 2005
CHECKED BY SFP DATE OCT 2005

CITY OF ALBUQUERQUE
DEPARTMENT OF MUNICIPAL DEVELOPMENT
TRANSPORTATION DIVISION

McMAHON BLVD. EXTENSION – LAS CALABACILLAS BRIDGE
REBAR DIAGRAM AND SCHEDULE

Design Review Committee	City Engineer Approval	Last Design Update	Mo./Day/Yr.	Mo./Day/Yr.

City Project No.	Zone Map No.	Sheet	Of
COA 681602	A-10-Z	5-25	

WILSON & COMPANY

TABLE OF ALLOWABLE MOVEMENT LENGTHS AND ACCEPTABLE JOINT SEALS

SKEW	MOVEMENT LENGTH (FEET)				MANUFACTURER				JOINT MOVEMENT (in.)	* "A" [DIMENSION @ MID TEMP T_0] (in.)
	CONCRETE BRIDGE		STEEL BRIDGE		WATSON–BOMAN AND ACME "STRIP SEAL" MODEL NO.	D.S. BROWN CO., INC. "STEELFLEX" MODEL NO.	STRUCTURAL ACCESSORIES INC. "ONFLEX" MODEL NO.	R.J.WATSON "STRIP SEAL" MODEL NO.		
	SEVERE CLIMATE (−10° TO 120° F) T_0 = 120° F	MODERATE CLIMATE (20° TO 120° F) T_0 = 70° F	SEVERE CLIMATE (−30° TO 120° F) T_0 = 45° F	MODERATE CLIMATE (0 TO 120° F) T_0 = 60° F						
0° to 15°	0–427	0–556	0–342	0–427	SE–400	SSA2	40SEQ	RJ–400	0 TO 4	2
15° to 30°	0–442	0–575	0–354	0–442	SE–400	SSA2	40SEQ	RJ–400	0 TO 4	2
30° to 45°	0–493	0–642	0–395	0–493	SE–400	SSA2	40SEQ	RJ–400	0 TO 4	2

* MAXIMUM "A" IS EQUAL TO TOTAL JOINT MOVEMENT

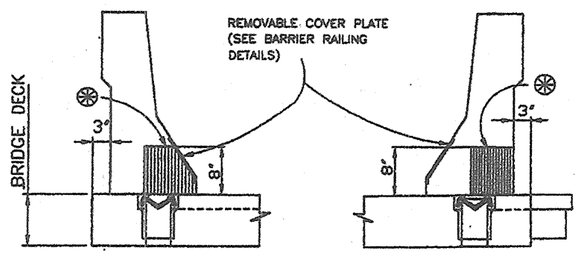

SECTION A–A SECTION B–B

SIMILAR DETAIL FOR CURB AND SIDEWALK.

⊛ RECESS IN BASE OF WALL BARRIER

SECTIONS
NOT TO SCALE

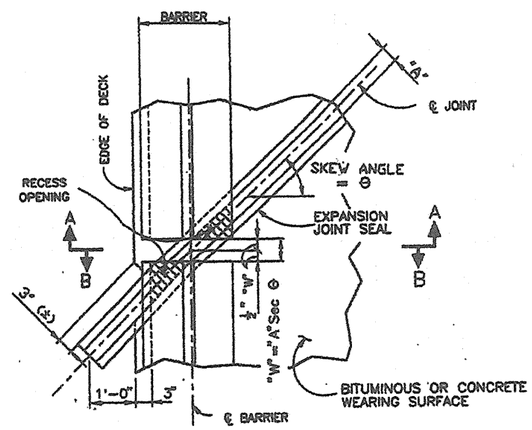

PARTIAL PLAN – SKEWED JOINT WITH CONCRETE BARRIER RAILING
NOT TO SCALE

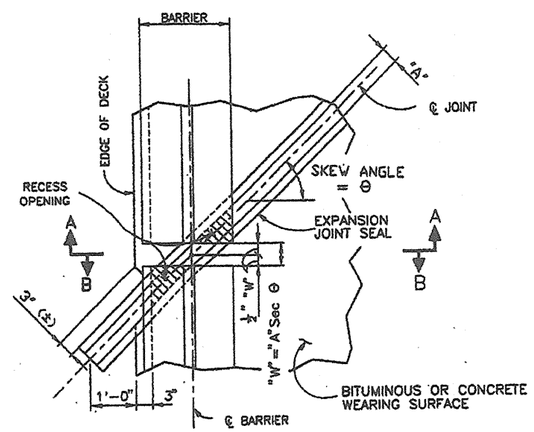

PARTIAL PLAN – SKEWED JOINT WITH METAL RAILING
NOT TO SCALE

GENERAL NOTES

1. INSTALL JOINT SEALS PER MANUFACTURER'S RECOMMENDATIONS. SEALS WITH EQUAL PERFORMANCE CHARACTERISTICS TO THOSE SHOWN MAY BE SUBSTITUTED WITH PROJECT ENGINEER'S PRIOR APPROVAL.

2. JOINT SEAL SIZES ARE BASED ON AN INSTALLATION TEMPERATURE OF "To" (°F, MIDPOINT TEMPERATURE) AND JOINT MOVEMENTS FOR A RANGE OF TEMPERATURES AS NOTED IN THE TABLE ON THIS SHEET. FOR INSTALLATION TEMPERATURES BELOW "To", INCREASE DIMENSION "A" BY THE AMOUNT SHOWN BELOW. FOR INSTALLATION TEMPERATURES ABOVE "To", DECREASE DIMENSION "A" BY THE AMOUNT SHOWN BELOW.

   FOR CONCRETE BRIDGES:

   CHANGE IN "A" = 0.000072 x L x cos θ x ΔT

   FOR STEEL BRIDGES:

   CHANGE IN "A" = 0.000078 x L x cos θ x ΔT

   WHERE:
   CHANGE IN "A" IS IN INCHES
   L = MOVEMENT LENGTH IN FEET (SEE SUPERSTRUCTURE DETAILS)
   Q = SKEW ANGLE
   ΔT = CHANGE IN TEMPERATURE FROM "To" °F.

   EXAMPLE: (CONCRETE BRIDGE IN SEVERE CLIMATE TO = 55°F)
   FOR T = 73 °F, L = 100 FT, θ = 28°
   CONCRETE BRIDGE, ΔT = 73°F – 55°F = 18°F
   CHANGE IN "A" = 0.000072 x 100 x 0.8829 x 18
   = 0.1144 INCHES; SAY 1/8 INCH.

3. UNLESS OTHERWISE SPECIFIED, INSTALL USING EITHER TYPE "A" OR TYPE "B" INSTALLATION.

4. UNLESS OTHERWISE SPECIFIED ON THE PLANS, CONSIDER ALL STRUCTURES SUBJECTED TO A SEVERE CLIMATE.

5. PROVIDE A PROTECTIVE COATING ON ALL STEEL COMPONENT SURFACES OF THE SEAL, EXCEPT FOR SURFACES IN CONTACT WITH ELASTOMERIC SEALING ELEMENTS. CONFORM TO SECTION 157 OF THE SPECIFICATIONS. IN LIEU OF PAINTING, HOT–DIP GALVANIZE ALL SEAL COMPONENTS PER AASHTO M–111.

AS–BUILT INFORMATION
CONTRACTOR David Martinez Const. Inc. DATE
WORK STAKED BY Billingsley Engr. DATE
INSPECTOR'S ACCEPTANCE BY COA DATE
FIELD VERIFICATION BY COA/WCL DATE 3/07
DRAWINGS CORRECTED BY WCL DATE 3/07
MICRO–FILM INFORMATION
RECORDED BY DATE
NO.

BENCH MARKS
THE STA. IS A USGS TABLET STAMPED "BLACK–2 1977" SET FLUSH W/ THE GROUND. THE STA. IS LOCATED 8.5 MI. N.W. OF DOWNTOWN ALBUQ. TO REACH THE STA. FROM THE INTX OF COORS/I–40 GO N. ON COORS 5.8 MI. TO PARADISE BLVD. TURN LEFT GO W. ON PARADISE BLVD. 1.1 MI. TO GOLF COURSE RD. TURN RIGHT GO N. ON GOLF COURSE RD. 1.3 MI. TO McMAHON BLVD. THE STA. IS ON THE LEFT.
ELEVATION = 5213.926 FT. (2ND ORDER) (NGVD29)

SURVEY INFORMATION
FIELD NOTES
NO. | BY | DATE

ENGINEER'S SEAL
GARY W. KINCHEN NEW MEXICO 14368 REGISTERED PROFESSIONAL ENGINEER
OCTOBER 28, 2005

NO.	DATE	REMARKS	BY
		REVISIONS	

WILSON & COMPANY, ENGINEERS & ARCHITECTS
DESIGNED BY GWK DATE OCT 2005
DRAWN BY CRH DATE OCT 2005
CHECKED BY SFP DATE OCT 2005

CITY OF ALBUQUERQUE
DEPARTMENT OF MUNICIPAL DEVELOPMENT
TRANSPORTATION DIVISION

McMAHON BLVD. EXTENSION – LAS CALABACILLAS BRIDGE

ELASTOMERIC EXPANSION JOINT SEAL, GENERAL DATA

Design Review Committee: APPROVED NOV 17 2005 DESIGN REVIEW COMMITTEE
City Engineer Approval: APPROVED NOV 17 2005 CITY ENGINEER
Last Design Update | Mo./Day/Yr. | Mo./Day/Yr.

City Project No. COA 681602 | Zone Map No. A–10–Z | Sheet 5 Of 26

WILSON & COMPANY

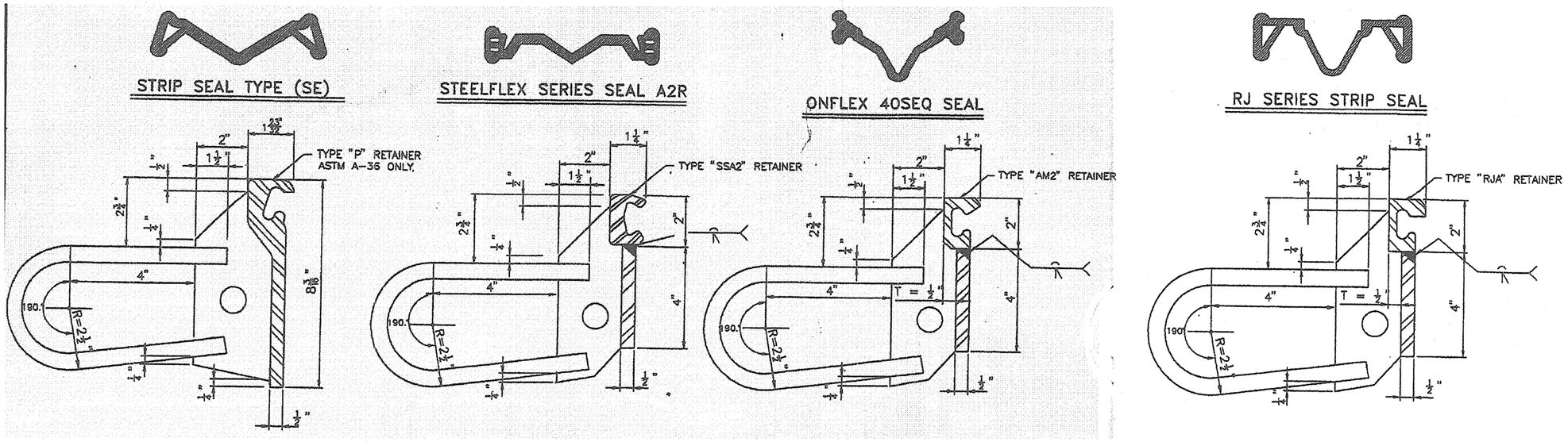

WATSON–BOWMAN & ACME
NOT TO SCALE

D. S. BROWN CO.
NOT TO SCALE

STRUCTURAL ACCESSORIES, INC.
NOT TO SCALE

R. J. WATSON
NOT TO SCALE

GENERAL NOTES

1. SEE SHEET 5–26 FOR APPROPRIATE MODEL NUMBERS AND DIMENSION "A".
2. ALTER THE ½" PLATE SLIGHTLY FROM THE DETAIL SHOWN AS NEEDED FOR FITTING THE STEEL RETAINER.
3. SECURE THE TEMPORARY SUPPORT ANGLE IN POSITION TO PROVDE FOR LATERAL AND VERTICAL ADJUSTMENT OF THE RETAINER BARS, AND FOR FINAL CONCRETE SURFACE FINISHING.
4. WATSON–BOWMAN & ACME SYSTEMS: NOTCH RETAINERS TO CLEAR THE BEAMS WHEN RETAINER DEPTH EXCEEDS THE BRIDGE DECK DEPTH.

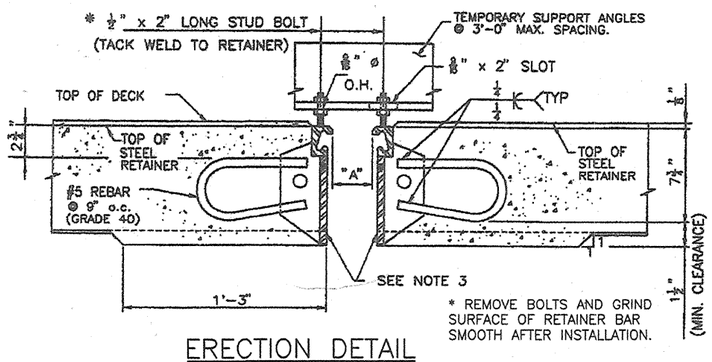

ERECTION DETAIL
NOT TO SCALE

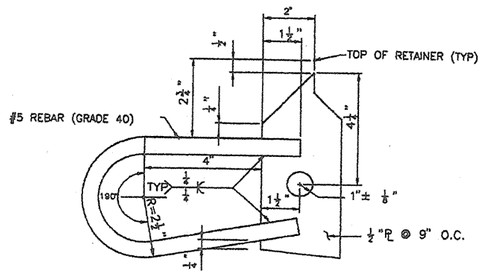

ANCHOR DETAIL
NOT TO SCALE

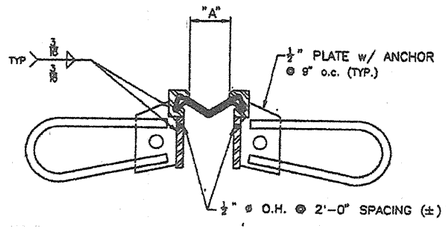

TYPICAL SECTION
NOT TO SCALE

AS-BUILT INFORMATION
CONTRACTOR David Montoya Const. Inc. DATE
WORK STAKED BY Billingsley Eng'r DATE
FIELD VERIFIED & ACCEPTANCE BY COA DATE
FIELD VERIFICATION BY COA/WCI DATE
DRAWINGS CORRECTED BY WCI DATE 3/07
RECORDED BY MICRO-FILM INFORMATION DATE
NO.

BENCH MARKS
THE STA. IS A USGS TABLET STAMPED "BLACK-2 1977" SET FLUSH W/ THE GROUND. THE STA. IS LOCATED 8.5 MI. N.W. OF DOWNTOWN ALBUQ. TO REACH THE STA. FROM THE INTX OF COORS/I-40 GO N. ON COORS 5.8 MI. TO PARADISE BLVD. TURN LEFT GO W. ON PARADISE BLVD. 1.1 MI. TO GOLF COURSE RD. TURN RIGHT GO N. ON GOLF COURSE RD 1.3 MI. TO McMAHON BLVD. THE STA. IS ON THE LEFT.
ELEVATION = 5213.926 FT. (2ND ORDER) (NGVD29)

SURVEY INFORMATION
FIELD NOTES
NO. | BY | DATE

ENGINEER'S SEAL
GARY W. KINCHEN NEW MEXICO 14366 REGISTERED PROFESSIONAL ENGINEER
OCTOBER 26, 2005

NO.	DATE	REMARKS	BY
		REVISIONS	

WILSON & COMPANY, ENGINEERS & ARCHITECTS
DESIGNED BY GWK DATE OCT 2005
DRAWN BY CRH DATE OCT 2005
CHECKED BY SFP DATE OCT 2005

CITY OF ALBUQUERQUE
DEPARTMENT OF MUNICIPAL DEVELOPMENT
TRANSPORTATION DIVISION

McMAHON BLVD. EXTENSION – LAS CALABACILLAS BRIDGE

ELASTOMERIC EXP. JOINT SEAL, TYPE "A" INSTALLATION

Design Review Committee: APPROVED NOV 17 2005 DESIGN REVIEW COMMITTEE
City Engineer Approval: APPROVED NOV 17 2005 CITY ENGINEER
Last Design Update | Mo./Day/Yr. | Mo./Day/Yr.

City Project No. COA 681602 | Zone Map No. A-10-Z | Sheet 5-27 Of

WILSON & COMPANY

TABLE 1 – LISTING OF JOINTS					
MANUFACTURER	TYPE OF JOINT	RETAINER BAR TYPE	DIM. "A"	DIM. "W" MIN.	DIM. "T" MIN.
WATSON–BOWMAN	STRIP SEAL	"A"	2"	12 7/16"	2 5/8"
D.S.BROWN	STEEL FLEX	"SSA2"	2"	13 1/16"	2 5/8"
STRUCTURAL ACCESS.	ONFLEX	"AM2"	2"	11 1/2"	2 5/8"
R.J.WATSON	STRIP SEAL	"RJA"	2"	11 1/2"	2 5/8"

GENERAL NOTES

1. TYPE B INSTALLATION CONSISTS OF A STEEL RETAINING BAR AND ANCHORAGE SYSTEM, ELASTOMERIC STRIP SEAL, AND ELASTOMETRIC CONCRETE END DAM. USE AN ANCHORAGE SYSTEM OF CONTINUOUS SINUSOIDAL TYPE, BENT STUD ANCHOR TYPE, OR APPROVED EQUAL.
2. SEE SHEETS 5–26 AND 5–27 FOR APPROPRIATE SEAL MODEL NUMERS AND DIMENSION "A".
3. FOR NEW CONSTRUCTION, AND BRIDGE DECK REPLACEMENTS, INSTALL NOSING MATERIALS AND SEAL ELEMENTS AFTER THE ENTIRE DECK ADJACENT TO THE JOINTS HAS BEEN PLACED AND ACHIEVED THE SPECIFIED DESIGN STRENGTH.
4. WHEN REPLACING OLDER BOLT–DOWN JOINT SEALS, THE DIMENSION "W" EQUALS THE LARGER OF THE OLD JOINT BLOCKOUT DIMENSIONS, OR THE MINIMUM DIMENSIONS SHOWN; PLUS ANY ADDITIONAL AMOUNTS NEEDED TO REPLACE SPALLED OR DETERIORATED CONCRETE AT THE EDGES OR UNDERNEATH THE OLD JOINT SEAL BLOCKOUT.

   THE PLANS WILL IDENTIFY ISOLATED AREAS THAT REQUIRE EVEN GREATER WIDTHS DUE TO DETERIORATED CONCRETE.

   FOR NEW CONCRETE WHERE A NOSING MATERIAL IS REQUIRED, THE PLANS WILL IDENTIFY DIMENSIONS "A", "W" AND "T" (MINIMUM SHOWN IN TABLE 1).

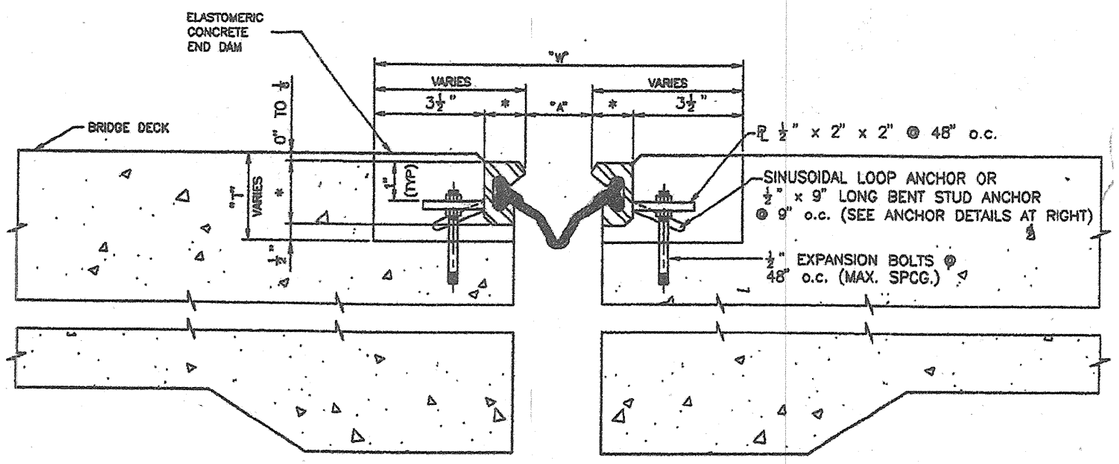

ERECTION DETAIL (ALTERNATE 1)

NOT TO SCALE

* DIMENSION OF RETAINER BAR VARIES WITH MANUFACTURER.

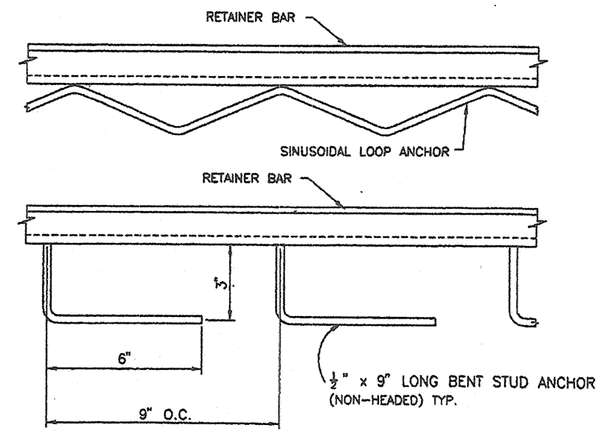

PERMISSIBLE ANCHOR DETAILS

NOT TO SCALE

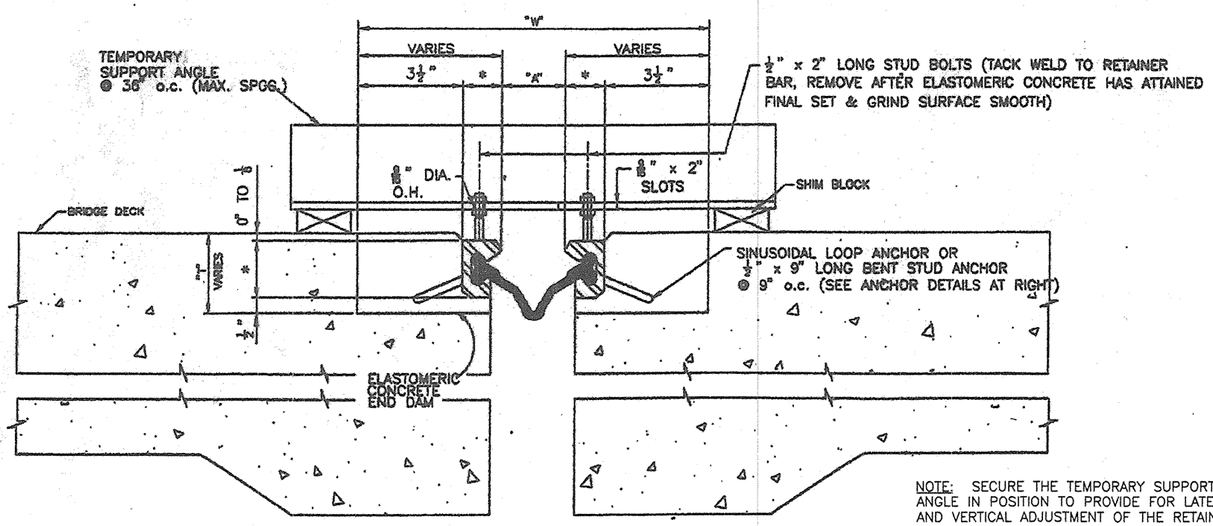

NOTE: SECURE THE TEMPORARY SUPPORT ANGLE IN POSITION TO PROVIDE FOR LATERAL AND VERTICAL ADJUSTMENT OF THE RETAINER BARS AND PERMIT FINAL FINISHING OF THE ELASTOMERIC CONCRETE SURFACE AS APPROVED BY THE PROJECT ENGINEER.

ERECTION DETAIL (ALTERNATE 1)

NOT TO SCALE

AS–BUILT INFORMATION
CONTRACTOR Donald Montoya Const. Inc. DATE
WORK STAKED BY Billingsley Engr. DATE
WORK STAKING VERIFIED BY COA DATE
FIELD VERIFICATION BY COA/WCI DATE
ACCEPTANCE BY WCI DATE 3/07
DRAWINGS CORRECTED BY WCI
MICRO–FILM INFORMATION
DATE
RECORDED BY
NO.

BENCH MARKS
THE STA. IS A USGS TABLET STAMPED "BLACK–2 1977" SET FLUSH W/ THE GROUND. THE STA. IS LOCATED 8.5 MI. N.W. OF DOWNTOWN ALBUQ. TO REACH THE STA. FROM THE INTX OF COORS/I–40 GO N. ON COORS 5.8 MI. TO PARADISE BLVD. TURN LEFT GO W. ON PARADISE BLVD. 1.1 MI. TO GOLF COURSE RD. TURN RIGHT GO N. ON GOLF COURSE RD. 1.3 MI. TO McMAHON BLVD. THE STA. IS ON THE LEFT.

ELEVATION = 5213.926 FT. (2ND ORDER) (NGVD29)

SURVEY INFORMATION
FIELD NOTES

NO.	BY	DATE

ENGINEER'S SEAL
GARY W. KINCHEN NEW MEXICO 14368 REGISTERED PROFESSIONAL ENGINEER
OCTOBER 28, 2005

REVISIONS

NO.	DATE	REMARKS	BY

WILSON & COMPANY, ENGINEERS & ARCHITECTS

		DATE
DESIGNED BY	GWK	OCT 2005
DRAWN BY	CRH	OCT 2005
CHECKED BY	SFP	OCT 2005

CITY OF ALBUQUERQUE
DEPARTMENT OF MUNICIPAL DEVELOPMENT
TRANSPORTATION DIVISION

McMAHON BLVD. EXTENSION – LAS CALABACILLAS BRIDGE

ELASTOMERIC EXP. JOINT SEAL, TYPE "B" INSTALLATION

Design Review Committee: APPROVED NOV 1 7 2005 DESIGN REVIEW COMMITTEE
City Engineer Approval: APPROVED NOV 1 7 2005 CITY ENGINEER
Last Design Update | Mo./Day/Yr. | Mo./Day/Yr.

City Project No.	Zone Map No.	Sheet	Of
COA 681602	A–10–Z	5–28	

WILSON & COMPANY

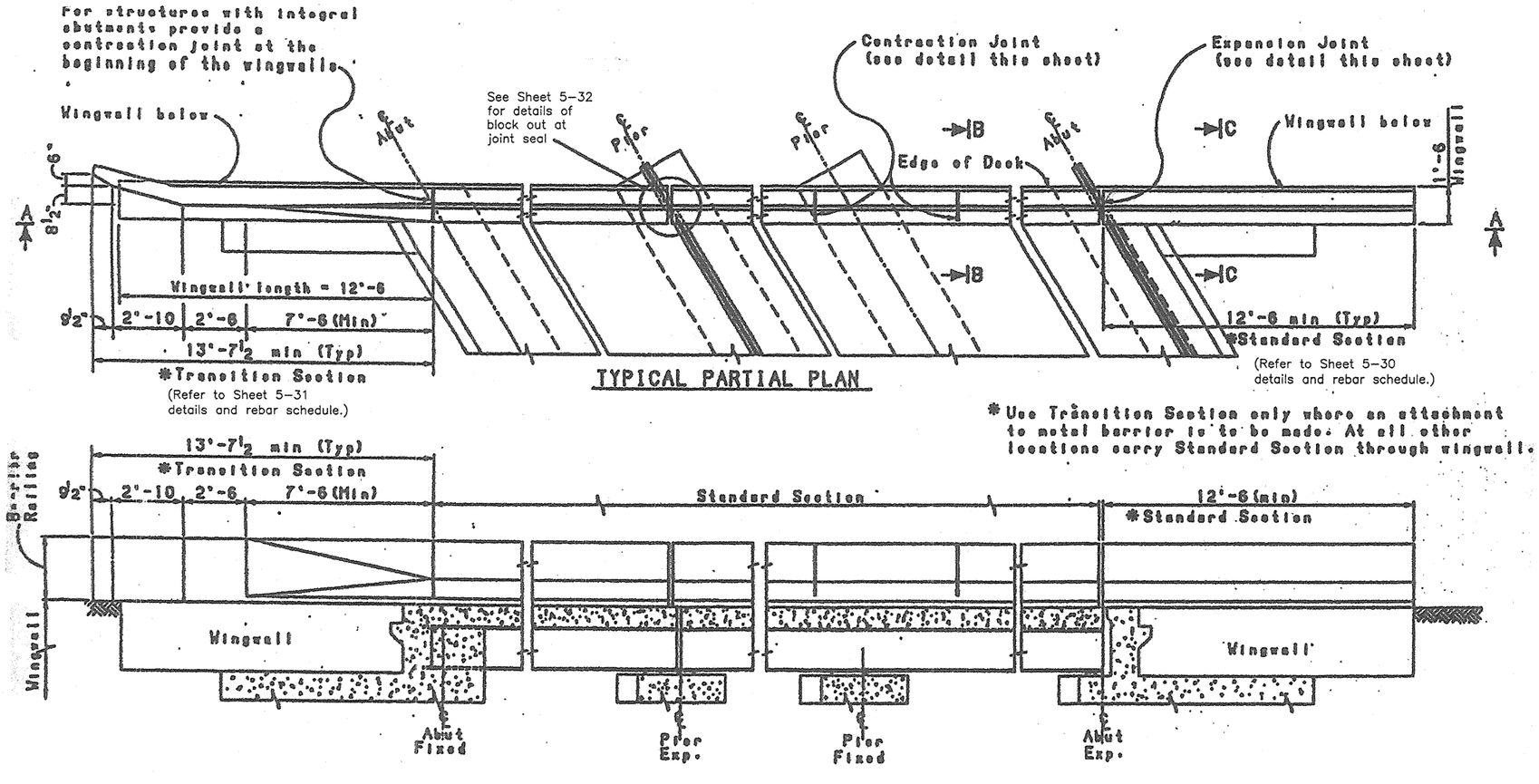

TYPICAL PARTIAL PLAN

* Use Transition Section only where an attachment to metal barrier is to be made. At all other locations carry Standard Section through wingwall.

SECTION A-A

GENERAL NOTES

1. BARRIER RAILING CONCRETE: SUPERSTRUCTURE CONCRETE (4000 PSI), CAST-IN-PLACE USING REMOVABLE FORMS.
2. REINFORCING STEEL: AASHTO M 31, GRADE 60, EPOXY COATED. DIMENSIONS REFER TO CENTERLINE OF BARS UNLESS NOTED OTHERWISE ON THE DRAWINGS.
3. BARRIER RAILING INSTALLATIONS: ON DECK SLABS MAY BE TYPE 1, 2, OR 3 AT THE OPTION OF THE CONTRACTOR. DECK THICKNESS (NEW OR EXISTING) MUST BE APPROPRIATE FOR THE TYPE OF INSTALLATION SELECTED.
4. BARRIER RAILING BEYOND BRIDGE: SEE ROADWAY PLANS FOR TRANSITION AND/OR CONNECTION DETAILS. INSTALL EXPANSION JOINT (SEE DETAIL THIS SHEET) WHERE BARRIER TRANSITIONS TO CONCRETE CURB APPLY.
5. REFLECTIVE BARRIER DELINEATORS: SEE TRAFFIC PLANS FOR DETAILS FOR MOUNTING ON TOP OF THE BARRIER RAILING.
6. APPLY PENETRATING WATER REPELLANT TREATMENT: TO ALL EXPOSED SURFACES OF THE BARRIER RAILING.
7. DISCONTINUE HORIZONTAL REINFORCEMENT: AT ALL EXPANSION AND CONTRACTION JOINT OPENINGS.
8. STRUCTURAL STEEL FOR REMOVABLE COVER PLATES AT EXPANSION JOINTS: AASHTO M-183. APPLY A PROTECTIVE COATING PER SECTION 157 OF THE SPECIFICATIONS. GALVANIZE ALL BOLTS AND HARDWARE.
9. CLEAN AND ROUGHEN CONSTRUCTION JOINTS BETWEEN BARRIER RAILING AND BRIDGE DECK CONCRETE PRIOR TO BARRIER CONCRETE PLACEMENT.
10. COSTS: ALL COMPLETELY EMBEDDED REINFORCING STEEL, ANCHOR BOLTS, ANY OTHER COMPLETELY EMBEDDED OR APPURTENANT STEEL ITEMS, AND REMOVABLE COVER PLATES ARE INCIDENTAL TO THE COST OF BARRIER RAILING.

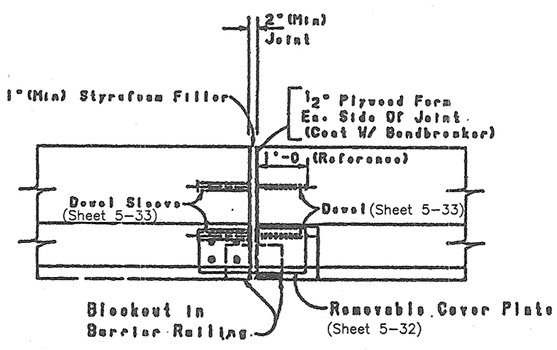

ELEVATION

⚠ EXPANSION JOINT DETAIL

Provide Expansion Joints at each deck slab joint. Refer to Sheet 5-33 for details of the joint, forming materials and dowels.

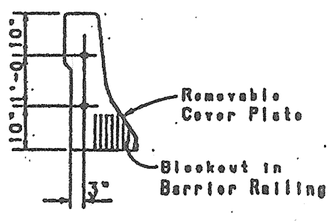

SECTION

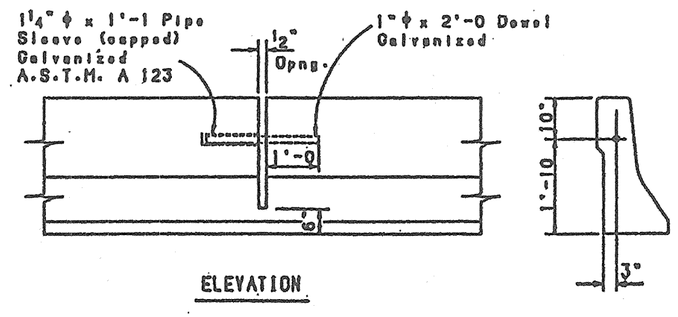

ELEVATION

SECTION

CONTRACTION JOINT DETAIL

Provide Contraction Joints at equally spaced intervals (15' min. 30' max) between Expansion Joints or, for structures with integral abutments, between contraction joints at wingwalls.

MODIFIED BARRIER NOTE:

SEE SHEET 5-5 FOR MODIFICATIONS TO STANDARD BARRIER DETAILS AS REQUIRED BY FRACTURED FIN SURFACE TREATMENT.

DESIGN DATA

DESIGN IS IN ACCORDANCE WITH AASHTO SPECIFICATIONS DATED 1989 AND LATEST INTERIMS.
f'c=3,000 psi @ 28 days. fc=1,200 psi
fy=60,000 psi. fs=24,000 psi. n=8.2

AS-BUILT INFORMATION
CONTRACTOR David Montoya Const. Inc.
WORK STAKED BY Billingsley Engr. DATE
SURVEYED BY COA DATE
FIELD VERIFICATION BY COA/WCL DATE
DRAWINGS CORRECTED BY WCL DATE 3/03
RECORDED BY MICRO-FILM INFORMATION DATE
NO.

BENCH MARKS
THE STA. IS A USGS TABLET STAMPED "BLACK-2 1977" SET FLUSH W/ THE GROUND. THE STA. IS LOCATED 8.5 MI. N.W. OF DOWNTOWN ALBUQ. TO REACH THE STA. FROM THE INTX OF COORS/I-40 GO N. ON COORS 5.8 MI. TO PARADISE BLVD. TURN LEFT GO W. ON PARADISE BLVD. 1.1 MI. TO GOLF COURSE RD. TURN RIGHT GO N. ON GOLF COURSE RD 1.3 MI. TO McMAHON BLVD. THE STA. IS ON THE LEFT.
ELEVATION = 5213.926 FT. (2ND ORDER) (NGVD29)

SURVEY INFORMATION
FIELD NOTES

NO.	BY	DATE

ENGINEER'S SEAL
GARY W. KINCHEN NEW MEXICO 14366 PROFESSIONAL ENGINEER
OCTOBER 25, 2005

NO.	DATE	REMARKS	BY
		REVISIONS	

WILSON & COMPANY, ENGINEERS & ARCHITECTS
DESIGNED BY GWK DATE OCT 2005
DRAWN BY CRH DATE OCT 2005
CHECKED BY SFP DATE OCT 2005

CITY OF ALBUQUERQUE
DEPARTMENT OF MUNICIPAL DEVELOPMENT
TRANSPORTATION DIVISION

McMAHON BLVD. EXTENSION – LAS CALABACILLAS BRIDGE
32" BARRIER RAIL GENERAL DETAILS

Design Review Committee: APPROVED NOV 17 2005 DESIGN REVIEW COMMITTEE
City Engineer Approval: APPROVED NOV 17 2005 CITY ENGINEER
Last Design Update | Mo./Day/Yr. | Mo./Day/Yr.

City Project No.	Zone Map No.	Sheet	Of
COA 681602	A-10-Z	5-29	

WILSON & COMPANY

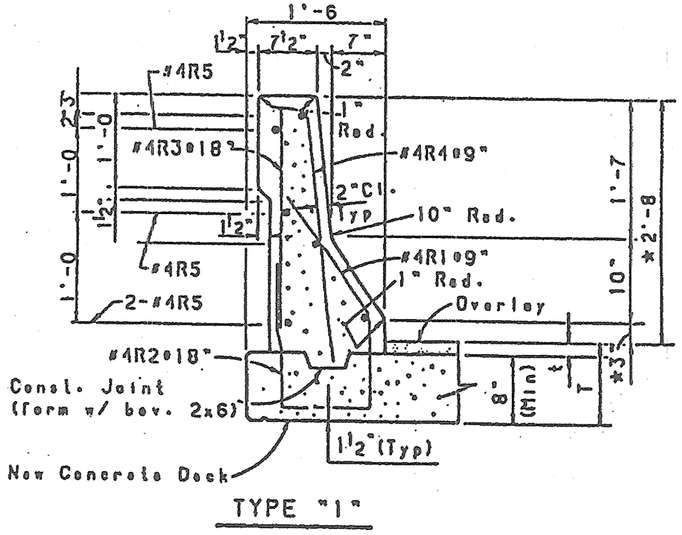

TYPE "1"

Place #4R1 and #4R2 bars with bridge deck reinforcement.

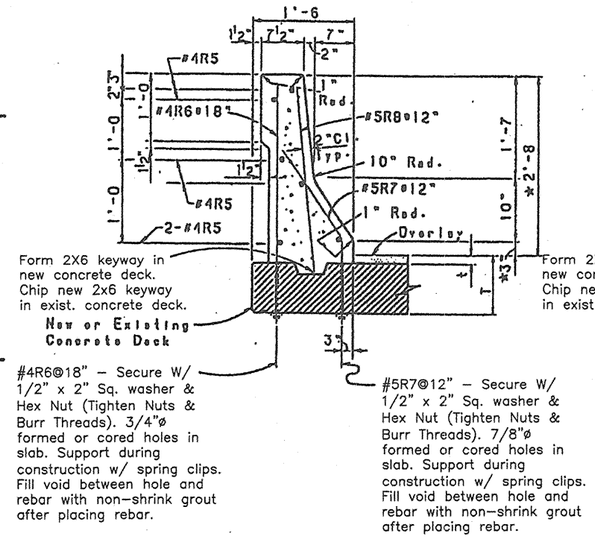

TYPE "2"

SECTION B – B

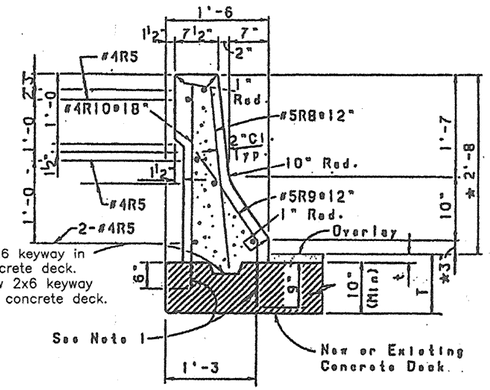

TYPE "3"

NOTES:

1. PLACE REINFORCING BARS IN 7/8" DIA. CORED HOLES AND GROUT INTO PLACE.
2. IMMEDIATELY PRIOR TO PLACING THE DOWELS: REMOVE DUST AND OTHER DELATERIOUS MATERIALS FROM THE HOLES, SATURATE HOLES WITH WATER, REMOVE ALL FREE WATER, AND DRY HOLES TO A SATURATED SURFACE DRY CONDITION.
3. PLACE SUFFICIENT GROUT IN THE HOLES SO NO VOIDS REMAIN AFTER DOWELS ARE INSERTED.
4. CURE GROUT FOR A PERIOD OF 3 DAYS OR UNTIL THE DOWELS ARE ENCASED IN CONCRETE, WHICHEVER OCCURS FIRST. CURE EITHER BY THE CURING COMPOUND METHOD OR BY KEEPING THE GROUT SURFACE CONTINUOUSLY DAMP.
5. REMOVED AND REPLACE ANY DOWELS OR GROUT WHICH FAIL TO BOND OR ARE DAMAGED BEFORE CONCRETE IS PLACED.
6. COST OF CURING AND GROUTING IS INCIDENTAL TO THE BARRIER RAILING.
7. GROUT: NEAT PASTE USING PORTLAND CEMENT AND WATER. MAXIMUM WATER CONTENT = 4 GALLONS/94 POUNDS OF CEMENT. DO NOT RETEMPER GROUT.

ESTIMATED QUANTITIES

(FOR CONTRACTORS INFORMATION ONLY)

ITEM	UNIT	TOTAL
EPOXY COATED REINFORCING BARS, GRADE 60	LB./FT.	10.74
SUPERSTRUCTURE CONCRETE CLASS "AA"	CU. YD./FT.	0.080

The quantities shown in the above table are approximate only and may vary with the type of barrier rail selected.

* These dimensions shall be measured above top of wearing surface, (top of concrete deck, or top of overlay – if any). In determining dimensions of the #4R1, #4R6 or #5R7 bars, the "T" dimension used shall include the thickness ("t") of any overlay.

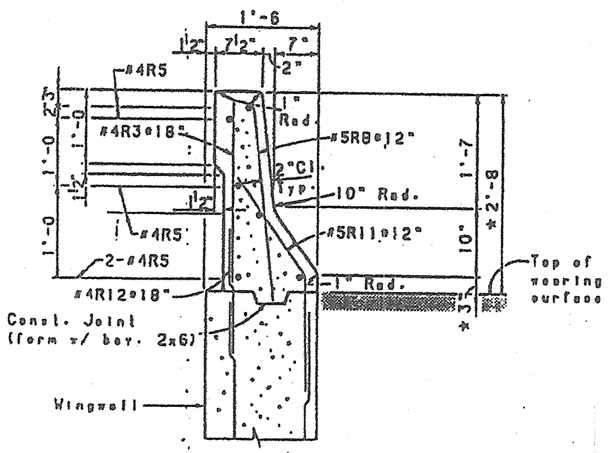

SECTION C - C

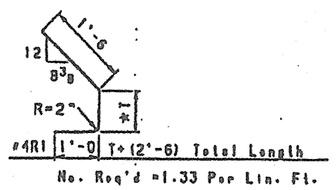

No. Req'd =1.33 Per Lin. Ft.

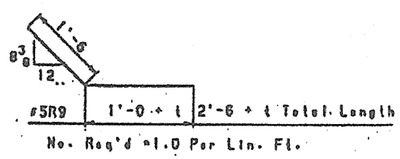

No. Req'd =1.0 Per Lin. Ft.

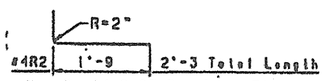

No. Req'd=0.67 Per Lin. Ft.

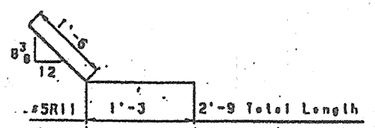

No. Req'd =1.0 Per Lin. Ft.

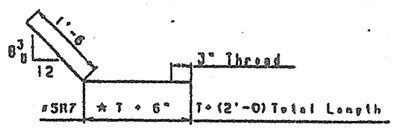

No. Req'd =1.0 Per Lin. Ft.

Mark	Length	No. Req'd Lin. Ft.
#4R3	2'-6 + t	0.67
#4R4	2'-8 + t	1.33
#4R5	Varies	6
‡#4R6	*T + 2'-9	0.67
#5R8	2'-8 + t	1.0
#4R10	3'-0 + t	0.67
#4R12	2'-0	0.67

‡ Thread one end 3"
t = Thickness of overlay

MODIFIED BARRIER NOTE:

SEE SHEET 5-5 FOR MODIFICATIONS TO STANDARD BARRIER DETAILS AS REQUIRED BY FRACTURED FIN SURFACE TREATMENT.

AS-BUILT INFORMATION
CONTRACTOR David Montoya Const. Inc
WORK STAKED BY Billingsley Engr DATE
INSPECTOR'S ACCEPTANCE BY COA DATE
FIELD VERIFICATION BY COA/WCL DATE
DRAWINGS CORRECTED BY WCL DATE 3/03
MICRO-FILM INFORMATION
RECORDED BY DATE
NO.

BENCH MARKS
THE STA. IS A USGS TABLET STAMPED "BLACK-2 1977" SET FLUSH W/ THE GROUND. THE STA. IS LOCATED 8.5 MI. N.W. OF DOWNTOWN ALBUQ. TO REACH THE STA. FROM THE INTX OF COORS/I-40 GO N. ON COORS 5.8 MI. TO PARADISE BLVD. TURN LEFT GO W. ON PARADISE BLVD. 1.1 MI. TO GOLF COURSE RD. TURN RIGHT GO N. ON GOLF COURSE RD. 1.3 MI. TO McMAHON BLVD. THE STA. IS ON THE LEFT.
ELEVATION = 5213.926 FT. (2ND ORDER) (NGVD29)

SURVEY INFORMATION
FIELD NOTES
NO. BY DATE

ENGINEER'S SEAL
GARY W. KINCHEN NEW MEXICO 14366 REGISTERED PROFESSIONAL ENGINEER
OCTOBER 28, 2005

NO.	DATE	REMARKS	BY
		REVISIONS	

WILSON & COMPANY, ENGINEERS & ARCHITECTS
DESIGNED BY GMK DATE OCT 2005
DRAWN BY CRH DATE OCT 2005
CHECKED BY SFP DATE OCT 2005

CITY OF ALBUQUERQUE
DEPARTMENT OF MUNICIPAL DEVELOPMENT
TRANSPORTATION DIVISION

McMAHON BLVD. EXTENSION – LAS CALABACILLAS BRIDGE
32" BARRIER RAILING STANDARD SECTION DETAILS

Design Review Committee: APPROVED NOV 17 2005 DESIGN REVIEW COMMITTEE
City Engineer Approval: APPROVED NOV 17 2005 CITY ENGINEER
Last Design Update | Mo./Day/Yr. | Mo./Day/Yr.

City Project No. COA 681602 | Zone Map No. A-10-Z | Sheet 5-30 Of

WILSON & COMPANY

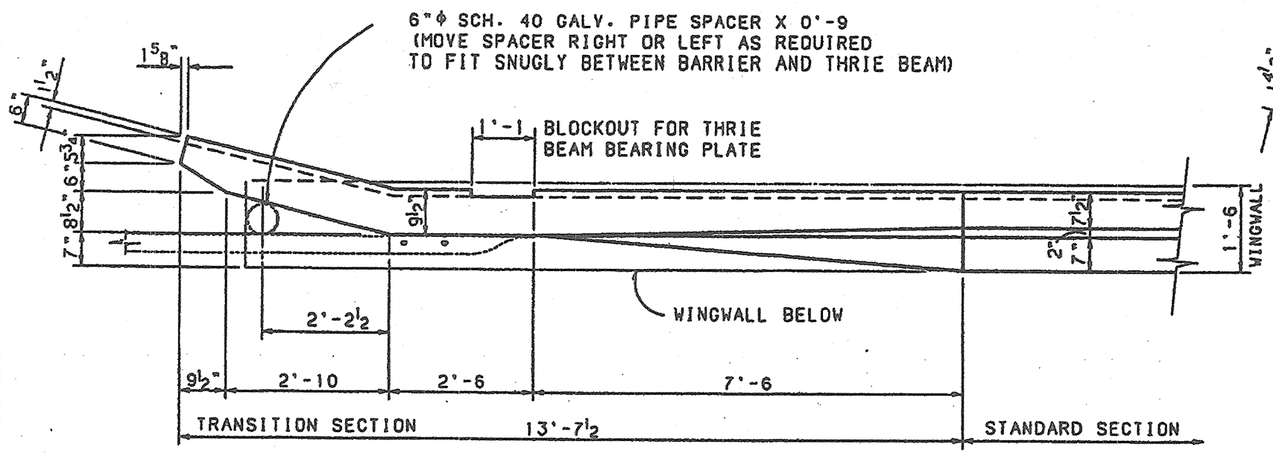

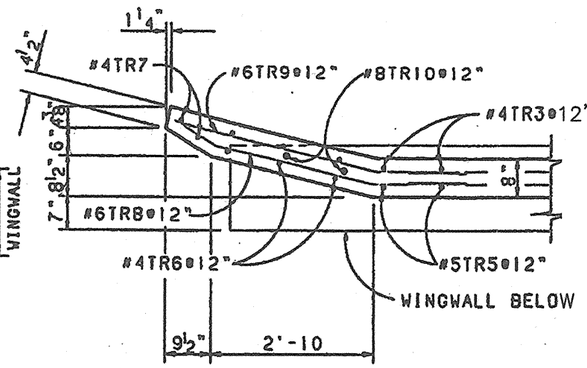

SECTION A - A

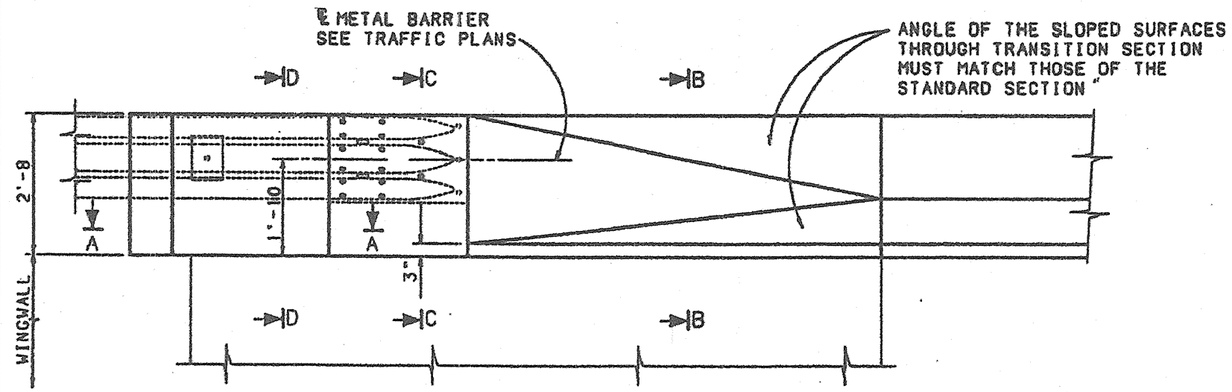

ELEVATION

MODIFIED BARRIER NOTE:

SEE SHEET 5-5 FOR MODIFICATIONS TO STANDARD BARRIER DETAILS AS REQUIRED BY FRACTURED FIN SURFACE TREATMENT.

** ESTIMATED QUANTITIES (FOR ONE TRANSITION)		
EPOXY COATED REINFORCING BARS. GRADE 60	LBS.	220
SUPERSTRUCTURE CONCRETE CLASS "AA"	CU. YDS.	1.0

** FOR CONTRACTORS INFORMATION ONLY

☆ THESE DIMENSIONS SHALL BE MEASURED ABOVE THE TOP OF WEARING SURFACE. (TOP OF DECK OR TOP OF OVERLAY - IF ANY)

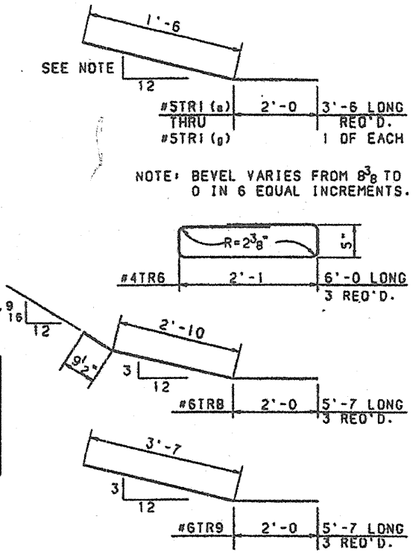

#5TR2	2'-6	8 REQ'D.
#4TR3	3'-8	11 REQ'D.
#4TR4	9'-10	6 REQ'D.
#5TR5	4'-0	4 REQ'D.
#4TR7	2'-3	2 REQ'D.
#8TR10	4'-0	2 REQ'D.

REBAR SCHEDULE
(FOR ONE TRANSITION)

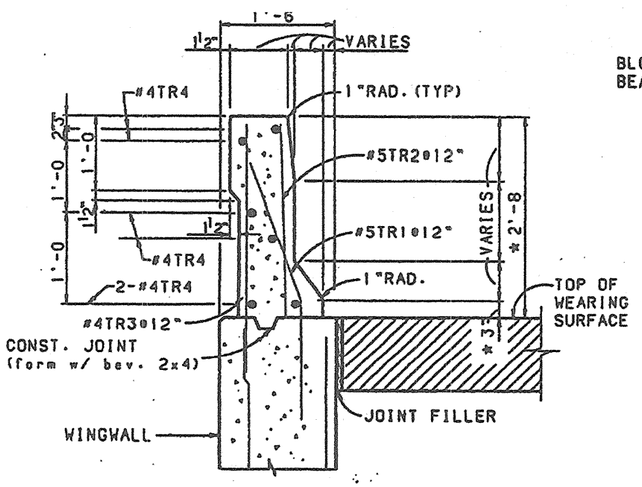

SECTION B - B

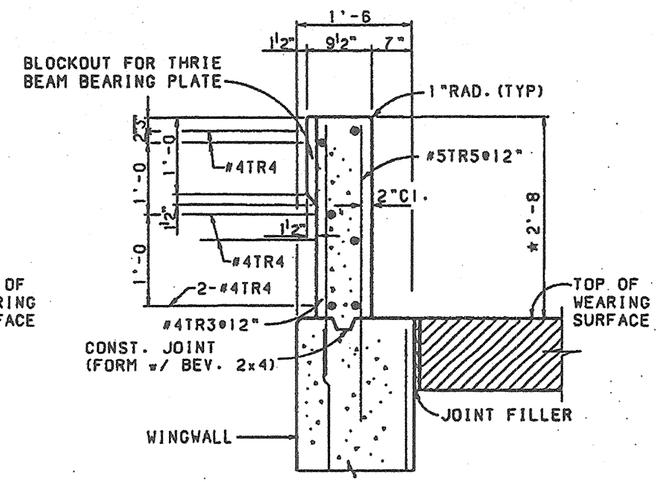

SECTION C - C

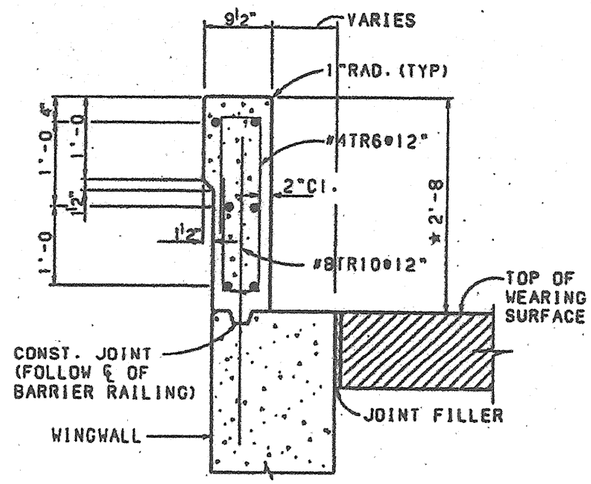

SECTION D - D

AS-BUILT INFORMATION
CONTRACTOR David Montoya Const. Inc. DATE
WORK STAKED BY Wilmsley Engr. DATE
ACCEPTANCE BY COA DATE
FIELD VERIFICATION BY COA/WCL DATE
DRAWINGS CORRECTED BY WCL DATE 3/03
MICRO-FILM INFORMATION
RECORDED BY DATE
NO.

BENCH MARKS
THE STA. IS A USGS TABLET STAMPED 'BLACK-2 1977' SET FLUSH W/ THE GROUND. THE STA. IS LOCATED 8.5 MI. N.W. OF DOWNTOWN ALBUQ. TO REACH THE STA. FROM THE INTX OF COORS/I-40 GO N. ON COORS 5.8 MI. TO PARADISE BLVD. TURN LEFT GO W. ON PARADISE BLVD. 1.1 MI. TO GOLF COURSE RD. TURN RIGHT GO N. ON GOLF COURSE RD. 1.3 MI. TO McMAHON BLVD. THE STA. IS ON THE LEFT.
ELEVATION = 5213.926 FT. (2ND ORDER) (NGVD29)

SURVEY INFORMATION
FIELD NOTES
NO. | BY | DATE

ENGINEER'S SEAL
GARY W. KINCHEN
NEW MEXICO
14368
REGISTERED PROFESSIONAL ENGINEER
OCTOBER 26, 2005

REMARKS
REVISIONS
NO. | DATE | BY

WILSON & COMPANY, ENGINEERS & ARCHITECTS
DESIGNED BY GWK DATE OCT 2005
DRAWN BY CRH DATE OCT 2005
CHECKED BY SFP DATE OCT 2005

CITY OF ALBUQUERQUE
DEPARTMENT OF MUNICIPAL DEVELOPMENT
TRANSPORTATION DIVISION

McMAHON BLVD. EXTENSION – LAS CALABACILLAS BRIDGE
32" BARRIER RAILING TRANSITION SECTION DETAILS

Design Review Committee: APPROVED NOV 17 2005 DESIGN REVIEW COMMITTEE
City Engineer Approval: APPROVED NOV 17 2005 CITY ENGINEER
Last Design Update | Mo./Day/Yr. | Mo./Day/Yr.

City Project No. COA 681602 | Zone Map No. A-10-Z | Sheet 5-31 Of

WILSON & COMPANY

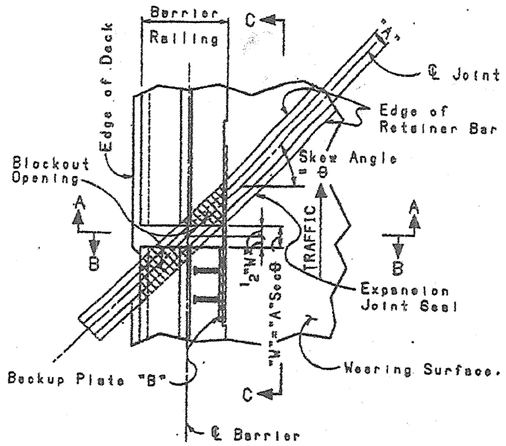

PART PLAN-SKEW JOINT
AT CONCRETE BARRIER RAILING

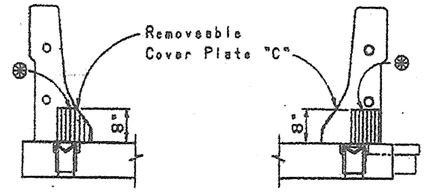

SECTION A-A

SECTION B-B

SIMILAR DETAIL FOR CURB AND SIDEWALK.

⊛ Blockout in base of Barrier Railing.

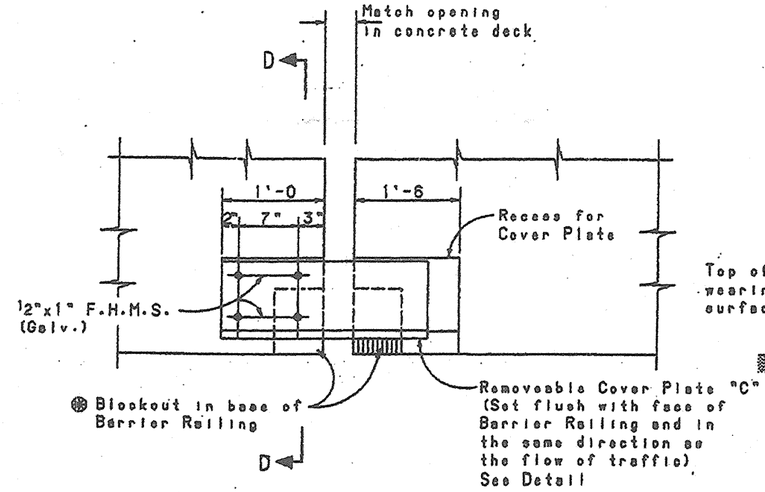

ELEVATION C-C

Provide Expansion Joints at each deck slab joint.

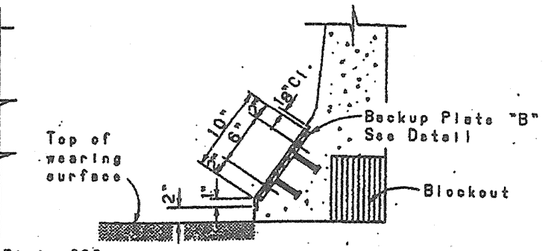

SECTION D-D

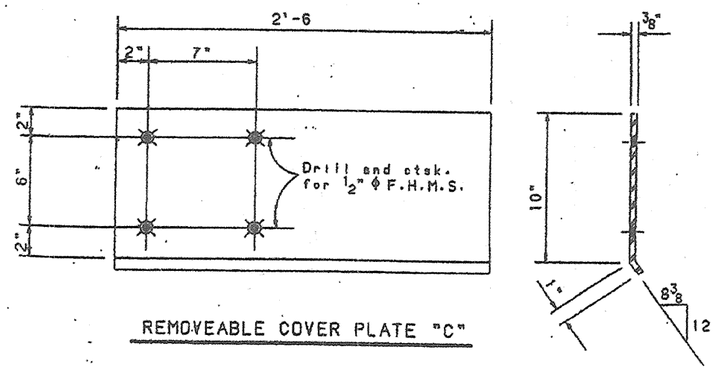

REMOVEABLE COVER PLATE "C"

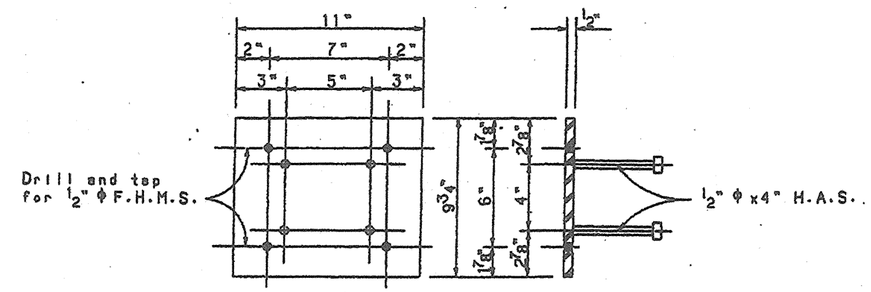

BACKUP PLATE "B"

MODIFIED BARRIER NOTE:

SEE SHEET 5-5 FOR MODIFICATIONS TO STANDARD BARRIER DETAILS AS REQUIRED BY FRACTURED FIN SURFACE TREATMENT.

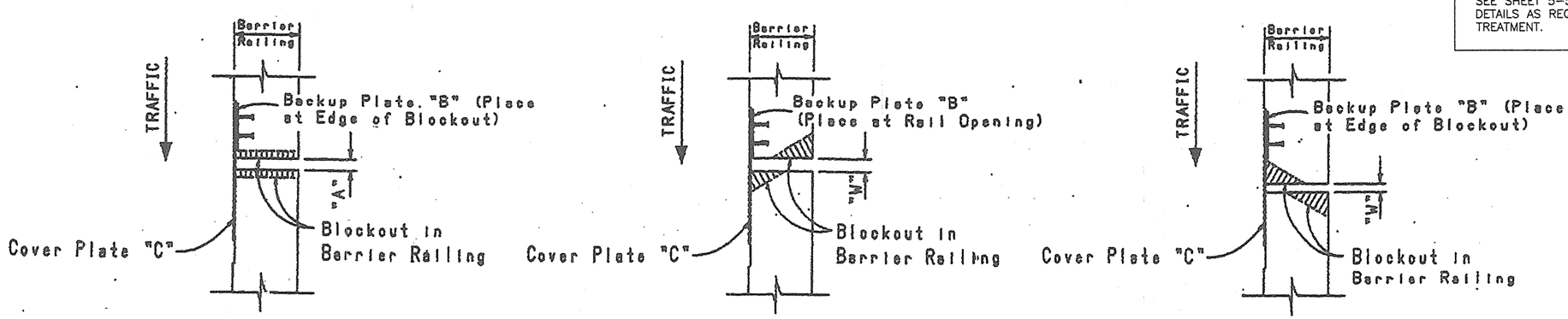

NORMAL

RF SKEW

LF SKEW

BACKUP PLATE "B" LOCATIONS

AS-BUILT INFORMATION
CONTRACTOR David Martinez Const. Inc. DATE
STAKED BY Brillingsley Engr. DATE
INSPECTOR'S NOTES CORRECTED BY COA DATE
FIELD VERIFICATION BY COA/WCI DATE
DRAWINGS CORRECTED BY WCI DATE 2/09
RECEIVED BY MICRO-FILM INFORMATION
DATE
NO.

BENCH MARKS
THE STA. IS A USGS TABLET STAMPED "BLACK-2 1977" SET IN CONCRETE IN THE SIDEWALK FLUSH W/ THE GROUND. THE STA. IS LOCATED 8.5 MI. N.W. OF DOWNTOWN ALBUQ. TO REACH THE STA. FROM THE INTX OF COORS/I-40 GO N. ON COORS 5.8 MI. TO PARADISE BLVD. TURN LEFT GO W. ON PARADISE BLVD. 1.1 MI. TO GOLF COURSE RD. TURN RIGHT GO N. ON GOLF COURSE RD. 1.3 MI. TO McMAHON BLVD. THE STA. IS ON THE LEFT.
ELEVATION = 5213.926 FT. (2ND ORDER) (NGVD29)

SURVEY INFORMATION
FIELD NOTES

NO.	BY	DATE

ENGINEER'S SEAL
GARY W. KINCHEN NEW MEXICO 14368 REGISTERED PROFESSIONAL ENGINEER
OCTOBER 28, 2005

NO.	DATE	REMARKS	BY

REVISIONS

WILSON & COMPANY, ENGINEERS & ARCHITECTS

DESIGNED BY	GWK	DATE	OCT 2005		
DRAWN BY	CRH	DATE	OCT 2005		
CHECKED BY	SFP	DATE	OCT 2005		

CITY OF ALBUQUERQUE
DEPARTMENT OF MUNICIPAL DEVELOPMENT
TRANSPORTATION DIVISION

McMAHON BLVD. EXTENSION – LAS CALABACILLAS BRIDGE
32" BARRIER RAILING DETAILS AT JOINT SEALS

Design Review Committee: APPROVED NOV 17 2005 DESIGN REVIEW COMMITTEE
City Engineer Approval: APPROVED NOV 17 2005 CITY ENGINEER
Last Design Update | Mo./Day/Yr. | Mo./Day/Yr.

City Project No. COA 681602 | Zone Map No. A-10-Z | Sheet 5 Of 32

WILSON & COMPANY

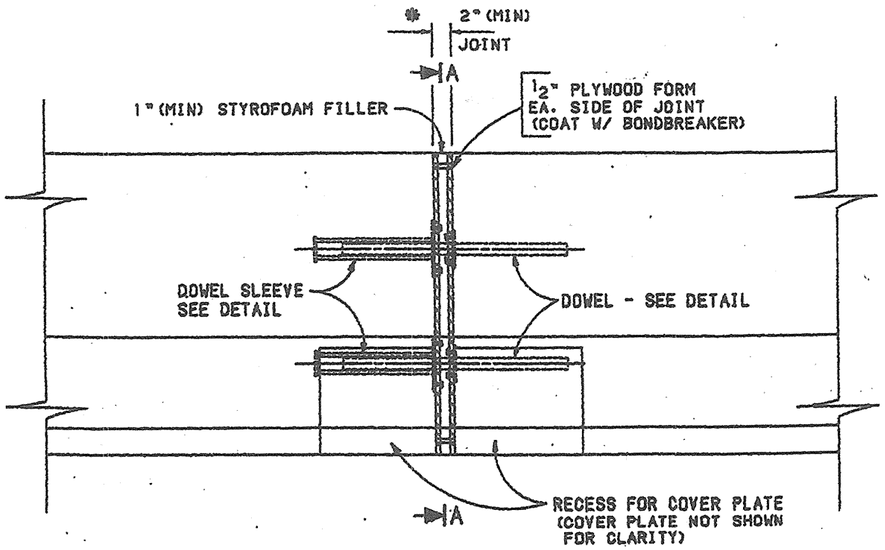

ASSEMBLY DETAIL

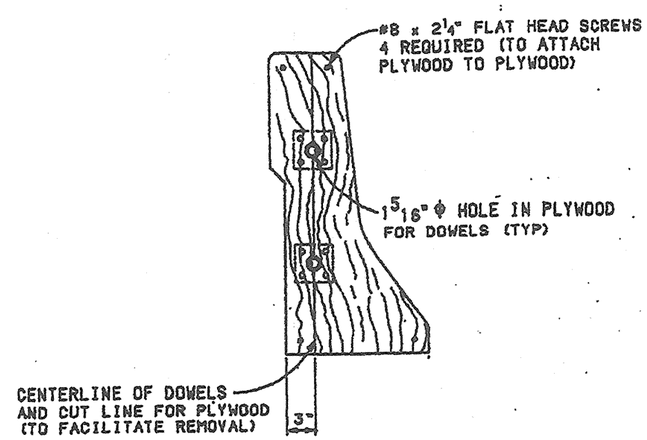

SECTION A-A

GENERAL NOTES

1. SPECIFICATIONS FOR CONSTRUCTION: CITY OF ALBUQUERQUE STANDARD SPECIFICATIONS FOR PUBLIC WORKS CONSTRUCTION, 1986 WITH UPDATES, AND APPLICABLE SUPPLEMENTAL TECHNICAL SPECIFICATIONS.
2. STRUCTURAL STEEL: AASHTO M-183 UNLESS OTHERWISE NOTED ON THE DETAILS. HOT-DIP GALVANIZE IN ACCORDANCE WITH AASHTO M-111.
3. SLEEVE ASSEMBLY: SET PARALLEL TO THE BRIDGE DECK GRADE AND OUTSIDE FACE OF CONCRETE BARRIER RAILING.
4. PLYWOOD FORMS AND STYROOAM FILLER: CUT TO THE CROSS SECTION OF THE CONCRETE BARRIER RAILING. COAT PLYWOOD FORMS WITH AN APPROVED BOND-BREAKER.
5. REMOVAL: AFTER CONCRETE HAS TAKEN INITIAL SET, REMOVE STYROFOAM FILLER, 1/4" HEX. HD. CAP SCREWS, AND 1/2" PLYWOOD FORMS FROM THE JOINT. (CUT THE #8 SCREWS TO FACILITATE THE PLYWOOD FORM REMOVAL).
6. MOVEMENT LENGTHS IN EXCESS OF 250 FEET: INCREASE JOINT OPENING (*) AS REQUIRED.
7. THE COST OF ALL FORMING MATERIALS FOR THE EXPANSION JOINT IS INCIDENTAL TO THE COST OF THE CONCRETE BARRIER RAILING.

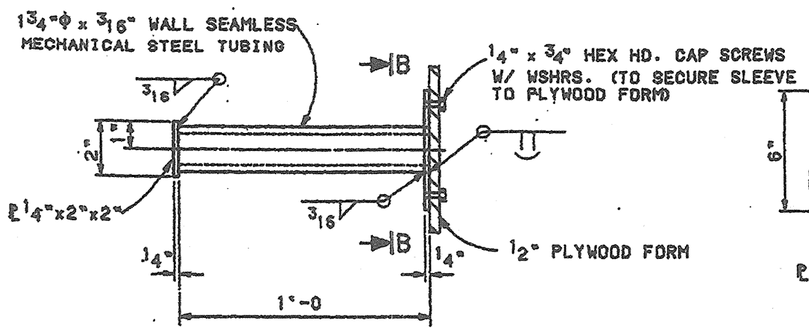

DOWEL SLEEVE DETAIL

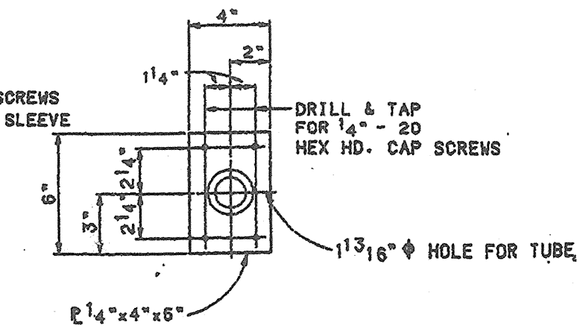

SECTION B-B

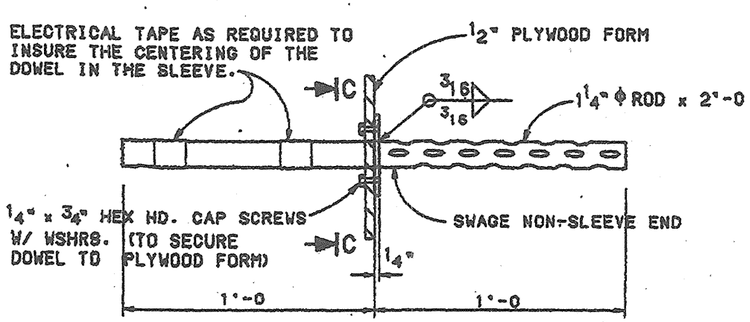

DOWEL DETAIL

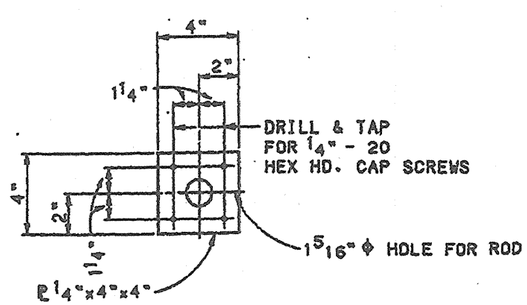

SECTION C-C

MODIFIED BARRIER NOTE:

SEE SHEET 5-5 FOR MODIFICATIONS TO STANDARD BARRIER DETAILS AS REQUIRED BY FRACTURED FIN SURFACE TREATMENT.

AS-BUILT INFORMATION
CONTRACTOR David Montoya Const. Inc.
WORK STAKED BY Billingsley Eng. DATE
STAKED BY ACCEPTANCE BY COA DATE
VERIFICATION BY COA/WCI DATE 3/07
DRAWINGS CORRECTED BY WCI DATE
RECORDED BY DATE
NO.

BENCH MARKS
THE STA. IS A USGS TABLET STAMPED "BLACK-2 1977" SET FLUSH W/ THE GROUND. THE STA. IS LOCATED 8.5 MI. N.W. OF DOWNTOWN ALBUQ. TO REACH THE STA. FROM THE INTX OF COORS/I-40 GO N. ON COORS 5.8 MI. TO PARADISE BLVD. TURN LEFT GO W. ON PARADISE BLVD. 1.1 MI. TO GOLF COURSE RD. TURN RIGHT GO N. ON GOLF COURSE RD. 1.3 MI. TO McMAHON BLVD. THE STA. IS ON THE LEFT.
ELEVATION = 5213.926 FT. (2ND ORDER) (NGVD29)

SURVEY INFORMATION
FIELD NOTES
NO. BY DATE

ENGINEER'S SEAL
GARY W. KINCHEN NEW MEXICO 14368 REGISTERED PROFESSIONAL ENGINEER
OCTOBER 28, 2005

NO. DATE REMARKS BY
REVISIONS
WILSON & COMPANY, ENGINEERS & ARCHITECTS
DESIGNED BY GWK DATE OCT 2005
DRAWN BY CRH DATE OCT 2005
CHECKED BY SFP DATE OCT 2005

CITY OF ALBUQUERQUE
DEPARTMENT OF MUNICIPAL DEVELOPMENT
TRANSPORTATION DIVISION

McMAHON BLVD. EXTENSION – LAS CALABACILLAS BRIDGE
DOWEL ASSEMBLY FOR EXPANSION JOINTS 32" BARRIER RAILING

Design Review Committee: APPROVED NOV 17 2005 DESIGN REVIEW COMMITTEE
City Engineer Approval: APPROVED NOV 17 2005 CITY ENGINEER
Last Design Update Mo./Day/Yr. Mo./Day/Yr.

City Project No. COA 681602 | Zone Map No. A-10-Z | Sheet 5-33 Of

WILSON & COMPANY

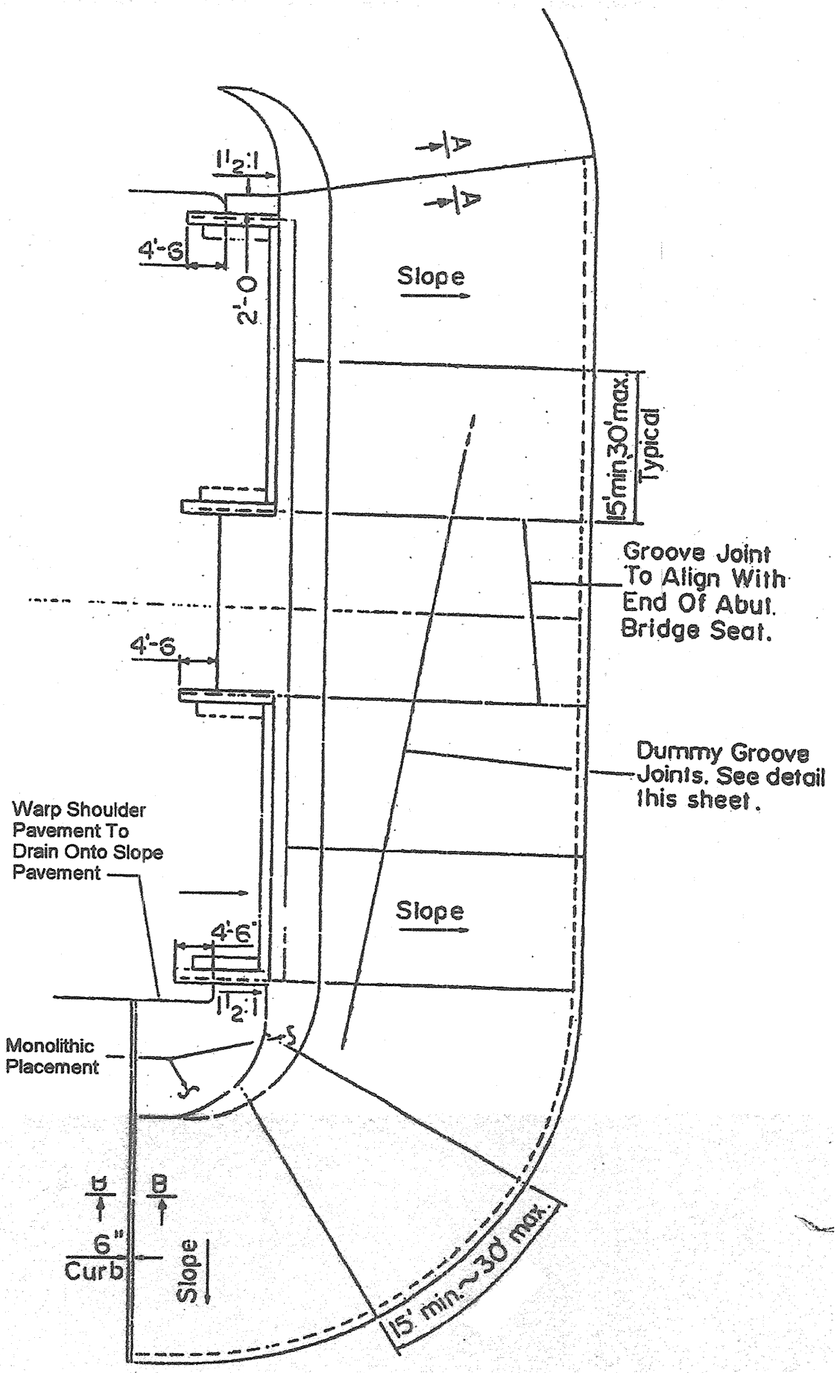

PLAN AT ABUTMENT
(Typ. Installation)

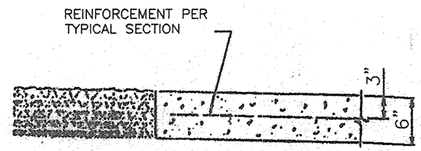

SECTION A–A

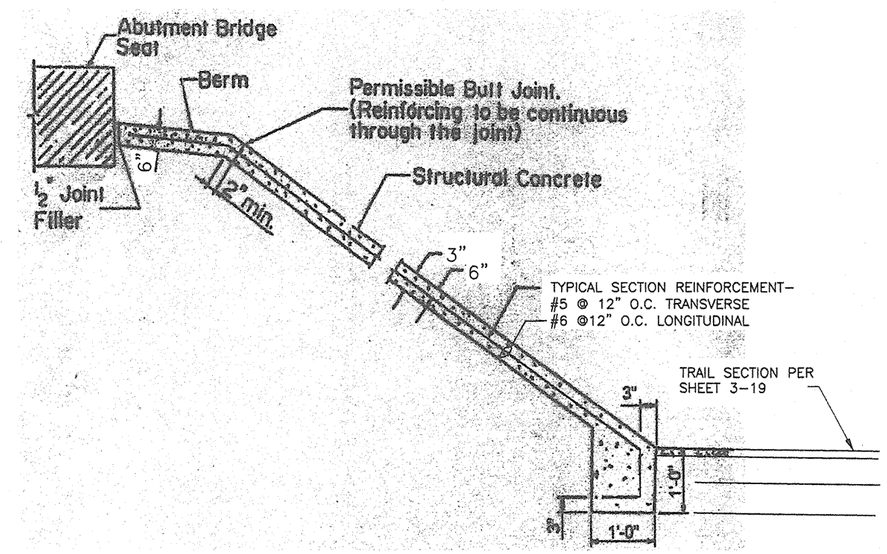

TYPICAL SECTION THROUGH
SLOPE PAVEMENT

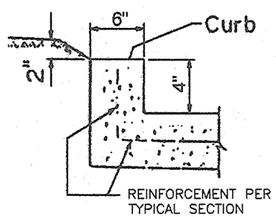

SECTION B–B

GENERAL NOTES

1. CONCRETE: 3000 PSI MINIMUM 28 DAY STRENGTH. A HIGHER CONCRETE STRENGTH IS PERMISSIBLE AT NO ADDITIONAL COST TO THE CITY. CONCRETE SHALL BE TINTED, COLOR SHALL BE DAVIS COLORS, SAN DIEGO BUFF © 1#/SACK CEMENT.
2. JOINT FILLER; PREFORMED BITUMINOUS JOINT FILLER PER AASHTO M213. COST OF FILLER IS INCIDENTAL TO THE WORK.
3. REINFORCEMENT: ASTM A 615, GRADE 60. COST OF REINFORCEMENT IS INCIDENTAL TO THE WORK. REINFORCEMENT SHALL BE SET ON 3 INCH HIGH INDIVIDUAL SAND CHAIRS. MINIMUM SPACING SHALL BE 4 FEET ON CENTER. COST OF SAND CHAIRS SHALL BE INCIDENTAL TO THE WORK.
4. EXCAVATION FOR SLOPE PAVEMENT: COST IS INCIDENTAL TO THE WORK.
5. INSTALL CONSTRUCTION JOINTS ONLY AT THOSE LOCATIONS SHOWN ON THIS DRAWING.
6. SEE OTHER BRIDGE PLAN SHEETS FOR ESTIMATED QUANTITIES, LAYOUT AND OTHER DETAILS NOT SHOWN.
7. QUANTITY FOR STRUCTURAL CONCRETE FOR SLOPE PAVEMENT IS THE AREA OF THE EXPOSED SLOPE PAVEMENT SURFACE.

AS–BUILT INFORMATION
CONTRACTOR David Martinez Const Inc DATE
WORK STAKED BY Billingsley Engr DATE
INSPECTOR'S ACCEPTANCE BY COA DATE
FIELD VERIFICATION BY COA/WCL DATE
DRAWINGS CORRECTED BY WCL DATE 5/07
MICRO–FILM INFORMATION
RECORDED BY DATE
NO. DATE

BENCH MARKS
THE STA. IS A USGS TABLET STAMPED "BLACK–2 1977" SET FLUSH W/ THE GROUND. THE STA. IS LOCATED 8.5 MI. N.W. OF DOWNTOWN ALBUQ. TO REACH THE STA. FROM THE INTX OF COORS/I–40 GO N. ON COORS 5.8 MI. TO PARADISE BLVD. TURN LEFT GO W. ON PARADISE BLVD. 1.1 MI. TO GOLF COURSE RD. TURN RIGHT GO N. ON GOLF COURSE RD. 1.3 MI. TO McMAHON BLVD. THE STA. IS ON THE LEFT.
ELEVATION = 5213.926 FT. (2ND ORDER) (NGVD29)

SURVEY INFORMATION
FIELD NOTES
NO. BY DATE

ENGINEER'S SEAL
GARY W. KINCHEN NEW MEXICO 14388 REGISTERED PROFESSIONAL ENGINEER
OCTOBER 28, 2009

REVISIONS
NO. DATE REMARKS BY

WILSON & COMPANY, ENGINEERS & ARCHITECTS
DESIGNED BY CWK DATE OCT 2005
DRAWN BY CRH DATE OCT 2005
CHECKED BY SFP DATE OCT 2005

CITY OF ALBUQUERQUE
DEPARTMENT OF MUNICIPAL DEVELOPMENT
TRANSPORTATION DIVISION

McMAHON BLVD. EXTENSION – LAS CALABACILLAS BRIDGE
SLOPE PAVEMENT DETAIL AT BRIDGE

Design Review Committee: APPROVED NOV 17 2009 DESIGN REVIEW COMMITTEE
City Engineer Approval: APPROVED NOV 17 2009 CITY ENGINEER
Last Design Update Mo./Day/Yr. Mo./Day/Yr.

City Project No. COA 681602 | Zone Map No. A–10–Z | Sheet 5–34 Of

WILSON & COMPANY

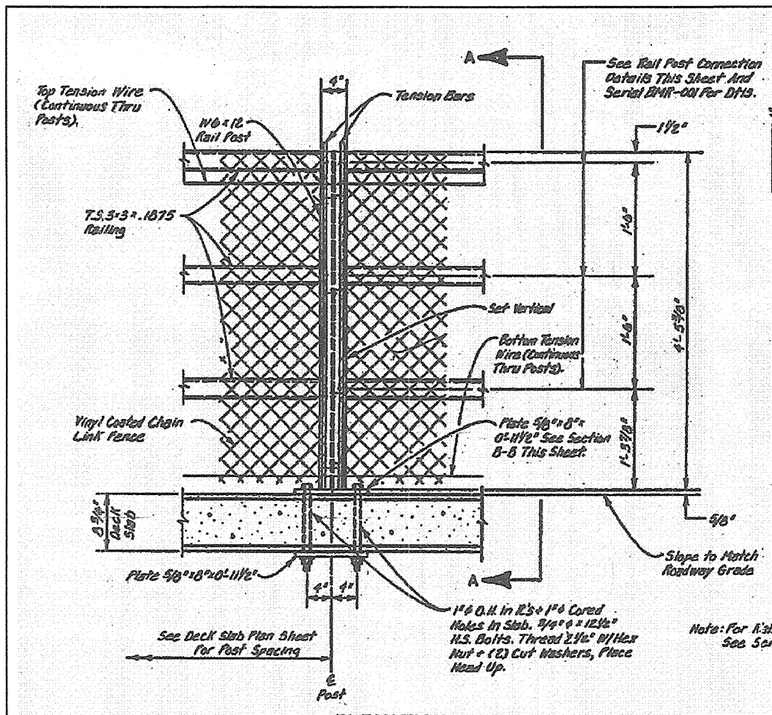

ELEVATION

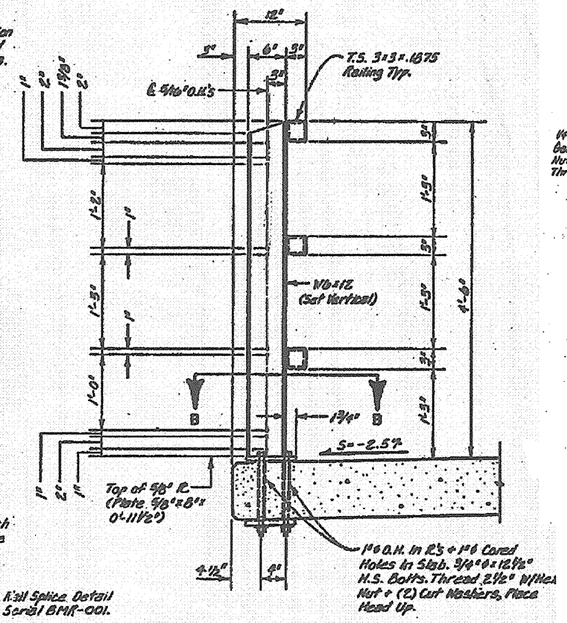

Note: For Rail Splice Detail See Serial BMR-001.

SECTION A-A

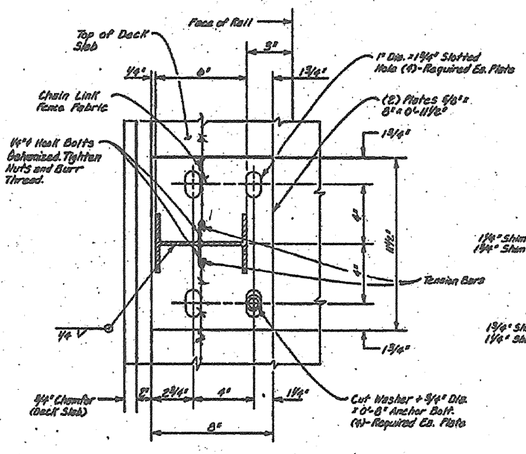

SECTION B-B

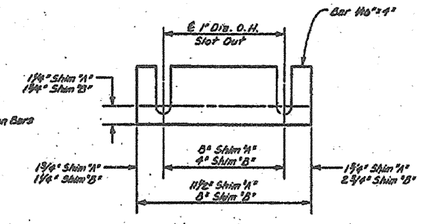

POST SHIM DETAIL

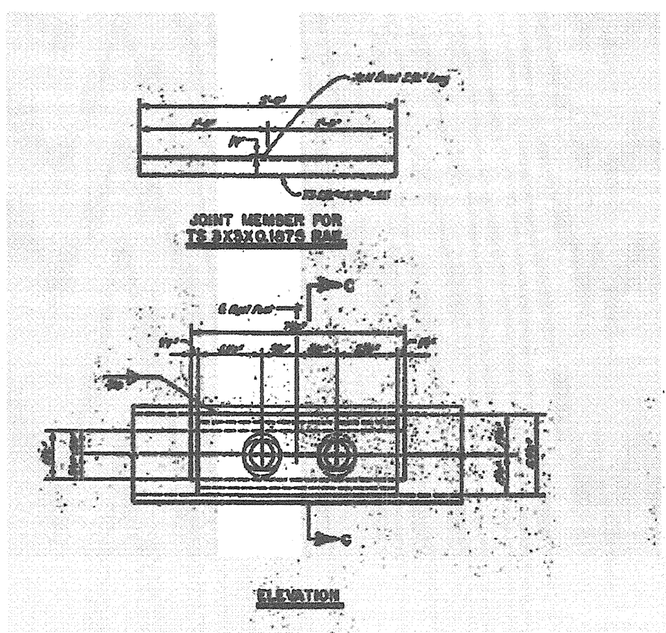

RAIL POST CONNECTION DETAILS

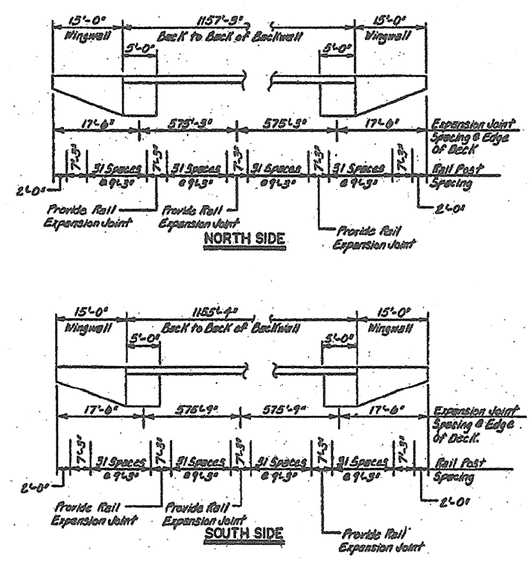

GENERAL NOTES

1. SEE COA DWG. 2604 FOR VINYL COATED CHAIN LINK FENCE ATTACHMENT DETAILS.
2. COLOR OF CHAIN LINK FENCE AND HARDWARE – SEE PROJECT SPECIFICATIONS.
3. ALL LABOR AND MATERIAL COSTS OF VINYL COATED FENCE, AND PAINT FOR FENCE AND RAILING ARE INCIDENTAL TO THE COST OF THE METAL PEDESTRIAN RAILING.

AS-BUILT INFORMATION
CONTRACTOR David Montoya Const. Inc
WORK STARTED BY Gallegos Engr. DATE
INSPECTOR'S CORRECTIONS BY COA DATE
FIELD VERIFICATION BY COA DATE
DRAWINGS CORRECTED BY WCL DATE 3/07
RECORDED BY DATE
NO.

BENCH MARKS
THE STA. IS A USGS TABLET STAMPED 'BLACK-2 1977' SET FLUSH W/ THE GROUND. THE STA. IS LOCATED 8.5 MI. N.W. OF DOWNTOWN ALBUQ. TO REACH THE STA. FROM THE INTX OF COORS/I-40 GO N. ON COORS 5.8 MI. TO PARADISE BLVD. TURN LEFT GO W. ON PARADISE BLVD. 1.1 MI. TO GOLF COURSE RD. TURN RIGHT GO N. ON GOLF COURSE RD. 1.3 MI. TO McMAHON BLVD. THE STA. IS ON THE LEFT.
ELEVATION = 5213.926 FT. (2ND ORDER) (NGVD29)

SURVEY INFORMATION
FIELD NOTES
NO. BY DATE

ENGINEER'S SEAL
GARY W. KINCHEN NEW MEXICO 14366 REGISTERED PROFESSIONAL ENGINEER
OCTOBER 28, 2005

NO.	DATE	REMARKS	BY

REVISIONS

WILSON & COMPANY, ENGINEERS & ARCHITECTS
DESIGNED BY GWK DATE OCT 2005
DRAWN BY CRH DATE OCT 2005
CHECKED BY SFP DATE OCT 2005

CITY OF ALBUQUERQUE
DEPARTMENT OF MUNICIPAL DEVELOPMENT
TRANSPORTATION DIVISION

McMAHON BLVD. EXTENSION – LAS CALABACILLAS BRIDGE
METAL PEDESTRIAN RAILING DETAILS

Design Review Committee: APPROVED NOV 17 2005 DESIGN REVIEW COMMITTEE
City Engineer Approval: APPROVED NOV 17 2005 CITY ENGINEER
Last Design Update | Mo./Day/Yr. | Mo./Day/Yr.

City Project No. COA 681602 | Zone Map No. A-10-Z | Sheet 5 Of 35

WILSON & COMPANY