CONSTRUCTION PLANS

FOR

VISTA DEL NORTE - UNIT 5A

(VALLE GRANDE DEL NORTE UNIT 2)

ALBUQUERQUE, NEW MEXICO

SCANNED BY
MESA REPRO

F:\A01.DGS\A1005VDN\Unit5a\A1005COVER-5A.dwg Thu Jan 09 15:09:27 2003 D. MARK GOODWIN & ASSOCIATES, PLTTED BY: ACH

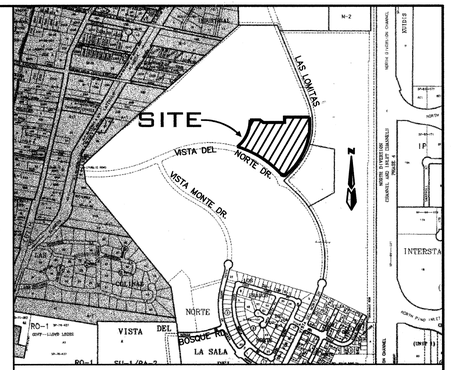

VICINITY MAP — ZONE ATLAS D-16

SCALE: NONE

GENERAL NOTES

NOTICE TO CONTRACTORS

1. AN EXCAVATION/CONSTRUCTION PERMIT WILL BE REQUIRED BEFORE BEGINNING ANY WORK WITHIN THE CITY RIGHT-OF-WAY.
2. ALL WORK DETAILED ON THESE PLANS TO BE PERFORMED UNDER CONTRACT SHALL, EXCEPT AS OTHERWISE STATED OR PROVIDED FOR HEREON, BE CONSTRUCTED IN ACCORDANCE WITH THE CITY OF ALBUQUERQUE STANDARD SPECIFICATIONS FOR PUBLIC WORKS CONSTRUCTION, 1986 EDITION AS REVISED THROUGH UPDATE #6.
3. TWO WORKING DAYS PRIOR TO ANY EXCAVATION, THE CONTRACTOR MUST CONTACT NEW MEXICO ONE CALL SYSTEM (260-1990) FOR LOCATION OF EXISTING UTILITIES.
4. PRIOR TO CONSTRUCTION, THE CONTRACTOR SHALL EXCAVATE AND VERIFY THE HORIZONTAL AND VERTICAL LOCATIONS OF ALL OBSTRUCTIONS. SHOULD A CONFLICT EXIST, THE CONTRACTOR SHALL NOTIFY THE ENGINEER IMMEDIATELY SO THAT THE CONFLICT CAN BE RESOLVED WITH A MINIMUM AMOUNT OF DELAY.
5. SEVEN (7) WORKING DAYS PRIOR TO BEGINNING OF CONSTRUCTION, THE CONTRACTOR SHALL SUBMIT TO CONSTRUCTION COORDINATION DIVISION A DETAILED CONSTRUCTION SCHEDULE. SEVEN (7) WORKING DAYS PRIOR TO THE START OF CONSTRUCTION, THE CONTRACTOR SHALL OBTAIN A BARRICADING PERMIT FROM THE CONSTRUCTION COORDINATION DIVISION. CONTRACTOR SHALL NOTIFY THE CONSTRUCTION COORDINATION ENGINEER (924-3400) PRIOR TO OCCUPYING AN INTERSECTION. REFER TO SECTION 19 OF THE GENERAL CONDITIONS OF THE STANDARD SPECIFICATIONS.
6. ALL WORK AFFECTING ARTERIAL ROADWAYS REQUIRES TWENTY-FOUR HOUR CONSTRUCTION.
7. ALL STREET STRIPING ALTERED OR DESTROYED SHALL BE REPLACED WITH PLASTIC REFLECTORIZED PAVEMENT MARKING BY CONTRACTOR TO THE SAME LOCATION AS WAS EXISTING, OR AS INDICATED BY THIS PLAN SET.
8. CONTRACTOR SHALL NOTIFY THE ENGINEER NOT LESS THAN SEVEN (7) DAYS PRIOR TO STARTING WORK IN ORDER THAT THE CITY SURVEYOR MAY TAKE NECESSARY MEASURES TO INSURE THE PRESERVATION OF SURVEY MONUMENTS. CONTRACTOR SHALL NOT DISTURB PERMANENT SURVEY MONUMENTS WITHOUT THE CONSENT OF THE CITY SURVEYOR AND SHALL NOTIFY THE CITY SURVEYOR AND BEAR THE EXPENSE OF REPLACING ANY THAT MAY BE DISTURBED WITHOUT PERMISSION. REPLACEMENT SHALL BE DONE ONLY BY THE CITY SURVEYOR. WHEN A CHANGE IS MADE IN THE FINISHED ELEVATIONS OF THE PAVEMENT OF ANY ROADWAY IN WHICH A PERMANENT SURVEY MONUMENT IS LOCATED, CONTRACTOR SHALL, AT HIS OWN EXPENSE, ADJUST THE MONUMENT TO COVER THE NEW GRADE UNLESS OTHERWISE SPECIFIED. REFER TO SECTION 4.4 OF THE GENERAL CONDITIONS OF THE STANDARD SPECIFICATIONS.

   CONTRACTOR SHALL RECORD DATA ON ALL UTILITY LINES AND ACCESSORIES AS REQUIRED BY THE CITY OF ALBUQUERQUE FOR THE PREPARATION OF "AS CONSTRUCTED" DRAWINGS. CONTRACTOR SHALL NOT COVER UTILITY LINES AND ACCESSORIES UNTIL ALL DATA HAVE BEEN RECORDED.
10. CONTRACTOR SHALL MAINTAIN A GRAFFITI-FREE WORK SITE. CONTRACTOR SHALL PROMPTLY REMOVE ANY GRAFFITI FROM ALL EQUIPMENT, WHETHER PERMANENT OR TEMPORARY.
11. CONTRACTOR SHALL COORDINATE WITH THE CITY OF ALBUQUERQUE WATER SYSTEMS DIVISION (857-8200) SEVEN (7) WORKING DAYS IN ADVANCE OF ANY WORK THAT MAY AFFECT EXISTING PUBLIC WATER OR SEWER UTILITIES. EXISTING VALVES TO BE OPERATED BY CITY PERSONNEL ONLY. CONTRACTOR SHALL CONTACT THE WATER SYSTEMS DIVISION SEVEN (7) WORKING DAYS PRIOR TO NEEDING VALVES TURNED ON OR OFF.
12. FOR STORM DRAIN CONSTRUCTION, RCP JOINTS SHALL NOT BE GROUTED PRIOR TO FINAL INSPECTION. FINAL INSPECTION WILL DETERMINE JOINTS TO BE GROUTED FOR FINAL ACCEPTANCE BY CITY.
13. ALL EXCAVATION, TRENCHING AND SHORING ACTIVITIES MUST BE CARRIED-OUT IN ACCORDANCE WITH OSHA 29 CFR 1926.650 SUBPART P.

THE FOLLOWING NOTES ALSO APPLY WHEN CHECKED

- [x] ALL UTILITIES AND UTILITY SERVICE LINES SHALL BE INSTALLED PRIOR TO PAVING.
- [x] BACKFILL COMPACTION SHALL BE ACCORDING TO SPECIFIED STREET USE.
- [ ] TACK COAT REQUIREMENTS SHALL BE DETERMINED BY THE CITY ENGINEER.
- [x] SIDEWALK AND WHEELCHAIR RAMPS WITHIN THE CURB RETURNS SHALL BE CONSTRUCTED WHEREVER A NEW CURB RETURN IS CONSTRUCTED.
- [ ] IF CURB IS DEPRESSED FOR A DRIVEPAD, THE DRIVEPAD SHALL BE CONSTRUCTED PRIOR TO ACCEPTANCE OF CURB AND GUTTER.
- [x] ALL STORM DRAINAGE FACILITIES SHALL BE COMPLETED PRIOR TO FINAL ACCEPTANCE.

INDEX TO DRAWINGS

SHEET NO.	SHEET
1	TITLE SHEET
2-3	PLAT
4	GRADING AND DRAINAGE PLAN
5	MASTER PAVING PLAN
6	CALLE FUERTE
7	CALLE MONTANA & VIA DE CALMA
8	VISTA DEL NORTE
9	MASTER UTILITY PLAN
10	CALLE FUERTE
11	CALLE MONTANA & VIA DE CALMA
12	VISTA DEL NORTE WATERLINE
13	WATER DETAIL
14-15	TRAFFIC CONTROL

APPROVED AS RECORD DRAWINGS
DESIGN REVIEW SECTION
CITY CONSTRUCTION ENGINEER
DATE: 1-13-04

CAUTION:
NOTE THAT ALL EXISTING UTILITIES MAY NOT BE SHOWN. ALL EXISTING SERVICE CONNECTIONS ARE NOT SHOWN. ANY EXISTING UTILITIES THAT ARE SHOWN ARE APPROXIMATE LOCATION ONLY. IT SHALL BE THE SOLE RESPONSIBILITY OF THE CONTRACTOR TO CONTACT ALL THE UTILITY OWNERS AND TO CONDUCT ALL NECESSARY FIELD INVESTIGATIONS PRIOR TO ANY EXCAVATIONS TO DETERMINE THE ACTUAL LOCATION OF UTILITIES AND OTHER IMPROVEMENTS.

dmg D. MARK GOODWIN & ASSOCIATES, P.A.
CONSULTING ENGINEERS
P. O. BOX 90606
ALBUQUERQUE, NEW MEXICO 87199
(505) 828-2200, FAX (505) 797-9539

SURVEYOR'S CERTIFICATION

"I, Timothy Aldrich, a duly qualified Registered Professional Land Surveyor under the laws of the State of New Mexico, do hereby certify that the 'as-built' information shown on these drawings was obtained from field construction and 'as-built' surveys performed by me or under my supervision, that the 'as-built' information shown on these drawings was added by me or under my supervision, and that this 'as-built' information is true and correct to the best of my knowledge and belief." Aldrich Land Surveying is not responsible for any of the design concepts, calculations, engineering, or intent of the record drawings.

Timothy Aldrich, P.S. No. 7719 — Date

CERTIFICATE OF SUBSTANTIAL COMPLIANCE ON PLANS

I, Diane Hoelzer, NMPE 11967, of the firm Mark Goodwin & Associates, PA, a Registered Professional Engineer in the State of New Mexico, do hereby certify, to the best of my knowledge and belief, that the infrastructure installed as part of this project has been inspected by me or by a qualified person under my direct supervision, and has been constructed in accordance with the plans and specifications approved by the City Engineer and that the original design intent of the approved plans has been met, except as noted by me on the as-built construction drawings. This Certification is based on site inspections by me or personnel under my direction, and survey information provided by ALS, Inc., NMPS number 7719.

10-29-03

DIANE HOELZER — NEW MEXICO — 11967 — REGISTERED PROFESSIONAL ENGINEER

REV.	SHEETS	CITY ENGINEER	DATE	USER DEPARTMENT	DATE	USER DEPARTMENT	DATE

ENGINEERS STAMP & SIGNATURE

DIANE HOELZER — NEW MEXICO — 11967 — REGISTERED PROFESSIONAL ENGINEER

1-11-03

APPROVALS	ENGINEER	DATE
DRC CHAIRMAN		2-7-03
TRANSPORTATION		1/23/03
WATER/WASTEWATER		1/23/03
HYDROLOGY		1/23/03
CIP		
CONSTR. MNGMT.		
CONSTR. COORD.		2-7-03

APPROVED FOR CONSTRUCTION

2/27/03

CITY ENGINEER — DATE

DRB NO. 1001396

CITY PROJECT NO. 682686

SHEET 1 OF 15

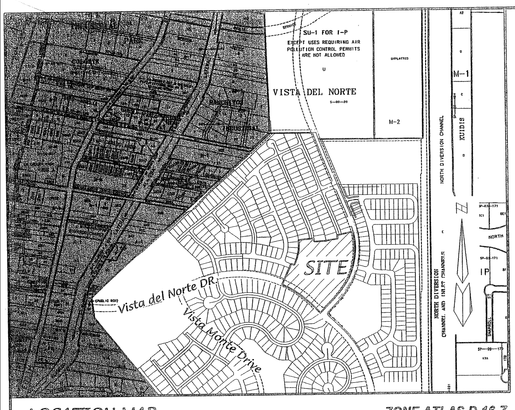

LOCATION MAP

ZONE ATLAS D-16-Z

SCALE: NONE

SUBDIVISION DATA

Plat Case No's. ..... Project #1001396
Case #

Gross acreage	8.70634 AC
Zone Atlas No.	D-16-Z
No. of existing Tracts/Lots	1 TRACTS
No. of Tracts/Lots created	37 LOTS
No. of Tracts/Lots eliminated	1 TRACT
Miles of full width streets created	0.42
Area dedicated to the City of Albuquerque	2.7140 AC
Date of Survey	NOVEMBER, 1998
Utility Control Location System Log Number	99092909100192

FREE CONSENT AND DEDICATION:

The subdivision hereon described is with the free consent and in accordance with the desires of the undersigned owner(s) and/or proprietor(s) thereof and said owner(s) and/or proprietor(s) do hereby dedicate all streets, public right-of-ways shown hereon to the City of Albuquerque in fee simple with warranty covenants and do hereby grant: all access, utility and drainage easements shown hereon including the right to construct, operate, inspect, and maintain facilities therein; and all public utility easements shown hereon for the common and joint use of gas, electrical power and communication services for buried distribution lines, conduits, and pipes for underground utilities where shown or indicated, and including the right of ingress and egress for construction and maintenance, and the right to trim interfering trees and shrubs. Said owner(s) and/or proprietor(s) do hereby consent to all of the foregoing and do hereby certify that this subdivision is their free act and deed. Said owners(s) warrant that they hold among them complete and indefeasible title to the land subdivided.

VISTA DEL NORTE DEVELOPMENT, LLC:
BY: JOHN A. MYERS, ASSISTANT MANAGER PRO TEM:

JOHN A. MYERS, ASSISTANT MANAGER PRO TEM — DATE

OWNER'S ACKNOWLEDGMENT

STATE OF NEW MEXICO
SS
COUNTY OF BERNALILLO

This instrument was acknowledged before me on _____
By John A. Myers, Assistant Manager pro tem Vista Del Norte Development, LLC
A New Mexico company on behalf of said company

NOTARY PUBLIC — MY COMMISSION EXPIRES

LEGAL DESCRIPTION

A Tract of land situate within the Elena Gallegos Grant, Projected Section 22, Township 11 North, Range 3 East, New Mexico Principal Meridian, City of Albuquerque, Bernalillo County, New Mexico Being all of Tract T-2-A-1-A-1-A-1 Valle grande Del Norte Subdivision as the same is shown and designated on said plat filed for record in the office of the county clerk of Bernalillo County, New Mexico on _____ in Book 2003C, Page ___ and containing 8.7064 Acres.

NOTES

1. Bearings are New Mexico State Plane Grid Bearings (Central Zone).
2. Distances are ground distances.
3. Bearings and distances are field and record.
4. Basis of boundary are the following plats (and documents) of record entitled:

   PLAT FOR "VALLE GRANDE DEL NORTE SUBDIVISION UNIT 1 (_____)
   PLAT FOR "MESETA DEL NORTE SUBDIVISION UNIT 2" (_____)
   PLAT FOR "MESETA DEL NORTE SUBDIVISION" (05-16-02, 2002C-173)
   BULK PLAT FOR "TRACTS T-2-A-1-A, T-2-A-1-B, T-2-A-1-C, T-2-A-1-D, T-3-A, AND T-3-B, VISTA DEL NORTE SUBDIVISION",(01-20-02, 2002C-31)
   PLAT FOR "TRACTS T-2-A-1, T-2-A-2 VISTA DEL NORTE SUBDIVISION", (06-19-01, 2001C-171)
   PLAT FOR "TRACTS T-2-A, T-2-B VISTA DEL NORTE SUBDIVISION", (02-22-01, 2001C-58)
   PLAT FOR "VISTA DEL NORTE", (03-16-99, 99C-57) PLAT FOR "VILLA DEL NORTE SUBDIVISION", (07-23-99, 99C-205)
   PLAT FOR "LOS PRADOS DEL NORTE SUBDIVISION", (08-18-99, 99C-233)
   PLAT FOR "TRACTS T-1, T-2, T-3 & T-4 VISTA DEL NORTE SUBDIVISION", (12-10-99, 99C-331)
   all being records of Bernalillo County, New Mexico.
5. Field Survey performed November, 1998.
6. Unless otherwise noted all point are SET 5/8" REBAR WITH CAP "ALS LS 7719" (TYP).
7. The City has the right to enter upon the grantors property at any time and perform whatever inspection, installation, maintenance, repair modification or removal ("work") it deems appropriate without liability to the city. If the work effects any improvements or encroachments made by the grantor, the city will not be financially or otherwise responsible for rebuilding or repairing of improvements or encroachments . If in the opinion of the city, the work to be performed by the city could endanger the structural integrity or otherwise damage the improvements or encroachments, the grantor shall, at its own expense, take whatever protective measures are required to safeguard the improvements or encroachments.

PURPOSE OF PLAT

1. Subdivide T-2-A-1-A-1-A-1, Valle grande Del Norte Subdivision into 37 Lots.
2. Grant easements as shown.
3. Dedicate right-of-way as shown.

SCANNED BY MESA REPRO

PLAT FOR
VALLE GRANDE DEL NORTE
SUBDIVISION UNIT 2
WITHIN THE
ELENA GALLEGOS GRANT
PROJECTED SECTIONS 22 AND 27
TOWNSHIP 11 NORTH, RANGE 3 EAST, NMPM
CITY OF ALBUQUERQUE
BERNALILLO COUNTY, NEW MEXICO
JANUARY, 2003

APPROVED AND ACCEPTED BY:

APPROVAL AND CONDITIONAL ACCEPTANCE as specified by the Albuquerque subdivision Ordinance, Chapter 14 Article 14 of the Revised Ordinances of Albuquerque, New Mexico, 1994.

DRB Project No. 1001396

Application No._____

Planning Director, City of Albuquerque, N.M. — Date

City Engineer, City of Albuquerque, N.M. — Date

Albuquerque Metropolitan Arroyo Flood Control Authority — Date

Transportation Development, City of Albuquerque, N.M. — Date

Utility Development Division, City of Albuquerque, N.M. — Date

Parks and Recreation — Date

City Surveyor, City of Albuquerque, N.M. — Date

Property Management, City of Albuquerque, N.M. — Date

PNM Gas — Date

PNM Electric — Date

Qwest Telecommunications — Date

Comcast Cable — Date

SURVEYOR'S CERTIFICATION

"I, Timothy Aldrich, a duly qualified Registered Professional Land Surveyor under the laws of the State of New Mexico, do hereby certify that this plat and description were prepared by me or under my supervision, shows all easements as shown on the plat of record or made known to me by the owners and/or proprietors of the subdivision shown hereon, utility companies and other parties expressing an interest and meets the minimum requirements for monumentation and surveys of the Albuquerque Subdivision Ordinance, and further meets the Minimum Standards for Land Surveying in the State of New Mexico, and is true and correct to the best of my knowledge and belief."

Timothy Aldrich P.S. No. 7719 — Date

Dwg: COVER.dwg	Drawn: STEPHEN	Checked: ALS	Sheet 1 of 4
Scale: 1"=1"	Date: 01/08/03	Job: A01005	

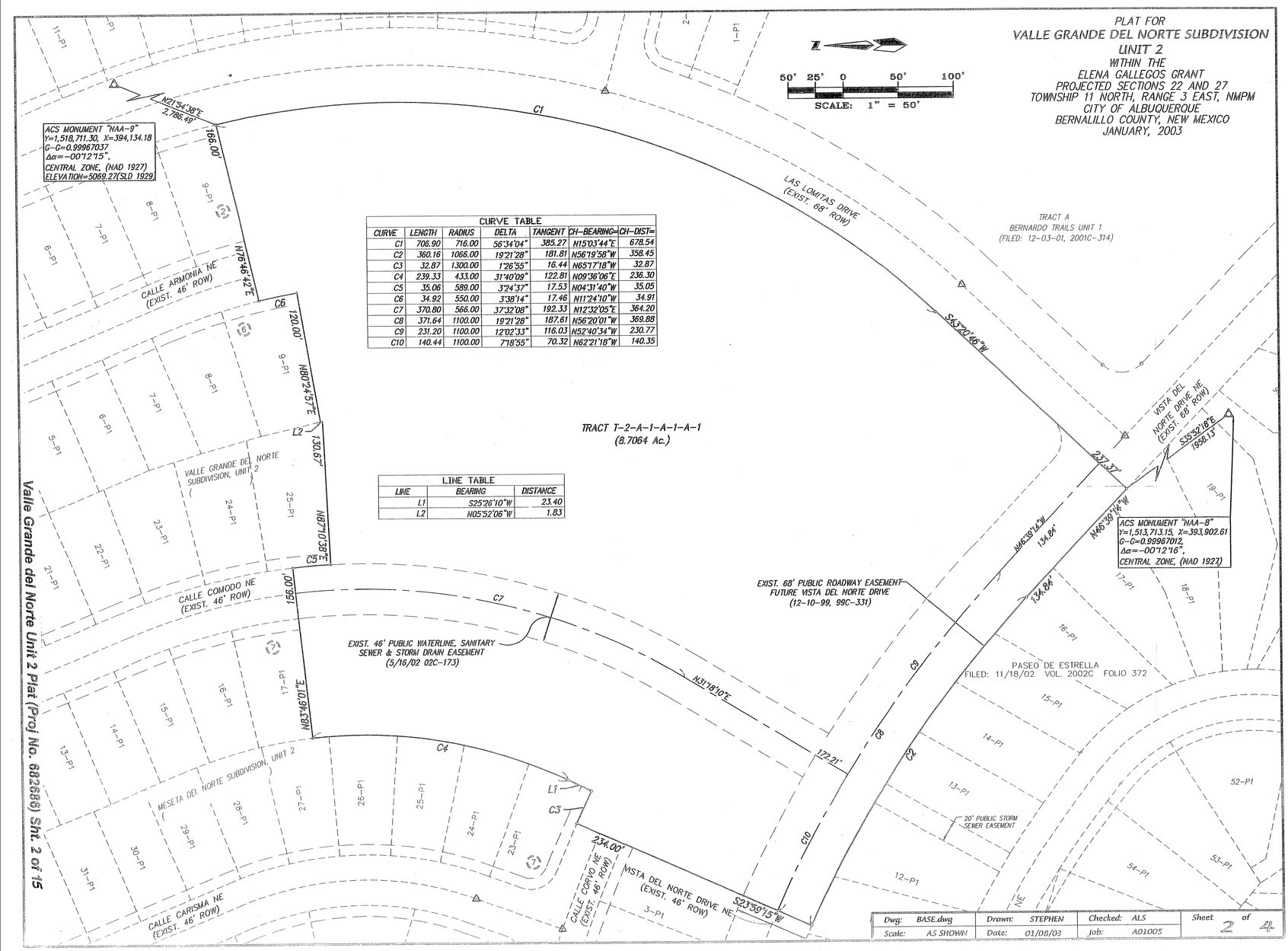

CURVE TABLE

CURVE	LENGTH	RADIUS	DELTA	TANGENT	CH-BEARING=	CH-DIST=
C1	706.90	716.00	56°34'04"	385.27	N15°03'44"E	678.54
C2	360.16	1066.00	19°21'28"	181.81	N56°19'58"W	358.45
C3	32.87	1300.00	1°26'55"	16.44	N65°17'18"W	32.87
C4	239.33	433.00	31°40'09"	122.81	N09°36'06"E	236.30
C5	35.06	589.00	3°24'37"	17.53	N04°31'40"W	35.05
C6	34.92	550.00	3°38'14"	17.46	N11°24'10"W	34.91
C7	370.80	566.00	37°32'08"	192.33	N12°32'05"E	364.20
C8	371.64	1100.00	19°21'28"	187.61	N56°20'01"W	369.88
C9	231.20	1100.00	12°02'33"	116.03	N52°40'34"W	230.77
C10	140.44	1100.00	7°18'55"	70.32	N62°21'18"W	140.35

LINE TABLE

LINE	BEARING	DISTANCE
L1	S25°26'10"W	23.40
L2	N05°52'06"W	1.83

Dwg: BASE.dwg	Drawn: STEPHEN	Checked: ALS	Sheet 2 of 4
Scale: AS SHOWN	Date: 01/08/03	Job: A01005	

SCANNED BY MESA REPRO

PLAT FOR VALLE GRANDE DEL NORTE SUBDIVISION UNIT 2

WITHIN THE
ELENA GALLEGOS GRANT
PROJECTED SECTIONS 22 AND 27
TOWNSHIP 11 NORTH, RANGE 3 EAST, NMPM
CITY OF ALBUQUERQUE
BERNALILLO COUNTY, NEW MEXICO
JANUARY, 2003

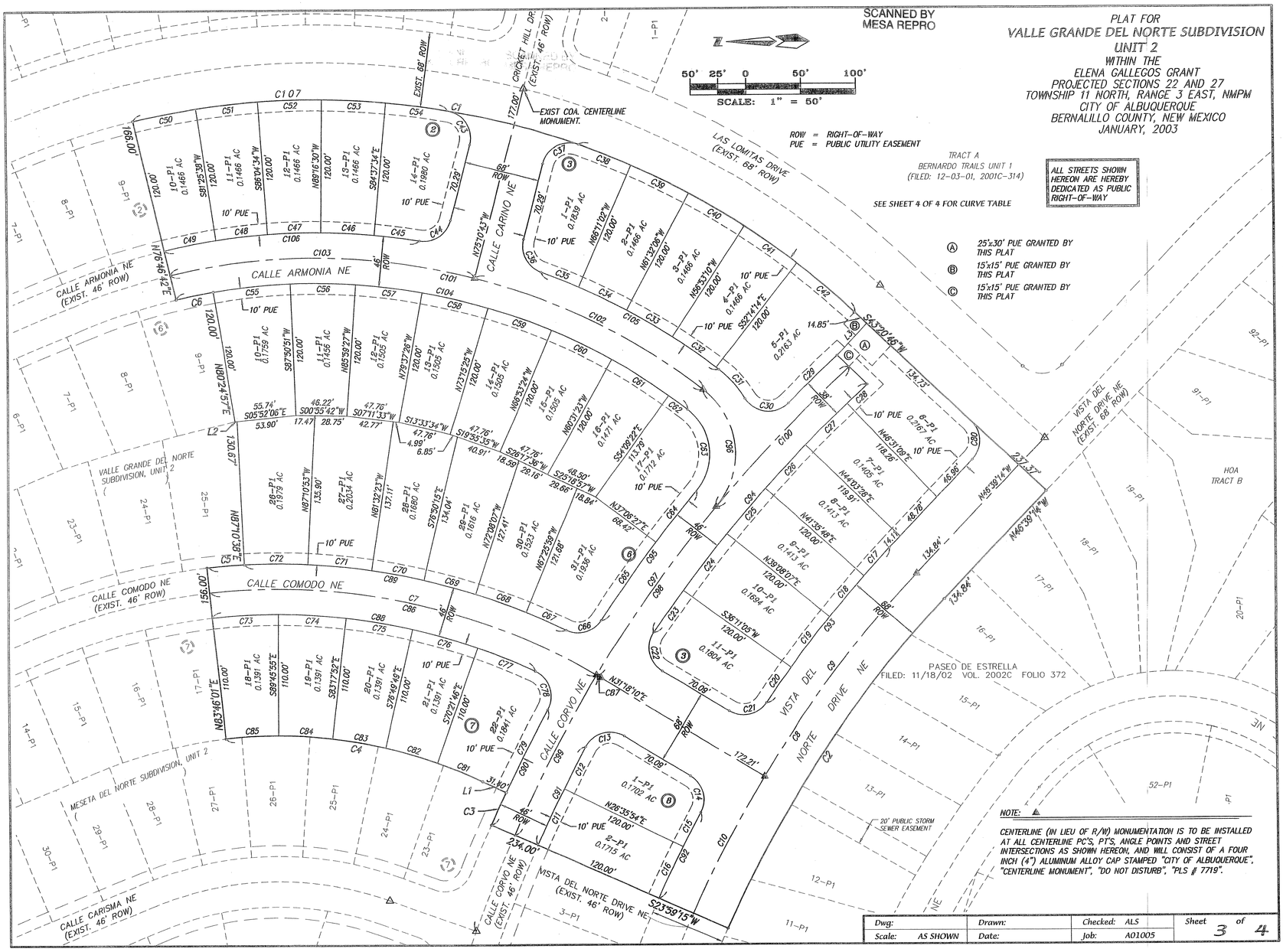

NOTE:

CENTERLINE (IN LIEU OF R/W) MONUMENTATION IS TO BE INSTALLED AT ALL CENTERLINE PC'S, PT'S, ANGLE POINTS AND STREET INTERSECTIONS AS SHOWN HEREON, AND WILL CONSIST OF A FOUR INCH (4") ALUMINUM ALLOY CAP STAMPED "CITY OF ALBUQUERQUE", "CENTERLINE MONUMENT", "DO NOT DISTURB", "PLS # 7719".

Dwg:	Drawn:	Checked: ALS	Sheet 3 of 4
Scale: AS SHOWN	Date:	Job: A01005	

CURVE TABLE

CURVE	LENGTH	RADIUS	DELTA	TANGENT	CH-BEARING	CH-DIST
C1	706.90	716.00	56°34'04"	385.27	N15°03'44"E	678.54
C2	380.16	1066.00	19°21'28"	181.81	N56°19'56"W	358.45
C3	32.87	1300.00	1°26'55"	16.44	N65°17'18"W	32.87
C4	239.33	433.00	31°40'09"	122.81	N09°36'06"E	236.30
C5	35.06	589.00	3°24'37"	17.53	N04°31'40"W	35.05
C6	34.92	550.00	3°38'14"	17.46	N11°24'10"W	34.91
C7	370.80	566.00	37°32'08"	192.33	N12°32'05"E	364.20
C8	371.64	1100.00	19°21'28"	187.61	N56°20'01"W	369.88
C9	231.20	1100.00	12°02'33"	116.03	N52°40'34"W	230.77
C10	140.44	1100.00	7°18'55"	70.32	N62°21'18"W	140.35
C11	57.14	1254.00	2°36'39"	28.58	N64°42'26"W	57.14
C12	42.74	1254.00	1°57'10"	21.37	N62°25'31"W	42.74
C13	40.47	25.00	92°45'06"	26.23	N15°04'23"W	36.19
C14	38.00	25.00	87°04'55"	23.76	N74°50'37"E	34.44
C15	35.36	1134.00	1°47'11"	17.68	N62°30'31"W	35.36
C16	51.67	1134.00	2°36'39"	25.84	N64°42'26"W	51.67
C17	34.61	1134.00	1°44'55"	17.31	N47°31'45"W	34.61
C18	48.71	1134.00	2°27'40"	24.36	N49°38'02"W	48.71
C19	58.40	1134.00	2°57'03"	29.21	N52°20'24"W	58.39
C20	38.87	1134.00	1°57'51"	19.44	N54°47'50"W	38.87
C21	38.00	25.00	87°04'55"	23.76	S12°14'18"E	34.44
C22	40.47	25.00	92°45'06"	26.23	S77°40'43"W	36.19
C23	46.63	1254.00	2°07'49"	23.32	N54°52'50"W	46.62
C24	64.58	1254.00	2°57'03"	32.30	N52°20'24"W	64.57
C25	53.87	1254.00	2°27'40"	26.94	N49°38'02"W	53.86
C26	53.87	1254.00	2°27'40"	26.94	N47°10'22"W	53.86
C27	53.87	1254.00	2°27'40"	26.94	N44°42'41"W	53.86
C28	25.46	1254.00	1°09'49"	12.73	N42°53'57"W	25.46
C29	102.43	1292.00	4°32'33"	51.24	N42°56'08"W	102.40
C30	45.37	25.00	103°58'59"	31.99	S06°47'06"W	39.40
C31	35.45	98.00	20°43'24"	17.92	N48°24'53"E	35.25
C32	48.36	596.00	4°38'56"	24.19	N35°26'18"E	48.34
C33	48.36	596.00	4°38'56"	24.19	N30°47'22"E	48.34
C34	48.36	596.00	4°38'56"	24.19	N26°08'26"E	48.34
C35	36.88	596.00	3°32'42"	18.44	N22°02'37"E	36.87
C36	36.89	25.00	84°33'00"	22.73	S62°32'46"W	33.63
C37	41.41	25.00	94°53'47"	27.23	N27°43'50"W	36.83
C38	51.22	716.00	4°05'54"	25.62	N21°46'01"E	51.21
C39	58.09	716.00	4°38'56"	29.06	N26°08'26"E	58.08
C40	58.09	716.00	4°38'56"	29.06	N30°47'22"E	58.08
C41	58.09	716.00	4°38'56"	29.06	N35°26'18"E	58.08
C42	69.77	716.00	5°35'00"	34.91	N40°33'16"E	69.75
C43	41.41	25.00	94°53'59"	27.23	N57°22'17"E	36.83
C44	36.89	25.00	84°32'47"	22.73	S32°54'20"E	33.63
C45	41.54	596.00	3°59'38"	20.78	N07°22'15"E	41.54
C46	48.36	596.00	4°38'56"	24.19	N03°02'58"E	48.34
C47	48.36	596.00	4°38'56"	24.19	N01°35'58"W	48.34
C48	48.36	596.00	4°38'56"	24.19	N06°14'54"W	48.34
C49	48.36	596.00	4°38'56"	24.19	N10°53'50"W	48.34
C50	58.09	716.00	4°38'56"	29.06	N10°53'50"W	58.08
C51	58.09	716.00	4°38'56"	29.06	N06°14'54"W	58.08
C52	58.09	716.00	4°38'56"	29.06	N01°35'58"W	58.08
C53	58.09	716.00	4°38'56"	29.06	N03°02'58"E	58.08
C54	56.83	716.00	4°32'52"	28.43	N07°38'52"E	56.82
C55	71.34	550.00	7°25'54"	35.72	N05°52'06"W	71.29
C56	59.15	550.00	6°09'42"	29.60	N00°55'42"E	59.12
C57	61.12	550.00	6°22'01"	30.59	N07°11'33"E	61.09
C58	61.12	550.00	6°22'01"	30.59	N13°33'34"E	61.09
C59	61.12	550.00	6°22'01"	30.59	N19°55'35"E	61.09
C60	61.12	550.00	6°22'01"	30.59	N26°17'36"E	61.09
C61	61.12	550.00	6°22'01"	30.59	N32°39'37"E	61.09
C62	21.21	550.00	2°12'34"	10.61	N36°56'55"E	21.21
C63	83.20	52.00	91°40'32"	53.54	N83°53'22"E	74.61
C64	59.47	1300.00	2°37'16"	29.74	N51°34'55"W	59.47
C65	86.77	1300.00	3°49'27"	43.40	N54°48'16"W	86.75
C66	36.29	25.00	83°09'40"	22.18	S15°08'10"E	33.18
C67	39.60	589.00	3°52'17"	19.81	N24°30'31"E	39.79
C68	48.34	589.00	4°42'08"	24.18	N20°12'57"E	48.33
C69	48.28	589.00	4°41'46"	24.15	N15°31'00"E	48.26
C70	48.34	589.00	4°42'08"	24.18	N10°48'41"E	48.33
C71	57.99	589.00	5°38'29"	29.02	N05°38'22"E	57.97
C72	57.99	589.00	5°38'29"	29.02	N00°00'07"W	57.97
C73	61.29	543.00	6°28'03"	30.68	N02°59'57"W	61.26
C74	61.29	543.00	6°28'03"	30.68	N03°28'06"E	61.26
C75	61.29	543.00	6°28'03"	30.68	N09°56'09"E	61.26
C76	61.29	543.00	6°28'03"	30.68	N16°24'13"E	61.26
C77	56.14	543.00	5°55'24"	28.09	N22°39'57"E	56.11
C78	40.82	25.00	93°33'12"	26.60	N72°20'15"E	36.43
C79	83.45	1300.00	3°40'41"	41.74	N82°43'30"W	83.44
C80	39.27	25.00	90°00'00"	25.00	S88°20'46"W	35.36

CURVE TABLE

CURVE	LENGTH	RADIUS	DELTA	TANGENT	CH-BEARING	CH-DIST
C81	43.82	433.00	5°47'56"	21.93	N22°32'12"E	43.80
C82	48.88	433.00	6°28'03"	24.46	N16°24'13"E	48.85
C83	48.88	433.00	6°28'03"	24.46	N09°56'09"E	48.85
C84	48.88	433.00	6°28'03"	24.46	N03°28'06"E	48.85
C85	48.88	433.00	6°28'03"	24.46	N02°59'57"W	48.85
C86	365.15	566.00	36°57'48"	189.18	N12°20'09"E	358.85
C87	4.79	566.00	0°29'06"	2.40	N31°03'37"E	4.79
C88	301.31	543.00	31°47'37"	154.65	N09°39'50"E	297.46
C89	334.20	589.00	32°30'35"	171.73	N10°11'22"E	329.74
C90	116.32	1300.00	5°07'36"	58.20	N63°26'57"W	116.28
C91	99.88	1254.00	4°33'49"	49.97	N63°43'51"W	99.86
C92	87.03	1134.00	4°23'50"	43.54	N63°48'50"W	87.01
C93	180.59	1134.00	9°07'28"	90.49	N51°13'01"W	180.40
C94	298.27	1254.00	13°37'42"	149.84	N49°07'54"W	297.57
C95	146.24	1300.00	6°26'43"	73.20	N53°28'38"W	146.16
C96	120.00	75.00	91°40'32"	77.23	N83°53'22"E	107.61
C97	526.37	1277.00	23°37'01"	266.98	N54°12'15"W	522.65
C98	187.82	1277.00	8°25'37"	94.08	N54°29'05"W	187.65
C99	163.02	1277.00	7°18'52"	81.62	N62°21'20"W	162.91
C100	175.53	1277.00	7°52'32"	87.90	N46°20'01"W	175.39
C101	512.79	573.00	51°16'29"	275.00	N12°24'57"E	495.84
C102	232.36	573.00	23°14'02"	117.80	N26°26'10"E	230.77
C103	280.43	573.00	28°02'27"	143.08	N00°47'56"E	277.64
C104	492.20	550.00	51°16'29"	263.96	N12°24'57"E	475.94
C105	184.97	596.00	17°46'55"	93.24	N29°09'44"E	184.23
C106	234.98	596.00	22°35'21"	119.03	N01°55'37"W	233.46
C107	289.21	716.00	23°08'35"	146.60	N01°39'00"W	287.25
C108	295.27	716.00	23°37'42"	149.77	N31°31'55"E	293.19

LINE TABLE

LINE	BEARING	DISTANCE
L1	S25°26'10"W	23.40
L2	N05°52'06"W	1.83
L3	N43°20'46"E	40.00

PUBLIC UTILITY EASEMENTS shown on this plat are granted for the common and joint use of :

1. The PNM Electric Services Division for the installation, maintenance and service of overhead and underground electrical lines, transformers, poles and any other equipment, fixtures, structures and related facilities reasonably necessary to provide electrical services.

2. The PNM Gas Services Division for installation, maintenance and services of natural gas lines, valves and other equipment and facilities reasonably necessary to provide natural gas.

3. Qwest for installation, maintenance and service of all buried and aerial communication lines and other related equipment and facilities reasonably necessary to provide communication services, including but not limited to above ground pedestals and closures.

4. Comcast cable for installation, maintenance and service of such lines, cable and other related equipment and facilities reasonably necessary to provide Cable TV service. Included, is the right to build, rebuild, construct, reconstruct, locate, relocate, change, remove, modify, renew, operate and maintain facilities for the purposes described above, together with free access to, from and over said easement, including sufficient working area space for electric transformers, with the right and privilege to trim and remove trees, shrubs or bushes which interfere with the purposes set forth herein. No building, sign, pool (above ground or subsurface), hot tub, concrete or wood pool decking, or other structure shall be erected or constructed on said easements, nor shall any well be drilled or operated thereon. Property owners shall be solely responsible for correcting any violations of National Electrical Safety Code caused by construction of pools, decking or any structures adjacent to within or near easements shown on this plat.

In approving this plat, the utility companies did not conduct a Title Search of the properties shown hereon. Consequently, the utility companies do not waive or release any easement or easement rights which may have been granted by prior plat, replat or other document and which are not shown on this plat. Easements for electric transformers/switchgears, as installed, shall extend ten feet (10') in front of transformer/switchgear doors and five feet (5') on each side.

Dwg:	Drawn:	Checked: ALS	Sheet 4 of 4
Scale: AS SHOWN	Date:	Job: A01005	

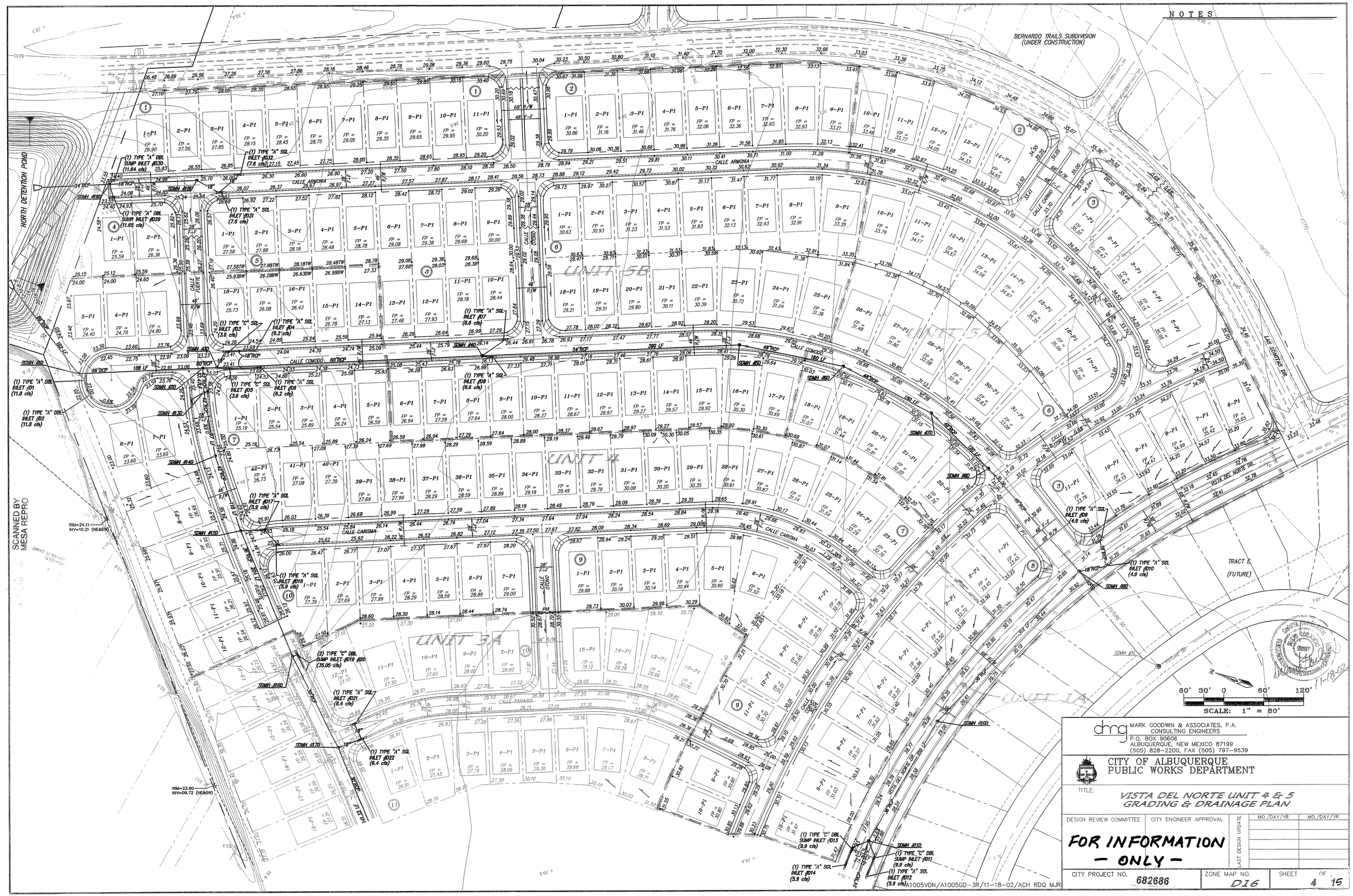
NOTES
BERNARDO TRAILS SUBDIVISION (UNDER CONSTRUCTION)
NORTH DETENTION POND
CALLE ARMONIA
CALLE COMODO
CALLE CARISMA
CALLE PARAISO
CALLE FUERTE
CALLE DIVINO
CALLE CARINO
LAS TONTAS DR.
VISTA DEL NORTE DR.
TRACT E (FUTURE)
UNIT 5B
UNIT 5A
UNIT 4
UNIT 3A
UNIT 1A
(1) TYPE "A" DBL SUMP INLET #D30 (11.84 cfs)
(1) TYPE "A" SGL INLET #D32 (7.6 cfs)
(1) TYPE "A" DBL SUMP INLET #D29 (11.65 cfs)
(1) TYPE "A" SGL INLET #D31 (7.6 cfs)
(1) TYPE "A" DBL INLET #D1 (11.8 cfs)
(1) TYPE "A" DBL INLET #D2 (11.8 cfs)
(1) TYPE "C" SGL INLET #D3 (3.6 cfs)
(1) TYPE "A" SGL INLET #D4 (6.2 cfs)
(1) TYPE "C" SGL INLET #D5 (3.6 cfs)
(1) TYPE "A" SGL INLET #D6 (6.2 cfs)
(1) TYPE "A" SGL INLET #D7 (6.6 cfs)
(1) TYPE "A" SGL INLET #D8 (6.6 cfs)
(1) TYPE "A" SGL INLET #D17 (5.9 cfs)
(1) TYPE "A" SGL INLET #D18 (5.9 cfs)
(2) TYPE "C" DBL SUMP INLET #D19 #D20 (35.05 cfs)
(1) TYPE "A" SGL INLET #D21 (6.4 cfs)
(1) TYPE "A" SGL INLET #D22 (6.4 cfs)
(1) TYPE "A" SGL INLET #D9 (4.9 cfs)
(1) TYPE "A" SGL INLET #D10 (4.9 cfs)
(1) TYPE "C" DBL SUMP INLET #D13 (9.9 cfs)
(1) TYPE "C" DBL SUMP INLET #D11 (9.9 cfs)
(1) TYPE "A" SGL INLET #D12 (5.9 cfs)
(1) TYPE "A" SGL INLET #D14 (5.9 cfs)
SCANNED BY MESA REPRO
RIM=24.11 INV=10.21 (NE&SW)
RIM=23.90 INV=09.72 (NE&SW)
60' 30' 0 60' 120'
SCALE: 1" = 60'
MARK GOODWIN & ASSOCIATES, P.A.
CONSULTING ENGINEERS
P.O. BOX 90606
ALBUQUERQUE, NEW MEXICO 87199
(505) 828-2200, FAX (505) 797-9539
CITY OF ALBUQUERQUE
PUBLIC WORKS DEPARTMENT
TITLE:
VISTA DEL NORTE UNIT 4 & 5
GRADING & DRAINAGE PLAN
DESIGN REVIEW COMMITTEE
CITY ENGINEER APPROVAL
LAST DESIGN UPDATE
MO./DAY/YR.
MO./DAY/YR.
FOR INFORMATION
— ONLY —
CITY PROJECT NO.
682686
ZONE MAP NO.
D16
SHEET
4
OF
15
A1005VDN/A1005GD-3R/11-18-02/ACH RDQ MJR

TYPICAL 48' SECTION WITH MEDIAN A-A

NTS

TYPICAL 28' F-F RESIDENTIAL STREET SECTION B-B

NTS

TYPICAL 24' F-F RESIDENTIAL STREET SECTION C-C

NTS

TYPICAL DRIVEWAY DETAIL

NTS

CURB OPENING PER THIS PROJECT. DRIVE PAD BY HOME BUILDER PER COA STD. DWG. 2425.

CONSTRUCTION NOTES

1. ALL 4' VALLEY GUTTERS PER CITY OF ALBUQUERQUE STANDARD DRAWING 2421 AT KNUCKLES.
2. ALL 6' VALLEY GUTTERS PER CITY OF ALBUQUERQUE STANDARD DRAWING 2420 AT ALL INTERSECTIONS.
3. TRANSITION FROM MOUNTABLE CURB TO STANDARD CURB SHALL BE 10' PER COA STANDARD DRAWING 2418.
4. TRANSITION SECTION FROM FULL CROWN TO NO CROWN TO BE A MINIMUM OF 50', PER CITY OF ALBUQUERQUE STANDARD DRAWING 2401.
5. ALL SIDEWALKS PER COA STANDARD DRAWING 2430.
6. ALL CURB & GUTTER PER COA STD. DWG 2415.
7. WHEELCHAIR RAMPS PER COA STD. DWG 2441, CASE I SEE DETAIL AND NOTE THIS SHEET
8. ALL 4' INTERIOR SIDEWALKS ARE DEFERRED.

CERTIFICATE OF SUBSTANTIAL COMPLIANCE ON PLANS

I, Diane Hoelzer, NMPE 11967, of the firm Mark Goodwin & Associates, PA, a Registered Professional Engineer in the State of New Mexico, do hereby certify, to the best of my knowledge and belief, that the infrastructure installed as part of this project has been inspected by me or by a qualified person under my direct supervision, and has been constructed in accordance with the plans and specifications approved by the City Engineer and that the original design intent of the approved plans has been met, except as noted by me on the as-built construction drawings. This Certification is based on site inspections by me or personnel under my direction, and survey information provided by ALS, Inc., NMPS number 7719.

Diane Hoelzer 10-29-03

DIANE HOELZER NEW MEXICO 11967 REGISTERED PROFESSIONAL ENGINEER

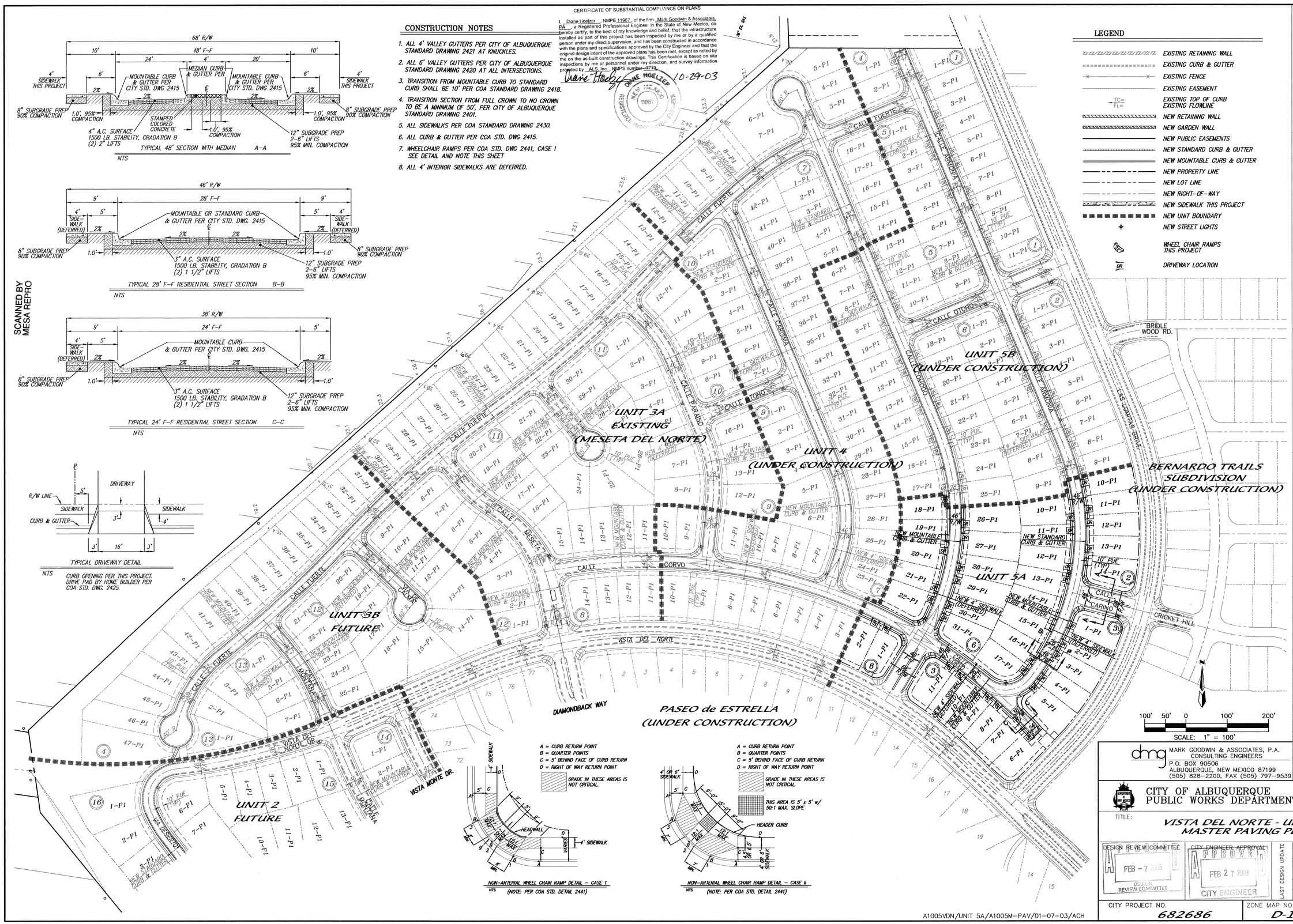

NON-ARTERIAL WHEEL CHAIR RAMP DETAIL – CASE I

NTS (NOTE: PER COA STD. DETAIL 2441)

NON-ARTERIAL WHEEL CHAIR RAMP DETAIL – CASE II

NTS (NOTE: PER COA STD. DETAIL 2441)

A1005VDN/UNIT 5A/A1005M-PAV/01-07-03/ACH

AS BUILT INFORMATION

CONTRACTOR	Sundance	DATE 03
WORK STAKED BY	ALS	DATE 8/03
INSPECTOR'S ACCEPTANCE BY	DMG	DATE 03
FIELD VERIFICATION BY	ALS	DATE 03
DRAWINGS CORRECTED BY	ALS	DATE 8-03

BENCH MARKS

ACS BRASS CAP STAMPED "NM4-9"
LOCATED IN SOUTHEAST QUADRANT OF PASEO DEL NORTE & NORTH DIVERSION CHANNEL INTERSECTION.
GEOGRAPHIC POSITION (NAD 1927), IN FEET
N.M. STATE PLANE COORDINATES (CENTRAL ZONE)
X = 394,134.18 Y = 1,518,711.30
ELEVATION = 5069.27 (NGVD 1929), IN FEET

MICRO-FILM INFORMATION

RECORDED BY DATE
NO.

SURVEY INFORMATION

FIELD NOTES

NO.	BY	DATE

ENGINEER'S SEAL

DIANE HOELZER NEW MEXICO 11967 REGISTERED PROFESSIONAL ENGINEER 10-11-03

NO.	DATE	REMARKS	BY
		REVISIONS	

		DATE
DESIGNED BY	DLH	12/01
DRAWN BY	NHM	12/01
CHECKED BY	DMG	12/01

dmg MARK GOODWIN & ASSOCIATES, P.A.
CONSULTING ENGINEERS
P.O. BOX 90606
ALBUQUERQUE, NEW MEXICO 87199
(505) 828-2200, FAX (505) 797-9539

CITY OF ALBUQUERQUE
PUBLIC WORKS DEPARTMENT

TITLE:

VISTA DEL NORTE - UNIT 5A MASTER PAVING PLAN

DESIGN REVIEW COMMITTEE	CITY ENGINEER APPROVAL	LAST DESIGN UPDATE	MO./DAY/YR.	MO./DAY/YR.
FEB - 7 2003 DESIGN REVIEW COMMITTEE	APPROVED FEB 27 2003 CITY ENGINEER			

CITY PROJECT NO.	ZONE MAP NO.	SHEET	OF
682686	D-16	5	15

SCANNED BY MESA REPRO
F:\A01JOBS\A1005VDN\Unit5a\A1005M-PAV.dwg Fri Jan 24 12:07:49 2003 D. MARK GOODWIN & ASSOCIATES. PLOTTED BY: ACH

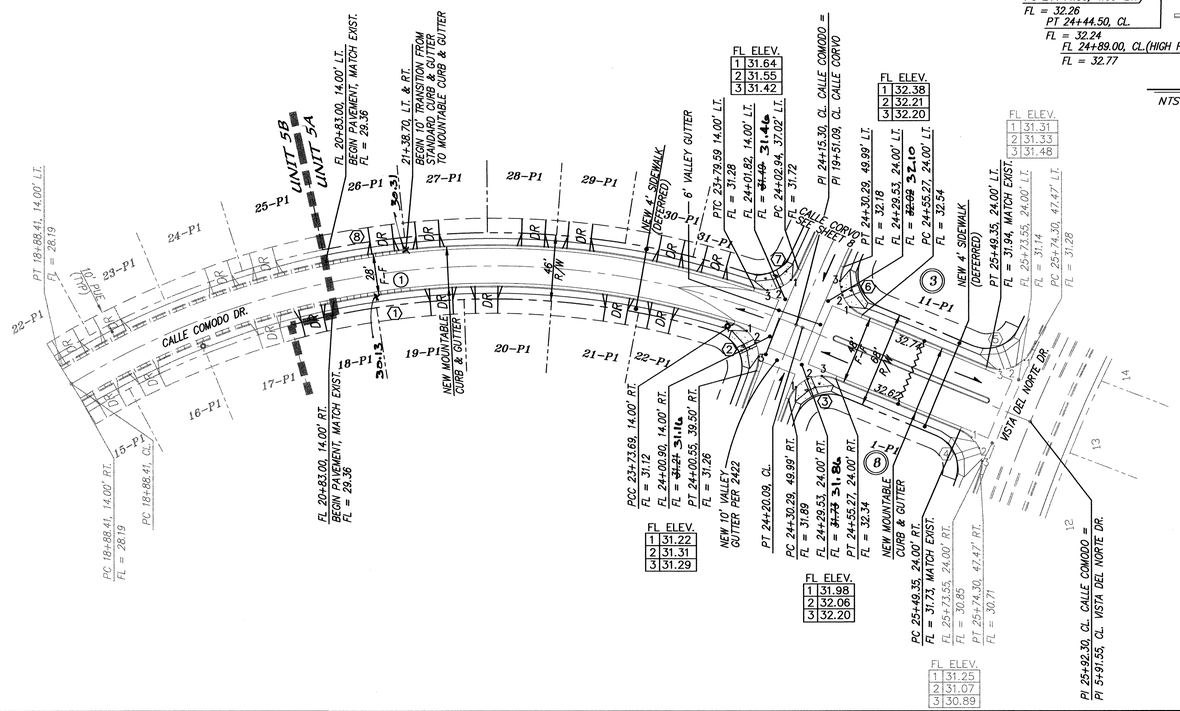

CALLE COMODO
STA. 19+10.41 TO STA. 25+92.30
SCALE: HORZ. 1" = 50'
VERT. 1" = 10'

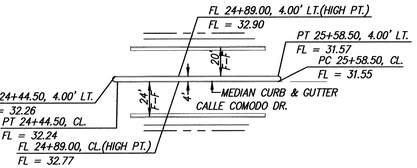

MEDIAN DETAIL
NTS

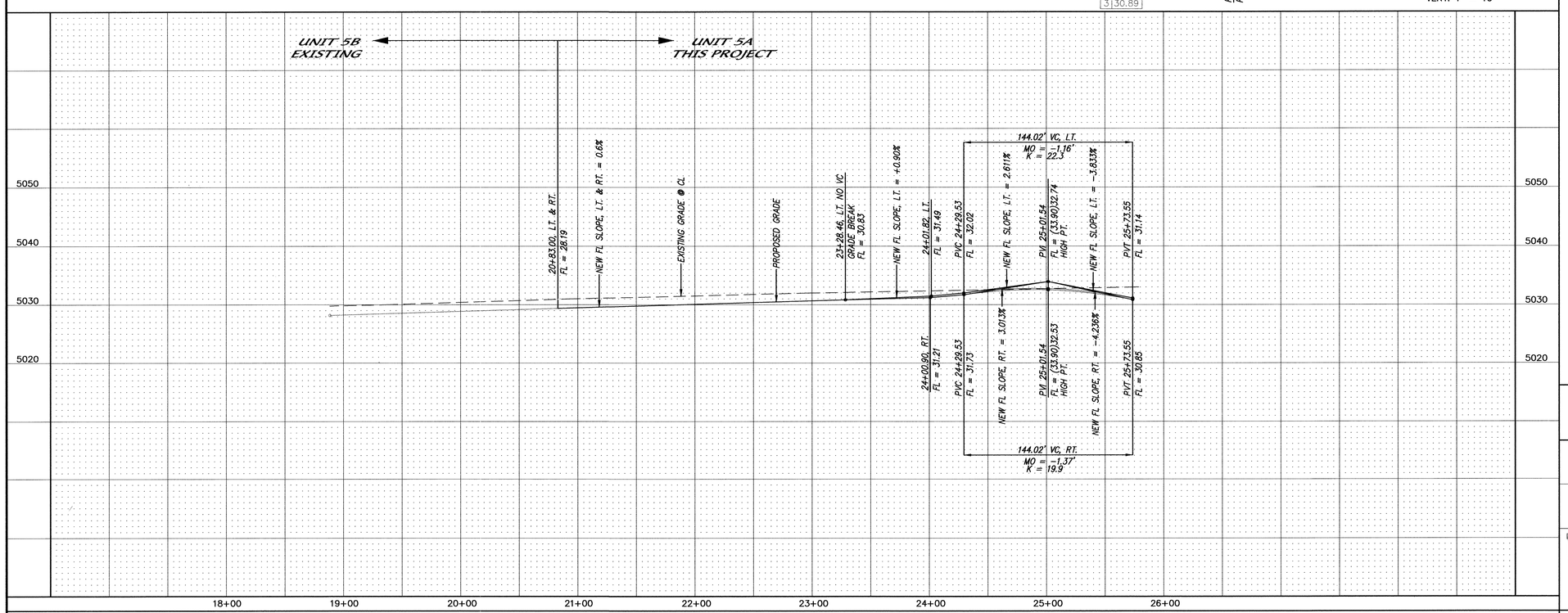

A1005VDN/UNIT 5A/A1005PP-8/01-07-03/ACH

NOTES

1. ALL STATIONING IS CENTERLINE STATIONING.

CURVE DATA – DESCRIBES FACE OF CURB

① Δ = 49°33'35"
R = 552.00'
L = 477.47'
T = 254.82'

② Δ = 92°29'43"
R = 25.00'
L = 40.36'
T = 26.11'

③ Δ = 92°16'06"
R = 25.00'
L = 40.26'
T = 26.01'

④ Δ = 86°30'07"
R = 25.00'
L = 37.74'
T = 23.52'

⑤ Δ = 86°28'55"
R = 25.00'
L = 37.73'
T = 23.51'

⑥ Δ = 86°28'55"
R = 25.00'
L = 40.26'
T = 26.01'

⑦ Δ = 84°16'08"
R = 25.00'
L = 36.77'
T = 22.62'

⑧ Δ = 49°43'18"
R = 580.00'
L = 503.33'
T = 268.75'

CURVE DATA – DESCRIBES CENTERLINE

① Δ = 53°49'19"
R = 566.00'
L = 531.68'
T = 287.28'

CERTIFICATE OF SUBSTANTIAL COMPLIANCE ON PLANS

I, Diane Hoelzer, NMPE 11967, of the firm Mark Goodwin & Associates, PA, a Registered Professional Engineer in the State of New Mexico, do hereby certify, to the best of my knowledge and belief, that the infrastructure installed as part of this project has been inspected by me or by a qualified person under my direct supervision, and has been constructed in accordance with the plans and specifications approved by the City Engineer and that the original design intent of the approved plans has been met, except as noted by me on the as-built construction drawings. This Certification is based on site inspections by me or personnel under my direction, and survey information provided by ALS, Inc., NMPS number 7719.

Diane Hoelzer 10-29-03

DIANE HOELZER NEW MEXICO 11967 REGISTERED PROFESSIONAL ENGINEER

dmg MARK GOODWIN & ASSOCIATES, P.A.
CONSULTING ENGINEERS
P.O. BOX 90606
ALBUQUERQUE, NEW MEXICO 87199
(505) 828-2200, FAX (505) 797-9539

AS BUILT INFORMATION

CONTRACTOR	Sundance	
STAKED BY	PLS	DATE 03
INSPECTOR'S ACCEPTANCE BY	DMG	DATE 8/03
FIELD VERIFICATION BY	PLS	DATE 03
DRAWINGS CORRECTED BY	PLS	DATE 8/03

BENCH MARKS

ACS BRASS CAP STAMPED "NAA-9"
LOCATED IN SOUTHEAST QUADRANT OF PASEO DEL NORTE & NORTH DIVERSION CHANNEL INTERSECTION.
GEOGRAPHIC POSITION (NAD 1927), IN FEET
N.M. STATE PLANE COORDINATES (CENTRAL ZONE)
X = 394,134.18 Y = 1,518,711.30
ELEVATION = 5069.27 (NGVD 1929), IN FEET

MICRO-FILM INFORMATION

RECORDED BY DATE
NO.

SURVEY INFORMATION

FIELD NOTES

NO.	BY	DATE

ENGINEER'S SEAL

DIANE HOELZER NEW MEXICO 11967 REGISTERED PROFESSIONAL ENGINEER
11/1/03

NO.	DATE	REMARKS	BY
		REVISIONS	

DESIGN

DESIGNED BY	DLH	DATE 01/02
DRAWN BY	ACH	DATE 01/02
CHECKED BY	DMG	DATE 01/02

CITY OF ALBUQUERQUE
PUBLIC WORKS DEPARTMENT

TITLE: VISTA DEL NORTE - UNIT 5A
CALLE COMODO
PAVING IMPROVEMENTS

DESIGN REVIEW COMMITTEE	CITY ENGINEER APPROVAL	LAST DESIGN UPDATE	MO./DAY/YR.	MO./DAY/YR.
APPROVED FEB - 7 2003 REVIEW COMMITTEE	APPROVED FEB 27 2003 CITY ENGINEER			

CITY PROJECT NO.	ZONE MAP NO.	SHEET	OF
682686	D-16	6	15

SCANNED BY
MESA REPRO

F:\AOJOBS\A1005VDN\Un15a\A1005PP-8.dwg Fri Jan 10 08:34:50 2003 D. MARK GOODWIN & ASSOCIATES: PLTTED BY: ACH

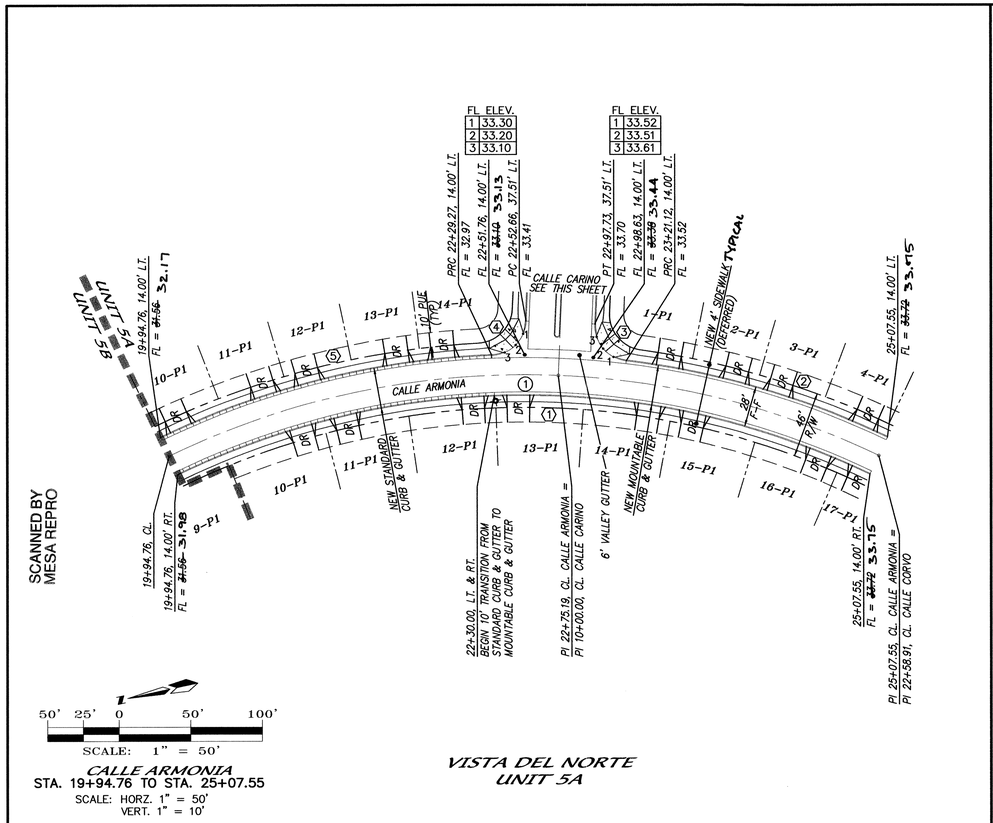

CALLE ARMONIA
STA. 19+94.76 TO STA. 25+07.55

SCALE: HORZ. 1" = 50'
VERT. 1" = 10'

VISTA DEL NORTE
UNIT 5A

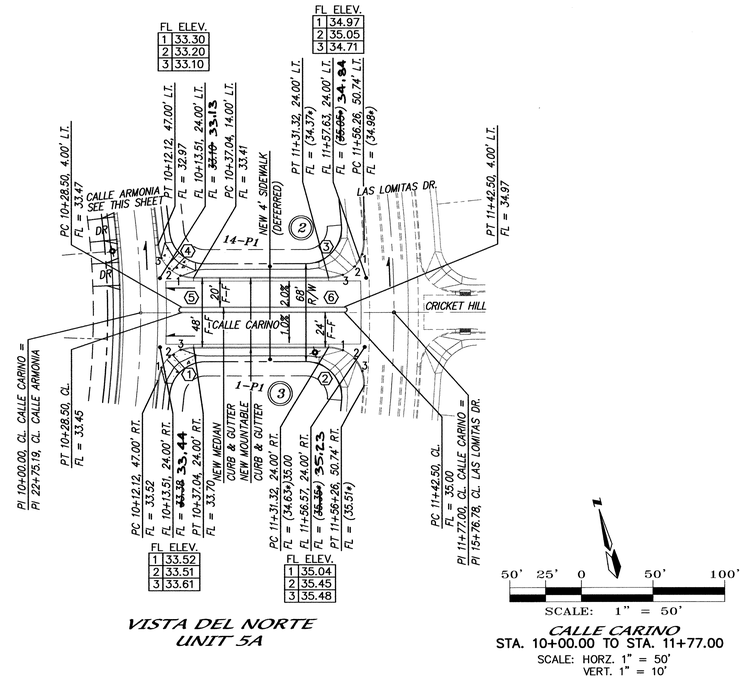

VISTA DEL NORTE
UNIT 5A

CALLE CARINO
STA. 10+00.00 TO STA. 11+77.00

SCALE: HORZ. 1" = 50'
VERT. 1" = 10'

* EXIST. DESIGN FLOWLINE

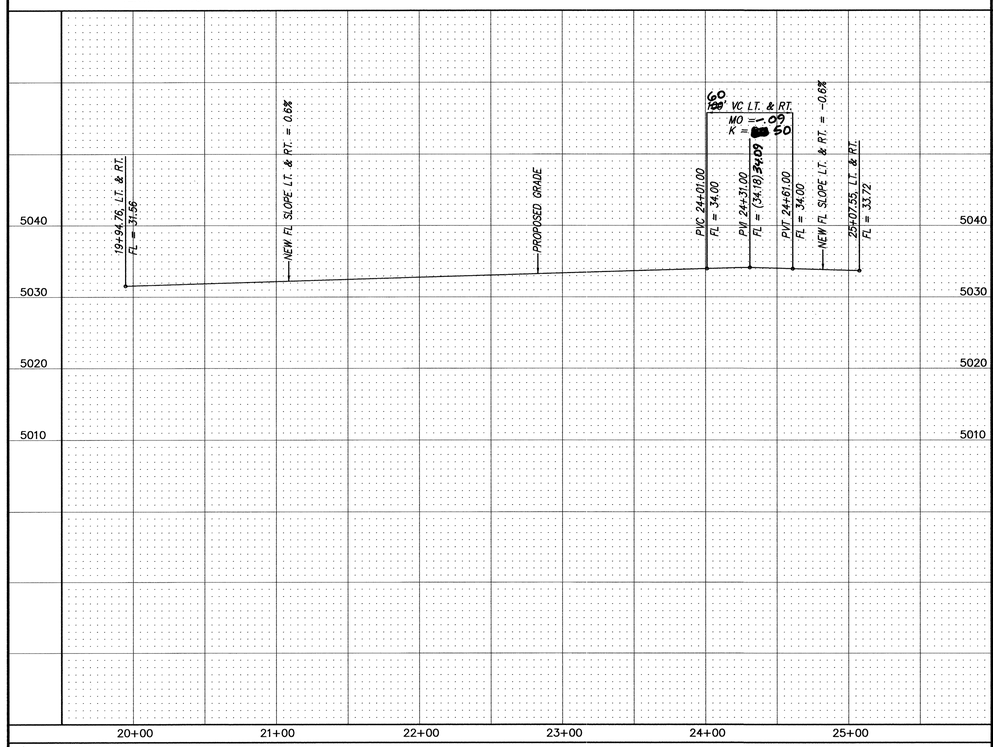

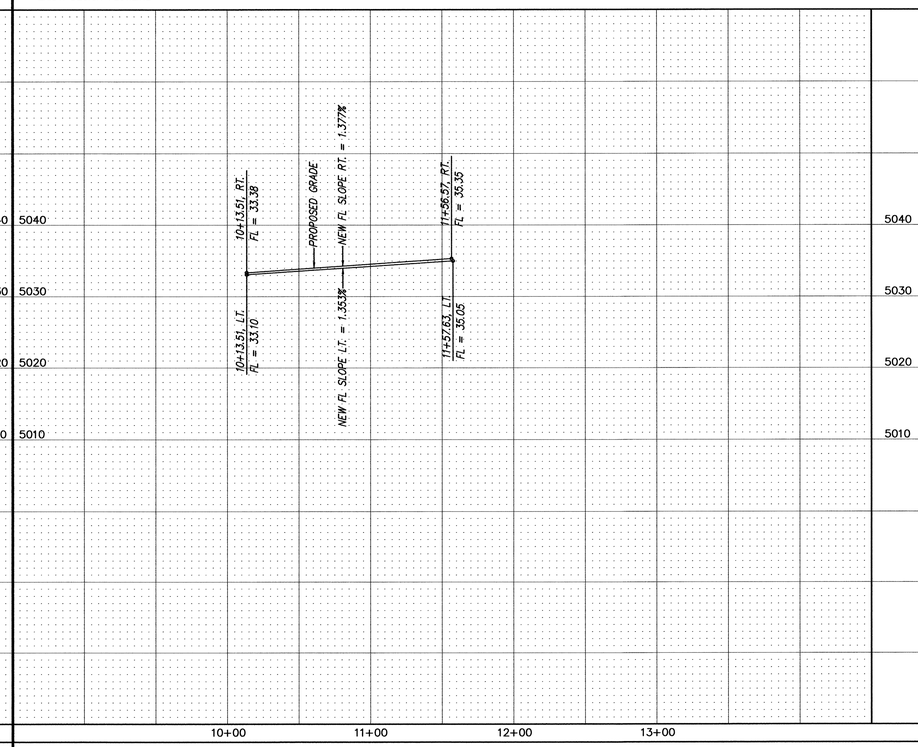

A1005VDN/UNIT 5A/A1005PP-12/01-07-03/ACH

NOTES

1. ALL STATIONING IS CENTERLINE STATIONING.

CALLE ARMONIA CURVE DATA – DESCRIBES FACE OF CURB

① Δ = 60°34'21"
R = 559.00'
L = 590.97'
T = 326.47'

② Δ = 18°38'29"
R = 587.00'
L = 190.98'
T = 96.34'

③ Δ = 85°24'34"
R = 25.00'
L = 37.27'
T = 23.07'

④ Δ = 85°24'34"
R = 25.00'
L = 37.27'
T = 23.07'

⑤ Δ = 32°44'47"
R = 587.00'
L = 335.49'
T = 172.46'

CURVE DATA – DESCRIBES CENTERLINE

① Δ = 90°04'43"
R = 75.00'
L = 117.83'
T = 75.02'

CALLE CARINO CURVE DATA – DESCRIBES FACE OF CURB

① Δ = 85°24'34"
R = 25.00'
L = 37.27'
T = 23.07'

② Δ = 93°58'47"
R = 25.00'
L = 41.01'
T = 26.80'

③ Δ = 93°58'47"
R = 25.00'
L = 41.01'
T = 26.80'

④ Δ = 85°24'34"
R = 25.00'
L = 37.27'
T = 23.07'

⑤ Δ = 180°00'00"
R = 2.00'
L = 6.28'
T =

⑥ Δ = 180°00'00"
R = 2.00'
L = 6.28'
T =

CERTIFICATE OF SUBSTANTIAL COMPLIANCE ON PLANS

I, Diane Hoelzer, NMPE 11967, of the firm Mark Goodwin & Associates, PA, a Registered Professional Engineer in the State of New Mexico, do hereby certify, to the best of my knowledge and belief, that the infrastructure installed as part of this project has been inspected by me or by a qualified person under my direct supervision, and has been constructed in accordance with the plans and specifications approved by the City Engineer and that the original design intent of the approved plans has been met, except as noted by me on the as-built construction drawings. This Certification is based on site inspections by me or personnel under my direction, and survey information provided by ALS, Inc., NMPS number 7719.

Diane Hoelzer 10-29-03

DIANE HOELZER NEW MEXICO 11967 REGISTERED PROFESSIONAL ENGINEER

AS BUILT INFORMATION

CONTRACTOR STAKED BY	Sundance	DATE 03
INSPECTOR'S CHANGE BY	AIS	DATE 8/03
FIELD VERIFICATION BY	DMG	DATE 03
AS-BUILTS CORRECTED BY	AIS	DATE 8/03

MICRO-FILM INFORMATION

RECORDED BY	DATE
NO.	

BENCH MARKS

ACS BRASS CAP STAMPED "NAA-9"
LOCATED IN SOUTHEAST QUADRANT OF PASEO DEL NORTE & NORTH DIVERSION CHANNEL INTERSECTION.
GEOGRAPHIC POSITION (NAD 1927), IN FEET
N.M. STATE PLANE COORDINATES (CENTRAL ZONE)
X = 394,134.18 Y = 1,518,711.30
ELEVATION = 5069.27 NGVD, IN FEET

SURVEY INFORMATION

FIELD NOTES

NO.	BY	DATE

ENGINEER'S SEAL

DIANE HOELZER NEW MEXICO 11967 REGISTERED PROFESSIONAL ENGINEER 11-1-03

NO.	DATE	REMARKS	BY
		REVISIONS	

		DATE
DESIGN		02/02
DESIGNED BY	DLH	DATE 02/02
DRAWN BY	ACH	DATE 02/02
CHECKED BY	DMG	DATE

dmg MARK GOODWIN & ASSOCIATES, P.A.
CONSULTING ENGINEERS
P.O. BOX 90606
ALBUQUERQUE, NEW MEXICO 87199
(505) 828-2200, FAX (505) 797-9539

CITY OF ALBUQUERQUE
PUBLIC WORKS DEPARTMENT

TITLE: VISTA DEL NORTE - UNIT 5A
CALLE ARMONIA & CALLE CARINO
PAVING IMPROVEMENTS

DESIGN REVIEW COMMITTEE	CITY ENGINEER APPROVAL	LAST DESIGN UPDATE	MO./DAY/YR.	MO./DAY/YR.
APPROVED FEB - 7 2003	APPROVED FEB 27 2003 CITY ENGINEER			

CITY PROJECT NO.	ZONE MAP NO.	SHEET	OF
682686	D-16	7	15

F:\AOJOBS\A1005VDN\Unit5a\A1005PP-12.dwg Thu Jan 09 15:29:02 2003 D. MARK GOODWIN & ASSOCIATES, PLTTED BY: ACH

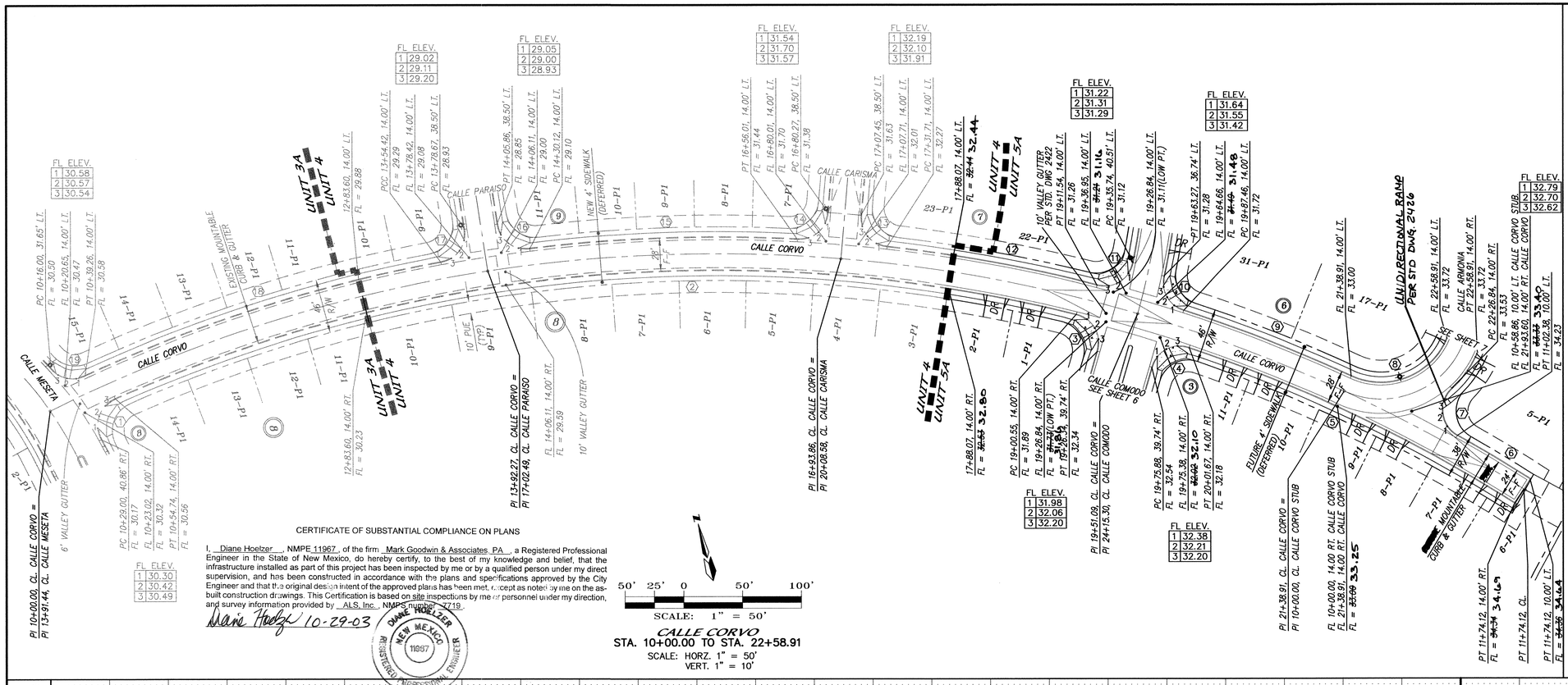

CERTIFICATE OF SUBSTANTIAL COMPLIANCE ON PLANS

I, Diane Hoelzer, NMPE 11967, of the firm Mark Goodwin & Associates, PA, a Registered Professional Engineer in the State of New Mexico, do hereby certify, to the best of my knowledge and belief, that the infrastructure installed as part of this project has been inspected by me or by a qualified person under my direct supervision, and has been constructed in accordance with the plans and specifications approved by the City Engineer and that the original design intent of the approved plans has been met, except as noted by me on the as-built construction drawings. This Certification is based on site inspections by me or personnel under my direction, and survey information provided by ALS, Inc., NMPLS number 7719.

Diane Hoelzer 10-29-03

DIANE HOELZER NEW MEXICO 11967 REGISTERED PROFESSIONAL ENGINEER

NOTES

1. ALL STATIONING IS CENTERLINE STATIONING.
2. ALL SIDEWALKS ARE DEFERRED.

CURVE DATA – DESCRIBES FACE OF CURB

① Δ = 94°50'17" R = 25.00' L = 41.38' T = 27.20'	② Δ = 37°56'59" R = 1263.00' L = 836.54' T = 434.27'
③ Δ = 92°16'06" R = 25.00' L = 40.26' T = 26.01'	④ Δ = 92°16'06" R = 25.00' L = 40.26' T = 26.01'
⑤ Δ = 14°46'35" R = 1263.00' L = 325.72' T = 163.77'	⑥ Δ = 4°01'32" R = 1287.00' L = 90.42' T = 45.23'
⑦ Δ = 108°13'37" R = 25.00' L = 47.22' T = 34.55'	⑧ Δ = 91°40'32" R = 61.00' L = 97.60' T = 62.81'
⑨ Δ = 6°47'43" R = 1291.00' L = 153.11' T = 76.65'	⑩ Δ = 84°16'08" R = 25.00' L = 36.77' T = 22.62'
⑪ Δ = 92°55'20" R = 25.00' L = 40.54' T = 26.31'	⑫ Δ = 8°04'07" R = 1291.00' L = 181.80' T = 91.05'
⑬ Δ = 88°18'06" R = 25.00' L = 38.53' T = 24.27'	⑭ Δ = 88°18'06" R = 25.00' L = 38.53' T = 24.27'
⑮ Δ = 10°08'07" R = 1291.00' L = 228.37' T = 114.48'	⑯ Δ = 88°18'06" R = 25.00' L = 38.53' T = 24.27'
⑰ Δ = 88°18'06" R = 25.00' L = 38.53' T = 24.27'	⑱ Δ = 14°08'26" R = 1291.00' L = 318.62' T = 160.12'
⑲ Δ = 72°23'08" R = 25.00' L = 31.58' T = 18.29'	

CURVE DATA – DESCRIBES CENTERLINE

① Δ = 59°36'35" R = 1277.00' L = 31.58' T = 18.29'

SCANNED BY MESA REPRO

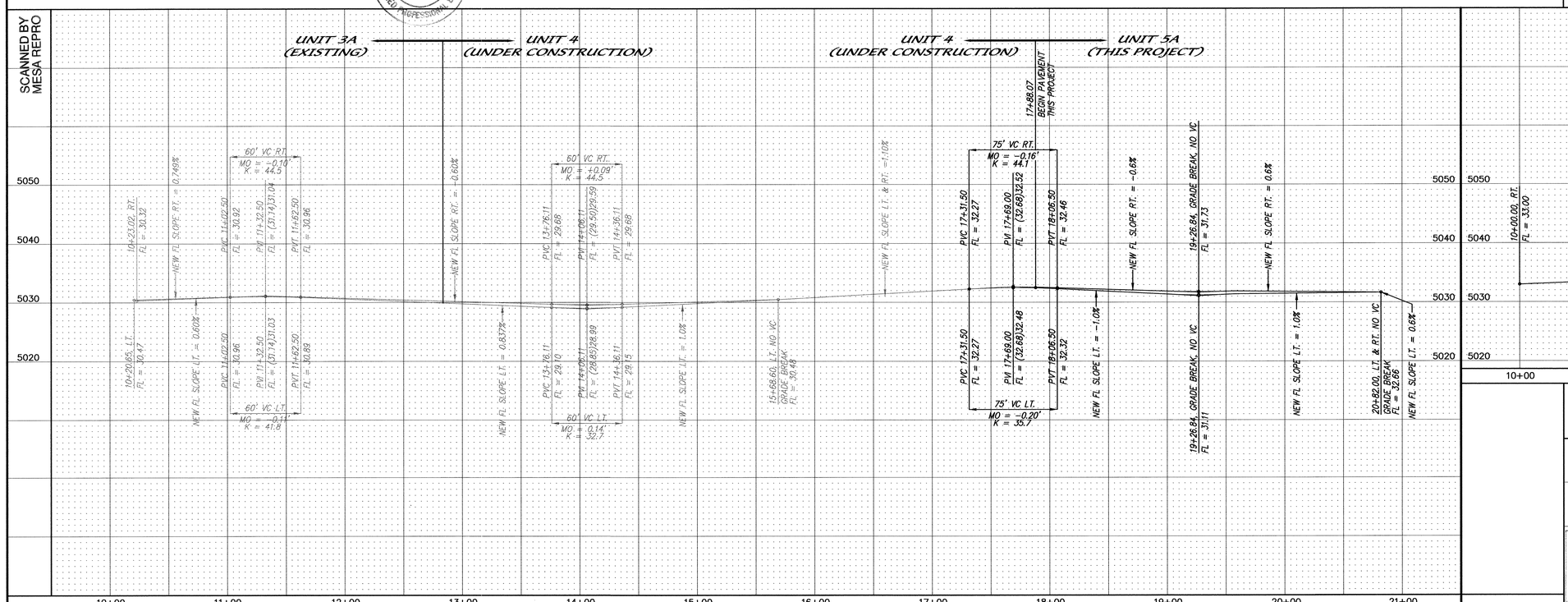

A1005VDN/UNIT 5A/A1005PP-17/01-07-03/ACH

AS BUILT INFORMATION

CONTRACTOR Sundance DATE 03
STAKED BY ALS DATE 8/03
INSPECTOR'S ACCEPTANCE BY DHG DATE 8/03
FIELD VERIFICATION BY ALS DATE 03
DRAWING CORRECTED BY ALS DATE 8/03

MICRO-FILM INFORMATION
RECORDED BY DATE
NO.

BENCH MARKS

ACS BRASS CAP STAMPED "NAA-9"
LOCATED IN SOUTHEAST QUADRANT OF PASEO DEL NORTE & NORTH DIVERSION CHANNEL INTERSECTION.
GEOGRAPHIC POSITION (NAD 1927), IN FEET
N.M. STATE PLANE COORDINATES (CENTRAL ZONE)
X = 394,134.18 Y = 1,518,711.30
ELEVATION = 5069.27 (NGVD 1929), IN FEET

SURVEY INFORMATION

FIELD NOTES

NO.	BY	DATE

ENGINEER'S SEAL

DIANE HOELZER NEW MEXICO 11967 REGISTERED PROFESSIONAL ENGINEER
11-17-03

NO.	DATE	REMARKS	BY

REVISIONS

		DATE
DESIGNED BY	DLH	01/02
DRAWN BY	ACH	01/02
CHECKED BY	DMG	01/02

dmg MARK GOODWIN & ASSOCIATES, P.A.
CONSULTING ENGINEERS
P.O. BOX 90606
ALBUQUERQUE, NEW MEXICO 87199
(505) 828-2200, FAX (505) 797-9539

CITY OF ALBUQUERQUE
PUBLIC WORKS DEPARTMENT

TITLE: VISTA DEL NORTE - UNIT5A
CALLE CORVO
PAVING IMPROVEMENTS

DESIGN REVIEW COMMITTEE	CITY ENGINEER APPROVAL	LAST DESIGN UPDATE	MO./DAY/YR.	MO./DAY/YR.
APPROVED FEB - 7 2003 DESIGN REVIEW COMMITTEE	APPROVED FEB 27 2003 CITY ENGINEER			

CITY PROJECT NO.	ZONE MAP NO.	SHEET	OF
682686	D-16	8	15

F:\A01JOBS\A1005VDN\Unit5a\A1005PP-17.dwg Thu Jan 09 15:31:33 2003 D. MARK GOODWIN & ASSOCIATES, PLTTED BY: ACH

LEGEND

- MOUNTABLE CURB & GUTTER
- STANDARD 8" CURB & GUTTER
- NEW FIRE HYDRANT
- NEW MH
- 20 LOT 20
- GATE VALVE
- TEE
- BEND
- TRACT/LOT BOUNDARY
- RIGHT OF WAY
- EASEMENTS
- W PROPOSED WATERLINE
- SAS PROPOSED SANITARY SEWER
- CENTERLINE OF ROAD
- EXISTING CURB AND GUTTER
- EXISTING SANITARY SEWER MANHOLE
- EXISTING WATER VALVE
- 8"W EXISTING WATERLINE
- EXISTING FIRE HYDRANT
- EXISTING STORM SEWER MANHOLE
- SAS EXISTING SANITARY SEWER
- EXISTING EDGE OF PAVEMENT
- 4' SIDEWALK
- 8309 NEW LOT ADDRESS
- NEW STREET LIGHT

CERTIFICATE OF SUBSTANTIAL COMPLIANCE ON PLANS

I, Diane Hoelzer, NMPE 11967, of the firm Mark Goodwin & Associates, PA, a Registered Professional Engineer in the State of New Mexico, do hereby certify, to the best of my knowledge and belief, that the infrastructure installed as part of this project has been inspected by me or by a qualified person under my direct supervision, and has been constructed in accordance with the plans and specifications approved by the City Engineer and that the original design intent of the approved plans has been met, except as noted by me on the as-built construction drawings. This Certification is based on site inspections by me or personnel under my direction, and survey information provided by ALS, Inc., NMPS number 7719.

Diane Hoelzer 10-29-03

DIANE HOELZER NEW MEXICO 11967 REGISTERED PROFESSIONAL ENGINEER

NOTES

1. ALL FIRE HYDRANTS ARE 4' BURY UNLESS OTHERWISE SPECIFIED.
2. ALL EXCAVATION, TRENCHING AND SHORING ACTIVITIES MUST BE CARRIED OUT IN ACCORDANCE WITH OSHA 29 CFR 1926.650 SUBPART P.

WATER SHUT-OFF NOTES

1. CONTRACTOR WILL CONTACT WATER SYSTEMS AT 857-8200, SEVEN (57) DAYS PRIOR TO NECESSARY SHUT-OFF.
2. VALVES SHALL ONLY BE OPERATED BY CITY WATER EMPLOYEES.
3. NON-PRESSURE CONNECTION ON CALLE CORVO, SHUT-OFF GATE VALVE (A) AND (B).
4. PRESSURE CONNECTION ON CALLE COMODO @ VISTA DEL NORTE.
5. NON-PRESSURE CONNECTION ON CALLE COMODO, SHUT-OFF GATE VALVE (C).
5. NON-PRESSURE CONNECTION ON CALLE ARMONIA, SHUT-OFF GATE VALVE (D), (E), & (F).

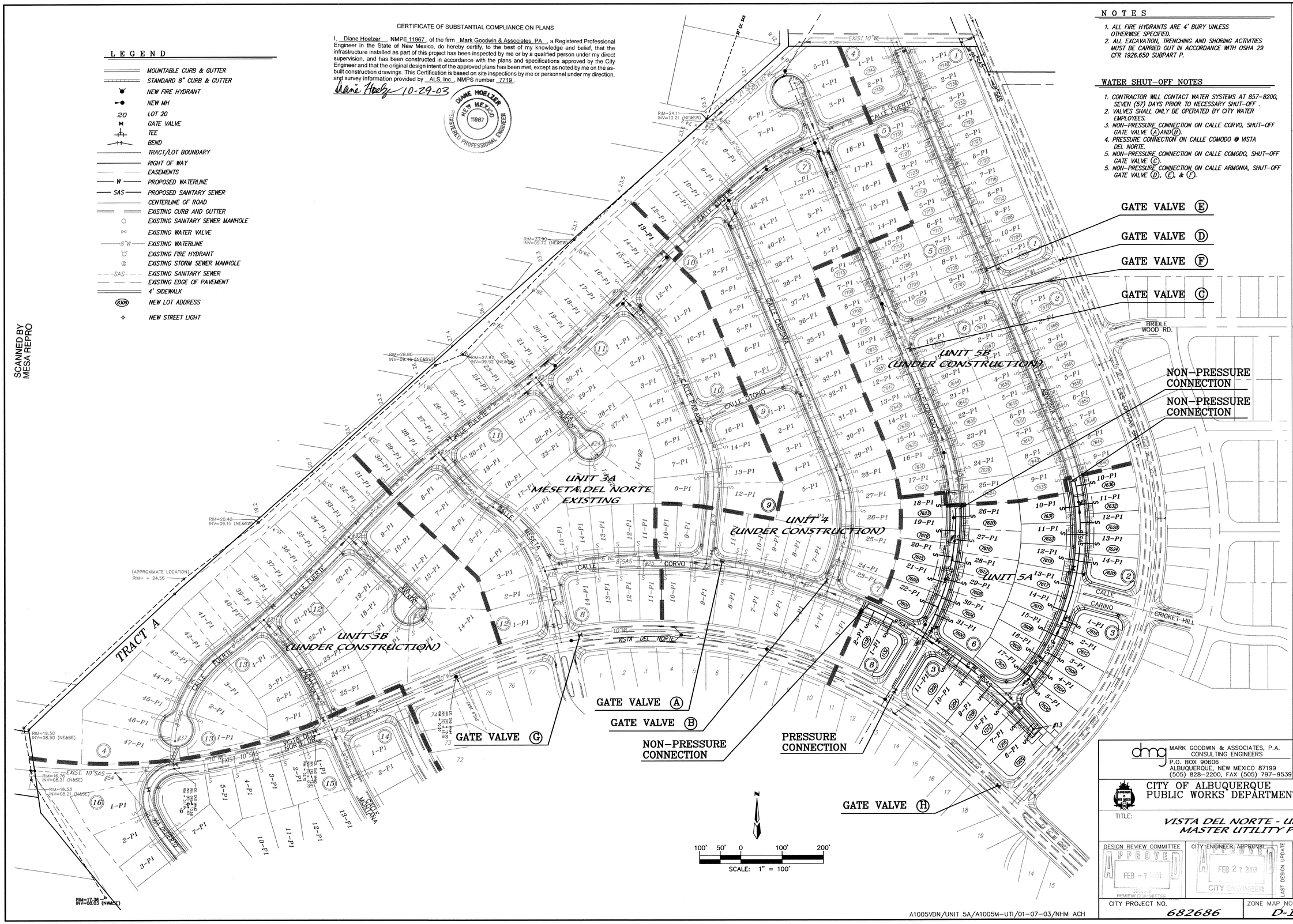

A1005VDN/UNIT 5A/A1005M-UTI/01-07-03/NHM ACH

SCANNED BY MESA REPRO

F:\A01JOBS\A1005VDN\Utilsa\A1005M-UTI.dwg Thu Jan 09 15:33:43 2003 D. MARK GOODWIN & ASSOCIATES, PLTTED BY: ACH

AS BUILT INFORMATION

CONTRACTOR STAKED BY	Sundance / ALS	DATE 03
INSPECTOR'S CHANGE BY	DNG	DATE 8/03
FIELD VERIFICATION BY	ALS	DATE 03
DRAWINGS CORRECTED BY	ALS	DATE 8/03

MICRO-FILM INFORMATION

RECORDED BY	DATE
NO.	

BENCH MARKS

ACS BRASS CAP STAMPED "NAA-9"
LOCATED IN SOUTHEAST QUADRANT OF PASEO DEL NORTE & NORTH DIVERSION CHANNEL INTERSECTION.
GEOGRAPHIC POSITION (NAD 1927), IN FEET
N.M. STATE PLANE COORDINATES (CENTRAL ZONE)
X = 394,134.18 Y = 1,518,711.30
ELEVATION = 5069.27 (NGVD 1929), IN FEET

SURVEY INFORMATION

FIELD NOTES

NO.	BY	DATE

ENGINEER'S SEAL

DIANE HOELZER NEW MEXICO 11967 REGISTERED PROFESSIONAL ENGINEER 1-1-03

NO.	DATE	REMARKS	BY

REVISIONS

DESIGN		
DESIGNED BY	DLH	DATE 12/01
DRAWN BY	NHM	DATE 12/01
CHECKED BY	DMG	DATE 12/01

dmg MARK GOODWIN & ASSOCIATES, P.A.
CONSULTING ENGINEERS
P.O. BOX 90606
ALBUQUERQUE, NEW MEXICO 87199
(505) 828-2200, FAX (505) 797-9539

CITY OF ALBUQUERQUE
PUBLIC WORKS DEPARTMENT

TITLE: VISTA DEL NORTE - UNIT 5A
MASTER UTILITY PLAN

DESIGN REVIEW COMMITTEE	CITY ENGINEER APPROVAL	LAST DESIGN UPDATE	MO./DAY/YR.	MO./DAY/YR.
APPROVED FEB - 7 2003 DESIGN REVIEW COMMITTEE	APPROVED FEB 27 2003 CITY ENGINEER			

CITY PROJECT NO.	ZONE MAP NO.	SHEET	OF
682686	D-16	9	15

CERTIFICATE OF SUBSTANTIAL COMPLIANCE ON PLANS

I, Diane Hoelzer, NMPE 11967, of the firm Mark Goodwin & Associates, PA, a Registered Professional Engineer in the State of New Mexico, do hereby certify, to the best of my knowledge and belief, that the infrastructure installed as part of this project has been inspected by me or by a qualified person under my direct supervision, and has been constructed in accordance with the plans and specifications approved by the City Engineer and that the original design intent of the approved plans has been met, except as noted by me on the as-built construction drawings. This Certification is based on site inspections by me or personnel under my direction, and survey information provided by ALS Inc., NMPS number 7719.

Diane Hoelzer 10-29-03

DIANE HOELZER NEW MEXICO 11967 REGISTERED PROFESSIONAL ENGINEER

SCANNED BY MESA REPRO

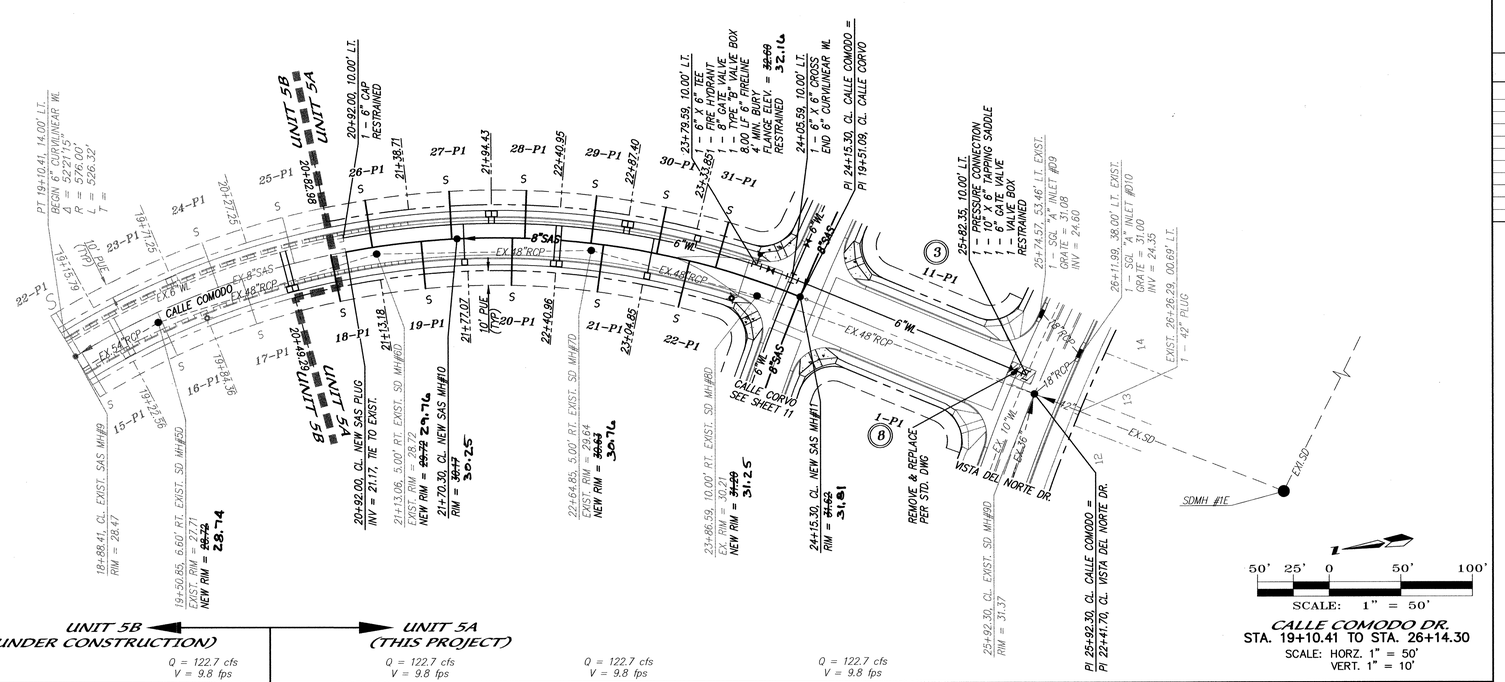

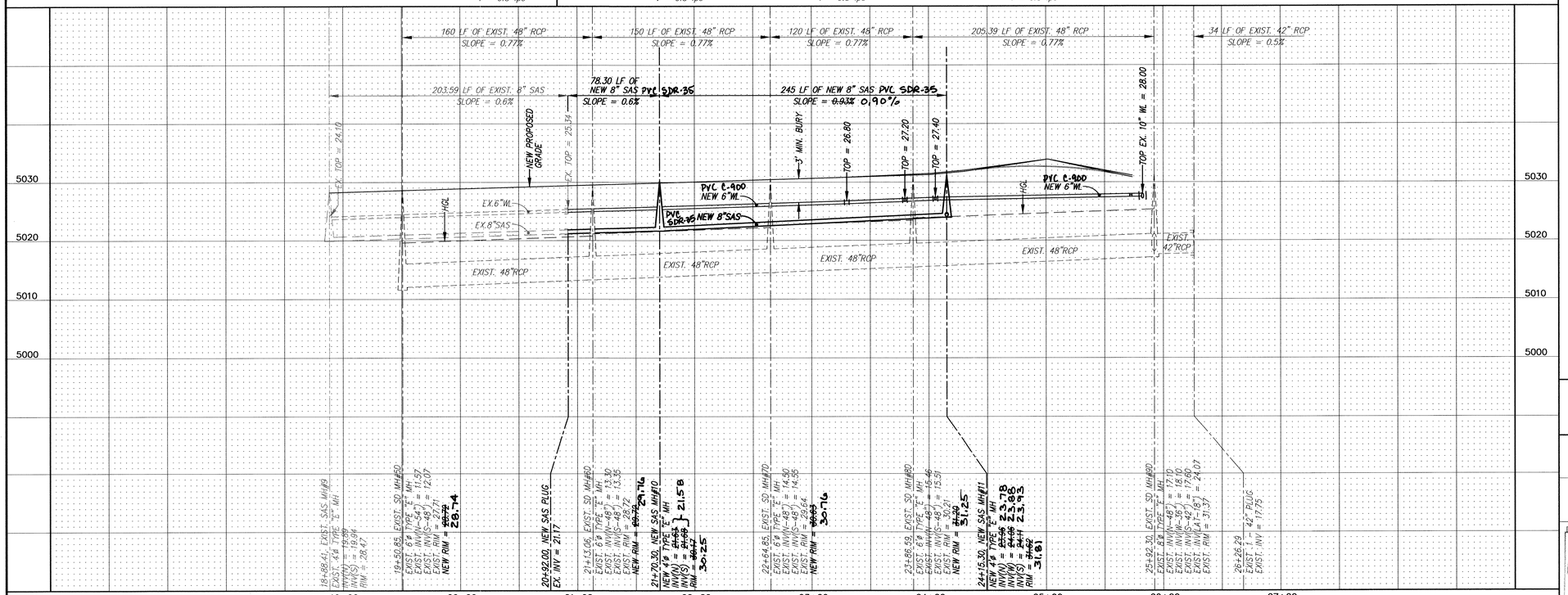

A1005VDN/UNIT 5A/A1005UP-22/01-07-03/ACH

NOTES

1. ALL STATIONING IS CENTERLINE STATIONING.
2. SEE GATE VALVE BOX DETAIL ON SHEET 14.

SANITARY SEWER SERVICES

BLOCK	LOT	STATION AT PUE	INV. ELEV. AT PUE	LENGTH AT PUE
6	26	21+10.78	24.52'	33.00'
6	27	21+66.57	24.86'	33.00'
6	28	22+17.69	25.17'	33.00'
6	29	22+64.17	25.44'	33.00'
6	30	23+10.63	25.72'	33.00'
6	31	23+52.98	25.98'	33.00'
7	18	20+81.24	24.35'	33.00'
7	19	21+45.13	24.73'	33.00'
7	20	22+09.02	25.11'	33.00'
7	21	22+72.91	25.50'	33.00'
7	22	23+34.11	25.87'	33.00'

RESTRAINED JOINT LENGTH FOR BENDS, VALVES, DEAD ENDS (FT.)

PIPE SIZE	90°	45°	22.5°	11.25°	VALVE
6"	17'	7'	–	–	46'
10"	–	11'	5'	3'	72'

LENGTH OF RESTRAINED PIPE ON EACH SIDE OF THE BEND. RESTRAIN BRANCH AT FITTING ONLY MINIMUM ATTACHED PIPE LENGTH, RUN SIDE OF TEE: 10.00 FEET.

RESTRAINED JOINT LENGTHS FOR REDUCERS (FT.)

PIPE SIZE	LARGE SIDE	SMALL SIDE
10" X 6"	44'	–

RESTRAINED JOINT LENGTH FOR TEES (FT.)

PIPE SIZE	RUN	BRANCH
10"x10"x10"	15'	5'
10"x10"x6"	6'	1'
6"x6"x6"	10'	2'

AS BUILT INFORMATION

CONTRACTOR WORK STAKED BY	Sundance	DATE 03
INSPECTOR'S ACCEPTANCE BY	DHG	DATE 8/03
FIELD VERIFICATION BY	DHG	DATE 03
DRAWINGS CORRECTED BY	DHG	DATE 8/03

MICRO-FILM INFORMATION

RECORDED BY DATE

NO.

BENCH MARKS

ACS BRASS CAP STAMPED "NAA-9"
LOCATED IN SOUTHEAST QUADRANT OF PASEO DEL NORTE & NORTH DIVERSION CHANNEL INTERSECTION.
GEOGRAPHIC POSITION (NAD 1927), IN FEET
N.M. STATE PLANE COORDINATES (CENTRAL ZONE)
X = 394,134.18 Y = 1,518,711.30
ELEVATION = 5069.27 (NGVD 1929), IN FEET

SURVEY INFORMATION

FIELD NOTES

NO.	BY	DATE

ENGINEER'S SEAL

DIANE HOELLER NEW MEXICO 11967 REGISTERED PROFESSIONAL ENGINEER 11-7-03

NO.	DATE	REMARKS	BY

REVISIONS

		DATE
DESIGNED BY	DLH	01/02
DRAWN BY	ACH	01/02
CHECKED BY	DMG	01/02

dmg MARK GOODWIN & ASSOCIATES, P.A.
CONSULTING ENGINEERS
P.O. BOX 90606
ALBUQUERQUE, NEW MEXICO 87199
(505) 828-2200, FAX (505) 797-9539

CITY OF ALBUQUERQUE
PUBLIC WORKS DEPARTMENT

TITLE: VISTA DEL NORTE - UNIT 5A
CALLE COMODO
UTILITY IMPROVEMENTS

DESIGN REVIEW COMMITTEE: APPROVED FEB - 7 2003 DESIGN REVIEW COMMITTEE

CITY ENGINEER APPROVAL: APPROVED FEB 27 2003 CITY ENGINEER

LAST DESIGN UPDATE | MO./DAY/YR. | MO./DAY/YR.

CITY PROJECT NO.	ZONE MAP NO.	SHEET	OF
682686	D-16	10	15

F:\AOJOBS\A1005VDN\Unit5a\A1005UP-22.dwg Thu Jan 09 15:34:33 2003 D: MARK GOODWIN & ASSOCIATES, PLTTED BY: ACH

SCANNED BY MESA REPRO

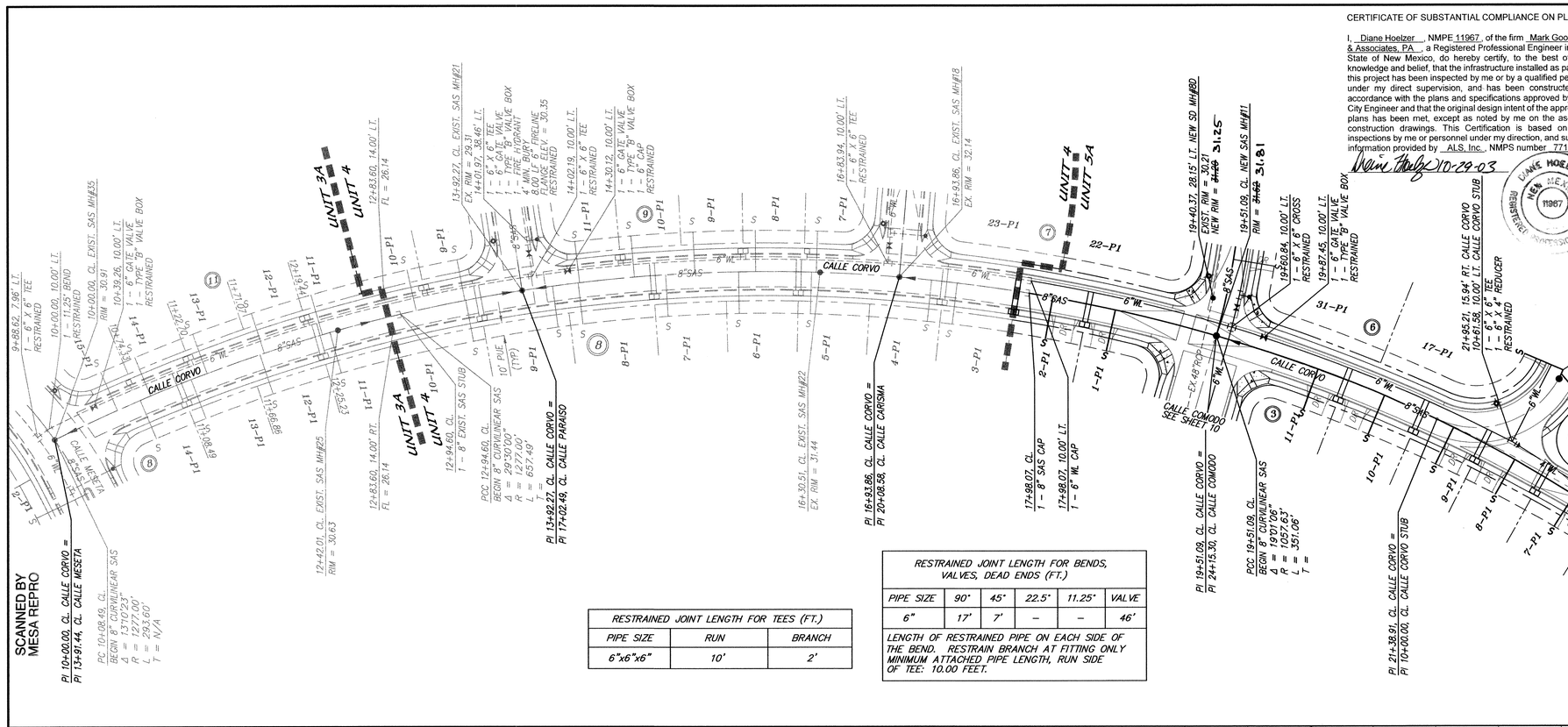

CERTIFICATE OF SUBSTANTIAL COMPLIANCE ON PLANS

I, Diane Hoelzer, NMPE 11967, of the firm Mark Goodwin & Associates, PA, a Registered Professional Engineer in the State of New Mexico, do hereby certify, to the best of my knowledge and belief, that the infrastructure installed as part of this project has been inspected by me or by a qualified person under my direct supervision, and has been constructed in accordance with the plans and specifications approved by the City Engineer and that the original design intent of the approved plans has been met, except as noted by me on the as-built construction drawings. This Certification is based on site inspections by me or personnel under my direction, and survey information provided by ALS, Inc., NMPS number 7719.

10-29-03

DIANE HOELZER NEW MEXICO 11967 REGISTERED PROFESSIONAL ENGINEER

NOTES

1. ALL STATIONING IS CENTERLINE STATIONING.
2. SEE GATE VALVE BOX DETAIL ON SHEET 14.

SANITARY SEWER SERVICES

BLOCK	LOT	STATION AT PUE	INV. ELEV. AT PUE	LENGTH AT PUE
3	6 *	11+69.85	29.46'	28.71'
3	7	11+23.92	29.07'	29.53'
3	8	10+69.06	28.59'	31.29'
3	9	10+14.21	28.12'	32.56'
3	10	20+92.80	26.68'	33.39'
3	11	20+36.18	26.57'	33.63'
8	1	18+68.02	26.70'	33.00'
8	2	18+17.16	27.21'	33.00'
8	3	17+40.14	26.52'	33.00'
8	4	16+81.95	26.17'	33.00'
8	5	16+23.76	25.81'	33.00'
8	6	15+65.57	25.44'	33.00'
8	7	15+07.38	24.86'	33.00'
8	8	14+37.31	24.16'	33.00'
8	9	14+16.78	23.96'	33.00'
8	10	13+46.71	24.35'	33.00'
8	11	12+35.50	25.28'	33.00'
8	12	11+77.13	25.77'	33.00'
8	13	11+18.75	26.04'	33.00'
8	14	10+75.04	25.71'	33.00'
9	7	16+27.51	25.83'	33.00'
9	8	15+79.14	25.53'	33.00'
9	9	15+30.78	25.09'	33.00'
9	10	14+82.41	24.61'	33.00'
9	11	14+38.54	24.17'	33.00'
11	9	13+45.99	24.35'	33.00'
11	10	13+06.42	24.93'	33.00'
11	11	12+29.88	25.33'	33.00'
11	12	11+80.82	25.74'	33.00'
11	13	11+32.45	26.03'	33.00'
11	14	10+84.08	25.78'	33.00'
11	15	10+64.59	25.63'	33.00'

* SANITARY SEWER SERVICE LINE INTO MANHOLE PER STD. DWG DTL 2118.

RESTRAINED JOINT LENGTH FOR TEES (FT.)

PIPE SIZE	RUN	BRANCH
6"x6"x6"	10'	2'

RESTRAINED JOINT LENGTH FOR BENDS, VALVES, DEAD ENDS (FT.)

PIPE SIZE	90°	45°	22.5°	11.25°	VALVE
6"	17'	7'	–	–	46'

LENGTH OF RESTRAINED PIPE ON EACH SIDE OF THE BEND. RESTRAIN BRANCH AT FITTING ONLY MINIMUM ATTACHED PIPE LENGTH, RUN SIDE OF TEE: 10.00 FEET.

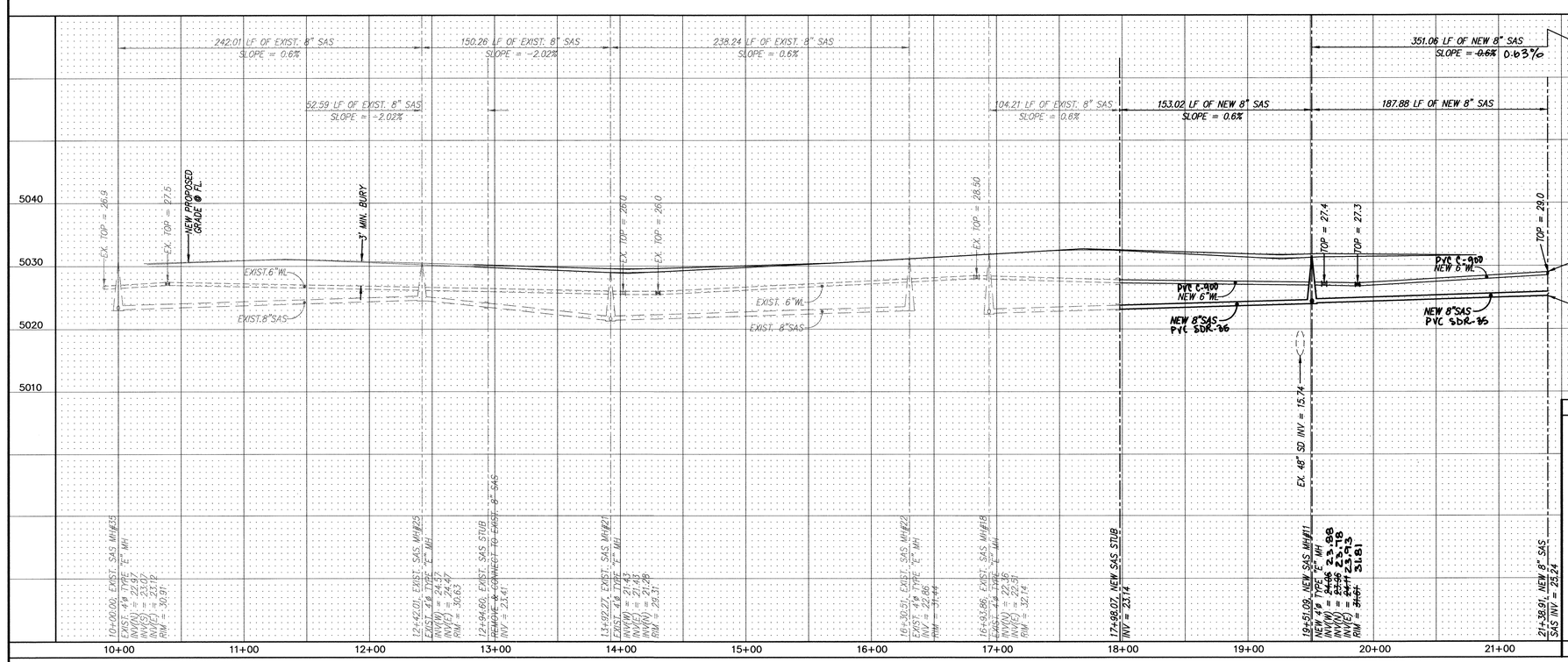

AS BUILT INFORMATION

CONTRACTOR	Sundance	DATE 03
WORK STAKED BY	ALS	
INSPECTOR'S CHANGE BY	DHG	DATE 8/03
FIELD VERIFICATION BY	DHG	DATE 03
DRAWINGS CORRECTED BY	ALS	DATE 8/03

MICRO-FILM INFORMATION

RECORDED BY	DATE
NO.	

BENCH MARKS

ACS BRASS CAP STAMPED "NAA-9"
LOCATED IN SOUTHEAST QUADRANT OF PASEO DEL NORTE & NORTH DIVERSION CHANNEL INTERSECTION.
GEOGRAPHIC POSITION (NAD 1927), IN FEET
N.M. STATE PLANE COORDINATES (CENTRAL ZONE)
X = 394,134.18 Y = 1,518,711.30
ELEVATION = 5069.27 (NGVD 1929), IN FEET

SURVEY INFORMATION

FIELD NOTES

NO.	BY	DATE

ENGINEER'S SEAL

DIANE HOELZER NEW MEXICO 11967 REGISTERED PROFESSIONAL ENGINEER 11-1-03

NO.	DATE	REMARKS	BY

REVISIONS

		DATE
DESIGNED BY	DLH	01/02
DRAWN BY	ACH	01/02
CHECKED BY	DMG	01/02

dmg MARK GOODWIN & ASSOCIATES, P.A.
CONSULTING ENGINEERS
P.O. BOX 90606
ALBUQUERQUE, NEW MEXICO 87199
(505) 828-2200, FAX (505) 797-9539

CITY OF ALBUQUERQUE
PUBLIC WORKS DEPARTMENT

TITLE: VISTA DEL NORTE - UNIT 5A
CALLE CORVO
UTILITY IMPROVEMENTS

DESIGN REVIEW COMMITTEE: APPROVED FEB - 7 2003 DESIGN REVIEW COMMITTEE

CITY ENGINEER APPROVAL: APPROVED FEB 27 2003 CITY

LAST DESIGN UPDATE | MO./DAY/YR. | MO./DAY/YR.

CITY PROJECT NO. 682686 | ZONE MAP NO. D-16 | SHEET 11 OF 15

A1005VDN/UNIT 5A/A1005UP-23-R/01-07-03/ACH

F:\A01JOBS\A1005VDN\Unit5a\A1005UP-23-R.dwg Thu Jan 09 15:37:47 2003 D. MARK GOODWIN & ASSOCIATES PLOTTED BY: ACH

CERTIFICATE OF SUBSTANTIAL COMPLIANCE ON PLANS

I, Diane Hoelzer, NMPE 11967, of the firm Mark Goodwin & Associates, PA, a Registered Professional Engineer in the State of New Mexico, do hereby certify, to the best of my knowledge and belief, that the infrastructure installed as part of this project has been inspected by me or by a qualified person under my direct supervision, and has been constructed in accordance with the plans and specifications approved by the City Engineer and that the original design intent of the approved plans has been met, except as noted by me on the as-built construction drawings. This Certification is based on site inspections by me or personnel under my direction, and survey information provided by ALS, Inc., NMPS number 7719.

10-29-03

DIANE HOELZER NEW MEXICO 11967 REGISTERED PROFESSIONAL ENGINEER

SCANNED BY MESA REPRO

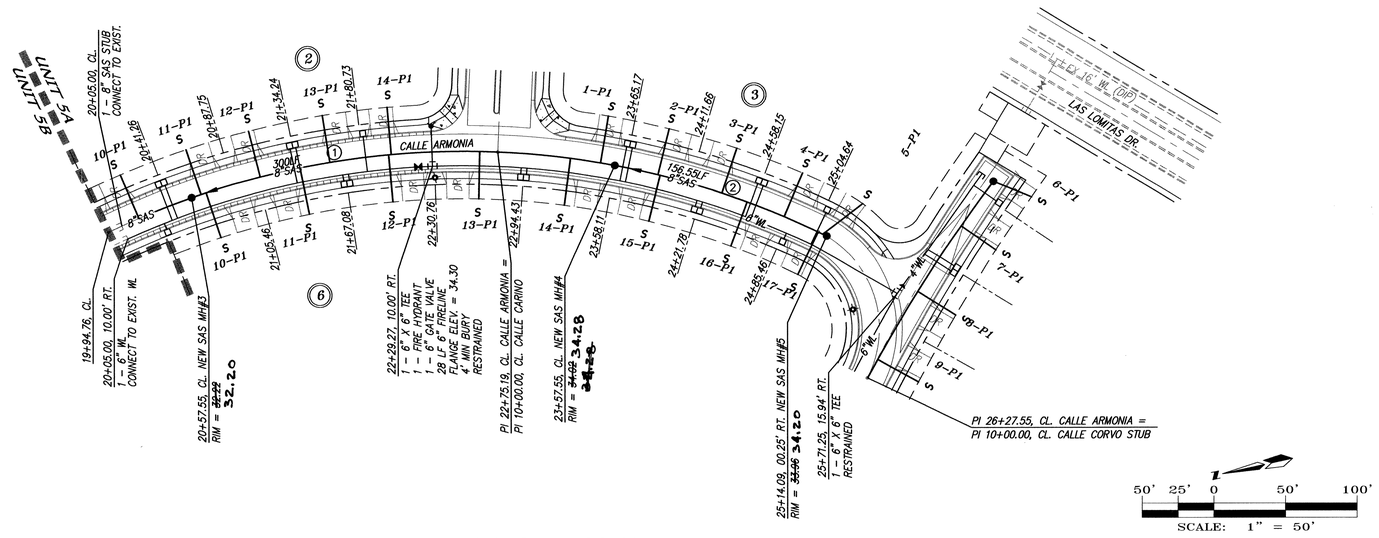

SCALE: 1" = 50'

VISTA DEL NORTE
UNIT 5A

CALLE ARMONIA
STA. 19+94.76 TO STA. 25+07.55
SCALE: HORZ. 1" = 50'
VERT. 1" = 10'

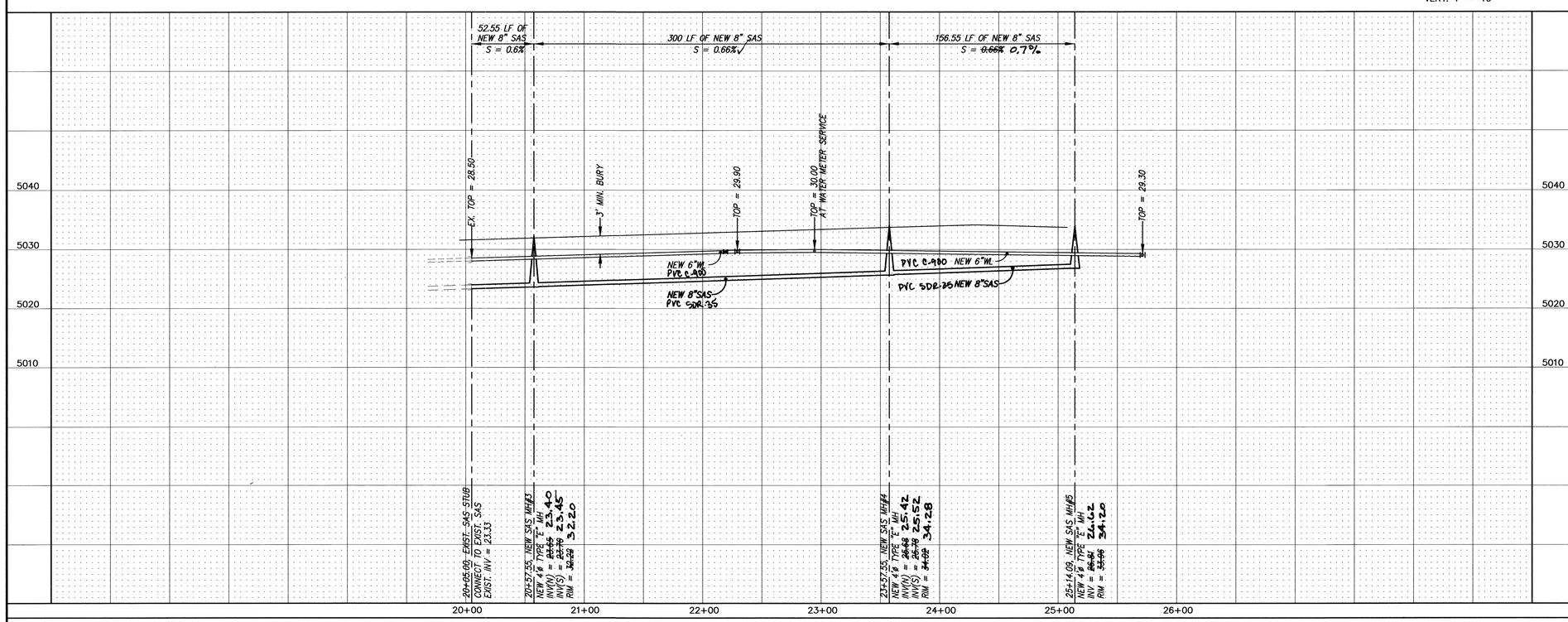

A1005VDN/UNIT 5A/A1005UP-12/01-07-03/ACH

NOTES

1. ALL STATIONING IS CENTERLINE STATIONING.

CURVE DATA – DESCRIBES SAS

① Δ = 29°59'52"
R = 573.00'
L = 300.00'
T = 151.37'

② Δ = 15°39'15"
R = 573.00'
L = 156.55'
T = 77.43'

SANITARY SEWER SERVICES

BLOCK	LOT	STATION AT PUE	INV. ELEV. AT PUE	LENGTH AT PUE
2	10	20+18.01	26.70'	33.00'
2	11	20+64.50	26.98'	33.00'
2	12	21+07.72	27.24'	33.00'
2	13	21+57.49	27.54'	33.00'
2	14	22+00.70	27.80'	33.00'
3	1	23+47.44	28.68'	33.00'
3	2	23+88.41	28.92'	33.00'
3	3	24+34.91	29.16'	33.00'
3	4	24+81.40	28.88'	33.00'
3	5	25+10.95	28.70'	35.11'
6	10	20+68.30	27.00'	33.00'
6	11	21+36.27	27.41'	33.00'
6	12	21+98.92	27.79'	33.00'
6	13	22+62.60	28.17'	33.00'
6	14	23+26.27	28.55'	33.00'
6	15	23+89.94	28.93'	33.00'
6	16	24+53.62	29.04'	33.00'
6	17	25+07.55	28.72'	33.00'

RESTRAINED JOINT LENGTH FOR BENDS, VALVES, DEAD ENDS (FT.)

PIPE SIZE	90°	45°	22.5°	11.25°	VALVE
6"	17'	7'	–	–	46'
10"	–	11'	5'	3'	72'

LENGTH OF RESTRAINED PIPE ON EACH SIDE OF THE BEND. RESTRAIN BRANCH AT FITTING ONLY MINIMUM ATTACHED PIPE LENGTH, RUN SIDE OF TEE: 10.00 FEET.

RESTRAINED JOINT LENGTHS FOR REDUCERS (FT.)

PIPE SIZE	LARGE SIDE	SMALL SIDE
10" X 6"	44'	–

RESTRAINED JOINT LENGTH FOR TEES (FT.)

PIPE SIZE	RUN	BRANCH
10"x10"x10"	15'	5'
10"x10"x6"	6'	1'
6"x6"x6"	10'	2'

AS BUILT INFORMATION

CONTRACTOR STAKED BY Sundance
INSPECTOR'S ACCEPTANCE BY AIS DATE 03
FIELD VERIFICATION BY DMG DATE 8/03
DRAWINGS CORRECTED BY AIS DATE 03
AIS DATE 8/03

MICRO-FILM INFORMATION
RECORDED BY DATE
NO.

BENCH MARKS

ACS BRASS CAP STAMPED "NAA-9"
LOCATED IN SOUTHEAST QUADRANT OF PASEO DEL NORTE & NORTH DIVERSION CHANNEL INTERSECTION.
GEOGRAPHIC POSITION (NAD 1927), IN FEET
N.M. STATE PLANE COORDINATES (CENTRAL ZONE)
X = 394,134.18 Y = 1,518,711.30
ELEVATION = 5069.27 NGVD, IN FEET

SURVEY INFORMATION

NO.	FIELD NOTES BY	DATE

ENGINEER'S SEAL

DIANE HOELZER NEW MEXICO 11967 REGISTERED PROFESSIONAL ENGINEER

NO.	DATE	REMARKS	BY

REVISIONS

		DATE
DESIGNED BY	DLH	02/02
DRAWN BY	ACH	02/02
CHECKED BY	DMG	02/02

MARK GOODWIN & ASSOCIATES, P.A.
CONSULTING ENGINEERS
P.O. BOX 90606
ALBUQUERQUE, NEW MEXICO 87199
(505) 828-2200, FAX (505) 797-9539

CITY OF ALBUQUERQUE
PUBLIC WORKS DEPARTMENT

TITLE: VISTA DEL NORTE - UNIT 5A
CALLE ARMONIA
UTILITY IMPROVEMENTS

DESIGN REVIEW COMMITTEE: APPROVED FEB - 7 2003 DESIGN REVIEW COMMITTEE

CITY ENGINEER APPROVAL: APPROVED FEB 27 2003 CITY ENGINEER

LAST DESIGN UPDATE | MO./DAY/YR. | MO./DAY/YR.

CITY PROJECT NO.	ZONE MAP NO.	SHEET	OF
682686	D-16	12	15

F:\A01JOBS\A1005VDN\Unit5a\A1005UP-12.dwg Thu Jan 09 15:38:42 2003 D. MARK GOODWIN & ASSOCIATES, PLTTED BY: ACH

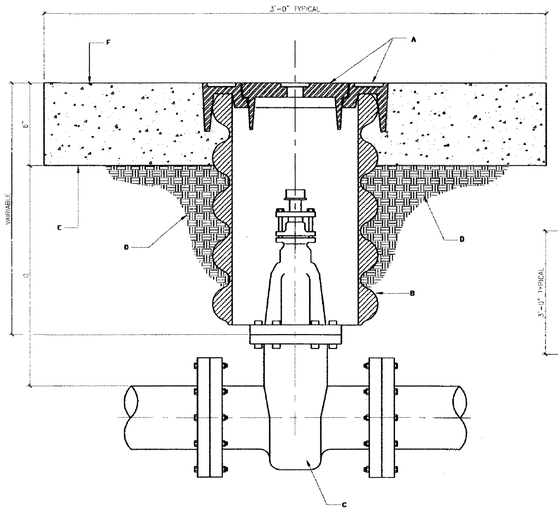

GENERAL NOTES:

A VALVE BOX RING AND COVER. SEE DWG. 2328.

B 10" DIAMETER RIBBED OR CORRUGATED PVC OR PE PIPE WITH SMOOTH INTERIOR.

C NEW OR EXISTING VALVE.

D COMPACTED BACKFILL. SOIL OR BASE COURSE MATERIAL (95% COMPACTION). SEE SECTION 701.

E 3'-0"x3'-0" OCTAGONAL CONCRETE COLLAR. COLLAR IS TO BE TAPERED IN UNPAVED ROADWAYS AND FLUSH IN PAVED ROADWAY. CONCRETE STRENGTH SHALL BE PER SECTION 101 OF THE STANDARD SPECIFICATIONS, LATEST EDITION.

F TOP OF CONCRETE COLLAR SHALL BE STAMPED WITH LINE SIZE AND DIRECTION. MINIMUM LETTER SIZE SHALL BE 3" IN HEIGHT.

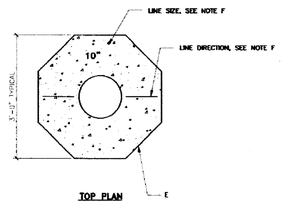

TOP PLAN

REVISIONS	CITY OF ALBUQUERQUE WATER VALVE BOX
	DWG. 2326 JANUARY 2002

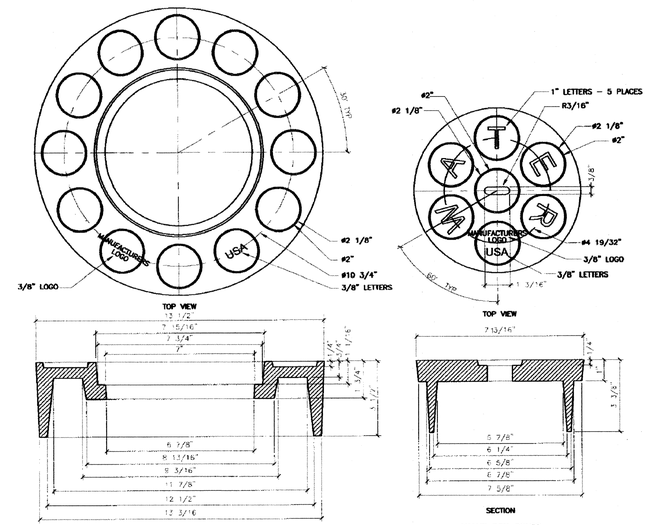

GENERAL NOTES - RING

1 ALBUQUERQUE VALVE BOX RING DESIGNED TO ACCEPT AN ALBUQUERQUE VALVE BOX COVER.

2 THE CASTING NUMBER, MANUFACTURER'S LOGO, DATE OF MANUFACTURE AND "USA" SHALL BE CAST IN A CONSPICUOUS LOCATION ON BOTH THE RING AND THE COVER.

3 FILLETS SHALL BE 1/4"R UNLESS OTHERWISE SPECIFIED.

4 A DRAFT ANGLE OF 3°-5° SHALL BE APPLIED UNLESS OTHERWISE SPECIFIED.

5 FINISH: REMOVE EXCESS IRON AND FINS.

6 THIS DETAIL DOES NOT APPLY FOR VALVE BOX RING AND COVER TO BE USED ON REUSE OR NON-POTABLE WATER SYSTEMS.

GENERAL NOTES - COVER

1 ALBUQUERQUE VALVE BOX COVER DESIGNED TO FIT INTO AN ALBUQUERQUE VALVE BOX RING.

2 THE CASTING NUMBER, MANUFACTURER'S LOGO, DATE OF MANUFACTURE AND "USA" SHALL BE CAST IN A CONSPICUOUS LOCATION ON BOTH THE RING AND THE COVER.

3 FILLETS SHALL BE 1/4"R UNLESS OTHERWISE SPECIFIED.

4 A DRAFT ANGLE OF 3°-5° SHALL BE APPLIED UNLESS OTHERWISE SPECIFIED.

5 FINISH: REMOVE EXCESS IRON AND FINS.

REVISIONS	CITY OF ALBUQUERQUE WATER RING AND COVER FOR VALVE BOX
	DWG. 2328 JANUARY 2002

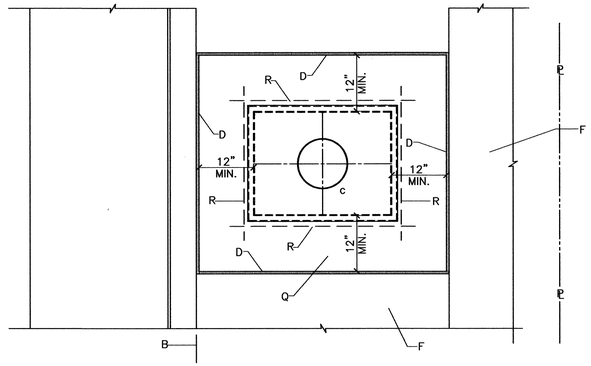

PLAN

SEE DWG. 2361 FOR TYPICAL INSTALLATIONS

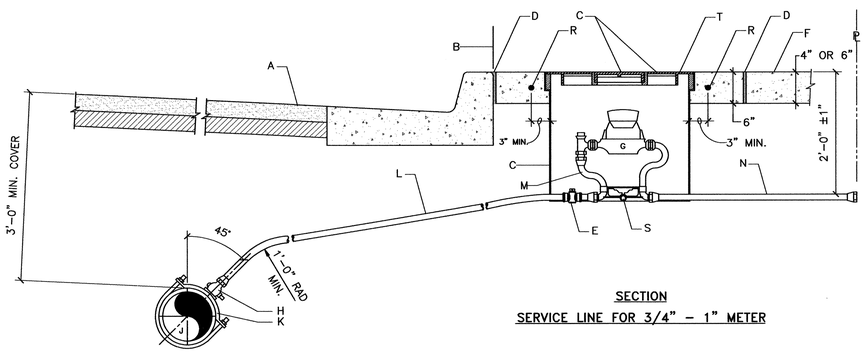

SECTION

SERVICE LINE FOR 3/4" - 1" METER

GENERAL NOTES:

1 THE METER SHALL BE SET UTILIZING A COPPER-SETTER. COPPER-SETTER HEIGHT 10" FOR 1" METER. 7" FOR 3/4" METER.

2 THE VALVE AND METER REGISTER BOX SHALL BE LOCATED UNDER THE LID OPENING. WHERE TWO METERS ARE TO BE INSTALLED IN A SINGLE METER BOX, THE METER REGISTERS SHALL BE WITHIN READING RANGE OF THE LID OPENING.

3 METER BOX LOCATION TO CONFORM TO DWG. 2361.

4 WHEN CONTRACTOR DOES NOT INSTALL METER, CONTRACTOR SHALL PROVIDE REMOVABLE PLUGS FOR END OF COPPER-SETTER.

5 EXISTING CONCRETE TO BE SAWCUT.

CONSTRUCTION NOTES:

A STREET SURFACE.

B BACK OF CURB.

C CAST IRON METER BOX, COVER AND LID. SEE DWG. 2368 OR 2369.

D 1/2" EXPANSION JOINT.

E CURB STOP, LOCATE INSIDE METER BOX.

F SIDEWALK OR DRIVEPAD.

G METER. TOP OF METER TO BE 12"-18" BELOW COVER.

H CORP STOP.

J MAIN WATER LINE.

K TAPPING SADDLE.

L COPPER SERVICE LINE.

M COPPER SETTER.

N TAILPIECE TO PROPERTY LINE WITH INSTA-TITE I.P.T. CAPPED FITTING.

Q CONCRETE PAD REQUIRED IN ALL AREAS.

R #4 REBAR CONTINUOUS ALL AROUND METER BOX.

S STABILIZER BAR. 12" LONG X 1/2" DIAMETER GALVANIZED STEEL PIPE.

T METER BOX LID SHALL BE FLUSH WITH SURROUNDING SIDEWALK.

A1005VDN/UNIT 5/A1005-WAT-DET/01-07-03/ACH

AS BUILT INFORMATION

CONTRACTOR Sundance
WORK STAKED BY 1915 DATE 03
INSPECTOR'S ACCEPTANCE BY DATE
FIELD VERIFICATION BY 1915 DATE 03
DRAWING CORRECTED BY 1915 DATE 8/03

MICRO-FILM INFORMATION
RECORDED BY DATE
NO.

BENCH MARKS

SURVEY INFORMATION
FIELD NOTES

NO.	BY	DATE

ENGINEER'S SEAL

DRAFT

C.O.A. STANDARD

NO.	DATE	REMARKS	BY
		REVISIONS	

		DATE
DESIGNED BY	DLH	01/02
DRAWN BY	ACH	01/02
CHECKED BY	DMG	01/02

dmg MARK GOODWIN & ASSOCIATES, P.A.
CONSULTING ENGINEERS
P.O. BOX 90606
ALBUQUERQUE, NEW MEXICO 87199
(505) 828-2200, FAX (505) 797-9539

CITY OF ALBUQUERQUE
PUBLIC WORKS DEPARTMENT

TITLE: *VISTA DEL NORTE - UNIT 5A*
WATER DETAILS

DESIGN REVIEW COMMITTEE	CITY ENGINEER APPROVAL	LAST DESIGN UPDATE	MO./DAY/YR.	MO./DAY/YR.
C.O.A. STANDARD	C.O.A. STANDARD			

DRAFT

CITY PROJECT NO.	ZONE MAP NO.	SHEET	OF
682686	D-16	13	15

SCANNED BY MESA REPRO

F:\A01\DBS\A1005VDN\Unit5A\A1005-WAT-DET.dwg Fri Jan 10 08:35:48 2003 D. MARK GOODWIN & ASSOCIATES: PLOTTED BY: ACH

CONSTRUCTION TRAFFIC CONTROL GENERAL NOTES

1. CONTRACTOR MUST OBTAIN FROM CONSTRUCTION COORDINATION AN EXCAVATION/BARRICADING PERMIT BEFORE ENGAGING IN ANY CONSTRUCTION, MAINTENANCE OR REPAIR WORK IN ANY OF THE CITY OF ALBUQUERQUE'S RIGHTS-OF-WAY. EMERGENCY WORK THAT WOULD PRESERVE LIFE OR PROPERTY IS EXCLUDED WITH THE UNDERSTANDING, THAT A PERMIT SHALL BE OBTAINED WITHIN 24 TO 48 HOURS.

2. CONTRACTOR SHALL AT THE TIME OF PERMIT REQUEST, SUBMIT FOR APPROVAL BY CONSTRUCTION COORDINATION, A TRAFFIC CONTROL PLAN DETAILING ALL EXISTING TOPOGRAPHY SUCH AS LANE WIDTHS, DRIVEWAYS, AND BUSINESS/RESIDENTIAL ACCESSES. THE TRAFFIC CONTROL PLAN SHALL INCLUDE ALL PHASES OF WORK AND SCHEDULES INVOLVED IN THE CONSTRUCTION PROJECT. ANY SEPERATE PHASES OF A CONSTRUCTION PROJECT SHALL BE GIVEN AN INDIVIDUAL PERMIT EACH. BLANKET PERMITS WILL NOT BE ISSUED.

3. THESE TYPICAL TRAFFIC CONTROL PLANS DO NOT REFLECT THE EXISTING TOPOGRAPHY SUCH AS DRIVEWAYS, LANE WIDTHS, AND BUSINESS/RESIDENTIAL ACCESSES. EVERY LOCATION THAT REQUIRES CONSTRUCTION TRAFFIC CONTROL SHALL HAVE A DETAILED TRAFFIC CONTROL PLAN SHOWING ALL EXISTING TOPOGRAPHY.

4. CONSTRUCTION SHALL NOT BEGIN UNLESS A TRAFFIC CONTROL PLAN HAS BEEN APPROVED AND VERIFIED BY CONSTRUCTION COORDINATION.

5. CONSTRUCTION COORDINATION SHALL BE NOTIFIED 48 HOURS PRIOR TO ANY TRAFFIC CONTROL CHANGES NEEDED BY CONTRACTOR, THAT WERE NOT PREVIOUSLY APPROVED. THESE TRAFFIC CONTROL CHANGES SHALL BE REQUESTED IN WRITING ACCOMPANIED WITH A TRAFFIC CONTROL PLAN REFLECTING SUCH CHANGES.

6. ALL CONSTRUCTION TRAFFIC CONTROL DEVICES SHALL COMPLY TO THE MANUAL ON UNIFORM TRAFFIC CONTROL DEVICES (MUTCD), LATEST EDITION. IT IS THE RESPONSIBILITY OF THE CONTRACTOR TO INSTALL, SERVICE AND MAINTAIN ALL TRAFFIC CONTROL DEVICES. TRAFFIC CONTROL DEVICES SHALL NOT BE REMOVED OR ALTERED IN ANY WAY WITHOUT THE APPROVAL OF CONSTRUCTION COORDINATION, PER SECTION 6A-4 OF THE MUTCD, LATEST EDITION.

7. THE CONSTRUCTION TRAFFIC CONTROL INITIAL SET-UP SHALL BE BY AN AMERICAN TRAFFIC SAFETY SERVICES ASSOCIATION (ATSSA) CERTIFIED WORKSITE TRAFFIC SUPERVISOR. THE MAINTENANCE AND SERVICING SHALL ALSO BE DONE BY AN ATSSA CERTIFIED WORKSITE TRAFFIC SUPERVISOR OR EQUIVALENT.

8. CONTRACTOR IS RESPONSIBLE TO MAINTAIN AND SERVICE ALL TRAFFIC CONTROL DEVICES 24 HOURS A DAY, 7 DAYS A WEEK THROUGHOUT LENGTH OF PROJECT. CONTRACTOR IS RESPONSIBLE THAT ALL TRAFFIC CONTROL DEVICES COMPLY WITH THE MUTCD, LATEST EDITION.

9. ALL ADVANCE WARNING SIGNS SHALL BE DOUBLE INDICATED WHENEVER THERE ARE MULTI-LANE TRAFFIC IN ANY ONE GIVEN DIRECTION AND THERE IS SUFFICIENT MEDIAN SPACE.

10. ALL BARRICADES IN ALL TAPERS AND TANGENTS SHALL BE PLACED APART, A DISTANCE MEASURED IN FEET, EQUAL TO THAT OF THE POSTED SPEED LIMIT. NO EXCEPTIONS UNLESS APPROVED BY CONSTRUCTION COORDINATION PER MUTCD SECTION 6A-4.

△1 11. ALL WORK IN ARTERIAL ROADWAYS SHALL BE ON A CONTINUOUS 24 HOUR PER DAY BASIS UNTIL COMPLETED.

12. CONTRACTOR IS RESPONSIBLE TO PROVIDE CONSTRUCTION COORDINATION, A WEEKLY LOG OF DAILY INSPECTIONS OF BARRICADE AND MAINTENANCE SCHEDULES ON PROJECTS THAT ARE OVER ONE WEEK DURATION.

13. EQUIPMENT OR MATERIALS SHALL NOT BE STORED WITHIN 15 FEET OF A TRAVELED TRAFFIC LANE DURING NON-WORKING HOURS WITHOUT THE APPROVAL OF CONSTRUCTION COORDINATION.

14. CONTRACTOR SHALL PROVIDE AND MAINTAIN A SAFE AND ADEQUATE MEANS OF CHANNELIZING PEDESTRIAN TRAFFIC AROUND AND THROUGH THE CONSTRUCTION AREA.

15. CONTRACTOR IS RESPONSIBLE FOR OBLITERATION OF ANY CONFLICTING STRIPING AND RESPONSIBLE FOR ALL TEMPORARY STRIPING.

16. CONTRACTOR SHALL MAINTAIN ACCESS TO ALL FACILITIES, BUSINESSES AND/OR RESIDENTS AT ALL TIMES.

17. CONTRACTOR SHALL PROVIDE ACCESS SIGNS FOR BUSINESSES LOCATED WITHIN THE CONSTRUCTION AREA UNDER THE SUPERVISION OF CONSTRUCTION COORDINATION. EACH ACCESS SIGN SHALL HAVE 5 INCH, WHITE OPAQUE LETTERING ON BLUE REFLECTORIZED BACKGROUND. ACCESS SIGNS SHALL BE CONSIDERED INCIDENTAL TO THE BID AND NOT PART OF THE CONTRACT UNLESS OTHERWISE STATED. NO MORE THAN 3 BUSINESSES SHALL BE LISTED ON A ACCESS SIGN. SHOPPING CENTERS AND MALLS SHALL BE LISTED AS SUCH.

18. ALL ADVANCE WARNING SIGNS SHALL MEET THE MINIMUM REFLECTIVE INTENSITY REQUIREMENTS SET FORTH BY THE CITY OF ALBUQUERQUE. CONSTRUCTION COORDINATION SHALL DETERMINE ALL REQUIREMENTS AND APPROVE OR DISAPPROVE ANY ADVANCE WARNING SIGN PER SECTION 6A-4 OF THE MUTCD, LATEST EDITION.

△2 19. 48 HOURS PRIOR TO OCCUPYING OR CLOSING OF A RIGHT-OF-WAY, CONTRACTOR SHALL NOTIFY: POLICE, FIRE DEPARTMENT, SCHOOLS, HOSPITALS, TRANSIT AUTHORITY, BUSINESSES AND/OR RESIDENTS THAT WILL BE AFFECTED BY THE CONSTRUCTION.

20. ANY FIELD ADJUSTMENTS SHALL BE APPROVED BY CONSTRUCTION COORDINATION.

21. EXCAVATIONS SHALL BE PLATED, TEMPORARILY PATCHED OR RESURFACED PRIOR TO OPENING OF TRAFFIC. A MINIMUM OF 11 FEET SHALL BE PROVIDED FOR TRAFFIC IN ANY GIVEN DIRECTION. CONTRACTOR IS RESPONSIBLE FOR ANY WORK INVOLVED IN SATISFYING THESE REQUIREMENTS.

22. CONTRACTOR SHALL AT ALL TIMES COMPLY WITH THE FOLLOWING:
   1. STANDARDS AND REQUIREMENTS SET FORTH IN THE MANUAL ON UNIFORM TRAFFIC CONTROL DEVICES, LATEST EDITION.
   2. THE CITY OF ALBUQUERQUE TRAFFIC CODE, LATEST EDITION.
   3. SECTION 19 OF THE CITY OF ALBUQUERQUE'S STANDARD SPECIFICATIONS FOR PUBLIC WORK CONSTRUCTION, AS WELL AS OTHER SECTIONS.

23. FAILURE TO COMPLY WITH ANY OF THE ABOVE MENTIONED, WILL BE ADEQUATE CAUSE TO CEASE ALL WORK ON ANY CONSTRUCTION PROJECT. WORK WILL NOT RESUME UNTIL ALL REQUIREMENTS ARE ADDRESSED AND APPROVED BY CONSTRUCTION COORDINATION.

24. ALL TRAFFIC CONTROL DEVICES SHALL BE KEPT IN NEW-CLEAN CONDITION, WASHING OF EQUIPMENT IS INCIDENTAL TO IT'S PLACEMENT AND MAINTENANCE.

25. TRAFFIC CONTROL STANDARDS APPLY ONLY WHERE THE CONSTRUCTION TRAFFIC CONTROL PLANS ARE NOT SPECIFIC.

△3 26. ADVANCE WARNING SIGNS SHALL BE 36"x36" MIN. WITH SUPER ENGINEERING GRADE SHEETING OR BETTER. MOUNTING HEIGHT AT TOP OF SIGN SHALL BE THE SAME AS FOR A 48" SIGN AS INDICATED IN THE M.U.T.C.D.

△4 27. CONTRACTOR SHALL MAINTAIN A GRAFFITI-FREE WORKSITE. ALL GRAFFITI SHALL BE PROMPTLY REMOVED FROM ALL EQUIPTMENT, BOTH PERMANENT AND TEMPORARY.

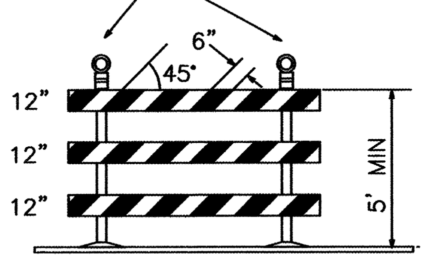

TYPE III BARRICADE

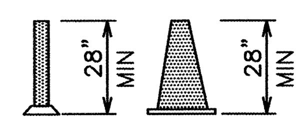

CONES

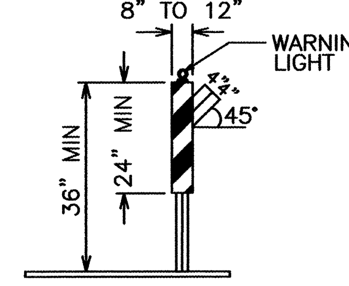

VERTICAL PANEL

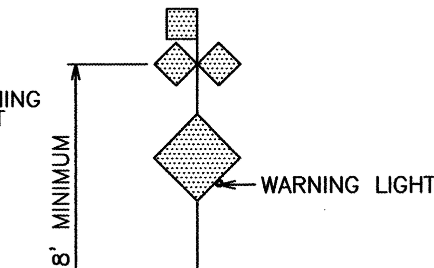

HIGH LEVEL WARNING DEVICE

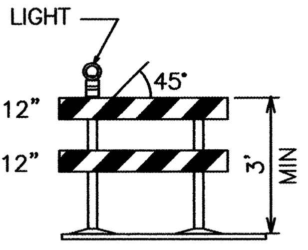

TYPE II BARRICADE COLLAPSIBLE

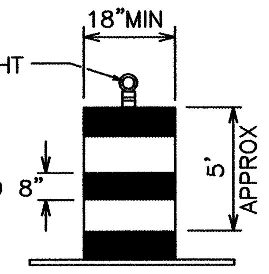

BARREL

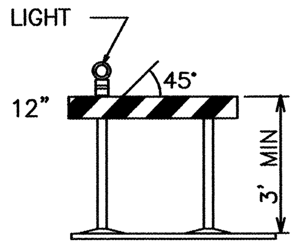

TYPE I BARRICADE COLLAPSIBLE

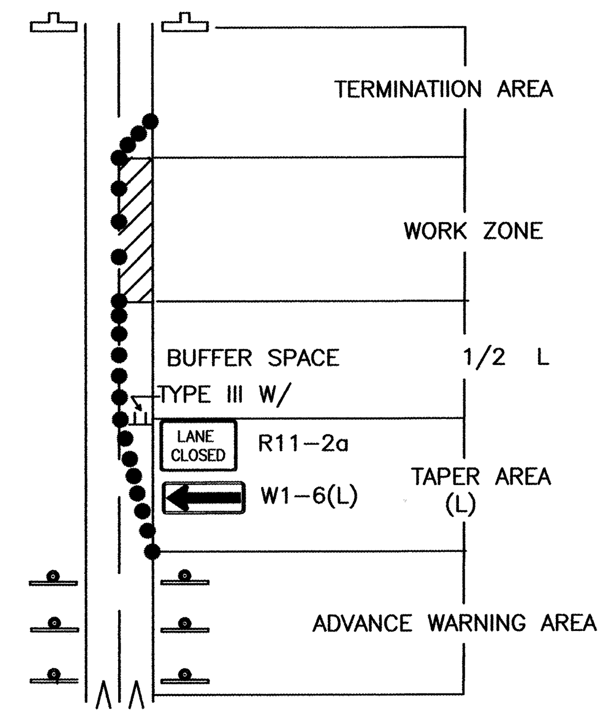

TRAFFIC CONTROL ELEMENTS

LEGEND

- WORK AREA
- BARRICADE – TYPE I, TYPE II, OR BARREL
- BARRICADE – TYPE III
- VERTICAL PANEL
- WARNING SIGN
- D — DISTANCE BETWEEN SIGNS – A DISTANCE MEASURED IN FEET EQUAL TO A VALUE OF TEN TIMES THE SPEED LIMIT OF THE STREET
- FLAGMAN POSITION
- S — SPACING BETWEEN BARRICADES – A DISTANCE MEASURED IN FEET EQUAL TO THE STREET LIMIT OF THE STREET
- L — TAPER LENGTH – SEE CHART BELOW

THE TANGENT LENGTH IS EQUAL TO THE TAPER LENGTH FOR A GIVEN STREET.

TAPER REQUIREMENT

SPEED LIMIT (MPH)	TAPER LENGTH(L) (FEET)			MINIMUM NUMBER OF DEVICES FOR TAPER	MAXIMUM DEVICE SPACING IN FEET	
	10' LANE	11' LANE	12' LANE		ALONG TAPER	AFTER TAPER
20	70	75	80	5	20	20
25	105	115	125	6	25	25
30	150	165	180	7	30	30
35	205	225	245	8	35	35
40	270	295	320	9	40	40
45	450	495	540	13	45	45
50	500	550	600	13	50	50
55	550	605	660	13	55	55

RECOMMENDED SIGN SPACING(D) FOR ADVANCE WARNING SIGN SERIES

SPEED MILES PER HOUR	MINIMUM DISTANCE IN FEET BETWEEN SIGNS	MINIMUM DISTANCE IN FEET FROM LAST SIGN TO TAPER
0-20	10 X SPEED LIMIT	10 X SPEED LIMIT
25-30	10 X SPEED LIMIT	10 X SPEED LIMIT
30-35	10 X SPEED LIMIT	10 X SPEED LIMIT
40-45	10 X SPEED LIMIT	10 X SPEED LIMIT
50-60	10 X SPEED LIMIT	10 X SPEED LIMIT

TAPER CRITERIA

TYPE OF TAPER	TAPER LENGTH
UPSTREAM TAPER:	
MERGING TAPER	L MINIMUM
SHIFTING TAPER	1/2 L MINIMUM
SHOULDER TAPER	1/2 L MINIMUM
TWO-WAY TRAFFIC TAPER	100 FEET MAXIMUM
DOWNSTREAM TAPERS	100 FEET PER LANE

TAPER LENGTH COMPUTATION

SPEED LIMIT	
40 MPH OR LESS	$L = \frac{WS^2}{60}$
40 MPH OR GREATER	$L = W \times S$

L = TAPER LENGTH
W = WIDTH OF OFFSET IN FEET
S = POSTED SPEED OR OFF-PEAK 85-PERCENTILE SPEED IN MPH

SIGN FACE DETAILS

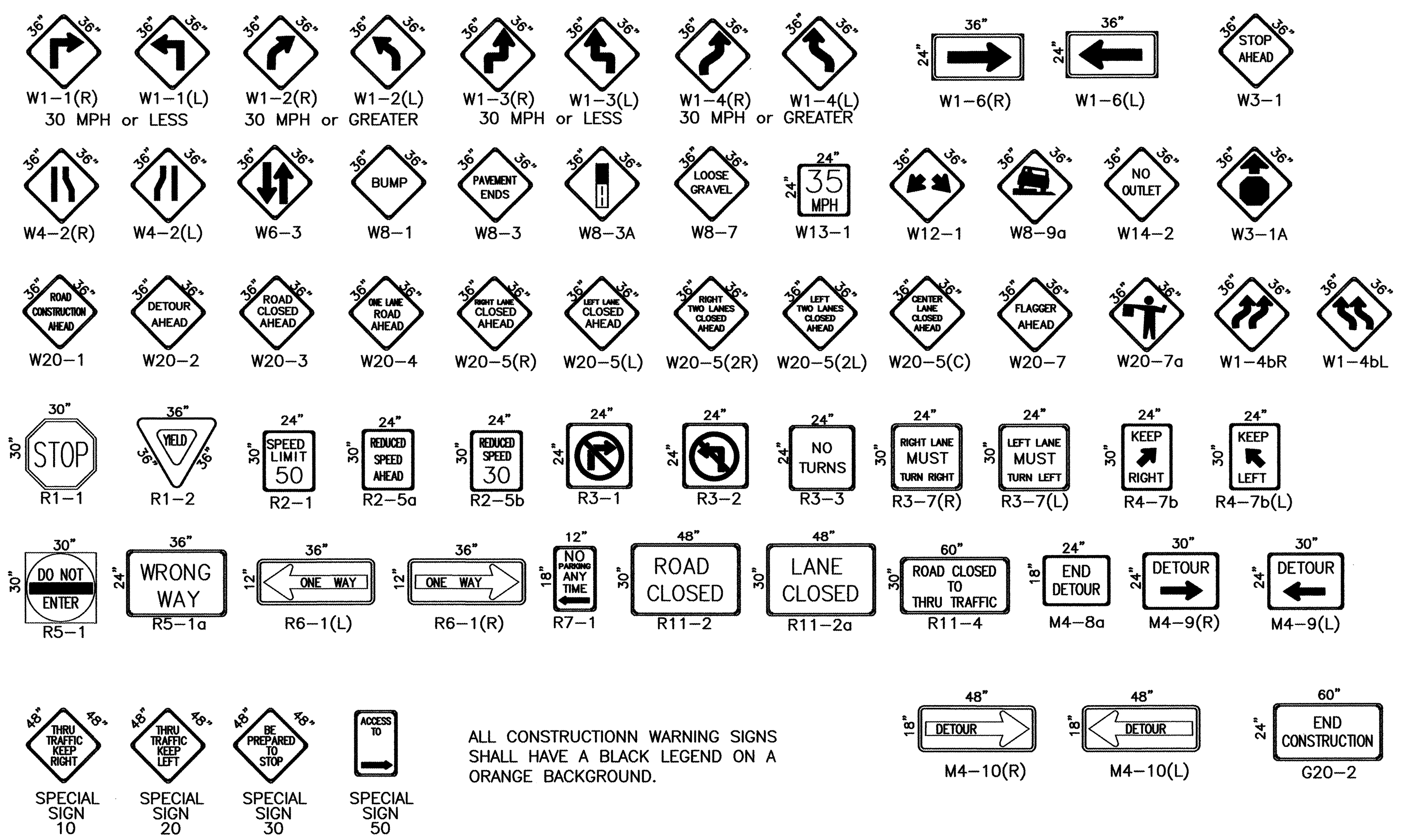

ALL CONSTRUCTIONN WARNING SIGNS SHALL HAVE A BLACK LEGEND ON A ORANGE BACKGROUND.

AS-BUILT INFORMATION
CONTRACTOR Sundance DATE
WORK STAKED BY AIS DATE 03
INSPECTOR'S ACCEPTANCE BY DATE
FIELD VERIFICATION BY AIS DATE 03
DRAWINGS CORRECTED BY AIS DATE 8/03
MICRO-FILM INFORMATION
RECORDED BY DATE
NO.

BENCH MARKS

SURVEY INFORMATION
FIELD NOTES
NO. BY DATE

ENGINEER'S SEAL
C.O.A. STANDARD

NO.	DATE	REMARKS	BY
△4	9/25/97	ADD NOTE NO. 27	J.D.L.
△3	9/24/97	REVISED NOTE NO. 26	J.D.L.
△2	9/24/97	REVISED NOTE NO. 19	J.D.L.
△1	9/24/97	REVISED NOTE NO. 11	J.D.L.

REVISIONS
DESIGN
DESIGNED BY BOHANNAN HUSTON DATE 5-97
DRAWN BY BOHANNAN HUSTON DATE 5-97
CHECKED BY BOHANNAN HUSTON DATE 5-97

CITY OF ALBUQUERQUE
PUBLIC WORKS DEPARTMENT
ENGINEERING DEVELOPMENT GROUP

TITLE: *VISTA DEL NORTE - UNIT 5A*

DESIGN REVIEW COMMITTEE	CITY ENGINEER APPROVAL	LAST DESIGN UPDATE	MO./DAY/YR.	MO./DAY/YR.
C.O.A. STANDARD	C.O.A. STANDARD			

CITY PROJECT NO. *682686*
ZONE MAP NO. *D-16*
SHEET *14* OF *15*

SCANNED BY MESA REPRO

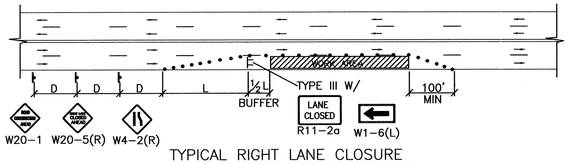

TYPICAL RIGHT LANE CLOSURE

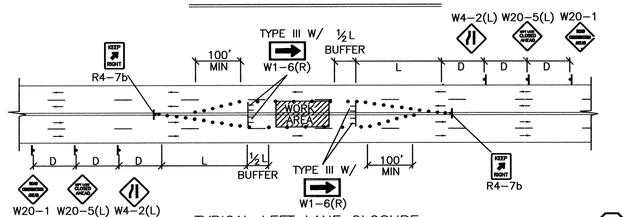

TYPICAL LEFT LANE CLOSURE

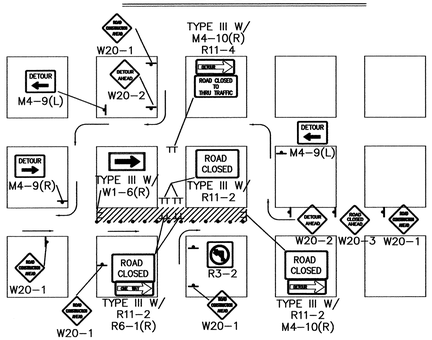

TYPICAL ONE DIRECTION DETOUR

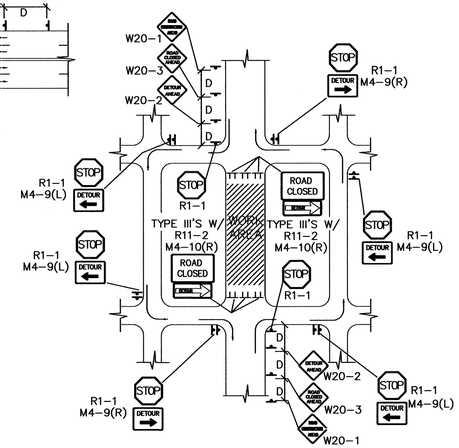

TYPICAL STREET CLOSURE

NOTE: (R1-1) BASED ON FIELD CONDITIONS.

NOTE:
MAY REQUIRE LEFT LANE CLOSURE DEPENDING ON FIELD CONDITIONS.

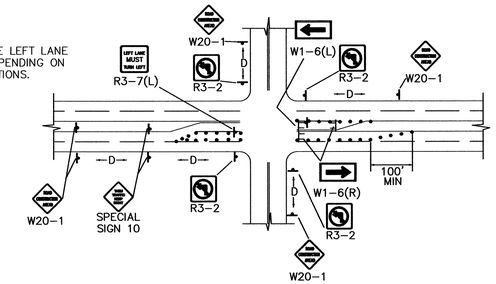

TYPICAL LANE CLOSURE AT INTERSECTION

NOTE: DEPENDING ON WORK ZONE LOCATION.

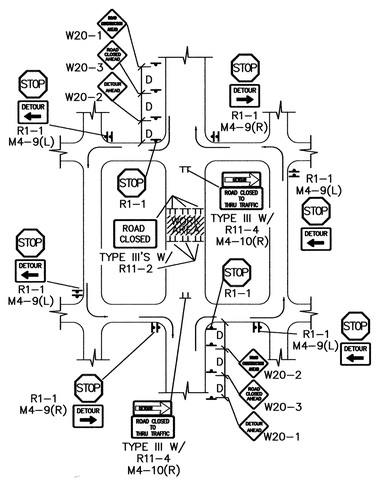

TYPICAL MID-BLOCK CLOSURE

NOTE: (R1-1) BASED ON FIELD CONDITIONS.

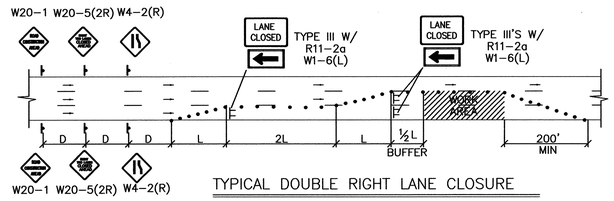

TYPICAL DOUBLE RIGHT LANE CLOSURE

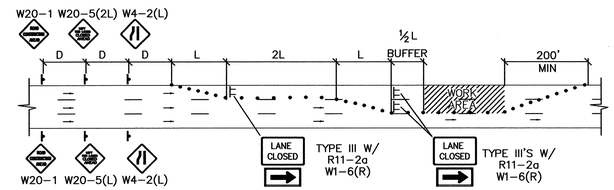

TYPICAL DOUBLE LEFT LANE CLOSURE

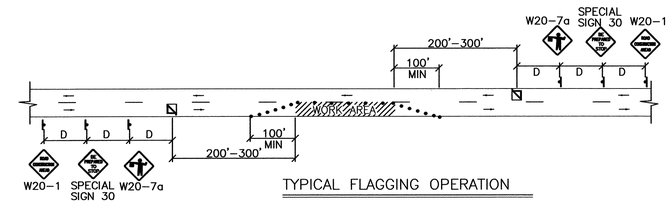

TYPICAL FLAGGING OPERATION

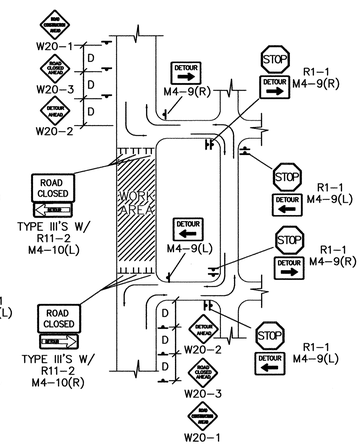

TYPICAL STREET CLOSURE

NOTE: (R1-1) BASED ON FIELD CONDITIONS.

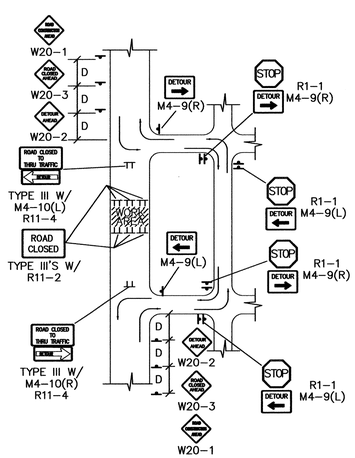

TYPICAL STREET CLOSURE

NOTE: (R1-1) BASED ON FIELD CONDITIONS.

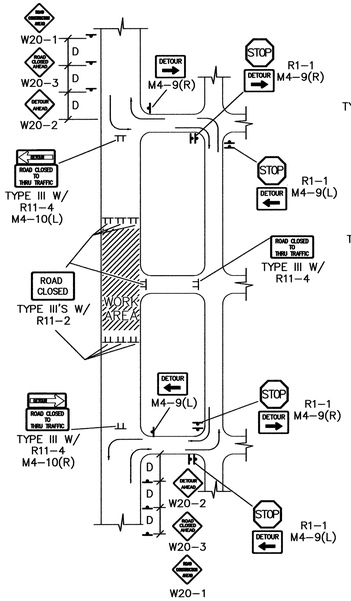

TYPICAL STREET CLOSURE

NOTE: (R1-1) BASED ON FIELD CONDITIONS.

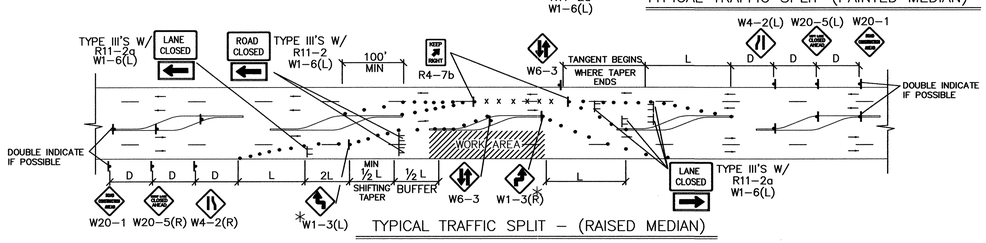

TYPICAL TRAFFIC SPLIT – (RAISED MEDIAN)

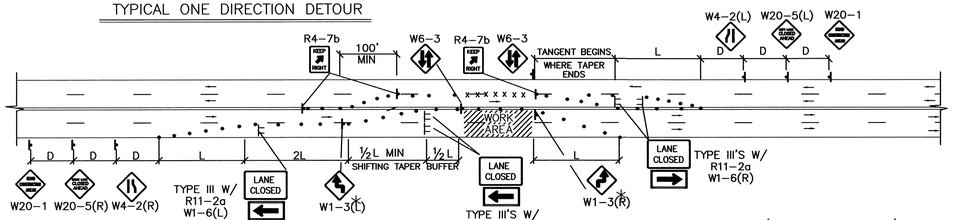

TYPICAL TRAFFIC SPLIT-(PAINTED MEDIAN)

TRAFFIC SPLIT NOTES:

1. THE OFFSET DISTANCE MUST BE CALCULATED IN ALL SHIFTING TAPERS. THE OFFSET DISTANCES SHALL INCLUDE LANE WIDTHS PLUS MEDIAN WIDTHS.
2. 1/2 L IS THE MINIMUM DISTANCE FOR SHIFTING TAPERS.
3. REVERSE CURVES MAY BE IMPLEMENTED. ALL CURVE DATA SHALL BE CALCULATED.
4. MEDIAN REMOVAL SHALL BE REQUIRED IF 1/2 L OR REVERSE CURVE IS NOT SUFFICIENT. MEDIAN REMOVAL SHALL TAKE PLACE BEFORE SPLITS.
5. REDUCED SPEED MAY BE CONSIDERED.
6. * USE W1-3 FOR 30 MPH OR LESS, W1-4 FOR SPEED 35 MPH OR GREATER.

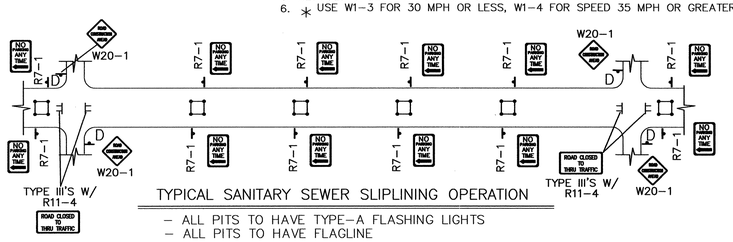

TYPICAL SANITARY SEWER SLIPLINING OPERATION

– ALL PITS TO HAVE TYPE-A FLASHING LIGHTS
– ALL PITS TO HAVE FLAGLINE

GENERAL NOTE:

ALL CONSTRUCTION WARNING SIGNS SHALL HAVE A BLACK LEGEND ON A ORANGE BACKGROUND.

⚠ ALL ADVANCE WARNING SIGNS SHALL BE A MINIMUM OF 36" THIRTY SIX INCHES BY 36" THIRTY SIX INCHES IN SIZE AND SHALL HAVE ONE WARNING LIGHT.

AS-BUILT INFORMATION
CONTRACTOR Sundance DATE
WORK STAKED BY DATE 03
INSPECTOR'S ACCEPTANCE BY DATE
FIELD VERIFICATION BY DATE 03
DRAWINGS CORRECTED BY DATE 03
MICRO-FILM INFORMATION 8/03
RECORDED BY DATE
NO.

BENCH MARKS

SURVEY INFORMATION
FIELD NOTES
NO. BY DATE

ENGINEER'S SEAL

C.O.A. STANDARD

NO.	DATE	REMARKS	BY
1	9/24/97	REVISED GENERAL NOTE	J.D.L.

REVISIONS

DESIGN	
DESIGNED BY BOHANNAN HUSTON	DATE 5-97
DRAWN BY BOHANNAN HUSTON	DATE 5-97
CHECKED BY BOHANNAN HUSTON	DATE 5-97

CITY OF ALBUQUERQUE
PUBLIC WORKS DEPARTMENT
ENGINEERING DEVELOPMENT GROUP

TITLE: VISTA DEL NORTE - UNIT 5A

DESIGN REVIEW COMMITTEE	CITY ENGINEER APPROVAL	LAST DESIGN UPDATE	MO./DAY/YR.	MO./DAY/YR.
C.O.A. STANDARD	C.O.A. STANDARD			

CITY PROJECT NO.	ZONE MAP NO.	SHEET	OF
682686	D-16	15	15

SCANNED BY MESA REPRO

[BHI-MAIN\PROJECTS\97177\TRANS\DESIGN\SIGNAL]CITYTRAF.DWG Fri Jan 10 08:36:54 2003 D. MARK GOODWIN & ASSOCIATES, PLOTTED BY: ACH

F:\AOJOBS\A10050\DN\Un15a\cityfraf.dwg

CITYTRAF.DWG 6-11-97