CONSTRUCTION PLANS

FOR

VISTA PACIFICA SUBDIVISION

PAVING & UTILITY IMPROVEMENTS

CITY OF ALBUQUERQUE
NEW MEXICO
OCTOBER 2002

SCANNED BY MESA REPRO

INDEX TO DRAWINGS

1/21117/21117TITL.DWG/BDG/10-07-02

CERTIFICATE OF SUBSTANTIAL COMPLIANCE ON PLANS

I, Ronald R. Bohannan, of the firm of Tierra West LLC, a Registered Professional Engineer in the State of New Mexico, do hereby certify, to the best of my knowledge and belief, that the infrastructure installed as part of this project has been inspected by me or by a qualified person under my direct supervision and has been constructed in accordance with the plans and specifications approved by the City Engineer and that the original design intent of the approved plans has been met, except as noted by me on the as-built construction drawings. This Certification is based on site inspections by me, or personnel under my direction with survey information provided by Russ P. Hugg, of Surv-Tek, NMPS number 9750.

Engineer's Seal & Signature

APPROVED AS RECORD DRAWINGS
DESIGN REVIEW SECTION
CITY CONSTRUCTION ENGINEER
DATE 11/12/03

DRB # 1001764

TIERRA WEST, LLC
8509 JEFFERSON NE
ALBUQUERQUE, NEW MEXICO 87113
(505)858-3100

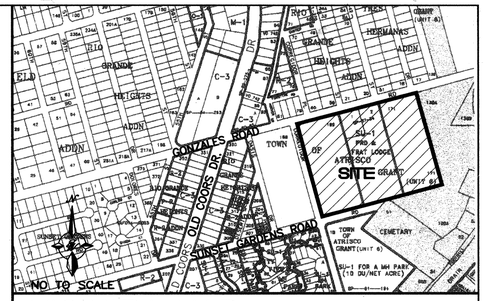

VICINITY MAP ZONE ATLAS K-11--Z

NOTICE TO CONTRACTORS

1. ALL WORK DETAILED ON THESE PLANS TO BE PERFORMED UNDER CONTRACT SHALL, EXCEPT AS OTHERWISE STATED OR PROVIDED FOR HEREON, BE CONSTRUCTED IN ACCORDANCE WITH THE CITY OF ALBUQUERQUE STANDARD SPECIFICATIONS FOR PUBLIC WORKS CONSTRUCTION, 1986 EDITION (UPDATE #6)

2. TWO WORKING DAYS PRIOR TO ANY EXCAVATION, THE CONTRACTOR MUST CONTACT NEW MEXICO ONE CALL SYSTEM (260-1990) FOR LOCATION OF EXISTING UTILITIES.

3. ANY WORK AFFECTING AN ARTERIAL ROADWAY REQUIRES 24-HOUR CONSTRUCTION.

4. PRIOR TO CONSTRUCTION, THE CONTRACTOR SHALL EXCAVATE AND VERIFY THE HORIZONTAL AND VERTICAL LOCATIONS OF ALL OBSTRUCTIONS. SHOULD A CONFLICT EXIST, THE CONTRACTOR SHALL NOTIFY THE ENGINEER OR SURVEYOR IMMEDIATELY SO THAT THE CONFLICT CAN BE RESOLVED WITH A MINIMUM AMOUNT OF DELAY.

5. FIVE (5) WORKING DAYS PRIOR TO BEGINNING OF CONSTRUCTION, THE CONTRACTOR SHALL SUBMIT TO CONSTRUCTION COORDINATIONS DIVISION A DETAILED CONSTRUCTION SCHEDULE. TWO (2) WORKING DAYS PRIOR TO CONSTRUCTION, THE CONTRACTOR SHALL OBTAIN A BARRICADING PERMIT FROM THE CONST. COORDINATION DIVISION. CONTRACTOR SHALL NOTIFY BARRICADE ENGINEER (924-3100) PRIOR TO OCC-UPYING AN INTERSECTION. REFER TO STANDARD SPECIFICATIONS.

6. ALL STREET STRIPING ALTERED OR DESTROYED SHALL BE REPLACED WITH PLASTIC REFLECTORIZED PAVEMENT MARKINGS BY THE CONTRACTOR TO LOCATION AS EXISTING OR AS INDICATED BY THIS PLAN SET.

7. CONTRACTOR SHALL NOTIFY THE ENGINEER NOT LESS THAN SEVEN (7) DAYS PRIOR TO STARTING WORK IN ORDER THAT THE ENGINEER MAY TAKE NECESSARY MEASURES TO INSURE THE PRESERVATION OF SURVEY MONUMENTS. CONTRACTOR SHALL NOT DISTURB PERMANENT SURVEY MONUMENTS WITHOUT THE CONSENT OF THE ENGINEER AND SHALL NOTIFY THE ENGINEER AND BEAR THE EXPENSE OF REPLACING ANY THAT MAY BE DISTURBED WITHOUT PERMISSION. REPLACEMENT SHALL BE DONE ONLY BY THE CITY SURVEYOR. WHEN A CHANGE IS MADE IN THE FINISHED ELEVATIONS OF THE PAVEMENT OF ANY ROADWAY IN WHICH A PERMANENT SURVEY MONUMENT IS LOCATED, CONTRACTOR SHALL, AT HIS OWN EXPENSE, ADJUST THE MONUMENT COVER TO THE NEW GRADE UNLESS OTHERWISE SPECIFIED. REFER TO SECTION 4.4 OF THE GENERAL CONDITIONS OF THE STANDARD SPECIFICATIONS. ANY PERMANENT SURVEY MONUMENT LOCATED WITHIN 50' OF THIS PROJECT THAT IS NOT SHOWN ON THE PLAN AND IS DESTROYED DURING CONSTRUCTION WILL BE REPLACED AT THE DESIGNERS EXPENSE.

8. FOR STORM DRAIN CONSTRUCTION, RCP PIPE JOINTS SHALL NOT BE GROUTED PRIOR TO FINAL INSPECTION. FINAL INSPECTION WILL DETERMINE JOINTS TO BE GROUTED FOR FINAL ACCEPTANCE OF THE CONSTRUCTION.

9. THE SUBJECT PROPERTY IS LOCATED NEAR A FORMER LANDFILL. DUE TO THE SUBJECT PROPERTY BEING NEAR A FORMER LANDFILL, CERTAIN PRECAUTIONARY MEASURES MAY NEED TO BE TAKEN TO ENSURE THE HEALTH AND SAFETY OF THE PUBLIC. RECOMMENDATIONS MADE BY A PROFESSIONAL ENGINEER WITH EXPERTISE IN LANDFILLS AND LANDFILL GAS ISSUES (AS REQUIRED BY THE MOST CURRENT VERSION OF THE "INTERIM GUIDELINES FOR DEVELOPMENT WITHIN 1000 FEET OF LANDFILLS") SHALL BE CONSULTED PRIOR TO DEVELOPMENT OF THE SITE.

THE FOLLOWING NOTES ALSO APPLY WHEN CHECKED

- [x] ALL UTILITIES AND UTILITY SERVICE LINES SHALL BE INSTALLED PRIOR TO PAVING.
- [x] BACKFILL COMPACTION SHALL BE ACCORDING TO SPECIFIED STREET USE.
- [x] TACK COAT REQUIREMENTS SHALL BE DETERMINED BY THE PROJECT ENGINEER.
- [x] SIDEWALKS AND WHEELCHAIR RAMPS WITHIN THE CURB RETURNS SHALL BE CONSTRUCTED WHEREVER A NEW CURB RETURN IS CONSTRUCTED.
- [x] IF CURB IS DEPRESSED FOR A DRIVEPAD, THE DRIVEPAD SHALL BE CONSTRUCTED PRIOR TO ACCEPTANCE OF CURB AND GUTTER.
- [x] ALL STORM DRAINAGE FACILITIES SHALL BE COMPLETED PRIOR TO FINAL ACCEPTANCE.

REV	SHEETS	CITY ENGINEER	DATE	USER DEPT.	DATE	USER DEPT.	DATE

ENGINEERS STAMP & SIGNATURE

APPROVALS	ENGINEER	DATE
DRC Chairman		01-08-03
Transportation		12/2/02
Water/Wastewater		12/26/02
Hydrology		12-12-02
Env. Health		1/23/2003
Constr. Mngmt.		
Constr. Coord.		01-08-03

APPROVED FOR CONSTRUCTION

City Engineer 1/10/03 Date

CITY PROJECT NO. 695081

SHEET 1 OF 25

PLAT OF
VISTA PACIFICA SUBDIVISION

(BEING A REPLAT OF TRACTS 169 AND 171, TOWN OF ATRISCO GRANT, UNIT 6
LOTS 1 AND 2, TOWN OF ATRISCO GRANT, UNIT 6
AND A VACATED PORTION OF CORREGIDOR DRIVE S.W.)
WITHIN THE TOWN OF ATRISCO GRANT
CITY OF ALBUQUERQUE
BERNALILLO COUNTY, NEW MEXICO

AUGUST, 2002

PRELIMINARY DRAWING

Note for Reference Only

SCANNED BY MESA REPRO

SCANNED BY MESA REPRO

LEGAL DESCRIPTION

That certain parcel of land situate within the Town of Atrisco Grant, City of Albuquerque, Bernalillo County, New Mexico being and comprising: All of Tracts 169 and 171, Unit No. 6, Town of Atrisco Grant, City of Albuquerque, Bernalillo County, New Mexico, as the same are shown and designated on the plat entitled "PLAT SHOWING A PORTION OF TRACTS ALLOTTED FROM TOWN OF ATRISCO GRANT IN SCHOOL DISTRICT 28, BERNALILLO COUNTY, NEW MEXICO", filed for record in the office of the County Clerk of Bernalillo County, New Mexico, on December 5, 1944, in Volume D, Folio 118; All of Lots 1 and 2, Unit No. 6, Town of Atrisco Grant, City of Albuquerque, Bernalillo County, New Mexico, as the same are shown and designated on the plat entitled "SUBDIVISION PLAT OF TRACT 170, UNIT 6, ALLOTTED FROM THE TOWN OF ATRISCO GRANT, ALBUQUERQUE, BERNALILLO COUNTY, NEW MEXICO, DECEMBER, 1966", filed for record in the office of the County Clerk of Bernalillo County, New Mexico, on January 30, 1987, in Volume C32, Folio 169 and that certain Easterly portion of vacated Corregidor Drive S.W. vacated by 02DRB 01106 (VAC), more particularly described by survey performed by Russ P. Hugg, New Mexico Professional Surveyor Number 9750 using New Mexico State Plane Coordinate System, Central Zone (NAD 27) grid bearings and ground distances as follows:

Beginning at the Southwest corner of the parcel herein described, a point of intersection of the Northerly right of way line of Sunset Gardens Road S.W. with the Easterly right of way line of Corregidor Drive S.W. (a 5/8" rebar and cap stamped "L.S. 9750" found in place), said point also being the Southwest corner of said Tract 169 whence the Albuquerque Control Survey Monument "NM45-4A" bears S 34° 56' 38" W, 3134.70 feet distant; Thence,

N 14° 57' 44" W,	171.65 feet along said Easterly right of way line of Corregidor Drive S.W. to a point of the vacated portion of Corregidor Drive S.W. vacated by 02DRB 01106 (VAC); Thence Southwesterly and Northwesterly along said vacated portion of Corregidor Drive S.W. for the following three (3) courses:
S 75° 02' 16" W,	5.00 feet to a point; Thence,
N 14° 57' 44" W,	542.59 feet to a point; Thence,
N 75° 02' 16" E,	5.00 feet to the Northwest corner of said Tract 169 (a 5/8" rebar and cap stamped "L.S. 9750" found in place; Thence,
N 74° 59' 11" E,	304.85 feet to the Northwest corner of said Lot 1, Town of Atrisco Grant, Unit 6 (a 5/8" rebar and cap stamped "L.S. 9750" found in place; Thence,
N 75° 04' 25" E,	149.95 feet to the Northeast corner of said Lot 1, Town of Atrisco Grant Unit 6 (a 5/8" rebar found in place; Thence,
N 75° 04' 25" E,	155.03 feet to the Northeast corner of said Lot 2, Town of Atrisco Grant Unit 6 (a 5/8" rebar and cap stamped "L.S. 10204" found in place; Thence,
N 75° 04' 25" E,	305.36 feet to the Northeast corner of said Tract 171 (a 1/2" rebar found in place)and the Northeast corner of the parcel herein described; Thence,
S 14° 57' 12" E,	713.54 feet to the Southwest corner of said Tract 171 (a 1/2" rebar found in place)and the Southeast corner of the parcel herein described; Thence,
S 74° 59' 19" W,	305.20 feet to the Southwest corner of said Tract 171 (a 1" iron pipe found in place); Thence,
S 75° 00' 25" W,	120.85 feet to a point on the Northeasterly line of Tract 51, M.R.G.C.D. Map Number 39(a 5/8" rebar and cap stamped "L.S. 1867" found in place) said point also being a point on the Southerly line of said Lot 2, Town of Atrisco Grant Unit 6; Thence along a line common to said Lot 2 and said Tract 51 for the following two (2) courses:
N 57° 00' 49" W,	6.87 feet to the Northeast corner of said Tract 51; Thence,
S 41° 01' 36" W,	9.13 feet to a point on the Northerly line of said Tract 51 (a 5/8" rebar and cap stamped "L.S. 1867" found in place) said point being a point on said Southerly line of Lot 2 and said Northerly right of way line of Sunset Gardens Road S.W.; Thence Southwesterly along said Northerly right of way line of Sunset Gardens Road S.W. for the following two (2) courses:
S 75° 00' 25" W,	172.05 feet to the Southeast corner of said Tract 169 (a 1" iron pipe found in place); Thence,
S 75° 00' 25" W,	305.00 feet to the Southwest corner and point of beginning of the parcel herein described.

Said Parcel contains 15.0666 acres, more or less.

FREE CONSENT AND DEDICATION

SURVEYED and REPLATTED and now comprising "PLAT OF VISTA PACIFICA SUBDIVISION (BEING A REPLAT OF TRACTS 169 AND 171, TOWN OF ATRISCO GRANT, UNIT 6; LOTS 1 AND 2, TOWN OF ATRISCO GRANT, UNIT 6 AND A VACATED PORTION OF CORREGIDOR DRIVE S.W.), WITHIN THE TOWN OF ATRISCO GRANT, CITY OF ALBUQUERQUE, BERNALILLO COUNTY, NEW MEXICO" with the free consent of and in accordance with the wishes and desires of the undersigned owner(s) and proprietor(s) thereof. Said owner(s) and proprietor(s) do hereby dedicate the street right of ways as shown hereon to the City of Albuquerque in fee simple with warranty covenants. Said owner(s) and proprietor(s) do hereby grant to the use of the public forever the public utility easements as shown hereon. Said owner(s) and proprietor(s) do hereby consent to all of the foregoing and do hereby represent that they are so authorized to act.

Owner

AIM Management Corporation, a New Mexico corporation

BY:_____

Jeffery Jeslanowski, President

ACKNOWLEDGMENT

STATE OF NEW MEXICO
COUNTY OF BERNALILLO SS

This instrument was acknowledged before me on this _____ day of_____ 2002, by Jeffery Jeslanowski.

_____
Notary Public

_____
My Commission expires

LINE TABLE

LINE	LENGTH	BEARING
L1	10.00	N14°55'35"W
L2	23.00	N75°04'25"E
L3	23.00	N75°04'25"E
L4	5.00	S75°02'16"W
L5	25.01	N75°00'25"E
L6	25.01	S14°57'44"E
L7	24.98	S14°57'44"E
L8	5.00	N75°02'16"E
L9	19.98	N74°59'11"E
L10	6.87	N57°00'49"W
L11	9.13	S41°01'36"W
L12	5.00	S75°02'17"W
L13	5.00	N75°02'17"E

CURVE TABLE

CURVE	RADIUS	LENGTH	TANGENT	CHORD	BEARING	DELTA
C1	25.00'	39.27'	24.98'	35.34'	S59°56'39"E	89°57'11"
C2	25.00'	39.26'	25.02'	35.37'	S30°03'21"W	90°02'09"
C3	25.00'	39.26'	24.99'	35.35'	N59°56'23"W	89°58'23"
C4	25.00'	39.28'	25.11'	35.16'	S30°03'37"W	90°01'37"
C5	25.00'	39.26'	24.99'	35.35'	N59°56'23"W	89°58'23"
C6	25.00'	39.28'	25.01'	35.36'	S30°03'37"W	90°01'37"
C7	25.00'	39.26'	24.99'	35.35'	N59°56'23"W	89°58'23"
C8	25.00'	39.28'	25.01'	35.36'	S30°03'37"W	90°01'37"
C9	25.00'	39.26'	24.99'	35.35'	N59°56'23"W	89°58'23"
C10	25.00'	39.28'	25.01'	35.36'	N30°03'37"E	90°01'37"
C11	25.00'	39.29'	25.02'	35.37'	S59°58'23"E	90°02'21"
C12	25.00'	39.25'	24.98'	35.34'	N30°01'37"E	89°57'37"
C13	25.00'	39.29'	25.02'	35.37'	S59°58'23"E	90°02'23"
C14	25.00'	39.27'	24.98'	35.34'	N30°01'37"E	89°57'37"
C15	25.00'	39.29'	25.02'	35.37'	S59°58'23"E	90°02'23"
C16	25.00'	39.25'	24.98'	35.34'	N30°01'37"E	89°57'37"
C17	25.00'	39.26'	24.99'	35.35'	S30°01'21"W	89°58'09"
C18	25.00'	39.28'	25.01'	35.36'	S59°58'39"E	90°01'51"
C19	25.00'	39.25'	24.98'	35.34'	S30°00'44"W	89°56'55"
C20	25.00'	20.38'	10.79'	19.82'	N08°24'03"E	46°42'29"
C21	25.00'	20.38'	10.79'	19.82'	S38°18'26"E	46°42'29"
C22	45.00'	214.74'	42.39'	6.71'	N77°02'46"E	273°24'59"
C23	25.00'	15.47'	7.99'	15.23'	N02°45'33"E	35°27'29"
C24	25.00'	4.91'	2.46'	4.90'	N26°07'48"E	11°15'00"
C25	45.00'	45.28'	24.77'	43.39'	S02°55'43"W	57°39'11"
C26	45.00'	22.55'	11.52'	22.32'	S40°15'22"E	28°42'56"
C27	45.00'	26.34'	13.56'	25.97'	S71°23'05"E	33°32'30"
C28	45.00'	26.34'	13.56'	25.97'	N73°10'25"E	33°32'30"
C29	45.00'	26.34'	13.56'	25.97'	N41°37'55"E	33°32'30"
C30	45.00'	22.55'	11.52'	22.32'	N10°24'12"E	28°42'56"
C31	45.00'	45.32'	24.79'	43.43'	N32°48'29"W	57°42'25"
C32	25.00'	4.88'	2.45'	4.87'	S56°04'23"E	11°10'37"
C33	25.00'	15.50'	8.01'	15.26'	S32°43'08"E	35°31'53"
C34	25.00'	39.28'	25.01'	35.36'	S56°58'40"E	90°01'52"

SHEET 2 OF 4

SURVOTEK, INC.
Consulting Surveyors
5645 Paradise Blvd. N.W. Albuquerque, New Mexico 87114
Phone: 505-897-3366
Fax: 505-897-3377

002512. DWG

PLAT OF
VISTA PACIFICA SUBDIVISION

(BEING A REPLAT OF TRACTS 169 AND 171, TOWN OF ATRISCO GRANT, UNIT 6
LOTS 1 AND 2, TOWN OF ATRISCO GRANT, UNIT 6
AND A VACATED PORTION OF CORREGIDOR DRIVE S.W.)
WITHIN THE TOWN OF ATRISCO GRANT
CITY OF ALBUQUERQUE
BERNALILLO COUNTY, NEW MEXICO

AUGUST, 2002

PRELIMINARY DRAWING

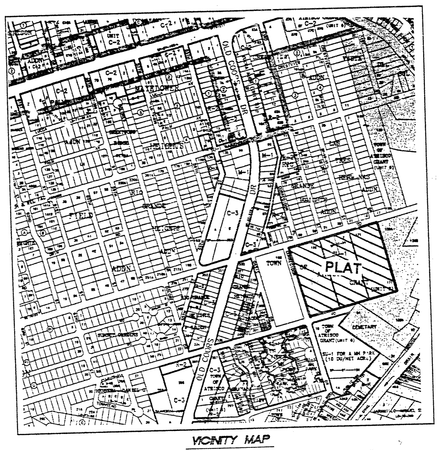

VICINITY MAP
Not to Scale

GENERAL NOTES

1. Bearings are grid based upon the New Mexico State Plane Coordinate System, Central Zone (NAD 27) and rotated to grid at the Albuquerque Survey Control Monument "NM-48-4A".
2. Distances are ground.
3. Distances along curved lines are arc lengths.
4. Record plat bearings and distances where they differ from those measured by field survey are shown in parenthesis ( ).
5. All corners are a 5/8" rebar and cap stamped "HUGG L.S. 9750" unless otherwise indicated hereon.
6. Albuquerque City Zone Atlas page K-11-Z.
7. All street centerline monumentation shall be installed at all centerline POC's, PT's, angle points and street intersections and shown thus ◎. All centerline monumentation will be set using the standard four (4") aluminum monument stamped "City of Albuquerque Centerline Monument- Do not disturb, PS Number 9750" and will be set flush with the final asphalt lift.
8. Manholes will be offset at all points of curvature, points of tangency, street intersections, and all other angle points to allow use of centerline monumentation.
9. Total number of Lots created: 104
10. Total mileage of full width streets created: 0. 50 mile.
11. Gross Subdivision acreage: 15.0666 acres.
12. U.C.L.S. Log Number 2002351572.
13. Vertical Datum is based upon the Albuquerque Control Survey Monument "NM-48-4A", having an elevation of 5002.98 (NAVD 29).
14. Field surveys were performed during the month of March 2002.
15. Documents used in the preparation of this survey are as follows:

A. Plat entitled "PLAT SHOWING A PORTION OF TRACTS ALLOTTED FROM TOWN OF ATRISCO GRANT IN SCHOOL DISTRICT 28, BERNALILLO COUNTY, NEW MEXICO", filed for record in the office of the County Clerk of Bernalillo County, New Mexico, on December 5, 1944, in Volume D, Folio 118.

B. Plat entitled "SUBDIVISION PLAT OF TRACT 170, UNIT 6, ALLOTTED FROM THE TOWN OF ATRISCO GRANT, ALBUQUERQUE, BERNALILLO COUNTY, NEW MEXICO, DECEMBER, 1966", filed for record in the office of the County Clerk of Bernalillo County, New Mexico, on January 30, 1987, in Volume C32, Folio 169.

DISCLOSURE STATEMENT

The Purpose of this replat is to: Eliminate the existing interior Tract/Lot lines and create the 104 residential lots as shown hereon; Dedicate the street right of ways as shown hereon to the City of Albuquerque in fee simple with warranty covenants; to show that portion of Corregidor Drive S.W. vacated by 02DRB 01106 (VAC) and grant the public utility easements as shown hereon.

APPROVALS

PNM Gas Services	Date 9-13-02
PNM Electric Services	Date 9-13-02
QWest Communications	Date
Comcast Cable	Date 9-13-02

PUBLIC UTILITY EASEMENTS

PUBLIC UTILITY EASEMENTS shown on this plat are granted for the common and joint use of:

A. PNM Electric Services for installation, maintenance, and service of overhead and underground electrical lines, transformers, and other equipment and related facilities reasonably necessary to provide electrical service.

B. PNM Gas Services for installation, maintenance, and service of natural gas lines, valves and other equipment and facilities reasonably necessary to provide natural gas.

C. QWest Communications for the installation, maintenance, and service of such lines, cable, and other related equipment and facilities reasonably necessary to provide communication services, including but not limited to ground pedestals and closures.

D. Comcast Cable for the installation, maintenance, and service of such lines, cable, and other related equipment and facilities reasonably necessary to provide Cable TV service.

Included, is the right to build, rebuild, construct, reconstruct, locate, relocate, change, remove, modify, renew, operate, and maintain facilities for the purposes described above, together with free access to, from, and over said easements, including sufficient working area space for electric transformers, with the right and privilege to trim and remove trees, shrubs or bushes which interfere with the purposes set forth herein. No building, sign, pool (aboveground or subsurface), hot tub, concrete or wood pool decking, or other structure shall be erected or constructed on said easements, nor shall any well be drilled or operated thereon. Property owners shall be solely responsible for correcting any violations of National Electrical Safety Code by construction of pools, decking, or any structures adjacent to or near easements shown on this plat.

Easements for electric transformers/switchgears, as installed, shall extend ten feet (10') in front of transformer/switchgear doors and five feet (5') on each side.

DISCLAIMER

In approving this plat, PNM Electric Services and Gas Services (PNM) did not conduct a Title Search of the properties shown hereon. Consequently, PNM does not waive nor release any easement or easement rights to which it may be entitled.

APPROVALS

Traffic Engineer, City of Albuquerque Public Works Department	Date
City Surveyor, City of Albuquerque Public Works Department	Date
Utility Development Division, City of Albuquerque Public Works Department	Date
Albuquerque Metropolitan Arroyo Flood Control Authority	Date
City Engineer, City of Albuquerque Public Works Department	Date
Property Management, City of Albuquerque	Date
Parks and Recreation, City of Albuquerque	

APPROVAL as specified by the Albuquerque Subdivision Ordinance.

Chair, Albuquerque Development Review Board	Date

Project No. DRB 1001764

Application No. 02DRB 001105 (PP)
02DRB 001106 (VAC)
02DRB 1107 (TDSW)

SURVEYORS CERTIFICATION

I, Russ P. Hugg, New Mexico Professional Surveyor Number 9750, hereby certify that this plat of survey was prepared from field notes of an actual ground survey performed by me or under my supervision; that it meets the Standards for Land Surveys in New Mexico as adopted by the New Mexico State Board of Registration for Professional Engineers and Professional Surveyors; that it meets the minimum requirements for surveys and monumentation of the Bernalillo County and City of Albuquerque Subdivision Ordinances; that it shows all easements of record; and that it is true and correct to the best of my knowledge and belief.

Russ P. Hugg
NMPS No. 9750
August 28, 2002

PROFESSIONAL SURVEYOR STATE OF NEW MEXICO No. 9750 RUSS P. HUGG

SHEET 1 OF 4

SURVOTEK, INC.
Consulting Surveyors
5645 Paradise Blvd. N.W. Albuquerque, New Mexico 87114
Phone: 505-897-3366
Fax: 505-897-3377

002512. DWG

SCANNED BY MESA REPRO

PLAT OF VISTA PACIFICA SUBDIVISION

(BEING A REPLAT OF TRACTS 169 AND 171, TOWN OF ATRISCO GRANT, UNIT 6
LOTS 1 AND 2, TOWN OF ATRISCO GRANT, UNIT 6
AND A VACATED PORTION OF CORREGIDOR DRIVE S.W.)
WITHIN THE TOWN OF ATRISCO GRANT
CITY OF ALBUQUERQUE
BERNALILLO COUNTY, NEW MEXICO
AUGUST, 2002

PLAT BOUNDARY

Scale 1"= 100'

PRELIMINARY DRAWING

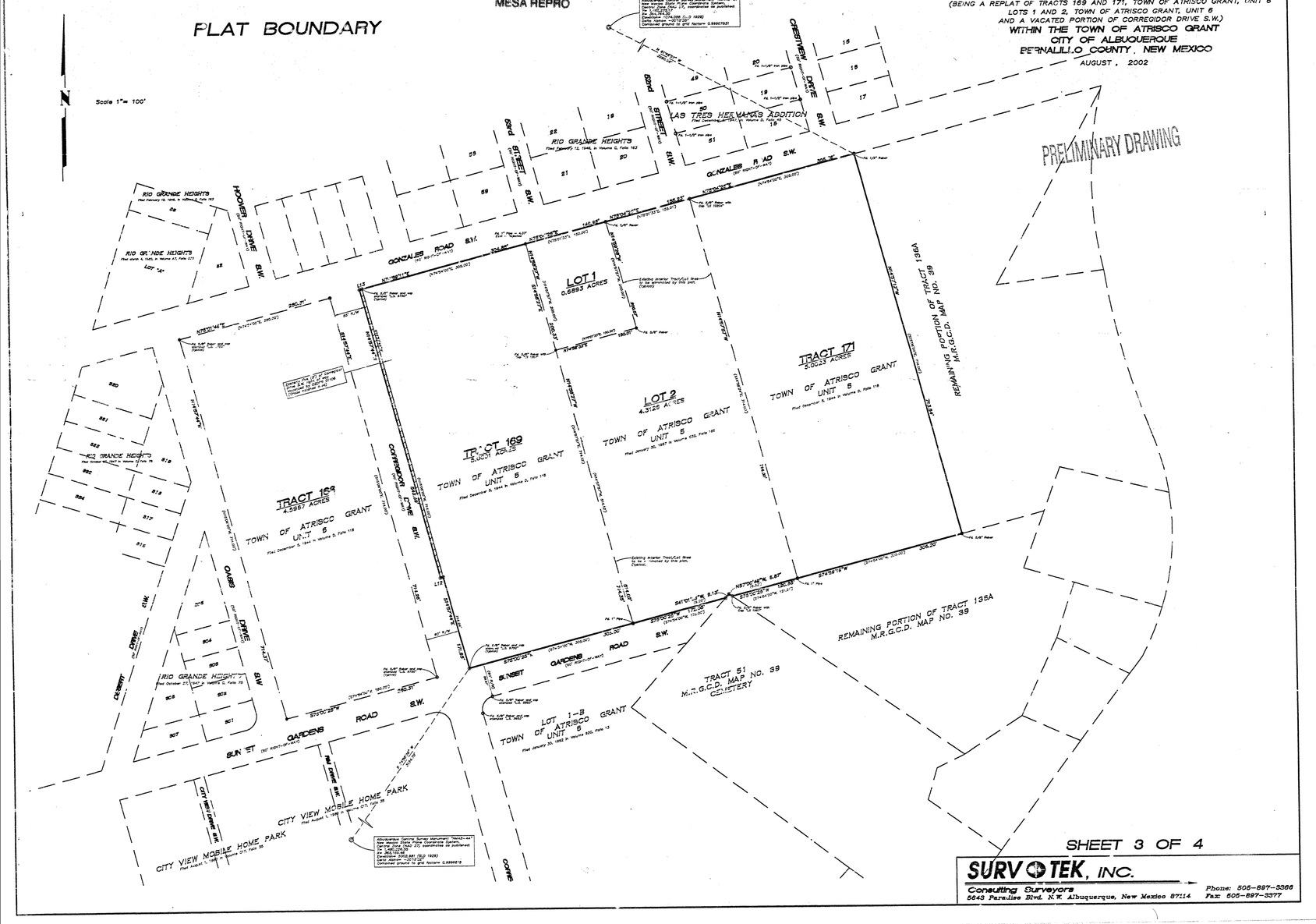

SHEET 3 OF 4

SURVOTEK, INC.
Consulting Surveyors
5643 Paradise Blvd. N.W. Albuquerque, New Mexico 87114
Phone: 505-897-3366
Fax: 505-897-3377

Note for Reference Only

PLAT OF VISTA PACIFICA SUBDIVISION

(BEING A REPLAT OF TRACTS 169 AND 171, TOWN OF ATRISCO GRANT, UNIT 6
LOTS 1 AND 2, TOWN OF ATRISCO GRANT, UNIT 6
AND A VACATED PORTION OF CORPEGIDOR DRIVE S.W.)
WITHIN THE TOWN OF ATRISCO GRANT
CITY OF ALBUQUERQUE
BERNALILLO COUNTY, NEW MEXICO
AUGUST, 2002

PRELIMINARY DRAWING

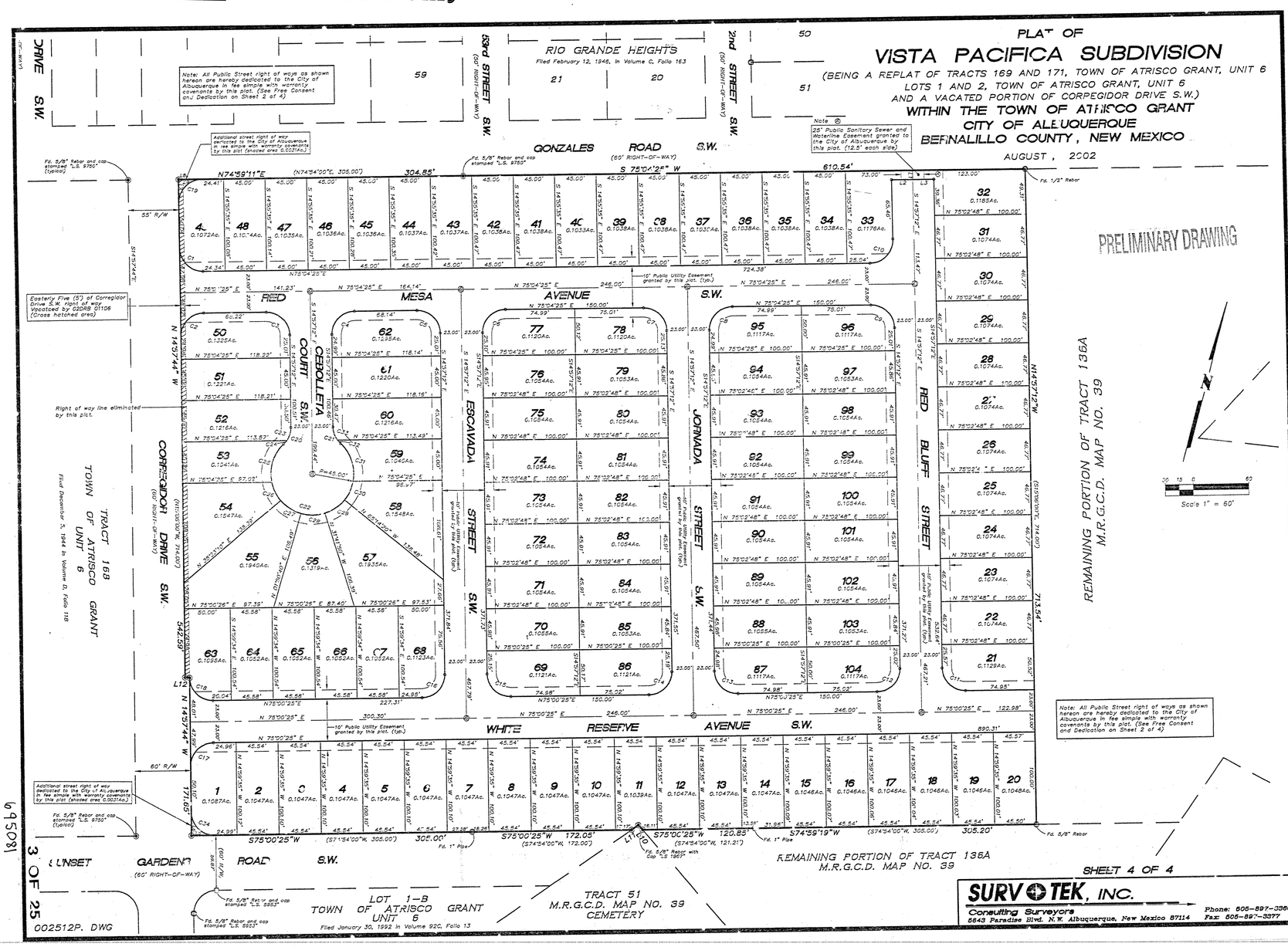

SHEET 4 OF 4

SURVOTEK, INC.
Consulting Surveyors
5643 Paradise Blvd. N.W. Albuquerque, New Mexico 87114
Phone: 505-897-3366
Fax: 505-897-3377

002512P.DWG

GENERAL NOTES:

1. THE SUBJECT PROPERTY IS LOCATED NEAR A FORMER LANDFILL. DUE TO THE SUBJECT PROPERTY BEING NEAR, A FORMER LANDFILL, CERTAIN PRECAUTIONARY MEASURES MAY NEED TO BE TAKEN TO ENSURE THE HEALTH AND SAFETY OF THE PUBLIC. RECOMMENDATIONS MADE BY A PROFESSIONAL ENGINEER WITH EXPERTISE IN LANDFILLS AND LANDFILL GAS ISSUES (AS REQUIRED BY THE MOST CURRENT VERSION OF THE "INTERIM GUIDELINES FOR DEVELOPMENT WITHIN 1000 FEET OF LANDFILLS") SHALL BE CONSULTED PRIOR TO DEVELOPMENT OF THE SITE.

2. DURING CONSTRUCTION, ALL PRECAUTION SHALL BE TAKEN TO AVOID RISK TO WORKERS. PERSONEL ARE TO BE MONITORED OR AVOID ENTRY INTO THE TRENCH AREA.

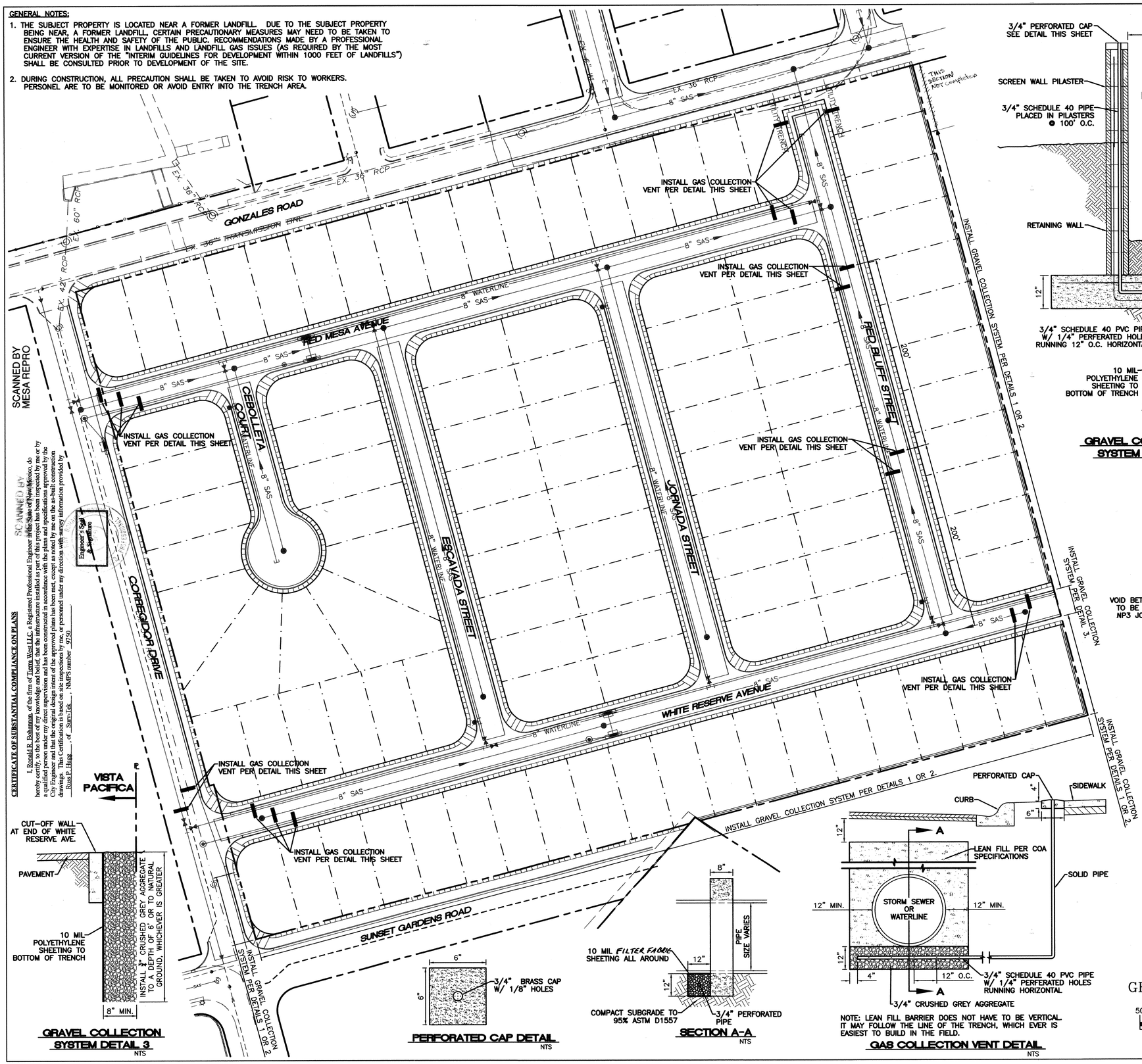

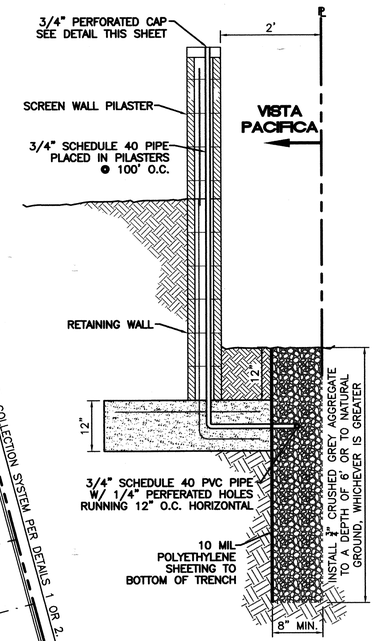

GRAVEL COLLECTION SYSTEM DETAIL 1
NTS

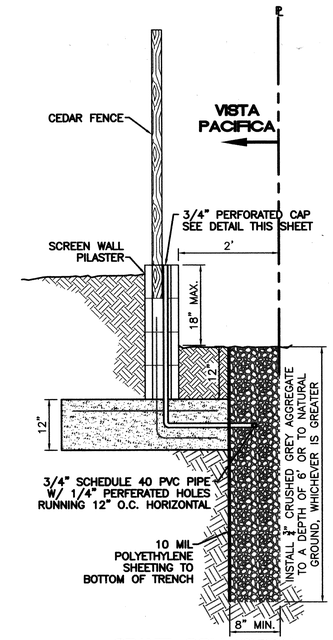

GRAVEL COLLECTION SYSTEM DETAIL 2
NTS

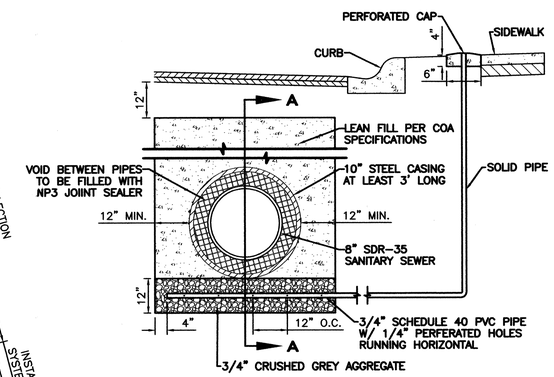

NOTE: LEAN FILL BARRIER DOES NOT HAVE TO BE VERTICAL. IT MAY FOLLOW THE LINE OF THE TRENCH, WHICH EVER IS EASIEST TO BUILD IN THE FIELD.

GAS COLLECTION VENT DETAIL FOR SANITARY SEWER
NTS

GRAVEL COLLECTION SYSTEM DETAIL 3
NTS

PERFORATED CAP DETAIL
NTS

SECTION A-A
NTS

NOTE: LEAN FILL BARRIER DOES NOT HAVE TO BE VERTICAL. IT MAY FOLLOW THE LINE OF THE TRENCH, WHICH EVER IS EASIEST TO BUILD IN THE FIELD.

GAS COLLECTION VENT DETAIL
NTS

GRAPHIC SCALE

50 25 0 25 50

SCALE: 1"=50'

CERTIFICATE OF SUBSTANTIAL COMPLIANCE ON PLANS

I, Ronald R. Bohannan, of the firm of Tierra West, LLC, a Registered Professional Engineer in the State of New Mexico, do hereby certify, to the best of my knowledge and belief, that the infrastructure installed as part of this project has been inspected by me or by a qualified person under my direct supervision and has been constructed in accordance with the plans and specifications approved by the City of Albuquerque and that the as-built information shown on these plans is correct as shown on the construction drawings. This Certification is based on site inspections by me, or personnel under my direction with survey information provided by Surv-Tek, NMPS number 9750.

Ross P. Hagg, of Surv-Tek, NMPS number 9750.

Engineer's Seal & Signature

SCANNED BY

AS BUILT INFORMATION	
CONTRACTOR	CCM, INC. 2003
WORK STAKED BY	SURV-TEK DATE 20023
INSPECTOR'S ACCEPTANCE BY	CDA/TW DATE 20023
FIELD VERIFICATION BY	CDA/TW DATE 2002/03
DRAWINGS CORRECTED BY	TIERRA WEST DATE 2003
MICRO-FILM INFORMATION	
RECORDED BY	DATE
NO.	
G-G=0.9996815	
Da=-00°15'32"	
EL.=5002.981 (SLD 1929)	

City Inspector A Astpad

BENCH MARKS
ACS MONUMENT "NM45-4A"
CENTRAL STATION DATA -
NM STATE PLANE COORDINATES
Central Zone (NAD 1927)
X=365,159.45
Y=1,480,226.55

SURVEY INFORMATION		
FIELD NOTES		
NO.	BY	DATE

ENGINEER'S SEAL

REVISIONS		
NO.	BY	REMARKS

DESIGN		
DESIGNED BY	JDN	DATE 11-02
DRAWN BY	JDN	DATE 11-21-02
DRAWN NAME:	21117GAS.DWG	21117
CHECKED BY	RRB	DATE 11-02

TIERRA WEST, LLC
8509 JEFFERSON NE
ALBUQUERQUE, NEW MEXICO 87113
(505)858-3100

CITY OF ALBUQUERQUE
PUBLIC WORKS DEPARTMENT
ENGINEERING GROUP

TITLE: **VISTA PACIFICA SUBDIVISION**

GAS TREATMENT PLAN

DESIGN REVIEW COMMITTEE	CITY ENGINEER APPROVAL	LAST DESIGN UPDATE	MO./DAY/YR.	MO./DAY/YR.
For Information Only				

CITY PROJECT NO.	ZONE MAP NO.	SHEET	OF
695081	K-11-Z	4	27

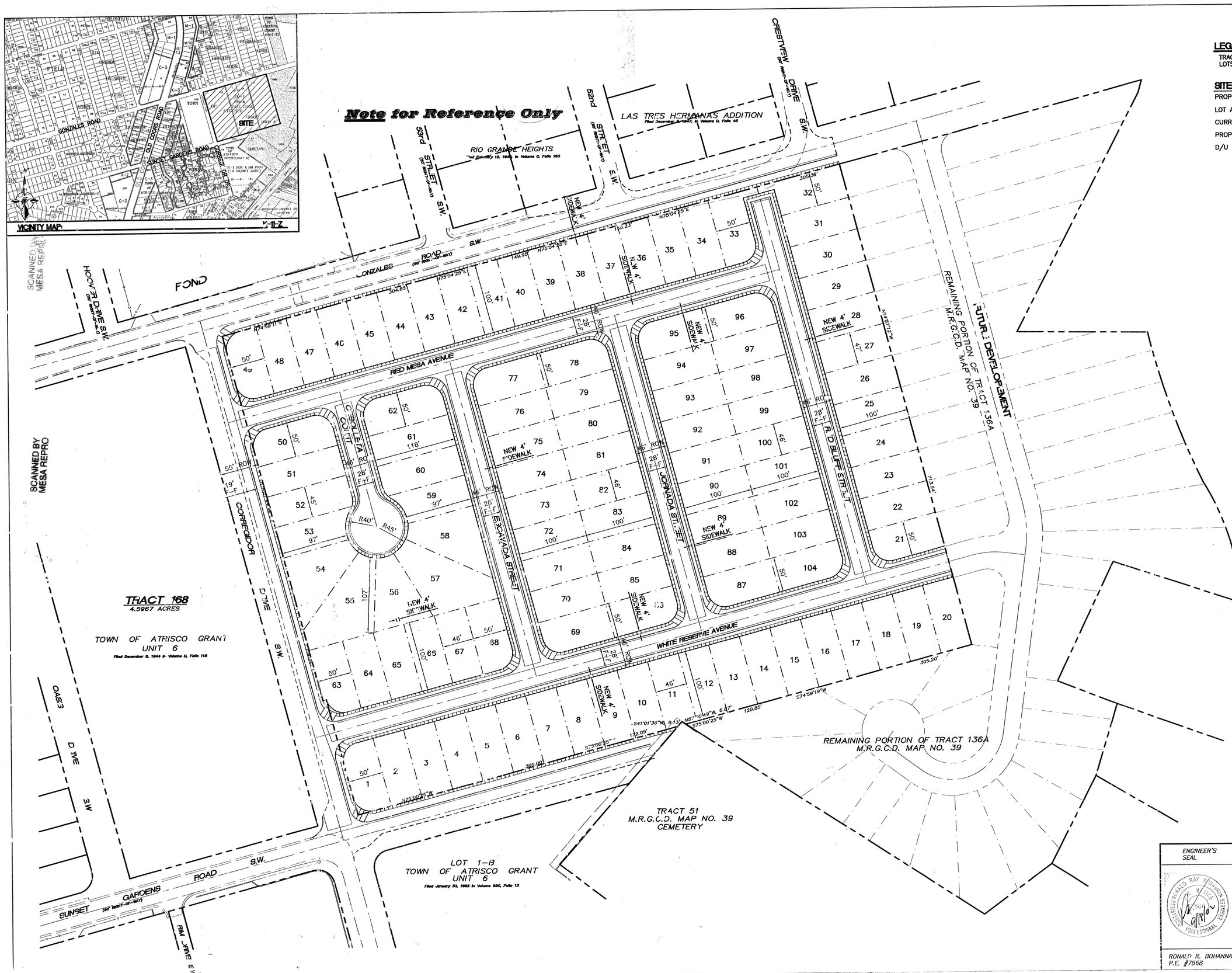

LEGAL DESCRIPTION:

TRACTS 169, AND 171, UNIT 6, TOWN OF ATRISCO GRANT AND LOTS 1 AND 2, TRACT 170, UNIT 6, TOWN OF ATRISCO GRANT

SITE DATA

PROPOSED USAGE:	SINGLE FAMILY RESIDENTIAL
LOT AREA:	653,281 SF (14.9973 ACRES)
CURRENT ZONING:	SU-1 PRD & FRAT LODGE
PROPOSED ZONING:	R-LT
D/U PER ACRE:	6.93 TO 7.47

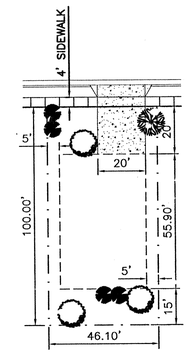

TYPICAL LOT LAYOUT
NTS

LEGEND

- EXISTING CURB & GUTTER
- PROPOSED CURB & GUTTER
- BOUNDARY LINE
- EXISTING BOUNDARY LINE
- EASEMENT
- PROPOSED SIDEWALK
- EXISTING SIDEWALK
- PROPOSED PERIMETER WALL
- CENTERLINE
- RIGHT-OF-WAY
- LOT LINES
- SETBACK LINE

GRAPHIC SCALE

60 30 0 30 60

SCALE: 1"=60'

ENGINEER'S SEAL	VISTA PACIFICA SUBDIVISION	DRAWN by JDN
		DATE 06-19-02
	SITE PLAN	21117SKET3.DWG
	TIERRA WEST, LLC 8509 JEFFERSON NE ALBUQUERQUE, NEW MEXICO 87113 (505)858-3100	SHEET # 5 OF 25
RONALD R. BOHANNAN P.E. #7868		JOB # 21117

695081

EROSION CONTROL NOTES:

1. CONTRACTOR IS RESPONSIBLE FOR OBTAINING A TOPSOIL DISTURBANCE PERMIT PRIOR TO BEGINNING WORK.

2. CONTRACTOR IS RESPONSIBLE FOR MAINTAINING RUN-OFF ON SITE DURING CONSTRUCTION.

3. CONTRACTOR IS RESPONSIBLE FOR CLEANING ALL SEDIMENT THAT GETS INTO EXISTING RIGHT-OF-WAY.

4. REPAIR OF DAMAGED FACILITIES AND CLEANUP OF SEDIMENT ACCUMULATIONS ON ADJACENT PROPERTIES AND IN PUBLIC FACILITIES IS THE RESPONSIBILITY OF THE CONTRACTOR.

5. ALL EXPOSED EARTH SURFACES MUST BE PROTECTED FROM WIND AND WATER EROSION PRIOR TO FINAL (CITY) ACCEPTANCE OF ANY PROJECT.

Site Volume Table: Adjusted

Site	Stratum	Surf1	Surf2	Cut yards	Fill yards	Net yards	Method
GR2							
	gr2surf	exgrd	GR2SURF	22781	12476	10305 (C)	Grid

CAUTION:
EXISTING UTILITIES ARE NOT SHOWN.
IT SHALL BE THE SOLE RESPONSIBILITY OF THE CONTRACTOR TO CONDUCT ALL NECESSARY FIELD INVESTIGATIONS PRIOR TO ANY EXCAVATION TO DETERMINE THE ACTUAL LOCATION OF UTILITIES & OTHER IMPROVEMENTS.

Note for Reference Only

PEDESTRIAN ACCESS DETAILS
SCALE: 1"=20'

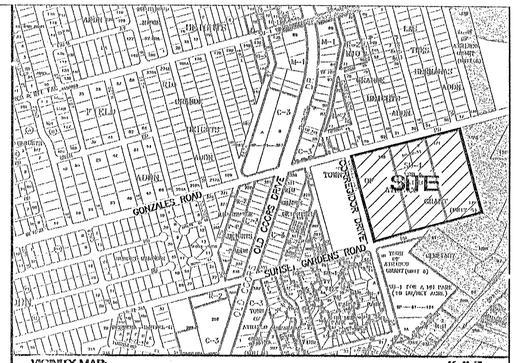

VICINITY MAP: K-11-Z

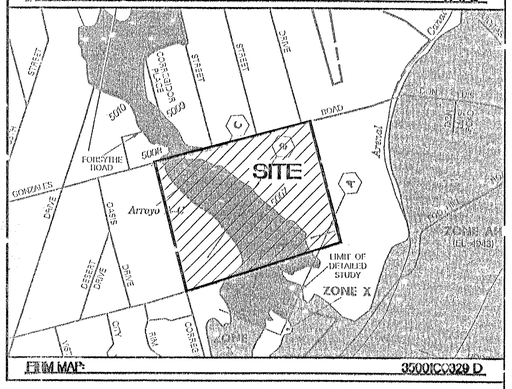

FIRM MAP: 35001C0329 D

NOTES:

1. ALL SPOT ELEVATIONS REPRESENT FLOWLINE ELEVATION UNLESS OTHERWISE NOTED.

LEGEND

	EXISTING STORM SEWER MANHOLE
	EXISTING STORM SEWER INLET
EX. 24" RCP	EXISTING STORM SEWER LINE
	PROPOSED STORM SEWER MANHOLE
	PROPOSED SNGL. "A" INLET
24" RCP	PROPOSED STORM SEWER LINE
X X X X X X	EXISTING FENCE
	EXISTING CURB & GUTTER
	PROPOSED CURB & GUTTER
	BOUNDARY LINE
	PROPOSED SIDEWALK
	PROPOSED RETAINING WALL
	PROPOSED 18" GARDEN WALL
5011	EXISTING CONTOUR
5010	EXISTING INDEX CONTOUR
	FLOW ARROW
	SLOPE TIE
× 5048.25	EXISTING SPOT ELEVATION
× 5048.25	PROPOSED SPOT ELEVATION
	CENTERLINE
	RIGHT-OF-WAY
	LOT LINES
	SETBACK LINE
	BENCH MARK

GRAPHIC SCALE
50 25 0 25 50
SCALE: 1"=50'

ROUGH GRADING APPROVAL DATE

ENGINEER'S SEAL
RONALD R. BOHANNAN P.E. #7868

VISTA PACIFICA SUBDIVISION

GRADING AND DRAINAGE PLAN

TIERRA WEST, LLC
8509 JEFFERSON NE
ALBUQUERQUE, NEW MEXICO 87113
(505)858-3100

DRAWN BY	JDN
DATE	10-18-02
	21117GR3.DWG
SHEET #	6 OF 25
JOB #	21117

695081

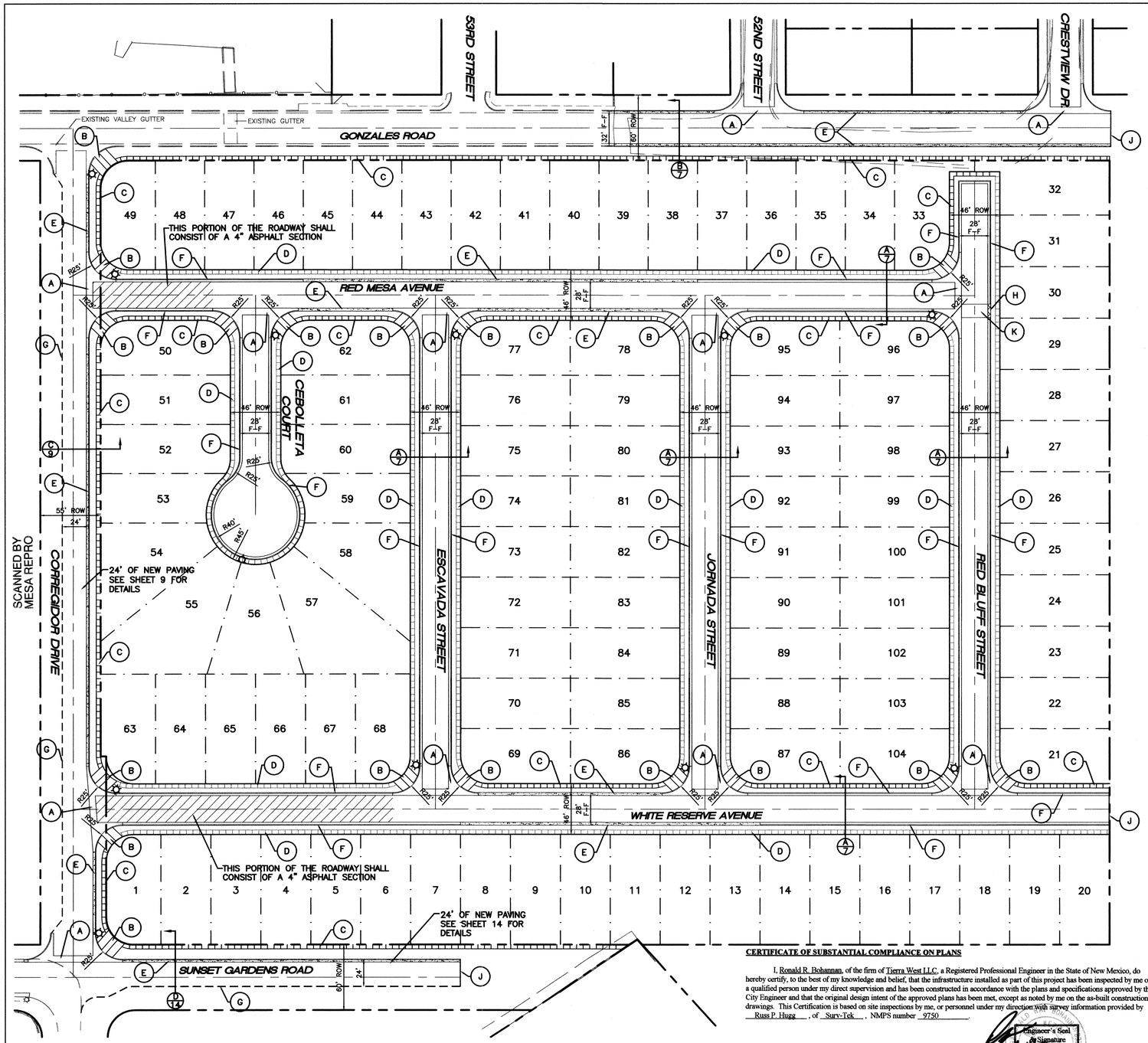

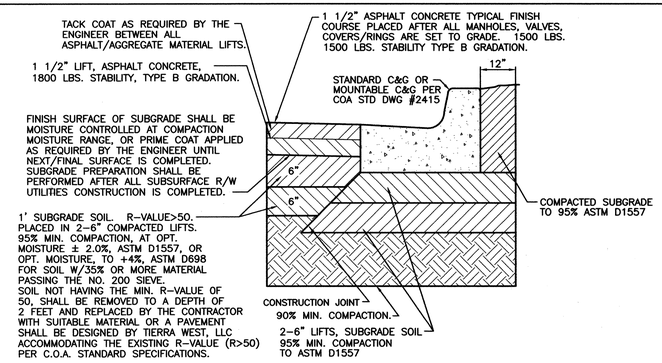

SECTION "A" TYPICAL RESIDENTIAL PAVING SECTION
NTS
PER COA STD DWG #2405

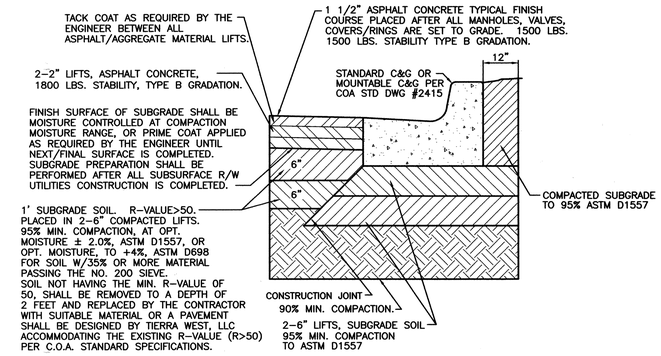

PAVING SECTION PER VINYARD AND ASSOCIATES PROJECT #02-1-027

GONZALES RD. AND CORREGIDOR DR. PAVING SECTIONS
NTS

LEGEND

- EXISTING CURB & GUTTER
- PROPOSED CURB & GUTTER
- BOUNDARY LINE
- PROPOSED SIDEWALK
- EXISTING SIDEWALK
- PROPOSED PERIMETER WALL
- CENTERLINE
- RIGHT-OF-WAY
- LOT LINES
- PROPOSED STREET LIGHTS

KEYED NOTE:

- (A) 6' VALLEY GUTTER PER C.O.A. STD DWG #2420
- (B) CASE II WHEELCHAIR RAMP PER C.O.A. STD DWG #2441
- (C) 4' SIDEWALK TO BE BUILT WITH THIS CONTRACT PER C.O.A. STD DWG #2430
- (D) 4' SIDEWALK (DEFERRED)
- (E) STANDARD CURB & GUTTER PER C.O.A. STD DWG #2415
- (F) MOUNTABLE CURB & GUTTER PER C.O.A. STD DWG #2415
- (G) EXTRUDED ASPHALT CURB PER C.O.A. STD DWG #2415
- (H) DEPRESSED CURB & GUTTER PER C.O.A. STD DWG #2415
- (J) CUT-OFF WALL PER C.O.A. STD DWG #2415
- (K) 12' GUTTER PER C.O.A. STD DWG #2422

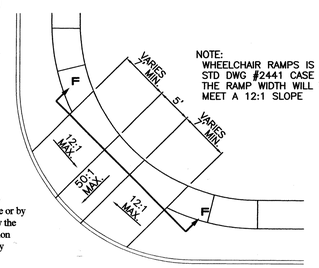

NOTE:
WHEELCHAIR RAMPS IS AS C.O.A. STD DWG #2441 CASE II, EXCEPT THE RAMP WIDTH WILL VARY TO MEET A 12:1 SLOPE

WHEELCHAIR RAMP DETAIL (TYP.)
NTS

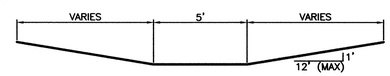

SECTION F-F
NTS

CERTIFICATE OF SUBSTANTIAL COMPLIANCE ON PLANS

I, Ronald R. Bohannan, of the firm of Tierra West LLC, a Registered Professional Engineer in the State of New Mexico, do hereby certify, to the best of my knowledge and belief, that the infrastructure installed as part of this project has been inspected by me or by a qualified person under my direct supervision and has been constructed in accordance with the plans and specifications approved by the City Engineer and that the original design intent of the approved plans has been met, except as noted by me on the as-built construction drawings. This Certification is based on site inspections by me, or personnel under my direction with survey information provided by Russ P. Hugg, of Surv-Tek, NMPS number 9750.

Engineer's Seal & Signature

8/21/03

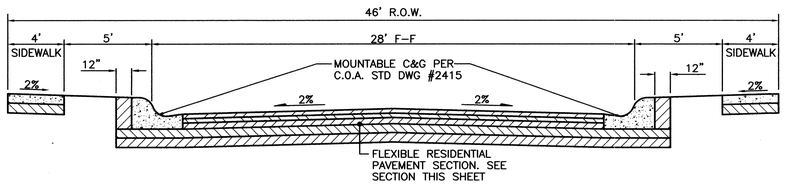

SECTION A-A
TYPICAL 28' STREET SECTION W/ MOUNTABLE CURB AND GUTTER
NTS

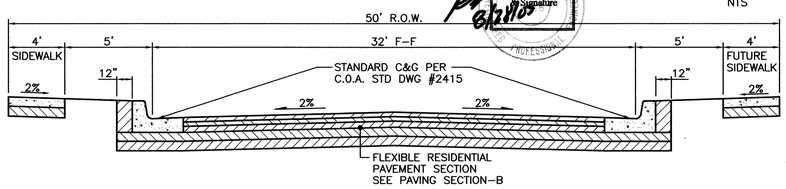

SECTION B-B
TYPICAL 32' STREET SECTION
NTS

GRAPHIC SCALE
50 25 0 25 50
SCALE: 1"=50'

SCANNED BY MESA REPRO

AS BUILT INFORMATION	
CONTRACTOR	CSM, INC. 2003
WORK BY	SURV-TEK DATE 20023
INSPECTOR'S ACCEPTANCE BY	COA/TW DATE 20023
VERIFICATION BY	COA/TW DATE 2002/03
CORRECTED BY	TIERRA WEST DATE 2003
MICRO-FILM INFORMATION	
RECORDED BY	DATE
NO.	

C.L. Inspector A. Aspaas

BENCH MARKS

ACS MONUMENT "NM45-4A"	
CENTRAL STATION DATA -	
NM STATE PLANE COORDINATES	
Central Zone (NAD 1927)	
X=365,159.45	
Y=1,480,226.55	
G-G=0.9996815	
Dg=-00°15'32"	
EL.=5002.981 (SLD 1929)	

SURVEY INFORMATION

FIELD NOTES

NO.	BY	DATE

ENGINEER'S SEAL

RONALD RAY BOHANNAN NEW MEXICO 9750 PROFESSIONAL ENGINEER

NO.	DATE	REMARKS	BY
		REVISIONS	

DESIGN

DESIGNED BY	JDN	DATE 08-02
DRAWN BY	JDN	DATE 10/08/02
DRAWN NAME:	21117MP.DWG	
CHECKED BY	RRB	DATE 08-02

TIERRA WEST, LLC
8509 JEFFERSON NE
ALBUQUERQUE, NEW MEXICO 87113
(505)858-3100

CITY OF ALBUQUERQUE
PUBLIC WORKS DEPARTMENT
ENGINEERING GROUP

TITLE:
VISTA PACIFICA SUBDIVISION
MASTER PAVING PLAN

DESIGN REVIEW COMMITTEE	CITY ENGINEER APPROVAL	LAST DESIGN UPDATE	MO./DAY/YR.	MO./DAY/YR.
APPROVED JAN - 8 '03 DESIGN REVIEW COMMITTEE	APPROVED JAN 10 2003 CITY ENGINEER			

CITY PROJECT NO.	ZONE MAP NO.	SHEET	OF
695081	K-11-Z	7	25

CURVE TABLE						
CURVE	LENGTH	RADIUS	TANGENT	DELTA	CHORD BEARING	CHORD LENGTH
C1	39.35	25.00	25.08	90°10'25"	N29°59'12"E	35.41
C2	39.19	25.00	24.92	89°49'35"	S60°00'48"E	35.30
C3	39.35	25.00	25.08	90°10'25"	N29°59'12"E	35.41
C4	39.19	25.00	24.92	89°49'35"	S60°00'48"E	35.30

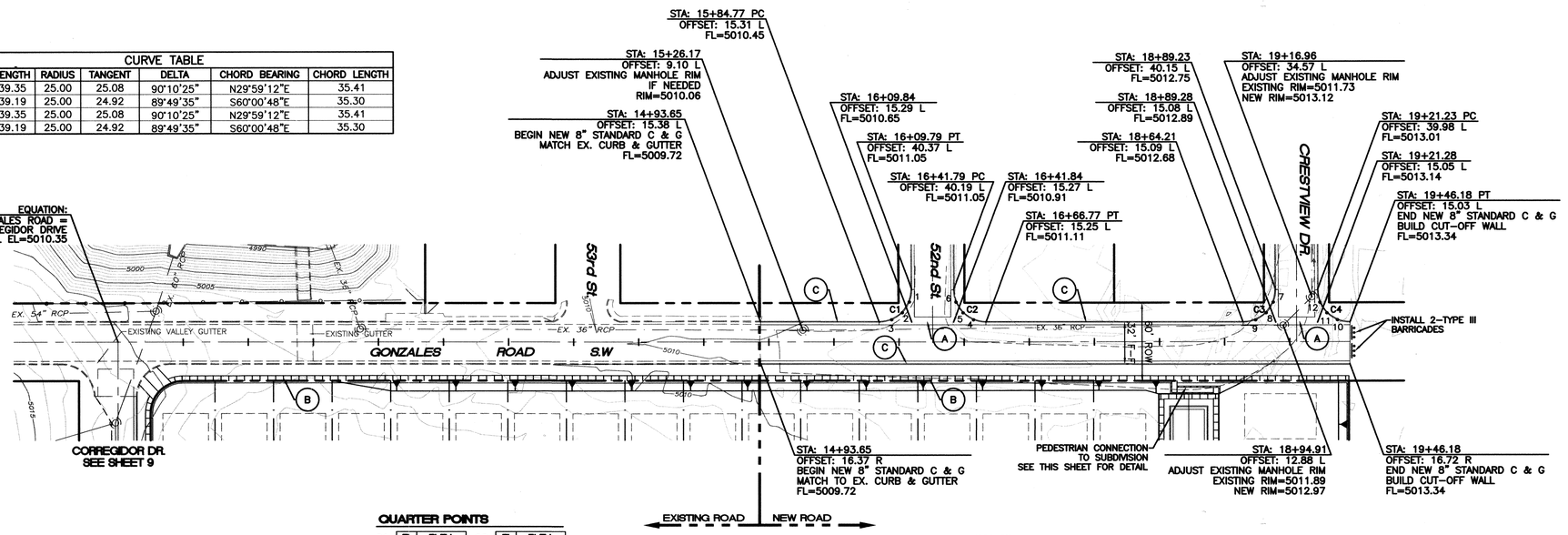

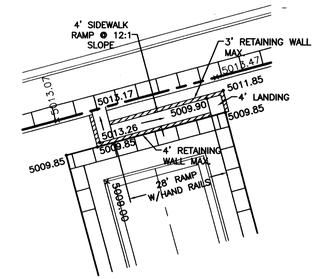

PEDESTRIAN ACCESS DETAILS.
SCALE: 1"=20'

SCANNED BY MESA REPRO

KEYED NOTE:

(A) 6' VALLEY GUTTER PER C.O.A. STD DWG #2420

(B) 4' SIDEWALK TO BE BUILT WITH THIS CONTRACT PER C.O.A. STD DWG #2430

(C) STANDARD CURB & GUTTER PER C.O.A. STD DWG #2415

QUARTER POINTS

C1	FL	ELEV.	C2	FL	ELEV.
	1	5010.90		4	5011.10
	2	5010.75		5	5011.08
	3	5010.60		6	5011.07

C3	FL	ELEV.	C4	FL	ELEV.
	7	5012.73		10	5013.26
	8	5012.72		11	5013.18
	9	5012.70		12	5013.09

CERTIFICATE OF SUBSTANTIAL COMPLIANCE ON PLANS

I, Ronald R. Bohannan, of the firm of Tierra West LLC, a Registered Professional Engineer in the State of New Mexico, do hereby certify, to the best of my knowledge and belief, that the infrastructure installed as part of this project has been inspected by me or by a qualified person under my direct supervision and has been constructed in accordance with the plans and specifications approved by the City Engineer and that the original design intent of the approved plans has been met, except as noted by me on the as-built construction drawings. This Certification is based on site inspections by me, or personnel under my direction with survey information provided by Russ P. Hugg, of Surv-Tek, NMPS number 9750.

Engineer's Seal & Signature

8/21/03

NOTE:

1. SEE MASTER PAVING PLAN FOR STREET SECTIONS AND WHEELCHAIR RAMP TYPES.
2. ALL CURB AND GUTTER IS TO BE 8" STANDARD UNLESS OTHERWISE NOTED.
3. ALL EXISTING MANHOLES AND VALVE BOXES ARE TO BE ADJUSTED TO NEW GRADES AS NECESSARY.
4. FUTURE HC RAMPS ON THE NORTH SIDE OF GONZALES ROAD ARE TO BE BUILT BY THE FUTURE DEVELOPMENT.

SCALE: HORIZ. 1"=50'
VERT. 1"=5'

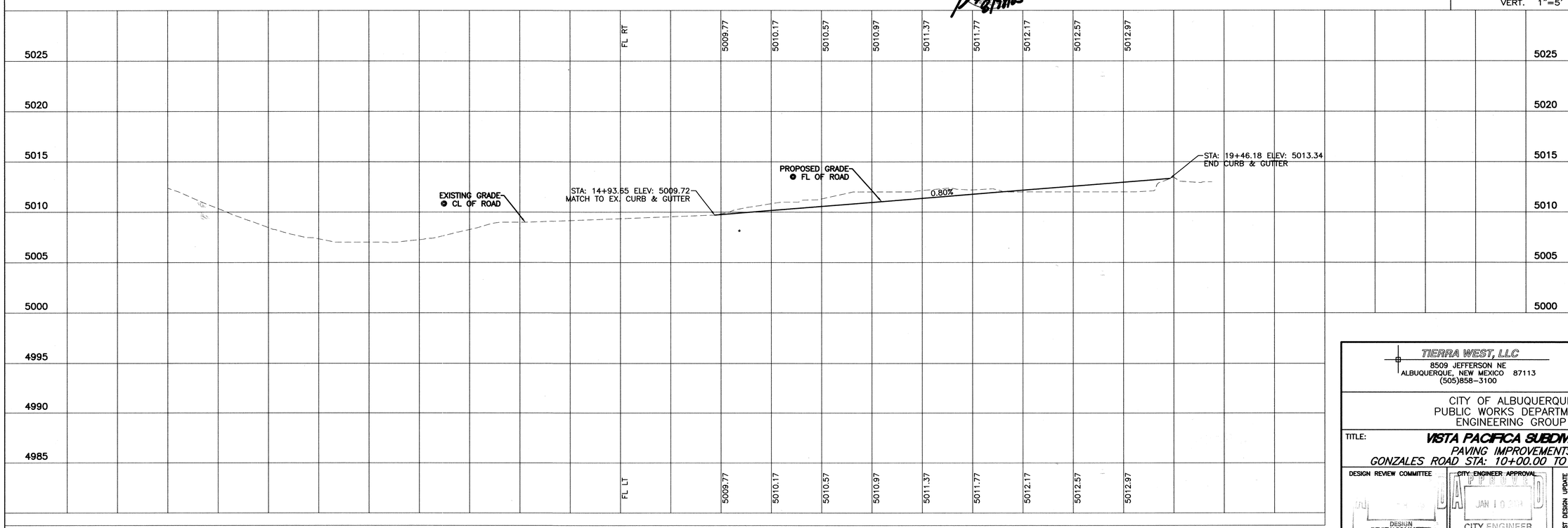

AS BUILT INFORMATION

CONTRACTOR	CGM, INC.	2003
WORK BY	SURV-TEK	DATE 20023
INSPECTORS ACCEPTANCE BY	COA/TW	DATE 20023
FIELD VERIFICATION BY	COA/TW	DATE 2002/03
DRAWINGS CORRECTED BY	TIERRA WEST	DATE 2003

MICRO-FILM INFORMATION

RECORDED BY	DATE
NO.	

Kit Inspector A. Aspeck

BENCH MARKS

ACS MONUMENT "NM45-4A"
CENTRAL STATION DATA SOUTH OF BRIDGE BETWEEN SOUTH COORS AND UNIVERSITY BLVD.
NM STATE PLANE COORDINATES
Central Zone (NAD 1927)
X=365,169.46
Y=1,480,226.55
G-G=0.9996815
Dg=-00°15'32"
EL=5002.981 (SLD 1929)

SURVEY INFORMATION

FIELD NOTES

NO.	BY	DATE

ENGINEER'S SEAL

RONALD R. BOHANNAN
NEW MEXICO
9750
PROFESSIONAL ENGINEER
10/30/02

NO.	DATE	REMARKS	BY

REVISIONS

DESIGN

DESIGNED BY	JDN	DATE 08-02
DRAWN BY	JDN	DATE 10/08/02
DRAWN NAME:	GONZPP.DWG	21117
CHECKED BY	RRB	DATE 08-02

TIERRA WEST, LLC
8509 JEFFERSON NE
ALBUQUERQUE, NEW MEXICO 87113
(505)858-3100

CITY OF ALBUQUERQUE
PUBLIC WORKS DEPARTMENT
ENGINEERING GROUP

TITLE: **VISTA PACIFICA SUBDIVISION**
PAVING IMPROVEMENTS
GONZALES ROAD STA: 10+00.00 TO STA: 19+46.18

DESIGN REVIEW COMMITTEE — DESIGN REVIEW COMMITTEE

CITY ENGINEER APPROVAL — APPROVED JAN 10 2003 — CITY ENGINEER

LAST DESIGN UPDATE | MO./DAY/YR. | MO./DAY/YR.

CITY PROJECT NO. 695081 | ZONE MAP NO. K-11-Z | SHEET 8 OF 25

QUARTER POINTS

C1 FL	ELEV.	C2 FL	ELEV.	C3 FL	ELEV.
1	5009.48	4	5008.65	7	5012.40
2	5009.56	5	5008.91	8	5012.09
3	5009.64	6	5009.15	9	5011.79

C4 FL	ELEV.	C5 FL	ELEV.	C6 FL	ELEV.
10	5012.31	13	5011.80	16	5012.35
11	5012.44	14	5011.91	17	5012.31
12	5012.57	15	5012.02	18	5012.27

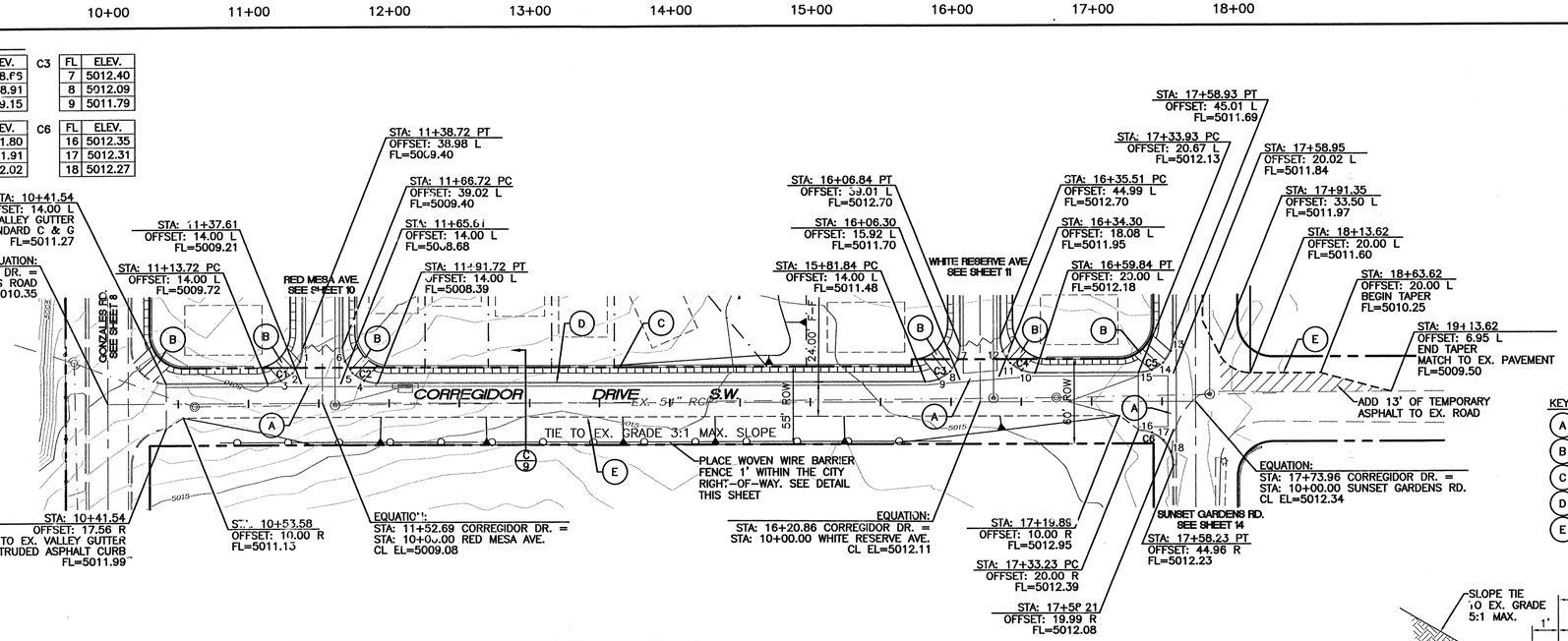

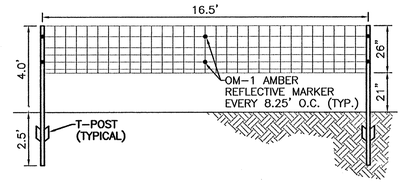

1" OVEN WIRE BARRIER FENCE DETAIL
NTS

KEYED NOTE:

- (A) 6' VALLEY GUTTER PER C.O.A. STD DWG #2420
- (B) CASE II WHEELCHAIR RAMP PER C.O.A. STD DWG #2441
- (C) 4' SIDEWALK TO BE BUILT WITH THIS CONTRACT PER C.O.A. STD DWG #2430
- (D) STANDARD CURB & GUTTER PER C.O.A. STD DWG #2415
- (E) EXTRUDED ASPHALT CURB PER C.O.A. STD DWG #2415

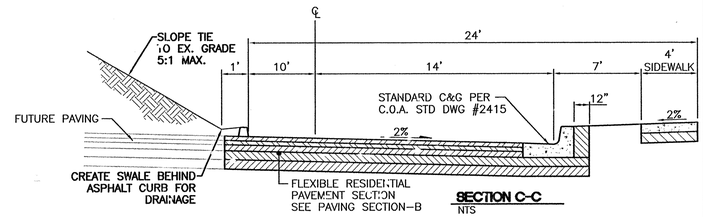

SECTION C-C
NTS

NOTE:

1. SEE MASTER PAVING PLAN FOR STREET SECTIONS AND WHEELCHAIR RAMP TYPES.
2. ALL CURB AND GUTTER IS TO BE 8" STANDARD UNLESS OTHERWISE NOTED.
3. CROWN TRANSITIONS TO BE BUILT PER COA STD DWG #2401
4. ALL EXISTING MANHOLES AND VALVE BOXES ARE TO BE ADJUSTED TO NEW GRADES AS NECESSARY.

CURVE TABLE						
CURVE	LENGTH	RADIUS	TANGENT	DELTA	CHORD BEARING	CHORD LENGTH
C1	39.25	25.00	24.98	89°57'51"	S59°56'39"E	35.34
C2	39.29	25.00	25.02	90°02'09"	S30°03'21"W	35.37
C3	39.28	25.00	25.01	90°01'51"	S59°58'39"E	35.36
C4	39.26	25.00	24.99	89°58'09"	S30°01'21"W	35.35
C5	39.28	25.00	25.01	90°01'51"	S59°58'39"E	35.36
C6	39.28	25.00	25.01	90°01'51"	N30°03'12"E	35.36

SCALE: HORIZ. 1"=50'
VERT. 1"=5'

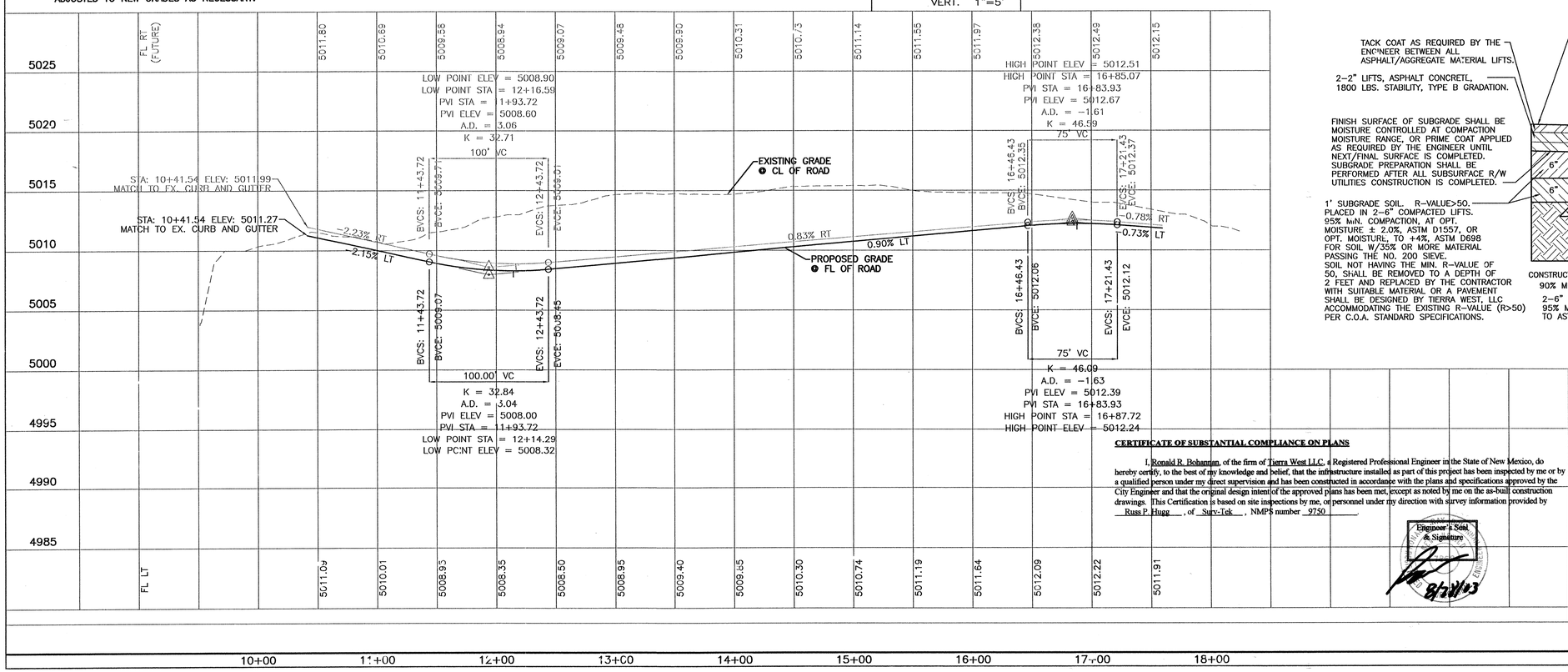

CERTIFICATE OF SUBSTANTIAL COMPLIANCE ON PLANS

I, Ronald R. Bohannan, of the firm of Tierra West LLC, a Registered Professional Engineer in the State of New Mexico, do hereby certify, to the best of my knowledge and belief, that the infrastructure installed as part of this project has been inspected by me or by a qualified person under my direct supervision and has been constructed in accordance with the plans and specifications approved by the City Engineer and that the original design intent of the approved plans has been met, except as noted by me on the as-built construction drawings. This Certification is based on site inspections by me, or personnel under my direction with survey information provided by Russ P. Hugg, of Surv-Tek, NMPS number 9750.

Engineer's Seal & Signature

8/27/03

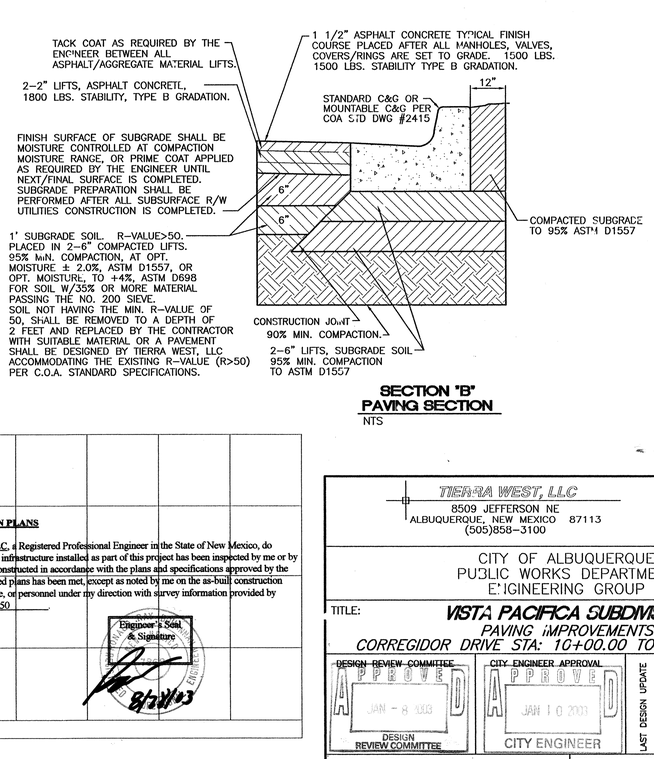

SECTION "B"
PAVING SECTION
NTS

AC BUILT INFORMATION
CONTRACTOR CSM, INC. 2003
WORK SURV-TEK DATE 20023
STAKED BY
INSPECTOR'S ACCEPTANCE BY CO/ATW DATE 20023
FIELD VERIFICATION BY CO/ATW DATE 2002/03
DRAWINGS CORRECTED BY TIERRA WEST DATE 2003
MICRO-FILM INFORMATION
RECORDED BY DATE
NO.

BENCH MARKS
ACS MONUMENT "NM45-44"
CENTRAL STATION DATA SOUTH OF BRIDGE BETWEEN SOUTH COORS AND TOWER RD.
NM STATE PLANE COORDINATES
Central Zone (NAD 1927)
X=365,169.46
Y=1,480,226.55
G-G: 0.9996815
Dg=-00°15'32"
EL=5002.981 (SLD 1929)

SURVEY INFORMATION
FIELD NOTES
NO. BY DATE

ENGINEER'S SEAL

REMARKS
REVISIONS
NO. BY DATE

DESIGN
DESIGNED BY JDN DATE 08-02
DRAWN BY JDN DATE 08-23-02
DRAWN NAME: CORRFP.DWG 21117
CHECKED BY RRB DATE 08-02

TIERRA WEST, LLC
8509 JEFFERSON NE
ALBUQUERQUE, NEW MEXICO 87113
(505)858-3100

CITY OF ALBUQUERQUE
PUBLIC WORKS DEPARTMENT
ENGINEERING GROUP

TITLE: **VISTA PACIFICA SUBDIVISION**
PAVING IMPROVEMENTS
CORREGIDOR DRIVE STA: 10+00.00 TO STA: 17+73.96

DESIGN REVIEW COMMITTEE: APPROVED JAN - 8 2003 DESIGN REVIEW COMMITTEE
CITY ENGINEER APPROVAL: APPROVED JAN 10 2003 CITY ENGINEER
LAST DESIGN UPDATE MO./DAY/YR. MO./DAY/YR.

CITY PROJECT NO. 695081
ZONE MAP NO. K-11-Z
SHEET 9 OF 25

SCANNED BY MESA REPRO

KEYED NOTE:

- (A) 6' VALLEY GUTTER PER C.O.A. STD DWG #2420
- (B) TYPE II WHEELCHAIR RAMP PER C.O.A. STD DWG #2441
- (C) 4' SIDEWALK TO BE BUILT WITH THIS CONTRACT PER C.O.A. STD DWG #2430
- (D) 4' SIDEWALK (DEFERRED)
- (E) STANDARD CURB & GUTTER PER C.O.A. STD DWG #2415
- (F) MOUNTABLE CURB & GUTTER PER C.O.A. STD DWG #2415
- (G) 12' GUTTER PER C.O.A. STD DWG #2422

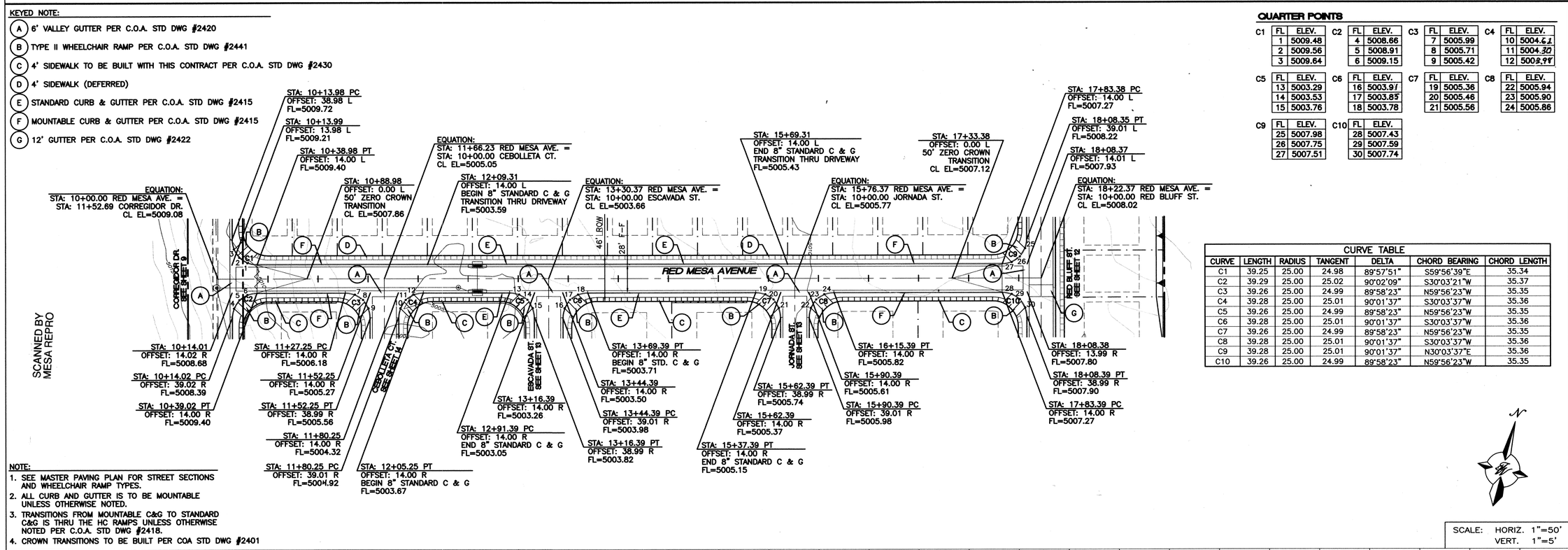

QUARTER POINTS

	FL	ELEV.
C1	1	5009.48
	2	5009.56
	3	5009.64
C2	4	5008.66
	5	5008.91
	6	5009.15
C3	7	5005.99
	8	5005.71
	9	5005.42
C4	10	5004.61
	11	5004.30
	12	5003.98
C5	13	5003.29
	14	5003.53
	15	5003.76
C6	16	5003.97
	17	5003.85
	18	5003.78
C7	19	5005.36
	20	5005.46
	21	5005.56
C8	22	5005.94
	23	5005.90
	24	5005.86
C9	25	5007.98
	26	5007.75
	27	5007.51
C10	28	5007.43
	29	5007.59
	30	5007.74

CURVE TABLE

CURVE	LENGTH	RADIUS	TANGENT	DELTA	CHORD BEARING	CHORD LENGTH
C1	39.25	25.00	24.98	89°57'51"	S59°56'39"E	35.34
C2	39.29	25.00	25.02	90°02'09"	S30°03'21"W	35.37
C3	39.26	25.00	24.99	89°58'23"	N59°56'23"W	35.35
C4	39.28	25.00	25.01	90°01'37"	S30°03'37"W	35.36
C5	39.26	25.00	24.99	89°58'23"	N59°56'23"W	35.35
C6	39.28	25.00	25.01	90°01'37"	S30°03'37"W	35.36
C7	39.26	25.00	24.99	89°58'23"	N59°56'23"W	35.35
C8	39.28	25.00	25.01	90°01'37"	S30°03'37"W	35.36
C9	39.28	25.00	25.01	90°01'37"	N30°03'37"E	35.36
C10	39.26	25.00	24.99	89°58'23"	N59°56'23"W	35.35

NOTE:

1. SEE MASTER PAVING PLAN FOR STREET SECTIONS AND WHEELCHAIR RAMP TYPES.
2. ALL CURB AND GUTTER IS TO BE MOUNTABLE UNLESS OTHERWISE NOTED.
3. TRANSITIONS FROM MOUNTABLE C&G TO STANDARD C&G IS THRU THE HC RAMPS UNLESS OTHERWISE NOTED PER C.O.A. STD DWG #2418.
4. CROWN TRANSITIONS TO BE BUILT PER COA STD DWG #2401

SCALE: HORIZ. 1"=50'
VERT. 1"=5'

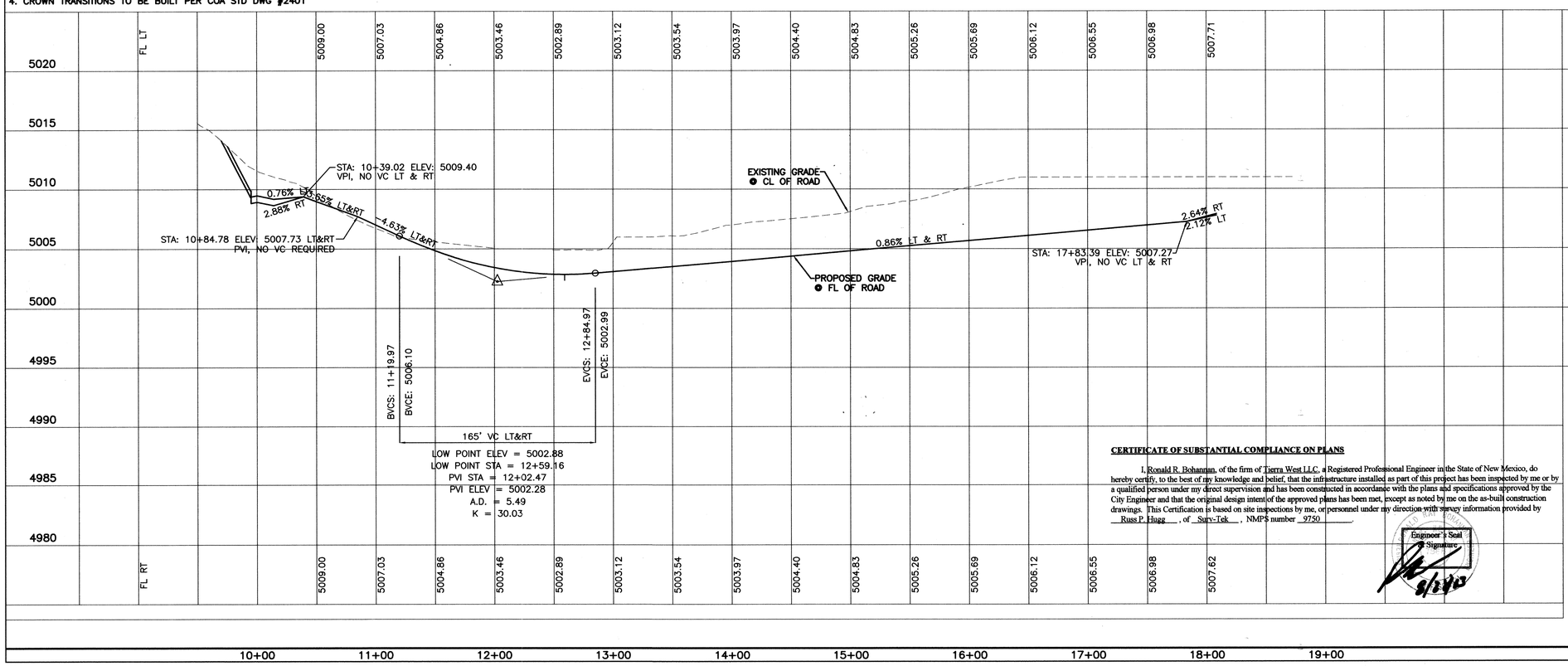

CERTIFICATE OF SUBSTANTIAL COMPLIANCE ON PLANS

I, Ronald R. Bohannan, of the firm of Tierra West LLC, a Registered Professional Engineer in the State of New Mexico, do hereby certify, to the best of my knowledge and belief, that the infrastructure installed as part of this project has been inspected by me or by a qualified person under my direct supervision and has been constructed in accordance with the plans and specifications approved by the City Engineer and that the original design intent of the approved plans has been met, except as noted by me on the as-built construction drawings. This Certification is based on site inspections by me, or personnel under my direction with survey information provided by Russ P. Hugg, of Surv-Tek, NMPS number 9750.

Engineer's Seal & Signature

5/3/03

AS BUILT INFORMATION

CONTRACTOR	CON, INC.	2003
WORK STAKED BY	SURV-TEK	DATE 20023
INSPECTOR'S CHANGE BY	CO/A/TW	DATE 20023
FIELD VERIFICATION BY	CO/A/TW	DATE 2002/03
DRAWINGS CORRECTED BY	TERRA WEST	DATE 2003

MICRO-FILM INFORMATION

RECORDED BY	DATE
NO.	

BENCH MARKS

ACS MONUMENT "NM45-4A"
CENTRAL STATION DATA SOUTH OF BRIDGE BETWEEN SOUTH COORS AND SOUTH 98.

NM STATE PLANE COORDINATES
Central Zone (NAD 1927)
X=365,169.46
Y=1,480,226.55
G-G=0.9996815
Da=-0°15'32"
EL=5002.981 (SLD 1929)

SURVEY INFORMATION

FIELD NOTES

NO.	BY	DATE

ENGINEER'S SEAL

DONALD RAY BOHANNAN NEW MEXICO 9750 PROFESSIONAL ENGINEER

REVISIONS

NO.	DATE	REMARKS	BY

DESIGN		
DESIGNED BY	JDN	DATE 08-02
DRAWN BY	JDN	DATE 10/08/02
DRAWN NAME:	REDMESAPP.DWG	21117
CHECKED BY	RRB	DATE 08-02

TIERRA WEST, LLC
8509 JEFFERSON NE
ALBUQUERQUE, NEW MEXICO 87113
(505)858-3100

CITY OF ALBUQUERQUE
PUBLIC WORKS DEPARTMENT
ENGINEERING GROUP

TITLE: **VISTA PACIFICA SUBDIVISION**
PAVING IMPROVEMENTS
RED MESA AVE. STA: 10+00.00 TO STA: 18+22.37

DESIGN REVIEW COMMITTEE: APPROVED JAN - 8 2003 DESIGN REVIEW COMMITTEE

CITY ENGINEER APPROVAL: APPROVED JAN 10 2003 CITY ENGINEER

LAST DESIGN UPDATE | MO./DAY/YR. | MO./DAY/YR.

CITY PROJECT NO. 695081 | ZONE MAP NO. K-11-Z | SHEET 10 OF 25

KEYED NOTE:

- (A) 6' VALLEY GUTTER PER C.O.A. STD DWG #2420
- (B) CASE II WHEELCHAIR RAMP PER C.O.A. STD DWG #2441
- (C) 4' SIDEWALK TO BE BUILT WITH THIS CONTRACT PER C.O.A. STD DWG #2430
- (D) STANDARD CURB & GUTTER PER C.O.A. STD DWG #2415
- (E) MOUNTABLE CURB & GUTTER PER C.O.A. STD DWG #2415
- (F) 4' SIDEWALK (DEFERRED)

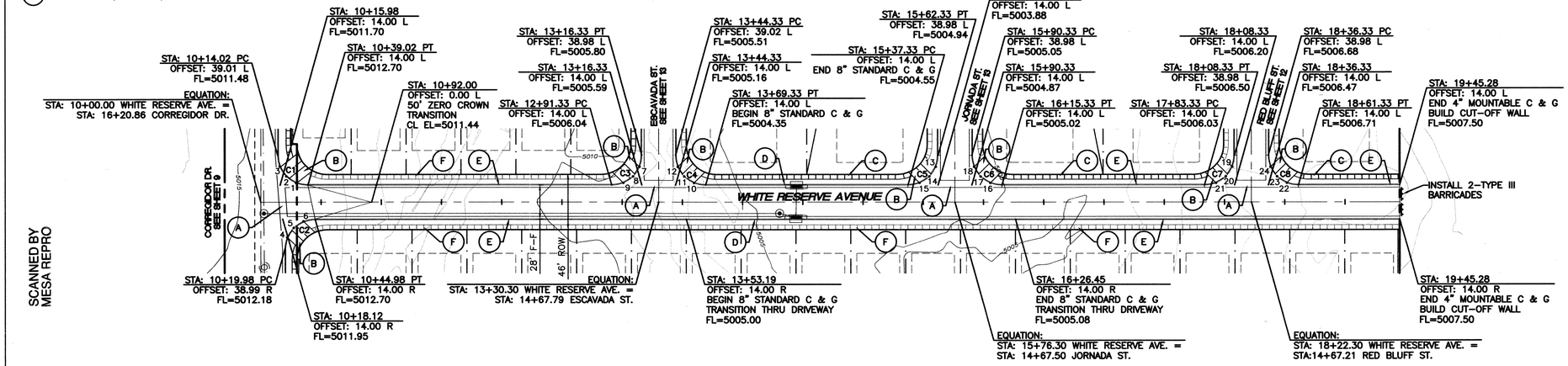

SCANNED BY
MESA REPRO

NOTE:

1. SEE MASTER PAVING PLAN FOR STREET SECTIONS AND WHEELCHAIR RAMP TYPES.
2. ALL CURB AND GUTTER ARE TO BE MOUNTABLE UNLESS OTHERWISE NOTED.
3. TRANSITIONS FROM MOUNTABLE C&G TO STANDARD C&G IS THRU THE HC RAMPS UNLESS OTHERWISE NOTED PER C.O.A. STD DWG #2418.
4. CROWN TRANSITION PER COA STD DWG #2401

QUARTER POINTS

	FL	ELEV.		FL	ELEV.		FL	ELEV.		FL	ELEV.
C1	1	5012.40	C2	4	5012.31	C3	7	5005.70	C4	10	5004.96
	2	5012.09		5	5012.44		8	5005.76		11	5005.26
	3	5011.79		6	5012.57		9	5005.82		12	5005.34
C5	13	5004.82	C6	16	5004.96	C7	19	5006.37	C8	22	5006.59
	14	5004.80		17	5004.96		20	5006.24		23	5006.58
	15	5004.67		18	5004.95		21	5006.10		24	5006.58

CURVE TABLE

CURVE	LENGTH	RADIUS	TANGENT	DELTA	CHORD BEARING	CHORD LENGTH
C1	39.28	25.00	25.01	90°01'51"	S59°58'39"E	35.36
C2	39.26	25.00	24.99	89°58'09"	S30°01'21"W	35.35
C3	39.25	25.00	24.98	89°57'37"	N30°01'37"E	35.34
C4	39.29	25.00	25.02	90°02'23"	S59°58'23"E	35.37
C5	39.25	25.00	24.98	89°57'37"	N30°01'37"E	35.34
C6	39.29	25.00	25.02	90°02'23"	S59°58'23"E	35.37
C7	39.25	25.00	24.98	89°57'37"	N30°01'37"E	35.34
C8	39.29	25.00	25.02	90°02'23"	S59°58'23"E	35.37

SCALE: HORIZ. 1"=50'
VERT. 1"=5'

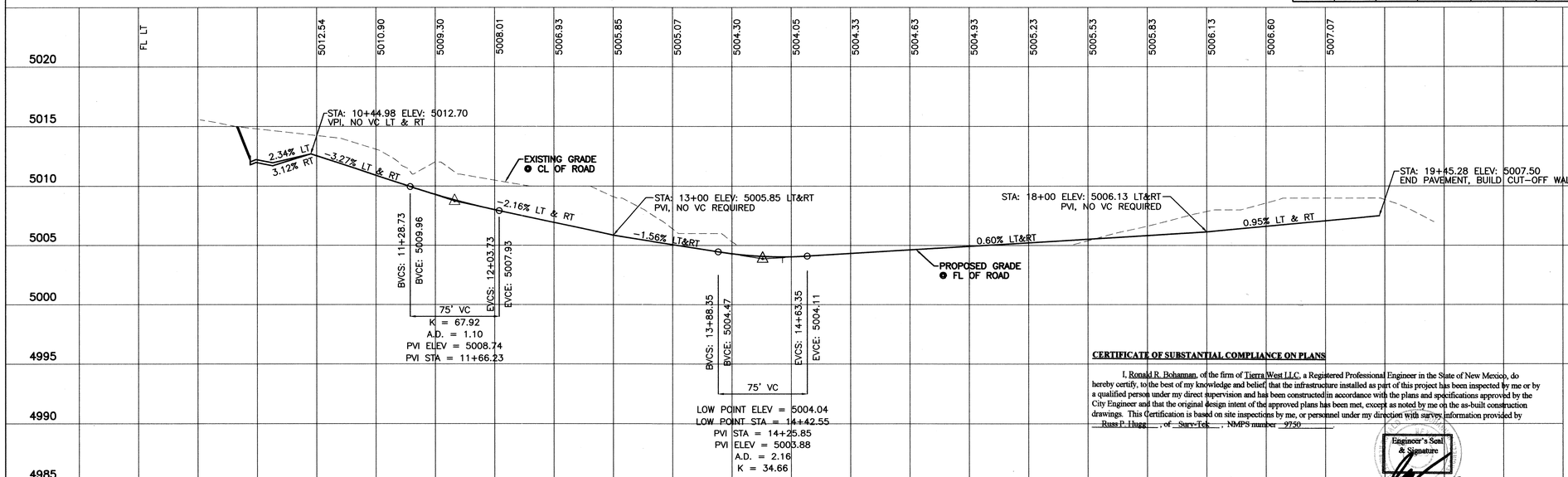

CERTIFICATE OF SUBSTANTIAL COMPLIANCE ON PLANS

I, Ronald R. Bohannan, of the firm of Tierra West LLC, a Registered Professional Engineer in the State of New Mexico, do hereby certify, to the best of my knowledge and belief, that the infrastructure installed as part of this project has been inspected by me or by a qualified person under my direct supervision and has been constructed in accordance with the plans and specifications approved by the City Engineer and that the original design intent of the approved plans has been met, except as noted by me on the as-built construction drawings. This Certification is based on site inspections by me, or personnel under my direction with survey information provided by Russ P. Hugg, of Surv-Tek, NMPS number 9750

Engineer's Seal & Signature

AS BUILT INFORMATION

CONTRACTOR	CGM, INC.	2003
SURVEY BY	SURV-TEK	DATE 20023
INSPECTOR'S ACCEPTANCE BY	CGM/TW	DATE 20023
VERIFICATION BY	CGM/TW	DATE 2002/03
CORRECTED BY	TIERRA WEST	DATE 2003

MICRO-FILM INFORMATION

RECORDED BY	
DATE	
NO.	

BENCH MARKS

ACS MONUMENT "NM45-4A"
CENTRAL STATION DATA SOUTH OF BRIDGE BETWEEN SOUTH COORS AND UNIVERSITY BLVD.
NM STATE PLANE COORDINATES
Central Zone (NAD 1927)
X=365,169.46
Y=1,480,226.55
G-G=0.9996815
Dg=-00°15'32"
EL.=5002.981 (SLD 1929)

SURVEY INFORMATION

FIELD NOTES

NO.	BY	DATE

ENGINEER'S SEAL

REVISIONS

NO.	DATE	REMARKS	BY

DESIGN

DESIGNED BY	JDN	DATE 08-02
DRAWN BY	JDN	DATE 10/08/02
DRAWN NAME:	WHITEPP.DWG	21117
CHECKED BY	RRB	DATE 08-02

TIERRA WEST, LLC
8509 JEFFERSON NE
ALBUQUERQUE, NEW MEXICO 87113
(505)858-3100

CITY OF ALBUQUERQUE
PUBLIC WORKS DEPARTMENT
ENGINEERING GROUP

TITLE: VISTA PACIFICA SUBDIVISION
PAVING IMPROVEMENTS
WHITE RESERVE AVE. STA: 10+00.00 TO STA: 19+45.28

DESIGN REVIEW COMMITTEE — JAN - 8 2003 — DESIGN REVIEW COMMITTEE

CITY ENGINEER APPROVAL — JAN 10 2003 — CITY ENGINEER

LAST DESIGN UPDATE | MO./DAY/YR. | MO./DAY/YR.

CITY PROJECT NO. 695081 | ZONE MAP NO. K-11-Z | SHEET 11 OF 25

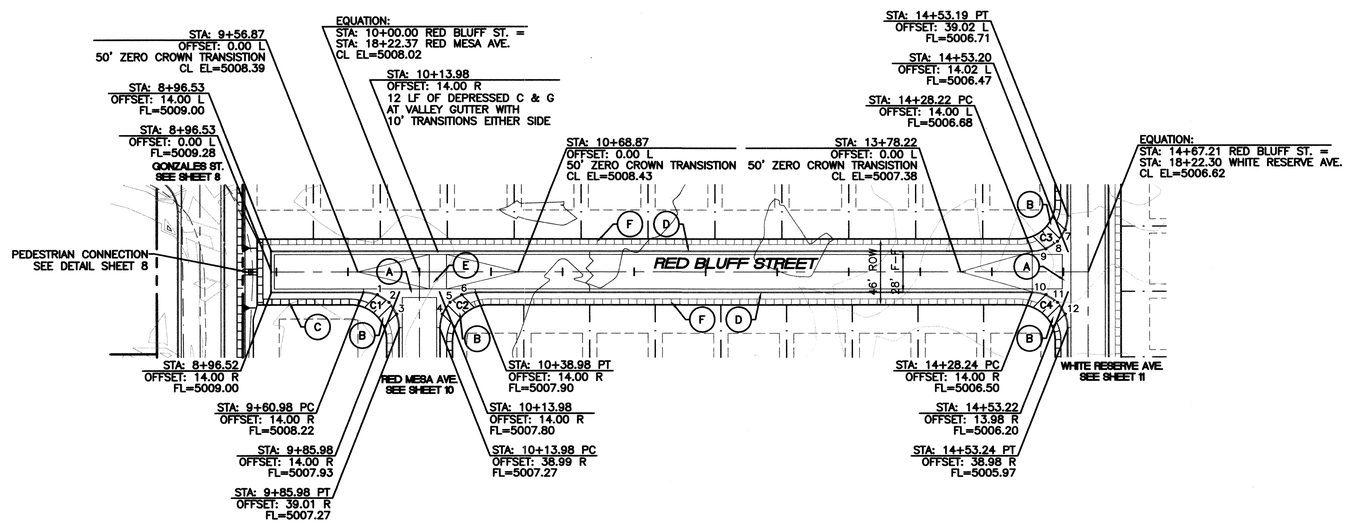

SCANNED BY
MESA REPRO

KEYED NOTE:

- (A) 6' VALLEY GUTTER PER C.O.A. STD DWG #2420
- (B) TYPE II WHEELCHAIR RAMP PER C.O.A. STD DWG #2441
- (C) 4' SIDEWALK TO BE BUILT WITH THIS CONTRACT PER C.O.A. STD DWG #2430
- (D) MOUNTABLE CURB & GUTTER PER C.O.A. STD DWG #2415
- (E) 12' VALLEY GUTTER PER C.O.A. STD DWG #2422
- (F) 4' SIDEWALK (DEFERRED)

NOTE:

1. SEE MASTER PAVING PLAN FOR STREET SECTIONS AND WHEELCHAIR RAMP TYPES.
2. ALL CURB AND GUTTER is TO BE MOUNTABLE UNLESS OTHERWISE NOTED.
3. CROWN TRANSITIONS PER COA STD DWG #2401

CURVE TABLE

CURVE	LENGTH	RADIUS	TANGENT	DELTA	CHORD BEARING	CHORD LENGTH
C1	39.28	25.00	25.01	90°01'37"	N30°03'37"E	35.36
C2	39.26	25.00	24.99	89°58'23"	S59°56'23"E	35.35
C3	39.29	25.00	25.02	90°02'23"	S59°58'23"E	35.37
C4	39.25	25.00	24.98	89°57'37"	N30°01'37"E	35.34

QUARTER POINTS

C1

FL	ELEV.
1	5007.98
2	5007.75
3	5007.51

C2

FL	ELEV.
4	5007.43
5	5007.59
6	5007.74

C3

FL	ELEV.
7	5006.59
8	5006.58
9	5006.58

C4

FL	ELEV.
10	5006.37
11	5006.24
12	5006.10

SCALE: HORIZ. 1"=50'
VERT. 1"=5'

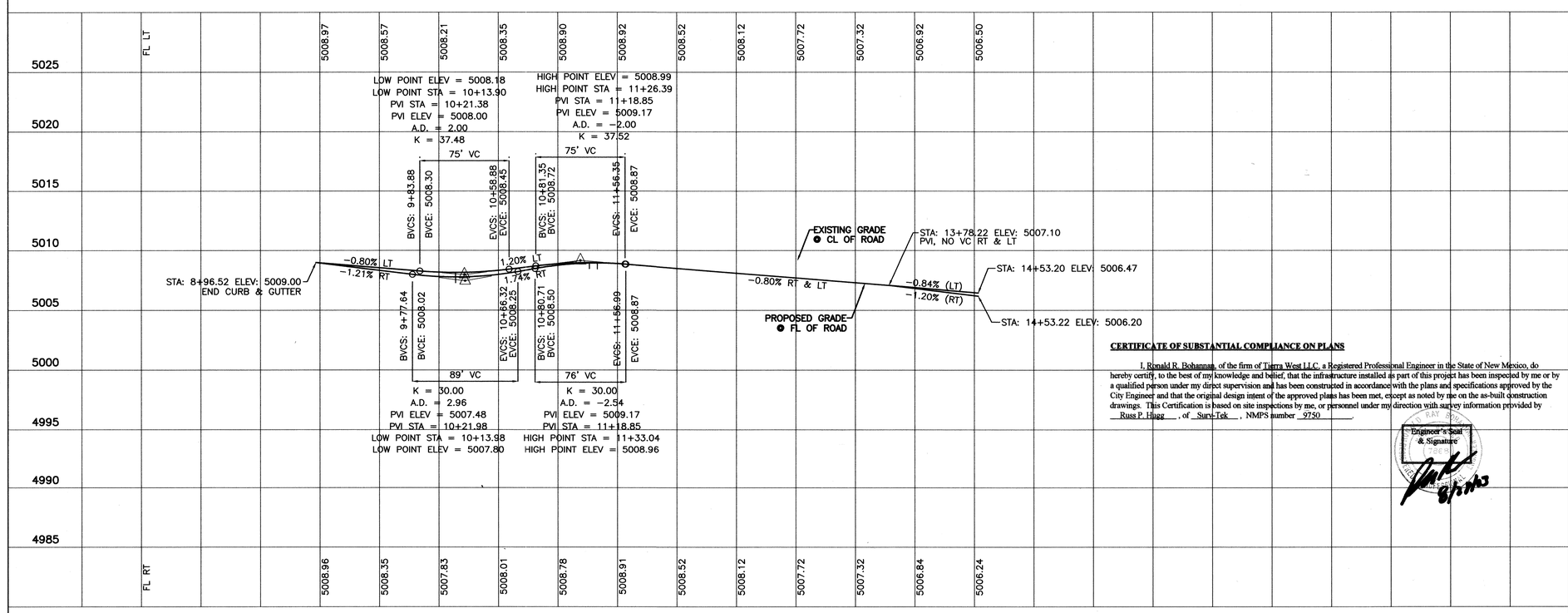

CERTIFICATE OF SUBSTANTIAL COMPLIANCE ON PLANS

I, Ronald R. Bohannan, of the firm of Tierra West LLC, a Registered Professional Engineer in the State of New Mexico, do hereby certify, to the best of my knowledge and belief, that the infrastructure installed as part of this project has been inspected by me or by a qualified person under my direct supervision and has been constructed in accordance with the plans and specifications approved by the City Engineer and that the original design intent of the approved plans has been met, except as noted by me on the as-built construction drawings. This Certification is based on site inspections by me, or personnel under my direction with survey information provided by Russ P. Hugg, of Surv-Tek, NMPS number 9750.

Engineer's Seal & Signature

8-20-03

AS BUILT INFORMATION

CONTRACTOR	CSM, INC.	2003
WORK STAKED BY	SURV-TEK	DATE 20023
INSPECTOR'S ACCEPTANCE BY	COA/TW	DATE 20023
FIELD VERIFICATION BY	COA/TW	DATE 2003/03
DRAWINGS CORRECTED BY	TIERRA WEST	DATE 2003

MICRO-FILM INFORMATION

RECORDED BY	DATE
NO.	

BENCH MARKS

ACS MONUMENT "NM45-4A"
CENTRAL STATION DATA SOUTH OF BRIDGE BETWEEN SOUTH COORS AND TOWER RD.
NM STATE PLANE COORDINATES
Central Zone (NAD 1927)
X=365,169.46
Y=1,480,226.55
G-G=0.9996815
Dg=-00°15'32"
EL.=5002.981 (SLD 1929)

SURVEY INFORMATION

FIELD NOTES

NO.	BY	DATE

ENGINEER'S SEAL

REGISTERED PROFESSIONAL ENGINEER RONALD RAY BOHANNAN 8-20-03

NO.	DATE	REMARKS	BY
		REVISIONS	

DESIGN

DESIGNED BY	JDN	DATE 08-02
DRAWN BY	JDN	DATE 08-21-02
DRAWN NAME:	REDBUPP.DWG	21117
CHECKED BY	RRB	DATE 08-02

TIERRA WEST, LLC
8509 JEFFERSON NE
ALBUQUERQUE, NEW MEXICO 87113
(505)858-3100

CITY OF ALBUQUERQUE
PUBLIC WORKS DEPARTMENT
ENGINEERING GROUP

TITLE: **VISTA PACIFICA SUBDIVISION**
PAVING IMPROVEMENTS
RED BLUFF ST. STA: 10+00.00 TO STA: 14+67.21

DESIGN REVIEW COMMITTEE	CITY ENGINEER APPROVAL	LAST DESIGN UPDATE	MO./DAY/YR.	MO./DAY/YR.
DESIGN REVIEW COMMITTEE	JAN 10 2003 CITY ENGINEER			

CITY PROJECT NO.	ZONE MAP NO.	SHEET
695081	K-11-Z	12 OF 25

KEYED NOTE:

- (A) 6' VALLEY GUTTER PER C.O.A. STD DWG #2420
- (B) CASE II WHEELCHAIR RAMP PER C.O.A. STD DWG #2441
- (C) 4' SIDEWALK (DEFERRED)
- (D) MOUNTABLE CURB & GUTTER PER C.O.A. STD DWG #2415

QUARTER POINTS

C1	FL	ELEV.
	1	5005.94
	2	5005.90
	3	5005.86

C2	FL	ELEV.
	4	5005.36
	5	5005.46
	6	5005.56

C3	FL	ELEV.
	7	5004.96
	8	5004.96
	9	5004.95

C4	FL	ELEV.
	10	5004.82
	11	5004.80
	12	5004.67

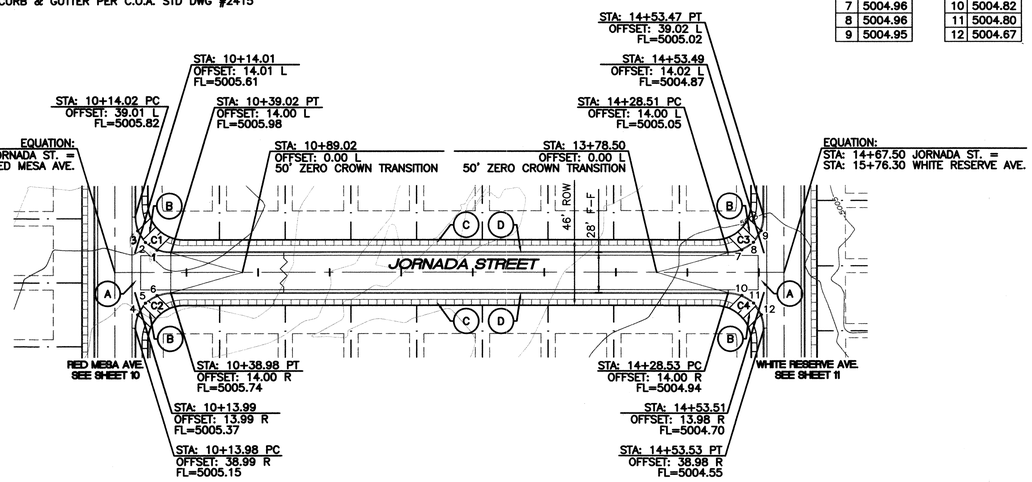

SCANNED BY
MESA REPRO

CURVE TABLE						
CURVE	LENGTH	RADIUS	TANGENT	DELTA	CHORD BEARING	CHORD LENGTH
C1	39.25	25.00	24.98	89°57'37"	N30°01'37"E	35.34
C2	39.26	25.00	24.99	89°58'23"	N59°56'23"W	35.35
C3	39.29	25.00	25.02	90°02'23"	S59°58'23"E	35.37
C4	39.19	25.00	24.92	89°49'35"	S60°00'48"E	35.30

NOTE:

1. SEE MASTER PAVING PLAN FOR STREET SECTIONS AND WHEELCHAIR RAMP TYPES.
2. ALL CURB AND GUTTER IS TO BE MOUNTABLE UNLESS OTHERWISE NOTED.
3. CROWN TRANSITIONS PER COA STD DWG #2401

SCALE: HORIZ. 1"=50'
VERT. 1"=5'

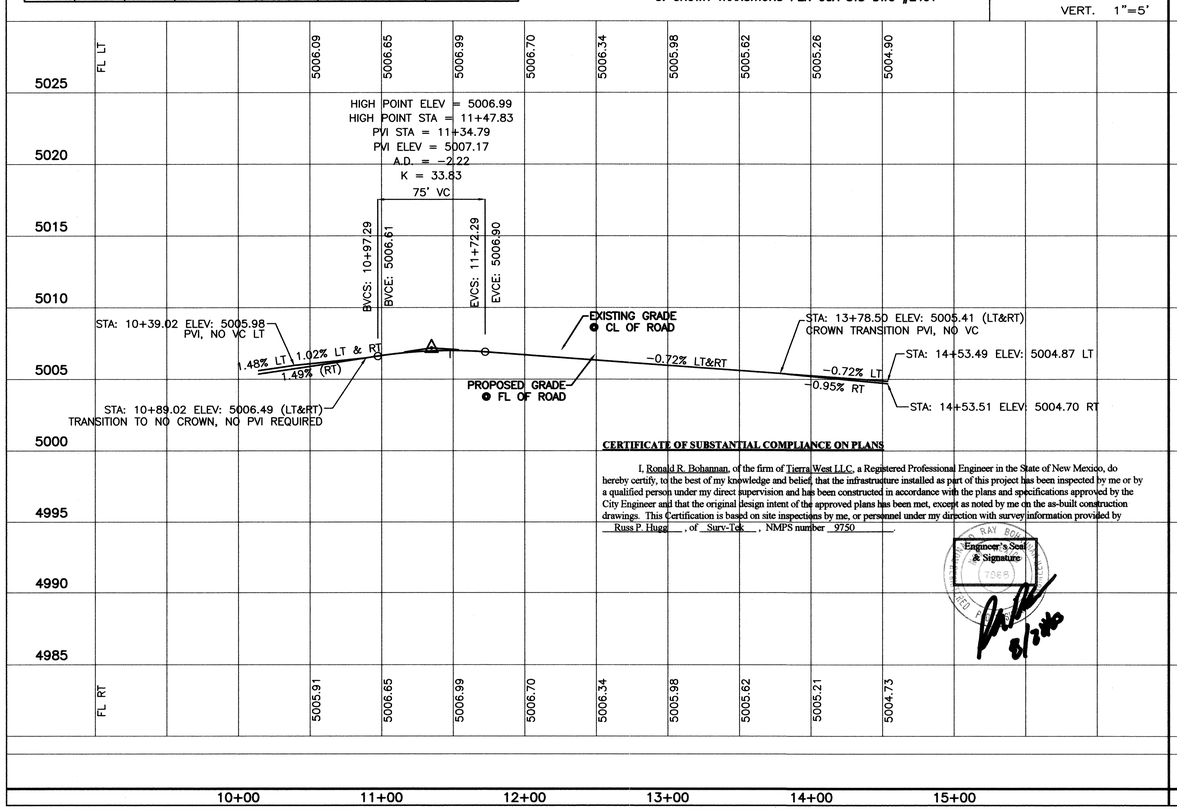

CERTIFICATE OF SUBSTANTIAL COMPLIANCE ON PLANS

I, Ronald R. Bohannan, of the firm of Tierra West LLC, a Registered Professional Engineer in the State of New Mexico, do hereby certify, to the best of my knowledge and belief, that the infrastructure installed as part of this project has been inspected by me or by a qualified person under my direct supervision and has been constructed in accordance with the plans and specifications approved by the City Engineer and that the original design intent of the approved plans has been met, except as noted by me on the as-built construction drawings. This Certification is based on site inspections by me, or personnel under my direction with survey information provided by Russ P. Hugg, of Surv-Tek, NMPS number 9750.

Engineer's Seal & Signature

8/3/06

KEYED NOTE:

- (A) 6' VALLEY GUTTER PER C.O.A. STD DWG #2420
- (B) CASE II WHEELCHAIR RAMP PER C.O.A. STD DWG #2441
- (C) 4' SIDEWALK (DEFERRED)
- (D) MOUNTABLE CURB & GUTTER PER C.O.A. STD DWG #2415

QUARTER POINTS

C1	FL	ELEV.
	1	5003.94
	2	5003.86
	3	5003.93

C2	FL	ELEV.
	4	5003.29
	5	5003.53
	6	5003.76

C3	FL	ELEV.
	7	5004.96
	8	5005.26
	9	5005.34

C4	FL	ELEV.
	10	5005.70
	11	5005.76
	12	5005.82

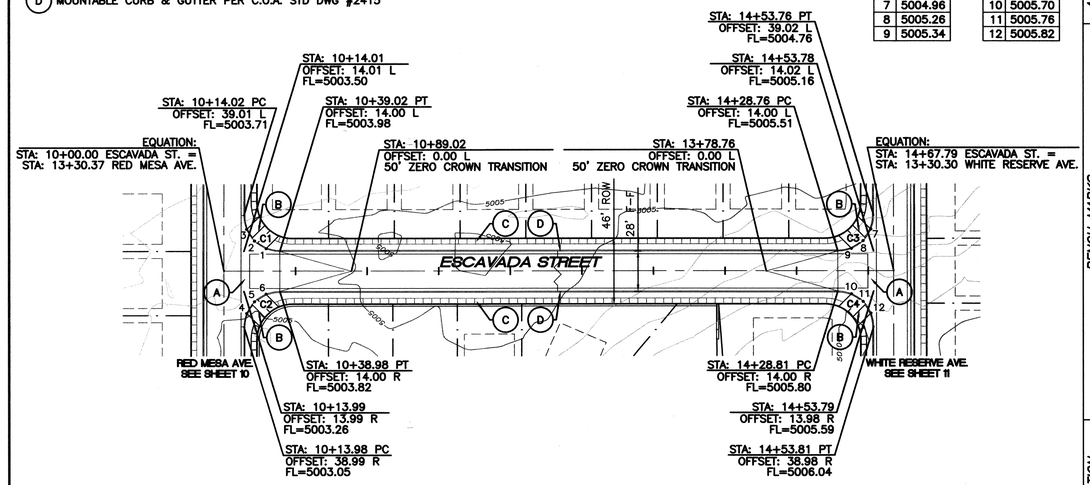

CURVE TABLE						
CURVE	LENGTH	RADIUS	TANGENT	DELTA	CHORD BEARING	CHORD LENGTH
C1	39.28	25.00	25.01	90°01'37"	S30°03'37"W	35.36
C2	39.26	25.00	24.99	89°58'23"	N59°56'23"W	35.35
C3	39.29	25.00	25.02	90°02'23"	S59°58'23"E	35.37
C4	39.25	25.00	24.98	89°57'37"	N30°01'37"E	35.37

NOTE:

1. SEE MASTER PAVING PLAN FOR STREET SECTIONS AND WHEELCHAIR RAMP TYPES.
2. ALL CURB AND GUTTER IS TO BE MOUNTABLE UNLESS OTHERWISE NOTED.
3. CROWN TRANSITIONS PER COA STD DWG #2401

SCALE: HORIZ. 1"=50'
VERT. 1"=5'

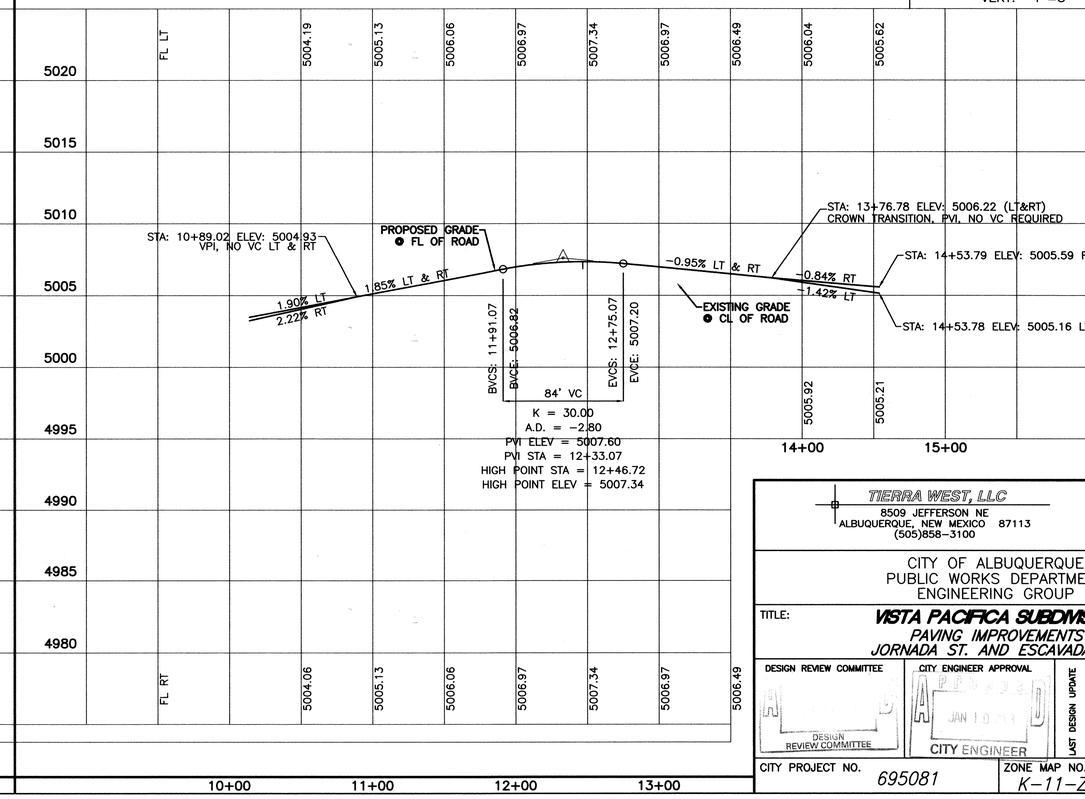

AS BUILT INFORMATION

CONTRACTOR	C.O.A. INC.	2003
SURV-TEK		20023
WORK STAKED BY		
INSPECTOR'S ACCEPTANCE BY	COA/TW	DATE 20023
FIELD VERIFICATION BY	COA/TW	DATE 20023
DRAWINGS CORRECTED BY	TERRA WEST	DATE 2003

MICRO-FILM INFORMATION

RECORDED BY	
DATE	
NO.	

BENCH MARKS

ACS MONUMENT "NM45-4A"
CENTRAL STATION DATA SOUTH OF BRIDGE BETWEEN SOUTH COORS AND UNIVERSITY BLVD.
NM STATE PLANE COORDINATES
Central Zone (NAD 1927)
X=365,169.46
Y=1,480,226.55
G-G=0.9996815
Dg=-00°15'32"
EL.=5002.981 (SLD 1929)

SURVEY INFORMATION

FIELD NOTES

NO.	BY	DATE

ENGINEER'S SEAL

NO.	DATE	REMARKS	BY
		REVISIONS	

DESIGN

DESIGNED BY	JDN	DATE 08-02
DRAWN BY	JDN	DATE 10/08/02
DRAWN NAME:	JORNAPP.DWG	21117
CHECKED BY	RRB	DATE 08-02

TIERRA WEST, LLC
8509 JEFFERSON NE
ALBUQUERQUE, NEW MEXICO 87113
(505)858-3100

CITY OF ALBUQUERQUE
PUBLIC WORKS DEPARTMENT
ENGINEERING GROUP

TITLE: **VISTA PACIFICA SUBDIVISION**
PAVING IMPROVEMENTS
JORNADA ST. AND ESCAVADA ST.

DESIGN REVIEW COMMITTEE	CITY ENGINEER APPROVAL	LAST DESIGN UPDATE	MO./DAY/YR.	MO./DAY/YR.
DESIGN REVIEW COMMITTEE	JAN 10			

CITY PROJECT NO.	ZONE MAP NO.	SHEET
695081	K-11-Z	13 OF 25

KEYED NOTE:

- (A) 6' VALLEY GUTTER PER C.O.A. STD DWG #2420
- (B) CASE II WHEELCHAIR RAMP PER C.O.A. STD DWG #2441
- (C) 4' SIDEWALK TO BE BUILT WITH THIS CONTRACT PER C.O.A. STD DWG #2430
- (D) STANDARD CURB & GUTTER PER C.O.A. STD DWG #2415
- (E) EXTRUDED ASPHALT CURB PER COA STD DWG #2415

QUARTER POINTS

C1 FL	ELEV.	C2 FL	ELEV.
1	5012.35	4	5011.80
2	5012.31	5	5011.91
3	5012.27	6	5012.02

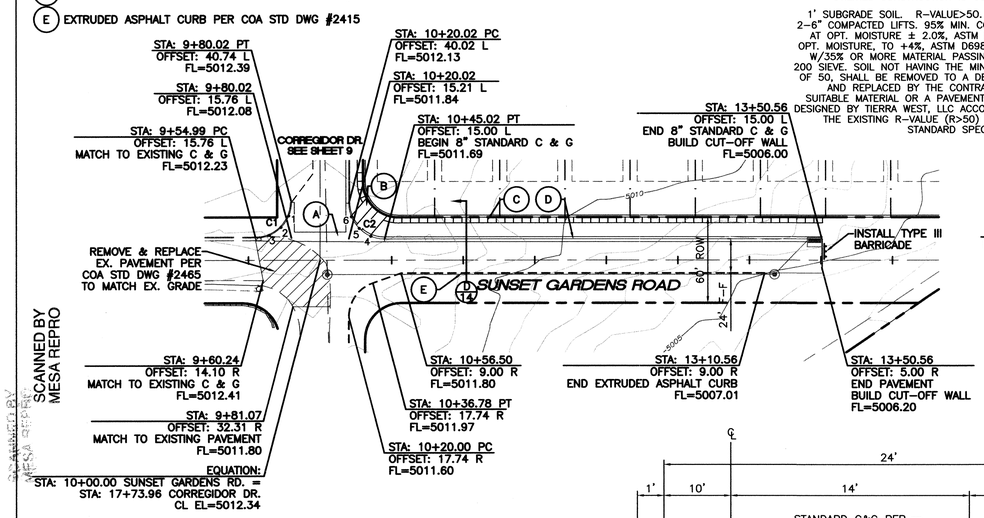

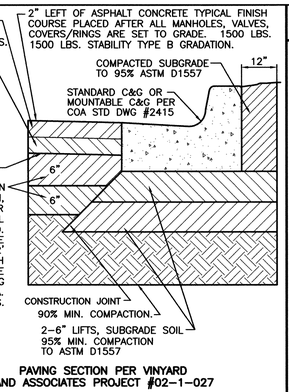

PAVING SECTION PER VINYARD AND ASSOCIATES PROJECT #02-1-027

SUNSET GARDENS RD. PAVING SECTION
NTS

NOTE:

1. SEE MASTER PAVING PLAN FOR STREET SECTIONS AND WHEELCHAIR RAMP TYPES.
2. ALL CURB AND GUTTER IS TO BE 8" STANDARD UNLESS OTHERWISE NOTED.
3. CROWN TRANSITIONS PER COA STD DWG #2401

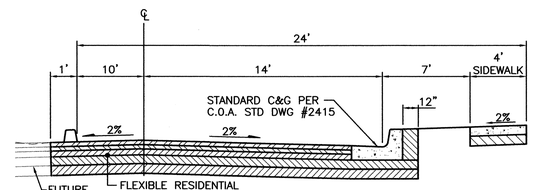

SECTION D-D
NTS

SCALE: HORIZ. 1"=50'
VERT. 1"=5'

CURVE TABLE						
CURVE	LENGTH	RADIUS	TANGENT	DELTA	CHORD BEARING	CHORD LENGTH
C1	39.28	25.00	25.01	90°01'51"	N30°03'12"E	35.36
C2	39.28	25.00	25.01	90°01'51"	S59°58'39"E	35.36

KEYED NOTE:

- (A) 6' VALLEY GUTTER PER C.O.A. STD DWG #2420
- (B) CASE II WHEELCHAIR RAMP PER C.O.A. STD DWG #2441
- (C) 4' SIDEWALK (DEFERRED)
- (D) MOUNTABLE CURB & GUTTER PER C.O.A. STD DWG #2415

QUARTER POINTS

C1 FL	ELEV.	C2 FL	ELEV.
1	5004.61	4	5005.99
2	5004.30	5	5005.71
3	5003.78	6	5005.42

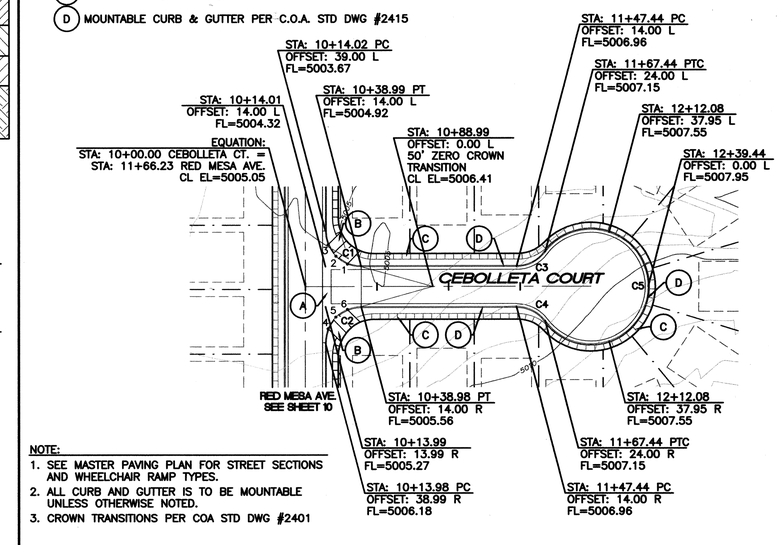

NOTE:

1. SEE MASTER PAVING PLAN FOR STREET SECTIONS AND WHEELCHAIR RAMP TYPES.
2. ALL CURB AND GUTTER IS TO BE MOUNTABLE UNLESS OTHERWISE NOTED.
3. CROWN TRANSITIONS PER COA STD DWG #2401

CURVE TABLE						
CURVE	LENGTH	RADIUS	TANGENT	DELTA	CHORD BEARING	CHORD LENGTH
C1	39.28	25.00	25.01	90°01'37"	S30°03'37"W	35.36
C2	39.26	25.00	24.99	89°58'23"	N59°56'23"W	35.35
C3	23.18	25.00	12.50	53°07'48"	S41°31'06"E	22.36
C4	23.18	25.00	12.50	53°07'48"	N11°36'43"E	22.36
C5	199.85	40.00	30.00	286°15'37"	N75°02'48"E	48.00

SCALE: HORIZ. 1"=50'
VERT. 1"=5'

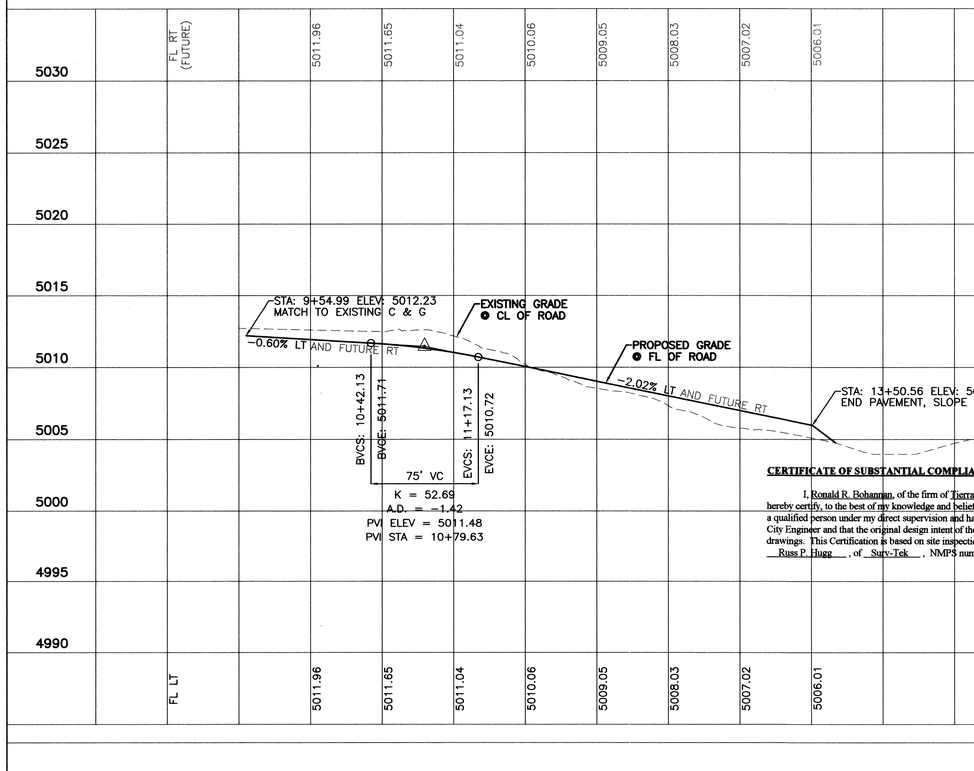

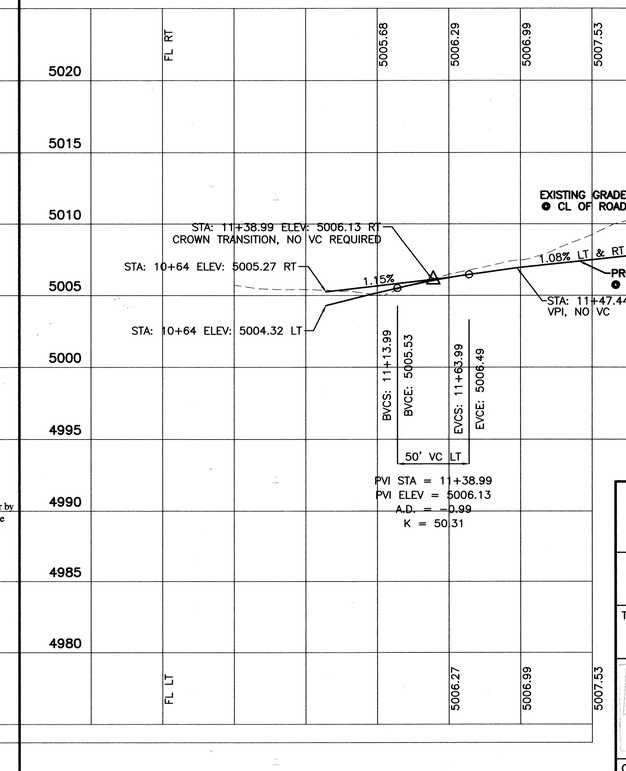

CERTIFICATE OF SUBSTANTIAL COMPLIANCE ON PLANS

I, Ronald R. Bohannan, of the firm of Tierra West LLC, a Registered Professional Engineer in the State of New Mexico, do hereby certify, to the best of my knowledge and belief, that the infrastructure installed as part of this project has been inspected by me or by a qualified person under my direct supervision and has been constructed in accordance with the plans and specifications approved by the City Engineer and that the original design intent of the approved plans has been met, except as noted by me on the as-built construction drawings. This Certification is based on site inspections by me, or personnel under my direction with survey information provided by Russ P. Hugg, of Surv-Tek, NMPS number 9750.

Engineer's Seal & Signature

8/21/02

AS BUILT INFORMATION
CONTRACTOR: CCBL INC. 2003
WORK STAKED BY: SURV-TEK DATE 20023
INSPECTOR'S ACCEPTANCE BY: COA/TW DATE 20023
FIELD VERIFICATION BY: COA/TW DATE 2003/08
DRAWINGS CORRECTED BY: TIERRA WEST DATE 2003
MICRO-FILM INFORMATION
RECORDED BY: DATE
NO.

BENCH MARKS
ACS MONUMENT "NM45-4A"
CENTRAL STATION DATA SOUTH OF BRIDGE BETWEEN SOUTH COORS AND
NM STATE PLANE COORDINATES
Central Zone (NAD 1927)
X=365,169.46
Y=1,480,226.55
G-G=0.9996815
Dg=-00°15'32"
EL=5002.981 (SLD 1929)

SURVEY INFORMATION
FIELD NOTES
NO. | BY | DATE

ENGINEER'S SEAL
RONALD R. BOHANNAN NEW MEXICO 7868 PROFESSIONAL ENGINEER

NO.	DATE	REMARKS	BY
		REVISIONS	

DESIGN
DESIGNED BY JDN DATE 08-02
DRAWN BY JDN DATE 08-21-02
DRAWN NAME: SUNSETPP.DWG 21117
CHECKED BY RRB DATE 08-02

TIERRA WEST, LLC
8509 JEFFERSON NE
ALBUQUERQUE, NEW MEXICO 87113
(505)858-3100

CITY OF ALBUQUERQUE
PUBLIC WORKS DEPARTMENT
ENGINEERING GROUP

TITLE: **VISTA PACIFICA SUBDIVISION**
PAVING IMPROVEMENTS
SUNSET GARDENS RD. AND CEBOLLETA CT.

DESIGN REVIEW COMMITTEE: APPROVED 2002-4-24 DESIGN REVIEW COMMITTEE
CITY ENGINEER APPROVAL: APPROVED JAN 10 2003 CITY ENGINEER
LAST DESIGN UPDATE | MO./DAY/YR. | MO./DAY/YR.

CITY PROJECT NO. 695081
ZONE MAP NO. K-11-Z
SHEET 14 OF 25

SCANNED BY MESA REPRO

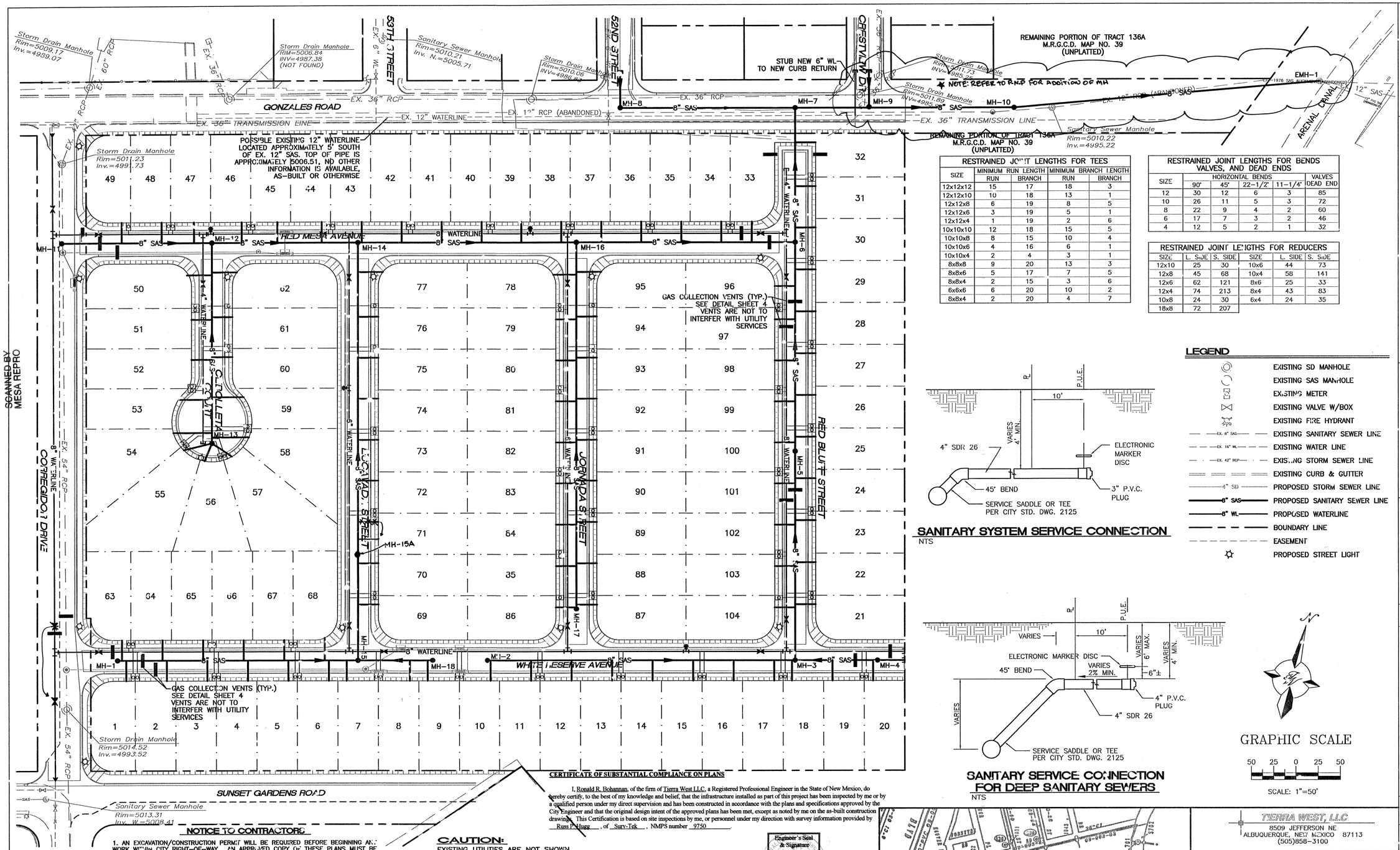

SCANNED BY MESA REPRO

RESTRAINED JOINT LENGTHS FOR TEES				
SIZE	MINIMUM RUN LENGTH		MINIMUM BRANCH LENGTH	
	RUN	BRANCH	RUN	BRANCH
12x12x12	15	17	18	3
12x12x10	10	18	13	1
12x12x8	6	19	8	5
12x12x6	3	19	5	1
12x12x4	1	19	2	6
10x10x10	12	18	15	5
10x10x8	8	15	10	4
10x10x6	4	16	6	1
10x10x4	2	4	3	1
8x8x8	9	20	13	3
8x8x6	5	17	7	5
8x8x4	2	15	3	6
6x6x6	6	20	10	2
8x8x4	2	20	4	7

RESTRAINED JOINT LENGTHS FOR BENDS VALVES, AND DEAD ENDS					
SIZE	HORIZONTAL BENDS				VALVES DEAD END
	90°	45°	22-1/2°	11-1/4°	
12	30	12	6	3	85
10	26	11	5	3	72
8	22	9	4	2	60
6	17	7	3	2	46
4	12	5	2	1	32

RESTRAINED JOINT LENGTHS FOR REDUCERS					
SIZE	L. SIDE	S. SIDE	SIZE	L. SIDE	S. SIDE
12x10	25	30	10x6	44	73
12x8	45	68	10x4	58	141
12x6	62	121	8x6	25	33
12x4	74	213	8x4	43	83
10x8	24	30	6x4	24	35
18x8	72	207			

SANITARY SYSTEM SERVICE CONNECTION

NTS

LEGEND

- EXISTING SD MANHOLE
- EXISTING SAS MANHOLE
- EXISTING METER
- EXISTING VALVE W/BOX
- EXISTING FIRE HYDRANT
- EXISTING SANITARY SEWER LINE
- EXISTING WATER LINE
- EXISTING STORM SEWER LINE
- EXISTING CURB & GUTTER
- PROPOSED STORM SEWER LINE
- PROPOSED SANITARY SEWER LINE
- PROPOSED WATERLINE
- BOUNDARY LINE
- EASEMENT
- PROPOSED STREET LIGHT

SANITARY SERVICE CONNECTION FOR DEEP SANITARY SEWERS

NTS

GRAPHIC SCALE

50 25 0 25 50

SCALE: 1"=50'

CERTIFICATE OF SUBSTANTIAL COMPLIANCE ON PLANS

I, Ronald R. Bohannan, of the firm of Tierra West LLC, a Registered Professional Engineer in the State of New Mexico, do hereby certify, to the best of my knowledge and belief, that the infrastructure installed as part of this project has been inspected by me or by a qualified person under my direct supervision and has been constructed in accordance with the plans and specifications approved by the City Engineer and that the original design intent of the approved plans has been met, except as noted by me on the as-built construction drawings. This Certification is based on site inspections by me, or personnel under my direction with survey information provided by Russ Pettuga, of Surv-Tek, NMPS number 9750

Engineer's Seal & Signature

NOTICE TO CONTRACTORS

1. AN EXCAVATION/CONSTRUCTION PERMIT WILL BE REQUIRED BEFORE BEGINNING ANY WORK WITHIN CITY RIGHT-OF-WAY. AN APPROVED COPY OF THESE PLANS MUST BE SUBMITTED AT THE TIME OF APPLICATION FOR THIS PERMIT.
2. ALL WORK DETAILED ON THESE PLANS TO BE PERFORMED, EXCEPT AS OTHERWISE STATED OR PROVIDED HEREON, SHALL BE CONSTRUCTED IN ACCORDANCE WITH CITY OF ALBUQUERQUE INTERIM STANDARD SPECIFICATIONS FOR PUBLIC WORKS CONSTRUCTION, 1995.
3. TWO WORKING DAYS PRIOR TO ANY EXCAVATION, CONTRACTOR MUST CONTACT LINE LOCATING SERVICE, 765-1234, FOR LOCATION OF EXISTING UTILITIES.
4. PRIOR TO CONSTRUCTION, THE CONTRACTOR SHALL EXCAVATE AND VERIFY THE HORIZONTAL AND VERTICAL LOCATIONS OF ALL CONSTRUCTIONS. SHOULD A CONFLICT EXIST, THE CONTRACTOR SHALL NOTIFY THE ENGINEER SO THAT THE CONFLICT CAN BE RESOLVED WITH A MINIMUM AMOUNT OF DELAY.
5. BACKFILL COMPACTION SHALL BE ACCORDING TO RESIDENTIAL STREET USE.
6. MAINTENANCE OF THESE FACILITIES SHALL BE THE RESPONSIBILITY OF THE OWNER OF THE PROPERTY SERVED.
7. WORK ON ARTERIAL STREETS SHALL BE PERFORMED ON A 24-HOUR BASIS.
8. CONTRACTOR IS RESPONSIBLE TO PROVIDE UTILITY STUBS 5' FROM BUILDING

CAUTION:

EXISTING UTILITIES ARE NOT SHOWN. IT SHALL BE THE SOLE RESPONSIBILITY OF THE CONTRACTOR TO CONDUCT ALL NECESSARY FIELD INVESTIGATIONS PRIOR TO ANY EXCAVATION TO DETERMINE THE ACTUAL LOCATION OF UTILITIES & OTHER IMPROVEMENTS.

All waterline PVC c900, sanitary PVC SDR35

NOTES:
1. ONLY C.O.A. WATER SYSTEMS PERSONNEL ARE AUTHORIZED TO OPERATE VALVES.
2. NOTIFY CITY OF ALBUQUERQUE, WATER SYSTEMS DIVISION (PHONE 857-8200) SEVEN (7) WORKING DAYS IN ADVANCE OF NEEDING EXECUTION OF THE WATER SHUT OFF PLAN
3. APPROXIMATE SHUT OFF TIME WILL BE 24 HOURS.
4. SHUTOFF THE VALVES INDICATED IN THE PLAN.

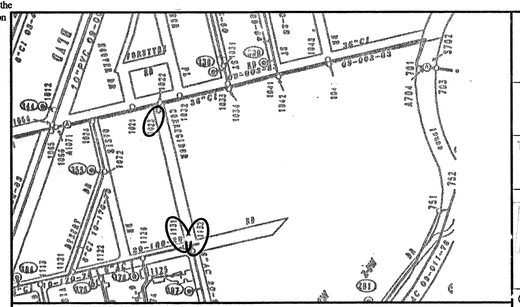

WATER SHUT-OFF PLAN — SHUT-OFF VALVES #1023, 1151 AND 1152

AS BUILT INFORMATION

CONTRACTOR	CGM, INC.	2003
W.L.&K. STAKED BY	SURV-TEK	DATE 20023
ACCEPTANCE BY	CO.A/TW	DATE 20023
FIELD VERIFICATION BY	CO.A/TW	DATE 2002/03
DRAWN BY	TIERRA WEST	DATE 2003
CORRECTED BY		
MICRO-FILM INFORMATION		
RECORDED BY		DATE
NO.		

BENCH MARKS

ACS MONUMENT "NM45-4A"
CENTRAL STATION DATA - -
NM STATE PLANE COORDINATES
Central Zone (NAD 1927)
X=365,159.45
Y=1,430,226.55
G-G=0.9996815
Dc=-00°15'32"
EL.=5002.981 (SLD 1929)

SURVEY INFORMATION

FIELD NOTES

NO.	BY	DATE

ENGINEER'S SEAL

RONALD R. BOHANNAN NEW MEXICO 9750 PROFESSIONAL ENGINEER 12/17/02

NO.	DATE	REMARKS	BY
		REVISIONS	

DESIGN		
DESIGNED BY	JDN	DATE 08-02
DRAWN BY	JDN	DATE 11-25-02
DRAWN NAME:	21117MUDRC.DWG	
CHECKED BY	PR	DATE 08-02

TIERRA WEST, LLC
8509 JEFFERSON NE
ALBUQUERQUE, NEW MEXICO 87113
(505)858-3100

CITY OF ALBUQUERQUE
PUBLIC WORKS DEPARTMENT
ENGINEERING GROUP

TITLE: VISTA PACIFICA SUBDIVISION
MASTER UTILITY PLAN

DESIGN REVIEW COMMITTEE	CITY ENGINEER APPROVAL	LAST DESIGN UPDATE	MO./DAY/YR.	MO./DAY/YR.
APPROVED MAR - 8 2003 DESIGN REVIEW COMMITTEE	APPROVED JAN 16 2003 CITY ENGINEER			

CITY PROJECT NO. 695081 | ZONE MAP NO. K-11-Z | SHEET 15 OF 25

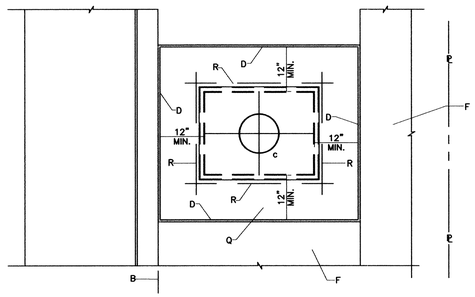

PLAN

SEE DWG. 2361 FOR TYPICAL INSTALLATIONS

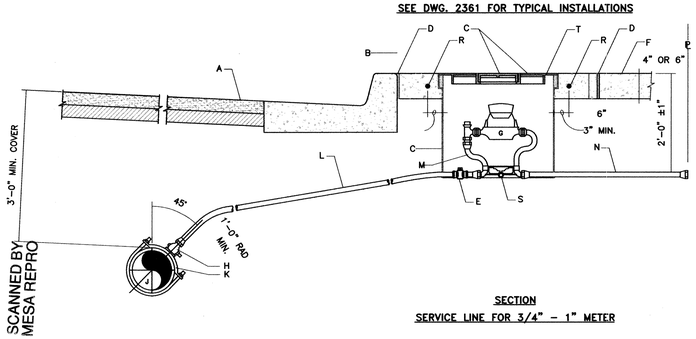

SECTION

SERVICE LINE FOR 3/4" – 1" METER

GENERAL NOTES:

1 THE METER SHALL BE SET UTILIZING A COPPER–SETTER. COPPER–SETTER HEIGHT 10" FOR 1" METER. 7" FOR 3/4" METER.

2 THE VALVE AND METER REGISTER BOX SHALL BE LOCATED UNDER THE LID OPENING. WHERE TWO METERS ARE TO BE INSTALLED IN A SINGLE METER BOX, THE METER REGISTERS SHALL BE WITHIN READING RANGE OF THE LID OPENING.

3 METER BOX LOCATION TO CONFORM TO DWG. 2361.

4 WHEN CONTRACTOR DOES NOT INSTALL METER, CONTRACTOR SHALL PROVIDE REMOVABLE PLUGS FOR END OF COPPER–SETTER.

5 EXISTING CONCRETE TO BE SAWCUT.

CONSTRUCTION NOTES:

A STREET SURFACE.

B BACK OF CURB.

C CAST IRON METER BOX, COVER AND LID. SEE DWG. 2368 OR 2369.

D 1/2" EXPANSION JOINT.

E CURB STOP, LOCATE INSIDE METER BOX.

F SIDEWALK OR DRIVEPAD.

G METER. TOP OF METER TO BE 12"–18" BELOW COVER.

H CORP STOP.

J MAIN WATER LINE.

K TAPPING SADDLE.

L COPPER SERVICE LINE.

M COPPER SETTER.

N TAILPIECE TO PROPERTY LINE WITH INSTA–TITE I.P.T. CAPPED FITTING.

Q CONCRETE PAD REQUIRED IN ALL AREAS.

R #4 REBAR CONTINUOUS ALL AROUND METER BOX.

S STABILIZER BAR. 12" LONG X 1/2" DIAMETER GALVANIZED STEEL PIPE.

T METER BOX LID SHALL BE FLUSH WITH SURROUNDING SIDEWALK.

REVISIONS	CITY OF ALBUQUERQUE WATER 3/4" – 1" METERED SERVICE LINE INSTALLATION DWG. 2362 MAR 2001

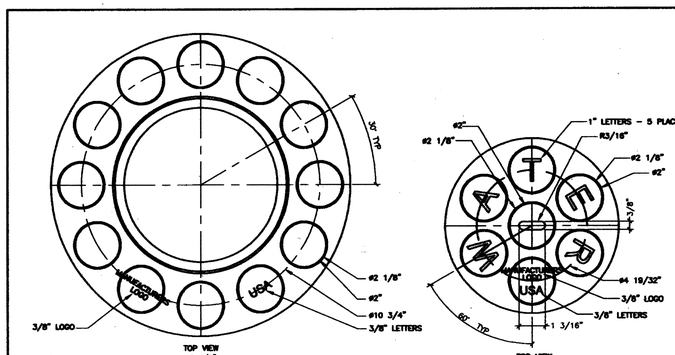

GENERAL NOTES – RING

1 ALBUQUERQUE VALVE BOX RING DESIGNED TO ACCEPT AN ALBUQUERQUE VALVE BOX COVER.

2 THE CASTING NUMBER, MANUFACTURER'S LOGO, DATE OF MANUFACTURE AND "USA" SHALL BE CAST IN A CONSPICUOUS LOCATION ON BOTH THE RING AND THE COVER.

3 FILLETS SHALL BE 1/4"R UNLESS OTHERWISE SPECIFIED.

4 A DRAFT ANGLE OF 3°–5° SHALL BE APPLIED UNLESS OTHERWISE SPECIFIED.

5 FINISH: REMOVE EXCESS IRON AND FINS.

6 THIS DETAIL DOES NOT APPLY FOR VALVE BOX RING AND COVER TO BE USED ON REUSE OR NON–POTABLE WATER SYSTEMS.

GENERAL NOTES – COVER

1 ALBUQUERQUE VALVE BOX COVER DESIGNED TO FIT INTO AN ALBUQUERQUE VALVE BOX RING.

2 THE CASTING NUMBER, MANUFACTURER'S LOGO, DATE OF MANUFACTURE AND "USA" SHALL BE CAST IN A CONSPICUOUS LOCATION ON BOTH THE RING AND THE COVER.

3 FILLETS SHALL BE 1/4"R UNLESS OTHERWISE SPECIFIED.

4 A DRAFT ANGLE OF 3°–5° SHALL BE APPLIED UNLESS OTHERWISE SPECIFIED.

5 FINISH: REMOVE EXCESS IRON AND FINS.

REVISIONS	CITY OF ALBUQUERQUE WATER RING AND COVER FOR VALVE BOX DWG. 2326 JANUARY 2002

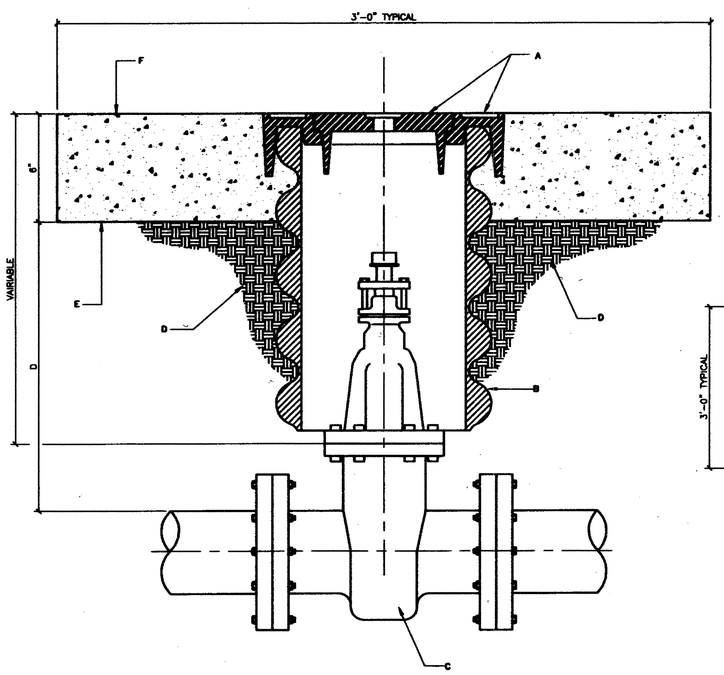

GENERAL NOTES:

A VALVE BOX RING AND COVER. SEE DWG. 2326.

B 10" DIAMETER RIBBED OR CORRUGATED PVC OR PE PIPE WITH SMOOTH INTERIOR.

C NEW OR EXISTING VALVE.

D COMPACTED BACKFILL. SOIL OR BASE COURSE MATERIAL (95% COMPACTION). SEE SECTION 701.

E 3'–6"x3'–0" OCTAGONAL CONCRETE COLLAR. COLLAR IS TO BE TAPERED IN UNPAVED ROADWAYS AND FLUSH IN PAVED ROADWAY. CONCRETE STRENGTH SHALL BE PER SECTION 101 OF THE STANDARD SPECIFICATIONS, LATEST EDITION.

F TOP OF CONCRETE COLLAR SHALL BE STAMPED WITH LINE SIZE AND DIRECTION. MINIMUM LETTER SIZE SHALL BE 3" IN HEIGHT.

REVISIONS	CITY OF ALBUQUERQUE WATER VALVE BOX DWG. 2325 JANUARY 2002

4A SERIES – 4" DOUBLE WALL

MODEL	SIZE H	SIZE L	PIPE CLRNCE	WEIGHT (LBS)	PSF	MAX DEPTH PER SOIL TYPE (FT) A	B	C-60	C-80
4A4'12	4'	12'	19"	3422	3422	141	78	59	45
4A4'16	4'	16'	19"	4202	1852	76	43	33	25
4A4'18	4'	18'	19"	4650	1449	60	34	26	20
4A420	4'	20'	19"	5038	1162	49	28	22	17
4A424	4'	24'	19"	5874	795	34	20	16	12
4A612	6'	12'	41"	4576	3615	124	70	53	41
4A616	6'	16'	41"	5640	1643	69	40	30	24
4A618	6'	18'	41"	6248	1284	54	31	24	19
4A620	6'	20'	41"	6780	1031	44	26	20	16
4A624	6'	24'	41"	7920	707	31	19	15	12
4A812	8'	12'	64"	5876	2128	89	52	39	31
4A816	8'	16'	64"	7264	1643	68	39	31	24
4A818	8'	18'	64"	8068	1283	56	33	25	20
4A820	8'	20'	64"	8764	1029	46	27	21	17
4A824	8'	24'	64"	10264	704	32	20	18	13

6A SERIES – 6' DOUBLE WALL

MODEL	SIZE H	SIZE L	PIPE CLRNCE	WEIGHT (LBS)	PSF	MAX DEPTH PER SOIL TYPE (FT) A	B	C-60	C-80
6A616	6'	16'	41"	6278	2597	107	61	46	36
6A620	6'	20'	41"	7482	1630	68	39	30	23
*6A624	6'	24'	41"	8686	1152	49	29	22	17
6A816	8'	16'	64"	8166	2161	89	51	39	30
6A820	8'	20'	64"	9810	1586	68	40	31	24
*6A822	8'	22'	64"	10554	1302	56	33	26	21
*6A824	8'	24'	64"	11454	1087	48	28	22	18
6A1010	10'	10'	86"	7162	3458	142	81	61	47
6A1012	10'	12'	86"	8074	2882	119	68	52	40
6A1016	10'	16'	86"	10090	2161	90	52	40	31
6A1020	10'	20'	86"	12106	1580	68	40	31	25
*6A1024	10'	24'	86"	14122	1083	48	29	23	18

8A SERIES – 8" DOUBLE WALL

MODEL	SIZE H	SIZE L	PIPE CLRNCE	WEIGHT (LBS)	PSF	MAX DEPTH PER SOIL TYPE (FT) A	B	C-60	C-80
8A816	8'	16'	62"	9292	3459	142	81	62	47
8A820	8'	20'	62"	11024	2171	91	52	40	31
8A824	8'	24'	62"	12756	1488	64	37	28	23
8A828	8'	28'	62"	14422	1082	47	28	22	18
8A830	8'	30'	62"	15354	940	42	25	20	16
8A1016	10'	16'	80"	11594	3375	140	80	61	42
8A1020	10'	20'	80"	13722	2165	92	53	41	32
8A1024	10'	24'	80"	15850	1484	64	38	30	24
8A1028	10'	28'	80"	17898	1080	48	29	23	19
8A1030	10'	30'	80"	19042	937	43	26	21	17

GME® A SERIES TRENCH SHIELDS

These shields require 8A Series Spreaders. Eight pins and keepers are included and must be used with shields at all times.

SOIL TYPE IS C–60

STACK AS NEEDED

These shields require 10A Series Spreaders. Sixteen pins and keepers are included and must be used with shields at all times.

8A Series Spreader Sets: for use on 4A - 4', 6' & 8' high shields and 6A - 6' & 8' high shields; includes 8 each 2" x 10" pins, 8" Schedule 80 Pipe

Model	8A24	8A30	8A36	8A42	8A48	8A60	8A72	8A84	8A96	8A108	8A120	8A132	8A144
Inside Width	24"	30"	36"	42"	48"	60"	72"	84"	96"	108"	120"	132"	144"
Wt. (lbs)	415	505	591	677	763	935	1107	1279	1451	1623	1795	1966	2138

NOTE: ALL SIZES OF "A" SERIES SPREADER SETS CONSIST OF FOUR PIECES OF LOOSE PIPE.

10A Series Spreader Sets: for use on 6A - 10', and 8A - 8' & 10' high shields; includes 16 each 2" x 13" pins, 10" Schedule 80 Pipe

Model	10A24	10A30	10A36	10A42	10A48	10A60	10A72	10A84	10A96	10A108	10A120	10A132	10A144
Inside Width	24"	30"	36"	42"	48"	60"	72"	84"	96"	108"	120"	132"	144"
Wt. (lbs)	659	787	916	1044	1173	1430	1688	1945	2202	2460	2717	2974	3231

Specifications subject to change without notice. Products must be used in accordance with safe practices and applicable codes and regulations.

CERTIFICATE OF SUBSTANTIAL COMPLIANCE ON PLANS

I, Ronald R. Bohannan, of the firm of Tierra West LLC, a Registered Professional Engineer in the State of New Mexico, do hereby certify, to the best of my knowledge and belief, that the infrastructure installed as part of this project has been inspected by me or by a qualified person under my direct supervision and has been constructed in accordance with the plans and specifications approved by the City Engineer and that the original design intent of the approved plans has been met, except as noted by me on the as-built construction drawings. This Certification is based on site inspections by me, or personnel under my direction with survey information provided by Ross P. Hugg, of Surv-Tek, NMPS number 9750

Engineer's Seal & Signature

7/24/03

AS BUILT INFORMATION

CONTRACTOR	CGM, INC.	2003
WORK STAKED BY	SURV-TEK	DATE 20023
INSPECTOR'S ACCEPTANCE BY	CO/ATW	DATE 20023
VERIFICATION BY	CO/ATW	DATE 200308
CORRECTED BY	TERRA WEST	DATE 2003

MICRO–FILM INFORMATION

RECORDED BY	DATE
NO.	

BENCH MARKS

ACS MONUMENT "NM45–4A"

CENTRAL STATION DATA –

NM STATE PLANE COORDINATES

Central Zone (NAD 1927)

X=365,159.45

Y=1,480,226.55

G–G=0.9996815

Da=–00°15'32"

EL.=5002.981 (SLD 1929)

SURVEY INFORMATION

FIELD NOTES

NO.	DATE	BY

ENGINEER'S SEAL

RONALD R. BOHANNAN NEW MEXICO PROFESSIONAL ENGINEER 10128

NO.	DATE	REMARKS	BY
		REVISIONS	

DESIGN

DESIGNED BY	JDN	DATE 08–02
DRAWN BY	JDN	DATE 08–21–02
DRAWN NAME:	21117MUDRC.DWG	
CHECKED BY	RRB	DATE 08–02

TIERRA WEST, LLC
8509 JEFFERSON NE
ALBUQUERQUE, NEW MEXICO 87113
(505)858–3100

CITY OF ALBUQUERQUE
PUBLIC WORKS DEPARTMENT
ENGINEERING GROUP

TITLE:

VISTA PACIFICA SUBDIVISION

MASTER UTILITY PLAN DETAIL SHEET

DESIGN REVIEW COMMITTEE	CITY ENGINEER APPROVAL	LAST DESIGN UPDATE	MO./DAY/YR.	MO./DAY/YR.
DESIGN REVIEW COMMITTEE	APPROVED JAN 10 CITY ENGINEER			

CITY PROJECT NO.	ZONE MAP NO.	SHEET
695081	K–11–Z	15A OF 25

CERTIFICATE OF SUBSTANTIAL COMPLIANCE ON PLANS

I, Ronald R. Bohannan, of the firm of Tierra West LLC, a Registered Professional Engineer in the State of New Mexico, do hereby certify, to the best of my knowledge and belief, that the infrastructure installed as part of this project has been inspected by me or by a qualified person under my direct supervision and has been constructed in accordance with the plans and specifications approved by the City Engineer and that the original design intent of the approved plans has been met, except as noted by me on the as-built construction drawings. This Certification is based on site inspections by me, or personnel under my direction with survey information provided by Russ P. Hugg, of Surv-Tek, NMPS number 9750.

Engineer's Seal & Signature

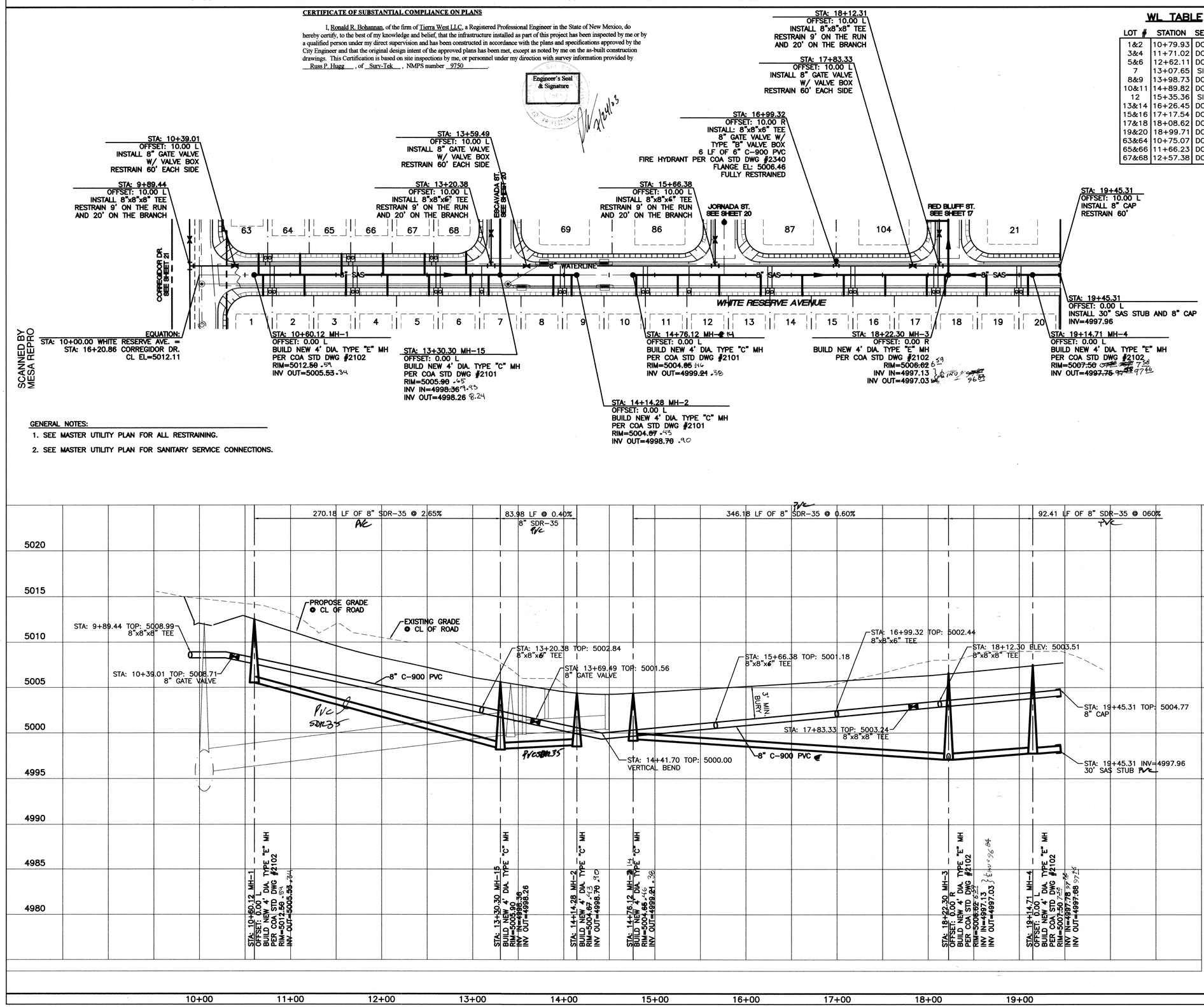

WL TABLE

LOT #	STATION	SERVICE
1&2	10+79.93	DOUBLE
3&4	11+71.02	DOUBLE
5&6	12+62.11	DOUBLE
7	13+07.65	SINGLE
8&9	13+98.73	DOUBLE
10&11	14+89.82	DOUBLE
12	15+35.36	SINGLE
13&14	16+26.45	DOUBLE
15&16	17+17.54	DOUBLE
17&18	18+08.62	DOUBLE
19&20	18+99.71	DOUBLE
63&64	10+75.07	DOUBLE
65&66	11+66.23	DOUBLE
67&68	12+57.38	DOUBLE

SAS TABLE

LOT #	STATION*	LF	INV.*	ELEV. @ PL
1	10+69.93	23	5007.10	5012.10
2	11+15.47	23	5005.60	5010.60
3	11+61.01	23	5004.23	5009.23
4	12+06.55	23	5003.20	5008.20
5	12+52.09	23	5002.20	5007.20
6	12+97.63	23	5001.22	5006.22
7	13+17.65	23	5000.55	5005.55
8	13+88.74	23	4999.58	5004.58
9	14+08.74	23	4999.00	5004.00
10	14+79.79	23	4999.03	5004.03
11	15+25.33	23	4999.45	5004.45
12	15+70.87	23	4999.90	5004.90
13	16+16.41	23	5000.33	5005.33
14	16+61.95	23	5000.38	5005.38
15	17+07.49	23	5000.82	5005.82
16	17+53.03	23	5001.25	5006.25
17	17+98.62	23	5001.68	5006.68
18	18+18.62	23	5001.72	5006.72
19	18+64.17	23	5002.15	5007.15
20	19+09.71	23	5002.60	5007.60
63	10+65.07	23	5007.25	5012.25
64	11+10.65	23	5007.82	5010.82
65	11+56.23	23	5004.38	5009.38
66	12+01.80	23	5003.30	5008.30
67	12+47.38	23	5002.30	5007.30
68	12+92.93	26	5001.75	5006.75

* @ END OF SERVICE LINE

AS BUILT INFORMATION

CONTRACTOR	CGM, INC.	2003
WORK INSPECTORS	SURV-TEK	DATE 20023
ACCEPTANCE BY	CGA/TW	DATE 20023
FIELD VERIFICATION BY	CGA/TW	DATE 2002/05
DRAWINGS BY	TIERRA WEST	DATE 2003

MICRO-FILM INFORMATION

RECORDED BY	
DATE	
NO.	

BENCH MARKS

ACS MONUMENT "NM45-4A"
CENTRAL STATION DATA SOUTH OF BRIDGE BETWEEN SOUTH COORS AND UNSER RD.
NM STATE PLANE COORDINATES
Central Zone (NAD 1927)
X=365,169.46
Y=1,480,226.55
G-G=0.9996815
Dg=-00°15'32"
EL.=5002.981 (SLD 1929)

SURVEY INFORMATION

FIELD NOTES

NO.	BY	DATE

ENGINEER'S SEAL

REVISIONS

NO.	DATE	REMARKS	BY

DESIGN		
DESIGNED BY	JDN	DATE 08-02
DRAWN BY	JDN	DATE 09-10-02
DRAWN NAME:	WHITEUTPP.DWG	21117
CHECKED BY	RRB	DATE 08-02

TIERRA WEST, LLC
8509 JEFFERSON NE
ALBUQUERQUE, NEW MEXICO 87113
(505)858-3100

CITY OF ALBUQUERQUE
PUBLIC WORKS DEPARTMENT
ENGINEERING GROUP

TITLE: **VISTA PACIFICA SUBDIVISION**
UTILITY IMPROVEMENTS
WHITE RESERVE AVE. STA: 10+00.00 TO STA: 19+45.28

DESIGN REVIEW COMMITTEE — APPROVED — DESIGN REVIEW COMMITTEE

CITY ENGINEER APPROVAL — APPROVED JAN 10 — CITY ENGINEER

LAST DESIGN UPDATE | MO./DAY/YR. | MO./DAY/YR.

CITY PROJECT NO. 695081 | ZONE MAP NO. K-11-Z | SHEET 16 OF 25

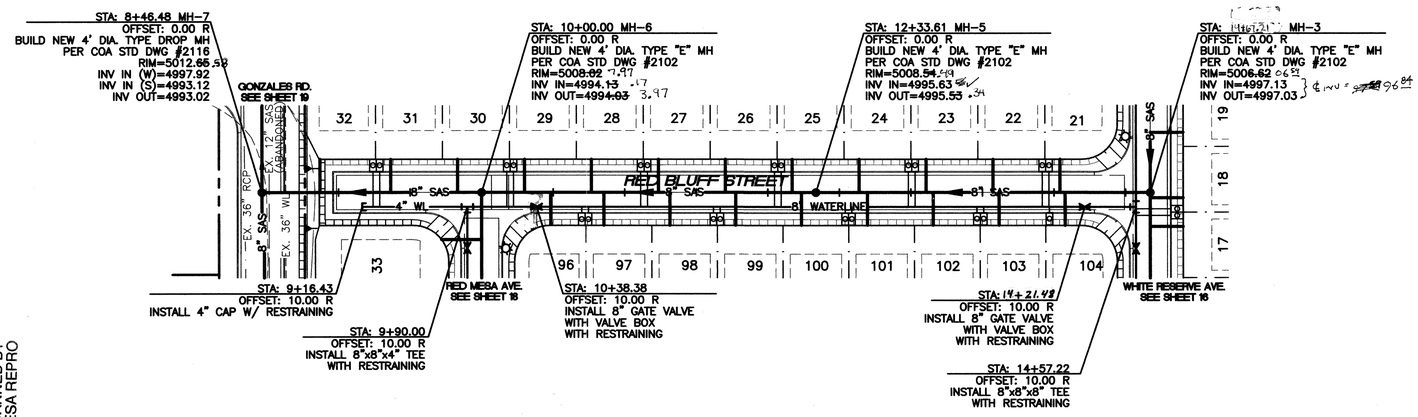

SCANNED BY
MESA REPRO

WL TABLE

LOT #	STATION	SERVICE
21&22	13+94.15	DOUBLE
23&24	13+00.61	DOUBLE
25&26	12+07.06	DOUBLE
27&28	11+13.52	DOUBLE
29&30	10+19.88	DOUBLE
31&32	9+26.43	DOUBLE
96&97	10+72.28	DOUBLE
98&99	11+64.34	DOUBLE
100&101	12+56.40	DOUBLE
102&103	13+48.53	DOUBLE
104	13+94.49	SINGLE

SAS TABLE

LOT #	STATION*	LF	INV.*	ELEV. @ PL
21	14+04.15	23	5002.50	5007.50
22	13+57.38	23	5002.87	5007.87
23	13+10.61	23	5003.24	5008.24
24	12+63.84	23	5003.61	5008.61
25	12+17.06	23	5003.97	5008.97
26	11+70.29	23	5004.34	5009.34
27	11+23.52	23	5004.62	5009.62
28	10+76.75	23	5003.88	5008.88
29	10+29.98	23	5003.14	5008.14
30	9+83.21	23	5003.90	5008.90
31	9+36.43	23	5004.27	5009.27
32	8+87.07	23	5004.61	5009.61
96	10+58.47	26	5003.57	5008.57
97	10+85.45	23	5003.97	5008.97
98	11+31.53	23	5004.71	5009.71
99	11+77.56	23	5004.34	5009.34
100	12+23.59	23	5003.97	5008.97
101	12+69.62	23	5003.61	5008.61
102	13+15.65	23	5003.24	5008.24
103	13+61.68	23	5002.87	5007.87
104	14+07.78	23	5002.50	5007.50

* @ END OF SERVICE LINE

Note: Laterals @ Lots 96-104, 21-29
Property Line Elevations
Dropped 2' (Typical)

GENERAL NOTES:

1. SEE MASTER UTILITY PLAN FOR ALL RESTRAINING.
2. SEE MASTER UTILITY PLAN FOR SANITARY SERVICE CONNECTIONS.

CERTIFICATE OF SUBSTANTIAL COMPLIANCE ON PLANS

I, Ronald R. Bohannan, of the firm of Tierra West LLC, a Registered Professional Engineer in the State of New Mexico, do hereby certify, to the best of my knowledge and belief, that the infrastructure installed as part of this project has been inspected by me or by a qualified person under my direct supervision and has been constructed in accordance with the plans and specifications approved by the City Engineer and that the original design intent of the approved plans has been met, except as noted by me on the as-built construction drawings. This Certification is based on site inspections by me, or personnel under my direction with survey information provided by Russ P. Hugg, of Surv-Tek, NMPS number 9750.

Engineer's Seal & Signature

7/24/03

SCALE: HORIZ. 1"=50'
VERT. 1"=5'

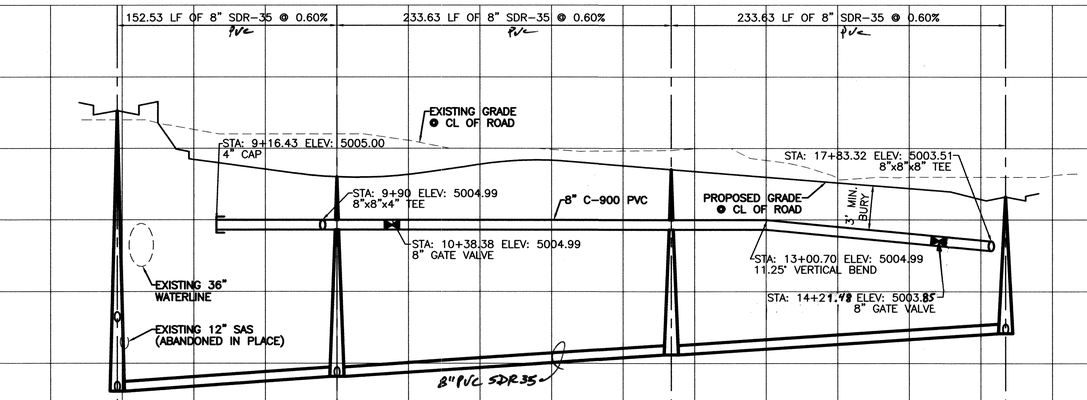

AS BUILT INFORMATION

CONTRACTOR	CORE INC.	2003
WORK STAKED BY	SURV-TEK	DATE 20023
INSPECTOR'S ACCEPTANCE BY	COA/TW	DATE 20023
VERIFICATION BY	COA/TW	DATE 2003/03
CORRECTED BY	TIERRA WEST	DATE 2003

MICRO-FILM INFORMATION

RECORDED BY	DATE
NO.	

BENCH MARKS

ACS MONUMENT "NM45-4A"
CENTRAL STATION DATA SOUTH OF BRIDGE BETWEEN SOUTH COORS AND UNIVERSITY BLVD.
NM STATE PLANE COORDINATES
Central Zone (NAD 1927)
X=385,169.46
Y=1,480,226.55
G-G=0.9996815
Dg=-00°15'32"
EL.=5002.981 (SLD 1929)

SURVEY INFORMATION

FIELD NOTES

NO.	BY	DATE

ENGINEER'S SEAL

NO.	DATE	REMARKS	BY

REVISIONS

DESIGN	
DESIGNED BY	JDN DATE 08-02
DRAWN BY	JDN DATE 10/08/02
DRAWN NAME:	REDBLUTPP.DWG 21117
CHECKED BY	RRB DATE 08-02

TIERRA WEST, LLC
8509 JEFFERSON NE
ALBUQUERQUE, NEW MEXICO 87113
(505)858-3100

CITY OF ALBUQUERQUE
PUBLIC WORKS DEPARTMENT
ENGINEERING GROUP

TITLE: **VISTA PACIFICA SUBDIVISION**
UTILITY IMPROVEMENTS
RED BLUFF ST. STA: 10+00.00 TO STA: 14+67.21

DESIGN REVIEW COMMITTEE — APPROVED — DESIGN REVIEW COMMITTEE

CITY ENGINEER APPROVAL — APPROVED JAN 10 — CITY ENGINEER

LAST DESIGN UPDATE	MO./DAY/YR.	MO./DAY/YR.

CITY PROJECT NO. 695081 | ZONE MAP NO. K-11-Z | SHEET 17 OF 25

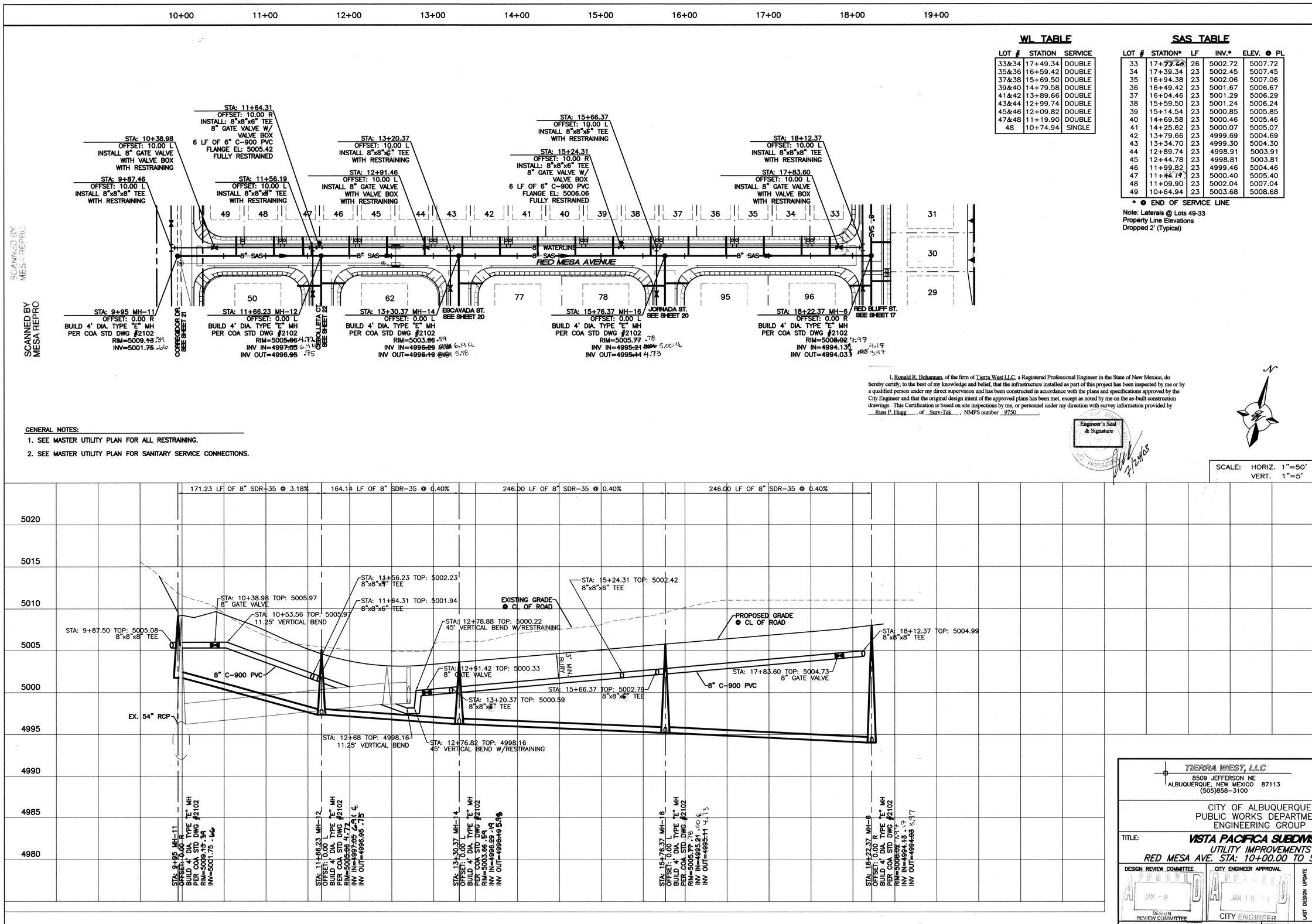

WL TABLE

LOT #	STATION	SERVICE
33&34	17+49.34	DOUBLE
35&36	16+59.42	DOUBLE
37&38	15+69.50	DOUBLE
39&40	14+79.58	DOUBLE
41&42	13+89.66	DOUBLE
43&44	12+99.74	DOUBLE
45&46	12+09.82	DOUBLE
47&48	11+19.90	DOUBLE
48	10+74.94	SINGLE

SAS TABLE

LOT #	STATION*	LF	INV.*	ELEV. @ PL
33	17+73.60	26	5002.72	5007.72
34	17+39.34	23	5002.45	5007.45
35	16+94.38	23	5002.06	5007.06
36	16+49.42	23	5001.67	5006.67
37	16+04.46	23	5001.29	5006.29
38	15+59.50	23	5001.24	5006.24
39	15+14.54	23	5000.85	5005.85
40	14+69.58	23	5000.46	5005.46
41	14+25.62	23	5000.07	5005.07
42	13+79.66	23	4999.69	5004.69
43	13+34.70	23	4999.30	5004.30
44	12+89.74	23	4998.91	5003.91
45	12+44.78	23	4998.81	5003.81
46	11+99.82	23	4999.46	5004.46
47	11+46.19	23	5000.40	5005.40
48	11+09.90	23	5002.04	5007.04
49	10+64.94	23	5003.68	5008.68

* @ END OF SERVICE LINE

Note: Laterals @ Lots 49-33
Property Line Elevations
Dropped 2' (Typical)

I, Ronald R. Bohannan, of the firm of Tierra West LLC, a Registered Professional Engineer in the State of New Mexico, do hereby certify, to the best of my knowledge and belief, that the infrastructure installed as part of this project has been inspected by me or by a qualified person under my direct supervision and has been constructed in accordance with the plans and specifications approved by the City Engineer and that the original design intent of the approved plans has been met, except as noted by me on the as-built construction drawings. This Certification is based on site inspections by me, or personnel under my direction with survey information provided by Russ P. Hugg, of Surv-Tek, NMPS number 9750.

Engineer's Seal & Signature

SCALE: HORIZ. 1"=50'
VERT. 1"=5'

GENERAL NOTES:

1. SEE MASTER UTILITY PLAN FOR ALL RESTRAINING.
2. SEE MASTER UTILITY PLAN FOR SANITARY SERVICE CONNECTIONS.

AS BUILT INFORMATION

CONTRACTOR	CAL INC.	2003	
SURV-TEK	DATE	20023	
WORK BY			
INSPECTOR'S FIELD TAKE BY	CCA/TW	DATE	2002/03
VERIFICATION BY	CCA/TW	DATE	2002/03
TIERRA WEST	DATE	2003	
CORRECTED BY			

MICRO-FILM INFORMATION

RECORDED BY	
DATE	
NO.	

BENCH MARKS

ACS MONUMENT "NM45-4A"
CENTRAL STATION DATA SOUTH OF BRIDGE BETWEEN SOUTH COORS AND ROAD
NM STATE PLANE COORDINATES
Central Zone (NAD 1927)
X=365,169.46
Y=1,490,226.55
G-G=0.9996815
Da=-00°15'32"
EL.=5002.981 (SLD 1929)

SURVEY INFORMATION

FIELD NOTES

NO.	BY	DATE

ENGINEER'S SEAL

REGISTERED RONALD RAY BOHANNAN NEW MEXICO 9750 PROFESSIONAL ENGINEER
10/28/02

NO.	DATE	REMARKS	BY
		REVISIONS	

DESIGN

DESIGNED BY	JDN	DATE 08-02
DRAWN BY	JDN	DATE 10/09/02
DRAWN NAME:	REDMESAUTP.DWG	21117
CHECKED BY	RRB	DATE 08-02

TIERRA WEST, LLC
8509 JEFFERSON NE
ALBUQUERQUE, NEW MEXICO 87113
(505)858-3100

CITY OF ALBUQUERQUE
PUBLIC WORKS DEPARTMENT
ENGINEERING GROUP

TITLE: **VISTA PACIFICA SUBDIVISION**
UTILITY IMPROVEMENTS
RED MESA AVE. STA: 10+00.00 TO STA: 18+22.37

DESIGN REVIEW COMMITTEE	CITY ENGINEER APPROVAL	LAST DESIGN UPDATE	MO./DAY/YR.	MO./DAY/YR.
APPROVED JAN - 8 DESIGN REVIEW COMMITTEE	APPROVED JAN 10 2003 CITY ENGINEER			

CITY PROJECT NO.	ZONE MAP NO.	SHEET
695081	K-11-Z	18 OF 25

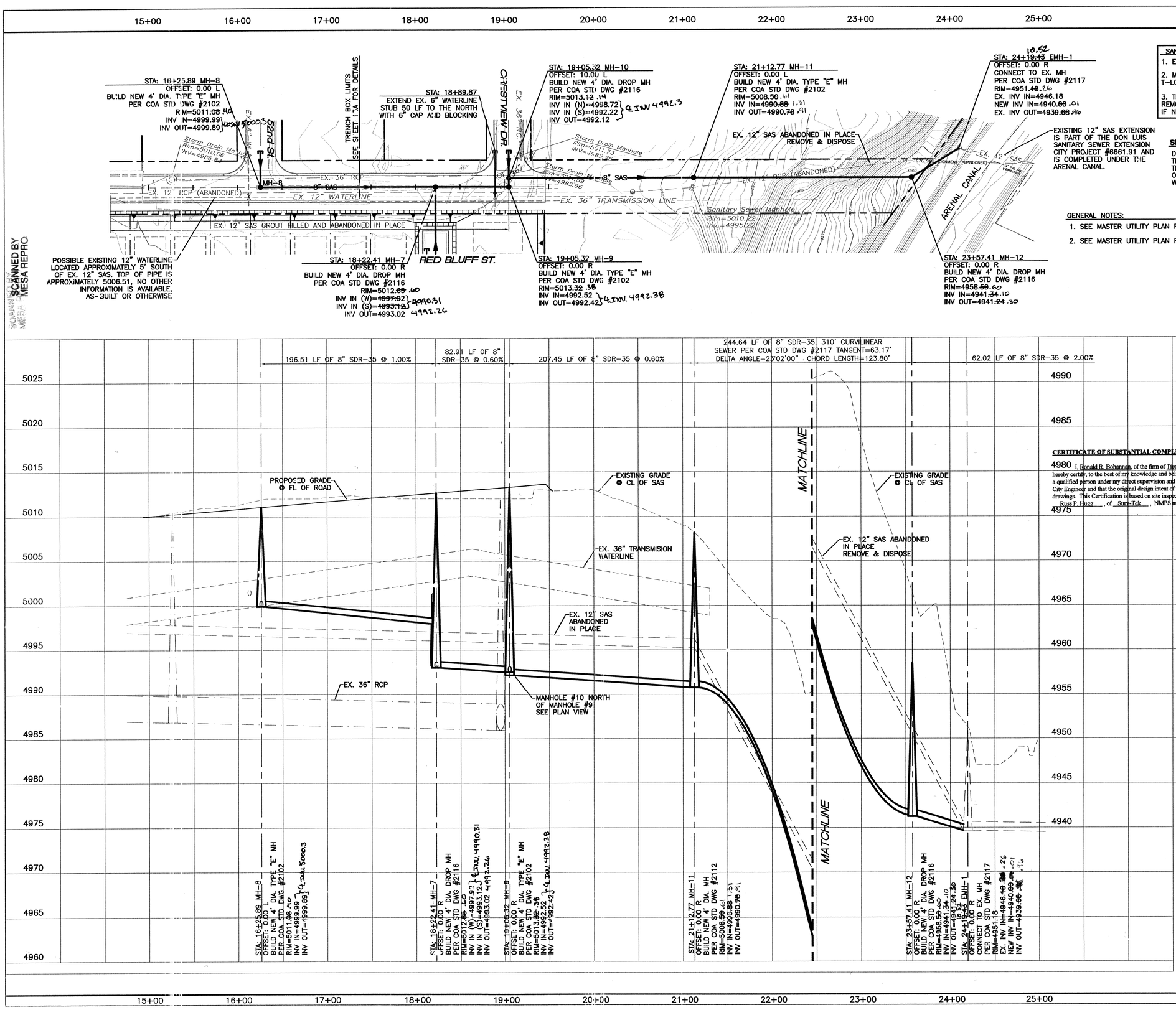

SANITARY SEWER SPECIAL INSTRUCTIONS

1. EMH-1 WAS REMOVED AND REPLACED.
2. MH-~~16~~ 18 & 11 MUST BE FITTED WITH A T-LOCK SYSTEM TO PREVENT CORROSION.
3. THE EX. 12" SAS LINE IS TO BE EITHER REMOVED & DISPOSED OR GROUT FILLED IF NOT ALREADY.

SPECIAL NOTE:

DO TO THE DEPTH OF THE PROPOSED SANITARY SEWER LINE, TRENCH BOXES WILL HAVE TO BE USED FOR CONSTRUCTION. THE CONTRACTOR SHALL SECURELY FENCE OFF THE ENTIRE OPEN EXCAVATION AREA AT THE END OF EACH WORK SHIFT WITH A SIX FOOT TALL CHAIN LINK FENCE.

GENERAL NOTES:

1. SEE MASTER UTILITY PLAN FOR ALL RESTRAINING.
2. SEE MASTER UTILITY PLAN FOR SANITARY SERVICE CONNECTIONS.

SCALE: HORIZ. 1"=50'
VERT. 1"=5'

CERTIFICATE OF SUBSTANTIAL COMPLIANCE ON PLANS

I, Ronald R. Bohannan, of the firm of Tierra West LLC, a Registered Professional Engineer in the State of New Mexico, do hereby certify, to the best of my knowledge and belief, that the infrastructure installed as part of this project has been inspected by me or by a qualified person under my direct supervision and has been constructed in accordance with the plans and specifications approved by the City Engineer and that the original design intent of the approved plans has been met, except as noted by me on the as-built construction drawings. This Certification is based on site inspections by me, or personnel under my direction with survey information provided by Russ P. Hugg, of Surv-Tek, NMPS number 9750.

Engineer's Seal & Signature

7/17/03

SCANNED BY MESA REPRO

AS BUILT INFORMATION

CONTRACTOR CCITI

WORK STAKED BY Surv-Tek DATE 2003

INSPECTOR'S ACCEPTANCE BY TIERRA WEST DATE 2003

VERIFICATION BY CITY DATE 2003

FIELD NOTES BY CITY DATE 2003

CORRECTED BY CITY DATE 2003

MICRO-FILM INFORMATION

RECORDED BY DATE

NO.

BENCH MARKS

ACS MONUMENT "NM45-4A"
CENTRAL STATION DATA SOUTH OF BRIDGE BETWEEN SOUTH COORS AND 98th ST.
NM STATE PLANE COORDINATES
Central Zone (NAD 1927)
X=365,169.46
Y=1,480,226.55
G-G=0.9996815
Dg=-00°15'32"
EL.=5002.981 (SLD 1929)

SURVEY INFORMATION

FIELD NOTES

NO.	DATE	BY

ENGINEER'S SEAL

NO.	DATE	REMARKS	BY
		REVISIONS	

DESIGN

DESIGNED BY	JDN	DATE 08-02
DRAWN BY	JDN	DATE 07-24-03
DRAWN NAME	GONZUTPP.DWG	21117
CHECKED BY	RRB	DATE 08-02

TIERRA WEST, LLC
8509 JEFFERSON NE
ALBUQUERQUE, NEW MEXICO 87113
(505)858-3100

CITY OF ALBUQUERQUE
PUBLIC WORKS DEPARTMENT
ENGINEERING GROUP

TITLE: **VISTA PACIFICA SUBDIVISION**
UTILITY IMPROVEMENTS
GONZALES ROAD STA: 10+00.00 TO STA: 19+46.18

DESIGN REVIEW COMMITTEE	CITY ENGINEER APPROVAL	LAST DESIGN UPDATE	MO./DA./YR.	MO./DAY/YR.

CITY PROJECT NO.	ZONE MAP NO.	SHEET
695081	K-11-Z	19 OF 25

SCANNED BY MESA REPRO

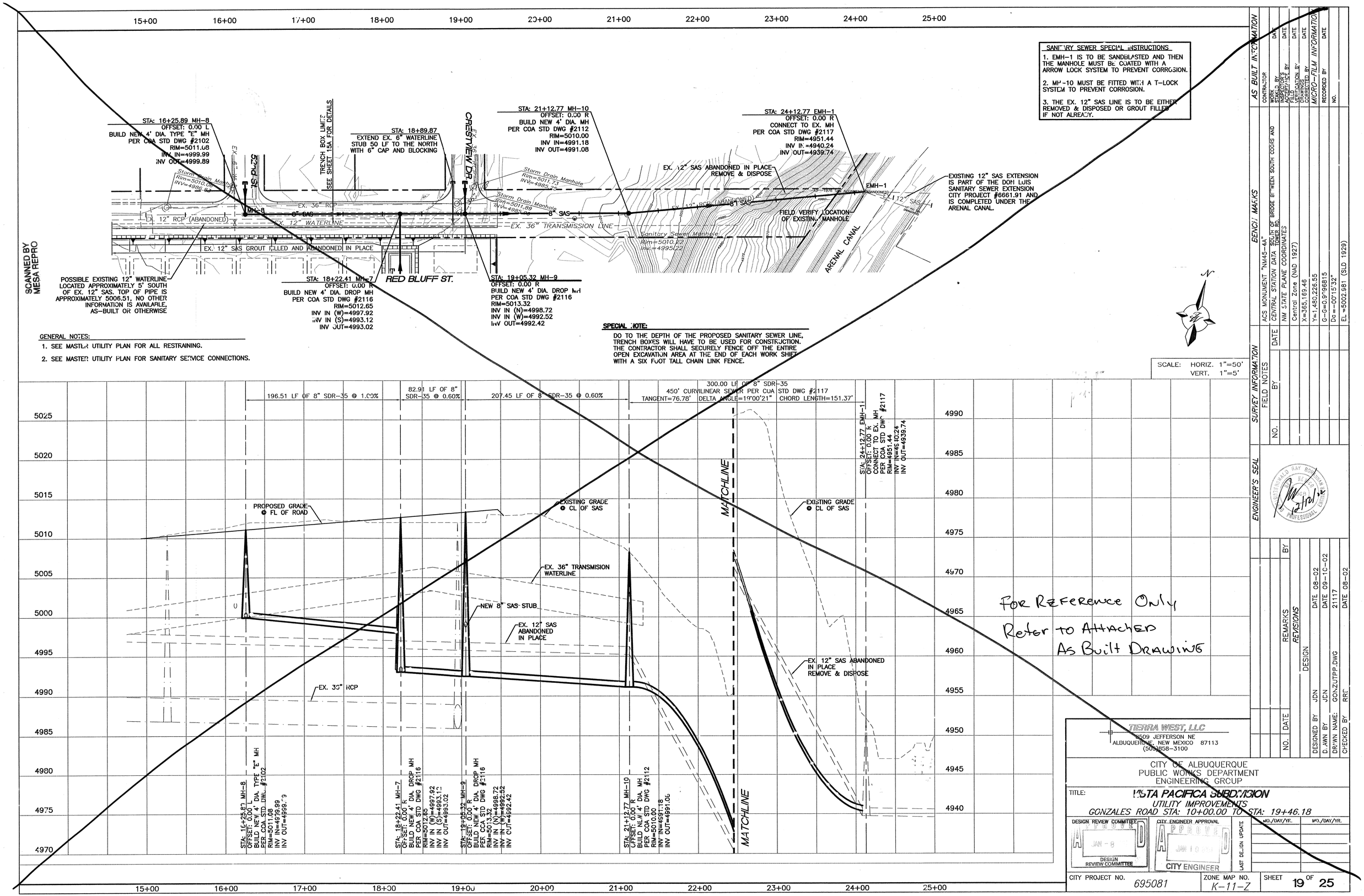

AS BUILT INFORMATION

CONTRACTOR		
WORK STAKED BY		DATE
INSPECTOR'S ACCEPTANCE BY		DATE
FIELD VERIFICATION BY		DATE
DRAWINGS CORRECTED BY		DATE

MICRO-FILM INFORMATION

RECORDED BY	
DATE	
NO.	

BENCH MARKS

ACS MONUMENT "NM45-44"
CENTRAL STATION DATA SOUTH OF BRIDGE BETWEEN SOUTH COURTS AND TOWER RD.
NM STATE PLANE COORDINATES
Central Zone (NAD 1927)
X=365,169.46
Y=1,480,226.55
G-G=0.9996815
Da=-00°15'32"
EL=5002.981 (SLD 1929)

SURVEY INFORMATION

FIELD NOTES

NO.	BY	DATE

ENGINEER'S SEAL

REGINALD RAY BOWMAN NEW MEXICO 12121 PROFESSIONAL ENGINEER
12/21/11

NO.	DATE	REMARKS	BY

REVISIONS

DESIGN	
DESIGNED BY	JDN DATE 08-02
DRAWN BY	JDN DATE 09-10-02
DRAWN NAME:	GONZUTPP.DWG 21117
CHECKED BY	RRF DATE 08-02

TIERRA WEST, LLC
8509 JEFFERSON NE
ALBUQUERQUE, NEW MEXICO 87113
(505)858-3100

CITY OF ALBUQUERQUE
PUBLIC WORKS DEPARTMENT
ENGINEERING GROUP

TITLE: VISTA PACIFICA SUBDIVISION
UTILITY IMPROVEMENTS
GONZALES ROAD STA: 10+00.00 TO STA: 19+46.18

DESIGN REVIEW COMMITTEE	CITY ENGINEER APPROVAL	LAST DESIGN UPDATE	MO./DAY/YR.	MO./DAY/YR.
APPROVED JAN - 8 DESIGN REVIEW COMMITTEE	APPROVED JAN 10 CITY ENGINEER			

CITY PROJECT NO.	ZONE MAP NO.	SHEET
695081	K-11-Z	19 OF 25

CERTIFICATE OF SUBSTANTIAL COMPLIANCE ON PLANS

I, Ronald R. Bohannan, of the firm of Tierra West LLC, a Registered Professional Engineer in the State of New Mexico, do hereby certify, to the best of my knowledge and belief, that the infrastructure installed as part of this project has been inspected by me or by a qualified person under my direct supervision and has been constructed in accordance with the plans and specifications approved by the City Engineer and that the original design intent of the approved plans has been met, except as noted by me on the as-built construction drawings. This Certification is based on site inspections by me, or personnel under my direction with survey information provided by Russ P. Hugg, of Surv-Tek, NMPS number 9750.

Engineer's Seal & Signature

WL TABLE

LOT #	STATION	SERVICE
78&79	10+78.10	DOUBLE
80&81	11+64.87	DOUBLE
82&83	12+56.69	DOUBLE
84&85	13+48.51	DOUBLE
86	13+94.34	SINGLE
87&88	13+94.48	DOUBLE
89&90	13+02.60	DOUBLE
91&92	12+10.78	DOUBLE
93&94	11+18.97	DOUBLE
95	10+73.01	SINGLE

SAS TABLE

LOT #	STATION*	LF	INV.*	ELEV. @ PL
78	10+36.04	26	5001.65	5006.65
79	10+86.02	23	5001.87	5006.87
80	11+32.10	23	5002.33	5007.33
81	11+78.13	23	5001.89	5006.89
82	12+24.16	23	5001.54	5006.54
83	12+70.16	23	5001.19	5006.19
84	13+16.22	23	5000.84	5005.84
85	13+62.25	23	5000.49	5005.49
86	14+07.48	23	5000.15	5005.15
87	14+04.48	23	5000.15	5005.15
88	13+59.25	23	5000.49	5005.49
89	13+13.22	23	5000.84	5005.84
90	12+67.19	23	5001.19	5006.19
91	12+21.16	23	5001.54	5006.54
92	11+75.13	23	5001.89	5006.89
93	11+29.10	23	5002.33	5007.33
94	10+83.02	23	5001.87	5006.87
95	10+33.04	28	5001.65	5006.65

* @ END OF SERVICE LINE

Note: Laterals @ Lots 87-95, 78-86
Property Line Elevations
Dropped 2' (Typical)

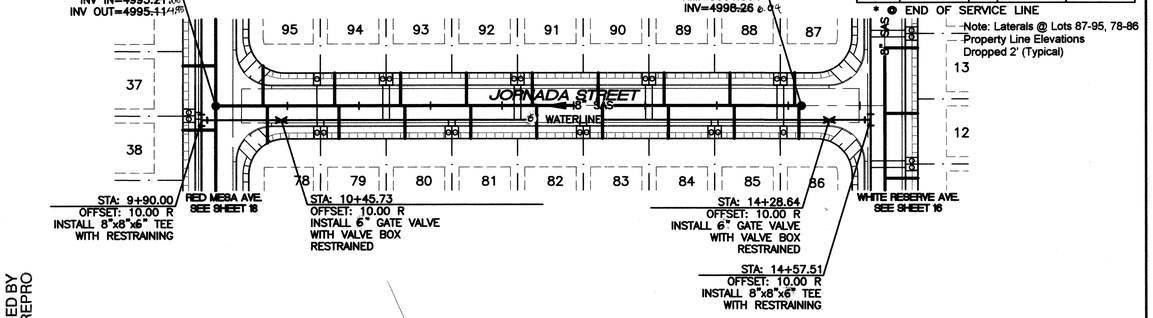

SCANNED BY MESA REPRO

GENERAL NOTES:

1. SEE MASTER UTILITY PLAN FOR ALL RESTRAINING.
2. SEE MASTER UTILITY PLAN FOR SANITARY SERVICE CONNECTIONS.

SCALE: HORIZ. 1"=50'
VERT. 1"=5'

WL TABLE

LOT #	STATION	SERVICE
69&70	13+94.60	DOUBLE
71&72	13+02.71	DOUBLE
73&74	12+10.90	DOUBLE
75&76	11+19.08	DOUBLE
77	10+73.13	SINGLE

SAS TABLE

LOT #	STATION*	LF	INV.*	ELEV. @ PL
69	14+04.60	23	5001.74	5006.74
70	13+59.24	23	5002.10	5007.10
71	13+31.21	23	5002.47	5007.47
72	12+67.18	23	5002.84	5007.84
73	12+21.15	23	5002.70	5007.70
74	11+75.12	23	5001.86	5006.86
75	11+29.02	23	5006.02	5006.02
76	10+83.02	23	5000.19	5005.19
77	10+33.03	28	4999.75	5004.75

* @ END OF SERVICE LINE

Note: Laterals @ Lots 69-77
Property Line Elevations
Dropped 2' (Typical)

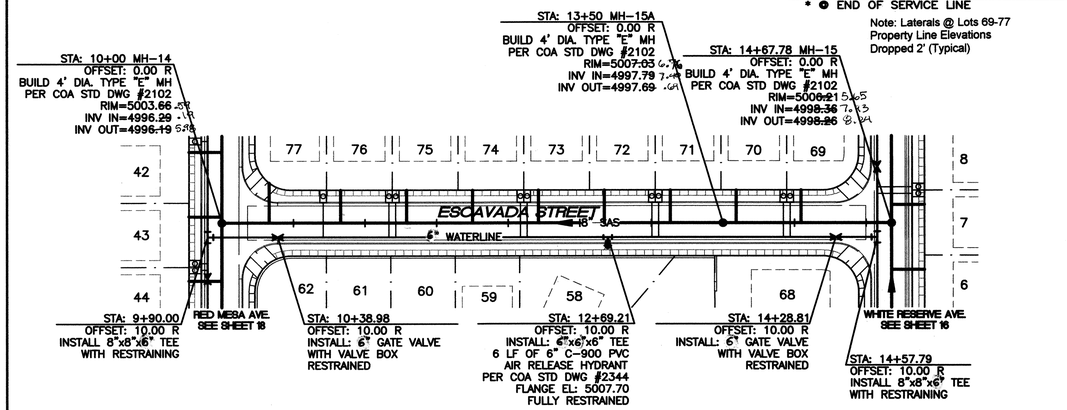

GENERAL NOTES:

1. SEE MASTER UTILITY PLAN FOR ALL RESTRAINING.
2. SEE MASTER UTILITY PLAN FOR SANITARY SERVICE CONNECTIONS.

SCALE: HORIZ. 1"=50'
VERT. 1"=5'

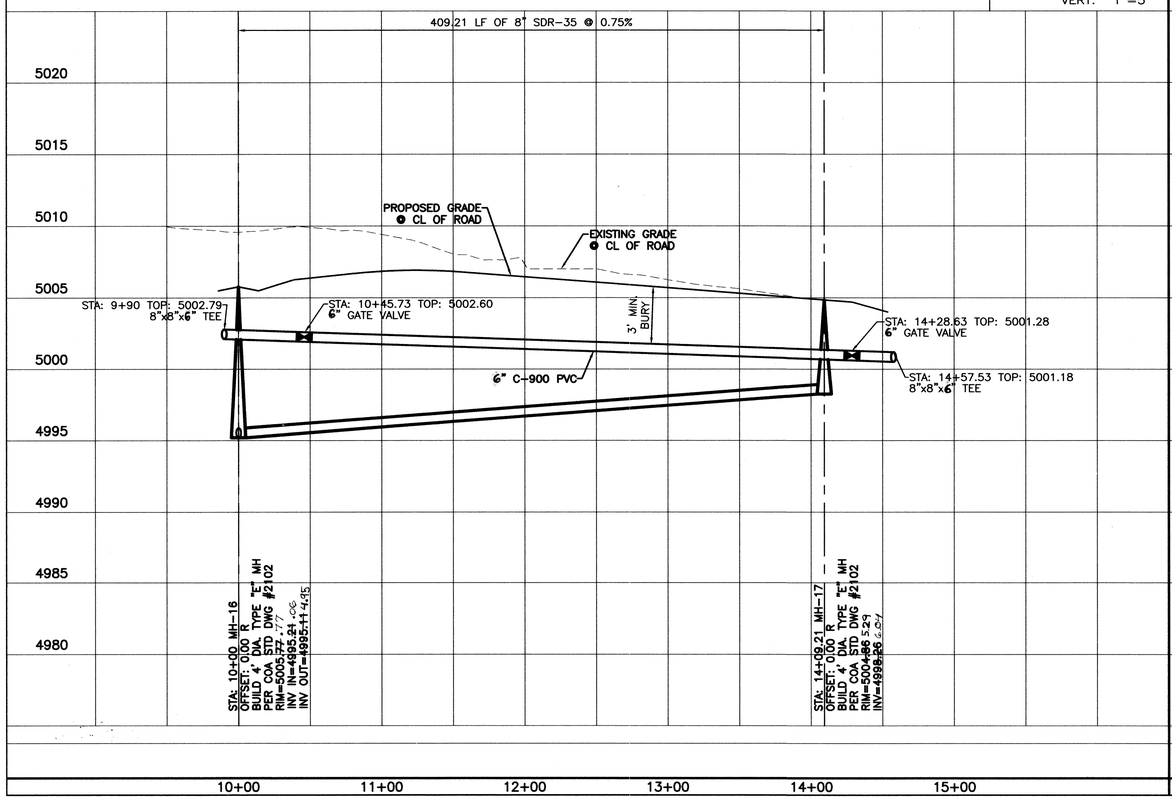

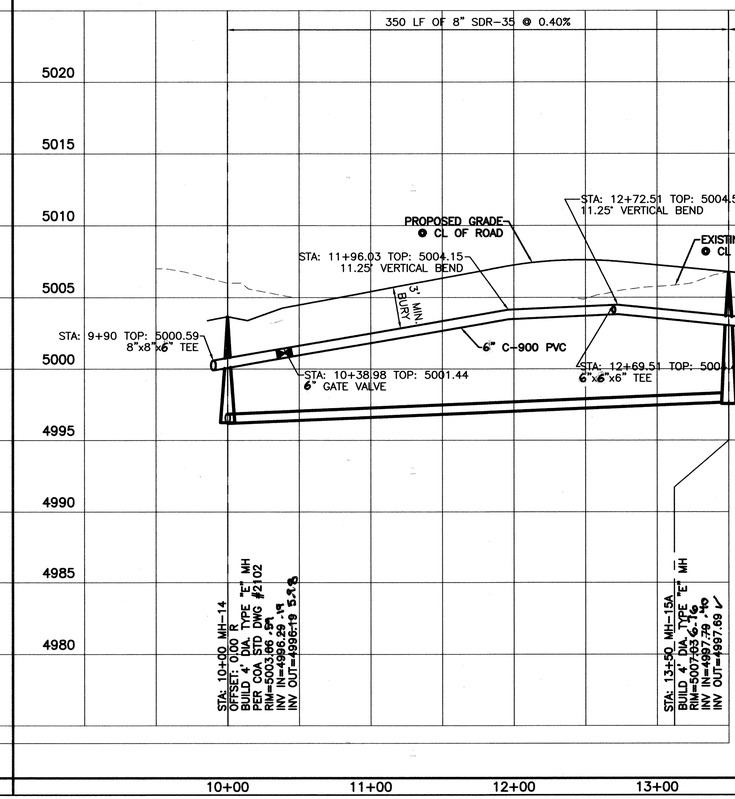

AS BUILT INFORMATION

CONTRACTOR	SURV-TEK DATE 20023
CON. NO.	WORK ORDER NO.
INSPECTOR'S ACCEPTANCE BY	CO-NTW DATE 20023
VERIFICATION BY	CO-NTW DATE 2002003
CORRECTED BY	TIERRA WEST DATE 2003

MICRO-FILM INFORMATION

RECORDED BY	DATE
NO.	

BENCH MARKS

ACS MONUMENT "NM45-4A"
CENTRAL STATION DATA SOUTH OF BRIDGE BETWEEN SOUTH COORS AND UNIVERSITY BLVD.
NM STATE PLANE COORDINATES
Central Zone (NAD 1927)
X=365,169.46
Y=1,480,226.55
G-G=0.9996815
Da=-00°15'32"
EL.=5002.981 (SLD 1929)

SURVEY INFORMATION

FIELD NOTES

NO.	BY	DATE

ENGINEER'S SEAL

NO.	DATE	REMARKS	BY

REVISIONS

DESIGN		
DESIGNED BY	JDN	DATE 08-02
DRAWN BY	JDN	DATE 09-13-02
DRAWN NAME:	JORNAUTPP.DWG	21117
CHECKED BY	RRB	DATE 08-02

TIERRA WEST, LLC
8509 JEFFERSON NE
ALBUQUERQUE, NEW MEXICO 87113
(505)858-3100

CITY OF ALBUQUERQUE
PUBLIC WORKS DEPARTMENT
ENGINEERING GROUP

TITLE: **VISTA PACIFICA SUBDIVISION**
UTILITY IMPROVEMENTS
JORNADA ST. AND ESCAVADA ST.

DESIGN REVIEW COMMITTEE	CITY ENGINEER APPROVAL	LAST DESIGN UPDATE	MO./DAY/YR.	MO./DAY/YR.
APPROVED JAN - 8 DESIGN REVIEW COMMITTEE	APPROVED JAN 10 CITY ENGINEER			

CITY PROJECT NO.	ZONE MAP NO.	SHEET
695081	K-11-Z	20 OF 25

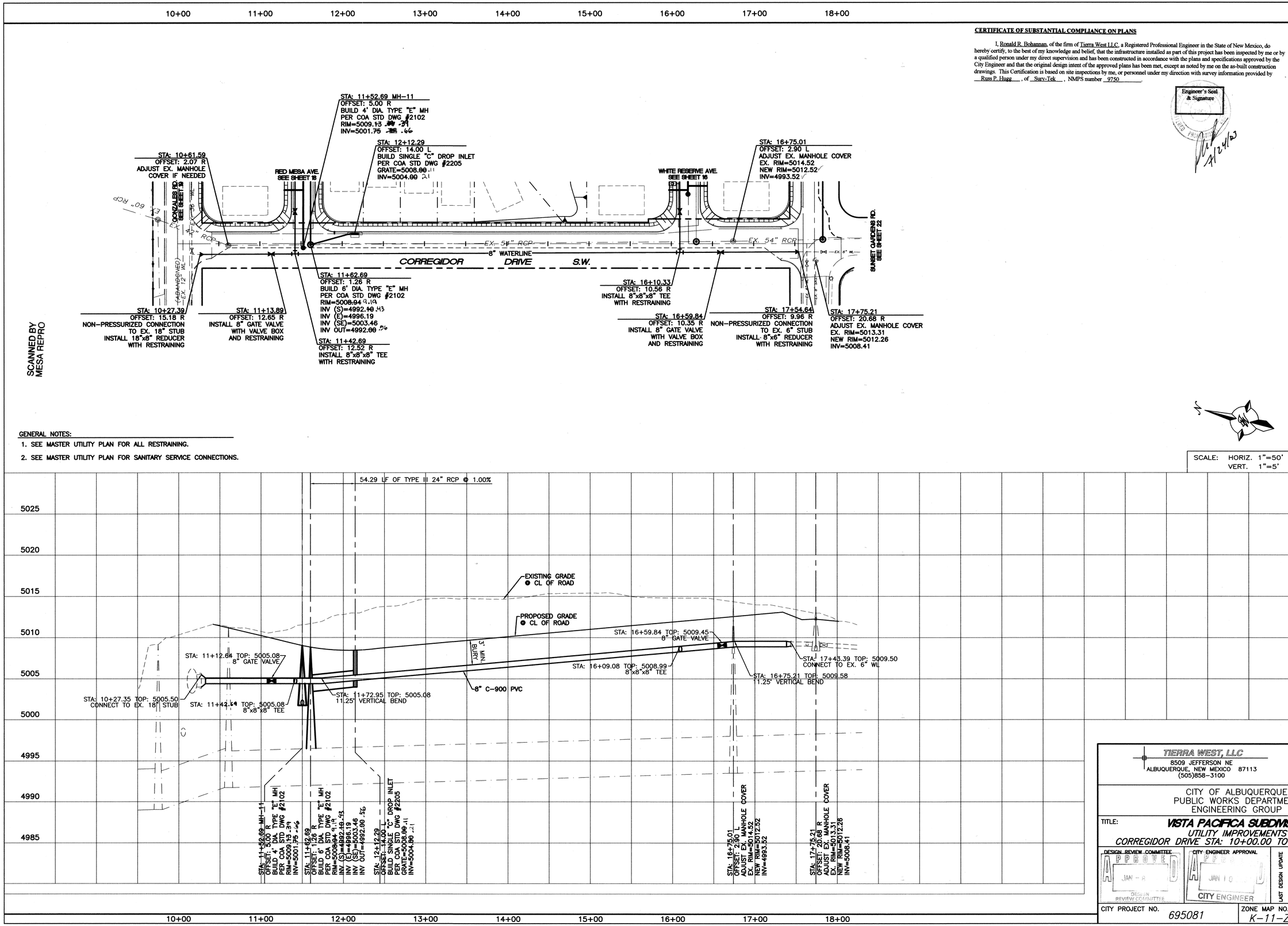

SCANNED BY
MESA REPRO

GENERAL NOTES:

1. SEE MASTER UTILITY PLAN FOR ALL RESTRAINING.
2. SEE MASTER UTILITY PLAN FOR SANITARY SERVICE CONNECTIONS.

SCALE: HORIZ. 1"=50'
VERT. 1"=5'

CERTIFICATE OF SUBSTANTIAL COMPLIANCE ON PLANS

I, Ronald R. Bohannan, of the firm of Tierra West LLC, a Registered Professional Engineer in the State of New Mexico, do hereby certify, to the best of my knowledge and belief, that the infrastructure installed as part of this project has been inspected by me or by a qualified person under my direct supervision and has been constructed in accordance with the plans and specifications approved by the City Engineer and that the original design intent of the approved plans has been met, except as noted by me on the as-built construction drawings. This Certification is based on site inspections by me, or personnel under my direction with survey information provided by Russ P. Hugg, of Surv-Tek, NMPS number 9750.

Engineer's Seal & Signature

9/24/02

AS BUILT INFORMATION

CONTRACTOR	CON. INC.	2003
WORK STAKED BY	SURV-TEK	DATE 20023
INSPECTOR'S ACCEPTANCE BY	COA/TW	DATE 2002/03
VERIFICATION BY	COA/TW	DATE 2002/03
CORRECTED BY	TIERRA WEST	DATE 2003

MICRO-FILM INFORMATION

RECORDED BY	DATE
NO.	

BENCH MARKS

ACS MONUMENT "NM45-4A"
CENTRAL STATION DATA SOUTH OF BRIDGE BETWEEN SOUTH COORS AND TOWER RD.
NM STATE PLANE COORDINATES
Central Zone (NAD 1927)
X=365,169.46
Y=1,480,226.55
G-G=0.9996815
Da=-00°15'32"
EL.=5002.981 (SLD 1929)

SURVEY INFORMATION

FIELD NOTES

NO.	BY	DATE

ENGINEER'S SEAL

REGISTERED PROFESSIONAL ENGINEER RONALD RAY BOHANNAN NEW MEXICO

NO.	DATE	REMARKS	BY

REVISIONS

DESIGN		
DESIGNED BY	JDN	DATE 08-02
DRAWN BY	JDN	DATE 10/09/02
DRAWN NAME:	CORRUTPP.DWG	21117
CHECKED BY	RRB	DATE 08-02

TIERRA WEST, LLC
8509 JEFFERSON NE
ALBUQUERQUE, NEW MEXICO 87113
(505)858-3100

CITY OF ALBUQUERQUE
PUBLIC WORKS DEPARTMENT
ENGINEERING GROUP

TITLE: **VISTA PACIFICA SUBDIVISION**
UTILITY IMPROVEMENTS
CORREGIDOR DRIVE STA: 10+00.00 TO STA: 17+73.96

DESIGN REVIEW COMMITTEE	CITY ENGINEER APPROVAL	LAST DESIGN UPDATE	MO./DAY/YR.	MO./DAY/YR.
APPROVED JAN - 8 DESIGN REVIEW COMMITTEE	APPROVED JAN 10 CITY ENGINEER			

CITY PROJECT NO.	ZONE MAP NO.	SHEET
695081	K-11-Z	21 OF 25

CERTIFICATE OF SUBSTANTIAL COMPLIANCE ON PLANS

I, Ronald R. Bohannan, of the firm of Tierra West LLC, a Registered Professional Engineer in the State of New Mexico, do hereby certify, to the best of my knowledge and belief, that the infrastructure installed as part of this project has been inspected by me or by a qualified person under my direct supervision and has been constructed in accordance with the plans and specifications approved by the City Engineer and that the original design intent of the approved plans has been met, except as noted by me on the as-built construction drawings. This Certification is based on site inspections by me, or personnel under my direction with survey information provided by Russ P. Hugg, of Surv-Tek, NMPS number 9750.

Engineer's Seal & Signature

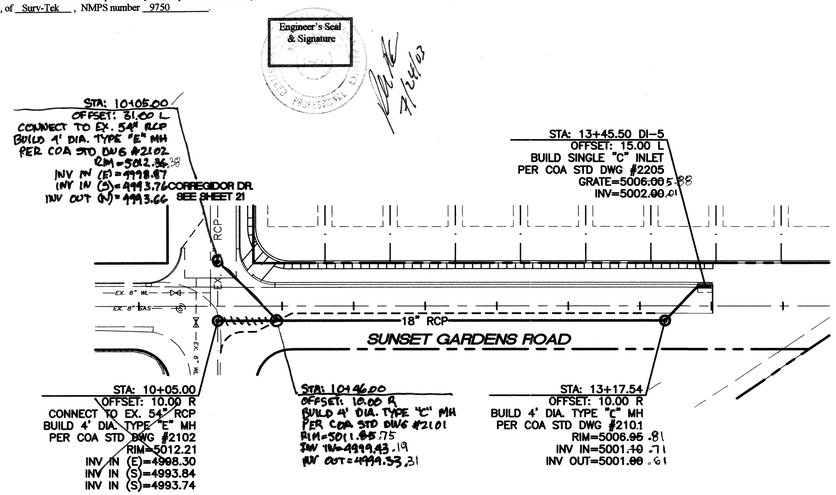

SCANNED BY MESA REPRO

SCALE: HORIZ. 1"=50'
VERT. 1"=5'

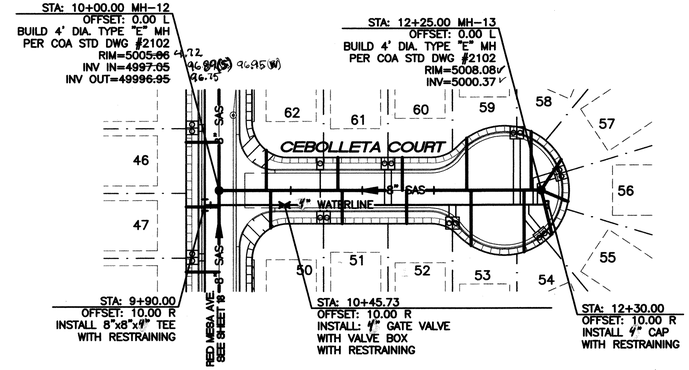

WL TABLE

LOT #	STATION	SERVICE
50&51	10+73.00	DOUBLE
52&53	11+62.98	DOUBLE
54&55	12+28.16	DOUBLE
56&57	12+42.53	DOUBLE
58&59	12+08.04	DOUBLE
60&61	11+18.02	DOUBLE
62	10+73.02	SINGLE

SAS TABLE

LOT #	STATION*	LF	INV.*	ELEV. @ PL
50	10+36.00	23	5001.15	5006.15
51	10+86.00	23	5001.50	5006.50
52	11+31.00	23	5002.10	5007.10
53	11+76.00	39	5002.65	5007.65
54	12+13.00	43	5003.10	5008.10
55	12+32.45	32	5003.25	5008.25
56	12+43.75	21	5003.35	5008.35
57	12+39.00	26	5003.25	5008.25
58	12+18.00	41	5003.10	5008.10
59	11+73.00	37	5002.65	5007.65
60	11+28.00	23	5002.10	5007.10
61	10+83.00	23	5001.50	5006.50
62	10+83.00	28	5001.15	5006.15

* @ END OF SERVICE LINE

Note: Laterals @ Lots 52-60
Property Line Elevations
Dropped 1' (Typical)

GENERAL NOTES:

1. SEE MASTER UTILITY PLAN FOR ALL RESTRAINING.
2. SEE MASTER UTILITY PLAN FOR SANITARY SERVICE CONNECTIONS.

SCALE: HORIZ. 1"=50'
VERT. 1"=5'

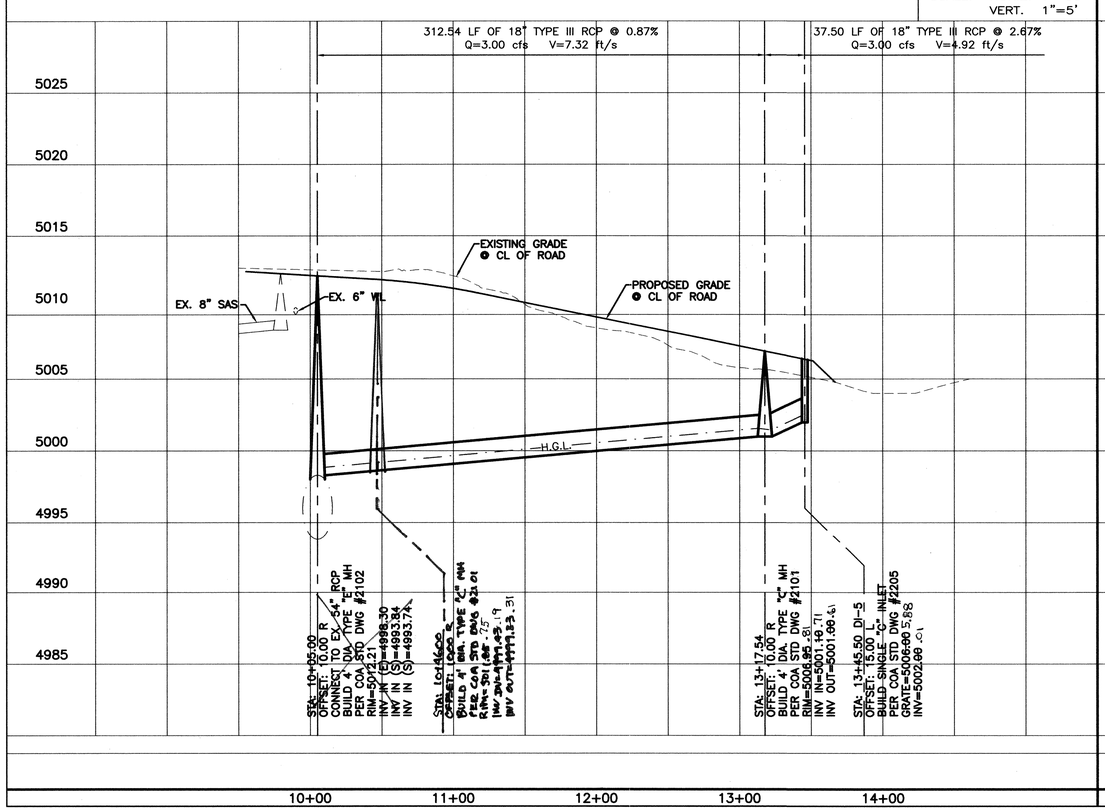

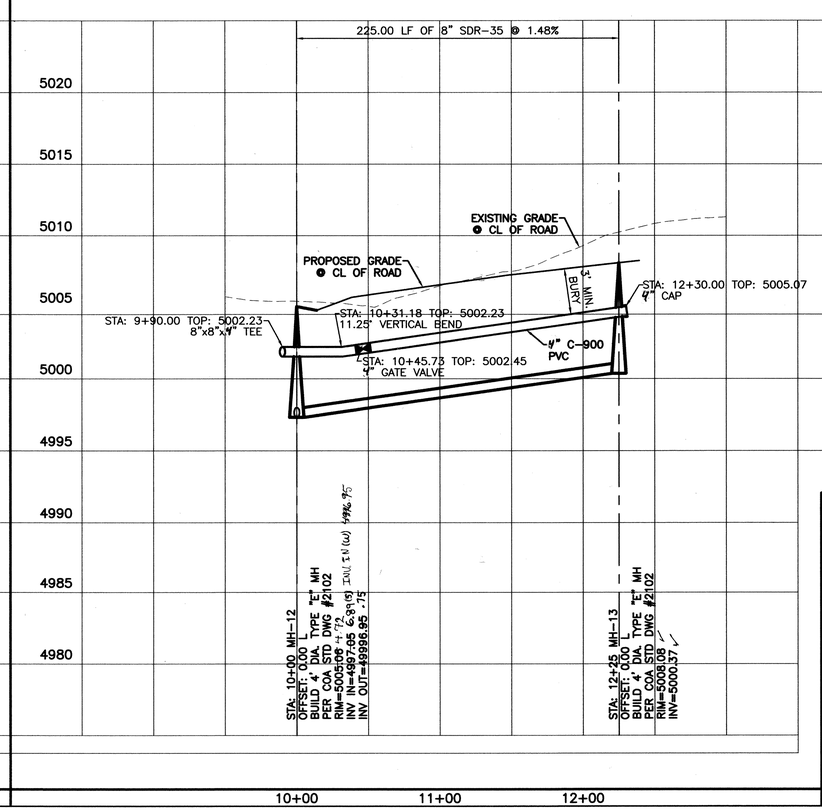

AS BUILT INFORMATION

CONTRACTOR	CCM, INC.	2003
WORK STAKED BY	SURV-TEK	DATE 20023
INSPECTOR'S ACCEPTANCE BY	COA/TW	DATE 20023
FIELD VERIFICATION BY	COA/TW	DATE 2003/05
DRAWINGS CORRECTED BY	TIERRA WEST	DATE 2003

MICRO-FILM INFORMATION

RECORDED BY	
DATE	
NO.	

BENCH MARKS

ACS MONUMENT "NM45-4A"
CENTRAL STATION DATA SOUTH OF BRIDGE BETWEEN SOUTH COORS AND TOWER RD.
NM STATE PLANE COORDINATES
Central Zone (NAD 1927)
X=365,169.46
Y=1,480,226.55
G-G=0.9996815
Da=-00°15'32"
EL.=5002.981 (SLD 1929)

SURVEY INFORMATION

FIELD NOTES

NO.	BY	DATE

ENGINEER'S SEAL

NO.	DATE	REMARKS	BY
		REVISIONS	

DESIGN

DESIGNED BY	JDN	DATE 08-02
DRAWN BY	JDN	DATE 09-13-02
DRAWN NAME:	SUNSETUTPP.DWG	21117
CHECKED BY	RRB	DATE 08-02

TIERRA WEST, LLC
8509 JEFFERSON NE
ALBUQUERQUE, NEW MEXICO 87113
(505)858-3100

CITY OF ALBUQUERQUE
PUBLIC WORKS DEPARTMENT
ENGINEERING GROUP

TITLE: **VISTA PACIFICA SUBDIVISION**
UTILITY & STORM SEWER IMPROVEMENTS
SUNSET GARDENS RD. AND CEBOLLETA CT.

DESIGN REVIEW COMMITTEE: APPROVED JAN - 8 DESIGN REVIEW COMMITTEE

CITY ENGINEER APPROVAL: APPROVED JAN 10 2003 CITY ENGINEER

LAST DESIGN UPDATE | MO./DAY/YR. | MO./DAY/YR.

CITY PROJECT NO. 695081 | ZONE MAP NO. K-11-Z | SHEET 22 OF 25

CERTIFICATE OF SUBSTANTIAL COMPLIANCE ON PLANS

I, Ronald R. Bohannan, of the firm of Tierra West LLC, a Registered Professional Engineer in the State of New Mexico, do hereby certify, to the best of my knowledge and belief, that the infrastructure installed as part of this project has been inspected by me or by a qualified person under my direct supervision and has been constructed in accordance with the plans and specifications approved by the City Engineer and that the original design intent of the approved plans has been met, except as noted by me on the as-built construction drawings. This Certification is based on site inspections by me, or personnel under my direction with survey information provided by Russ P. Hugg, of Surv-Tek, NMPS number 9750.

Engineer's Seal & Signature

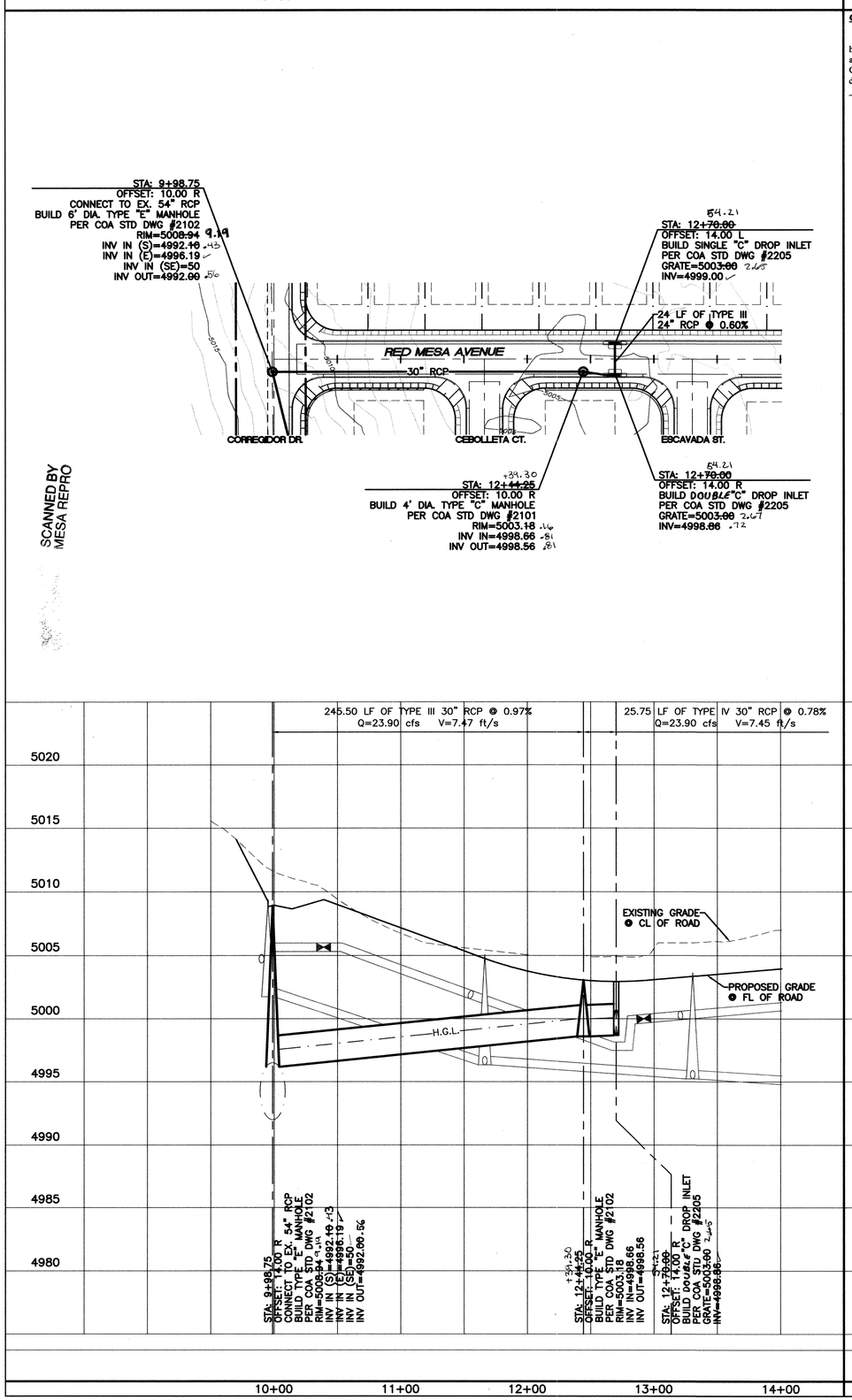

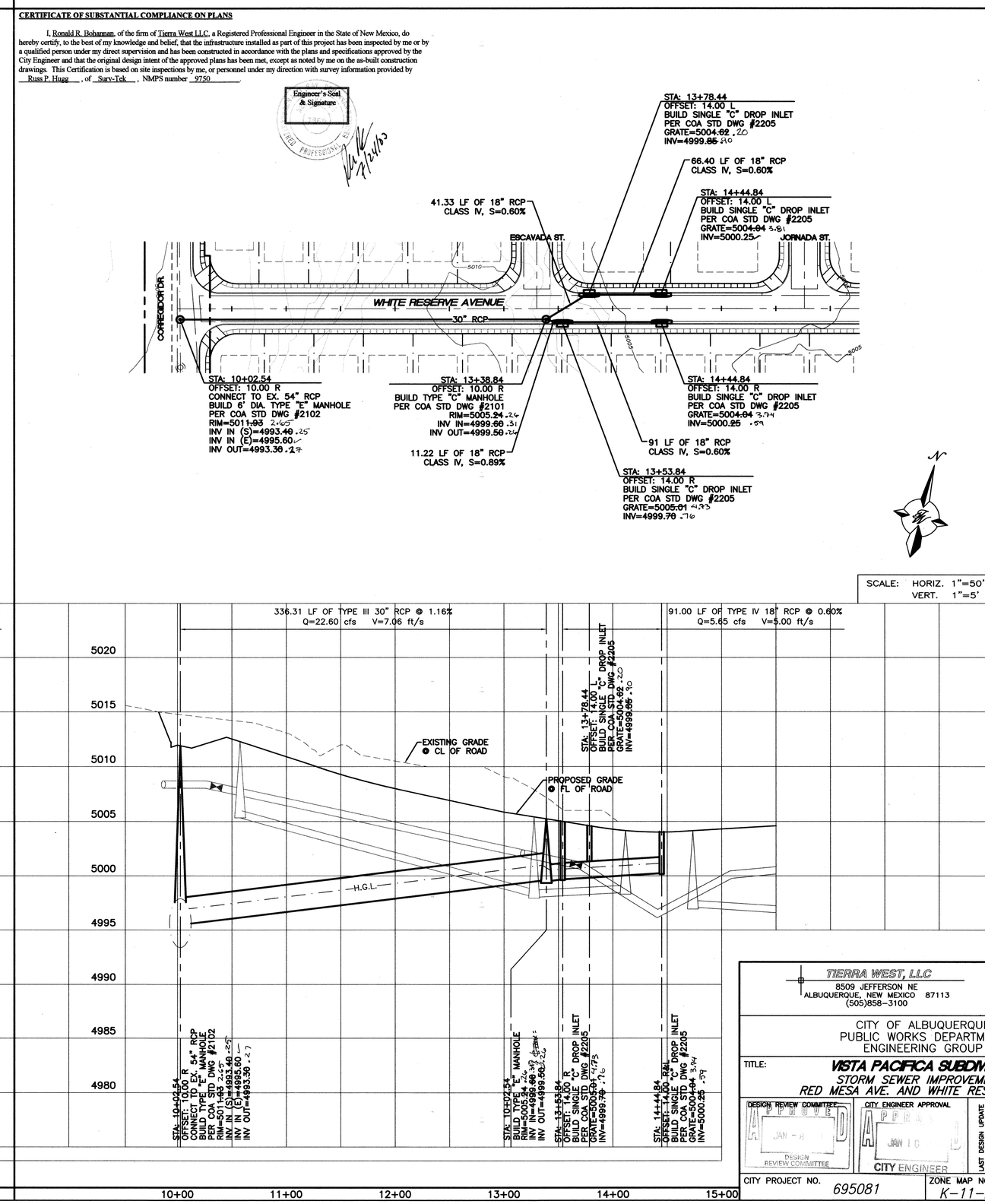

SCALE: HORIZ. 1"=50'
VERT. 1"=5'

SCANNED BY MESA REPRO

AS BUILT INFORMATION

CONTRACTOR	CCM, INC.	2003
WORK STAKED BY	SURV-TEK	20023
INSPECTOR'S ACCEPTANCE BY	COA/TW	DATE 20023
VERIFICATION BY	COA/TW	DATE 2003/03
CORRECTIONS BY	TIERRA WEST	DATE 2003

MICRO-FILM INFORMATION

RECORDED BY	
DATE	
NO.	

BENCH MARKS

ACS MONUMENT "NM45-4A"
CENTRAL STATION DATA SOUTH OF BRIDGE BETWEEN SOUTH COORS AND TOWER RD.
NM STATE PLANE COORDINATES
Central Zone (NAD 1927)
X=365,169.46
Y=1,480,226.55
G-G=0.9996815
Da=-0°15'32"
EL.=5002.981 (SLD 1929)

SURVEY INFORMATION

FIELD NOTES

NO.	BY	DATE

ENGINEER'S SEAL

RONALD RAY BOHANNAN NEW MEXICO 7868 PROFESSIONAL ENGINEER

NO.	DATE	REMARKS	BY
		REVISIONS	

DESIGN

DESIGNED BY	JDN	DATE 08-02
DRAWN BY	JDN	DATE 09-13-02
DRAWN NAME:	REDMESSPP1.DWG	21117
CHECKED BY	RRB	DATE 08-02

TIERRA WEST, LLC
8509 JEFFERSON NE
ALBUQUERQUE, NEW MEXICO 87113
(505)858-3100

CITY OF ALBUQUERQUE
PUBLIC WORKS DEPARTMENT
ENGINEERING GROUP

TITLE: **VISTA PACIFICA SUBDIVISION**
STORM SEWER IMPROVEMENTS
RED MESA AVE. AND WHITE RESERVE AVE.

DESIGN REVIEW COMMITTEE: APPROVED JAN - 8 DESIGN REVIEW COMMITTEE

CITY ENGINEER APPROVAL: APPROVED JAN 10 CITY ENGINEER

LAST DESIGN UPDATE | MO./DAY/YR. | MO./DAY/YR.

CITY PROJECT NO. 695081 | ZONE MAP NO. K-11-Z | SHEET 23 OF 25

CONSTRUCTION TRAFFIC CONTROL GENERAL NOTES

1. CONTRACTOR MUST OBTAIN FROM CONSTRUCTION COORDINATION AN EXCAVATION/BARRICADING PERMIT BEFORE ENGAGING IN ANY CONSTRUCTION, MAINTENANCE OR REPAIR WORK IN ANY OF THE CITY OF ALBUQUERQUE'S RIGHTS-OF-WAY. EMERGENCY WORK THAT WOULD PRESERVE LIFE OR PROPERTY IS EXCLUDED WITH THE UNDERSTANDING, THAT A PERMIT SHALL BE OBTAINED WITHIN 24 TO 48 HOURS.

2. CONTRACTOR SHALL AT THE TIME OF PERMIT REQUEST, SUBMIT FOR APPROVAL BY CONSTRUCTION COORDINATION, A TRAFFIC CONTROL PLAN DETAILING ALL EXISTING TOPOGRAPHY SUCH AS LANE WIDTHS, DRIVEWAYS, AND BUSINESS/RESIDENTIAL ACCESSES. THE TRAFFIC CONTROL PLAN SHALL INCLUDE ALL PHASES OF WORK AND SCHEDULES INVOLVED IN THE CONSTRUCTION PROJECT. ANY SEPARATE PHASES OF A CONSTRUCTION PROJECT SHALL BE GIVEN AN INDIVIDUAL PERMIT EACH. BLANKET PERMITS WILL NOT BE ISSUED.

3. THESE TYPICAL TRAFFIC CONTROL PLANS DO NOT REFLECT THE EXISTING TOPOGRAPHY SUCH AS DRIVEWAYS, LANE WIDTHS, AND BUSINESS/RESIDENTIAL ACCESSES. EVERY LOCATION THAT REQUIRES CONSTRUCTION TRAFFIC CONTROL SHALL HAVE A DETAILED TRAFFIC CONTROL PLAN SHOWING ALL EXISTING TOPOGRAPHY.

4. CONSTRUCTION SHALL NOT BEGIN UNLESS A TRAFFIC CONTROL PLAN HAS BEEN APPROVED AND VERIFIED BY CONSTRUCTION COORDINATION.

5. CONSTRUCTION COORDINATION SHALL BE NOTIFIED 48 HOURS PRIOR TO ANY TRAFFIC CONTROL CHANGES NEEDED BY CONTRACTOR, THAT WERE NOT PREVIOUSLY APPROVED. THESE TRAFFIC CONTROL CHANGES SHALL BE REQUESTED IN WRITING ACCOMPANIED WITH A TRAFFIC CONTROL PLAN REFLECTING SUCH CHANGES.

6. ALL CONSTRUCTION TRAFFIC CONTROL DEVICES SHALL COMPLY TO THE MANUAL ON UNIFORM TRAFFIC CONTROL DEVICES (MUTCD), LATEST EDITION. IT IS THE RESPONSIBILITY OF THE CONTRACTOR TO INSTALL, SERVICE AND MAINTAIN ALL TRAFFIC CONTROL DEVICES. TRAFFIC CONTROL DEVICES SHALL NOT BE REMOVED OR ALTERED IN ANY WAY WITHOUT THE APPROVAL OF CONSTRUCTION COORDINATION, PER SECTION 6A-4 OF THE MUTCD, LATEST EDITION.

7. THE CONSTRUCTION TRAFFIC CONTROL INITIAL SET-UP SHALL BE BY AN AMERICAN TRAFFIC SAFETY SERVICES ASSOCIATION (ATSSA) CERTIFIED WORKSITE TRAFFIC SUPERVISOR. THE MAINTENANCE AND SERVICING SHALL ALSO BE DONE BY AN ATSSA CERTIFIED WORKSITE TRAFFIC SUPERVISOR OR EQUIVALENT.

8. CONTRACTOR IS RESPONSIBLE TO MAINTAIN AND SERVICE ALL TRAFFIC CONTROL DEVICES 24 HOURS A DAY, 7 DAYS A WEEK THROUGHOUT LENGTH OF PROJECT. CONTRACTOR IS RESPONSIBLE THAT ALL TRAFFIC CONTROL DEVICES COMPLY WITH THE MUTCD, LATEST EDITION.

9. ALL ADVANCE WARNING SIGNS SHALL BE DOUBLE INDICATED WHENEVER THERE ARE MULTI-LANE TRAFFIC IN ANY ONE GIVEN DIRECTION AND THERE IS SUFFICIENT MEDIAN SPACE.

10. ALL BARRICADES IN ALL TAPERS AND TANGENTS SHALL BE PLACED APART, A DISTANCE MEASURED IN FEET, EQUAL TO THAT OF THE POSTED SPEED LIMIT. NO EXCEPTIONS UNLESS APPROVED BY CONSTRUCTION COORDINATION PER MUTCD SECTION 6A-4.

11. ALL WORK IN ARTERIAL ROADWAYS SHALL BE ON A CONTINUOUS 24HOUR PER DAY BASIS UNTIL COMPLETED. (1)

12. CONTRACTOR IS RESPONSIBLE TO PROVIDE CONSTRUCTION COORDINATION, A WEEKLY LOG OF DAILY INSPECTIONS OF BARRICADE AND MAINTENANCE SCHEDULES ON PROJECTS THAT ARE OVER ONE WEEK DURATION.

13. EQUIPMENT OR MATERIALS SHALL NOT BE STORED WITHIN 15 FEET OF A TRAVELLED TRAFFIC LANE DURING NON-WORKING HOURS WITHOUT THE APPROVAL OF CONSTRUCTION COORDINATION.

14. CONTRACTOR SHALL PROVIDE AND MAINTAIN A SAFE AND ADEQUATE MEANS OF CHANNELIZING PEDESTRIAN TRAFFIC AROUND AND THROUGH THE CONSTRUCTION AREA.

15. CONTRACTOR IS RESPONSIBLE FOR OBLITERATION OF ANY CONFLICTING STRIPING AND RESPONSIBLE FOR ALL TEMPORARY STRIPING.

16. CONTRACTOR SHALL MAINTAIN ACCESS TO ALL FACILITIES, BUSINESSES AND/OR RESIDENTS AT ALL TIMES.

17. CONTRACTOR SHALL PROVIDE ACCESS SIGNS FOR BUSINESSES LOCATED WITHIN THE CONSTRUCTION AREA UNDER THE SUPERVISION OF CONSTRUCTION COORDINATION. EACH ACCESS SIGN SHALL HAVE 5 INCH, WHITE OPAQUE LETTERING ON BLUE REFLECTORIZED BACKGROUND. ACCESS SIGNS SHALL BE CONSIDERED INCIDENTAL TO THE BID AND NOT PART OF THE CONTRACT UNLESS OTHERWISE STATED. NO MORE THAN 3 BUSINESSES SHALL BE LISTED ON A ACCESS SIGN. SHOPPING CENTERS AND MALLS SHALL BE LISTED AS SUCH.

18. ALL ADVANCE WARNING SIGNS SHALL MEET THE MINIMUM REFLECTIVE INTENSITY REQUIREMENTS SET FORTH BY THE CITY OF ALBUQUERQUE. CONSTRUCTION COORDINATION SHALL DETERMINE ALL REQUIREMENTS AND APPROVE OR DISAPPROVE ANY ADVANCE WARNING SIGN PER SECTION 6A-4 OF THE MUTCD, LATEST EDITION.

19. (2) 48 HOURS PRIOR TO OCCUPYING OR CLOSING OF A RIGHT-OF-WAY, CONTRACTOR SHALL NOTIFY: POLICE, FIRE DEPARTMENT, SCHOOLS, HOSPITALS, TRANSIT AUTHORITY, BUSINESSES AND/OR RESIDENTS THAT WILL BE AFFECTED BY THE CONSTRUCTION.

20. ANY FIELD ADJUSTMENTS SHALL BE APPROVED BY CONSTRUCTION COORDINATION.

21. EXCAVATIONS SHALL BE PLATED, TEMPORARILY PATCHED OR RESURFACED PRIOR TO OPENING OF TRAFFIC. A MINIMUM OF 11 FEET SHALL BE PROVIDED FOR TRAFFIC IN ANY GIVEN DIRECTION. CONTRACTOR IS RESPONSIBLE FOR ANY WORK INVOLVED IN SATISFYING THESE REQUIREMENTS.

22. CONTRACTOR SHALL AT ALL TIMES COMPLY WITH THE FOLLOWING:
    1. STANDARDS AND REQUIREMENTS SET FORTH IN THE MANUAL ON UNIFORM TRAFFIC CONTROL DEVICES, LATEST EDITION.
    2. THE CITY OF ALBUQUERQUE TRAFFIC CODE, LATEST EDITION.
    3. SECTION 19 OF THE CITY OF ALBUQUERQUE'S STANDARD SPECIFICATIONS FOR PUBLIC WORK CONSTRUCTION, AS WELL AS OTHER SECTIONS.

23. FAILURE TO COMPLY WITH ANY OF THE ABOVE MENTIONED, WILL BE ADEQUATE CAUSE TO CEASE ALL WORK ON ANY CONSTRUCTION PROJECT. WORK WILL NOT RESUME UNTIL ALL REQUIREMENTS ARE ADDRESSED AND APPROVED BY CONSTRUCTION COORDINATION.

24. ALL TRAFFIC CONTROL DEVICES SHALL BE KEPT IN NEW-CLEAN CONDITION. WASHING OF EQUIPMENT IS INCIDENTAL TO IT'S PLACEMENT AND MAINTENANCE.

25. TRAFFIC CONTROL STANDARDS APPLY ONLY WHERE THE CONSTRUCTION TRAFFIC CONTROL PLANS ARE NOT SPECIFIC.

26. ADVANCE WARNING SIGNS SHALL BE 36"x36" MIN. WITH SUPER ENGINEERING GRADE SHEETING OR BETTER. MOUNTING HEIGTH AT TOP OF SIGN SHALL BE THE SAME AS FOR A 48" SIGN AS INDICATED IN THE M.U.T.C.D. (3)

27. CONTRACTOR SHALL MAINTAIN A GRAFFITI-FREE WORKSITE. ALL GRAFFITI SHALL BE PROMPTLY REMOVED FROM ALL EQUIPMENT, BOTH PERMANENT AND TEMPORARY. (4)

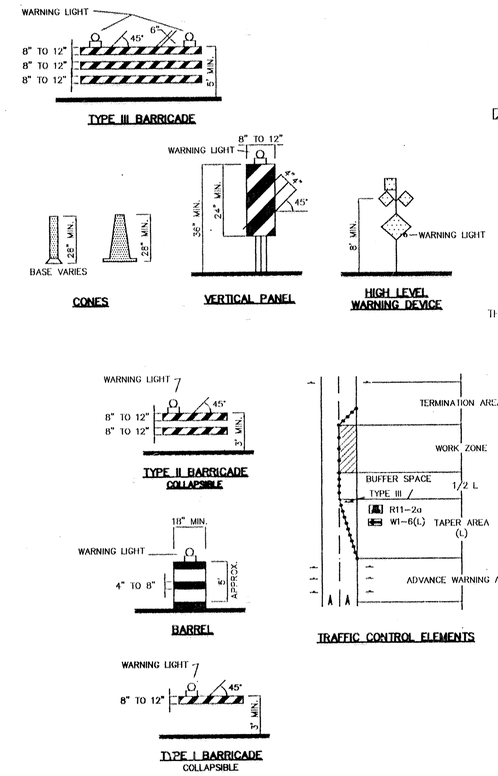

LEGEND

- WORK AREA
- BARRICADE – TYPE I, TYPE II, OR BAREL
- BAPRICADE – TYPE III
- X VERTICAL PANEL
- WARNING SIGN
- D DISTANCE BETWEEN SIGNS – A DISTANCE MEASURED IN FEET EQUAL TO A VALUE OF TEN TIMES THE SPEED LIMIT OF THE STREET
- FLAGMAN POSITION
- S SPACING BETWEEN BARRICADES– A DISTANCE MEASURED IN FEET EQUAL TO THE SPEED LIMIT OF THE STREET
- L TAPER LENGTH – SEE CHART BELOW

THE TANGENT LENGTH IS EQUAL TO THE TAPER LENGTH FOR A GIVEN STREET.

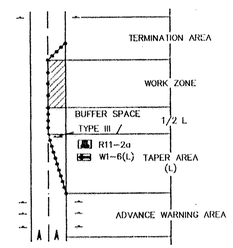

TRAFFIC CONTROL ELEMENTS

TAPER REQUIREMENTS

SPEED LIMIT (MPH)	TAPER LENGTH (L) (FEET)			MINIMUM NUMBER OF DEVICES FOR TAPER	MAXIMUM DEVICE SPACING IN FEET	
	10' LANE	11' LANE	12' LANE		ALONG TAPER	AFTER TAPER
20	70	75	80	5	20	20
25	105	115	125	6	25	25
30	150	165	180	7	30	30
35	205	225	245	8	35	35
40	270	295	320	9	40	40
45	450	495	540	13	45	45
50	500	550	600	13	50	50
55	550	605	660	13	55	55

RECOMMENDED SIGN SPACING(D) FOR ADVANCE WARNING SIGN SERIES

SPEED MILES PER HOUR	MINIMUM DISTANCE IN FEET BETWEEN SIGNS	FROM LAST SIGN TO TAPER
0–20	10 X SPEED LIMIT	10 X SPEED LIMIT
25–30	10 X SPEED LIMIT	10 X SPEED LIMIT
30–35	10 X SPEED LIMIT	10 X SPEED LIMIT
40–45	10 X SPEED LIMIT	10 X SPEED LIMIT
50–60	10 X SPEED LIMIT	10 X SPEED LIMIT

TAPER CRITERIA

TYPE OF TAPER	TAPER LENGTH
UPSTREAM TAPER:	
MERGING TAPER	L MINIMUM
SHIFTING TAPER	1/2 L MINIMUM
SHOULDER TAPER	1/2 L MINIMUM
TWO-WAY TRAFFIC TAPER	100 FEET MAXIMUM
DOWNSTREAM TAPERS	100 FEET PER LANE

TAPER LENGTH COMPUTATION

SPEED LIMIT	
40 MPH OR LESS	$L = \frac{WS^2}{60}$
45 MPH OR GREATER	$L = W \times S$

L = TAPER LENGTH
W = WIDTH OF OFFSET IN FEET
S = POSTED SPEED OR OFF-PEAK 85-PERCENTILE SPEED IN MPH

SIGN FACE DETAILS

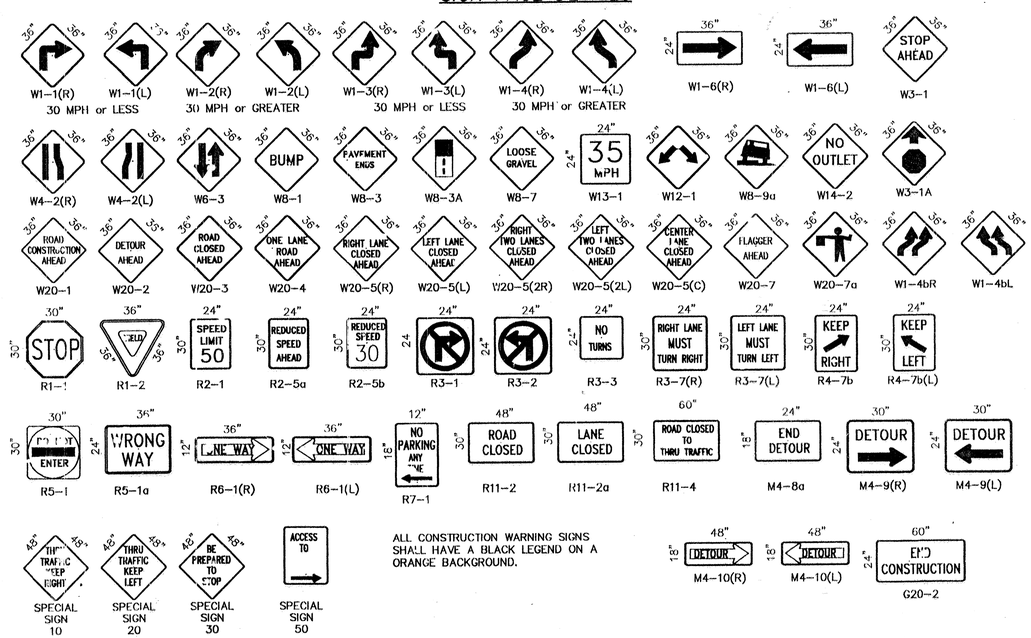

ALL CONSTRUCTION WARNING SIGNS SHALL HAVE A BLACK LEGEND ON A ORANGE BACKGROUND.

AS BUILT INFORMATION

CONTRACTOR	CCM, INC.	DATE 2003
WORK STAKED BY	SURVTEK	DATE 2002/3
STAKING CHECKED BY	CON/TW	DATE 2002/3
ACCEPTANCE BY	CON/TW	DATE 2002/3
FIELD VERIFICATION BY	CON/TW	DATE 2002/03
DRAWINGS CORRECTED BY	TIERRA WEST	DATE 2003

MICRO-FILM INFORMATION

RECORDED BY	DATE
NO.	

BENCH MARKS

SURVEY INFORMATION

NO.	FIELD NOTES BY	DATE

ENGINEER'S SEAL

NO.	DATE	REMARKS	BY
4	9/25/97	ADD NOTE NO. 27	J.D.L.
3	9/24/97	REVISED NOTE NO. 26	J.D.L.
2	9/24/97	REVISED NOTE NO. 19	J.D.L.
1	9/24/97	REVISED NOTE NO. 11	J.D.L.

REVISIONS

		DATE
DESIGN	DESIGNED BY	
	DRAWN BY C.O.A. STANDARDS	DATE
	CHECKED BY	DATE

CITY OF ALBUQUERQUE
PUBLIC WORKS DEPARTMENT
ENGINEERING DEVELOPMENT GROUP

TITLE: **SIGNING AND CONSTRUCTION TRAFFIC CONTROL STANDARDS**

DESIGN REVIEW COMMITEE	CITY ENGINEER APPROVAL	LAST UPDATE	MO./DAY/YR.	MO./DAY/YR.
COASTD				

PROJECT NO.	MAP NO.	SHEET OF
		24 OF 25

SCANNED BY MESA REPRO

CTSCSTND.DWG

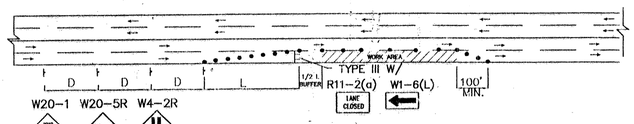

TYPICAL RIGHT LANE CLOSURE

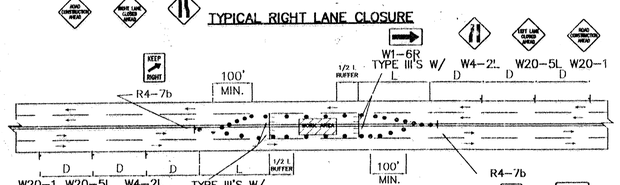

TYPICAL LEFT LANE CLOSURE

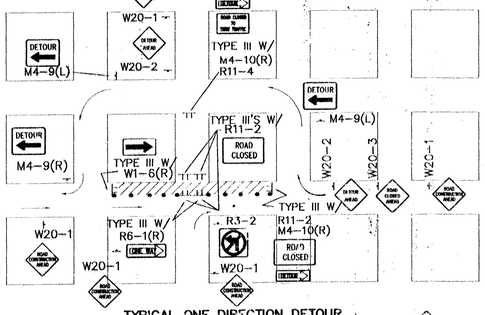

TYPICAL ONE DIRECTION DETOUR

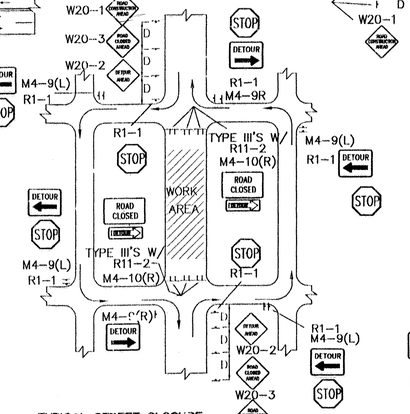

TYPICAL STREET CLOSURE

NOTE: (R1-1) BASED ON FIELD CONDITIONS.

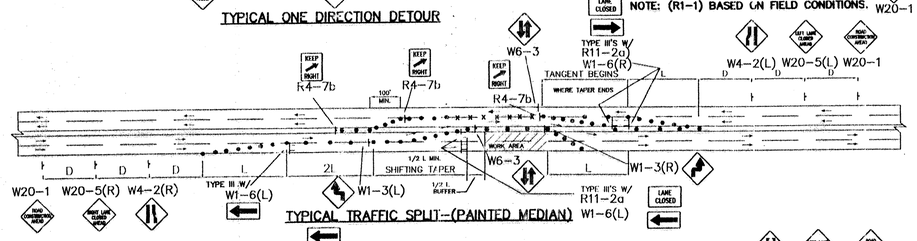

TYPICAL TRAFFIC SPLIT-(PAINTED MEDIAN)

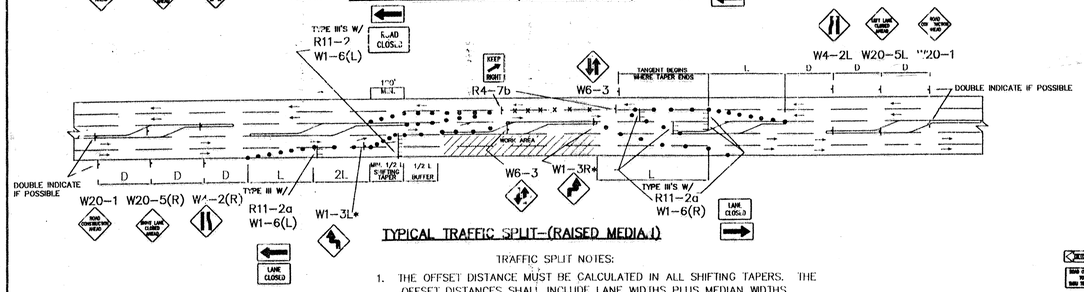

TYPICAL TRAFFIC SPLIT-(RAISED MEDIAN)

TRAFFIC SPLIT NOTES:

1. THE OFFSET DISTANCE MUST BE CALCULATED IN ALL SHIFTING TAPERS. THE OFFSET DISTANCES SHALL INCLUDE LANE WIDTHS PLUS MEDIAN WIDTHS.
2. 1/2 L IS MINIMUM DISTANCE FOR SHIFTING TAPERS.
3. REVERSE CURVES MAY BE IMPLEMENTED. ALL CURVE DATA SHALL BE CALCULATED.
4. MEDIAN REMOVAL SHALL BE REQUIRED IF 1/2 L OR REVERSE CURVE IS NOT SUFFICIENT. MEDIAN REMOVAL SHALL TAKE PLACE BEFORE SPLITS.
5. REDUCED SPEED MAY BE CONSIDERED.
6. * USE W1-3 FOR 30 MPH OR LESS, W1-4 FOR SPEED 35 MPH OR GREATER.

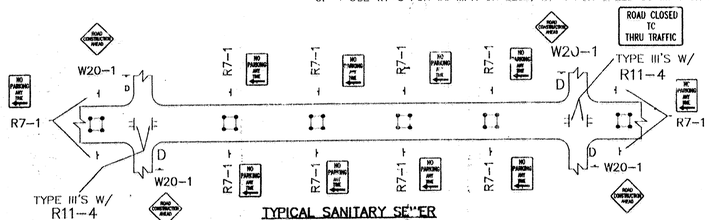

TYPICAL SANITARY SEWER SLIPLINING OPERATION

- ALL PITS TO HAVE TYPE-A FLASHING LIGHTS.
- ALL PITS TO HAVE FLAGLINE.

NOTE:
MAY REQUIRE LEFT LANE CLOSURE DEPENDING ON FIELD CONDITIONS.

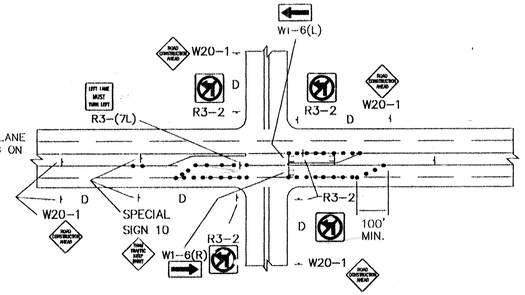

TYPICAL LANE CLOSURE AT INTERSECTION

NOTE: DEPENDING ON WORK ZONE LOCATION

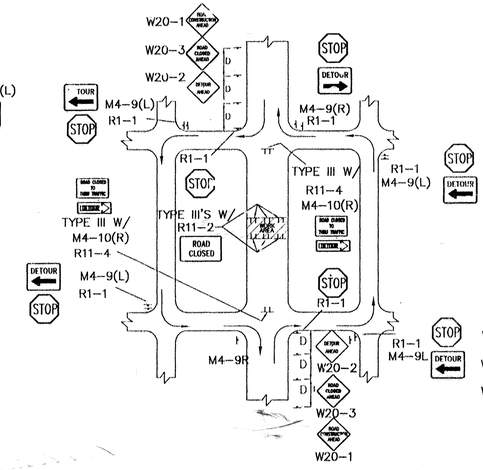

TYPICAL MID-BLOCK CLOSURE

NOTE: (R1-1) BASED ON FIELD CONDITIONS.

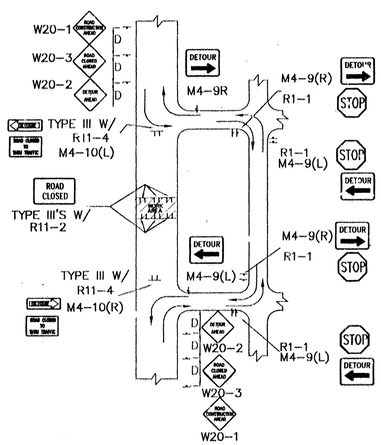

TYPICAL STREET CLOSURE

NOTE: (R1-1) BASED ON FIELD CONDITIONS.

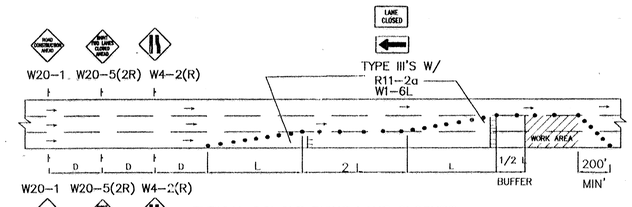

TYPICAL DOUBLE RIGHT LANE CLOSURE

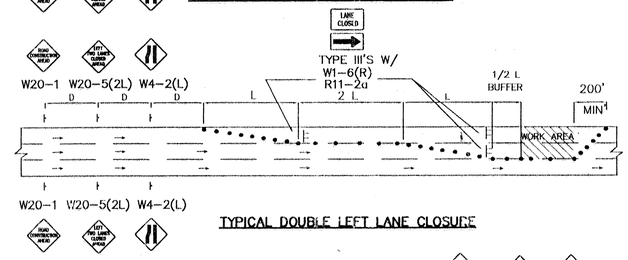

TYPICAL DOUBLE LEFT LANE CLOSURE

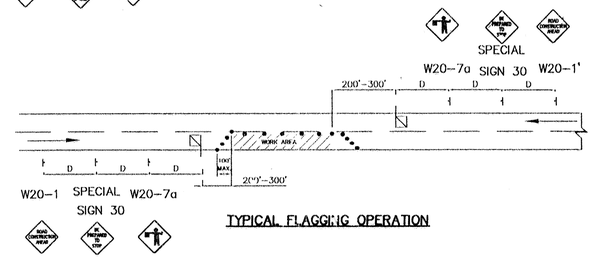

TYPICAL FLAGGING OPERATION

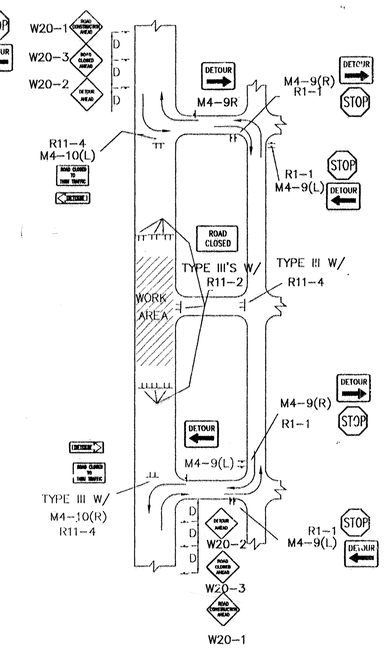

TYPICAL STREET CLOSURE

NOTE: (R1-1) BASED ON FIELD CONDITIONS.

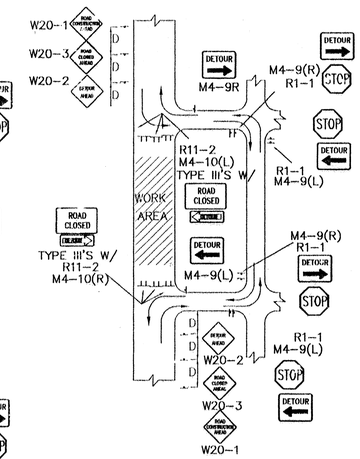

TYPICAL STREET CLOSURE

NOTE: (R1-1) BASED ON FIELD CONDITIONS.

GENERAL NOTE:

ALL CONSTRUCTION WARNING SIGNS SHALL HAVE A BLACK LEGEND ON A ORANGE BACKGROUND.

ALL ADVANCE WARNING SIGNS SHALL BE A MINIMUM OF 36" THIRTY SIX INCHES BY 36" THIRTY SIX INCHES IN SIZE AND SHALL HAVE ONE WARNING LIGHT. △1

SCANNED BY MESA REPRO

AS BUILT INFORMATION

CONTRACTOR	CCM, INC.	DATE 2003
WORK STAKED BY	SURV-TEK	DATE 20023
INSPECTOR'S ACCEPTANCE BY	COA/TVI	DATE 20023
FIELD VERIFICATION BY	COA/TVI	DATE 20020
DRAWINGS CORRECTED BY	TIERRA WEST	DATE 2003
RECORDED BY	MICRO-FILM INFORMATION	DATE
NO.		

BENCH MARKS

SURVEY INFORMATION

FIELD NOTES

NO.	BY	DATE

ENGINEER'S SEAL

NO.	DATE	REMARKS	BY
△1	9/24/07	REVISED GENERAL NOTE	J.D.L

REVISIONS

DESIGNED BY	C.O.A. STANDARDS	DATE
DRAWN BY		DATE
CHECKED BY		DATE

CITY OF ALBUQUERQUE
PUBLIC WORKS DEPARTMENT
ENGINEERING DEVELOPMENT GROUP

TITLE:

TYPICAL TRAFFIC CONTROL & SIGNING EXAMPLES (REF. M.U.T.C.D.)

DESIGN REVIEW COMMITTEE	CITY ENGINEER APPROVAL	LAST UPDATE	MO./DAY/YR.	MO./DAY/YR.
COA STD				

PROJECT NO.	MAP NO.	SHEET OF
		25 OF 25

C:\DESIGN\...DWG