CONSTRUCTION PLANS

FOR

OTOÑO PLAZA

ALBUQUERQUE, NEW MEXICO

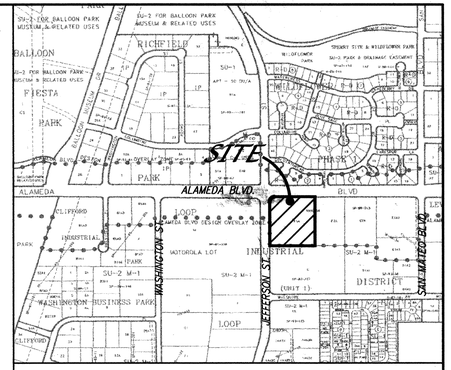

VICINITY MAP — ZONE ATLAS: C-17

SCALE: NONE

GENERAL NOTES

NOTICE TO CONTRACTORS

1. AN EXCAVATION/CONSTRUCTION PERMIT WILL BE REQUIRED BEFORE BEGINNING ANY WORK WITHIN THE CITY RIGHT-OF-WAY.
2. ALL WORK DETAILED ON THESE PLANS TO BE PERFORMED UNDER CONTRACT SHALL, EXCEPT AS OTHERWISE STATED OR PROVIDED FOR HEREON, BE CONSTRUCTED IN ACCORDANCE WITH THE CITY OF ALBUQUERQUE STANDARD SPECIFICATIONS FOR PUBLIC WORKS CONSTRUCTION, 1986 EDITION AS REVISED THROUGH UPDATE #6.
3. TWO WORKING DAYS PRIOR TO ANY EXCAVATION, THE CONTRACTOR MUST CONTACT NEW MEXICO ONE CALL SYSTEM (260-1990) FOR LOCATION OF EXISTING UTILITIES.
4. PRIOR TO CONSTRUCTION, THE CONTRACTOR SHALL EXCAVATE AND VERIFY THE HORIZONTAL AND VERTICAL LOCATIONS OF ALL OBSTRUCTIONS. SHOULD A CONFLICT EXIST, THE CONTRACTOR SHALL NOTIFY THE ENGINEER IMMEDIATELY SO THAT THE CONFLICT CAN BE RESOLVED WITH A MINIMUM AMOUNT OF DELAY.
5. FIVE (5) WORKING DAYS PRIOR TO BEGINNING OF CONSTRUCTION, THE CONTRACTOR SHALL SUBMIT TO CONSTRUCTION COORDINATION DIVISION A DETAILED CONSTRUCTION SCHEDULE. TWO (2) WORKING DAYS PRIOR TO THE START OF CONSTRUCTION, THE CONTRACTOR SHALL OBTAIN A BARRICADING PERMIT FROM THE CONSTRUCTION COORDINATION DIVISION. CONTRACTOR SHALL NOTIFY THE CONSTRUCTION COORDINATION ENGINEER (924-3400) PRIOR TO OCCUPYING AN INTERSECTION. REFER TO SECTION 19 OF THE GENERAL CONDITIONS OF THE STANDARD SPECIFICATIONS.
6. ALL WORK AFFECTING ARTERIAL ROADWAYS REQUIRES TWENTY-FOUR HOUR CONSTRUCTION.
7. ALL STREET STRIPING ALTERED OR DESTROYED SHALL BE REPLACED WITH PLASTIC REFLECTORIZED PAVEMENT MARKING BY CONTRACTOR TO THE SAME LOCATION AS WAS EXISTING, OR AS INDICATED BY THIS PLAN SET.
8. CONTRACTOR SHALL NOTIFY THE ENGINEER NOT LESS THAN SEVEN (7) DAYS PRIOR TO STARTING WORK IN ORDER THAT THE CITY SURVEYOR MAY TAKE NECESSARY MEASURES TO INSURE THE PRESERVATION OF SURVEY MONUMENTS. CONTRACTOR SHALL NOT DISTURB PERMANENT SURVEY MONUMENTS WITHOUT THE CONSENT OF THE CITY SURVEYOR AND SHALL NOTIFY THE CITY SURVEYOR AND BEAR THE EXPENSE OF REPLACING ANY THAT MAY BE DISTURBED WITHOUT PERMISSION. REPLACEMENT SHALL BE DONE ONLY BY THE CITY SURVEYOR. WHEN A CHANGE IS MADE IN THE FINISHED ELEVATIONS OF THE PAVEMENT OF ANY ROADWAY IN WHICH A PERMANENT SURVEY MONUMENT IS LOCATED, CONTRACTOR SHALL, AT HIS OWN EXPENSE, ADJUST THE MONUMENT TO COVER THE NEW GRADE UNLESS OTHERWISE SPECIFIED. REFER TO SECTION 4.4 OF THE GENERAL CONDITIONS OF THE STANDARD SPECIFICATIONS.

   CONTRACTOR SHALL RECORD DATA ON ALL UTILITY LINES AND ACCESSORIES AS REQUIRED BY THE CITY OF ALBUQUERQUE FOR THE PREPARATION OF "AS CONSTRUCTED" DRAWINGS. CONTRACTOR SHALL NOT COVER UTILITY LINES AND ACCESSORIES UNTIL ALL DATA HAVE BEEN RECORDED.
10. CONTRACTOR SHALL MAINTAIN A GRAFFITI-FREE WORK SITE. CONTRACTOR SHALL PROMPTLY REMOVE ANY GRAFFITI FROM ALL EQUIPMENT, WHETHER PERMANENT OR TEMPORARY.
11. CONTRACTOR SHALL COORDINATE WITH THE CITY OF ALBUQUERQUE WATER SYSTEMS DIVISION (857-8200) SEVEN (7) WORKING DAYS IN ADVANCE OF ANY WORK THAT MAY AFFECT EXISTING PUBLIC WATER OR SEWER UTILITIES. EXISTING VALVES TO BE OPERATED BY CITY PERSONNEL ONLY. CONTRACTOR SHALL CONTACT THE WATER SYSTEMS DIVISION SEVEN (7) WORKING DAYS PRIOR TO NEEDING VALVES TURNED ON OR OFF.
12. FOR STORM DRAIN CONSTRUCTION, RCP JOINTS SHALL NOT BE GROUTED PRIOR TO FINAL INSPECTION. FINAL INSPECTION WILL DETERMINE JOINTS TO BE GROUTED FOR FINAL ACCEPTANCE OF THE CONSTRUCTION.
13. ALL EXCAVATION, TRENCHING AND SHORING ACTIVITIES MUST BE CARRIED-OUT IN ACCORDANCE WITH OSHA 29 CFR 1926.650 SUBPART P.

THE FOLLOWING NOTES ALSO APPLY WHEN CHECKED

- [x] ALL UTILITIES AND UTILITY SERVICE LINES SHALL BE INSTALLED PRIOR TO PAVING.
- [x] BACKFILL COMPACTION SHALL BE ACCORDING TO SPECIFIED STREET USE.
- [ ] TACK COAT REQUIREMENTS SHALL BE DETERMINED BY THE ENGINEER.
- [x] SIDEWALK AND WHEELCHAIR RAMPS WITHIN THE CURB RETURNS SHALL BE CONSTRUCTED WHEREVER A NEW CURB RETURN IS CONSTRUCTED.
- [ ] IF CURB IS DEPRESSED FOR A DRIVEPAD, THE DRIVEPAD SHALL BE CONSTRUCTED PRIOR TO ACCEPTANCE OF CURB AND GUTTER.
- [x] ALL STORM DRAINAGE FACILITIES SHALL BE COMPLETED PRIOR TO FINAL ACCEPTANCE.

CAUTION:
NOTE THAT ALL EXISTING UTILITIES MAY NOT BE SHOWN. ALL EXISTING SERVICE CONNECTIONS ARE NOT SHOWN. ANY EXISTING UTILITIES THAT ARE SHOWN ARE APPROXIMATE LOCATION ONLY. IT SHALL BE THE SOLE RESPONSIBILITY OF THE CONTRACTOR TO CONTACT ALL THE UTILITY OWNERS AND TO CONDUCT ALL NECESSARY FIELD INVESTIGATIONS PRIOR TO ANY EXCAVATIONS TO DETERMINE THE ACTUAL LOCATION OF UTILITIES AND OTHER IMPROVEMENTS.

dmg D. MARK GOODWIN & ASSOCIATES, P.A.
CONSULTING ENGINEERS
P. O. BOX 90606
ALBUQUERQUE, NEW MEXICO 87199
(505) 828-2200, FAX (505) 797-9539

INDEX TO DRAWINGS

SHEET NO.	SHEET
1	TITLE SHEET
2-3	PLAT
4	GRADING & DRAINAGE PLAN
⚠ 5-5A	MASTER UTILITY PLAN
6	UTILITY IMPROVEMENTS
7	WATER DETAIL SHEET
8-9	TRAFFIC CONTROL SHEETS

AS BUILT CERTIFICATION

I, LARRY W. MEDRANO, DO HEREBY ATTEST TO THE FACT THAT THE AS-BUILT INFORMATION SHOWN HEREON IS THE RESULT OF A FIELD SURVEY PERFORMED BY ME OR UNDER MY DIRECT SUPERVISION, AND THAT THE SAME ARE TRUE AND CORRECT TO THE BEST OF MY KNOWLEDGE AND BELIEF.

DATE: 6/18/04

LARRY W. MEDRANO
NEW MEXICO PROFESSIONAL
LAND SURVEYOR NO. 11993

PRECISION SURVEYS, INC.
8414-D JEFFERSON STREET, N.E.
ALBUQUERQUE, NM 87113
(505)856-5700

CERTIFICATE OF SUBSTANTIAL COMPLIANCE ON PLANS

I, Gregory J. Krenik, NMPE 11929, of the firm Mark Goodwin & Associates, PA, a Registered Professional Engineer in the State of New Mexico, do hereby certify, to the best of my knowledge and belief, that the infrastructure installed as part of this project has been inspected by me or by a qualified person under my direct supervision, and has been constructed in accordance with the plans and specifications approved by the City Engineer and that the original design intent of the approved plans has been met, except as noted by me on the as-built construction drawings. This certification is based on site inspections by me or personnel under my direction, and survey information provided by Larry Medrano with Precision Surveys, Inc., NMPS number 11993.

6-25-03

Gregory J. Krenik — NMPE 11929

APPROVED AS RECORD DRAWINGS
DESIGN REVIEW SECTION
CERTIFIED CONSTRUCTION ENGINEER
DATE: 9/9/04

1	2	3	4	5	6	7	8	9	10	11	12	13	14	15
2	6	7	1	5	4	.	8	1					0	4

DRB #1000658

REV.	SHEETS	CITY ENGINEER	DATE	USER DEPARTMENT	DATE	USER DEPARTMENT	DATE
⚠	5A		1-16-04		1/15/04		

ENGINEERS STAMP & SIGNATURE	APPROVALS	ENGINEER	DATE	**********
	DRC CHAIRMAN		9-9-03	APPROVED FOR CONSTRUCTION
	TRANSPORTATION		8-6-03	
	WATER/WASTEWATER		8/26/03	
	HYDROLOGY		8-25-03	
	CIP			10/22/03
	CONSTR. MNGMT.			CITY ENGINEER — DATE
	CONSTR. COORD.		9-9-03	

8-14-03

CITY PROJECT NO. 715481

SHEET 1 OF 9

SCANNED BY MESA REPRO
F:\A03\OBS\a3047oto\PLANS\A3047COVER.dwg Fri Jul 25 13:03:13 2003 D. MARK GOODWIN & ASSOCIATES, PLTTED BY: ACH
A3047OTO/PLANS/A3047COVER/07-22-03/ACH

CORRECTION PLAT FOR
TRACTS F-1-A-1 THRU F-1-A-5 LOOP INDUSTRIAL DISTRICT UNIT 1
WITHIN THE
ELENA GALLEGOS GRANT
PROJECTED SECTIONS 14
TOWNSHIP 11 NORTH, RANGE 3 EAST, NMPM
CITY OF ALBUQUERQUE
BERNALILLO COUNTY, NEW MEXICO
APRIL, 2003

2004049521 6063811 Page: 2 of 3 04/15/2004 12:10P Mary Herrera Bern. Co. PLAT R 17.00 Bk-2004C Pg-122

SCANNED BY MESA REPRO

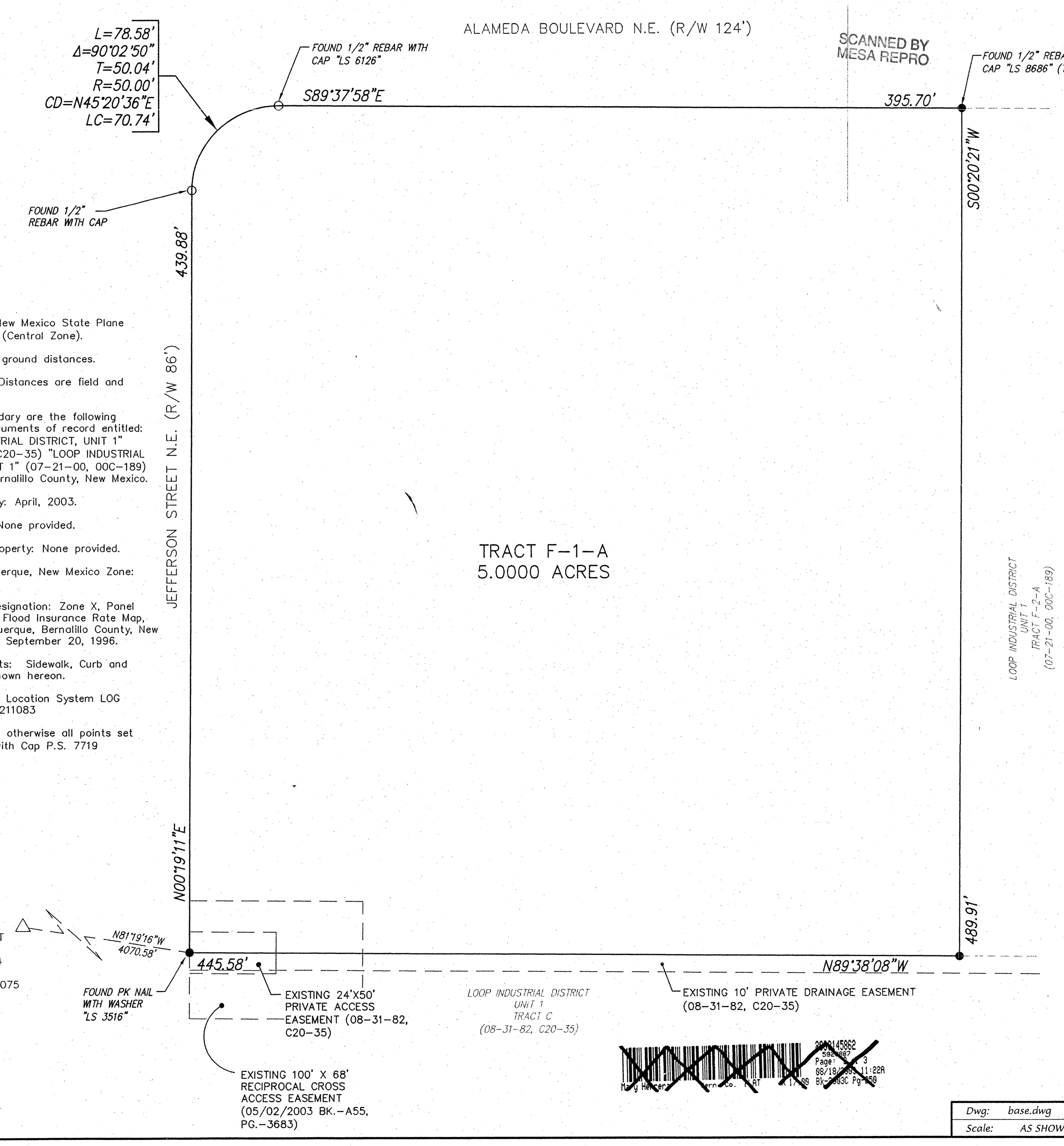

NOTES

1. Bearings are New Mexico State Plane Grid Bearings (Central Zone).
2. Distances are ground distances.
3. Bearings and Distances are field and record.
4. Basis of boundary are the following plats and documents of record entitled: "LOOP INDUSTRIAL DISTRICT, UNIT 1" (08-31-82, C20-35) "LOOP INDUSTRIAL DISTRICT, UNIT 1" (07-21-00, 00C-189) records of Bernalillo County, New Mexico.
5. Date of Survey: April, 2003.
6. Title Report: None provided.
7. Address of Property: None provided.
8. City of Albuquerque, New Mexico Zone: SU-2, M-1
9. Flood Zone Designation: Zone X, Panel 137 of 825, Flood Insurance Rate Map, City of Albuquerque, Bernalillo County, New Mexico, dated September 20, 1996.
10. Encroachments: Sidewalk, Curb and Gutter as shown hereon.
11. Utility control Location System LOG Number 2003211083
12. Unless shown otherwise all points set 5/8" Rebar with Cap P.S. 7719

PUBLIC UTILITY EASEMENTS:

PUBLIC UTILITY EASEMENTS shown on this plat are granted for the common and joint use of :

1. The PNM Electric Services Division for the installation, maintenance and service of overhead and underground electrical lines, communication lines, transformers, poles and any other equipment, fixtures structures and related facilities reasonably necessary to provide electrical services.

2. The PNM Gas Services Division for installation, maintenance and services of natural gas lines, valves and other equipment and facilities reasonably necessary to provide natural gas.

3. Qwest for installation, maintenance and service of all buried and aerial communication lines and other related equipment and facilities reasonably necessary to provide communication services, including but not limited to above ground pedestals and closures.

4. Comcast cable for installation, maintenance and service of such lines, cable and other related equipment and facilities reasonably necessary to provide Cable TV service.

5. The New Mexico Utilities, Inc., for the installation, maintenance and service of water and sanitary sewer lines and any other equipment, fixtures, structures and related facilities reasonably necessary to provide water and sewer services.

Included, is the right to build, rebuild, construct, reconstruct, locate, relocate, change, remove, modify, renew, operate and maintain facilities for the purposes described above, together with free access to, from and over said easement, including sufficient working area space for electric transformers, with the right and privilege to trim and remove trees, shrubs or bushes which interfere with the purposes set forth herein. No building, sign, pool (above ground or subsurface), hot tub, concrete or wood pool decking, or other structure shall be erected or constructed on said easements, nor shall any well be drilled or operated thereon. Property owners shall be solely responsible for correcting any violations of National Electrical Safety Code caused by construction of pools, decking or any structures adjacent to within or near easements shown on this plat.

In approving this plat, the utility companies did not conduct a Title Search of the properties shown hereon. Consequently, the utility companies do not waive or release any easement or easement rights which may have been granted by prior plat, replat or other document and which are not shown on this plat.

Easements for electric transformers/switchgears, as installed, shall extend ten feet (10') in front of transformer/switchgear doors and five feet (5') on each side.

N

40' 20' 0 40' 80'
SCALE: 1" = 40'

ALDRICH LAND SURVEYING
P.O. BOX 30701, ALBQ., N.M. 87190
505-884-1990

Dwg: base.dwg	Drawn: STEPHEN	Checked: ALS	Sheet 2 of 3
Scale: AS SHOWN	Date: 06/12/03	Job: A03047	

2004049521 6063811 Page: 1 of 3 04/15/2004 12:10P Mary Herrera Bern. Co. PLAT R 17.00 Bk-2004C Pg-122

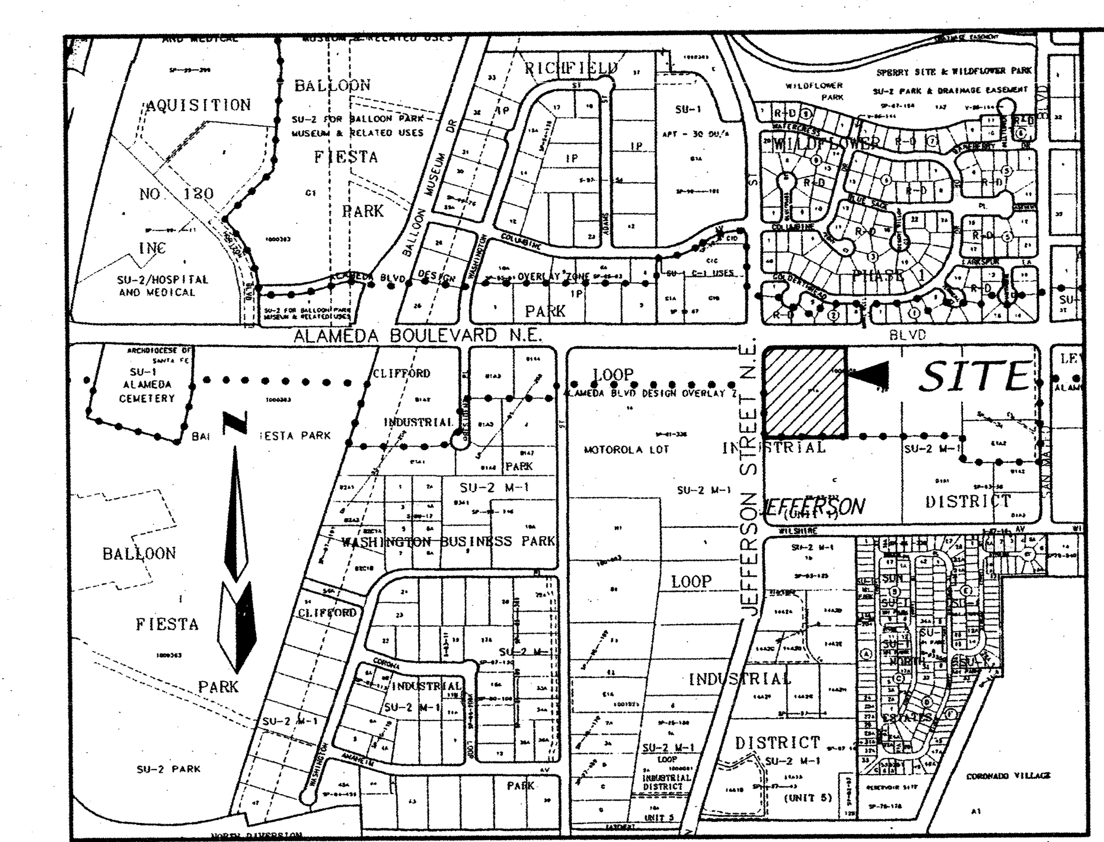

LOCATION MAP

ZONE ATLAS C-17-Z
SCALE: NONE

SUBDIVISION DATA

Plat Case No's.	Project # 1000658 Case # 03 DRB-01303
Gross acreage	5.0000 AC
Zone Atlas No.	C-17-Z
No. of existing Tracts/Lots	1 TRACT
No. of Tracts/Lots created	5 TRACTS
No. of Tracts/Lots eliminated	1 TRACT
Miles of full width streets created	0.0
Area dedicated to the City of Albuquerque	0.0
Date of Survey	APRIL, 2003
Zone	SU-1,M-1

FREE CONSENT AND DEDICATION:

The subdivision hereon described is with the free consent and in accordance with the desires of the undersigned owner(s) and/or proprietor(s) thereof and said owner(s) and/or proprietor(s) do hereby grant: all access, utility and drainage easements shown hereon including the right to construct, operate, inspect, and maintain facilities therein; and all public utility easements shown hereon for the common and joint use of gas, electrical power and communication services for buried distribution lines, conduits, and pipes for underground utilities where shown or indicated, and including the right of ingress and egress for construction and maintenance, and the right to trim interfering trees and shrubs. Said owner(s) and/or proprietor(s) do hereby consent to all of the foregoing and do hereby certify that this subdivision is their free act and deed. Said owner(s) warrant that they hold among them complete and indefeasible title to the land subdivided.

Otono Partners, LLC

[signature] 5/14/03 4/12/04
Knight Seavey, Manager, DATE

OWNER'S ACKNOWLEDGMENT

STATE OF NEW MEXICO
SS
COUNTY OF BERNALILLO

This instrument was acknowledged before me on May 14, 2003
By Knight Seavey, Manager, Otono Partners, LLC a New Mexico Corporation on behalf of said corporation

OFFICIAL SEAL BERNADETTE MARES NOTARY PUBLIC-STATE OF NEW MEXICO My commission expires: 2/14/05

[signature]
NOTARY PUBLIC MY COMMISSION EXPIRES

PURPOSE OF THIS CORRECTION PLAT

IS TO CHANGE THE 20' PUBLIC SANITARY SEWER EASEMENT DESIGNATION TO 20' PRIVATE SANITARY SEWER EASEMENT AND THE 30' PUBLIC WATERLINE AND SANITARY SEWER EASEMENT TO A 15' PUBLIC WATERLINE EASMENT AND A 15' PRIVATE SANITARY SEWER EASEMENT AND ALSO TO IDENTIFY THE BENEFICIARIES OF THE PRIVATE SANITARY SEWER EASEMNTS.

LEGAL DESCRIPTION

A tract of land situate within the Elena Gallegos Grant, projected Section 14, Township 11 North, Range 3 East, New Mexico Principal Meridian, City of Albuquerque, Bernalillo County, New Mexico being all of TRACT F-1-A, LOOP INDUSTRIAL DISTRICT, UNIT 1 as the same is shown and designated on said plat filed for record in the office of the County Clerk of Bernalillo County, New Mexico on July 21, 2000 in Book 2000C, Page 189 and containing 5.0000 acres more or less.

NOTES

PURPOSE OF PLAT

1. Subdivide Tract F-1-A and T-3, LOOP INDUSTRIAL DISTRICT, UNIT 1 into five Tracts
2. Grant easements as shown.

FREE CONSENT AND DEDICATION:

The subdivision hereon described is with the free consent and in accordance with the desires of the undersigned owner(s) and/or proprietor(s) thereof and said owner(s) and/or proprietor(s) do hereby grant: all access, utility and drainage easements shown hereon including the right to construct, operate, inspect, and maintain facilities therein; and all public utility easements shown hereon for the common and joint use of gas, electrical power and communication services for buried distribution lines, conduits, and pipes for underground utilities where shown or indicated, and including the right of ingress and egress for construction and maintenance, and the right to trim interfering trees and shrubs. Said owner(s) and/or proprietor(s) do hereby consent to all of the foregoing and do hereby certify that this subdivision is their free act and deed. Said owner(s) warrant that they hold among them complete and indefeasible title to the land subdivided.

Secured Partners, LLC
[signature] 4.12.04
Joseph Kopczynski, Managing Partner, DATE

OWNER'S ACKNOWLEDGMENT

STATE OF NEW MEXICO
SS
COUNTY OF BERNALILLO

This instrument was acknowledged before me on April 12, 2004
By Joseph Kopczynski, Managing Partner, Secured Partners, LLC a New Mexico Limited Liability Company on behalf of said Company

Barbara Edmonds 5/1/06
NOTARY PUBLIC MY COMMISSION EXPIRES

OWNER'S ACKNOWLEDGMENT

STATE OF NEW MEXICO
SS
COUNTY OF BERNALILLO

This instrument was acknowledged before me on APRIL 12, 2004
By Knight Seavey, Manager, Otono Partners, LLC a New Mexico Corporation on behalf of said corporation

[signature]
NOTARY PUBLIC

10-09-2004
MY COMMISSION EXPIRES

THIS IS TO CERTIFY THAT TAXES ARE CURRENT AND PAID ON UPC #: 101706438338011620
PROPERTY OWNER OF RECORD: OTONO PARTNER LLC
BERNALILLO COUNTY TREASURER'S OFFICE: [signature] 4/14/04

THIS IS TO CERTIFY THAT TAXES ARE CURRENT AND PAID ON UPC #: 101706438338011620
PROPERTY OWNER OF RECORD: OTONO Partners LLC
BERNALILLO COUNTY TREASURER'S OFFICE: [signature] 14 Aug 03

CORRECTION PLAT FOR
TRACTS F-1-A-1 THRU F-1-A-5 LOOP INDUSTRIAL DISTRICT UNIT 1
WITHIN THE
ELENA GALLEGOS GRANT
PROJECTED SECTIONS 14
TOWNSHIP 11 NORTH, RANGE 3 EAST, NMPM
CITY OF ALBUQUERQUE
BERNALILLO COUNTY, NEW MEXICO
APRIL, 2003

APPROVED AND ACCEPTED BY:

APPROVAL AND CONDITIONAL ACCEPTANCE as specified by the Albuquerque subdivision Ordinance, Chapter 14 Article 14 of the Revised Ordinances of Albuquerque, New Mexico, 1994.

Project Number: 1000658

Application Number: 03 DRB-01303

PLAT APPROVAL

Utility Approvals:

PNM Electric Services	6-16-03 Date
PNM Gas Services	6-16-03 Date
Qwest Telecommunications	6-13-03 Date
Comcast	6-16-03 Date

City Approvals:

GBH 4-14-04 City Surveyor	5-20-03 Date
Traffic Engineering, Transportation Division	8-13-03 Date
Utilities Development	8-14-03 Date
Parks and Recreation Department	8/13/03 Date
AMAFCA	8-13-03 Date
City Engineer	8/13/03 Date
4/14 DRB Chairperson, Planning Department	8/15/03 Date

SURVEYOR'S CERTIFICATION

"I, Timothy Aldrich, a duly qualified Registered Professional Land Surveyor under the laws of the State of New Mexico, do hereby certify that this plat and description were prepared by me or under my supervision, shows all easements as shown on the plat of record or made known to me by the owners and/or proprietors of the subdivision shown hereon, utility companies and other parties expressing an interest and meets the minimum requirements for monumentation and surveys of the Albuquerque Subdivision Ordinance, and further meets the Minimum Standards for Land Surveying in the State of New Mexico, and is true and correct to the best of my knowledge and belief."

[signature] 05-20-03
Timothy Aldrich P.S. No. 7719 Date

ALDRICH LAND SURVEYING
P.O. BOX 30701, ALBQ., N.M. 87190
505-884-1990

Dwg: base.dwg	Drawn: STEPHEN	Checked: ALS	Sheet 1 of 3
Scale: AS SHOWN	Date: 05/14/03	Job: A03047	

SHEET 2 OF 9

SCANNED BY MESA REPRO

PLAT FOR
TRACTS F-1-A-1 THRU F-1-A-5 LOOP INDUSTRIAL DISTRICT UNIT 1

WITHIN THE
ELENA GALLEGOS GRANT
PROJECTED SECTIONS 14
TOWNSHIP 11 NORTH, RANGE 3 EAST, NMPM
CITY OF ALBUQUERQUE
BERNALILLO COUNTY, NEW MEXICO
APRIL, 2003

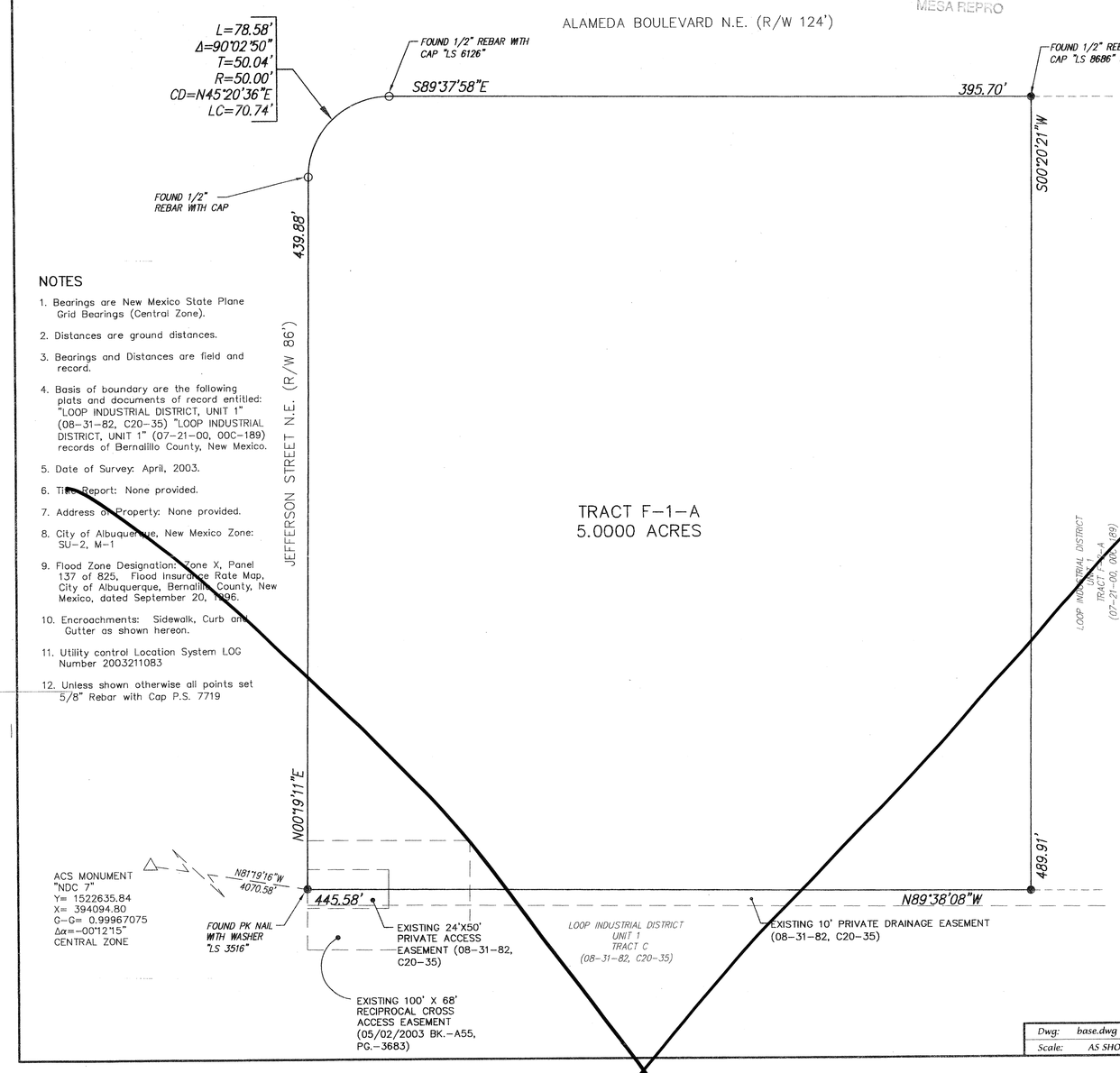

NOTES

1. Bearings are New Mexico State Plane Grid Bearings (Central Zone).
2. Distances are ground distances.
3. Bearings and Distances are field and record.
4. Basis of boundary are the following plats and documents of record entitled: "LOOP INDUSTRIAL DISTRICT, UNIT 1" (08-31-82, C20-35) "LOOP INDUSTRIAL DISTRICT, UNIT 1" (07-21-00, 00C-189) records of Bernalillo County, New Mexico.
5. Date of Survey: April, 2003.
6. Title Report: None provided.
7. Address of Property: None provided.
8. City of Albuquerque, New Mexico Zone: SU-2, M-1
9. Flood Zone Designation: Zone X, Panel 137 of 825, Flood Insurance Rate Map, City of Albuquerque, Bernalillo County, New Mexico, dated September 20, 1996.
10. Encroachments: Sidewalk, Curb and Gutter as shown hereon.
11. Utility control Location System LOG Number 2003211083
12. Unless shown otherwise all points set 5/8" Rebar with Cap P.S. 7719

PUBLIC UTILITY EASEMENTS:

PUBLIC UTILITY EASEMENTS shown on this plat are granted for the common and joint use of :

1. The PNM Electric Services Division for the installation, maintenance and service of overhead and underground electrical lines, communication lines, transformers, poles and any other equipment, fixtures structures and related facilities reasonably necessary to provide electrical services.

2. The PNM Gas Services Division for installation, maintenance and services of natural gas lines, valves and other equipment and facilities reasonably necessary to provide natural gas.

3. Qwest for installation, maintenance and service of all buried and aerial communication lines and other related equipment and facilities reasonably necessary to provide communication services, including but not limited to above ground pedestals and closures.

4. Comcast cable for installation, maintenance and service of such lines, cable and other related equipment and facilities reasonably necessary to provide Cable TV service.

5. The New Mexico Utilities, Inc., for the installation, maintenance and service of water and sanitary sewer lines and any other equipment, fixtures, structures and related facilities reasonably necessary to provide water and sewer services.

Included is the right to build, rebuild, construct, reconstruct, locate, relocate, change, remove, modify, renew, operate and maintain facilities for the purposes described above, together with free access to, from and over said easement, including sufficient working area space for electric transformers, with the right and privilege to trim and remove trees, shrubs or bushes which interfere with the purposes set forth herein. No building, sign, pool (above ground or subsurface), hot tub, concrete or wood pool decking, or other structure shall be erected or constructed on said easements, nor shall any well be drilled or operated thereon. Property owners shall be solely responsible for correcting any violations of National Electrical Safety Code caused by construction of pools, decking or any structures adjacent to within or near easements shown on this plat.

In approving this plat, the utility companies did not conduct a Title Search of the properties shown hereon. Consequently, the utility companies do not waive or release any easement or easement rights which may have been granted by prior plat, replat or other document and which are not shown on this plat.

Easements for electric transformers/switchgears, as installed, shall extend ten feet (10') in front of transformer/switchgear doors and five feet (5') on each side.

N

40' 20' 0 40' 80'
SCALE: 1" = 40'

ALDRICH LAND SURVEYING
P.O. BOX 30701, ALBQ., N.M. 87190
505-884-1990

Dwg: base.dwg	Drawn: STEPHEN	Checked: ALS	Sheet 2 of 3
Scale: AS SHOWN	Date: 06/12/03	Job: A03047	

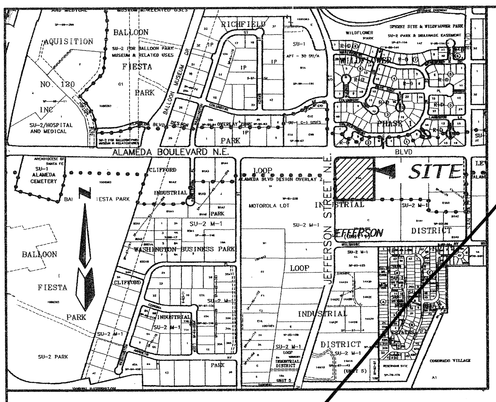

LOCATION MAP

ZONE ATLAS C-17-Z
SCALE: NONE

SUBDIVISION DATA

Plat Case No's. ..... Project # 1000658
Case #

Gross acreage ..... 5.0000 AC
Zone Atlas No. C-17-Z
No. of existing Tracts/Lots ..... 1 TRACT
No. of Tracts/Lots created ..... 5 TRACTS
No. of Tracts/Lots eliminated ..... 1 TRACT
Miles of full width streets created 0.0
Area dedicated to the City of Albuquerque 0.0
Date of Survey ..... APRIL, 2003
Zone SU-1,M-1

FREE CONSENT AND DEDICATION:

The subdivision hereon described is with the free consent and in accordance with the desires of the undersigned owner(s) and/or proprietor(s) thereof and said owner(s) and/or proprietor(s) do hereby grant: all access, utility and drainage easements shown hereon including the right to construct, operate, inspect, and maintain facilities therein; and all public utility easements shown hereon for the common and joint use of gas, electrical power and communication services for buried distribution lines, conduits, and pipes for underground utilities where shown or indicated, and including the right of ingress and egress for construction and maintenance, and the right to trim interfering trees and shrubs. Said owner(s) and/or proprietor(s) do hereby consent to all of the foregoing and do hereby certify that this subdivision is their free act and deed. Said owners(s) warrant that they hold among them complete and indefeasible title to the land subdivided.

Otono Partners, LLC

Knight Seavey, Manager, 5/14/03 DATE

OWNER'S ACKNOWLEDGMENT

STATE OF NEW MEXICO
SS
COUNTY OF BERNALILLO

This instrument was acknowledged before me on May 14, 2003
By Knight Seavey, Manager, Otono Partners, LLC a New Mexico Corporation on behalf of said corporation

OFFICIAL SEAL
BERNADETTE MARES
NOTARY PUBLIC-STATE OF NEW MEXICO
My commission expires 2/14/05

NOTARY PUBLIC MY COMMISSION EXPIRES

LEGAL DESCRIPTION

A tract of land situate within the Elena Gallegos Grant, projected Section 14, Township 11 North, Range 3 East, New Mexico Principal Meridian, City of Albuquerque, Bernalillo County, New Mexico being all of TRACT F-1-A, LOOP INDUSTRIAL DISTRICT, UNIT 1 as the same is shown and designated on said plat filed for record in the office of the County Clerk of Bernalillo County, New Mexico on July 21, 2000 in Book 2000C, Page 189 and containing 5.0000 acres more or less.

NOTES

PURPOSE OF PLAT

1. Subdivide Tract F-1-A and T-3, LOOP INDUSTRIAL DISTRICT, UNIT 1 into five Tracts
2. Grant easements as shown.

PLAT FOR
TRACTS F-1-A-1 THRU F-1-A-5 LOOP INDUSTRIAL DISTRICT UNIT 1
WITHIN THE
ELENA GALLEGOS GRANT
PROJECTED SECTIONS 14
TOWNSHIP 11 NORTH, RANGE 3 EAST, NMPM
CITY OF ALBUQUERQUE
BERNALILLO COUNTY, NEW MEXICO
APRIL, 2003

APPROVED AND ACCEPTED BY:

APPROVAL AND CONDITIONAL ACCEPTANCE as specified by the Albuquerque subdivision Ordinance, Chapter 14 Article 14 of the Revised Ordinances of Albuquerque, New Mexico, 1994.

Project Number: 1000658

Application Number: _____

PLAT APPROVAL

Utility Approvals:

PNM Electric Services	6-16-03 Date
PNM Gas Services	6-16-03 Date
Qwest Telecommunications	6-13-03 Date
Comcast	6-16-03 Date

City Approvals:

City Surveyor	5-20-03 Date
Traffic Engineering, Transportation Division	Date
Utilities Development	Date
Parks and Recreation Department	Date
AMAFCA	Date
City Engineer	Date
DRB Chairperson, Planning Department	Date

SURVEYOR'S CERTIFICATION

"I, Timothy Aldrich, a duly qualified Registered Professional Land Surveyor under the laws of the State of New Mexico, do hereby certify that this plat and description were prepared by me or under my supervision, shows all easements as shown on the plat of record or made known to me by the owners and/or proprietors of the subdivision shown hereon, utility companies and other parties expressing an interest and meets the minimum requirements for monumentation and surveys of the Albuquerque Subdivision Ordinance, and further meets the Minimum Standards for Land Surveying in the State of New Mexico, and is true and correct to the best of my knowledge and belief."

Timothy Aldrich P.S. No. 7719 05-20-03 Date

NEW MEXICO 7719 REGISTERED PROFESSIONAL SURVEYOR

ALDRICH LAND SURVEYING
P.O. BOX 30701, ALBQ., N.M. 87190
505-884-1990

Dwg: base.dwg	Drawn: STEPHEN	Checked: ALS	Sheet 1 of 3
Scale: AS SHOWN	Date: 05/14/03	Job: A03047	

SHEET 2 of 3

\A03,08S\a3047ota\Final Plat\base.dwg 05/14/03 11:00 AM, stephen

2004045021
006361
Page: 3 of 3
04/15/2004 12:16P
Bern. Co. PLAT R 17.00 BK-2004C Pg-122

CORRECTION PLAT FOR
TRACTS F-1-A-1 THRU F-1-A-5 LOOP INDUSTRIAL DISTRICT UNIT 1
WITHIN THE
ELENA GALLEGOS GRANT
PROJECTED SECTIONS 14
TOWNSHIP 11 NORTH, RANGE 3 EAST, NMPM
CITY OF ALBUQUERQUE
BERNALILLO COUNTY, NEW MEXICO
APRIL, 2003

SHEET 3 of 9

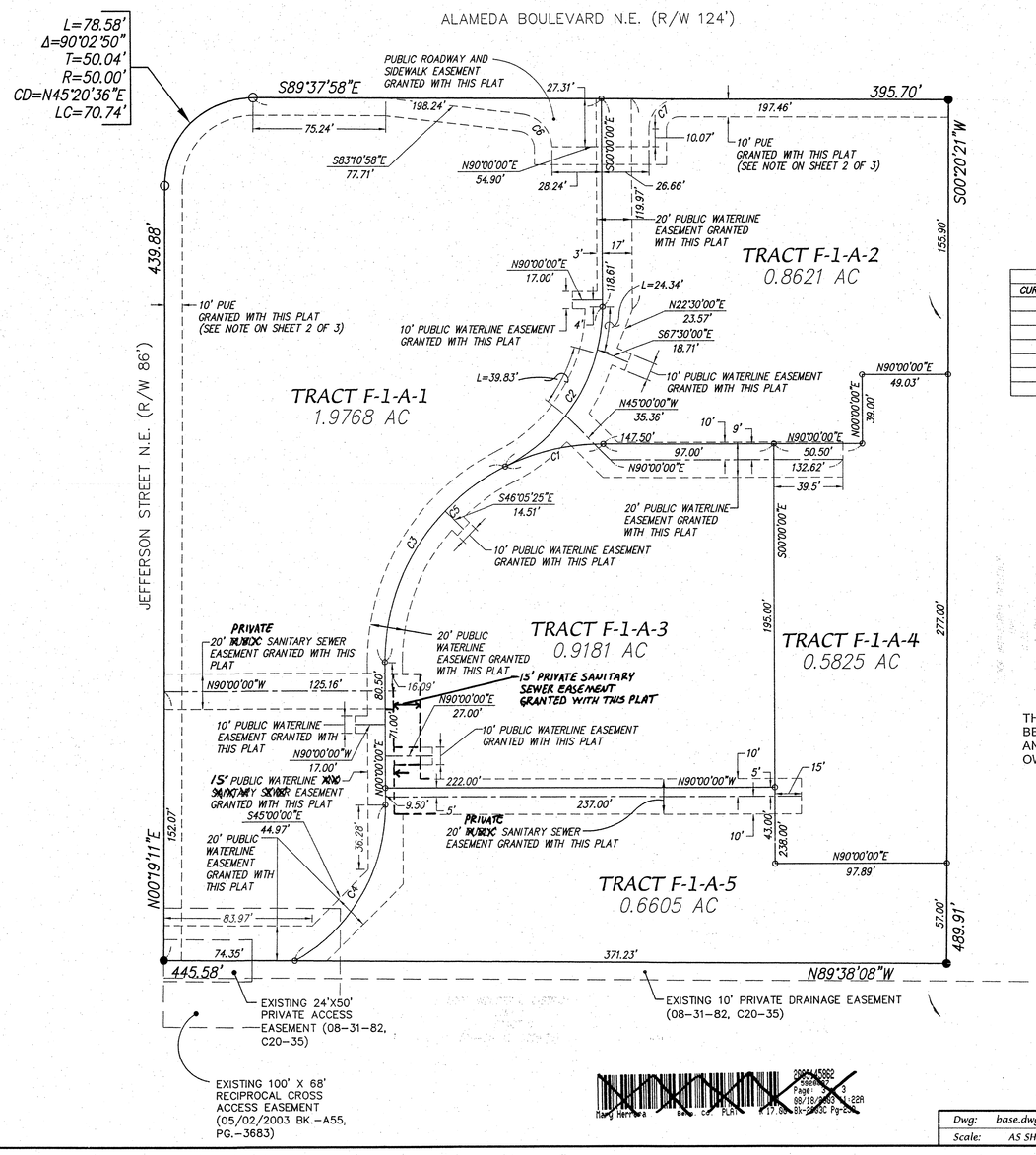

CURVE TABLE						
CURVE	LENGTH	RADIUS	DELTA	TANGENT	CH-BEARING	CH-DIST
C1	57.74	124.01	26°40'36"	29.40	S77°07'14"W	57.22
C2	111.64	101.92	62°45'40"	62.17	N31°42'02"E	106.15
C3	138.30	124.01	63°53'59"	77.34	S31°49'56"W	131.24
C4	107.11	101.02	60°45'07"	59.21	N30°22'55"E	102.16
C5	195.78	124.01	90°27'32"	125.00	N45°13'46"E	176.07
C6	28.05	20.00	80°21'28"	16.89	S43°00'13"E	25.81
C7	26.81	17.00	90°22'02"	17.11	N45°11'01"E	24.12

A RECIPROCAL CROSS-LOT ACCESS EASEMENT, A PRIVATE CROSS-LOT DRAINAGE EASEMENT AND A PRIVATE CROSS-LOT UTILITY EASEMENT ACROSS TRACTS F-1-A-1 THRU F-1-A-5 FOR BENEFITS OF THE OWNERS OF TRACTS F-1-A-1 THRU F-1-A-5, AND TO BE JOINTLY MAINTAINED BY SAID OWNERS GRANTED BY THIS PLAT

REFERENCE SITE PLAN 03DRB00787

THE PRIVATE SANITARY SEWER EASEMENTS ARE FOR THE BENFIT OF THE ONWERS OF TRACTS F-1-A-1, F-1-A-3, F-1-A-4 AND F-1-A-5 AND ARE TO BE JOINTLY MAINTAINED BY SAID OWNERS GRANTED BY THIS PLAT.

N

40' 20' 0 40' 80'
SCALE: 1" = 40'

ALDRICH LAND SURVEYING
P.O. BOX 30701, ALBQ., N.M. 87190
505-884-1990

Dwg: base.dwg	Drawn: STEPHEN	Checked: ALS	Sheet 3 of 3
Scale: AS SHOWN	Date: 08/13/03	Job: A03047	

SCANNED BY MEGA REPRO

SCANNED BY
MEGA REPRO

PLAT FOR
TRACTS F-1-A-1 THRU F-1-A-5 LOOP INDUSTRIAL DISTRICT UNIT 1

WITHIN THE
ELENA GALLEGOS GRANT
PROJECTED SECTIONS 14
TOWNSHIP 11 NORTH, RANGE 3 EAST, NMPM
CITY OF ALBUQUERQUE
BERNALILLO COUNTY, NEW MEXICO
APRIL, 2003

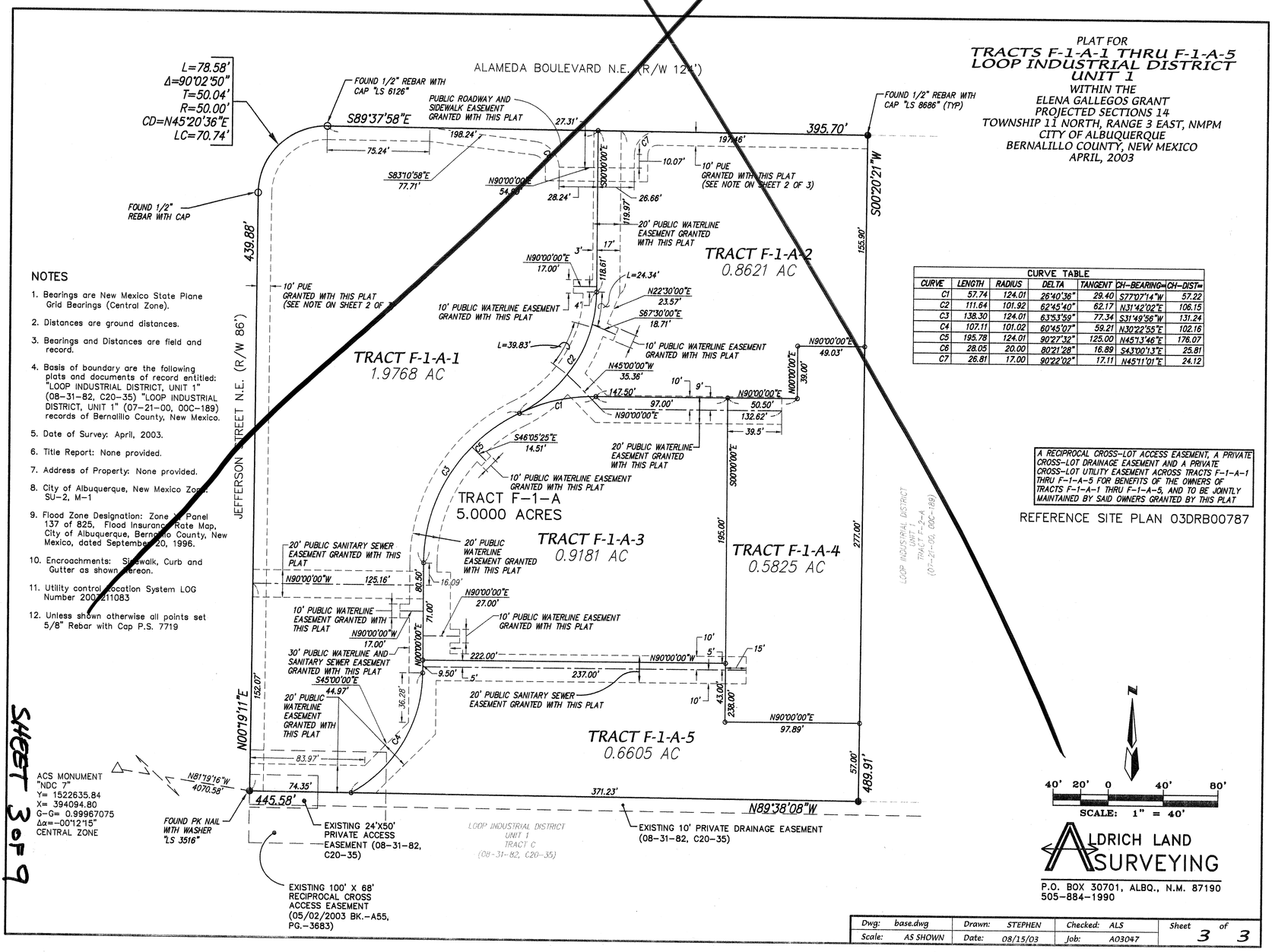

NOTES

1. Bearings are New Mexico State Plane Grid Bearings (Central Zone).
2. Distances are ground distances.
3. Bearings and Distances are field and record.
4. Basis of boundary are the following plats and documents of record entitled: "LOOP INDUSTRIAL DISTRICT, UNIT 1" (08-31-82, C20-35) "LOOP INDUSTRIAL DISTRICT, UNIT 1" (07-21-00, 00C-189) records of Bernalillo County, New Mexico.
5. Date of Survey: April, 2003.
6. Title Report: None provided.
7. Address of Property: None provided.
8. City of Albuquerque, New Mexico Zone: SU-2, M-1
9. Flood Zone Designation: Zone X Panel 137 of 825, Flood Insurance Rate Map, City of Albuquerque, Bernalillo County, New Mexico, dated September 20, 1996.
10. Encroachments: Sidewalk, Curb and Gutter as shown hereon.
11. Utility control location System LOG Number 2002211083
12. Uniess shown otherwise all points set 5/8" Rebar with Cap P.S. 7719

CURVE TABLE						
CURVE	LENGTH	RADIUS	DELTA	TANGENT	CH-BEARING=	CH-DIST=
C1	57.74	124.01	26°40'36"	29.40	S77°07'14"W	57.22
C2	111.64	101.92	62°45'40"	62.17	N31°42'02"E	106.15
C3	138.30	124.01	63°53'59"	77.34	S31°49'56"W	131.24
C4	107.11	101.02	60°45'07"	59.21	N30°22'55"E	102.16
C5	195.78	124.01	90°27'32"	125.00	N45°13'46"E	176.07
C6	28.05	20.00	80°21'28"	16.89	S43°00'13"E	25.81
C7	26.81	17.00	90°22'02"	17.11	N45°11'01"E	24.12

A RECIPROCAL CROSS-LOT ACCESS EASEMENT, A PRIVATE CROSS-LOT DRAINAGE EASEMENT AND A PRIVATE CROSS-LOT UTILITY EASEMENT ACROSS TRACTS F-1-A-1 THRU F-1-A-5 FOR BENEFITS OF THE OWNERS OF TRACTS F-1-A-1 THRU F-1-A-5, AND TO BE JOINTLY MAINTAINED BY SAID OWNERS GRANTED BY THIS PLAT

REFERENCE SITE PLAN 03DRB00787

SCALE: 1" = 40'

ALDRICH LAND SURVEYING
P.O. BOX 30701, ALBQ., N.M. 87190
505-884-1990

Dwg: base.dwg	Drawn: STEPHEN	Checked: ALS	Sheet 3 of 3
Scale: AS SHOWN	Date: 08/15/03	Job: A03047	

SHEET 3 of 9

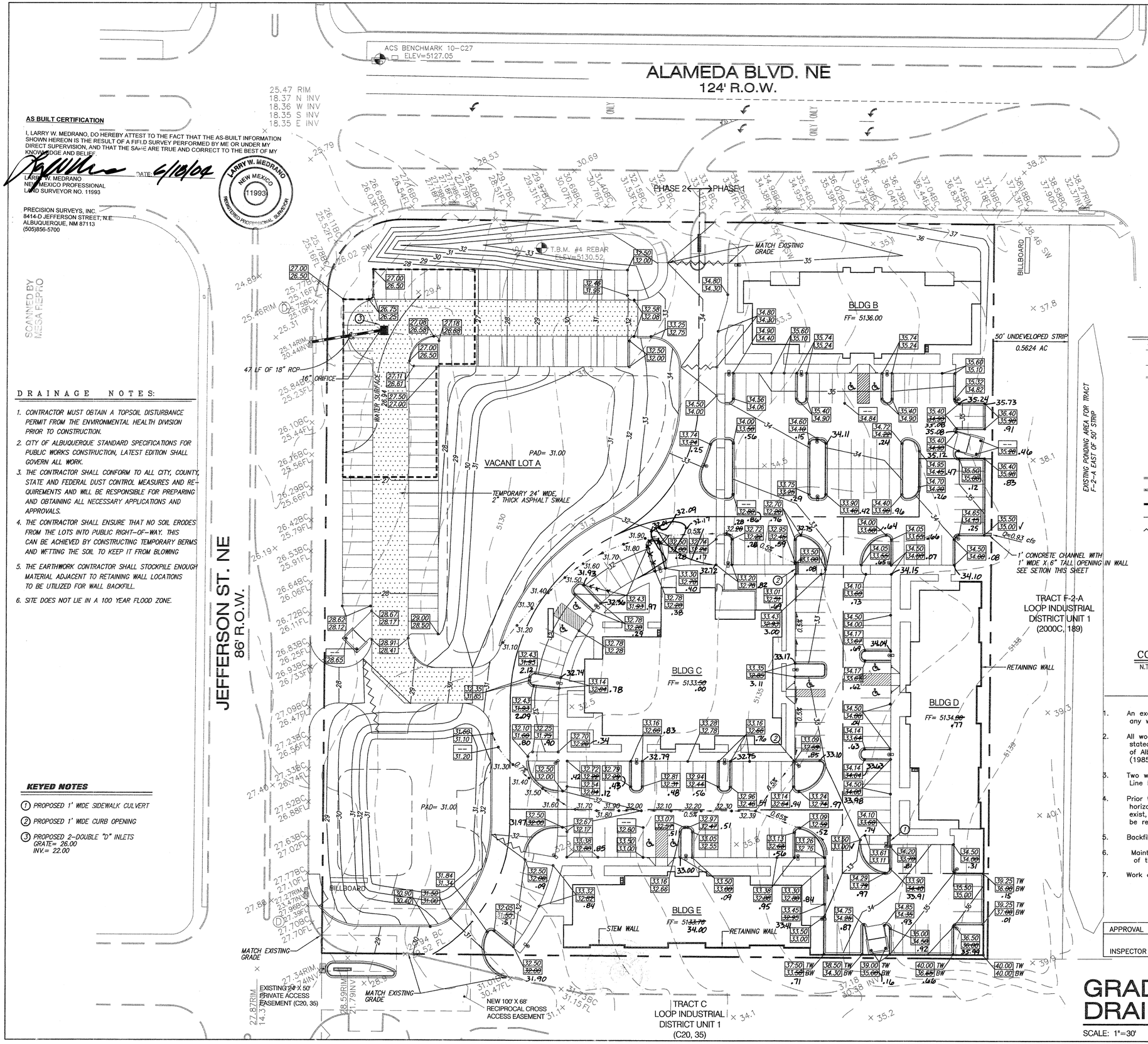

AS BUILT CERTIFICATION

I, LARRY W. MEDRANO, DO HEREBY ATTEST TO THE FACT THAT THE AS-BUILT INFORMATION SHOWN HEREON IS THE RESULT OF A FIELD SURVEY PERFORMED BY ME OR UNDER MY DIRECT SUPERVISION, AND THAT THE SAME ARE TRUE AND CORRECT TO THE BEST OF MY KNOWLEDGE AND BELIEF.

DATE 6/10/04

LARRY W. MEDRANO
NEW MEXICO PROFESSIONAL
LAND SURVEYOR NO. 11993

LARRY W. MEDRANO NEW MEXICO 11993 REGISTERED PROFESSIONAL SURVEYOR

PRECISION SURVEYS, INC.
8414-D JEFFERSON STREET, N.E.
ALBUQUERQUE, NM 87113
(505)856-5700

SCANNED BY MESA REPRO

DRAINAGE NOTES:

1. CONTRACTOR MUST OBTAIN A TOPSOIL DISTURBANCE PERMIT FROM THE ENVIRONMENTAL HEALTH DIVISION PRIOR TO CONSTRUCTION.
2. CITY OF ALBUQUERQUE STANDARD SPECIFICATIONS FOR PUBLIC WORKS CONSTRUCTION, LATEST EDITION SHALL GOVERN ALL WORK.
3. THE CONTRACTOR SHALL CONFORM TO ALL CITY, COUNTY, STATE AND FEDERAL DUST CONTROL MEASURES AND REQUIREMENTS AND WILL BE RESPONSIBLE FOR PREPARING AND OBTAINING ALL NECESSARY APPLICATIONS AND APPROVALS.
4. THE CONTRACTOR SHALL ENSURE THAT NO SOIL ERODES FROM THE LOTS INTO PUBLIC RIGHT-OF-WAY. THIS CAN BE ACHIEVED BY CONSTRUCTING TEMPORARY BERMS AND WETTING THE SOIL TO KEEP IT FROM BLOWING
5. THE EARTHWORK CONTRACTOR SHALL STOCKPILE ENOUGH MATERIAL ADJACENT TO RETAINING WALL LOCATIONS TO BE UTILIZED FOR WALL BACKFILL.
6. SITE DOES NOT LIE IN A 100 YEAR FLOOD ZONE.

KEYED NOTES

1. PROPOSED 1' WIDE SIDEWALK CULVERT
2. PROPOSED 1' WIDE CURB OPENING
3. PROPOSED 2-DOUBLE "D" INLETS
   GRATE= 26.00
   INV.= 22.00

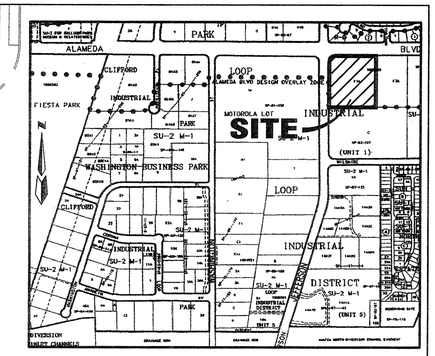

VICINITY MAP ZONE MAP: C17

LEGAL DESCRIPTION

TRACT F-1-A, LOOP INDUSTRIAL DISTRICT, UNIT1.

LEGEND

5320	EXISTING CONTOUR MAJOR
5321	EXISTING CONTOUR MINOR
	EXISTING CURB
00.0	EXISTING GROUND ELEVATION
+00.00	EXISTING FINISHED SURFACE ELEVATION
+00.00 BC	EXISTING BACK OF CURB ELEVATION
+00.00 FL	EXISTING FLOWLINE ELEVATION
01.00 ~~00.00~~	AS BUILT ~~PROPOSED~~ SPOT ELEVATION
25.15 ~~24.65~~	PROPOSED TOP OF CURB ELEVATION ~~PROPOSED~~ FLOWLINE ELEVATION
24.35	AS BUILT ~~PROPOSED~~ HEADER CURB
	EXISTING STEM WALL
	PROPOSED RETAINING WALL
25	PROPOSED CONTOUR LINE
	PROPOSED WATERBLOCK

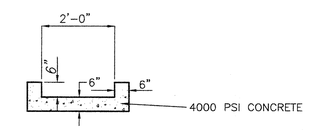

CONCRETE SWALE SECTION
N.T.S.

NOTICE TO CONTRACTOR

1. An excavation/construction permit will be required before beginning any work within City right of way.
2. All work detailed on these plans to be performed, except as otherwise stated or provided hereon, shall be constructed in accordance with "City of Albuquerque Standard Specifications for Public Works Construction" (1985 Edition).
3. Two working days prior to any excavation, Contractor must contact the Line Locating Service, 765-1234, for location of existing utilities.
4. Prior to construction, the Contractor shall excavate and verify the horizontal and vertical locations of all obstructions. Should a conflict exist, the Contractor shall notify the Engineer so that the conflict can be resolved with a minimum amount of delay.
5. Backfill compaction shall be according to traffic/street use.
6. Maintenance of these facilities shall be the responsibility of the Owner of the property served.
7. Work on arterial streets shall be performed on a 24 hour basis.

APPROVAL	NAME	DATE
INSPECTOR		

GRADING & DRAINAGE PLAN

SCALE: 1"=30'

INSITE WORKS

ADDRESS	57 ROCK POINT PLACE NE ALBUQUERQUE, NM 87122
TELEPHONE	(505) 858-0100
FAX	(505) 858-1099
WEBSITE	www.insiteworks.com
KS email	knight@insiteworks.com
JC email	jud@insiteworks.com
CONTRACTOR	CONTRACTOR
	XXXXXXXXXXXXXXXX
	XXXXXXXXXXXXXXXX
TELEPHONE	XXXXXXXXXXXXXXXX
FAX	XXXXXXXXXXXXXXXX

THIS DRAWING IS THE PROPERTY OF INSITEWORKS AND SHALL NOT BE REPRODUCED OR USED IN ANY WAY WITHOUT EXPRESSED WRITTEN CONSENT

dmg MARK GOODWIN & ASSOCIATES, P.A. CONSULTING ENGINEERS
P.O. BOX 90606
ALBUQUERQUE, NEW MEXICO 87199
(505)828-2200, FAX (505)797-9539

TITLE	CONCEPTUAL GRADING & DRAINAGE PLAN
DATE ISSUED	3/22/03
UPDATED	00/00/00
EDITION	DD-PRICING
PROJECT ID	GTONO
FILE	A3047cgd.dwg
FILE PATH	A03jobs\A3047eto
CREATED BY	DER
SCALE	1" = 30'
DISCIPLINE	CIVIL
CONSULTANT	INSITEWORKS

JEFFREY JAMES GARCIA NEW MEXICO 11020 REGISTERED PROFESSIONAL ENGINEER 7-11-03

C301

SHEET 4 OF 9

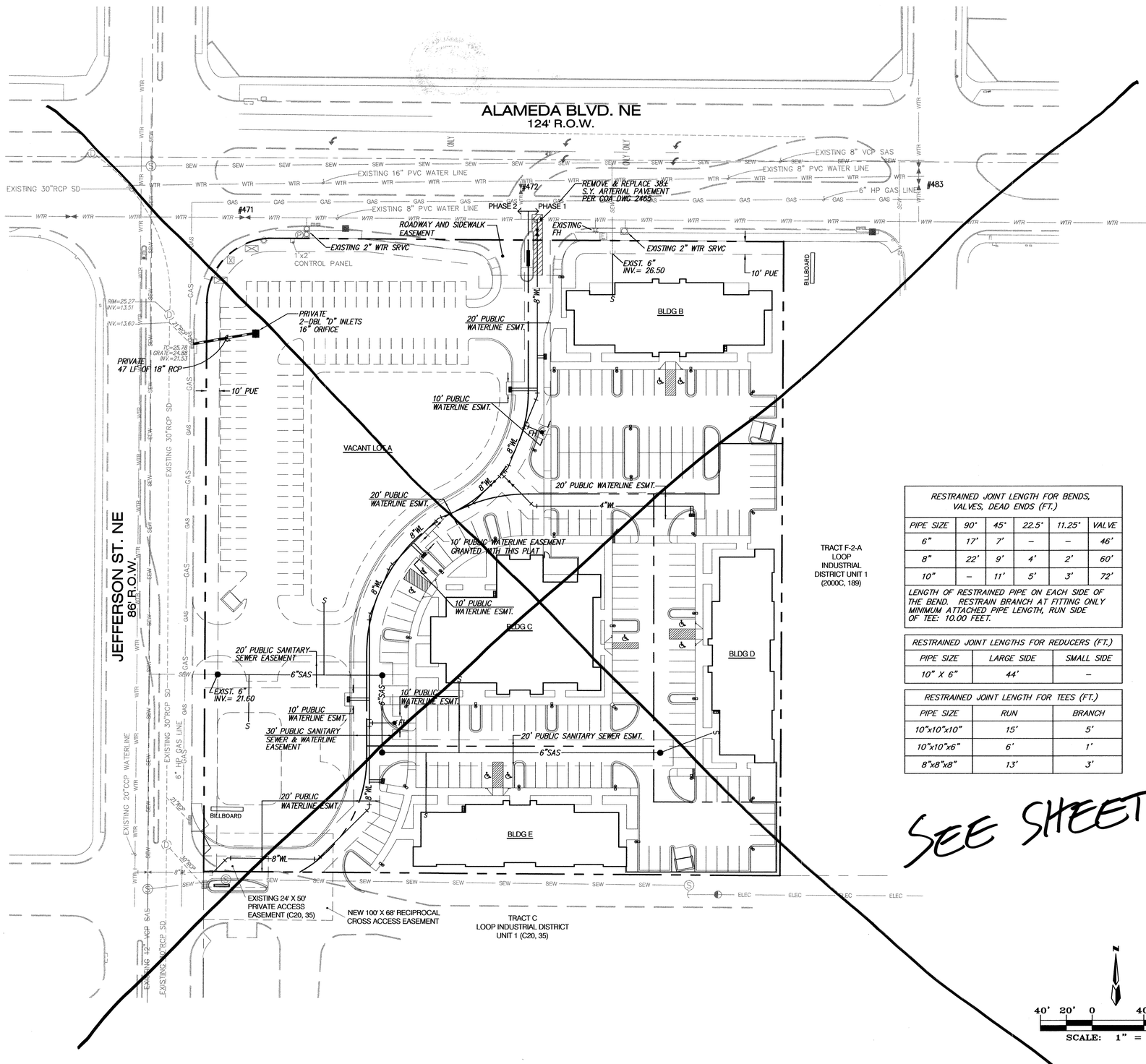

SEE SHEET 5A

GENERAL NOTES

NOTICE TO CONTRACTORS

1. AN EXCAVATION/CONSTRUCTION PERMIT WILL BE REQUIRED BEFORE BEGINNING ANY WORK WITHIN THE CITY RIGHT-OF-WAY.
2. ALL WORK DETAILED ON THESE PLANS TO BE PERFORMED UNDER CONTRACT SHALL, EXCEPT AS OTHERWISE STATED OR PROVIDED FOR HEREON, BE CONSTRUCTED IN ACCORDANCE WITH THE CITY OF ALBUQUERQUE STANDARD SPECIFICATIONS FOR PUBLIC WORKS CONSTRUCTION, 1986 EDITION AS REVISED THROUGH UPDATE #6.
3. TWO WORKING DAYS PRIOR TO ANY EXCAVATION, THE CONTRACTOR MUST CONTACT NEW MEXICO ONE CALL SYSTEM (260-1990) FOR LOCATION OF EXISTING UTILITIES.
4. PRIOR TO CONSTRUCTION, THE CONTRACTOR SHALL EXCAVATE AND VERIFY THE HORIZONTAL AND VERTICAL LOCATIONS OF ALL OBSTRUCTIONS. SHOULD A CONFLICT EXIST, THE CONTRACTOR SHALL NOTIFY THE ENGINEER IMMEDIATELY SO THAT THE CONFLICT CAN BE RESOLVED WITH A MINIMUM AMOUNT OF DELAY.
5. CONTRACTOR SHALL COORDINATE WITH THE CITY OF ALBUQUERQUE WATER SYSTEMS DIVISION (857-8200) SEVEN (7) WORKING DAYS IN ADVANCE OF ANY WORK THAT MAY AFFECT EXISTING PUBLIC WATER OR SEWER UTILITIES. EXISTING VALVES TO BE OPERATED BY CITY PERSONNEL ONLY. CONTRACTOR SHALL CONTACT THE WATER SYSTEMS DIVISION SEVEN (7) WORKING DAYS PRIOR TO NEEDING VALVES TURNED ON OR OFF.
6. ALL EXCAVATION, TRENCHING AND SHORING ACTIVITIES MUST BE CARRIED-OUT IN ACCORDANCE WITH OSHA 29 CFR 1926.650 SUBPART P.

VALVE SHUT-OFF PLAN

1. CONTRACTOR WILL CONTACT WATER SYSTEMS AT 857-8200, SEVEN (7) DAYS PRIOR TO NECESSARY SHUT-OFF.
2. VALVES SHALL ONLY BE OPERATED BY CITY WATER EMPLOYEES SEE THIS SHEET FOR VALVE NUMBERS & LOCATIONS.
3. VALVE #'S 471, 472, 483 & 484 WILL NEED TO BE SHUT FOR THE TEE INSTALLATION.

RESTRAINED JOINT LENGTH FOR BENDS, VALVES, DEAD ENDS (FT.)

PIPE SIZE	90°	45°	22.5°	11.25°	VALVE
6"	17'	7'	–	–	46'
8"	22'	9'	4'	2'	60'
10"	–	11'	5'	3'	72'

LENGTH OF RESTRAINED PIPE ON EACH SIDE OF THE BEND. RESTRAIN BRANCH AT FITTING ONLY MINIMUM ATTACHED PIPE LENGTH, RUN SIDE OF TEE: 10.00 FEET.

RESTRAINED JOINT LENGTHS FOR REDUCERS (FT.)

PIPE SIZE	LARGE SIDE	SMALL SIDE
10" X 6"	44'	–

RESTRAINED JOINT LENGTH FOR TEES (FT.)

PIPE SIZE	RUN	BRANCH
10"x10"x10"	15'	5'
10"x10"x6"	6'	1'
8"x8"x8"	13'	3'

LEGEND

- WTR — EXISTING WATERLINE
- EXISTING FIRE HYDRANT
- SEW — EXISTING SANITARY SEWER LINE
- EXISTING SANITARY SEWER MANHOLE
- GAS — EXISTING GAS LINE
- EXISTING STORM SEWER LINE
- EXISTING STORM SEWER MANHOLE
- EXISTING STORM SEWER INLET
- EXISTING 2" WATER SERVICE
- 8"WL — PROPOSED WATERLINE
- FH — PROPOSED FIRE HYDRANT
- PROPOSED GATE VALVE
- PROPOSED 1" DOMESTIC & 1" IRRIGATION SERVICE
- 6"SAS — PROPOSED 6" SANITARY SEWER LINE
- PROPOSED 4' SANITARY SEWER MANHOLE
- S — PROPOSED 4" SANITARY SEWER SERVICE LINE
- PROPOSED STORM DRAIN LINE
- PROPOSED STORM DRAIN INLET

AS BUILT INFORMATION
CONTRACTOR Duncan Construction
WORK STAKED BY Precision Surveys, Inc. DATE 05/04
INSPECTOR'S ACCEPTANCE BY DATE
FIELD VERIFICATION BY Precision Surveys, Inc. DATE 05/04
DRAWINGS CORRECTED BY Precision Surveys, Inc. DATE 05/04
MICRO-FILM INFORMATION
RECORDED BY DATE
COA Inspector: Ron Rutledge

BENCH MARKS
ACS MONUMENT "NDC 7"
Y= 1522635.84
X= 394094.80
G-G= 0.99967075
Δα=-00°12'15"
CENTRAL ZONE
(NAD 1927)

SURVEY INFORMATION
FIELD NOTES
NO. BY DATE

ENGINEER'S SEAL
DESIGNED BY ROBERT A. GUIDRY NEW MEXICO PROFESSIONAL ENGINEER 11320 8-14-03

NO.	DATE	REMARKS	BY
		REVISIONS	
		DESIGN	

		DATE
DESIGNED BY	GK	07/03
DRAWN BY	ACH	07/03
CHECKED BY	DMG	07/03

dmg MARK GOODWIN & ASSOCIATES, P.A.
CONSULTING ENGINEERS
P.O. BOX 90606
ALBUQUERQUE, NEW MEXICO 87199
(505) 828-2200, FAX (505) 797-9539

CITY OF ALBUQUERQUE
PUBLIC WORKS DEPARTMENT

TITLE:
OTONO PLAZA MASTER UTILITY PLAN

DESIGN REVIEW COMMITTEE: APPROVED SEP - 9 2003 DESIGN REVIEW COMMITTEE
CITY ENGINEER APPROVAL: APPROVED OCT 22 2003 CITY ENGINEER
LAST DESIGN UPDATE | MO./DAY/YR. | MO./DAY/YR.

CITY PROJECT NO. 715481 | ZONE MAP NO. C-17 | SHEET 5 OF 9

A3047OTO/PLANS/A3047-MUTI/08-14-03/ACH

SCANNED BY MEGA REPRO
F:\A03JOBS\a3047oto\PLANS\A3047-MUTI.dwg Thu Aug 14 16:34:54 2003 D. MARK GOODWIN & ASSOCIATES, PLTTED BY: ACH

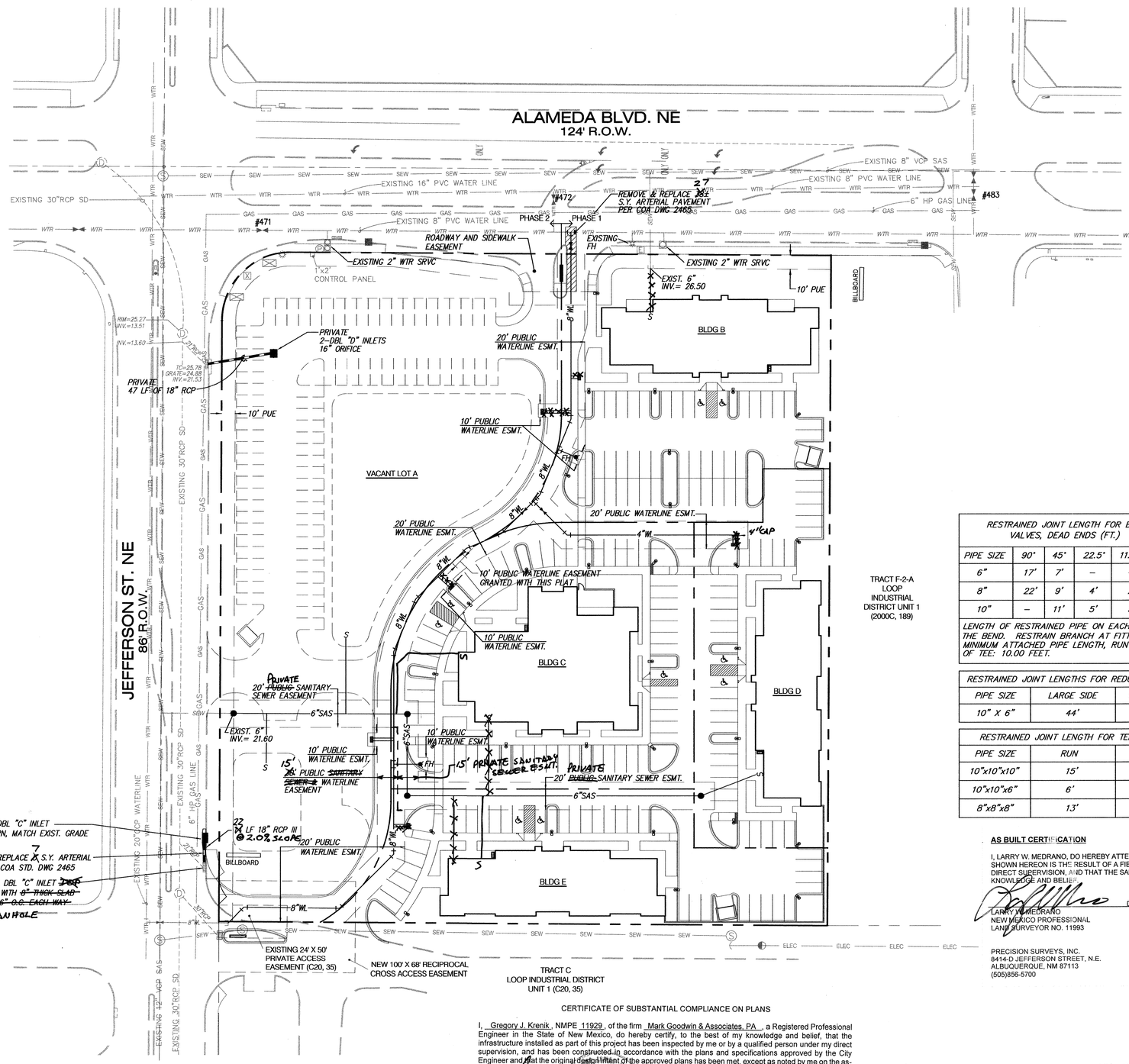

GENERAL NOTES

NOTICE TO CONTRACTORS

1. AN EXCAVATION/CONSTRUCTION PERMIT WILL BE REQUIRED BEFORE BEGINNING ANY WORK WITHIN THE CITY RIGHT-OF-WAY.
2. ALL WORK DETAILED ON THESE PLANS TO BE PERFORMED UNDER CONTRACT SHALL, EXCEPT AS OTHERWISE STATED OR PROVIDED FOR HEREON, BE CONSTRUCTED IN ACCORDANCE WITH THE CITY OF ALBUQUERQUE STANDARD SPECIFICATIONS FOR PUBLIC WORKS CONSTRUCTION, 1986 EDITION AS REVISED THROUGH UPDATE #6.
3. TWO WORKING DAYS PRIOR TO ANY EXCAVATION, THE CONTRACTOR MUST CONTACT NEW MEXICO ONE CALL SYSTEM (260-1990) FOR LOCATION OF EXISTING UTILITIES.
4. PRIOR TO CONSTRUCTION, THE CONTRACTOR SHALL EXCAVATE AND VERIFY THE HORIZONTAL AND VERTICAL LOCATIONS OF ALL OBSTRUCTIONS. SHOULD A CONFLICT EXIST, THE CONTRACTOR SHALL NOTIFY THE ENGINEER IMMEDIATELY SO THAT THE CONFLICT CAN BE RESOLVED WITH A MINIMUM AMOUNT OF DELAY.
5. CONTRACTOR SHALL COORDINATE WITH THE CITY OF ALBUQUERQUE WATER SYSTEMS DIVISION (857-8200) SEVEN (7) WORKING DAYS IN ADVANCE OF ANY WORK THAT MAY AFFECT EXISTING PUBLIC WATER OR SEWER UTILITIES. EXISTING VALVES TO BE OPERATED BY CITY PERSONNEL ONLY. CONTRACTOR SHALL CONTACT THE WATER SYSTEMS DIVISION SEVEN (7) WORKING DAYS PRIOR TO NEEDING VALVES TURNED ON OR OFF.
6. ALL EXCAVATION, TRENCHING AND SHORING ACTIVITIES MUST BE CARRIED-OUT IN ACCORDANCE WITH OSHA 29 CFR 1926.650 SUBPART P.

VALVE SHUT-OFF PLAN

1. CONTRACTOR WILL CONTACT WATER SYSTEMS AT 857-8200, SEVEN (7) DAYS PRIOR TO NECESSARY SHUT-OFF.
2. VALVES SHALL ONLY BE OPERATED BY CITY WATER EMPLOYEES SEE THIS SHEET FOR VALVE NUMBERS & LOCATIONS.
3. VALVE #'S 471, 472, 483 & 484 WILL NEED TO BE SHUT FOR THE TEE INSTALLATION.

RESTRAINED JOINT LENGTH FOR BENDS, VALVES, DEAD ENDS (FT.)

PIPE SIZE	90°	45°	22.5°	11.25°	VALVE
6"	17'	7'	–	–	46'
8"	22'	9'	4'	2'	60'
10"	–	11'	5'	3'	72'

LENGTH OF RESTRAINED PIPE ON EACH SIDE OF THE BEND. RESTRAIN BRANCH AT FITTING ONLY MINIMUM ATTACHED PIPE LENGTH, RUN SIDE OF TEE: 10.00 FEET.

RESTRAINED JOINT LENGTHS FOR REDUCERS (FT.)

PIPE SIZE	LARGE SIDE	SMALL SIDE
10" X 6"	44'	–

RESTRAINED JOINT LENGTH FOR TEES (FT.)

PIPE SIZE	RUN	BRANCH
10"x10"x10"	15'	5'
10"x10"x6"	6'	1'
8"x8"x8"	13'	3'

LEGEND

- WTR — EXISTING WATERLINE
- EXISTING FIRE HYDRANT
- SEW — EXISTING SANITARY SEWER LINE
- EXISTING SANITARY SEWER MANHOLE
- GAS — EXISTING GAS LINE
- EXISTING STORM SEWER LINE
- EXISTING STORM SEWER MANHOLE
- EXISTING STORM SEWER INLET
- EXISTING 2" WATER SERVICE
- 8"WL — PROPOSED WATERLINE
- FH — PROPOSED FIRE HYDRANT
- PROPOSED GATE VALVE
- PROPOSED 1" DOMESTIC & 1" IRRIGATION SERVICE
- 6"SAS — PROPOSED 6" SANITARY SEWER LINE
- PROPOSED 4' SANITARY SEWER MANHOLE
- PROPOSED 4" SANITARY SEWER SERVICE LINE
- PROPOSED STORM DRAIN LINE
- PROPOSED STORM DRAIN INLET

AS BUILT CERTIFICATION

I, LARRY W. MEDRANO, DO HEREBY ATTEST TO THE FACT THAT THE AS-BUILT INFORMATION SHOWN HEREON IS THE RESULT OF A FIELD SURVEY PERFORMED BY ME OR UNDER MY DIRECT SUPERVISION, AND THAT THE SAME ARE TRUE AND CORRECT TO THE BEST OF MY KNOWLEDGE AND BELIEF.

DATE: 6/18/04

LARRY W. MEDRANO
NEW MEXICO PROFESSIONAL
LAND SURVEYOR NO. 11993

PRECISION SURVEYS, INC.
8414-D JEFFERSON STREET, N.E.
ALBUQUERQUE, NM 87113
(505)856-5700

CERTIFICATE OF SUBSTANTIAL COMPLIANCE ON PLANS

I, Gregory J. Krenik, NMPE 11929, of the firm Mark Goodwin & Associates, PA, a Registered Professional Engineer in the State of New Mexico, do hereby certify, to the best of my knowledge and belief, that the infrastructure installed as part of this project has been inspected by me or by a qualified person under my direct supervision, and has been constructed in accordance with the plans and specifications approved by the City Engineer and that the original design intent of the approved plans has been met, except as noted by me on the as-built construction drawings. This certification is based on site inspections by me or personnel under my direction, and survey information provided by Larry Medrano with Precision Surveys, Inc., NMPS number 11993.

6-21-04

Gregory J. Krenik NMPE 11929

SCALE: 1" = 40'

A30470TO/PLANS/A3047-MUTI-REV/12-19-03/ACH

AS BUILT INFORMATION
CONTRACTOR Duncan Construction
WORK STAKED BY Precision Surveys, Inc. DATE 10-01
INSPECTOR'S ACCEPTANCE BY MGA DATE 5-04
FIELD VERIFICATION BY Precision Surveys, Inc. DATE 05-04
DRAWINGS CORRECTED BY Precision Surveys, Inc. DATE 05-04
MICRO-FILM INFORMATION
RECORDED BY DATE
see COA Inspector: Ron Rutledge

BENCH MARKS
ACS MONUMENT "NDC 7"
Y= 1522635.84
X= 394094.80
G-G= 0.99967075
Δα=-00°12'15"
CENTRAL ZONE (NAD 1927)

SURVEY INFORMATION
FIELD NOTES
NO. BY DATE

ENGINEER'S SEAL
DESIGNED BY GJK DATE 07/03
DRAWN BY ACH DATE 07/03
CHECKED BY DMG DATE 07/03

NO.	DATE	REMARKS	BY
1	12-19-03	NEW SHEET	GJK

REVISIONS

dmg MARK GOODWIN & ASSOCIATES, P.A.
CONSULTING ENGINEERS
P.O. BOX 90606
ALBUQUERQUE, NEW MEXICO 87199
(505) 828-2200, FAX (505) 797-9539

CITY OF ALBUQUERQUE
PUBLIC WORKS DEPARTMENT

TITLE:
OTONO PLAZA MASTER UTILITY PLAN

DESIGN REVIEW COMMITTEE: APPROVED JAN 16 2004 DESIGN REVIEW COMMITTEE
CITY ENGINEER APPROVAL: APPROVED JAN 16 2004 CITY ENGINEER
LAST DESIGN UPDATE | MO./DAY/YR. | MO./DAY/YR.

CITY PROJECT NO. 715481 | ZONE MAP NO. C-17 | SHEET 5A OF 9

SCANNED BY VESA REPRO

F:\A03\DBS\a3047cto\PLANS\A3047-MUTI-REV.dwg Fri Dec 19 10:59:06 2003 D. MARK GOODWIN & ASSOCIATES: PLTTED BY: ACH

NOTES

1. ALL STATIONING IS WATERLINE STATIONING.

~~IRRIGATION~~/DOMESTIC SERVICES

1	11+63.43, 9.63' RT.
2	12+26.23, 15.00' LT.
3	13+57.11, 11.48' RT.
4	15+17.74, 20.00' LT.
5	15+43.16, 5.00' RT.

CERTIFICATE OF SUBSTANTIAL COMPLIANCE ON PLANS

I, Gregory J. Krenik, NMPE 11929, of the firm Mark Goodwin & Associates, PA, a Registered Professional Engineer in the State of New Mexico, do hereby certify, to the best of my knowledge and belief, that the infrastructure installed as part of this project has been inspected by me or by a qualified person under my direct supervision, and has been constructed in accordance with the plans and specifications approved by the City Engineer and that the original design intent of the approved plans has been met, except as noted by me on the as-built construction drawings. This certification is based on site inspections by me or personnel under my direction, and survey information provided by Larry Medrano with Precision Surveys, Inc., NMPS number 11993.

Gregory J. Krenik NMPE 11929 6-21-04

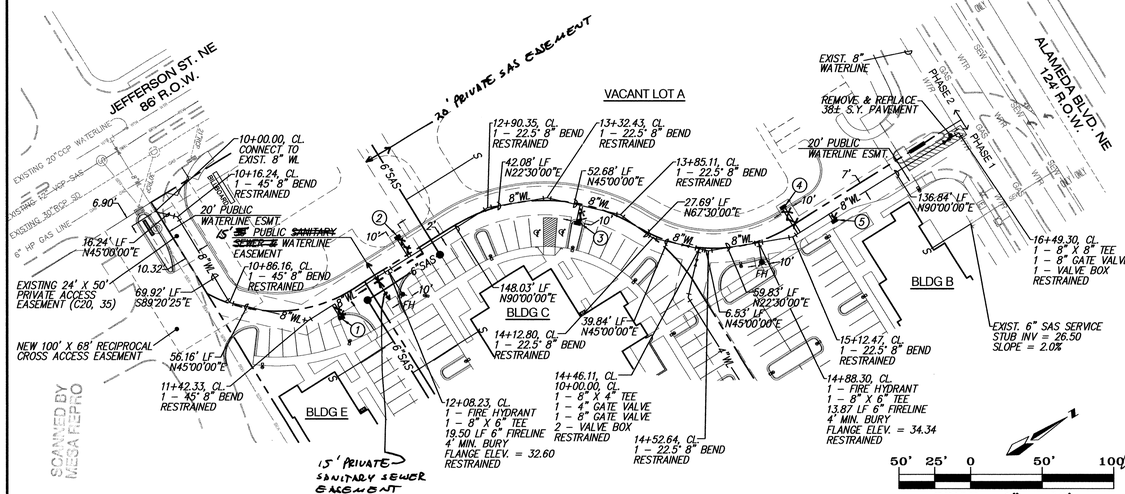

8" WATERLINE
STA. 10+00.00 TO STA. 16+49.30
SCALE: HORZ. 1" = 50'
VERT. 1" = 10'

LARRY W. MEDRANO
NEW MEXICO PROFESSIONAL
LAND SURVEYOR NO. 11993

PRECISION SURVEYS, INC.
8414-D JEFFERSON STREET, N.E.
ALBUQUERQUE, NM 87113
(505)856-5700

NOTES

1. ALL STATIONING IS SANITARY SEWER STATIONING.

SANITARY SEWER SERVICES

LOT	STATION AT PUE	INV. ELEV. AT PUE	LENGTH AT PUE
S1	10+24.27	26.07'	36.22'
S2	10+82.16	27.00'	55.22'
S3	12+20.72	26.91'	45.74'
S4	12+46.34	27.02'	54.00'
S5	14+01.84	28.00'	42.87'

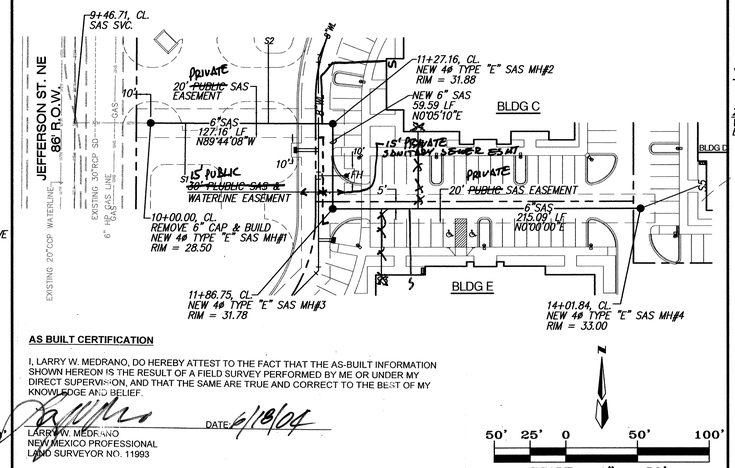

AS BUILT CERTIFICATION

I, LARRY W. MEDRANO, DO HEREBY ATTEST TO THE FACT THAT THE AS-BUILT INFORMATION SHOWN HEREON IS THE RESULT OF A FIELD SURVEY PERFORMED BY ME OR UNDER MY DIRECT SUPERVISION, AND THAT THE SAME ARE TRUE AND CORRECT TO THE BEST OF MY KNOWLEDGE AND BELIEF.

DATE 6/18/04

6" SAS LINE
STA. 10+00.00 TO STA. 14+01.84
SCALE: HORZ. 1" = 50'
VERT. 1" = 10'

NOTES

1. ALL STATIONING IS WATERLINE STATIONING.

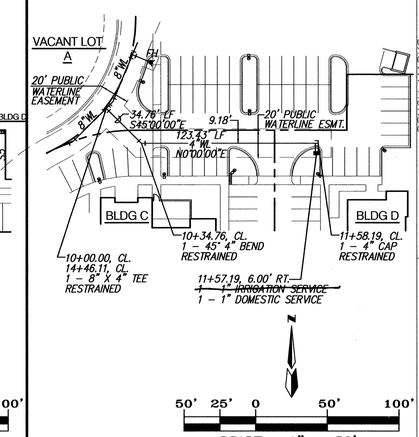

4" WATERLINE
STA. 10+00.00 TO STA. 11+58.19
SCALE: HORZ. 1" = 50'
VERT. 1" = 10'

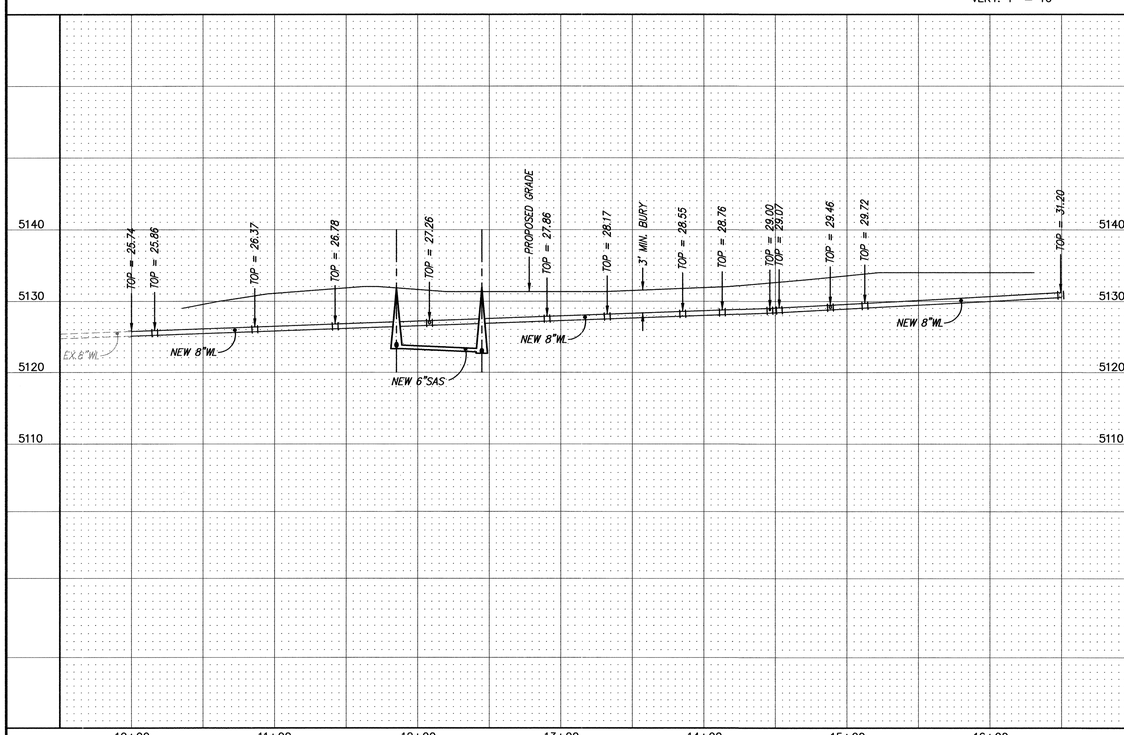

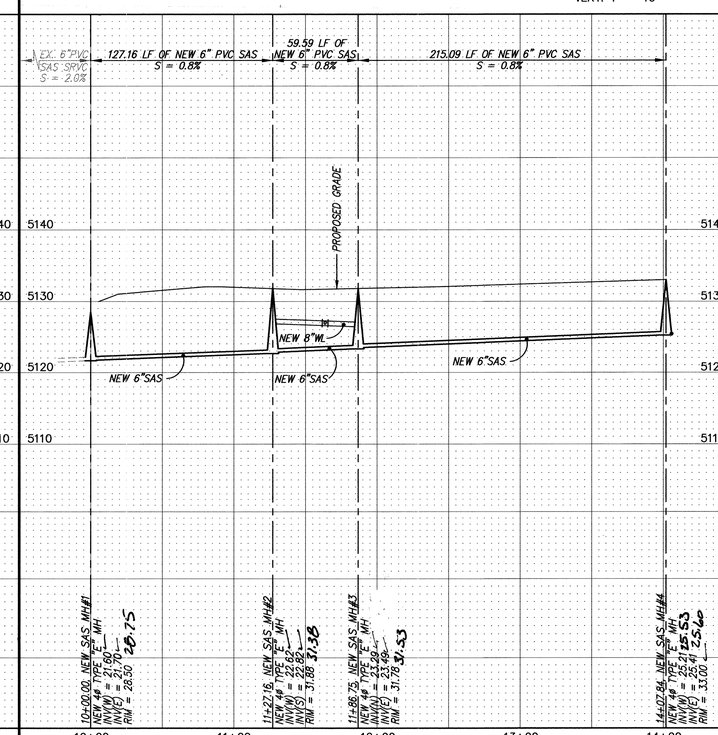

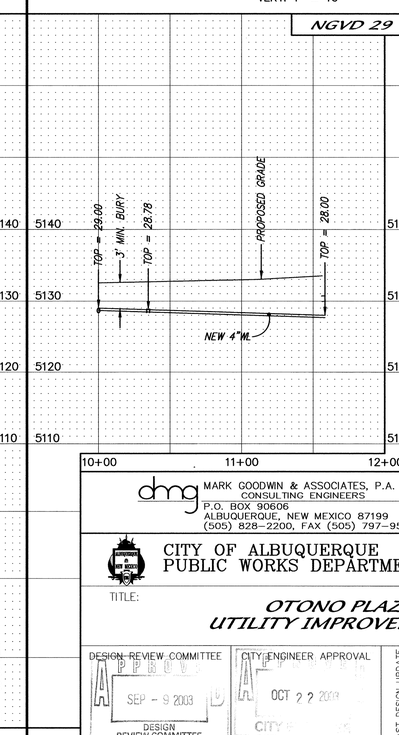

AS BUILT INFORMATION

CONTRACTOR Duncan Construction
WORK STAKED BY Precision Surveys, Inc. DATE 05/04
INSPECTOR'S ACCEPTANCE BY MGA DATE 5-24
FIELD VERIFICATION BY Precision Surveys, Inc. DATE 05/04
DRAWINGS CORRECTED BY Precision Surveys, Inc. DATE 05/04
MICRO-FILM INFORMATION
RECORDED BY DATE
NO.

BENCH MARKS

ACS MONUMENT "NDC 7"
Y= 1522635.84
X= 394094.80
G-G= 0.99967075
Δα= -00°12'15"
CENTRAL ZONE
(NAD 1927)

SURVEY INFORMATION

FIELD NOTES

NO.	BY	DATE

ENGINEER'S SEAL

NO.	DATE	REMARKS	BY
		REVISIONS	
		DESIGN	

		DATE
DESIGNED BY	GJK	07/03
DRAWN BY	ACH	07/03
CHECKED BY	DMG	07/03

dmg MARK GOODWIN & ASSOCIATES, P.A.
CONSULTING ENGINEERS
P.O. BOX 90606
ALBUQUERQUE, NEW MEXICO 87199
(505) 828-2200, FAX (505) 797-9539

CITY OF ALBUQUERQUE
PUBLIC WORKS DEPARTMENT

TITLE:

OTONO PLAZA UTILITY IMPROVEMENTS

DESIGN REVIEW COMMITTEE	CITY ENGINEER APPROVAL	LAST DESIGN UPDATE	MO./DAY/YR.	MO./DAY/YR.
APPROVED SEP - 9 2003 DESIGN REVIEW COMMITTEE	APPROVED OCT 22 2003 CITY ENGINEER			

CITY PROJECT NO.	ZONE MAP NO.	SHEET	OF
715481	C-17	6	9

A3047OTO/PLANS/A3047UP-1/08-14-03/ACH

SCANNED BY MEGA FEPO
F:\A03JOBS\a3047oto\PLANS\A3047UP-1.dwg Thu Aug 14 14:49:16 2003 D: MARK GOODWIN & ASSOCIATES, PLTTED BY: ACH

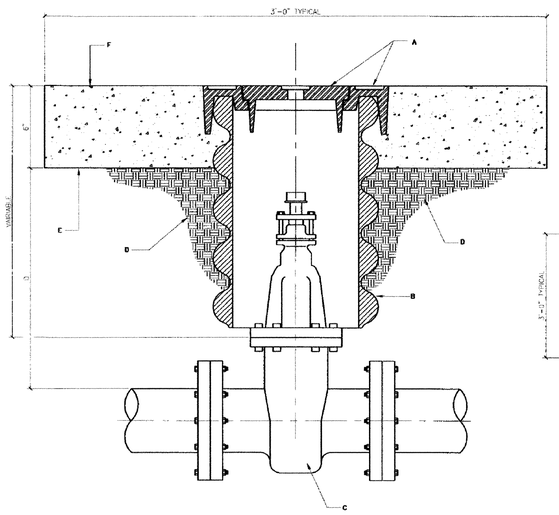

GENERAL NOTES:

A VALVE BOX RING AND COVER. SEE DWG. 2328.

B 10" DIAMETER RIBBED OR CORRUGATED PVC OR PE PIPE WITH SMOOTH INTERIOR.

C NEW OR EXISTING VALVE.

D COMPACTED BACKFILL. SOIL OR BASE COURSE MATERIAL (95% COMPACTION). SEE SECTION 701.

E 3'-0"x3'-0" OCTAGONAL CONCRETE COLLAR. COLLAR IS TO BE TAPERED IN UNPAVED ROADWAYS AND FLUSH IN PAVED ROADWAY. CONCRETE STRENGTH SHALL BE PER SECTION 101 OF THE STANDARD SPECIFICATIONS, LATEST EDITION.

F TOP OF CONCRETE COLLAR SHALL BE STAMPED WITH LINE SIZE AND DIRECTION. MINIMUM LETTER SIZE SHALL BE 3" IN HEIGHT.

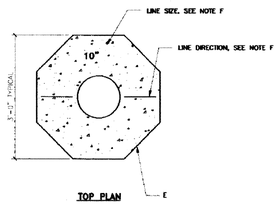

TOP PLAN

REVISIONS	CITY OF ALBUQUERQUE WATER VALVE BOX
	DWG. 2326 JANUARY 2002

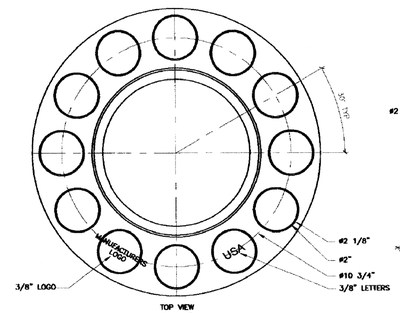

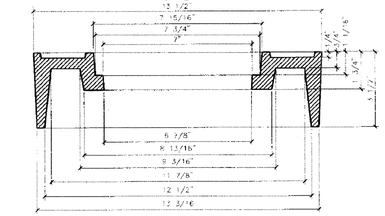

VALVE BOX RING

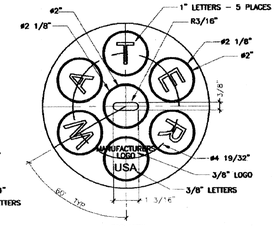

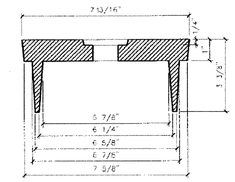

VALVE BOX COVER

GENERAL NOTES - RING

1 ALBUQUERQUE VALVE BOX RING DESIGNED TO ACCEPT AN ALBUQUERQUE VALVE BOX COVER.

2 THE CASTING NUMBER, MANUFACTURER'S LOGO, DATE OF MANUFACTURE AND "USA" SHALL BE CAST IN A CONSPICUOUS LOCATION ON BOTH THE RING AND THE COVER.

3 FILLETS SHALL BE 1/4"R UNLESS OTHERWISE SPECIFIED.

4 A DRAFT ANGLE OF 3°-5° SHALL BE APPLIED UNLESS OTHERWISE SPECIFIED.

5 FINISH: REMOVE EXCESS IRON AND FINS.

6 THIS DETAIL DOES NOT APPLY FOR VALVE BOX RING AND COVER TO BE USED ON REUSE OR NON-POTABLE WATER SYSTEMS.

GENERAL NOTES - COVER

1 ALBUQUERQUE VALVE BOX COVER DESIGNED TO FIT INTO AN ALBUQUERQUE VALVE BOX RING.

2 THE CASTING NUMBER, MANUFACTURER'S LOGO, DATE OF MANUFACTURE AND "USA" SHALL BE CAST IN A CONSPICUOUS LOCATION ON BOTH THE RING AND THE COVER.

3 FILLETS SHALL BE 1/4"R UNLESS OTHERWISE SPECIFIED.

4 A DRAFT ANGLE OF 3°-5° SHALL BE APPLIED UNLESS OTHERWISE SPECIFIED.

5 FINISH: REMOVE EXCESS IRON AND FINS.

REVISIONS	CITY OF ALBUQUERQUE WATER RING AND COVER FOR VALVE BOX
	DWG. 2328 JANUARY 2002

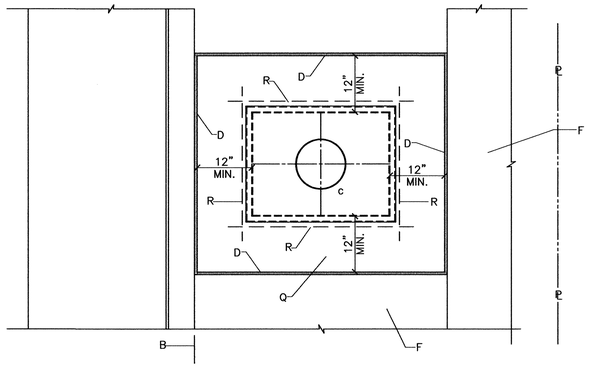

PLAN

SEE DWG. 2361 FOR TYPICAL INSTALLATIONS

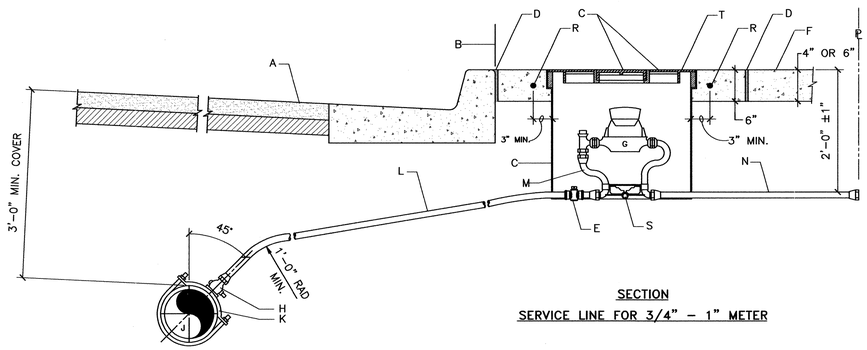

SECTION

SERVICE LINE FOR 3/4" - 1" METER

GENERAL NOTES:

1 THE METER SHALL BE SET UTILIZING A COPPER-SETTER. COPPER-SETTER HEIGHT 10" FOR 1" METER. 7" FOR 3/4" METER.

2 THE VALVE AND METER REGISTER BOX SHALL BE LOCATED UNDER THE LID OPENING. WHERE TWO METERS ARE TO BE INSTALLED IN A SINGLE METER BOX, THE METER REGISTERS SHALL BE WITHIN READING RANGE OF THE LID OPENING.

3 METER BOX LOCATION TO CONFORM TO DWG. 2361.

4 WHEN CONTRACTOR DOES NOT INSTALL METER, CONTRACTOR SHALL PROVIDE REMOVABLE PLUGS FOR END OF COPPER-SETTER.

5 EXISTING CONCRETE TO BE SAWCUT.

CONSTRUCTION NOTES:

A STREET SURFACE.

B BACK OF CURB.

C CAST IRON METER BOX, COVER AND LID. SEE DWG. 2368 OR 2369.

D 1/2" EXPANSION JOINT.

E CURB STOP, LOCATE INSIDE METER BOX.

F SIDEWALK OR DRIVEPAD.

G METER. TOP OF METER TO BE 12"-18" BELOW COVER.

H CORP STOP.

J MAIN WATER LINE.

K TAPPING SADDLE.

L COPPER SERVICE LINE.

M COPPER SETTER.

N TAILPIECE TO PROPERTY LINE WITH INSTA-TITE I.P.T. CAPPED FITTING.

Q CONCRETE PAD REQUIRED IN ALL AREAS.

R #4 REBAR CONTINUOUS ALL AROUND METER BOX.

S STABILIZER BAR. 12" LONG X 1/2" DIAMETER GALVANIZED STEEL PIPE.

T METER BOX LID SHALL BE FLUSH WITH SURROUNDING SIDEWALK.

A30470TO/PLANS/A3047-WAT-DET/08-14-03/ACH

AS BUILT INFORMATION

CONTRACTOR Duncan Construction
WORK STAKED BY Precision Surveys, Inc. DATE 05/04
INSPECTOR'S ACCEPTANCE BY DATE
FIELD VERIFICATION BY Precision Surveys, Inc. DATE 05/04
DRAWINGS CORRECTED BY Precision Surveys, Inc. DATE 05/04
MICRO-FILM INFORMATION
RECORDED BY DATE
NO.

BENCH MARKS

SURVEY INFORMATION

FIELD NOTES

NO.	BY	DATE

ENGINEER'S SEAL

DRAFT
C.O.A. STANDARD

NO.	DATE	REMARKS	BY

REVISIONS

		DATE
DESIGNED BY	GJK	07/03
DRAWN BY	ACH	07/03
CHECKED BY	DMG	07/03

dmg MARK GOODWIN & ASSOCIATES, P.A.
CONSULTING ENGINEERS
P.O. BOX 90606
ALBUQUERQUE, NEW MEXICO 87199
(505) 828-2200, FAX (505) 797-9539

CITY OF ALBUQUERQUE
PUBLIC WORKS DEPARTMENT

TITLE:

OTONO PLAZA
WATER DETAILS

DESIGN REVIEW COMMITTEE	CITY ENGINEER APPROVAL	LAST DESIGN UPDATE	MO./DAY/YR.	MO./DAY/YR.
C.O.A. STANDARD	C.O.A. STANDARD			

DRAFT

CITY PROJECT NO.	ZONE MAP NO.	SHEET	OF
715481	C-17	7	9

SCANNED BY MESA REPRO
F:\A03JOBS\a3047oto\PLANS\A3047-WAT-DET.dwg Thu Aug 14 14:50:11 2003 D. MARK GOODWIN & ASSOCIATES, PLTTED BY: ACH

CONSTRUCTION TRAFFIC CONTROL GENERAL NOTES

1. CONTRACTOR MUST OBTAIN FROM CONSTRUCTION COORDINATION AN EXCAVATION/BARRICADING PERMIT BEFORE ENGAGING IN ANY CONSTRUCTION, MAINTENANCE OR REPAIR WORK IN ANY OF THE CITY OF ALBUQUERQUE'S RIGHTS-OF-WAY. EMERGENCY WORK THAT WOULD PRESERVE LIFE OR PROPERTY IS EXCLUDED WITH THE UNDERSTANDING, THAT A PERMIT SHALL BE OBTAINED WITHIN 24 TO 48 HOURS.

2. CONTRACTOR SHALL AT THE TIME OF PERMIT REQUEST, SUBMIT FOR APPROVAL BY CONSTRUCTION COORDINATION, A TRAFFIC CONTROL PLAN DETAILING ALL EXISTING TOPOGRAPHY SUCH AS LANE WIDTHS, DRIVEWAYS, AND BUSINESS/RESIDENTIAL ACCESSES. THE TRAFFIC CONTROL PLAN SHALL INCLUDE ALL PHASES OF WORK AND SCHEDULES INVOLVED IN THE CONSTRUCTION PROJECT. ANY SEPERATE PHASES OF A CONSTRUCTION PROJECT SHALL BE GIVEN AN INDIVIDUAL PERMIT EACH. BLANKET PERMITS WILL NOT BE ISSUED.

3. THESE TYPICAL TRAFFIC CONTROL PLANS DO NOT REFLECT THE EXISTING TOPOGRAPHY SUCH AS DRIVEWAYS, LANE WIDTHS, AND BUSINESS/RESIDENTIAL ACCESSES. EVERY LOCATION THAT REQUIRES CONSTRUCTION TRAFFIC CONTROL SHALL HAVE A DETAILED TRAFFIC CONTROL PLAN SHOWING ALL EXISTING TOPOGRAPHY.

4. CONSTRUCTION SHALL NOT BEGIN UNLESS A TRAFFIC CONTROL PLAN HAS BEEN APPROVED AND VERIFIED BY CONSTRUCTION COORDINATION.

5. CONSTRUCTION COORDINATION SHALL BE NOTIFIED 48 HOURS PRIOR TO ANY TRAFFIC CONTROL CHANGES NEEDED BY CONTRACTOR, THAT WERE NOT PREVIOUSLY APPROVED. THESE TRAFFIC CONTROL CHANGES SHALL BE REQUESTED IN WRITING ACCOMPANIED WITH A TRAFFIC CONTROL PLAN REFLECTING SUCH CHANGES.

6. ALL CONSTRUCTION TRAFFIC CONTROL DEVICES SHALL COMPLY TO THE MANUAL ON UNIFORM TRAFFIC CONTROL DEVICES (MUTCD), LATEST EDITION. IT IS THE RESPONSIBILITY OF THE CONTRACTOR TO INSTALL, SERVICE AND MAINTAIN ALL TRAFFIC CONTROL DEVICES. TRAFFIC CONTROL DEVICES SHALL NOT BE REMOVED OR ALTERED IN ANY WAY WITHOUT THE APPROVAL OF CONSTRUCTION COORDINATION, PER SECTION 6A-4 OF THE MUTCD, LATEST EDITION.

7. THE CONSTRUCTION TRAFFIC CONTROL INITIAL SET-UP SHALL BE BY AN AMERICAN TRAFFIC SAFETY SERVICES ASSOCIATION (ATSSA) CERTIFIED WORKSITE TRAFFIC SUPERVISOR. THE MAINTENANCE AND SERVICING SHALL ALSO BE DONE BY AN ATSSA CERTIFIED WORKSITE TRAFFIC SUPERVISOR OR EQUIVALENT.

8. CONTRACTOR IS RESPONSIBLE TO MAINTAIN AND SERVICE ALL TRAFFIC CONTROL DEVICES 24 HOURS A DAY, 7 DAYS A WEEK THROUGHOUT LENGTH OF PROJECT. CONTRACTOR IS RESPONSIBLE THAT ALL TRAFFIC CONTROL DEVICES COMPLY WITH THE MUTCD, LATEST EDITION.

9. ALL ADVANCE WARNING SIGNS SHALL BE DOUBLE INDICATED WHENEVER THERE ARE MULTI-LANE TRAFFIC IN ANY ONE GIVEN DIRECTION AND THERE IS SUFFICIENT MEDIAN SPACE.

10. ALL BARRICADES IN ALL TAPERS AND TANGENTS SHALL BE PLACED APART, A DISTANCE MEASURED IN FEET, EQUAL TO THAT OF THE POSTED SPEED LIMIT. NO EXCEPTIONS UNLESS APPROVED BY CONSTRUCTION COORDINATION PER MUTCD SECTION 6A-4.

△1 11. ALL WORK IN ARTERIAL ROADWAYS SHALL BE ON A CONTINUOUS 24 HOUR PER DAY BASIS UNTIL COMPLETED.

12. CONTRACTOR IS RESPONSIBLE TO PROVIDE CONSTRUCTION COORDINATION, A WEEKLY LOG OF DAILY INSPECTIONS OF BARRICADE AND MAINTENANCE SCHEDULES ON PROJECTS THAT ARE OVER ONE WEEK DURATION.

13. EQUIPMENT OR MATERIALS SHALL NOT BE STORED WITHIN 15 FEET OF A TRAVELED TRAFFIC LANE DURING NON-WORKING HOURS WITHOUT THE APPROVAL OF CONSTRUCTION COORDINATION.

14. CONTRACTOR SHALL PROVIDE AND MAINTAIN A SAFE AND ADEQUATE MEANS OF CHANNELIZING PEDESTRIAN TRAFFIC AROUND AND THROUGH THE CONSTRUCTION AREA.

15. CONTRACTOR IS RESPONSIBLE FOR OBLITERATION OF ANY CONFLICTING STRIPING AND RESPONSIBLE FOR ALL TEMPORARY STRIPING.

16. CONTRACTOR SHALL MAINTAIN ACCESS TO ALL FACILITIES, BUSINESSES AND/OR RESIDENTS AT ALL TIMES.

17. CONTRACTOR SHALL PROVIDE ACCESS SIGNS FOR BUSINESSES LOCATED WITHIN THE CONSTRUCTION AREA UNDER THE SUPERVISION OF CONSTRUCTION COORDINATION. EACH ACCESS SIGN SHALL HAVE 5 INCH, WHITE OPAQUE LETTERING ON BLUE REFLECTORIZED BACKGROUND. ACCESS SIGNS SHALL BE CONSIDERED INCIDENTAL TO THE BID AND NOT PART OF THE CONTRACT UNLESS OTHERWISE STATED. NO MORE THAN 3 BUSINESSES SHALL BE LISTED ON A ACCESS SIGN. SHOPPING CENTERS AND MALLS SHALL BE LISTED AS SUCH.

18. ALL ADVANCE WARNING SIGNS SHALL MEET THE MINIMUM REFLECTIVE INTENSITY REQUIREMENTS SET FORTH BY THE CITY OF ALBUQUERQUE. CONSTRUCTION COORDINATION SHALL DETERMINE ALL REQUIREMENTS AND APPROVE OR DISAPPROVE ANY ADVANCE WARNING SIGN PER SECTION 6A-4 OF THE MUTCD, LATEST EDITION.

△2 19. 48 HOURS PRIOR TO OCCUPYING OR CLOSING OF A RIGHT-OF-WAY, CONTRACTOR SHALL NOTIFY: POLICE, FIRE DEPARTMENT, SCHOOLS, HOSPITALS, TRANSIT AUTHORITY, BUSINESSES AND/OR RESIDENTS THAT WILL BE AFFECTED BY THE CONSTRUCTION.

20. ANY FIELD ADJUSTMENTS SHALL BE APPROVED BY CONSTRUCTION COORDINATION.

21. EXCAVATIONS SHALL BE PLATED, TEMPORARILY PATCHED OR RESURFACED PRIOR TO OPENING OF TRAFFIC. A MINIMUM OF 11 FEET SHALL BE PROVIDED FOR TRAFFIC IN ANY GIVEN DIRECTION. CONTRACTOR IS RESPONSIBLE FOR ANY WORK INVOLVED IN SATISFYING THESE REQUIREMENTS.

22. CONTRACTOR SHALL AT ALL TIMES COMPLY WITH THE FOLLOWING:
1. STANDARDS AND REQUIREMENTS SET FORTH IN THE MANUAL ON UNIFORM TRAFFIC CONTROL DEVICES, LATEST EDITION.
2. THE CITY OF ALBUQUERQUE TRAFFIC CODE, LATEST EDITION.
3. SECTION 19 OF THE CITY OF ALBUQUERQUE'S STANDARD SPECIFICATIONS FOR PUBLIC WORK CONSTRUCTION, AS WELL AS OTHER SECTIONS.

23. FAILURE TO COMPLY WITH ANY OF THE ABOVE MENTIONED, WILL BE ADEQUATE CAUSE TO CEASE ALL WORK ON ANY CONSTRUCTION PROJECT. WORK WILL NOT RESUME UNTIL ALL REQUIREMENTS ARE ADDRESSED AND APPROVED BY CONSTRUCTION COORDINATION.

24. ALL TRAFFIC CONTROL DEVICES SHALL BE KEPT IN NEW-CLEAN CONDITION, WASHING OF EQUIPMENT IS INCIDENTAL TO IT'S PLACEMENT AND MAINTENANCE.

25. TRAFFIC CONTROL STANDARDS APPLY ONLY WHERE THE CONSTRUCTION TRAFFIC CONTROL PLANS ARE NOT SPECIFIC.

△3 26. ADVANCE WARNING SIGNS SHALL BE 36"x36" MIN. WITH SUPER ENGINEERING GRADE SHEETING OR BETTER. MOUNTING HEIGHT AT TOP OF SIGN SHALL BE THE SAME AS FOR A 48" SIGN AS INDICATED IN THE M.U.T.C.D.

△4 27. CONTRACTOR SHALL MAINTAIN A GRAFFITI-FREE WORKSITE. ALL GRAFFITI SHALL BE PROMPTLY REMOVED FROM ALL EQUIPTMENT, BOTH PERMANENT AND TEMPORARY.

SPECIAL PROJECT TRAFFIC CONTROL NOTES

28. ONLY SINGLE LANE CLOSURES IN EACH DIRECTION ARE ALLOWED ON JEFFERSON STREET OR ALAMEDA BLVD. DOUBLE LANE CLOSURES OR TRAFFIC SPLITS ARE NOT ALLOWED.

29. NO LANE CLOSURES ARE ALLOWED ON EASTBOUND ALAMEDA BLVD. FROM 6:00 A.M. TO 9:00 A.M., MONDAY THROUGH FRIDAY.

30. NO LANE CLOSURES ARE ALLOWED ON NORTHBOUND JEFFERSON STREET FROM 4:00 P.M. TO 7:00 P.M., MONDAY THROUGH FRIDAY.

31. ALL LANE CLOSURES ON EITHER JEFFERSON STREET OR ALAMEDA BLVD. ARE SUBJECT TO ARTERIAL/COLLECTOR ROAD USAGE FEES OF $0.01 PER SQUARE FOOT OF BARRICADED AREA PER DAY.

32. CONTRACTOR MUST ALSO OBTAIN PERMISSION FROM THE NMDOT, DISTRICT 3 OFFICE PRIOR TO WORKING IN ALAMEDA BLVD.

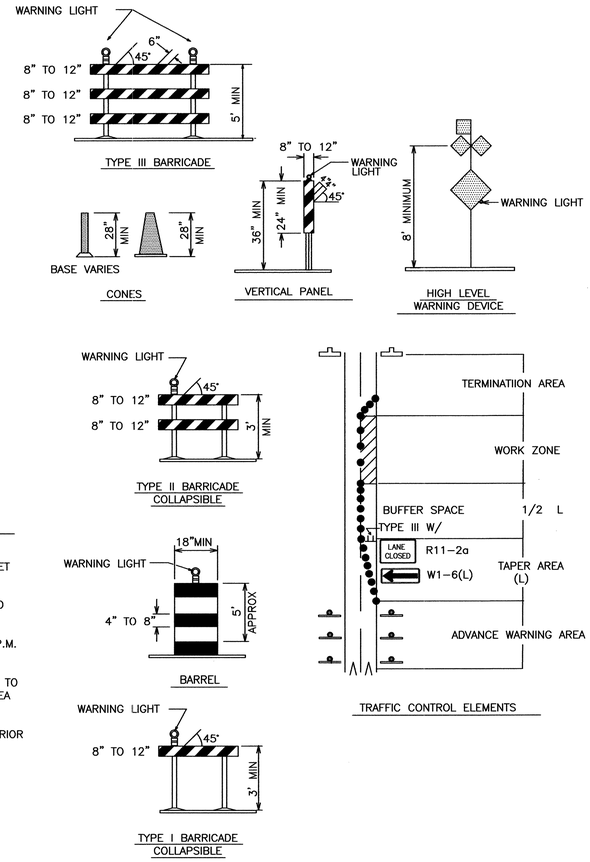

LEGEND

- WORK AREA
- BARRICADE – TYPE I, TYPE II, OR BARREL
- BARRICADE – TYPE III
- VERTICAL PANEL
- WARNING SIGN
- D — DISTANCE BETWEEN SIGNS – A DISTANCE MEASURED IN FEET EQUAL TO A VALUE OF TEN TIMES THE SPEED LIMIT OF THE STREET
- FLAGMAN POSITION
- S — SPACING BETWEEN BARRICADES – A DISTANCE MEASURED IN FEET EQUAL TO THE STREET LIMIT OF THE STREET
- L — TAPER LENGTH – SEE CHART BELOW

THE TANGENT LENGTH IS EQUAL TO THE TAPER LENGTH FOR A GIVEN STREET.

TAPER REQUIREMENT

SPEED LIMIT (MPH)	TAPER LENGTH(L) (FEET)			MINIMUM NUMBER OF DEVICES FOR TAPER	MAXIMUM DEVICE SPACING IN FEET	
	10' LANE	11' LANE	12' LANE		ALONG TAPER	AFTER TAPER
20	70	75	80	5	20	20
25	105	115	125	6	25	25
30	150	165	180	7	30	30
35	205	225	245	8	35	35
40	270	295	320	9	40	40
45	450	495	540	13	45	45
50	500	550	600	13	50	50
55	550	605	660	13	55	55

RECOMMENDED SIGN SPACING(D) FOR ADVANCE WARNING SIGN SERIES

SPEED MILES PER HOUR	MINIMUM DISTANCE IN FEET BETWEEN SIGNS	FROM LAST SIGN TO TAPER
0-20	10 X SPEED LIMIT	10 X SPEED LIMIT
25-30	10 X SPEED LIMIT	10 X SPEED LIMIT
30-35	10 X SPEED LIMIT	10 X SPEED LIMIT
40-45	10 X SPEED LIMIT	10 X SPEED LIMIT
50-60	10 X SPEED LIMIT	10 X SPEED LIMIT

TAPER CRITERIA

TYPE OF TAPER	TAPER LENGTH
UPSTREAM TAPER:	
MERGING TAPER	L MINIMUM
SHIFTING TAPER	1/2 L MINIMUM
SHOULDER TAPER	1/2 L MINIMUM
TWO-WAY TRAFFIC TAPER	100 FEET MAXIMUM
DOWNSTREAM TAPERS	100 FEET PER LANE

TAPER LENGTH COMPUTATION

SPEED LIMIT	
40 MPH OR LESS	$L = \frac{WS^2}{60}$
40 MPH OR GREATER	$L = W \times S$

L = TAPER LENGTH
W = WIDTH OF OFFSET IN FEET
S = POSTED SPEED OR OFF-PEAK 85-PERCENTILE SPEED IN MPH

SIGN FACE DETAILS

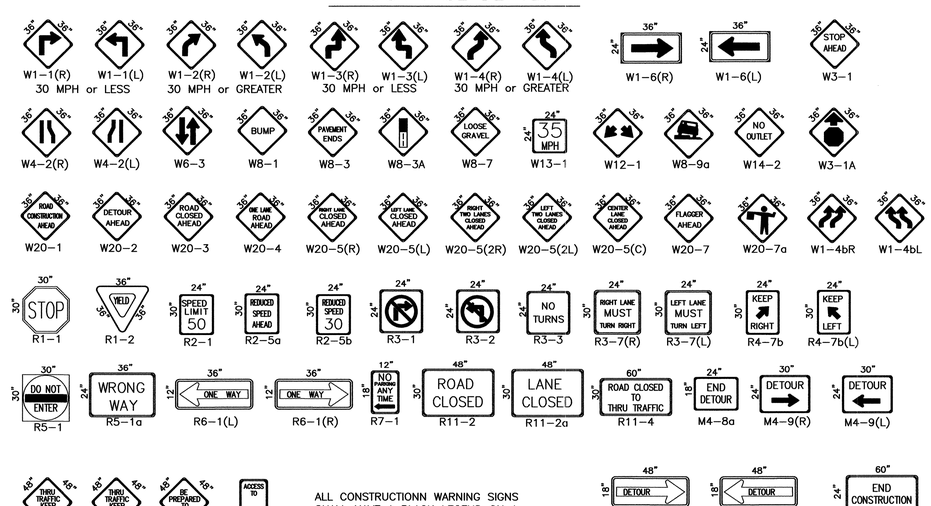

ALL CONSTRUCTIONN WARNING SIGNS SHALL HAVE A BLACK LEGEND ON A ORANGE BACKGROUND.

AS-BUILT INFORMATION
CONTRACTOR Duncan Construction DATE 05/04
WORK STAKED BY Precision Surveys, Inc. DATE 05/04
INSPECTOR'S ACCEPTANCE BY DATE
FIELD VERIFICATION BY Precision Surveys, Inc. DATE 05/04
DRAWINGS CORRECTED BY Precision Surveys, Inc. DATE 05/04
MICRO-FILM INFORMATION
RECORDED BY DATE
NO.

BENCH MARKS

SURVEY INFORMATION
FIELD NOTES

NO.	BY	DATE

ENGINEER'S SEAL

C.O.A. STANDARD

NO.	DATE	REMARKS	BY
△1	9/25/97	ADD NOTE NO. 27	J.D.L.
△2	9/24/97	REVISED NOTE NO. 26	J.D.L.
△3	9/24/97	REVISED NOTE NO. 19	J.D.L.
△4	9/24/97	REVISED NOTE NO. 11	J.D.L.

REVISIONS

DESIGN		
DESIGNED BY BOHANNAN HUSTON	DATE 5-97	
DRAWN BY BOHANNAN HUSTON	DATE 5-97	
CHECKED BY BOHANNAN HUSTON	DATE 5-97	

CITY OF ALBUQUERQUE
PUBLIC WORKS DEPARTMENT
ENGINEERING DEVELOPMENT GROUP

TITLE: *OTONO PLAZA TRAFFIC CONTROL*

DESIGN REVIEW COMMITTEE	CITY ENGINEER APPROVAL	LAST DESIGN UPDATE	MO./DAY/YR.	MO./DAY/YR.
C.O.A. STANDARD	C.O.A. STANDARD			

CITY PROJECT NO.	ZONE MAP NO.	SHEET	OF
715481	C-17	8	9

SCANNED BY MEGA PIERO

F:\A03JOBS\a3047ato\PLANS\citysign.dwg Thu Aug 14 14:50:33 2003 D. MARK GOODWIN & ASSOCIATES; PLTTED BY: ACH
[BHI-MAIN\PROJECTS\97177\TRANS\DESIGN\SIGNAL]CITYSIGN.DWG
CITYSIGN.DWG 6-11-97

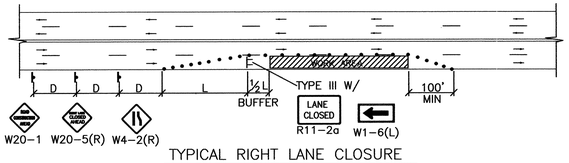

TYPICAL RIGHT LANE CLOSURE

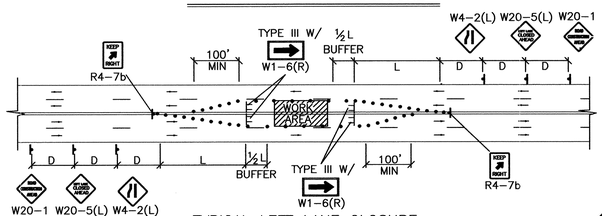

TYPICAL LEFT LANE CLOSURE

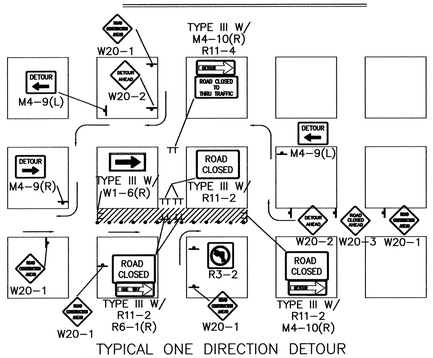

TYPICAL ONE DIRECTION DETOUR

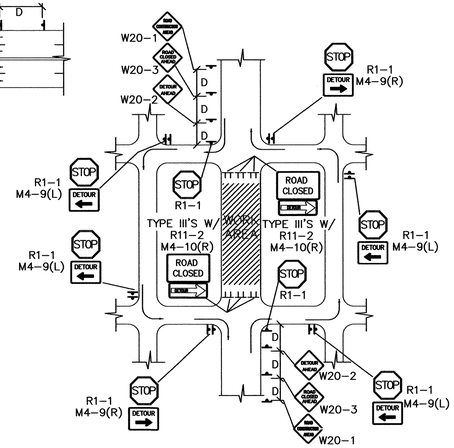

TYPICAL STREET CLOSURE

NOTE: (R1-1) BASED ON FIELD CONDITIONS.

NOTE:
MAY REQUIRE LEFT LANE CLOSURE DEPENDING ON FIELD CONDITIONS.

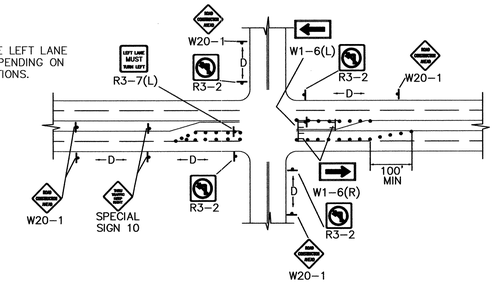

TYPICAL LANE CLOSURE AT INTERSECTION

NOTE: DEPENDING ON WORK ZONE LOCATION.

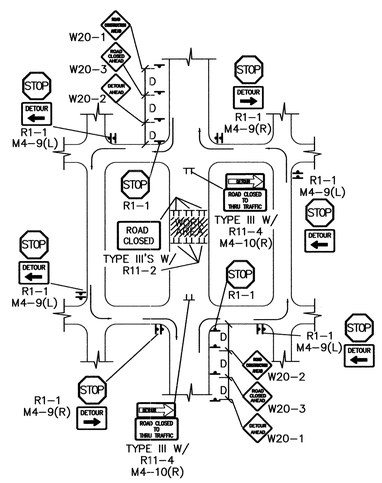

TYPICAL MID-BLOCK CLOSURE

NOTE: (R1-1) BASED ON FIELD CONDITIONS.

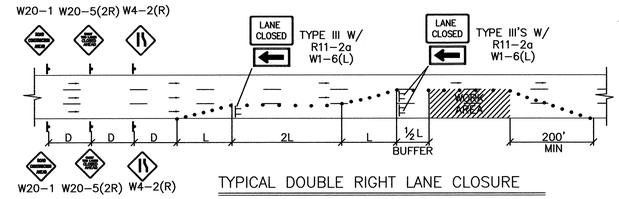

TYPICAL DOUBLE RIGHT LANE CLOSURE

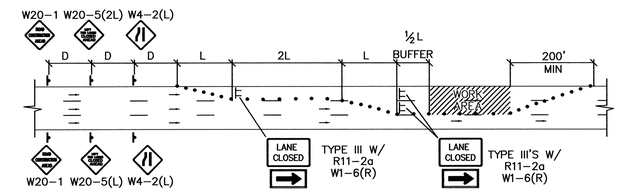

TYPICAL DOUBLE LEFT LANE CLOSURE

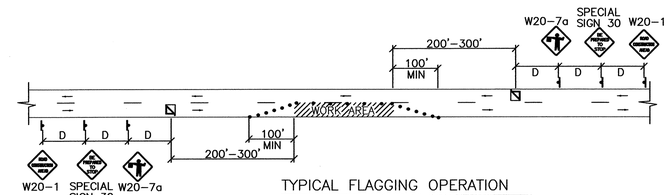

TYPICAL FLAGGING OPERATION

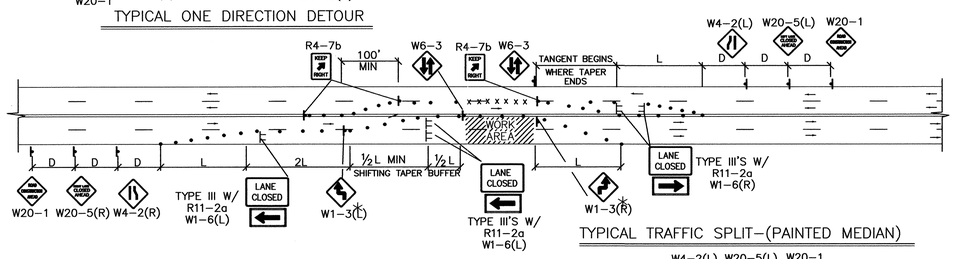

TYPICAL TRAFFIC SPLIT-(PAINTED MEDIAN)

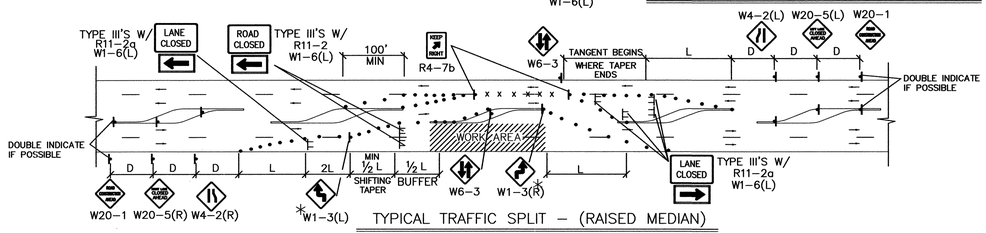

TYPICAL TRAFFIC SPLIT – (RAISED MEDIAN)

TRAFFIC SPLIT NOTES:

1. THE OFFSET DISTANCE MUST BE CALCULATED IN ALL SHIFTING TAPERS. THE OFFSET DISTANCES SHALL INCLUDE LANE WIDTHS PLUS MEDIAN WIDTHS.
2. 1/2 L IS THE MINIMUM DISTANCE FOR SHIFTING TAPERS.
3. REVERSE CURVES MAY BE IMPLEMENTED. ALL CURVE DATA SHALL BE CALCULATED.
4. MEDIAN REMOVAL SHALL BE REQUIRED IF 1/2 L OR REVERSE CURVE IS NOT SUFFICIENT. MEDIAN REMOVAL SHALL TAKE PLACE BEFORE SPLITS.
5. REDUCED SPEED MAY BE CONSIDERED.
6. * USE W1-3 FOR 30 MPH OR LESS, W1-4 FOR SPEED 35 MPH OR GREATER.

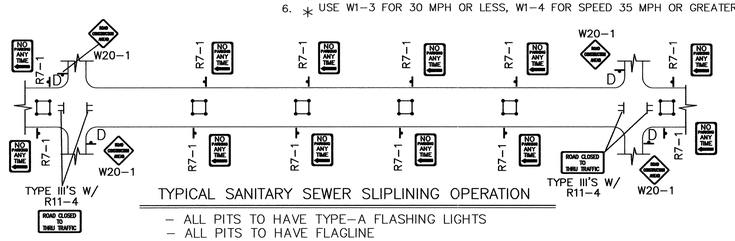

TYPICAL SANITARY SEWER SLIPLINING OPERATION

- ALL PITS TO HAVE TYPE-A FLASHING LIGHTS
- ALL PITS TO HAVE FLAGLINE

GENERAL NOTE:

ALL CONSTRUCTION WARNING SIGNS SHALL HAVE A BLACK LEGEND ON A ORANGE BACKGROUND.

⚠ ALL ADVANCE WARNING SIGNS SHALL BE A MINIMUM OF 36" THIRTY SIX INCHES BY 36" THIRTY SIX INCHES IN SIZE AND SHALL HAVE ONE WARNING LIGHT.

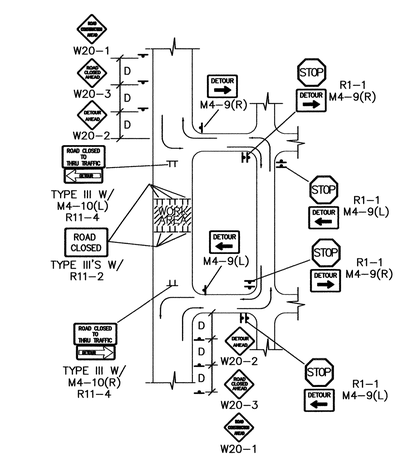

TYPICAL STREET CLOSURE

NOTE: (R1-1) BASED ON FIELD CONDITIONS.

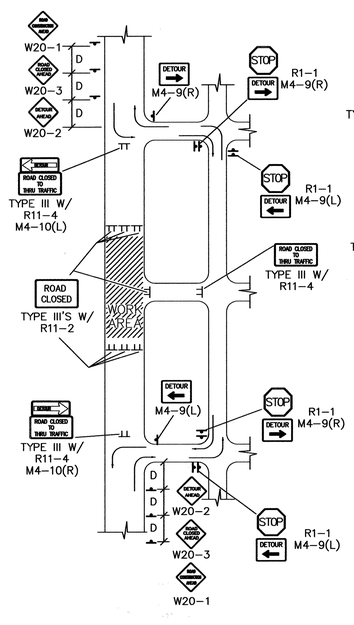

TYPICAL STREET CLOSURE

NOTE: (R1-1) BASED ON FIELD CONDITIONS.

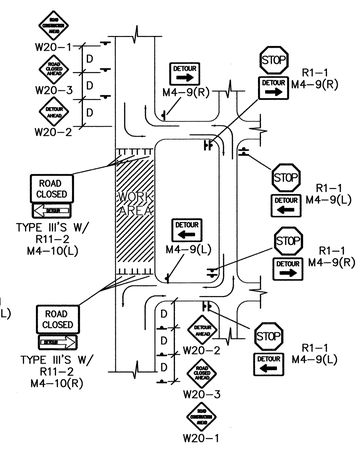

TYPICAL STREET CLOSURE

NOTE: (R1-1) BASED ON FIELD CONDITIONS.

AS-BUILT INFORMATION
CONTRACTOR Duncan Construction DATE
WORK DONE BY Precision Surveys, Inc. DATE 05/01
INSPECTOR'S ACCEPTANCE BY DATE
FIELD VERIFICATION BY Precision Surveys, Inc. DATE 05/01
COMPUTED BY Precision Surveys, Inc. DATE 05/01
MICRO-FILM INFORMATION
RECORDED BY DATE
NO.

BENCH MARKS

SURVEY INFORMATION
FIELD NOTES
NO. BY DATE

ENGINEER'S SEAL

C.O.A. STANDARD

NO.	DATE	REMARKS	BY
1	9/24/97	REVISED GENERAL NOTE	J.D.L.

REVISIONS

DESIGN
DESIGNED BY BOHANNAN HUSTON DATE 5-97
DRAWN BY BOHANNAN HUSTON DATE 5-97
CHECKED BY BOHANNAN HUSTON DATE 5-97

CITY OF ALBUQUERQUE
PUBLIC WORKS DEPARTMENT
ENGINEERING DEVELOPMENT GROUP

TITLE: *OTONO PLAZA TRAFFIC CONTROL*

DESIGN REVIEW COMMITTEE	CITY ENGINEER APPROVAL	LAST DESIGN UPDATE	MO./DAY/YR.	MO./DAY/YR.
C.O.A. STANDARD	C.O.A. STANDARD			

CITY PROJECT NO.	ZONE MAP NO.	SHEET	OF
715481	C-17	9	9

SCANNED BY MESA FILEPRO

F:\A03JOBS\a3047oto\PLANS\cityraf.dwg Thu Aug 14 14:50:59 2003 D. MARK GOODWIN & ASSOCIATES; PLOTTED BY: ACH
[BH-MAN\PROJECTS\97177\TRANS\DESIGN\SIGNAL]CITYTRAF.DWG

CITYTRAF.DWG 6-11-97