PUBLIC IMPROVEMENT PLANS

FOR

THE PRESERVE

ALBUQUERQUE, NEW MEXICO

JUNE 2003

PREPARED FOR:

REMBE/CALOTT
7620 JEFFERSON ST, NE
ALBUQUERQUE, NM 87109

PREPARED BY:

ISAACSON & ARFMAN, P.A.
128 MONROE ST. NE
ALBUQUERQUE, NM 87108

SCANNED BY MESA REPRO

INDEX TO DRAWINGS

SHEET NO.	TITLE
1	COVER SHEET
2A, 2B	PLAT
3	GRADING & DRAINAGE PLAN
4	WINTERHAVEN ROAD NW UTILITY AND PAVING PLAN
5	8" PUBLIC SANITARY SEWER PLAN & PROFILE
6	UTILITY DETAILS
7	SIGNING & CONSTRUCTION CONTROL STANDARDS
8	TRAFFIC CONTROL & SIGNING EXAMPLES

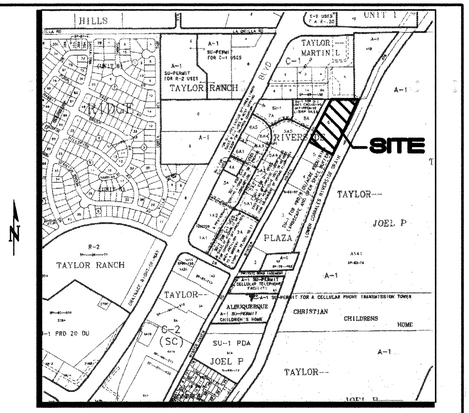

E-12 1"=750'±

VICINITY MAP

GENERAL NOTES

1. ALL WORK DETAILED ON THESE PLANS TO BE PERFORMED UNDER CONTRACT SHALL, EXCEPT AS OTHERWISE STATED OR PROVIDED FOR HEREON, BE CONSTRUCTED IN ACCORDANCE WITH THE CITY OF ALBUQUERQUE STANDARD SPECIFICATIONS FOR PUBLIC WORKS CONSTRUCTION 1986 EDITION AS AMENDED WITH UPDATE NO. 6.

2. ALL WORK ON THIS PROJECT SHALL BE PERFORMED IN ACCORDANCE WITH APPLICABLE FEDERAL, STATE, AND LOCAL LAWS, RULES, AND REGULATIONS CONCERNING CONSTRUCTION SAFETY AND HEALTH.

3. PRIOR TO CONSTRUCTION, THE CONTRACTOR SHALL EXCAVATE & VERIFY THE HORIZONTAL AND VERTICAL LOCATIONS OF ALL OBSTRUCTIONS. SHOULD A CONFLICT EXIST, THE CONTRACTOR SHALL NOTIFY THE ENGINEER SO THAT THE CONFLICT CAN BE RESOLVED WITH MINIMUM DELAY.

4. TWO (2) WORKING DAYS PRIOR TO ANY EXCAVATION, CONTRACTOR MUST CONTACT LINE LOCATING SERVICE @ 260-1990 FOR LOCATION OF EXISTING UTILITIES.

5. CONTRACTOR SHALL CONDUCT HIS OPERATIONS IN A MANNER WHICH WILL MINIMIZE INTERFERENCE WITH LOCAL TRAFFIC. CONTRACTOR SHALL COMPLY WITH ALL APPLICABLE LAWS, ORDINANCES, RULES, REGULATIONS, AND ORDERS OF ANY PUBLIC BODY HAVING JURISDICTION FOR THE SAFETY OF PERSONS OR PROPERTY, AND TO PROTECT THEM FROM DAMAGE, INJURY, OR LOSS. CONTRACTOR SHALL ERECT AND MAINTAIN, AS REQUIRED BY THE CONDITIONS AND PROGRESS OF THE WORK, ALL NECESSARY SAFEGUARDS FOR SAFETY CONTINUOUSLY AND NOT LIMITED TO NORMAL WORKING HOURS, THROUGHOUT THE DURATION OF THE PROJECT. CONTRACTOR SHALL ADHERE TO SECTION 19 OF THE GENERAL CONDITIONS OF THE CITY OF ALBUQUERQUE STANDARD SPECIFICATIONS FOR PUBLIC WORKS CONSTRUCTION, 1986, AS AMENDED WITH UPDATE NO. 6.

6. THE CONTRACTOR AGREES THAT HE SHALL ASSUME THE SOLE AND COMPLETE RESPONSIBILITY FOR THE JOB SITE CONDITIONS DURING THE COURSE OF CONSTRUCTION OF THIS PROJECT, INCLUDING SAFETY OF ALL PERSONS AND PROPERTY; THAT THIS REQUIREMENT SHALL APPLY CONTINUOUSLY AND NOT BE LIMITED TO NORMAL WORKING HOURS; AND THAT THE CONTRACTOR SHALL DEFEND, INDEMNIFY, AND HOLD HARMLESS THE OWNER & ENGINEER FROM ANY AND ALL LIABILITY REAL OR ALLEGED, IN CONNECTION WITH THE PERFORMANCE OF WORK ON THIS PROJECT, EXCEPTING LIABILITY ARISING FROM THE SOLE NEGLIGENCE OF THE OWNER OR ENGINEER.

7. TRAFFIC CONTROL: FIVE (5) WORKING DAYS PRIOR TO BEGINNING CONSTRUCTION THE CONTRACTOR SHALL SUBMIT TO THE CONSTRUCTION COORDINATION DIVISION A DETAILED CONSTRUCTION SCHEDULE. TWO (2) WORKING DAYS PRIOR TO CONSTRUCTION, THE CONTRACTOR SHALL OBTAIN A BARRICADING PERMIT FROM THE CONSTRUCTION COORDINATION DIVISION. CONTRACTOR SHALL NOTIFY BARRICADE ENGINEER (924-3400) PRIOR TO OCCUPYING AN INTERSECTION. SEE SECTION 19 OF THE SPECIFICATIONS. ALL STREET STRIPING ALTERED OR DESTROYED SHALL BE REPLACED WITH PLASTIC REFLECTORIZED PAVEMENT MARKINGS BY CONTRACTOR TO LOCATION AS EXISTING OR AS SHOWN IN THIS PLAN SET.

8. WHEN ABUTTING EXISTING PAVEMENT TO NEW, SAWCUT EXISTING PAVEMENT TO A STRAIGHT EDGE AND AT A RIGHT ANGLE, OR AS APPROVED BY THE FIELD ENGINEER. REMOVAL OF BROKEN OR CRACKED PAVEMENT WILL ALSO BE REQUIRED.

9. EXISTING CURB AND GUTTER NOT TO BE REMOVED UNDER THE CONTRACT WHICH IS DAMAGED OR DISPLACED BY THE CONTRACTOR SHALL BE REMOVED AND REPLACED BY THE CONTRACTOR AT HIS EXPENSE.

10. ALL FINAL BACKFILL FOR TRENCHES SHALL BE COMPACTED TO A MINIMUM 90% MAXIMUM DENSITY PER ASTM D-1557 AND AS DIRECTED BY SECTION 701.14.2 AND STANDARD DRAWING NUMBER 2315.

11. THE CONTRACTOR SHALL PROMPTLY CLEAN UP ANY MATERIAL EXCAVATED WITHIN THE PUBLIC RIGHT-OF-WAY OR PRIVATE ROADWAY EASEMENTS SO THAT THE EXCAVATED MATERIAL IS NOT SUSCEPTIBLE TO BEING WASHED DOWN THE STREET OR INTO ANY PUBLIC DRAINAGE FACILITY.

12. PROPOSED WATERLINE MATERIALS SHALL BE EITHER PVC PIPE MEETING AWWA C900 REQUIREMENTS (6"-12") OR DUCTILE IRON PIPE, THICKNESS CLASS 50 (6"-16").

13. ALL FITTINGS ON WATERLINES SHALL HAVE RESTRAINED JOINTS AS NOTED ON THE PLANS.

14. CONTRACTOR SHALL SUPPORT ALL EXISTING, UNDERGROUND UTILITY LINES WHICH BECOME EXPOSED DURING CONSTRUCTION. PAYMENT FOR SUPPORTING WORK SHALL BE INCIDENTAL TO WATER-LINE AND/OR SEWERLINE COSTS.

15. CONTRACTOR SHALL ASSIST THE ENGINEER/INSPECTOR IN THE RECORDING OF DATA ON ALL UTILITY LINES AND ACCESSORIES AS REQUIRED BY THE CITY OF ALBUQUERQUE FOR THE PREPARATION OF RECORD DRAWINGS. CONTRACTOR SHALL NOT COVER UTILITY LINES AND ACCESSORIES UNTIL ALL DATA HAS BEEN RECORDED.

16. THE CONTRACTOR SHALL NOTIFY THE ENGINEER NOT LESS THAN SEVEN (7) DAYS PRIOR TO STARTING WORK IN ORDER THAT THE ENGINEER MAY TAKE NECESSARY MEASURES TO INSURE THE PRESERVATION OF SURVEY MONUMENTS. CONTRACTOR SHALL NOT DISTURB PERMANENT SURVEY MONUMENTS WITHOUT THE CONSENT OF THE ENGINEER AND SHALL NOTIFY THE ENGINEER AND BEAR THE EXPENSE OF REPLACING ANY THAT MAY BE DISTURBED WITHOUT PERMISSION. REPLACEMENT SHALL BE DONE ONLY BY THE CITY SURVEYOR. WHEN A CHANGE IS MADE IN THE FINISHED ELEVATIONS OF THE PAVEMENT OF ANY ROADWAY IN WHICH A PERMANENT SURVEY MONUMENT IS LOCATED, CONTRACTOR SHALL, AT HIS OWN EXPENSE, ADJUST THE MONUMENT COVER TO THE NEW GRADE UNLESS OTHERWISE SPECIFIED. REFER TO SECTION 4.4 OF THE GENERAL CONDITIONS OF THE STANDARD SPECIFICATIONS.

17. PNM WILL PROVIDE AT NO COST TO THE CITY OR THE CONTRACTOR THE REQUIRED PERSONNEL FOR INSPECTION OR OBSERVATION DEEMED NECESSARY BY PNM WHILE THE CONTRACTOR IS EXPOSING PNM'S CABLES. HOWEVER, THE CONTRACTOR SHALL BE CHARGED THE TOTAL COST ASSOCIATED WITH REPAIRS TO ANY DAMAGED CABLES OR FOR ANY COST ASSOCIATED WITH SUPPORTING OR RELOCATING THE POLES AND CABLES DURING CONSTRUCTION.

18. WARNING--EXISTING UTILITY LINE LOCATIONS ARE SHOWN IN AN APPROXIMATE MANNER ONLY, AND SUCH LINES MAY EXIST WHERE NONE ARE SHOWN. THE LOCATION OF ANY SUCH EXISTING LINES IS BASED UPON INFORMATION PROVIDED BY THE UTILITY COMPANY, THE OWNER, OR BY OTHERS, AND THE INFORMATION MAY BE INCOMPLETE OR MAY BE OBSOLETE BY THE TIME CONSTRUCTION COMMENCES.

    THE ENGINEER HAS UNDERTAKEN NO FIELD VERIFICATION OF THE LOCATION, DEPTH, SIZE, OR TYPE OF EXISTING UNDERGROUND UTILITY LINES, MAKES NO REPRESENTATION PERTAINING THERETO, AND ASSUMES NO RESPONSIBILITY OR LIABILITY THEREFOR. THE CONTRACTOR SHALL INFORM ITSELF OF THE LOCATION OF ANY UTILITY LINE IN OR NEAR THE AREA OF THE WORK IN ADVANCE OF AND DURING EXCAVATION WORK. THE CONTRACTOR IS FULLY RESPONSIBLE FOR ANY AND ALL DAMAGE CAUSED BY ITS FAILURE TO LOCATE, IDENTIFY, AND PRESERVE ANY AND ALL EXISTING UTILITIES. THE CONTRACTOR SHALL COMPLY WITH STATE STATUTES, MUNICIPAL AND LOCAL ORDINANCES, RULES AND REGULATIONS PERTAINING TO THE LOCATION OF THESE LINES AND FACILITIES, IN PLANNING AND CONDUCTING EXCAVATION, WHETHER BY CALLING OR NOTIFYING THE UTILITIES, COMPLYING WITH "BLUE STAKES" PROCEDURES, OR OTHERWISE.

19. ANY WORK OCCURRING WITHIN AN ARTERIAL ROADWAY REQUIRES 24 HR. CONSTRUCTION.

20. ALL EXCAVATION, TRENCHING AND SHORING ACTIVITIES MUST BE ACCOMPLISHED IN ACCORDANCE WITH OSHA 29CFR 1926.650 SUBPART P.

21. CONTRACTOR SHALL MAINTAIN A GRAFFITI-FREE WORK SITE. CONTRACTOR SHALL PROMPTLY REMOVE ANY AND ALL GRAFFITI FROM EQUIPMENT, WHETHER PERMANENT OR TEMPORARY.

CERTIFICATE OF SUBSTANTIAL COMPLIANCE ON PLANS

I, FRED C. ARFMAN of the firm of ISAACSON & ARFMAN, a Registered Professional Engineer in the State of New Mexico, do hereby certify, to the best of my knowledge and belief, that the infrastructure installed as part of this project has been inspected by me or by a qualified person under my direct supervision and has been constructed in accordance with the plans and specifications approved by the City Engineer and that the original design intent of the approved plans has been met, except as noted by me on the as-built construction drawings. This Certification is based on site inspections by me or personnel under my direction and survey information provided by SURV-TEK, INC., NMPS number 9750.

Engineers Seal & Signature

FRED C. ARFMAN STATE OF NEW MEXICO 7322 REGISTERED PROFESSIONAL ENGINEER

01-08-04

SURVEYORS CERTIFICATION

I, Russ P. Hugg, New Mexico Professional Surveyor Number 9750, hereby certify that the as-built information shown hereon is the result of an actual field survey performed by me or under my direct supervision and that the same is true and correct to the best of my knowledge and belief.

Russ P. Hugg
NMPS No. 9750
12-17-2003

PROFESSIONAL SURVEYOR STATE OF NEW MEXICO NO 9750 RUSS P. HUGG

APPROVED AS RECORD DRAWINGS
DESIGN REVIEW SECTION
CITY CONSTRUCTION ENGINEER
DATE: 4/1/04

1 2 3 4 5 6 7 8 9 10 11 12 13 14 15
26 71168.81 04

REV.	SHEETS	CITY ENGINEER	DATE	USER DEPARTMENT	DATE	USER DEPARTMENT	DATE

ENGINEERS STAMP & SIGNATURE

FRED C. ARFMAN NEW MEXICO 7322 LICENSED PROFESSIONAL ENGINEER

07-15-03

APPROVALS	ENGINEER	DATE
DRC Chairman		7-30-03
Transportation		7/24/03
Water/Wastewater		7/29/03
Hydrology		7/29/03
AMAFCA		
Constr. Mngmt.		7/28/03
Constr. Coord.		7-30-03

* * * * * * * * * * * * * *
APPROVED FOR CONSTRUCTION

City Engineer 9/16/03 Date

DRB NO.
1002479

ISAACSON & ARFMAN, P.A.
Consulting Engineering Associates
128 Monroe Street N.E.
Albuquerque New Mexico
1276CVR.DWG/ks 07/15/03

City Project No. 716181

Sheet 1 Of 8

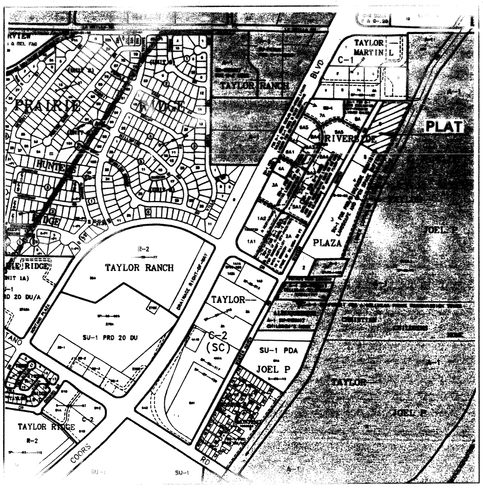

VICINITY MAP
N.T.S.

GENERAL NOTES

1. Bearings are grid based upon the New Mexico State Plane Coordinate System, Central Zone (NAD 27). Grid bearings for this project are based upon a GPS Real Time Kinematic (RTK) calibration utilizing the following published Albuquerque Control Monuments: "NM-448-N8", "NM-448-N6A", "14-F13", "6-E13", "15-F13" and "7-E12".

   Project surface coordinates were derived by applying the published Combined ground to grid factor at "NM-448-N8" of 0.99967854 .
2. Distances are ground.
3. Record plat bearings and distances where they differ from those measured by field survey are shown in parenthesis ( ).
4. All corners are a 5/8" rebar and cap stamped "HUGG L.S. 9750" unless otherwise indicated hereon.
5. Albuquerque City Zone Atlas page E-12.
6. All street centerline monumentation shall be installed at all centerline PC's, PT's, angle points and street intersections and shown thus (●). All centerline monumentation will be set using the standard four (4") aluminum monument stamped "City of Albuquerque Centerline Monument- Do not disturb, PS Number 9750" and will be set flush with the final asphalt lift.
7. Manholes will be offset at all points of curvature, points of tangency, street intersections, and all other angle points to allow use of centerline monumentation.
8. U.C.L.S. Log Number 2003210274.
9. Total plat acreage = 3.3365 Acres, more or less.
10. Number of existing Lots = 1
11. Number of New Lots created = 8
12. Number of New Parcels created = 1
13. Total Mileage of full width streets created = 0.075

DISCLOSURE STATEMENT

The purpose of this replat is to: 1.) Create the 8 residential lots as shown hereon; 2.) Dedicate the additional street right of way for Winter Haven Road N.W. to the City of Albuquerque in fee simple with warranty covenants; 3.) Show the portion of existing Temporary cul-de-sac easement vacated by 03DRB-00000-00718(VPE) and; 4.) Grant the various Public and Private easements as shown and noted hereon.

SCANNED BY
MESA REPRO

TREASURER'S CERTIFICATION

I, _____ County Treasurer of Bernalillo County, New Mexico hereby certify that the taxes are current and paid in full on the property(s) shown hereon which is/are further identified by the Uniform Property Code (UPC) number as:

_____

_____

_____

Bernalillo County Treasurer Date

APPROVALS

PNM Gas Services	Date 6-16-03
PNM Electric Services	Date 6-16-03
QWest Corporation	Date 6-16-03
Comcast Cable	Date 6-16-03

DISCLAIMER

In approving this plat, PNM Electric Services and Gas Services (PNM) did not conduct a Title Search of the properties shown hereon. Consequently, PNM does not waive nor release any easement or easement rights to which it may be entitled.

PUBLIC UTILITY EASEMENTS

PUBLIC UTILITY EASEMENTS shown on this plat are granted for the common and joint use of:

A. PNM Electric Services for installation, maintenance, and service of overhead and underground electrical lines, transformers, and other equipment and related facilities reasonably necessary to provide electrical service.

B. PNM Gas Services for installation, maintenance, and service of natural gas lines, valves and other equipment and facilities reasonably necessary to provide natural gas.

C. QWest Corporation for the installation, maintenance, and service of such lines, cable, and other related equipment and facilities reasonably necessary to provide communication services, including but not limited to ground pedestals and closures.

D. Comcast Cable for the installation, maintenance, and service of such lines, cable, and other related equipment and facilities reasonably necessary to provide Cable TV service.

Included, is the right to build, rebuild, construct, reconstruct, locate, relocate, change, remove, modify, renew, operate, and maintain facilities for the purposes described above, together with free access to, from, and over said easements, including sufficient working area space for electric transformers, with the right and privilege to trim and remove trees, shrubs or bushes which interfere with the purposes set forth herein. No building, sign, pool (aboveground or subsurface), hot tub, concrete or wood pool decking, or other structure shall be erected or constructed on said easements, nor shall any well be drilled or operated thereon. Property owners shall be solely responsible for correcting any violations of National Electrical Safety Code by construction of pools, decking, or any structures adjacent to or near easements shown on this plat.

Easements for electric transformers/switchers, as installed, shall extend ten feet (10') in front of transformer/switchgear doors and five feet (5') on each side

NOTE:

City of Albuquerque Water and Sanitary Sewer Service to the properties shown hereon must be verified and coordinated with the Public Works Department, City of Albuquerque.

THE PRESERVE

(BEING A REPLAT OF LOT 6, RIVERSIDE PLAZA)

WITHIN

SECTION 25, TOWNSHIP 11 NORTH, RANGE 2 EAST
NEW MEXICO PRINCIPAL MERIDIAN

CITY OF ALBUQUERQUE
BERNALILLO COUNTY, NEW MEXICO

MAY , 2003

PROJECT NUMBER 1002479

APPLICATION NUMBER 03DRB-00000-00718

APPROVALS

Traffic Engineer, City of Albuquerque Public Works Department	Date
City Surveyor, City of Albuquerque Public Works Department	Date 6-5-03
Utility Development Division, City of Albuquerque Public Works Department	Date
Albuquerque Metropolitan Arroyo Flood Control Authority	Date
City Engineer, City of Albuquerque Public Works Department	Date
Property Management, City of Albuquerque	Date
Parks and Recreation, City of Albuquerque	Date
Middle Rio Grande Conservancy District	Date

APPROVAL as specified by the Albuquerque Subdivision Ordinance

Chair, Albuquerque Development Review Board	Date

SURVEYOR'S CERTIFICATION

I, Russ P. Hugg, New Mexico Professional Surveyor Number 9750, hereby certify that this plat of survey was prepared from field notes of an actual ground survey performed by me or under my supervision; that it meets the Standards for Land Surveys in New Mexico as adopted by the New Mexico State Board of Registration for Professional Engineers and Professional Surveyors; that it meets the minimum requirements for surveys and monumentation of the Bernalillo County and City of Albuquerque Subdivision Ordinances; that it shows all easements of record; and that it is true and correct to the best of my knowledge and belief.

Russ P. Hugg
NMPS No. 9750
May 14, 2003

PROFESSIONAL SURVEYOR STATE OF NEW MEXICO No. 9750 RUSS P. HUGG

SHEET 1 OF 3

SURVOTEK, INC.
Consulting Surveyors
5643 Paradise Blvd. N.W. Albuquerque, New Mexico 87114
Phone: 505-897-3366
Fax: 505-897-3377

THE PRESERVE

(BEING A REPLAT OF LOT 6, RIVERSIDE PLAZA)

WITHIN

SECTION 25, TOWNSHIP 11 NORTH, RANGE 2 EAST
NEW MEXICO PRINCIPAL MERIDIAN

CITY OF ALBUQUERQUE
BERNALILLO COUNTY, NEW MEXICO

MAY , 2003

LEGAL DESCRIPTION

Lot numbered Six (6) of Riverside Plaza, as the same is shown and designated on the plat entitled "LOTS 2 THRU 6 AND TRACTS 1 THRU 8, RIVERSIDE PLAZA (BEING A REPLAT OF A WESTERLY PORTION OF TRACT A-1-A-1, LANDS OF JOEL P. TAYLOR), WITHIN SECTION 25, TOWNSHIP 11 NORTH, RANGE 2 EAST, NEW MEXICO PRINCIPAL MERIDIAN, BERNALILLO COUNTY, NEW MEXICO", filed in the office of the County Clerk of Bernalillo County, New Mexico on May 18, 1999 in Plat Book 99C, page 121.

Said lot contains 3.3365 acres, more or less.

FREE CONSENT AND DEDICATION

SURVEYED and REPLATTED and now comprising THE PRESERVE (BEING A REPLAT OF LOT 6, RIVERSIDE PLAZA) WITHIN SECTION 25, TOWNSHIP 11 NORTH, RANGE 2 EAST, NEW MEXICO PRINCIPAL MERIDIAN, CITY OF ALBUQUERQUE, BERNALILLO COUNTY, NEW MEXICO with the free consent of and in accordance with the wishes and desires of the undersigned owner(s) and proprietor(s) thereof. Said owner(s) and proprietor(s) do hereby dedicate the additional street right of way for Winter Haven Road N.W. to the City of Albuquerque in fee simple with warranty covenants. Said owner(s) and proprietor(s) do hereby grant all private and public easements as shown hereon. Said owner(s) and proprietor(s) do hereby consent to all of the foregoing and do hereby represent that they are so authorized to act.

OWNER
Winter Haven Partners, LLC

Jay Rembe

ACKNOWLEDGMENT

STATE OF NEW MEXICO
COUNTY OF BERNALILLO SS

This instrument was acknowledged before me on this 3 day of June, by Jay Rembe.

My commission expires 8-11-06

Notary Public

OFFICIAL SEAL
Margo Marlene Dedrick
NOTARY PUBLIC
STATE OF NEW MEXICO
My Commission Expires 8-11-06

LINE TABLE

LINE	LENGTH	BEARING
L1	32.09	N61°38'17"W
L2	34.50	N61°32'28"W
L3	23.38	N61°38'17"W
L4	22.34	N61°38'17"W
L5	22.34	N61°38'17"W
L6	9.26	S40°41'00"E
L7	15.00	S40°41'00"E
L8	21.89	S40°41'00"E

CURVE TABLE

CURVE	LENGTH	RADIUS	TANGENT	CHORD	CHORD BEARING	DELTA
C1	12.08	20.00	6.23	11.90	S45°40'13"W	24°42'34"
C2	65.78	49.67	38.72	61.08	N25°02'19"E	75°52'46"
C3	8.63	20.00	4.38	8.56	S40°43'00"W	09°54'22"
C4	3.46	20.00	1.73	3.45	S58°01'30"W	34°37'01"
C5	147.17	250.00	75.79	145.06	S30°05'16"W	33°43'45"
C6	16.33	50.00	8.24	16.26	N37°35'40"E	18°42'57"
C7	65.75	250.00	33.07	65.56	N20°42'08"E	15°04'09"
C8	101.52	250.00	51.47	100.83	S24°48'04"W	23°16'02"
C9	16.21	20.00	8.58	15.77	N49°31'08"E	46°27'01"
C10	54.67	238.00	27.46	54.55	N19°42'46"E	13°09'42"
C11	104.83	262.00	53.13	104.13	S24°35'40"W	22°55'30"
C12	98.38	238.00	49.90	97.68	S25°00'34"W	23°41'01"
C13	68.91	262.00	34.65	68.71	N20°42'08"E	15°04'09"
C14	20.25	62.00	10.22	20.16	N37°35'40"E	18°42'56"
C15	143.34	238.00	73.92	141.19	S29°41'53"W	34°30'30"
C16	151.03	262.00	77.68	148.95	S30°26'16"W	33°01'45"
C17	12.41	38.00	6.26	12.36	N37°35'40"E	18°42'56"
C18	10.43	20.00	5.34	10.31	N10°05'41"E	29°52'40"
C19	42.61	262.00	21.35	42.56	S18°34'55"W	9°19'02"
C20	15.04	565.00	7.52	15.04	S24°23'31"W	1°31'29"
C21	10.00	284.25	5.00	10.00	N28°21'43"E	2°00'57"
C22	33.03	262.00	16.54	33.01	S16°44'36"W	7°13'23"
C23	11.30	262.00	5.65	11.30	S21°35'25"W	2°28'15"
C24	16.51	262.00	8.26	16.51	S24°37'52"W	3°36'39"

PROFESSIONAL SURVEYOR STATE OF NEW MEXICO No. 9750 RUSS P. HUGG

SHEET 2 OF 3

SURVOTEK, INC.
Consulting Surveyors
5643 Paradise Blvd. N.W. Albuquerque, New Mexico 87114
Phone: 505-897-3366
Fax: 505-897-3377

716181

2A of 8

SCANNED BY
MESA REPRO

THE PRESERVE

(BEING A REPLAT OF LOT 6, RIVERSIDE PLAZA)

WITHIN

SECTION 25, TOWNSHIP 11 NORTH, RANGE 2 EAST
NEW MEXICO PRINCIPAL MERIDIAN

CITY OF ALBUQUERQUE
BERNALILLO COUNTY, NEW MEXICO

MAY, 2003

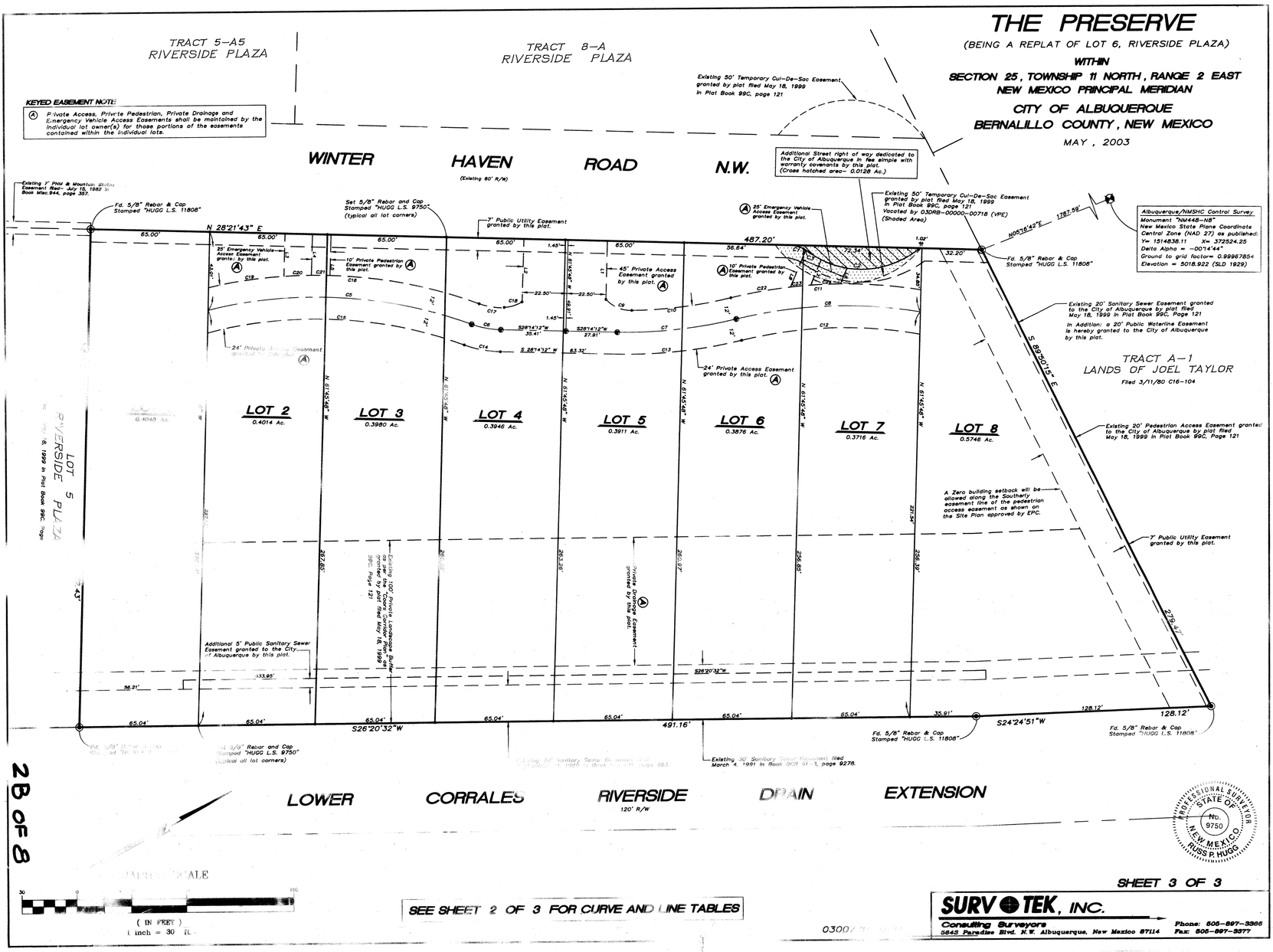

SEE SHEET 2 OF 3 FOR CURVE AND LINE TABLES

SHEET 3 OF 3

SURV-TEK, INC.
Consulting Surveyors
5645 Paradise Blvd. N.W. Albuquerque, New Mexico 87114
Phone: 505-897-3366
Fax: 505-897-3377

0300/

2B OF 8

71481

SURVEYORS CERTIFICATION

I, Russ P. Hugg, New Mexico Professional Surveyor Number 9750, hereby certify that the as-built information shown hereon is the result of an actual field survey performed by me or under my direct supervision and that the same is true and correct to the best of my knowledge and belief.

Russ P. Hugg
NMPS No. 9750
12-17-, 2003

PROFESSIONAL SURVEYOR STATE OF NEW MEXICO NO. 9750 RUSS P. HUGG

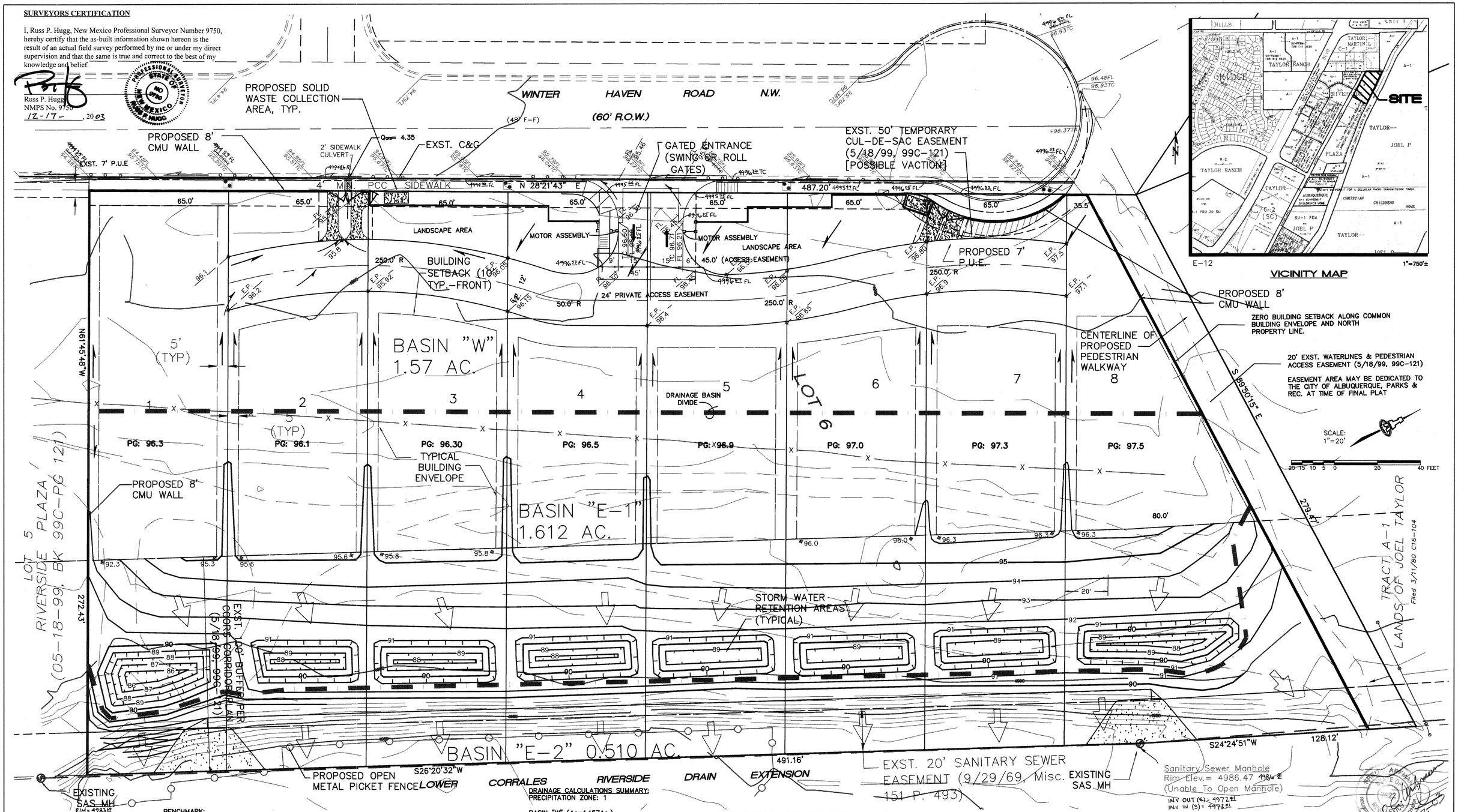

VICINITY MAP

SCANNED BY MESA REPRO

OWNER:
THE STROSNIDER COMPANY
6121 INDIAN SCHOOL RD. NE STE. 275
ALBUQUERQUE, NM 87110

ENGINEER:
ISAACSON & ARFMAN P.A.
128 MONROE ST. NE
ALBUQUERQUE, NM 87106

SURVEYOR:
SURV-TEK INC.
5643 PARADISE BLVD. NW
ALBUQUERQUE, NM 87114

LEGAL DESCRIPTION:
LOT 6, RIVERSIDE PLAZA, BERNALILLO COUNTY, NEW MEXICO (MAY 18, 1999; BOOK 99C, PAGE 121)

BENCHMARK:
ACS "NM-448-NTA", NEW MEXICO STATE PLANE, CENTRAL ZONE (NAD 1927)
ELEV.= 5006.41

FLOOD ZONE DESIGNATION:
ZONE X, THIS SITE IS OUTSIDE OF THE 100 YR. FLOOD PLAIN AS DESIGNATED ON PANEL 116 OF 825, FEMA FLOOD INS. RATE MAPS, SEPTEMBER 20, 1996.

EXISTING CONDITIONS:
LOT 6 IS 100% UNDEVELOPED WINTERHAVEN RD. NW(60' R.O.W) IS FULLY DEVELOPED EXCEPT FOR SIDEWALK AND ABUTS THE WESTERLY PROPERTY LINE. NO STORM WATERS ARE ACCEPTED FROM THE WEST. MINOR SHEET FLOWS CURRENTLY ENTER THE SITE ON THE NORTH AND VERY MINIMAL STORM WATER CROSS ONTO THE SITE FROM THE SOUTH. ALL STORM WATERS GENERATED ON THIS SITE CURRENTLY SHEET FLOW TO THE EAST WHERE THEY ARE RETAINED BY NATURE FEATURES OR DISCARDED INTO THE LOWER CORRALES MAIN DRAIN.

PROPOSED CONDITIONS:
THE PROPOSED EIGHT(8) LOT SUBDIVISION WILL CONSIST OF DETACHED SINGLE FAMILY RESIDENCES. ACCESS OFF OF WINTER HAVEN RD. SHALL CONSIST OF A SINGLE VEHICULAR ENTRANCE WITH A PAVED INTERNAL COMMON ACCESS WAY ALONG THE EASTERLY PORTION OF THE INTERIOR SIX(6) LOTS. STORM WATERS GENERATED FROM THE WESTERLY 100 FEET SHALL BE COLLECTED IN THE PAVED ACCESS WAY AND CONVEYED TO A SINGLE DISCHARGE POINT ONTO WINTER HAVEN RD. THE REMAINING SITE STORM WATERS ARE ALLOWED TO SHEET FLOW TO THE EAST AND FINALLY RETAINED ONSITE ALONG THE EASTERLY PROPERTY LINE WITHIN INDIVIDUAL LOT RETENTION PONDS. PONDS ARE SIZED TO HOLD THE 10 DAY-100 YR. STORM EVENT. POND REQUIRED VOLUMES AND CAPACITIES ARE PRESENTED ON THE FOLLOWING TABLE:

DRAINAGE CALCULATIONS SUMMARY:
PRECIPITATION ZONE: 1

BASIN "W" (Ac=1.157Ac.)

LAND TREAT.	%	Ac.	CFS/Ac	Q_{CFS}
B	25	0.29	2.03	0.59
D	75	0.86	4.37	3.76
				Q_{CFS}= 4.35

BASIN "E-1" (Ac=1.612Ac.)

LAND TREAT.	%	Ac.	INCHES	$V_{CU.FT.}$
B	38	0.93	0.67	2262
D	62	0.68	1.97	4863
			$V_{CU.FT.}$=	7125 CU. FT.

BASIN "E-2" (Ac=0.510Ac.)

LAND TREAT.	%	Ac.	INCHES	$V_{CU.FT.}$
D	100	0.51	0.67	1240

REQUIRED POND RETENTION

LAND TREAT.	%	Ac.	INCHES	$V_{CU.FT.}$
B	68	0.93	0.67	2262
D	32	0.68	2x1.97	9726
			Σ=	11,988 CU. FT.

STORM WATERS SHALL BE ALLOWED TO DISCHARGE OFF OF THE SIDE-SLOPE PER HISTORICAL RUNOFF PATTERNS.

LOT NO.	POND CAP. (CU. FT.)	REQUIERD VOL. (100YR.-10DY.)
1	1762	1442
2	1638	1443
3	1520	1442
4	1506	1443
5	1579	1442
6	1500	1443
7	1508	1442
8	1968	1891

* PONDS SHALL BE FREE FORM AND RECONFIGURED TO BE IN CORPORATED INTO THE FINAL SITE LANDSCAPING WHILE PROVIDING EQUAL POND CAPACITY.

LEGEND

	EXISTING CONTOUR	INV=72.5	INVERT ELEVATION
	PROPOSED CONTOUR	6"	DRAIN LINE WITH SIZE
◆ 78.3	PROPOSED SPOT ELEVATION		STORM DRAIN MANHOLE
	FLOW ARROW		FLOW ARROW
FF = 6881.0	FINISH FLOOR ELEVATION		EXISTING FLOW
	SIDEWALK CULVERT		SHEET FLOW
TC 81.9 / FL 81.4	TOP OF CURB / FLOWLINE ELEVATION	E.P.	EDGE OF PAVEMENT
	PROPOSED FLOODWALL	FL	FLOWLINE
② ⊞	AREA DRAIN	PG	PAD GRADE

THE PRESERVE

LOT 6, RIVERSIDE PLAZA

GRADING/ DRAINAGE PLAN

ISAACSON & ARFMAN, P.A.
Consulting Engineering Associates
128 Monroe Street N.E.
Albuquerque New Mexico

1276GRD.DWGjts | 07/15/03

SHEET 3 OF 8

716181

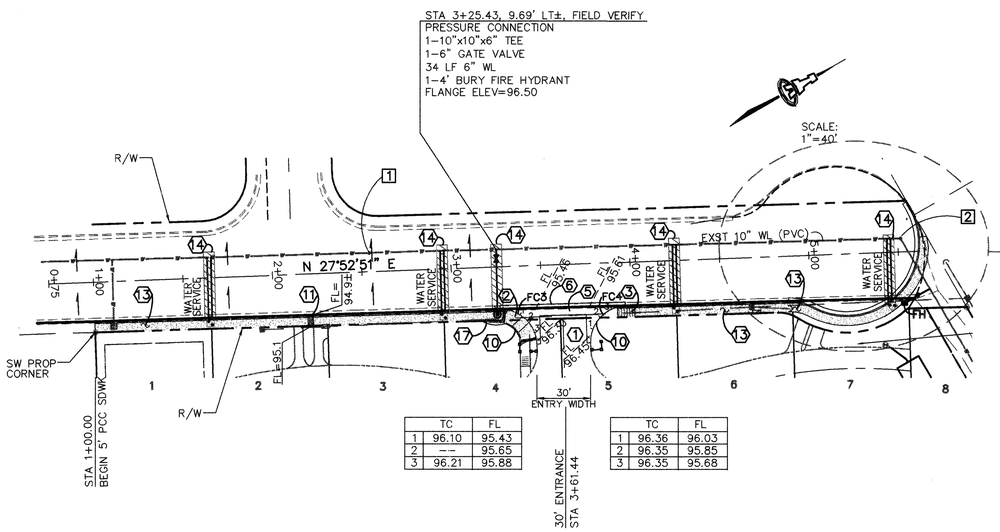

	TC	FL
1	96.10	95.43
2	---	95.65
3	96.21	95.88

	TC	FL
1	96.36	96.03
2	96.35	95.85
3	96.35	95.68

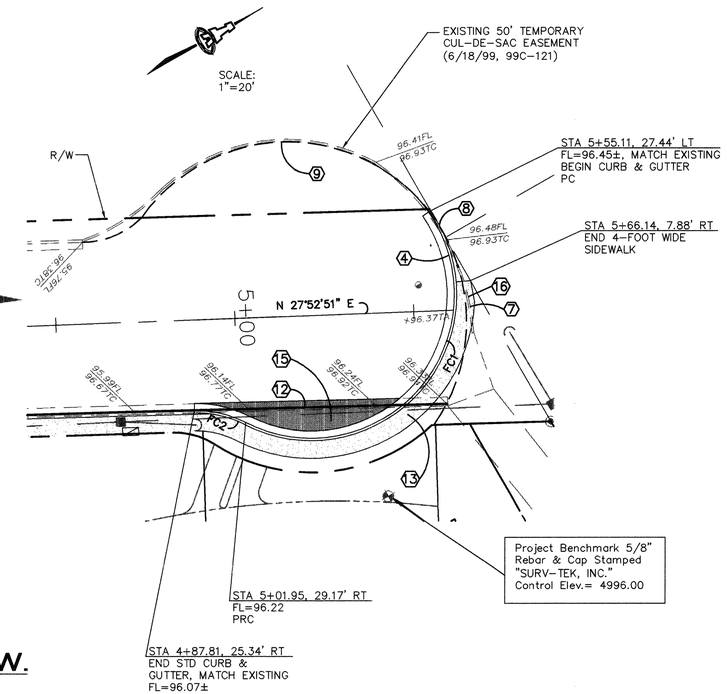

WINTERHAVEN ROAD N.W.

WATER SERVICE TABLE

LOT NO.	STATION WATER, LENGTH
1	1+65.00, 35'
2	
3	2+95.00, 35'
4	
5	4+25.00, 35'
6	
7	5+44.50, 36'
8	

ALL WATER SERVICES ARE DOUBLE

WATER SHUT-OFF PLAN

SHUT-OFF VALVES 1 & 2 TO PROVIDE NON-PRESSURE CONNECTION. THE CONTRACTOR SHALL CONTACT WATER SYSTEMS DIVISION (857-8200) 7 WORKING DAYS PRIOR TO SHUT-OFF OR TURN-ON AT VALVES. ONLY CITY PERSONNEL ARE ALLOWED TO OPERATE VALVES.

RESTRAINED JOINT LENGTHS, L_T, FOR TEES, (FT.) ALL JOINTS AT THE TEE MUST BE RESTRAINED.

SIZE	RUN	BRANCH
12x12x12	15	17
12x12x10	10	18
12x12x8	6	19
12x12x6	3	19
12x12x4	1	19
10x10x10	12	18
10x10x8	8	15
10x10x6	4	16
10x10x4	2	4
8x8x8	9	20
8x8x6	5	17
8x8x4	2	15
6x6x6	6	20
6x6x4	2	20

THIS TABLE IS BASED UPON THE FOLLOWING CRITERIA:

DEPTH OF BURY	3.0 FT. MINIMUM
FACTOR OF SAFETY	1.25
MATERIAL	PVC PIPE
SOIL TYPE:	GM/SM – SILTY GRAVELS AND SILTY SANDS, GRAVEL-SAND-SILT MIXTURES.
TEST PRESSURE	150 PSI
TRENCH TYPE 4:	PIPE BEDDED IN SAND, GRAVEL, OR CRUSHED STONE TO DEPTH OF 1/8 PIPE DIAMETER, 4 INCH MINIMUM; BACKFILL COMPACTED TO TOP OF PIPE.

DIFFERENT CRITERIA, E.G., DUCTILE IRON PIPE, GREATER DEPTH OF BURY, ETC., WILL REQUIRE DIFFERENT RESTRAINED LENGTHS. THESE MUST BE CALCULATED BY A QUALIFIED PROFESSIONAL ENGINEER AND APPROVED BY THE PUBLIC WORKS DEPARTMENT.

RESTRAINED JOINT LENGTHS, L_T, FOR HORIZONTAL BENDS, VALVES, AND DEAD ENDS, (FT.)

SIZE	HORZ. BENDS 90°	45°	22 1/2°	11 1/4°	VALVES & DEAD ENDS
12	30	12	6	3	85
10	26	11	5	3	72
8	22	9	4	2	60
6	17	7	3	2	46
4	12	5	2	1	32

RESTRAINED JOINT LENGTHS, L_T, FOR REDUCERS, (FT.) MINIMUM UNOBSTRUCTED, STRAIGHT-RUN LENGTH: RESTRAIN EITHER LARGE PIPE, OR SMALL PIPE.

SIZE	LARGE SIDE	SMALL SIDE	SIZE	LARGE SIDE	SMALL SIDE
12x10	25	30	10x6	44	73
12x8	45	68	10x4	58	141
12x6	62	121	8x6	25	33
12x4	74	213	8x4	43	83
10x8	24	30	6x4	24	35

NOTES:

1. ALL MECHANICAL JOINTS SHALL BE RESTRAINED AT THE FITTING.
2. THE CONTRACTOR SHALL PROVIDE A MINIMUM PIPE LENGTH OF 20 LF FROM ALL MECHANICAL JOINTS. ALL PIPE JOINTS WITHIN 20 LF OF A MECHANICAL JOINT SHALL BE RESTRAINED AT THE CONTRACTOR'S EXPENSE.
3. THE CONTRACTOR SHALL RESTRAIN ALL PIPE JOINTS IN THE SPECIFIED DISTANCE LISTED IN THE TABLE ON THIS SHEET.
4. THE CONTRACTOR SHALL RESTRAIN ALL FIRE HYDRANT JOINTS FROM THE TEE ON THE MAIN TO THE FIRE HYDRANT FLANGE.

RESTRAINED JOINT LENGTHS FOR WATERLINE FITTINGS

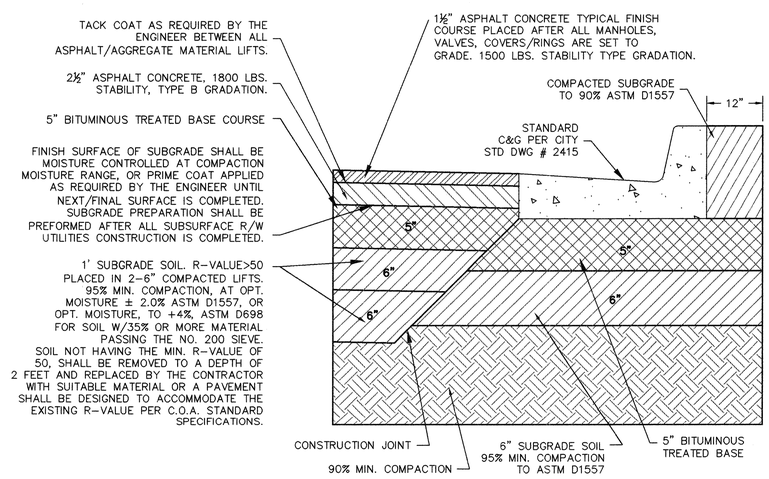

MATCH EXISTING PAVING, REFER TO CITY PROJECT #608982

WINTER HAVEN ROAD PAVING SECTION

NTS

GENERAL UTILITY NOTES

1. CONSTRUCT ALL DOUBLE WATER SERVICES PER COA STD DWG #2361, #2362, & #2363. SEE SHEET 6 FOR DRAFT COA STD DWG #2362.
2. SEE THIS SHEET FOR WATER SHUT-OFF PLAN.
3. SEE THIS SHEET FOR RESTRAINED JOINT LENGTHS FOR WATER LINE FITTINGS.
4. CONSTRUCT FIRE HYDRANTS PER DESIGNATED DEPTHS & LENGTHS PER COA STD DWG #2340.
5. SEE COA DRAFT STD DWGS #2326 & 2328 ON SHEET 6 FOR VALVE RING & COVER DETAIL.

KEYED PAVING NOTES

1. CONSTRUCT PRIVATE ENTRANCE PER COA STD DWG #2426.
2. CONSTRUCT HANDICAP RAMP PER COA STD DWG #2441, CASE II.
3. CONSTRUCT UNIDIRECTIONAL HANDICAP RAMP PER COA STD DWG #2426.
4. STANDARD CURB & GUTTER PER COA STD DWG #2415.
5. CONSTRUCT PCC VALLEY GUTTER 6' WIDE, 1 1/2" INVERT PER COA STD DWG #2420.
6. REMOVE & DISPOSE 70 LF DEPRESSED CURB & GUTTER.
7. REMOVE & DISPOSE 37 LF ASPHALT CURB.
8. TRANSITION FROM 6-INCH HIGH ASPHALT CURB TO 8-INCH HIGH STD CURB & GUTTER OVER 5 FEET.
9. EXISTING 6-INCH HIGH ASPHALT CURB.
10. TRANSITION FROM STANDARD TO MOUNTABLE CURB THRU RETURN PER COA STD DWG #2418.
11. STA 2+20.54, 23' RT--CONSTRUCT 1-24" SIDEWALK CULVERT PER COA STD DWG #2236.
12. REMOVE & DISPOSE 71 LF STD CURB & GUTTER.
13. CONSTRUCT 5-FOOT WIDE SIDEWALK PER COA STD DWG #2430.
14. SAWCUT, REMOVE AND REPLACE 25 SY PAVING PER COA STD DWG #2465. HAND BORE WATER SERVICE OPENING BELOW 12" SUBGRADE. DISPLACE C&G, STONE TO BE REMOVED AND REPLACED AT CONTRACTOR'S EXPENSE.
15. 32 SY PAVING--ASPHALT CONCRETE TO BE 2" THICKER THAN EXISTING ASPHALT PAVEMENT.
16. TRANSITION FROM 5-FOOT TO 4-FOOT WIDE SIDEWALK OVER 5 FEET.
17. PROVIDE ADDITIONAL PCC SIDEWALK TO ACCOMMODATE APPROPRIATE CLEARANCE PER C.O.A. STD. DWG. 2431.

FACE OF CURB CURVE TABLE

CURVE	RADIUS	LENGTH	DELTA
FC1	40.00	106.24	152°11'05"
FC2	30.00	14.80	28°16'09"
FC3	20.00	31.37	89°51'37"
FC4	20.00	31.36	89°50'22"

ISAACSON & ARFMAN, P.A.
Consulting Engineering Associates
128 Monroe Street N.E.
Albuquerque New Mexico
1276PV1.DWG/ts 07/24/03

CITY OF ALBUQUERQUE
PUBLIC WORKS DEPARTMENT
ENGINEERING GROUP

TITLE: THE PRESERVE
WINTERHAVEN ROAD N.W.
UTILITY AND PAVING PLAN

Design Review Committee: APPROVED JUL 30 2003 DESIGN REVIEW COMMITTEE
City Engineer Approval: APPROVED SEP 16 2003 CITY ENGINEER
Last Design Update | Mo./Day/Yr. | Mo./Day/Yr.

City Project No. 716181 | Zone Map No. E-12 | Sheet 4 Of 8

AS-BUILT INFORMATION
CONTRACTOR SALS BROS. CONST
WORK STAKED BY SURV-TEK DATE 10/03
SURVEYING BY SURV-TEK DATE 01/04
ACCEPTANCE BY CITY OF ALBUQUERQUE
FIELD VERIFICATION BY SURV-TEK DATE 11/03
DRAWINGS CORRECTED BY SURV-TEK DATE 01/04
MICRO-FILM INFORMATION
RECORDED BY DATE
(COA) Irv Peche: Jim Pino

BENCH MARKS
ALBUQUERQUE CONTROL SURVEY MONUMENT "7-E12"
ELEV=5004.24 (NGVD 29)

SURVEY INFORMATION
FIELD NOTES
1. SURV-TEK 01/03

ENGINEER'S SEAL
FRED C. ARFMAN NEW MEXICO 7322 LICENSED PROFESSIONAL ENGINEER
07-24-03

NO.	DATE	REMARKS	BY

REVISIONS

DESIGN
DESIGNED BY FCA DATE 6/03
DRAWN BY ANW DATE 6/03
CHECKED BY FCA DATE 6/03

SCANNED BY MESA REPRO

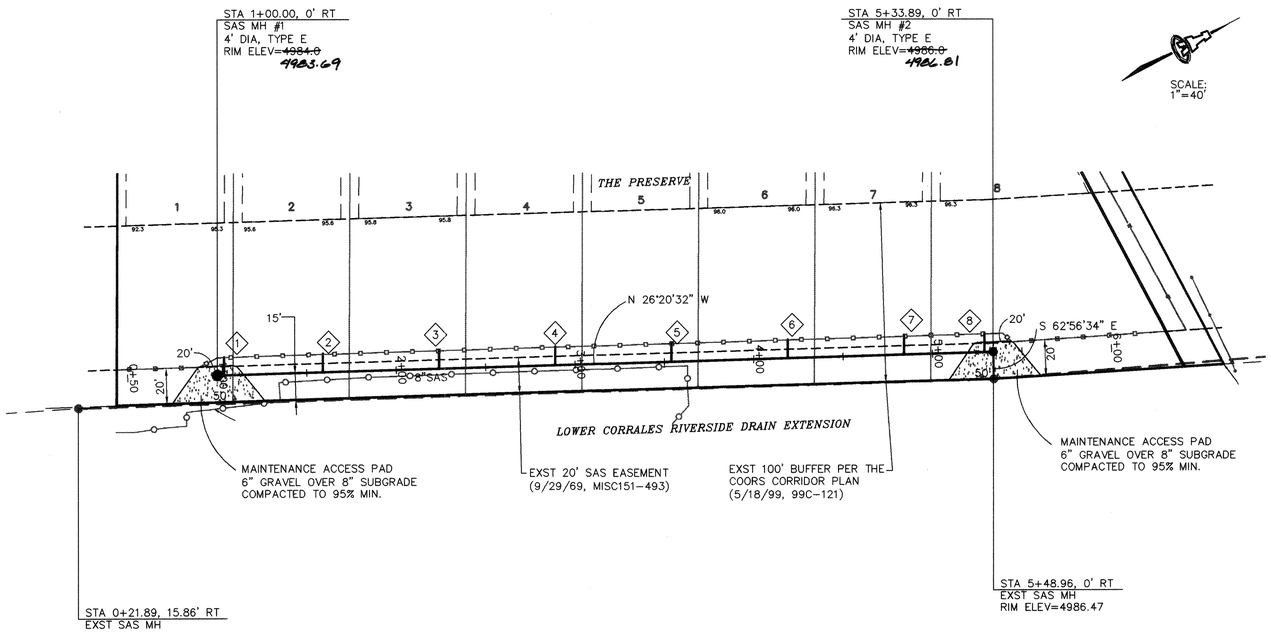

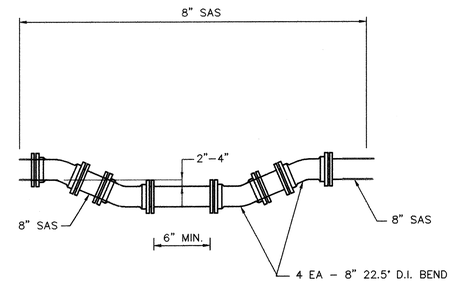

INVERTED SIPHON
NTS

8" PUBLIC SANITARY SEWER

SCALES:
1"=40' HOR.
1"=10' VERT.

Elevation Datum: NGVD 29

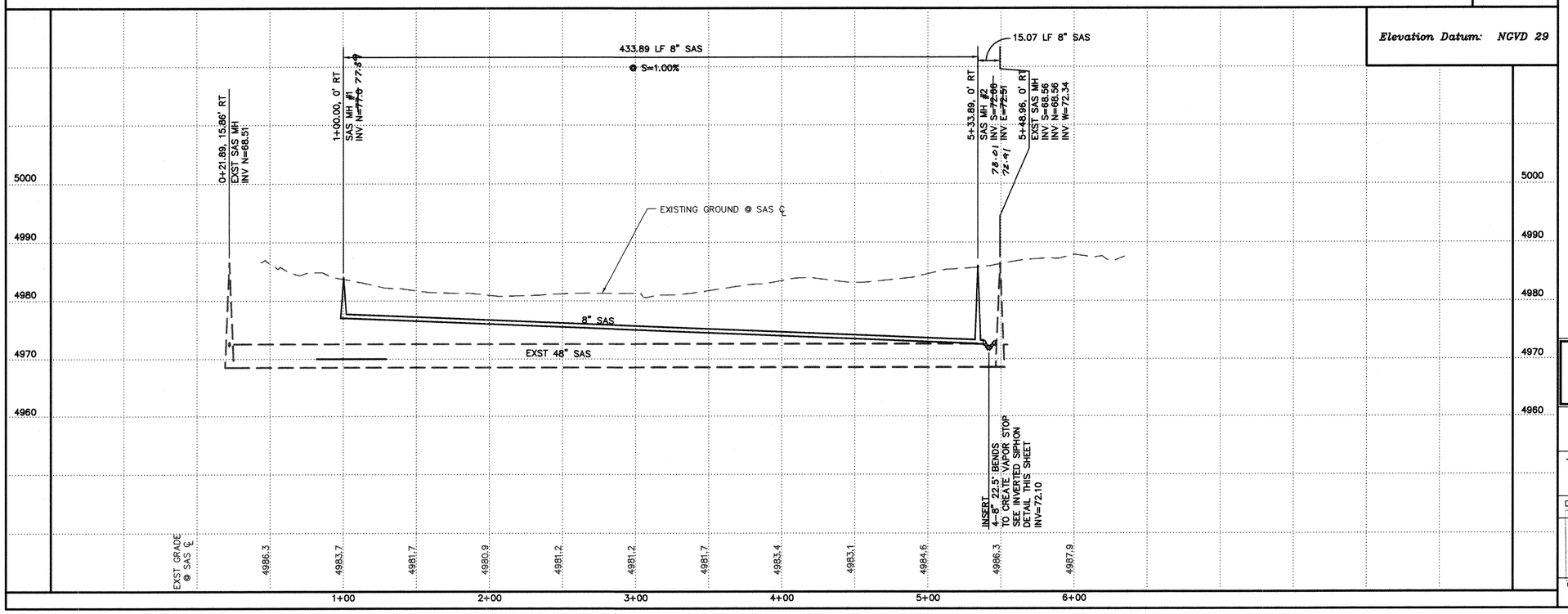

GENERAL NOTES

1. CONSTRUCT SAS SERVICES PER COA STD DWG #2125.

SAS SERVICE TABLE ◇

LOT NO.	STATION SAS, LENGTH
1	1+03.74, 10.5'
2	1+58.94, 10.5'
3	2+23.97, 10.5'
4	2+88.84, 10.5'
5	3+53.88, 10.5'
6	4+18.92, 10.5'
7	4+83.95, 10.5'
8	5+28.89, 10.5'

AS-BUILT INFORMATION
CONTRACTOR SAUS BROS. Const
WORK STAKED BY SURV-TEK DATE 10/02
WORK STAKED BY ARCHAEOLOGY DATE 01/04
ACCEPTANCE BY
FIELD VERIFICATION BY SURV-TEK DATE 01/03
DRAWINGS CORRECTED BY SURV-TEK DATE 01/04
MICRO-FILM INFORMATION
RECORDED BY DATE
BENCH MARKS
ALBUQUERQUE CONTROL SURVEY MONUMENT "7-E12"
ELEV=5004.24 (NGVD 29)
SURVEY INFORMATION
FIELD NOTES
1. SURV-TEK 01/03

ENGINEER'S SEAL
FRED C. ARFMAN NEW MEXICO 7322 LICENSED PROFESSIONAL ENGINEER
07.15.03

NO.	DATE	REMARKS	BY
		REVISIONS	

DESIGN
DESIGNED BY FCA DATE 6/03
DRAWN BY ANW DATE 6/03
CHECKED BY FCA DATE 6/03

ISAACSON & ARFMAN, P.A.
Consulting Engineering Associates
128 Monroe Street N.E.
Albuquerque New Mexico
1276UTL1.DWGrfh 7/08/03

CITY OF ALBUQUERQUE
PUBLIC WORKS DEPARTMENT
ENGINEERING GROUP

TITLE: THE PRESERVE
8" PUBLIC SANITARY SEWER

Design Review Committee: APPROVED JUL 30 2003 DESIGN REVIEW COMMITTEE
City Engineer Approval: APPROVED SEP 16 2003 CITY ENGINEER
Last Design Update | Mo./Day/Yr. | Mo./Day/Yr.

City Project No. 716181 | Zone Map No. E-12 | Sheet 5 Of 8

SCANNED BY MESA REPRO

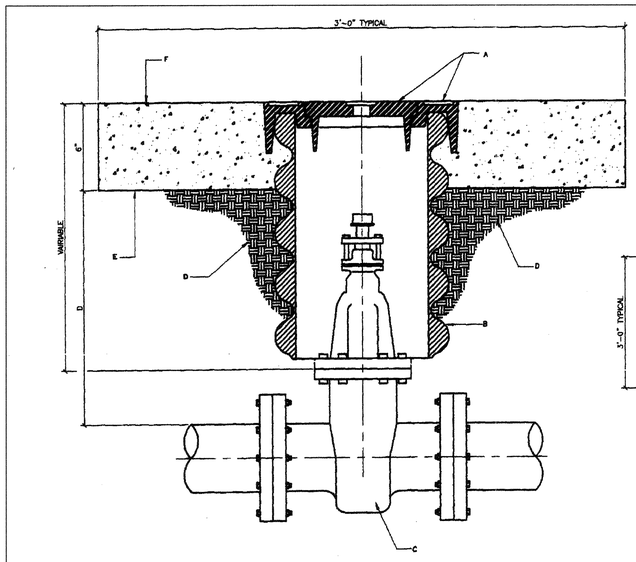

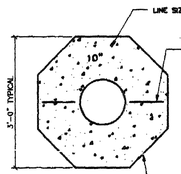

TOP PLAN

GENERAL NOTES:

A VALVE BOX RING AND COVER. SEE DWG. 2328.

B 10" DIAMETER RIBBED OR CORRUGATED PVC OR PE PIPE WITH SMOOTH INTERIOR.

C NEW OR EXISTING VALVE.

D COMPACTED BACKFILL. SOIL OR BASE COURSE MATERIAL (95% COMPACTION). SEE SECTION 701.

E 3'-0"x3'-0" OCTAGONAL CONCRETE COLLAR. COLLAR IS TO BE TAPERED IN UNPAVED ROADWAYS AND FLUSH IN PAVED ROADWAY. CONCRETE STRENGTH SHALL BE PER SECTION 101 OF THE STANDARD SPECIFICATIONS, LATEST EDITION.

F TOP OF CONCRETE COLLAR SHALL BE STAMPED WITH LINE SIZE AND DIRECTION. MINIMUM LETTER SIZE SHALL BE 3" IN HEIGHT.

REVISIONS	CITY OF ALBUQUERQUE WATER VALVE BOX
	DWG. 2326 JANUARY 2002

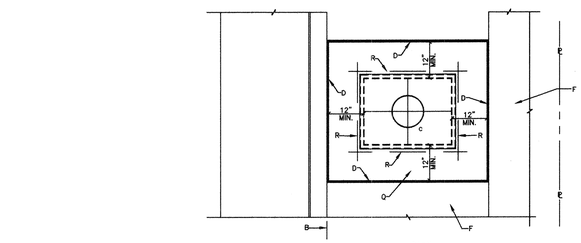

PLAN

SEE DWG. 2361 FOR TYPICAL INSTALLATIONS

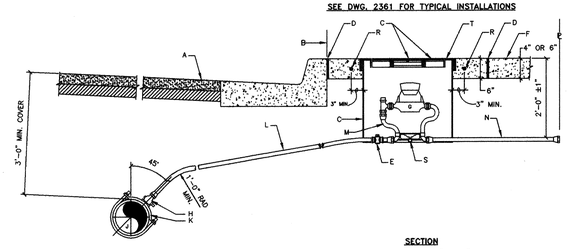

SECTION

SERVICE LINE FOR 3/4" - 1" METER

GENERAL NOTES:

1 THE METER SHALL BE SET UTILIZING A COPPER-SETTER. COPPER-SETTER HEIGHT 10" FOR 1" METER. 7" FOR 3/4" METER.

2 THE VALVE AND METER REGISTER BOX SHALL BE LOCATED UNDER THE LID OPENING. WHERE TWO METERS ARE TO BE INSTALLED IN A SINGLE METER BOX, THE METER REGISTERS SHALL BE WITHIN READING RANGE OF THE LID OPENING.

3 METER BOX LOCATION TO CONFORM TO DWG. 2361.

4 WHEN CONTRACTOR DOES NOT INSTALL METER, CONTRACTOR SHALL PROVIDE REMOVABLE PLUGS FOR END OF COPPER-SETTER.

5 EXISTING CONCRETE TO BE SAWCUT.

CONSTRUCTION NOTES:

A STREET SURFACE.

B BACK OF CURB.

C CAST IRON METER BOX, COVER AND LID. SEE DWG. 2368 OR 2369.

D 1/2" EXPANSION JOINT.

E CURB STOP, LOCATE INSIDE METER BOX.

F SIDEWALK OR DRIVEPAD.

G METER. TOP OF METER TO BE 12"-18" BELOW COVER.

H CORP STOP.

J MAIN WATER LINE.

K TAPPING SADDLE.

L COPPER SERVICE LINE.

M COPPER SETTER.

N TAILPIECE TO PROPERTY LINE WITH INSTA-TITE I.P.T. CAPPED FITTING.

Q CONCRETE PAD REQUIRED IN ALL AREAS.

R #4 REBAR CONTINUOUS ALL AROUND METER BOX.

S STABILIZER BAR. 12" LONG X 1/2" DIAMETER GALVANIZED STEEL PIPE.

T METER BOX LID SHALL BE FLUSH WITH SURROUNDING SIDEWALK.

REVISIONS	CITY OF ALBUQUERQUE WATER 3/4" - 1" METERED SERVICE LINE INSTALLATION
	DWG. 2362 MAR 2001

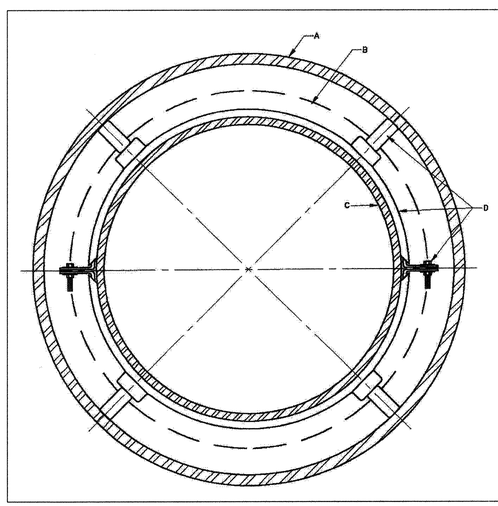

1 METHOD OF END CLOSURE TO BE DESIGNED TO SUIT CONDITIONS.

CONSTRUCTION NOTES:

A WELDED STEEL PIPE CASING. DIAMETER AND WALL THICKNESS TO BE DESIGNED TO SUIT CONDITIONS.

B BELL DIA. OF CARRIER PIPE.

C CARRIER PIPE.

D MANUFACTURED CASING SPACER. INSTALLATION AND SPACING PER MANUFACTURER'S RECOMMENDATIONS.

REVISIONS	CITY OF ALBUQUERQUE WATER BORING INSTALLATION
	DWG. 2380 JANUARY 2002

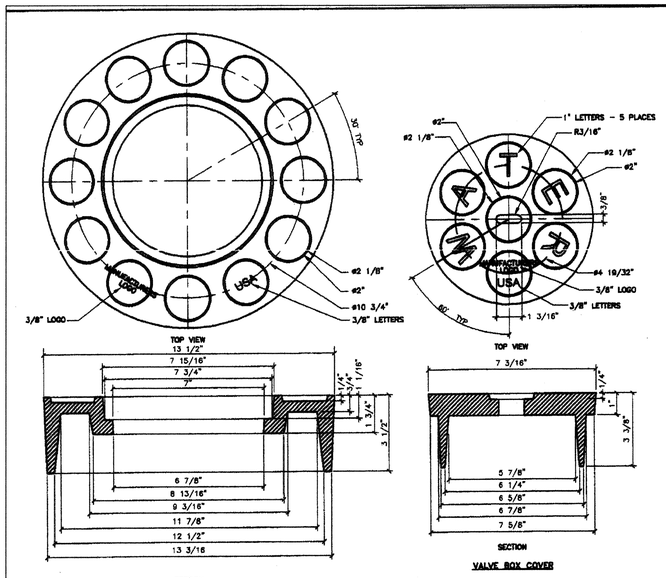

GENERAL NOTES - RING

1 ALBUQUERQUE VALVE BOX RING DESIGNED TO ACCEPT AN ALBUQUERQUE VALVE BOX COVER.

2 THE CASTING NUMBER, MANUFACTURER'S LOGO, DATE OF MANUFACTURE AND "USA" SHALL BE CAST IN A CONSPICUOUS LOCATION ON BOTH THE RING AND THE COVER.

3 FILLETS SHALL BE 1/4"R UNLESS OTHERWISE SPECIFIED.

4 A DRAFT ANGLE OF 3°-5° SHALL BE APPLIED UNLESS OTHERWISE SPECIFIED.

5 FINISH: REMOVE EXCESS IRON AND FINS.

6 THIS DETAIL DOES NOT APPLY FOR VALVE BOX RING AND COVER TO BE USED ON REUSE OR NON-POTABLE WATER SYSTEMS.

GENERAL NOTES - COVER

1 ALBUQUERQUE VALVE BOX COVER DESIGNED TO FIT INTO AN ALBUQUERQUE VALVE BOX RING.

2 THE CASTING NUMBER, MANUFACTURER'S LOGO, DATE OF MANUFACTURE AND "USA" SHALL BE CAST IN A CONSPICUOUS LOCATION ON BOTH THE RING AND THE COVER.

3 FILLETS SHALL BE 1/4"R UNLESS OTHERWISE SPECIFIED.

4 A DRAFT ANGLE OF 3°-5° SHALL BE APPLIED UNLESS OTHERWISE SPECIFIED.

5 FINISH: REMOVE EXCESS IRON AND FINS.

REVISIONS	CITY OF ALBUQUERQUE WATER RING AND COVER FOR VALVE BOX
	DWG. 2328 JANUARY 2002

NOTE: DETAILS 2326, 2328, 2362, AND 2380 ARE UNDER REVIEW AND IN DRAFT FORM UNTIL PUBLISHED IN THE NEXT EDITION OF C.O.A. STD. SPECS.

AS-BUILT INFORMATION

CONTRACTOR: Sierra Bros DATE 10/03
WORK STAKED BY: Sun-Tek DATE 9/04
INSPECTOR'S ACCEPTANCE BY: JM DATE 12/17/03
FIELD VERIFICATION BY: Sun-Tek DATE 9/04
DRAWINGS CORRECTED BY: Sun-Tek DATE 9/04

MICRO-FILM INFORMATION
RECORDED BY DATE
NO.

BENCH MARKS

SURVEY INFORMATION
FIELD NOTES

ENGINEER'S SEAL

CITY STANDARD DRAWINGS (DRAFT)

NO.	DATE	REMARKS	BY
		REVISIONS	

DESIGNED BY DATE
DRAWN BY DATE
CHECKED BY DATE

ISAACSON & ARFMAN, P.A.
Consulting Engineering Associates
128 Monroe Street N.E.
Albuquerque New Mexico
1276UTDTL.DWGanw 6/24/03

CITY OF ALBUQUERQUE
PUBLIC WORKS DEPARTMENT
ENGINEERING GROUP

TITLE: THE PRESERVE
UTILITY DETAILS

Design Review Committee	City Engineer Approval	Last Design Update	Mo./Day/Yr.	Mo./Day/Yr.

City Project No.	Zone Map No.	Sheet	Of
716181	E-12	6	8

SCANNED BY MESA REPRO

CONSTRUCTION TRAFFIC CONTROL GENERAL NOTES

1. CONTRACTOR MUST OBTAIN FROM CONSTRUCTION COORDINATION AN EXCAVATION/BARRICADING PERMIT BEFORE ENGAGING IN ANY CONSTRUCTION, MAINTENANCE OR REPAIR WORK IN ANY OF THE CITY OF ALBUQUERQUE'S RIGHTS-OF-WAY. EMERGENCY WORK THAT WOULD PRESERVE LIFE OR PROPERTY IS EXCLUDED WITH THE UNDERSTANDING, THAT A PERMIT SHALL BE OBTAINED WITHIN 24 TO 48 HOURS.

2. CONTRACTOR SHALL AT THE TIME OF PERMIT REQUEST, SUBMIT FOR APPROVAL BY CONSTRUCTION COORDINATION, A TRAFFIC CONTROL PLAN DETAILING ALL EXISTING TOPOGRAPHY SUCH AS LANE WIDTHS, DRIVEWAYS, AND BUSINESS/RESIDENTIAL ACCESSES. THE TRAFFIC CONTROL PLAN SHALL INCLUDE ALL PHASES OF WORK AND SCHEDULES INVOLVED IN THE CONSTRUCTION PROJECT. ANY SEPERATE PHASES OF A CONSTRUCTION PROJECT SHALL BE GIVEN AN INDIVIDUAL PERMIT EACH. BLANKET PERMITS WILL NOT BE ISSUED.

3. THESE TYPICAL TRAFFIC CONTROL PLANS DO NOT REFLECT THE EXISTING TOPOGRAPHY SUCH AS DRIVEWAYS, LANE WIDTHS, AND BUSINESS/RESIDENTIAL ACCESSES. EVERY LOCATION THAT REQUIRES CONSTRUCTION TRAFFIC CONTROL SHALL HAVE A DETAILED TRAFFIC CONTROL PLAN SHOWING ALL EXISTING TOPOGRAPHY.

4. CONSTRUCTION SHALL NOT BEGIN UNLESS A TRAFFIC CONTROL PLAN HAS BEEN APPROVED AND VERIFIED BY CONSTRUCTION COORDINATION.

5. CONSTRUCTION COORDINATION SHALL BE NOTIFIED 48 HOURS PRIOR TO ANY TRAFFIC CONTROL CHANGES NEEDED BY CONTRACTOR, THAT WERE NOT PREVIOUSLY APPROVED. THESE TRAFFIC CONTROL CHANGES SHALL BE REQUESTED IN WRITING ACCOMPANIED WITH A TRAFFIC CONTROL PLAN REFLECTING SUCH CHANGES.

6. ALL CONSTRUCTION TRAFFIC CONTROL DEVICES SHALL COMPLY TO THE MANUAL ON UNIFORM TRAFFIC CONTROL DEVICES (MUTCD), LATEST EDITION. IT IS THE RESPONSIBILITY OF THE CONTRACTOR TO INSTALL, SERVICE AND MAINTAIN ALL TRAFFIC CONTROL DEVICES. TRAFFIC CONTROL DEVICES SHALL NOT BE REMOVED OR ALTERED IN ANY WAY WITHOUT THE APPROVAL OF CONSTRUCTION COORDINATION, PER SECTION 6A-4 OF THE MUTCD, LATEST EDITION.

7. THE CONSTRUCTION TRAFFIC CONTROL INITIAL SET-UP SHALL BE BY AN AMERICAN TRAFFIC SAFETY SERVICES ASSOCIATION (ATSSA) CERTIFIED WORKSITE TRAFFIC SUPERVISOR. THE MAINTENANCE AND SERVICING SHALL ALSO BE DONE BY AN ATSSA CERTIFIED WORKSITE TRAFFIC SUPERVISOR OR EQUIVALENT.

8. CONTRACTOR IS RESPONSIBLE TO MAINTAIN AND SERVICE ALL TRAFFIC CONTROL DEVICES 24 HOURS A DAY, 7 DAYS A WEEK THROUGHOUT LENGTH OF PROJECT. CONTRACTOR IS RESPONSIBLE THAT ALL TRAFFIC CONTROL DEVICES COMPLY WITH THE MUTCD, LATEST EDITION.

9. ALL ADVANCE WARNING SIGNS SHALL BE DOUBLE INDICATED WHENEVER THERE ARE MULTI-LANE TRAFFIC IN ANY ONE GIVEN DIRECTION AND THERE IS SUFFICIENT MEDIAN SPACE.

10. ALL BARRICADES IN ALL TAPERS AND TANGENTS SHALL BE PLACED APART, A DISTANCE MEASURED IN FEET, EQUAL TO THAT OF THE POSTED SPEED LIMIT. NO EXCEPTIONS UNLESS APPROVED BY CONSTRUCTION COORDINATION PER MUTCD SECTION 6A-4.

△1 11. ALL WORK IN ARTERIAL ROADWAYS SHALL BE ON A CONTINUOUS 24 HOUR PER DAY BASIS UNTIL COMPLETED.

12. CONTRACTOR IS RESPONSIBLE TO PROVIDE CONSTRUCTION COORDINATION, A WEEKLY LOG OF DAILY INSPECTIONS OF BARRICADE AND MAINTENANCE SCHEDULES ON PROJECTS THAT ARE OVER ONE WEEK DURATION.

13. EQUIPMENT OR MATERIALS SHALL NOT BE STORED WITHIN 15 FEET OF A TRAVELED TRAFFIC LANE DURING NON-WORKING HOURS WITHOUT THE APPROVAL OF CONSTRUCTION COORDINATION.

14. CONTRACTOR SHALL PROVIDE AND MAINTAIN A SAFE AND ADEQUATE MEANS OF CHANNELIZING PEDESTRIAN TRAFFIC AROUND AND THROUGH THE CONSTRUCTION AREA.

15. CONTRACTOR IS RESPONSIBLE FOR OBLITERATION OF ANY CONFLICTING STRIPING AND RESPONSIBLE FOR ALL TEMPORARY STRIPING.

16. CONTRACTOR SHALL MAINTAIN ACCESS TO ALL FACILITIES, BUSINESSES AND/OR RESIDENTS AT ALL TIMES.

17. CONTRACTOR SHALL PROVIDE ACCESS SIGNS FOR BUSINESSES LOCATED WITHIN THE CONSTRUCTION AREA UNDER THE SUPERVISION OF CONSTRUCTION COORDINATION. EACH ACCESS SIGN SHALL HAVE 5 INCH, WHITE OPAQUE LETTERING ON BLUE REFLECTORIZED BACKGROUND. ACCESS SIGNS SHALL BE CONSIDERED INCIDENTAL TO THE BID AND NOT PART OF THE CONTRACT UNLESS OTHERWISE STATED. NO MORE THAN 3 BUSINESSES SHALL BE LISTED ON A ACCESS SIGN. SHOPPING CENTERS AND MALLS SHALL BE LISTED AS SUCH.

18. ALL ADVANCE WARNING SIGNS SHALL MEET THE MINIMUM REFLECTIVE INTENSITY REQUIREMENTS SET FORTH BY THE CITY OF ALBUQUERQUE. CONSTRUCTION COORDINATION SHALL DETERMINE ALL REQUIREMENTS AND APPROVE OR DISAPPROVE ANY ADVANCE WARNING SIGN PER SECTION 6A-4 OF THE MUTCD, LATEST EDITION.

△2 19. 48 HOURS PRIOR TO OCCUPYING OR CLOSING OF A RIGHT-OF-WAY, CONTRACTOR SHALL NOTIFY: POLICE, FIRE DEPARTMENT, SCHOOLS, HOSPITALS, TRANSIT AUTHORITY, BUSINESSES AND/OR RESIDENTS THAT WILL BE AFFECTED BY THE CONSTRUCTION.

20. ANY FIELD ADJUSTMENTS SHALL BE APPROVED BY CONSTRUCTION COORDINATION.

21. EXCAVATIONS SHALL BE PLATED, TEMPORARILY PATCHED OR RESURFACED PRIOR TO OPENING OF TRAFFIC. A MINIMUM OF 11 FEET SHALL BE PROVIDED FOR TRAFFIC IN ANY GIVEN DIRECTION. CONTRACTOR IS RESPONSIBLE FOR ANY WORK INVOLVED IN SATISFYING THESE REQUIREMENTS.

22. CONTRACTOR SHALL AT ALL TIMES COMPLY WITH THE FOLLOWING:
    1. STANDARDS AND REQUIREMENTS SET FORTH IN THE MANUAL ON UNIFORM TRAFFIC CONTROL DEVICES, LATEST EDITION.
    2. THE CITY OF ALBUQUERQUE TRAFFIC CODE, LATEST EDITION.
    3. SECTION 19 OF THE CITY OF ALBUQUERQUE'S STANDARD SPECIFICATIONS FOR PUBLIC WORK CONSTRUCTION, AS WELL AS OTHER SECTIONS.

23. FAILURE TO COMPLY WITH ANY OF THE ABOVE MENTIONED, WILL BE ADEQUATE CAUSE TO CEASE ALL WORK ON ANY CONSTRUCTION PROJECT. WORK WILL NOT RESUME UNTIL ALL REQUIREMENTS ARE ADDRESSED AND APPROVED BY CONSTRUCTION COORDINATION.

24. ALL TRAFFIC CONTROL DEVICES SHALL BE KEPT IN NEW-CLEAN CONDITION, WASHING OF EQUIPMENT IS INCIDENTAL TO IT'S PLACEMENT AND MAINTENANCE.

25. TRAFFIC CONTROL STANDARDS APPLY ONLY WHERE THE CONSTRUCTION TRAFFIC CONTROL PLANS ARE NOT SPECIFIC.

△3 26. ADVANCE WARNING SIGNS SHALL BE 36"x36" MIN. WITH SUPER ENGINEERING GRADE SHEETING OR BETTER. MOUNTING HEIGHT AT TOP OF SIGN SHALL BE THE SAME AS FOR A 48" SIGN AS INDICATED IN THE M.U.T.C.D.

△4 27. CONTRACTOR SHALL MAINTAIN A GRAFFITI-FREE WORKSITE. ALL GRAFFITI SHALL BE PROMPTLY REMOVED FROM ALL EQUIPTMENT, BOTH PERMANENT AND TEMPORARY.

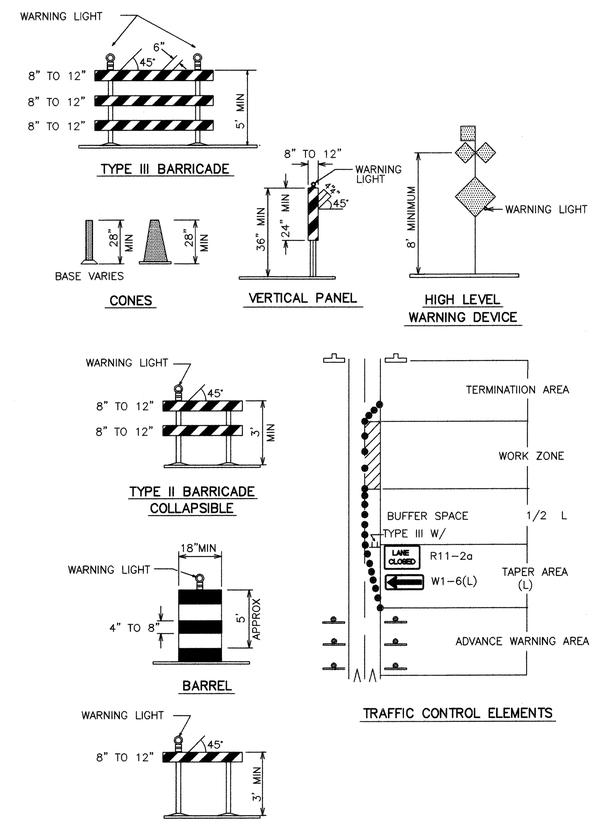

LEGEND

- WORK AREA
- BARRICADE – TYPE I, TYPE II, OR BARREL
- BARRICADE – TYPE III
- VERTICAL PANEL
- WARNING SIGN
- D — DISTANCE BETWEEN SIGNS – A DISTANCE MEASURED IN FEET EQUAL TO A VALUE OF TEN TIMES THE SPEED LIMIT OF THE STREET
- FLAGMAN POSITION
- S — SPACING BETWEEN BARRICADES – A DISTANCE MEASURED IN FEET EQUAL TO THE SPEED LIMIT OF THE STREET
- L — TAPER LENGTH – SEE CHART BELOW

THE TANGENT LENGTH IS EQUAL TO THE TAPER LENGTH FOR A GIVEN STREET.

TAPER REQUIREMENT

SPEED LIMIT (MPH)	TAPER LENGTH(L) (FEET)			MINIMUM NUMBER OF DEVICES FOR TAPER	MAXIMUM DEVICE SPACING IN FEET	
	10' LANE	11' LANE	12' LANE		ALONG TAPER	AFTER TAPER
20	70	75	80	5	20	20
25	105	115	125	6	25	25
30	150	165	180	7	30	30
35	205	225	245	8	35	35
40	270	295	320	9	40	40
45	450	495	540	13	45	45
50	500	550	600	13	50	50
55	550	605	660	13	55	55

RECOMMENDED SIGN SPACING(D) FOR ADVANCE WARNING SIGN SERIES

SPEED MILES PER HOUR	MINIMUM DISTANCE IN FEET BETWEEN SIGNS	FROM LAST SIGN TO TAPER
0-20	10 X SPEED LIMIT	10 X SPEED LIMIT
25-30	10 X SPEED LIMIT	10 X SPEED LIMIT
30-35	10 X SPEED LIMIT	10 X SPEED LIMIT
40-45	10 X SPEED LIMIT	10 X SPEED LIMIT
50-60	10 X SPEED LIMIT	10 X SPEED LIMIT

TAPER CRITERIA

TYPE OF TAPER	TAPER LENGTH
UPSTREAM TAPER:	
MERGING TAPER	L MINIMUM
SHIFTING TAPER	1/2 L MINIMUM
SHOULDER TAPER	1/2 L MINIMUM
TWO-WAY TRAFFIC TAPER	100 FEET MAXIMUM
DOWNSTREAM TAPERS	100 FEET PER LANE

TAPER LENGTH COMPUTATION

SPEED LIMIT	
40 MPH OR LESS	$L = \frac{WS^2}{60}$
40 MPH OR GREATER	$L = W \times S$

L = TAPER LENGTH
W = WIDTH OF OFFSET IN FEET
S = POSTED SPEED OR OFF-PEAK 85-PERCENTILE SPEED IN MPH

SIGN FACE DETAILS

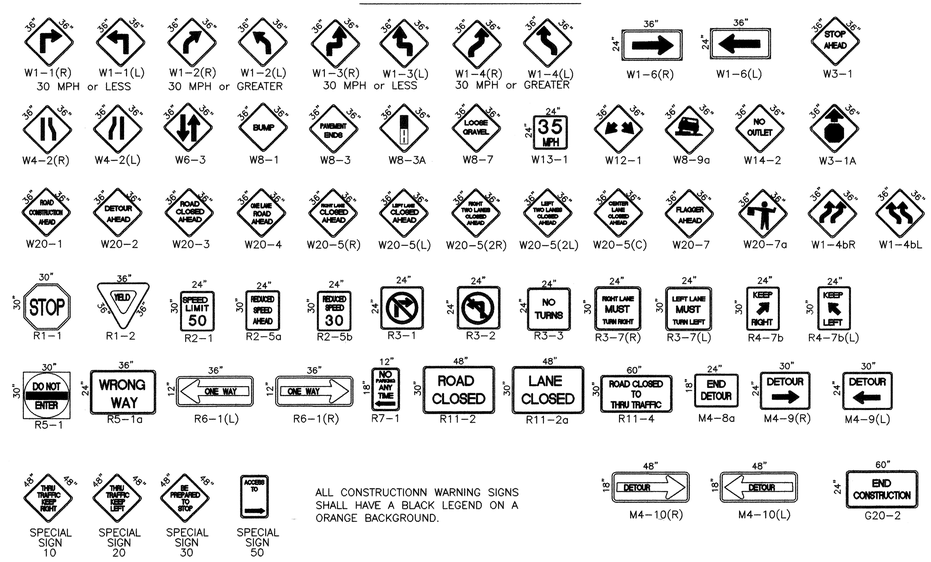

ALL CONSTRUCTIONN WARNING SIGNS SHALL HAVE A BLACK LEGEND ON A ORANGE BACKGROUND.

AS-BUILT INFORMATION
CONTRACTOR
WORK STAKED BY — DATE
INSPECTOR'S ACCEPTANCE BY — DATE
FIELD VERIFICATION BY — DATE
DRAWINGS CORRECTED BY — DATE
MICRO-FILM INFORMATION
RECORDED BY — DATE
NO.

BENCH MARKS

SURVEY INFORMATION
FIELD NOTES

ENGINEER'S SEAL

CITY STANDARD DRAWING

NO.	DATE	REMARKS	BY
		REVISIONS	

DESIGN
DESIGNED BY — DATE
DRAWN BY — DATE
CHECKED BY — DATE

ISAACSON & ARFMAN, P.A.
Consulting Engineering Associates
128 Monroe Street N.E.
Albuquerque New Mexico
1276TRF1.DWGanw 6/24/03

CITY OF ALBUQUERQUE
PUBLIC WORKS DEPARTMENT
ENGINEERING GROUP

TITLE: THE PRESERVE
TRAFFIC CONTROL
SIGNING & CONSTRUCTION TRAFFIC CONTROL STANDARDS

Design Review Committee | City Engineer Approval | Last Design Update | Mo./Day/Yr. | Mo./Day/Yr.

City Project No. 716181 | Zone Map No. E-12 | Sheet 7 Of 8

SCANNED BY MESA REPRO

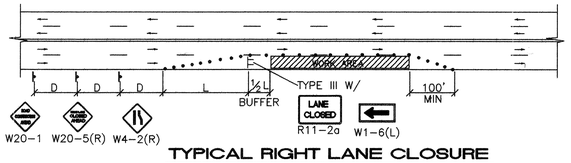

TYPICAL RIGHT LANE CLOSURE

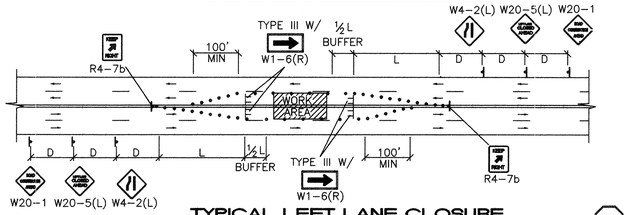

TYPICAL LEFT LANE CLOSURE

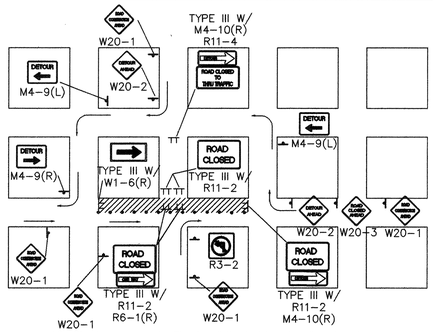

TYPICAL ONE DIRECTION DETOUR

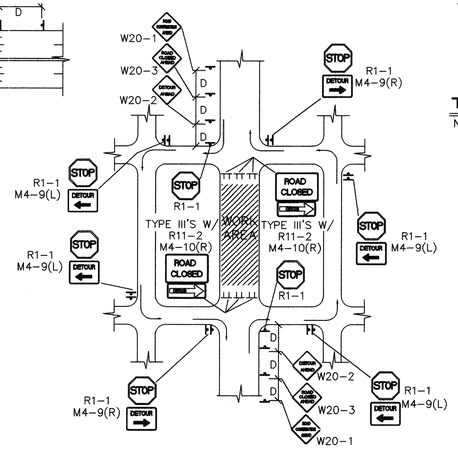

TYPICAL STREET CLOSURE

NOTE: (R1-1) BASED ON FIELD CONDITIONS.

NOTE:
MAY REQUIRE LEFT LANE CLOSURE DEPENDING ON FIELD CONDITIONS.

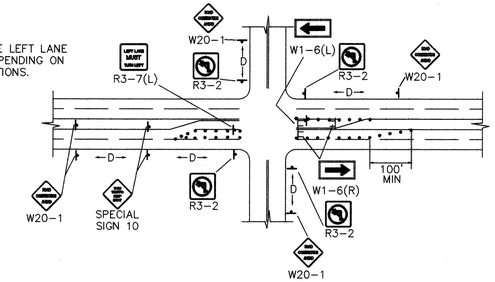

TYPICAL LANE CLOSURE AT INTERSECTION

NOTE: DEPENDING ON WORK ZONE LOCATION.

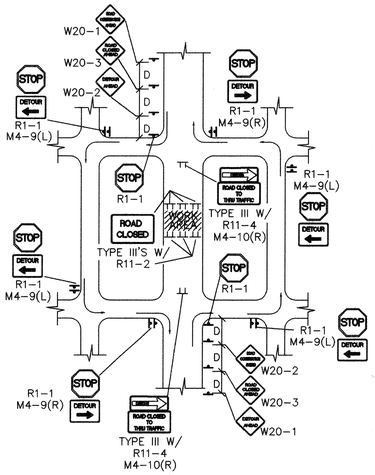

TYPICAL MID-BLOCK CLOSURE

NOTE: (R1-1) BASED ON FIELD CONDITIONS.

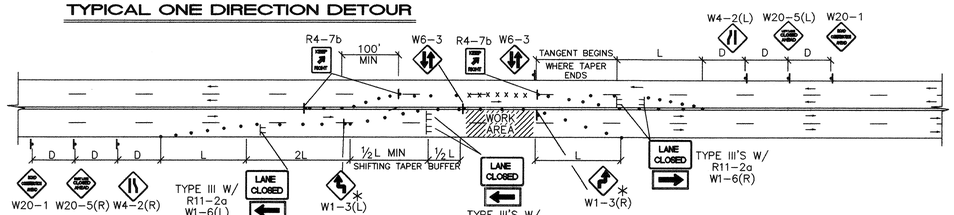

TYPICAL TRAFFIC SPLIT-(PAINTED MEDIAN)

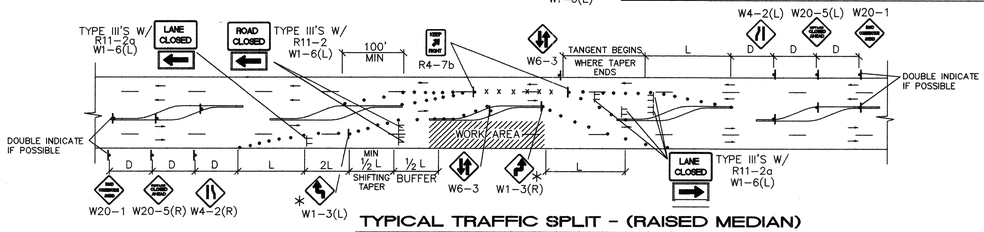

TYPICAL TRAFFIC SPLIT - (RAISED MEDIAN)

TRAFFIC SPLIT NOTES:

1. THE OFFSET DISTANCE MUST BE CALCULATED IN ALL SHIFTING TAPERS. THE OFFSET DISTANCES SHALL INCLUDE LANE WIDTHS PLUS MEDIAN WIDTHS.
2. 1/2 L IS THE MINIMUM DISTANCE FOR SHIFTING TAPERS.
3. REVERSE CURVES MAY BE IMPLEMENTED. ALL CURVE DATA SHALL BE CALCULATED.
4. MEDIAN REMOVAL SHALL BE REQUIRED IF 1/2 L OR REVERSE CURVE IS NOT SUFFICIENT. MEDIAN REMOVAL SHALL TAKE PLACE BEFORE SPLITS.
5. REDUCED SPEED MAY BE CONSIDERED.
6. * USE W1-3 FOR 30 MPH OR LESS, W1-4 FOR SPEED 35 MPH OR GREATER.

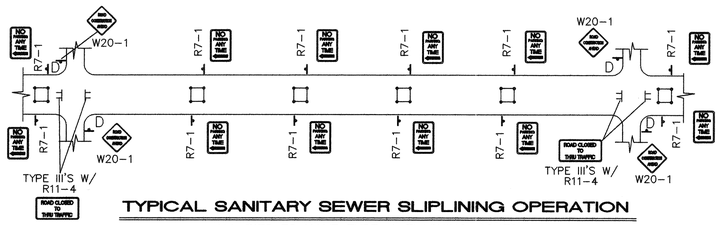

TYPICAL SANITARY SEWER SLIPLINING OPERATION

- ALL PITS TO HAVE TYPE-A FLASHING LIGHTS
- ALL PITS TO HAVE FLAGLINE

GENERAL NOTE:

ALL CONSTRUCTION WARNING SIGNS SHALL HAVE A BLACK LEGEND ON AN ORANGE BACKGROUND.

⚠ ALL ADVANCE WARNING SIGNS SHALL BE A MINIMUM OF 36" THIRTY SIX INCHES BY 36" THIRTY SIX INCHES IN SIZE AND SHALL HAVE ONE WARNING LIGHT.

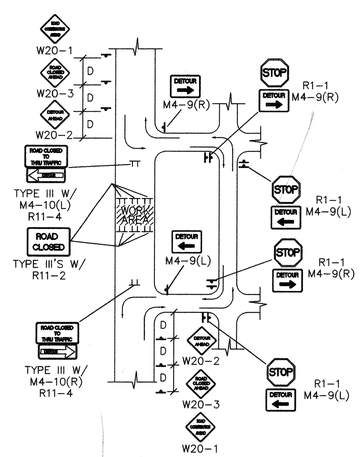

TYPICAL STREET CLOSURE

NOTE: (R1-1) BASED ON FIELD CONDITIONS.

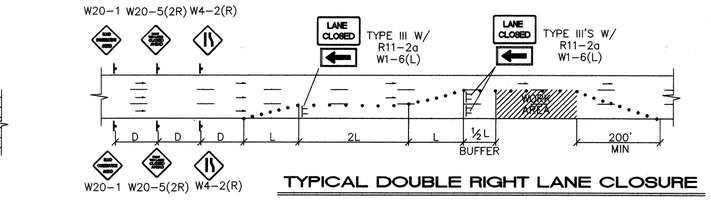

TYPICAL DOUBLE RIGHT LANE CLOSURE

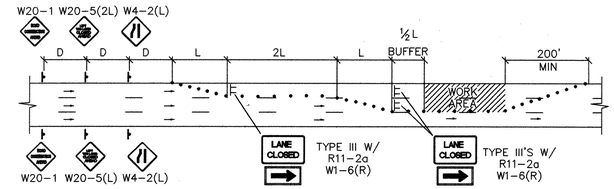

TYPICAL DOUBLE LEFT LANE CLOSURE

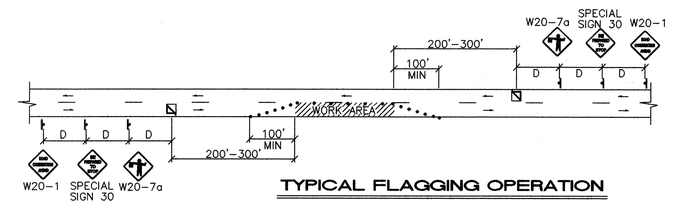

TYPICAL FLAGGING OPERATION

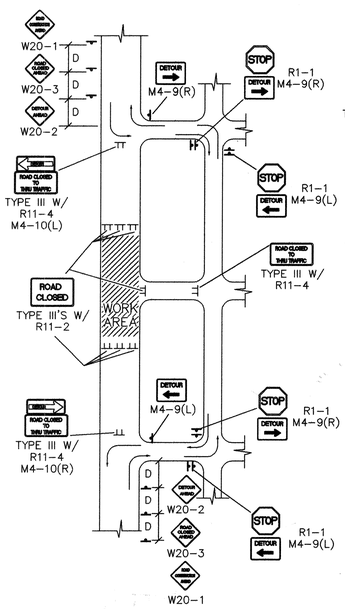

TYPICAL STREET CLOSURE

NOTE: (R1-1) BASED ON FIELD CONDITIONS.

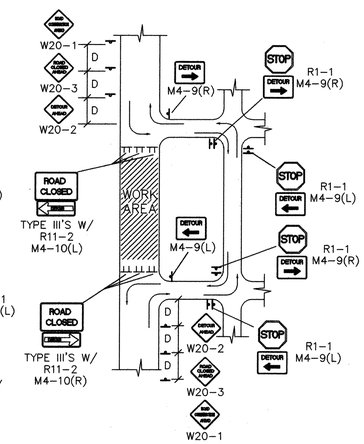

TYPICAL STREET CLOSURE

NOTE: (R1-1) BASED ON FIELD CONDITIONS.

AS-BUILT INFORMATION

CONTRACTOR		
WORK STAKED BY		DATE
INSPECTED BY		DATE
ACCEPTANCE BY		DATE
FIELD VERIFICATION BY		DATE
DRAWINGS CORRECTED BY		DATE

MICRO-FILM INFORMATION

RECORDED BY	DATE
NO.	

BENCH MARKS

SURVEY INFORMATION

FIELD NOTES

ENGINEER'S SEAL

CITY STANDARD DRAWING

NO.	DATE	REMARKS	BY
		REVISIONS	
		DESIGN	

DESIGNED BY DATE
DRAWN BY DATE
CHECKED BY DATE

ISAACSON & ARFMAN, P.A.
Consulting Engineering Associates
128 Monroe Street N.E.
Albuquerque New Mexico
12761RF2.DWGanw 6/24/03

CITY OF ALBUQUERQUE
PUBLIC WORKS DEPARTMENT
ENGINEERING GROUP

TITLE: THE PRESERVE
TRAFFIC CONTROL
TRAFFIC CONTROL & SIGNING EXAMPLES

Design Review Committee	City Engineer Approval	Last Design Update	Mo./Day/Yr.	Mo./Day/Yr.

City Project No.	Zone Map No.	Sheet	Of
716181	E-12	8	8

SCANNED BY MESA REPRO

26-71 CT. 111-2003

SCANNED BY PLANNING

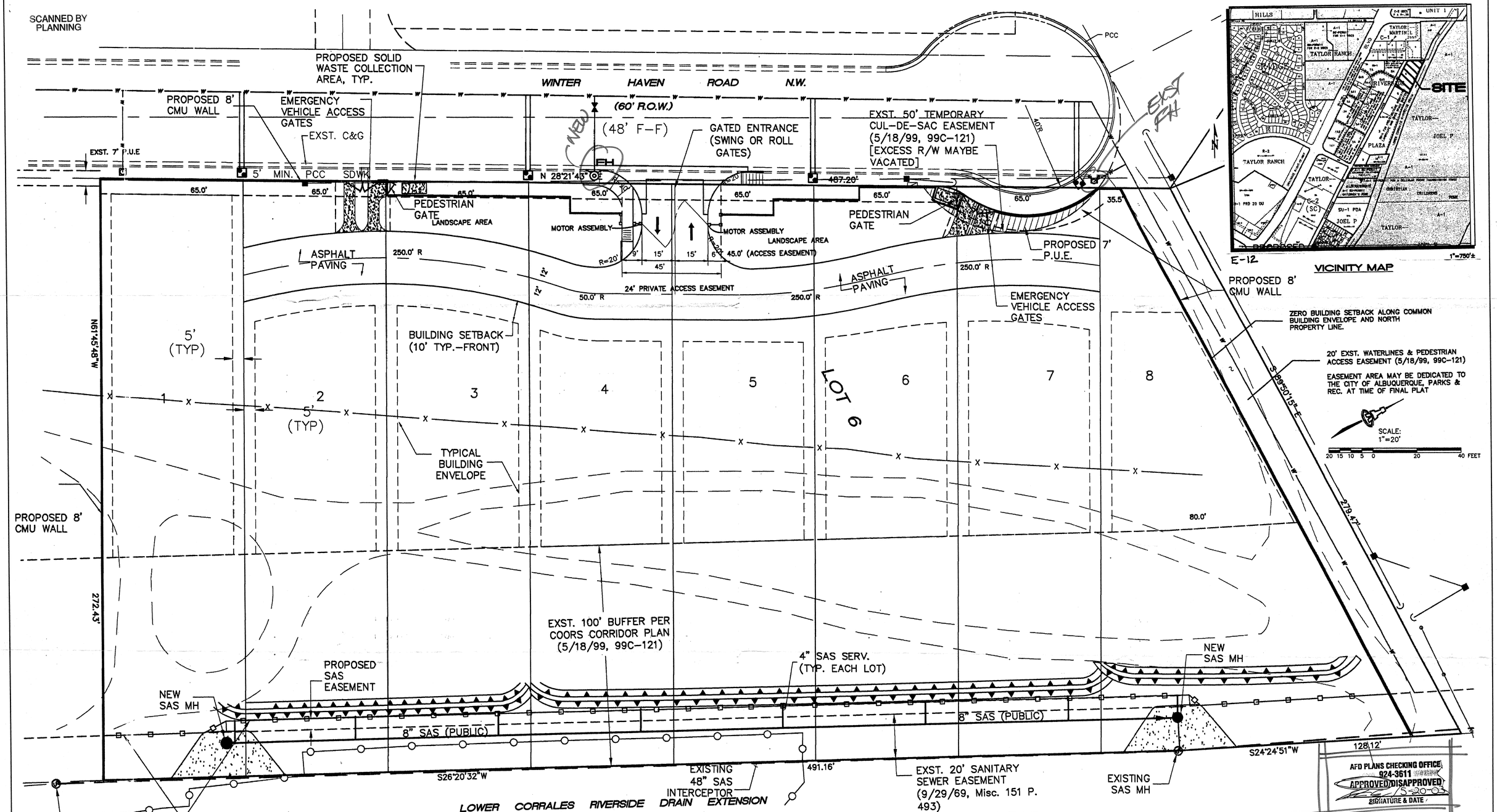

AFD PLANS CHECKING OFFICE 924-3611
APPROVED DISAPPROVED
5-20-03
SIGNATURE & DATE

NOTES:

1. EACH LOT SHALL ACCOMMODATE SINGLE-FAMILY RESIDANCE.
2. DRIVEWAY SHALL NOT BE LESS THAN 20 FT. LONG.

PROJECT NUMBER: .

APPLICATION NUMBER: .

This plan is consistent with the specific Site Development Plan approved by the Environmental Planning Commission (EPC, dated _____ and the Findings and Conditions in the Official Notification of Decision are satisfied.

DRB SITE DEVELOPMENT PLAN APPROVAL:

Traffic Engineer, Transportation Division	Date
Utilities Development	Date
Parks and Recreation Department	Date
City Engineer	Date
Solid Waste Management	Date
DRB Chairperson, Planning Department	Date

LEGEND

- GRAVEL EMERGENCY ACCESS
- BUILDING ENVELOPE
- SINGLE WATER METER & BOX
- DOUBLE WATER METER & BOX
- GATE VALVE W/ TYPE 'A' VALVE BOX
- FIRE HYDRANT
- SAS MANHOLE
- WATER LINE W/ FITTING

THE PRESERVE

LOT 6, RIVERSIDE PLAZA

SITE PLAN

ISAACSON & ARFMAN, P.A.
Consulting Engineering Associates
128 Monroe Street N.E.
Albuquerque New Mexico

1276SDP.DWG/ts | 05/19/03

CPN# 716181

SHEET 1 OF 1