CONSTRUCTION PLANS
FOR
GIBSON BLVD. IMPROVEMENTS
ALBUQUERQUE, NEW MEXICO

INDEX

PAVING PLANS

UTILITY PLANS

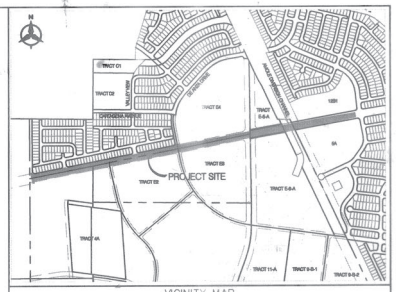

VICINITY MAP
M-9, N-9

NOTICE TO CONTRACTORS

1. AN EXCAVATION/CONSTRUCTION PERMIT WILL BE REQUIRED BEFORE BEGINNING ANY WORK WITHIN THE CITY RIGHT-OF-WAY.

2. ALL WORK DETAILED ON THESE PLANS TO BE PERFORMED UNDER CONTRACT SHALL, EXCEPT AS OTHERWISE STATED OR PROVIDED FOR HEREON, BE CONSTRUCTED IN ACCORDANCE WITH THE CITY OF ALBUQUERQUE STANDARD SPECIFICATIONS FOR PUBLIC WORKS CONSTRUCTION, 1986 EDITION AS REVISED THROUGH UPDATE #7.

3. TWO WORKING DAYS PRIOR TO ANY EXCAVATION, THE CONTRACTOR MUST CONTACT NEW MEXICO ONE CALL SYSTEM (260-1990) FOR LOCATION OF EXISTING UTILITIES.

4. PRIOR TO CONSTRUCTION, THE CONTRACTOR SHALL EXCAVATE AND VERIFY THE HORIZONTAL AND VERTICAL LOCATIONS OF ALL OBSTRUCTIONS, SHOULD A CONFLICT EXIST, THE CONTRACTOR SHALL NOTIFY THE ENGINEER IMMEDIATELY SO THAT THE CONFLICT CAN BE RESOLVED WITH A MINIMUM AMOUNT OF DELAY.

5. FIVE (5) WORKING DAYS PRIOR TO BEGINNING CONSTRUCTION, THE CONTRACTOR SHALL SUBMIT TO CONSTRUCTION COORDINATION DIVISION A DETAILED CONSTRUCTION SCHEDULED. TWO (2) WORKING DAYS PRIOR TO THE START OF CONSTRUCTION, THE CONTRACTOR SHALL OBTAIN A BARRICADING PERMIT FROM THE CONSTRUCTION COORDINATION DIVISION, CONTRACTOR SHALL NOTIFY THE CONSTRUCTION COORDINATION ENGINEER (924-3400) PRIOR TO OCCUPYING AN INTERSECTION. REFER TO SECTION 19 OF THE GENERAL CONDITIONS OF THE STANDARD SPECIFICATIONS.

6. ALL WORK EFFECTING ARTERIAL ROADWAYS REQUIRES TWENTY-FOUR HOUR CONSTRUCTION.

7. ALL STREET STRIPING ALTERED OR DESTROYED SHALL BE REPLACED WITH PLASTIC REFLECTORIZED PAVEMENT MARKING BY CONTRACTOR TO THE SAME LOCATION AS WAS EXISTING, OR AS INDICATED BY THIS PLAN SET.

8. CONTRACTOR SHALL NOTIFY THE ENGINEER NOT LESS THAN SEVEN (7) DAYS PRIOR TO STARTING WORK IN ORDER THAT THE CITY SURVEYOR MAY TAKE NECESSARY MEASURES TO INSURE THE PRESERVATION OF SURVEY MONUMENTS. CONTRACTOR SHALL NOT DISTURB PERMANENT SURVEY MONUMENTS WITHOUT THE CONSENT OF THE CITY SURVEYOR AND SHALL NOTIFY THE CITY SURVEYOR AND BEAR THE EXPENSE OF REPLACING ANY THAT MAY BE DISTURBED WITHOUT PERMISSION. REPLACEMENT SHALL BE DONE ONLY BY THE CITY SURVEYOR. WHEN A CHANGE IS MADE IN THE FINISHED ELEVATIONS OF THE PAVEMENT OF ANY ROADWAY IN WHICH A PERMANENT SURVEY MONUMENT IS LOCATED, CONTRACTOR SHALL, AT HIS OWN EXPENSE, ADJUST THE MONUMENT COVER TO THE NEW GRADE UNLESS OTHERWISE SPECIFIED. REFER TO SECTION 4.4 OF THE GENERAL CONDITIONS OF THE STANDARD SPECIFICATIONS.

9. CONTRACTOR SHALL RECORD DATA ON ALL UTILITY LINES AND ACCESSORIES AS REQUIRED BY THE CITY OF ALBUQUERQUE FOR THE PREPARATION OF "AS CONSTRUCTED" DRAWINGS. CONTRACTOR SHALL NOT COVER UTILITY LINES AND ACCESSORIES UNTIL ALL DATA HAS BEEN RECORDED.

10. CONTRACTOR SHALL MAINTAIN A GRAFFITI-FREE WORK SITE. CONTRACTOR SHALL PROMPTLY REMOVE ANY GRAFFITI FROM ALL EQUIPMENT, WHETHER PERMANENT OR TEMPORARY.

11. CONTRACTOR SHALL COORDINATE WITH THE CITY OF ALBUQUERQUE WATER UTILITY DIVISION (857-8200) SEVEN (7) WORKING DAYS IN ADVANCE OF ANY WORK THAT MAY AFFECT EXISTING PUBLIC WATER OR SEWER UTILITIES. EXISTING VALVES TO BE OPERATED BY CITY PERSONNEL ONLY. CONTRACTOR SHALL CONTACT THE WATER SYSTEMS DIVISION SEVEN (7) WORKING DAYS PRIOR TO NEEDING VALVES TURNED ON OR OFF.

THE FOLLOWING NOTES ALSO APPLY WHEN CHECKED

ALL UTILITIES AND UTILITY SERVICE LINES SHALL BE INSTALLED PRIOR TO PAVING.

BACKFILL COMPACTION SHALL BE ACCORDING TO SPECIFIED STREET USE.

[X] SIDEWALKS AND WHEELCHAIR RAMPS WITHIN THE CURB RETURNS SHALL BE CONSTRUCTED WHEREVER A NEW CURB RETURN IS CONSTRUCTED.

[X] IF CURB IS DEPRESSED FOR A DRIVEPAD, THE DRIVEPAD SHALL BE CONSTRUCTED PRIOR TO ACCEPTANCE OF CURB AND GUTTER.

[X] ALL STORM DRAINAGE FACILITIES SHALL BE COMPLETED PRIOR TO FINAL ACCEPTANCE.

[X] THE REQUESTOR OR DEVELOPER SHALL BE RESPONSIBLE FOR REPAIR OR REPLACEMENT OF ALL CURB AND GUTTER OR SIDEWALK DAMAGED AFTER APPROVAL BY THE CITY ENGINEER OF WORK COMPLETED BY THE CONTRACTOR.

CONSTRUCTION NOTES:

1. THE CONTRACTOR SHALL ABIDE BY ALL LOCAL, STATE, AND FEDERAL LAWS, RULES AND REGULATIONS WHICH APPLY TO THE CONSTRUCTION OF THESE IMPROVEMENTS.

2. PRIOR TO CONSTRUCTION, CONTRACTOR SHALL EXCAVATE AND VERIFY THE HORIZONTAL AND VERTICAL LOCATIONS OF ALL POTENTIAL OBSTRUCTIONS. SHOULD A CONFLICT EXIST, THE CONTRACTOR SHALL NOTIFY THE ENGINEER OR CONSTRUCTION OBSERVER SO THAT THE CONFLICT CAN BE RESOLVED WITH A MINIMUM AMOUNT OF DELAY.

3. ALL ELECTRICAL, TELEPHONE, CABLE TV, GAS AND OTHER UTILITY LINES, CABLES AND APPURTENANCES ENCOUNTERED DURING CONSTRUCTION THAT REQUIRE RELOCATION, SHALL BE COORDINATED WITH THAT UTILITY. THE CONTRACTOR SHALL BE RESPONSIBLE FOR COORDINATION OF ALL NECESSARY UTILITY ADJUSTMENTS. NO ADDITIONAL COMPENSATION WILL BE ALLOWED FOR DELAYS OR INCONVENIENCES CAUSED BY UTILITY COMPANY WORK CREWS. THE CONTRACTOR MAY BE REQUIRED TO RESCHEDULE HIS ACTIVITIES TO ALLOW UTILITY CREWS TO PERFORM THEIR REQUIRED WORK.

4. DISPOSAL SITE FOR ALL EXCESS EXCAVATION MATERIAL, AND UNSUITABLE MATERIAL SHALL BE OBTAINED BY THE CONTRACTOR IN COMPLIANCE WITH APPLICABLE ENVIRONMENTAL REGULATIONS AND APPROVED BY THE CONSTRUCTION OBSERVER. ALL COSTS INCURRED IN OBTAINING A DISPOSAL SITE AND HAUL THERETO SHALL BE CONSIDERED INCIDENTAL TO THE PROJECT AND NO SEPARATE MEASUREMENT OR PAYMENT SHALL BE MADE.

5. THE CONTRACTOR IS RESPONSIBLE FOR PROTECTING THE EXISTING UTILITY LINES WITHIN THE CONSTRUCTION AREA. ANY DAMAGE TO EXISTING FACILITIES CAUSED BY CONSTRUCTION ACTIVITY SHALL BE REPAIRED OR REPLACED AT THE CONTRACTOR'S EXPENSE AND APPROVED BY THE CONSTRUCTION OBSERVER

6. CONSTRUCTION ACTIVITY SHALL BE LIMITED TO THE PROPERTY AND/OR PROJECT LIMITS. ANY DAMAGE TO ADJACENT PROPERTIES RESULTING FROM THE CONSTRUCTION PROCESS IS THE RESPONSIBILITY OF THE CONTRACTOR. ANY COSTS INCURRED FOR REPAIRS SHALL BE THE COST OF THE CONTRACTOR

7. OVERNIGHT PARKING OF CONSTRUCTION EQUIPMENT SHALL NOT OBSTRUCT DRIVEWAYS OR DESIGNATED TRAFFIC LANES. THE CONTRACTOR SHALL NOT STORE ANY EQUIPMENT OR MATERIAL WITHIN THE PUBLIC RIGHT-OF-WAY.

8. THE CONTRACTOR SHALL OBTAIN ALL THE NECESSARY PERMITS FOR THE PROJECT PRIOR TO COMMENCING CONSTRUCTION (I.E. BARRICADING, SURFACE DISTURBANCE)

9. THE CONTRACTOR SHALL BE RESPONSIBLE TO REPLACE AT HIS EXPENSE ANY AND ALL PROPERTY CORNERS DESTROYED DURING CONSTRUCTION. ALL PROPERTY CORNERS MUST BE RESET BY A REGISTERED LAND SURVEYOR.

10. ALL PERMANENT PAVEMENT MARKING AND TRAFFIC SIGNING SHALL BE FURNISHED BY THE CONTRACTOR PER PLAN.

11. THE CONTRACTOR SHALL FOLLOW THE CONSTRUCTION TRAFFIC CONTROL ALBUQUERQUE, TND SIGNING PLAN PROVIED HEREON. THE CONTRACTOR SHALL COORDINATE WITH THE CITY OF TRAFFIC ENGINEERING DEPARTMENT, PRIOR TO BEGINNING ANY CONSTRUCTION WORK ON OR ADJACENT TO EXISTING STREETS.

12. ALL BARRICADES AND CONSTRUCTION SIGNING SHALL CONFORM TO APPLICABLE SECTIONS OF THE "MANUAL OF UNIFORM TRAFFIC CONTROL DEVICES" (MUTCD), U.S. DEPARTMENT OF TRANSPORTATION, LATEST EDITION.

13. THE CONTRACTOR SHALL MAINTAIN ALL CONSTRUCTION BARRICADES AND SIGNING AT ALL TIMES. THE CONTRACTOR SHALL VERIFY THE PROPER LOCATION OF ALL BARRICADING AT THE END AND BEGINNING OF EACH DAY.

14. ALL SAWCUT PAVEMENT SHALL HAVE A UNIFORM EDGE AND BE SPRAYED WITH TACK.

15. WHEN ABUTTING NEW CURB AND GUTTER TO EXISTING PAVEMENT, A 1' WIDE SECTION OF EXISTING PAVEMENT ADJACENT TO THE CURB AND GUTTER SHALL BE SAWCUT, REMOVED, AND REPLACED AS PER THE STANDARD SPECIFICATIONS.

16. THE CONTRACTOR SHALL ASSUME RESPONSIBILITY FOR ANY DAMAGE TO EXISTING PAVEMENTS, PAVEMENT MARKINGS, CURB & GUTTER, DRIVE PADS, WHEELCHAIR RAMPS, AND SIDEWALK DURING CONSTRUCTION, APART FROM THOSE SECTIONS INDICATED FOR REMOVAL ON THE PLANS AND SHALL REPAIR OR REPLACE PER COA STANDARDS, AT HIS OWN EXPENSE.

17. FOR STORM DRAIN CONSTRUCTION, RCP PIPE JOINTS SHALL NOT BE GROUTED PRIOR TO FINAL INSPECTION. FINAL INSPECTION WILL DETERMINE JOINTS TO BE GROUTED FOR FINAL ACCEPTANCE OF THE CONSTRUCTION.

18. ALL EXCAVATION, TRENCHING, AND SHORING ACTIVITIES MUST BE CARRIED-OUT IN ACCORDANCE WITH OSHA 29 CFR 1926.650 SUBPART P.

CERTIFICATE OF SUBSTANTIAL COMPLIANCE ON PLANS

I, Kyle Choate PE of the firm of QUICKDRAW ENGINEERING a Registered Professional Engineer in the State of New Mexico, do hereby certify, to the best of my knowledge and belief, that the infrastructure installed as part of this project has been inspected by me or by a qualified person under my direct supervision and has been constructed in accordance with the plans and specifications approved by the City Engineer and that the original design intent of the approved plans has been met, except as noted by me on the as-built construction drawings. This certification is based on site inspections by me or personnel under my direction and survey information provided by JIM ALDRICH NMPS number 7719.

LYNN RICHARD BERLAND NEW MEXICO 14925 PROFESSIONAL ENGINEER

APPROVED AS RECORD DRAWINGS
DESIGN REVIEW SECTION
CITY CONSTRUCTION ENGINEER
DATE: 2/8/05

SURVEYOR'S CERTIFICATION

"I, Timothy Aldrich, a duly qualified Registered Professional Land Surveyor under the laws of the State of New Mexico, do hereby certify that the 'as-built' information shown on these drawings was obtained from field construction and 'as-built' surveys performed by me or under my supervision, that the 'as-built' information shown on these drawings was added by me or under my supervision, and that this 'as-built' information is true and correct to the best of my knowledge and belief." Aldrich Land Surveying is not responsible for any of the design concepts, calculations, engineering, or interpretations of the record drawings.

Timothy Aldrich, PLS — 08-11-04 Date

NOTES

1. AMAFCA FIELD ENGINEER SHALL BE NOTIFIED 48-HOURS PRIOR TO ANY WORK WITHING THE AMAFCA R/W OR EASEMENT. TEL (505) 884-2215 JERRY LOVATO.

2. NO WORK WILL BE PERFORMED IN THE AMAFCA R/W BETWEEN MAY 15 AND OCTOBER 15 WITHOUT WRITTEN PERMISSION FROM AMAFCA.

3. ALL SUBGRADE, BACKFILL AND EMBANKMENT SHALL BE COMPACTED TO 95% (MODIFIED PROCTOR) WITHIN THE AMAFCA R/W. TESTING REPORTS SHALL BE PROVIDED TO AMAFCA FIELD ENGINEER.

4. AMAFCA FIELD ENGINEER WILL BE NOTIFIED 48 HOURS PRIOR TO FINAL INSPECTION OF ANY FACILITES WITHIN THE AMAFCA R/W.

5. ALL DISTURBED GROUND AREAS SHALL BE REVEGETATED IN ACCORDANCE WITH CITY OF ALBUQUERQUE STANDARD SPECIFICATIONS FOR PUBLIC WORKS CONSTRUCTION. SECTION 1012 NATIVE GRASS SEEDING AS CURRENTLY UPDAITED.

APPROVED FOR CONSTRUCTION WITHIN AMAFCA RIGHT OF WAY OR EASEMENT:

(FOR AMAFCA) 1/20/04 (DATE)

Bohannan ▲ Huston INC
Courtyard I 7500 Jefferson St. NE Albuquerque, NM 87109-4335
ENGINEERING ▲ SPATIAL DATA ▲ ADVANCED TECHNOLOGIES

1 2 3 4 5 6 7 8 9 10 11 12 13 14 15
26 7227 81 0105

REV.	SHEETS	CITY ENGINEER	DATE	USER DEPARTMENT	DATE	USER DEPARTMENT	DATE

ENGINEERS STAMP & SIGNATURE

LYNN RICHARD BERLAND NEW MEXICO 14925 PROFESSIONAL ENGINEER 12/15/04

APPROVALS	ENGINEER	DATE
DRC Chairman		1-28-04
Transportation		12/19/03
Water/Wastewater		12/22/03
Hydrology		12/26/03
Parks		
Const. Coord.		-28-04
AMAFCA		1/20/04

APPROVED FOR CONSTRUCTION

City Engineer — Date 2-03-04

City Project No. 722781

Sheet 1 Of 27

BHI JOB NO.040111

DATE:

SCANNED BY MESA REPRO

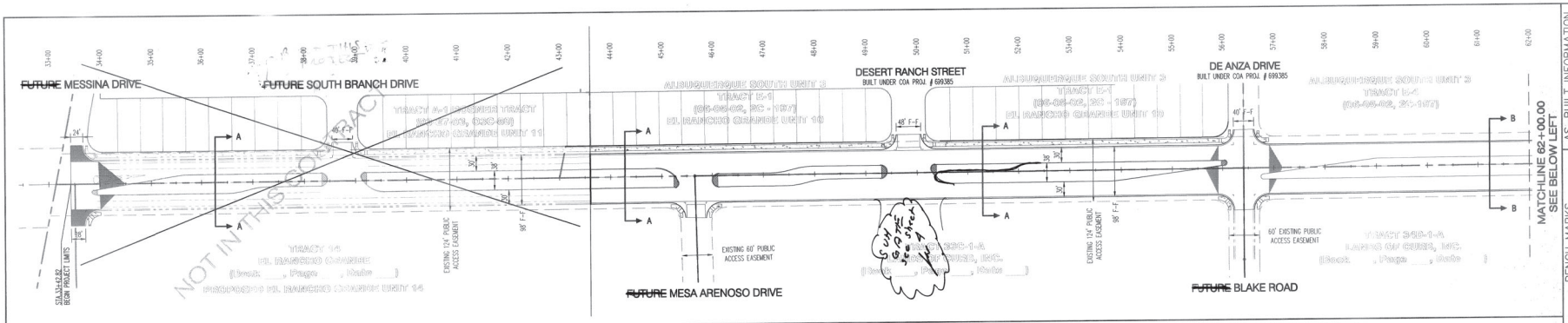

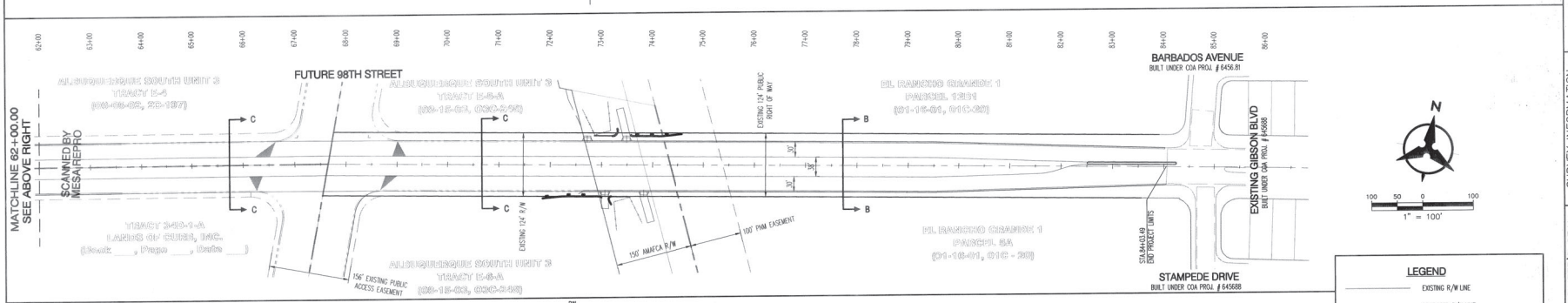

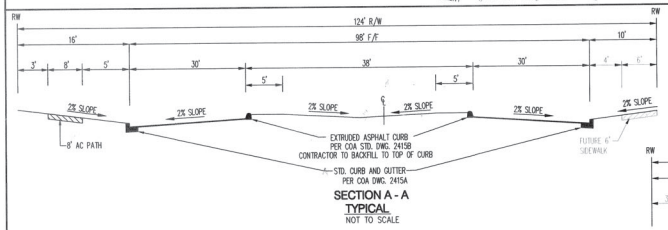

SECTION A - A
TYPICAL
NOT TO SCALE

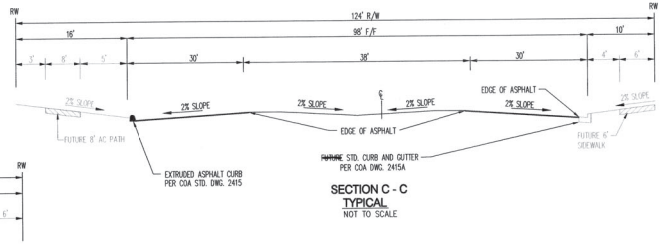

SECTION C - C
TYPICAL
NOT TO SCALE

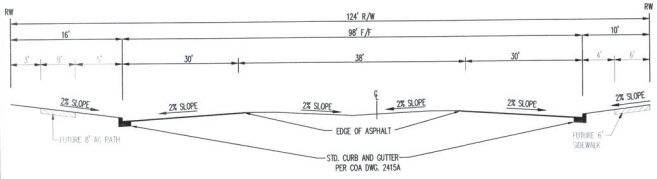

SECTION B - B
TYPICAL
NOT TO SCALE

GENERAL NOTES

1. THE CONTRACTOR SHALL FIELD VERIFY ALL EXISTING UTILITY LOCATIONS AND NOTIFY THE ENGINEER IMMEDIATELY OF ANY DISCREPANCIES.
2. ALL CURVE DATA AND DIMENSIONS REFER TO FACE OF CURB UNLESS OTHERWISE SPECIFIED.
3. GRADE ELEVATIONS, WHERE NOTED, ARE FOR FLOWLINE OF CURB UNLESS OTHERWISE SPECIFIED
4. CONTRACTOR IS RESPONSIBLE FOR REPAIR AND/OR REPLACEMENT OF ALL UTILITY CONDUITS AND EXISTING LINES.
5. ANY ADDITIONAL GRADING REQUIRED TO MATCH PROPOSED STREET GRADES SHALL BE INCIDENTAL TO PAVING ITEMS.
6. CONTRACTOR SHALL PARK EQUIPMENT AND VEHICLES AS NOT TO INTERFERE WITH NORMAL ACTIVITIES OF RESIDENTS OR OTHER CONTRACTORS ON SITE.
7. ANY DAMAGE TO THE EXISTING FACILITIES, (C&G), PAVEMENT, CONDUITS, LANDSCAPING, UTILITY LINES, ETC.) DURING CONSTRUCTION SHALL BE REPLACED AT THE CONTRACTORS' EXPENSE.
8. REMOVAL OF THE EXISTING C&G SHALL BE AS PER COA STD. DWG. 2415 (SAWCUT ONLY).
9. WHEELCHAIR RAMPS SHALL BE CONSTRUCTED PRIOR TO ACCEPTANCE OF CURB & GUTTER.
10. DENOTES CROWN TRANSITION PER COA STD DWG. 2401.
11. FOR CURB RETURN & QUARTER POINT ELEV INFO REFER TO INDIVIDUAL PAVING SHEETS.
12. MH RIMS & CATCH BASIN INLET ELEVATIONS ARE APPROXIMATE. CONTRACTOR SHALL FIELD VERIFY AND ADJUST TO FINAL PAVEMENT ELEVATIONS.
13. CONTRACTOR SHALL FIELD VERIFY ALL EXISTING UTILITIES AND TRANSMISSION GAS LINES. CONTRACTOR SHALL COORDINATE RELOCATION OF UTILITY LINES WITH UTILITY COMPANIES AS REQUIRED.

1 2 3 4 5 6 7 8 9 10 11 12 13 14 15
26 7227.81 0209

LEGEND

- EXISTING R/W LINE
- PROPOSED R/W LINE
- PROPERTY LINE
- PROPOSED CURB & GUTTER
- PROPOSED PHASE BOUNDARY
- EASEMENT
- FUTURE CURB & GUTTER
- PROPOSED STORM DRAIN MANHOLE
- PROPOSED STORM DRAIN INLET
- PROPOSED MAIN VALVE
- PROPOSED SAS MANHOLE
- PROPOSED WHEELCHAIR RAMP

Bohannan ▲ Huston INC.
Courtyard I 7500 Jefferson St. NE Albuquerque, NM 87109-4335
ENGINEERING ▲ SPATIAL DATA ▲ ADVANCED TECHNOLOGIES

CITY OF ALBUQUERQUE
PUBLIC WORKS DEPARTMENT

GIBSON BLVD. STREET IMPROVEMENTS
OVERALL PAVING PLAN

Design Review Committee	City Engineer Approval	Last Design Update	Mo./Day/Yr.	Mo./Day/Yr.
APPROVED JAN 28 2004 DEVELOPMENT REVIEW BOARD	APPROVED FEB - 4 2004 CITY ENGINEER			

City Project No.	Zone Map No.	Sheet	Of
722781	M-9, N-9	2	27

AS-BUILT INFORMATION
CONTRACTOR New Construction DATE
WORK STAKED BY AIS DATE 1/04
INSPECTOR'S ACCEPTANCE BY KLL DATE 8/04
FIELD VERIFICATION BY AIS DATE 8/04
DRAWINGS CORRECTED BY AIS DATE 8/04
MICROFILM INFORMATION
RECORDED BY DATE
B.C.P. - Tatlock
Hilo Stetler

BENCH MARKS
ACS BRASS TABLET STAMPED "TRANS"
Geographic Position (NAD 1927)
N.M. State Plane Coordinates (Central Zone)
X= 354,899.45 Y= 1,471,822.67
Ground-to-Grid Factor = 0.99967921
B.C. = 00°16'42"
SLD 1929 Elevation = 5118.43

SURVEY INFORMATION
FIELD NOTES

NO.	BY	DATE

ENGINEER'S SEAL
REGISTERED PROFESSIONAL ENGINEER RICHARD LYNN BOHANNAN 10398 NEW MEXICO USA

No.	Date	REMARKS	By
		REVISIONS	
		DESIGN	

Designed By: SJS DATE: 05/03
Drawn By: BJG DATE: 05/03
Checked By: SJS DATE: 05/03

P:\040111\cdp\general\040111_OPAV.dwg
January 15, 2004 - 11:19am

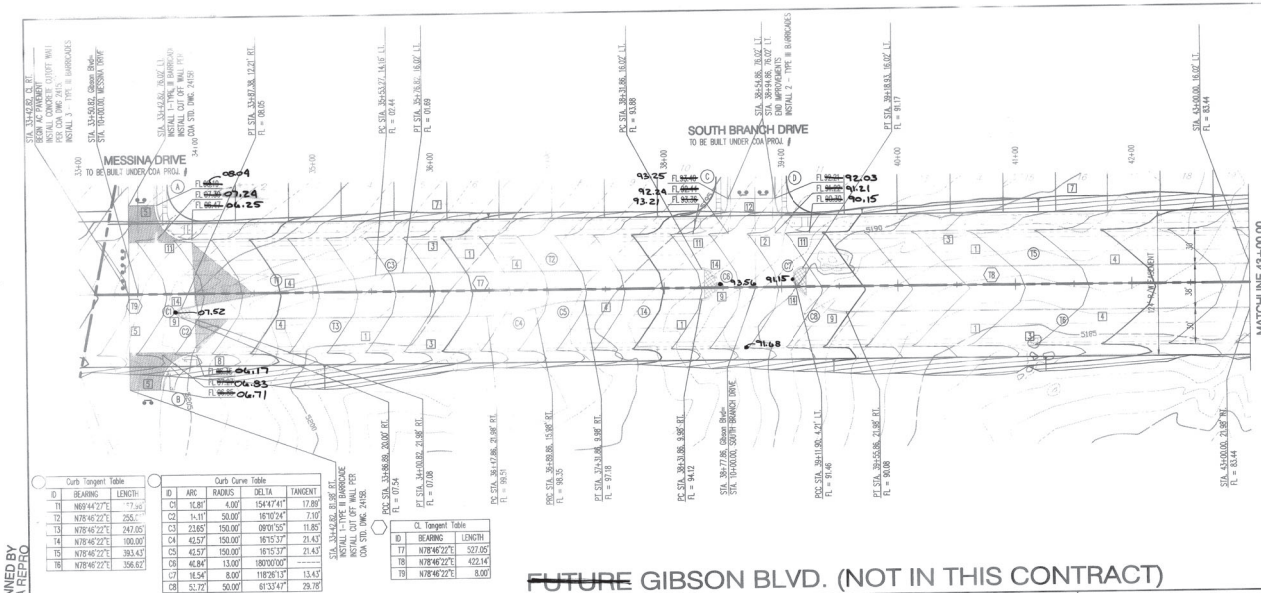

Curb Tangent Table		
ID	BEARING	LENGTH
T1	N69°44'22"E	17.96'
T2	N78°46'22"E	255.[illegible]
T3	N78°46'22"E	247.05'
T4	N78°46'22"E	100.05'
T5	N78°46'22"E	393.43'
T6	N78°46'22"E	356.62'

Curb Curve Table				
ID	ARC	RADIUS	DELTA	TANGENT
C1	15.81'	4.00'	154°47'41"	17.89'
C2	1x.11'	50.00'	16°10'24"	7.10'
C3	23.65'	150.00'	09°01'55"	11.85'
C4	42.57'	150.00'	16°15'37"	21.43'
C5	42.57'	150.00'	16°15'37"	21.43'
C6	40.84'	13.00'	180°00'00"	------
C7	16.54'	8.00'	118°26'13"	13.43'
C8	51.72'	50.00'	61°33'47"	29.78'

CL Tangent Table		
ID	BEARING	LENGTH
T7	N78°46'22"E	527.05'
T8	N78°46'22"E	422.14'
T9	N78°46'22"E	8.00'

STA. 33+96.82, 46.02' LT.
PC CURB RETURN

FLOWLINE DATA (A)

PC	06.47	Δ=90°00'00"
1	06.92	R=30.00'
2	07.36	T=30.00'
3	07.78	L=47.12'
PT	08.19	

STA. 33+66.82, 1.02' LT.
PT CURB RETURN

STA. 33+96.82, 46.02' LT.
PC CURB RETURN

FLOWLINE DATA (B)

PC	06.85	Δ=90°00'00"
1	06.98	R=30.00'
2	06.94	T=30.00'
3	06.73	L=47.12'
PT	06.35	

STA. 33+66.82, 76.02' LT.
PT CURB RETURN

STA. 38+54.86, 76.02' LT.
PC CURB RETURN

FLOWLINE DATA (C)

PC	93.40
1	93.04
2	92.91
3	93.02
PT	93.36

Δ=90°00'00"
R=30.00'
T=30.00'
L=47.12'

STA. 38+24.86, 46.02' LT.
PT CURB RETURN

STA 39+24.86, 46.02' LT.
PC CURB RETURN

FLOWLINE DATA (D)

PC	90.30
1	90.76
2	91.24
3	91.72
PT	92.21

Δ=90°00'00"
R=30.00'
T=30.00'
L=47.12'

STA. 38+94.86, 76.02' LT.
PT CURB RETURN

NOTES

1. THE CONTRACTOR SHALL FIELD VERIFY ALL EXISTING UTILITY LOCATIONS AND NOTIFY THE ENGINEER IMMEDIATELY OF ANY DISCREPANCIES.
2. ALL CURB RETURN RADII SHALL BE 30' UNLESS OTHERWISE SPECIFIED.
3. ALL CURVE DATA AND DIMENSIONS REFER TO FACE OF CURB UNLESS OTHERWISE SPECIFIED.
4. GRADE ELEVATIONS, WHERE NOTED, ARE FOR FLOWLINE OF CURB UNLESS OTHERWISE SPECIFIED.
5. CONTRACTOR IS TO INSTALL A 4"x 4"x 5' POST AND END AT THE END OF EACH SANITARY SEWER SERVICE.
6. CONTRACTOR IS RESPONSIBLE FOR REPAIR AND/OR REPLACEMENT OF ALL UTILITY CONDUITS AND EXISTING LINES.
7. ANY ADDITIONAL GRADING REQUIRED TO MATCH PROPOSED STREET GRADES SHALL BE INCIDENTAL TO PAVING ITEMS.
8. CONTRACTOR SHALL PROVIDE THE INSPECTORS, (CITY AND PRIVATE) WITH THE PROPOSED HYDROSTATIC TESTING PLAN. THE PLAN MUST BE APPROVED BEFORE TESTING OPERATIONS BEGIN.
9. CONTRACTOR SHALL PARK EQUIPMENT AND VEHICLES AS NOT TO INTERFERE WITH NORMAL ACTIVITIES OF RESIDENTS OR OTHER CONTRACTORS ON SITE.
10. ANY DAMAGE TO THE EXISTING FACILITIES (CURB & GUTTER, PAVEMENT, CONDUITS, LANDSCAPING, UTILITY LINES ETC.) DURING CONSTRUCTION SHALL BE REPLACED AT THE CONTRACTORS' EXPENSE.
11. REMOVAL OF THE EXISTING CURB & GUTTER SHALL BE PER COA STD DWG. 2415 (SAWCUT ONLY).
12. WHEELCHAIR RAMPS SHALL BE CONSTRUCTED PRIOR TO ACCEPTANCE OF CURB & GUTTER.

FUTURE KEYED NOTES (NOT IN THIS CONTRACT)

1. BUILD ARTERIAL PAVEMENT PER ARTERIAL SECTION, SHEET 13.
2. INSTALL 6' CONCRETE VALLEY GUTTER PER COA STD. DWG. 2420.
3. BUILD STD. CURB & GUTTER PER COA STD. DWG. 2415A.
4. BUILD EXTRUDED ASPHALT CURB PER COA STD. DWG. 2415B.
5. * EDGE OF PROPOSED ASPHALT.
6. * BUILD 6' SIDEWALK PER COA STD. DWG. 2430.
7. BUILD 8' ASPHALT PATH PER COA STD. DWG. 2415B & DETAIL SHEET 13.
8. INSTALL SPECIAL HANDICAP RAMP 'B' SHEET 13.
9. BUILD MEDIAN CURB & GUTTER PER COA STD. DWG. 2415B.
10. * BUILD CONCRETE MEDIAN PAVING PER COA STD DWG. 2408.
11. INSTALL HANDICAP RAMP PER HANDICAP RAMP DETAIL 'B'. SEE SHEET 3.
12. BUILD RESIDENTIAL PAVEMENT PER RESIDENTIAL SECTION, SHEET 13.
13. * BUILD TEMPORARY PAVEMENT PER TEMPORARY SECTION, SHEET 13.
14. INSTALL 4" STAMPED CONCRETE 10' BACK FROM MEDIAN NOSE BAIA RED, RUNNING BOND PATTERN.

1 2 3 4 5 6 7 8 9 10 11 12 13 14 15
2 6 7 2 2 7 . 8 1 0 3 0 8

* NOT USED THIS SHEET.

FUTURE GIBSON BLVD. (NOT IN THIS CONTRACT)

ELEVATIONS ARE IN NGVD 29

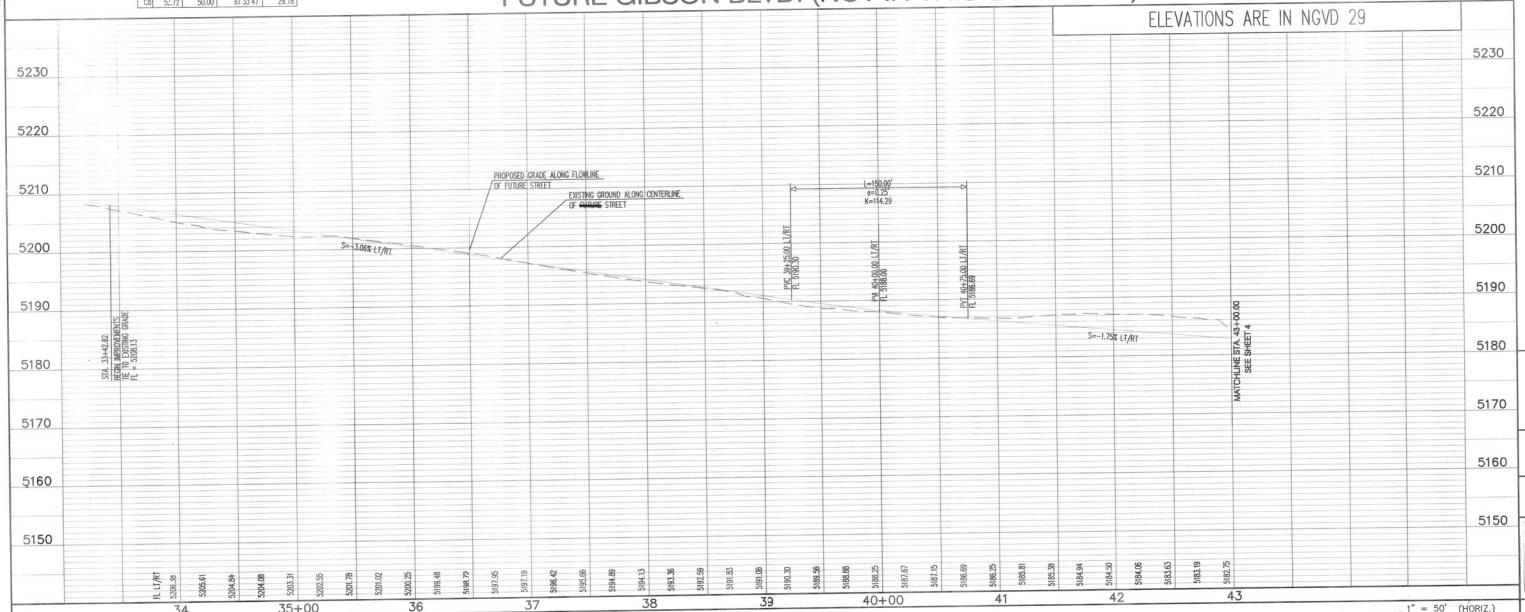

SCALE: 1" = 50' (HORIZ.) 1" = 10' (VERT.)

Bohannan ▲ Huston
Courtyard I 7500 Jefferson St. NE Albuquerque, NM 87109-4335
ENGINEERING ▲ SPATIAL DATA ▲ ADVANCED TECHNOLOGIES

CITY OF ALBUQUERQUE
PUBLIC WORKS DEPARTMENT

GIBSON BLVD. IMPROVEMENTS
PAVING PLAN AND PROFILE
FUTURE GIESON BLVD. 33+00.00 - 44+00.00

Design Review Committee: APPROVED JAN 28 2004 DESIGN REVIEW COMMITTEE
City Engineer Approval: APPROVED FEB - 4 2004 CITY ENGINEER
Last Design Update | Mo./Day/Yr. | Mo./Day/Yr.

No.	Date	REMARKS	By
		REVISIONS	
		DESIGN	

Designed By: SJS DATE: 08/03
Drawn By: DH DATE: 08/03
Checked By: SJS DATE: 08/03

City Project No. 722781 | Zone Map No. M-9, N-9 | Sheet 3 Of 27

AS-BUILT INFORMATION
CONTRACTOR New Concepts DATE
STAKED BY ALS DATE May
INSPECTOR ACCEPTANCE BY LCL DATE May
INSPECTOR REVISION BY ALS DATE May
INSPECTOR CORRECTION BY ALS DATE May
MICROFILM INFORMATION
RECORDED BY DATE
W.O.A.-Engineer Mike Stokes

BENCH MARKS
ACS BRASS TABLET STAMPED "TRANS"
Geographic Position (NAD 1927)
N.M. State Plane Coordinates (Central Zone)
X= 354,899.45 Y= 1,471,822.67
Ground-to-Grid Factor 0.99997921
Δ∠ = -00°16'42"
SLD 1929 Elevation = 5118.43

SURVEY INFORMATION
FIELD NOTES
NO. BY DATE

ENGINEER'S SEAL
REGISTERED PROFESSIONAL ENGINEER
12/10/03

SCANNED BY MESA REPRO

P:\040111\cdp\prp\040111_PNP01.dwg
December 15, 2003 - 4:06pm

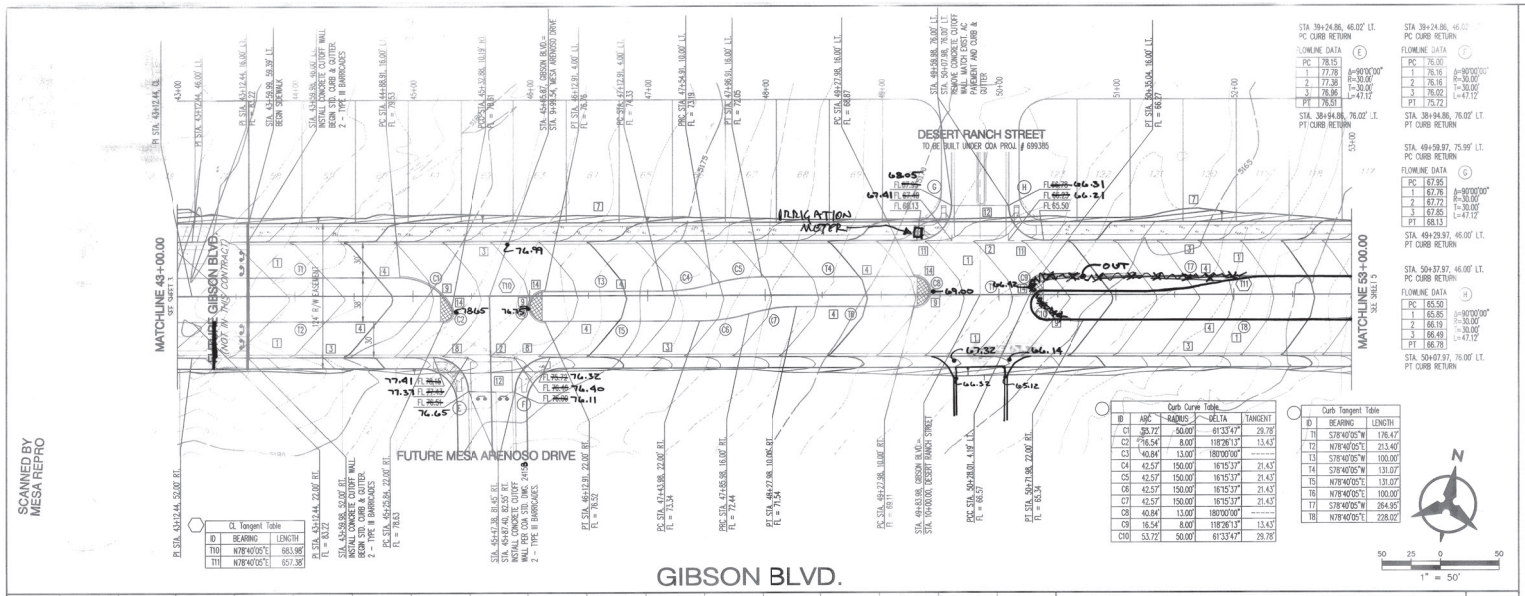

CL Tangent Table		
ID	BEARING	LENGTH
T10	N78°40'05"E	683.98'
T11	N78°40'05"E	657.38'

Curb Curve Table				
ID	ARC	RADIUS	DELTA	TANGENT
C1	55.72'	50.00'	61°33'47"	29.78'
C2	16.54'	8.00'	118°26'13"	13.43'
C3	40.84'	13.00'	180°00'00"	------
C4	42.57'	150.00'	16°15'37"	21.43'
C5	42.57'	150.00'	16°15'37"	21.43'
C6	42.57'	150.00'	16°15'37"	21.43'
C7	42.57'	150.00'	16°15'37"	21.43'
C8	40.84'	13.00'	180°00'00"	------
C9	16.54'	8.00'	118°26'13"	13.43'
C10	53.72'	50.00'	61°33'47"	29.78'

Curb Tangent Table		
ID	BEARING	LENGTH
T1	S78°40'05"W	176.47'
T2	N78°40'05"E	213.40'
T3	S78°40'05"W	100.00'
T4	S78°40'05"W	131.07'
T5	N78°40'05"E	131.07'
T6	N78°40'05"E	100.00'
T7	S78°40'05"W	264.95'
T8	N78°40'05"E	228.02'

SCANNED BY MESA REPRO

GIBSON BLVD.

ELEVATIONS ARE IN NGVD 29

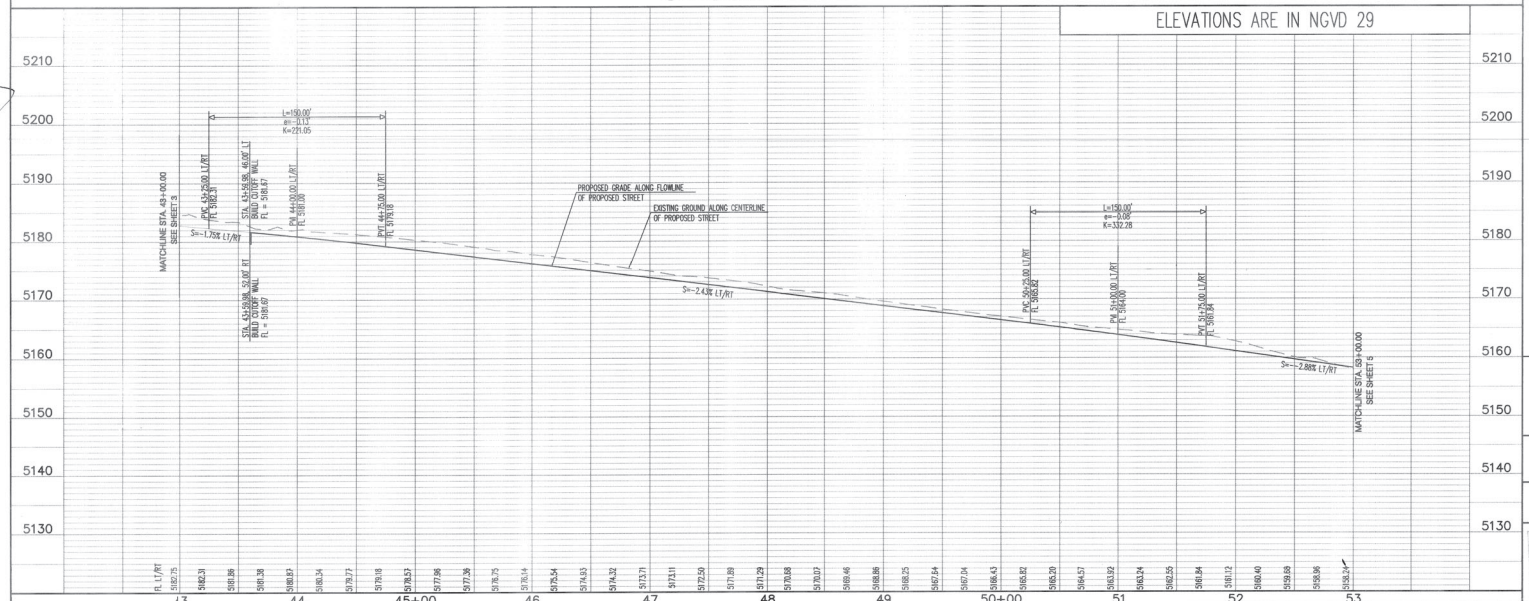

P:\040111\cdp\pnp\040111_PNP02.dwg
December 15, 2003 – 4:07pm

SCALE: 1" = 50' (HORIZ.) 1" = 10' (VERT.)

NOTES

1. THE CONTRACTOR SHALL FIELD VERIFY ALL EXISTING UTILITY LOCATIONS AND NOTIFY THE ENGINEER IMMEDIATELY OF ANY DISCREPANCIES.
2. ALL CURB RETURN RADII SHALL BE 30' UNLESS OTHERWISE SPECIFIED.
3. ALL CURVE DATA AND DIMENSIONS REFER TO FACE OF CURB UNLESS OTHERWISE SPECIFIED.
4. GRADE ELEVATIONS, WHERE NOTED, ARE FOR FLOWLINE OF CURB UNLESS OTHERWISE SPECIFIED.
5. CONTRACTOR IS TO INSTALL / 4"x 4"x 5' POST AND END AT THE END OF EACH SANITARY SEWER SERVICE.
6. CONTRACTOR IS RESPONSIBLE FOR REPAIR AND/OR REPLACEMENT OF ALL UTILITY CONDUITS AND EXISTING LINES.
7. ANY ADDITIONAL GRADING REQUIRED TO MATCH PROPOSED STREET GRADES SHALL BE INCIDENTAL TO PAVING ITEMS.
8. CONTRACTOR SHALL PROVIDE THE INSPECTORS, (CITY AND PRIVATE) WITH THE PROPOSED HYDROSTATIC TESTING PLAN. THE PLAN MUST BE APPROVED BEFORE TESTING OPERATIONS BEGIN.
9. CONTRACTOR SHALL PARK EQUIPMENT AND VEHICLES AS NOT TO INTERFERE WITH NORMAL ACTIVITIES OF RESIDENTS OR OTHER CONTRACTORS ON SITE.
10. ANY DAMAGE TO THE EXISTING FACILITIES (CURB & GUTTER, PAVEMENT, CONDUITS, LANDSCAPING, UTILITY LINES ETC.) DURING CONSTRUCTION SHALL BE REPLACED AT THE CONTRACTORS' EXPENSE.
11. REMOVAL OF THE EXISTING CURB & GUTTER SHALL BE PER COA STD. DWG. 2415 (SAWCUT ONLY).
12. WHEELCHAIR RAMPS SHALL BE CONSTRUCTED PRIOR TO ACCEPTANCE OF CURB & GUTTER.

KEYED NOTES

1. BUILD ARTERIAL PAVEMENT PER ARTERIAL SECTION, SHEET 13.
2. INSTALL 6' CONCRETE VALLEY GUTTER PER COA STD. DWG. 2420.
3. BUILD STD. CURB & GUTTER PER COA STD. DWG. 2415A.
4. BUILD EXTRUDED ASPHALT CURB PER COA STD DWG. 2415B.
5. * EDGE OF PROPOSED ASPHALT.
6. * BUILD 6' SIDEWALK PER COA STD. DWG. 2430.
7. BUILD 8' ASPHALT PATH PER COA STD. DWG. 2415B & DETAIL SHEET 13.
8. INSTALL SPECIAL HANDICAP RAMP 'B' SHEET 13.
9. BUILD MEDIAN CURB & GUTTER PER COA STD. DWG. 2415B.
10. * BUILD CONCRETE MEDIAN PAVING PER COA STD DWG. 2408.
11. INSTALL HANDICAP RAMP PER HANDICAP RAMP DETAIL 'B'. SEE SHEET 13.
12. BUILD RESIDENTIAL PAVEMENT PER RESIDENTIAL SECTION, SHEET 13.
13. * BUILD TEMPORARY PAVEMENT PER TEMPORARY SECTION, SHEET 13.
14. INSTALL 4" STAMPED CONCRETE 10' BACK FROM MEDIAN NOSE BAJA RED, RUNNING BOND PATTERN.

1 2 3 4 5 6 7 8 9 10 11 12 13 14 15
2 4 7 2 2 7 . 8 1 0 4 0 5

* NOT USED THIS SHEET.

Bohannan ▲ Huston
Courtyard I 7500 Jefferson St. NE Albuquerque, NM 87109-4335
ENGINEERING ▲ SPATIAL DATA ▲ ADVANCED TECHNOLOGIES

AS-BUILT INFORMATION
CONTRACTOR New Construction — DATE
WORK STAKED BY AIS — DATE
INSPECTED BY LCL — DATE July
FIELD DRAWINGS BY AIS — DATE 8/04
COMPUTER DRAWINGS BY AIS — DATE 8/04
MICROFILM INFORMATION
RECORDED BY — DATE
NO.

BENCH MARKS
ACS BRASS TABLET STAMPED "TRANS"
Geographic Position (NAD 1927)
N.M. State Plane Coordinates (Central Zone)
X= 354,859.41 Y= 1,471,622.07
Ground to Grid Factor = 0.99966192
$\Delta\alpha$ = -00°16'42"
SLD 1929 Elevation = 5118.43

SURVEY INFORMATION
FIELD NOTES
NO. | BY | DATE

ENGINEER'S SEAL
NEW MEXICO LICENSED PROFESSIONAL SURVEYOR 12/10/03

No.	Date	REMARKS	By
		REVISIONS	
		DESIGN	

Designed By: SJS — DATE: 08/03
Drawn By: DH — DATE: 08/03
Checked By: SJS — DATE: 08/03

CITY OF ALBUQUERQUE
PUBLIC WORKS DEPARTMENT

GIBSON BLVD. IMPROVEMENTS
PAVING PLAN AND PROFILE
GIBSON BLVD. 44+00.00 - 54+00.00

Design Review Committee	City Engineer Approval	Last Design Update	Mo./Day/Yr.	Mo./Day/Yr.
JAN 28 2004 DESIGN REVIEW COMMITTEE	FEB - 4 2004 CITY ENGINEER			

City Project No.	Zone Map No.	Sheet	Of
722781	M-9, N-9	4	27

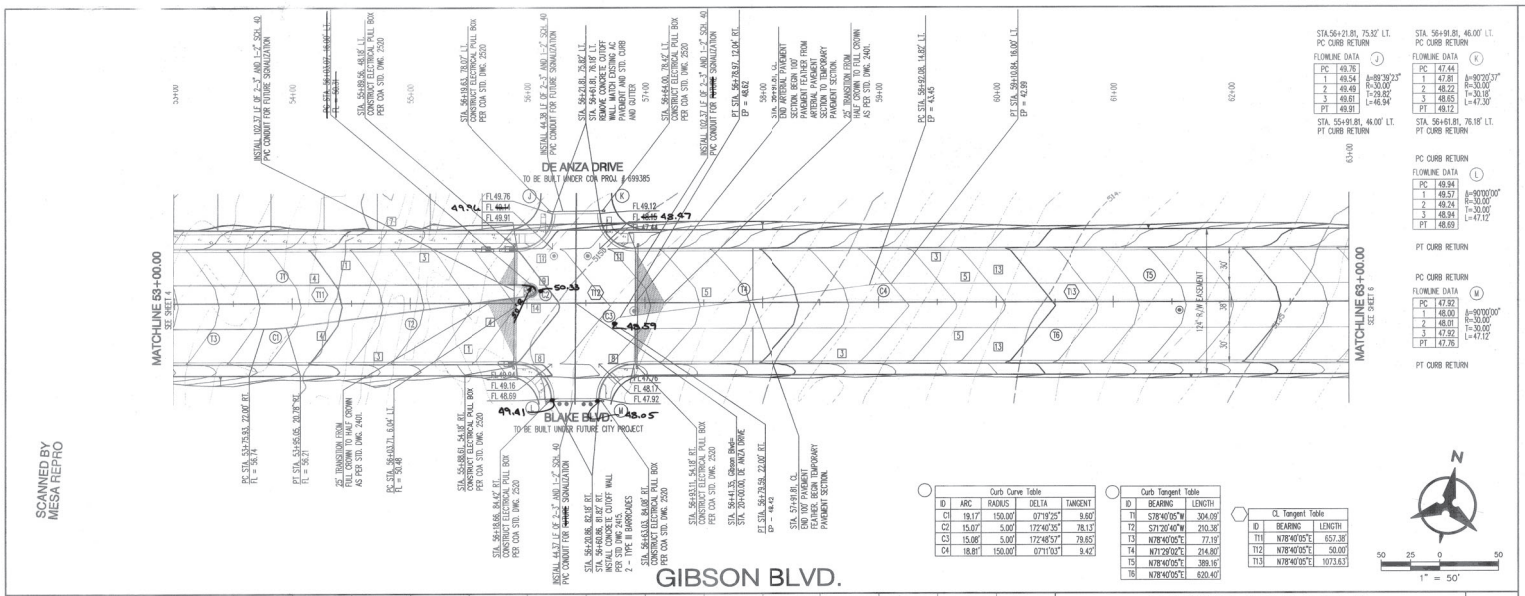

Curb Curve Table				
ID	ARC	RADIUS	DELTA	TANGENT
C1	19.17'	150.00'	07°19'25"	9.60'
C2	15.07'	5.00'	172°40'35"	78.13'
C3	15.08'	5.00'	172°48'57"	79.65'
C4	18.81'	150.00'	07°11'03"	9.42'

Curb Tangent Table		
ID	BEARING	LENGTH
T1	S78°40'05"W	304.09'
T2	S71°20'40"W	210.38'
T3	N78°40'05"E	77.19'
T4	N71°29'02"E	214.80'
T5	N78°40'05"E	389.16'
T6	N78°40'05"E	620.40'

CL Tangent Table		
ID	BEARING	LENGTH
T11	N78°40'05"E	657.38'
T12	N78°40'05"E	50.00'
T13	N78°40'05"E	1073.63'

STA. 56+21.81, 75.32' LT.
PC CURB RETURN

FLOWLINE DATA (J)

PC	49.76	Δ=89°38'23"
1	49.54	R=30.00'
2	49.49	T=29.82'
3	49.81	L=46.94'
PT	49.91	

STA. 55+91.81, 46.00' LT.
PT CURB RETURN

STA. 56+91.81, 46.00' LT.
PC CURB RETURN

FLOWLINE DATA (K)

PC	47.81	Δ=90°20'37"
1	48.22	R=30.00'
2	48.65	T=30.18'
PT	49.12	L=47.30'

STA. 56+61.81, 76.18' LT.
PT CURB RETURN

PC CURB RETURN

FLOWLINE DATA (L)

PC	49.94	Δ=90°00'00"
1	49.57	R=30.00'
2	49.24	T=30.00'
3	48.94	L=47.12'
PT	48.69	

PT CURB RETURN

PC CURB RETURN

FLOWLINE DATA (M)

PC	47.92	Δ=90°00'00"
1	48.00	R=30.00'
2	48.01	T=30.00'
3	47.92	L=47.12'
PT	47.76	

PT CURB RETURN

NOTES

1. THE CONTRACTOR SHALL FIELD VERIFY ALL EXISTING UTILITY LOCATIONS AND NOTIFY THE ENGINEER IMMEDIATELY OF ANY DISCREPANCIES.
2. ALL CURB RETURN RADII SHALL BE 30' UNLESS OTHERWISE SPECIFIED.
3. ALL CURVE DATA AND DIMENSIONS REFER TO FACE OF CURB UNLESS OTHERWISE SPECIFIED.
4. GRADE ELEVATIONS, WHERE NOTED, ARE FOR FLOWLINE OF CURB UNLESS OTHERWISE SPECIFIED.
5. CONTRACTOR IS TO INSTALL A 4"x 4"x 5' POST AND END AT THE END OF EACH SANITARY SEWER SERVICE.
6. CONTRACTOR IS RESPONSIBLE FOR REPAIR AND/OR REPLACEMENT OF ALL UTILITY CONDUITS AND EXISTING LINES.
7. ANY ADDITIONAL GRADING REQUIRED TO MATCH PROPOSED STREET GRADES SHALL BE INCIDENTAL TO PAVING ITEMS.
8. CONTRACTOR SHALL PROVIDE THE INSPECTORS, (CITY AND PRIVATE) WITH THE PROPOSED HYDROSTATIC TESTING PLAN. THE PLAN MUST BE APPROVED BEFORE TESTING OPERATIONS BEGIN.
9. CONTRACTOR SHALL PARK EQUIPMENT AND VEHICLES AS NOT TO INTERFERE WITH NORMAL ACTIVITIES OF RESIDENTS OR OTHER CONTRACTORS ON SITE.
10. ANY DAMAGE TO THE EXISTING FACILITIES (CURB & GUTTER, PAVEMENT, CONDUITS, LANDSCAPING, UTILITY LINES ETC.) DURING CONSTRUCTION SHALL BE REPLACED AT THE CONTRACTORS' EXPENSE.
11. REMOVAL OF THE EXISTING CURB & GUTTER SHALL BE PER COA STD. DWG. 2415 (SAWCUT ONLY).
12. WHEELCHAIR RAMPS SHALL BE CONSTRUCTED PRIOR TO ACCEPTANCE OF CURB & GUTTER.

KEYED NOTES

1. BUILD ARTERIAL PAVEMENT PER ARTERIAL SECTION, SHEET 13.
* 2. INSTALL 6' CONCRETE VALLEY GUTTER PER COA STD. DWG. 2420.
3. BUILD STD. CURB & GUTTER PER COA STD. DWG. 2415A.
4. BUILD EXTRUDED ASPHALT CURB PER COA STD. DWG. 2415B.
5. EDGE OF PROPOSED ASPHALT.
* 6. BUILD 6' SIDEWALK PER COA STD. DWG. 2430.
7. BUILD 8' ASPHALT PATH PER COA STD. DWG. 2415B & DETAIL SHEET 13.
8. INSTALL SPECIAL HANDICAP RAMP 'B' SHEET 13.
9. BUILD MEDIAN CURB & GUTTER PER COA STD. DWG. 2415B.
* 10. BUILD CONCRETE MEDIAN PAVING PER COA STD DWG. 2408.
11. INSTALL HANDICAP RAMP PER HANDICAP RAMP DETAIL 'B'. SEE SHEET 13.
* 12. BUILD RESIDENTIAL PAVEMENT PER RESIDENTIAL SECTION, SHEET 13.
13. BUILD TEMPORARY PAVEMENT PER TEMPORARY SECTION, SHEET 13.
14. INSTALL 4" STAMPED CONCRETE 10' BACK FROM MEDIAN NOSE BAJA RED, RUNNING BOND PATTERN PER STD. DWG. 2408.

1 2 3 4 5 6 7 8 9 10 11 12 13 14 15
2G 7 2 2 2 7 . 1 8 1 0 5 0 5

* NOT USED THIS SHEET.

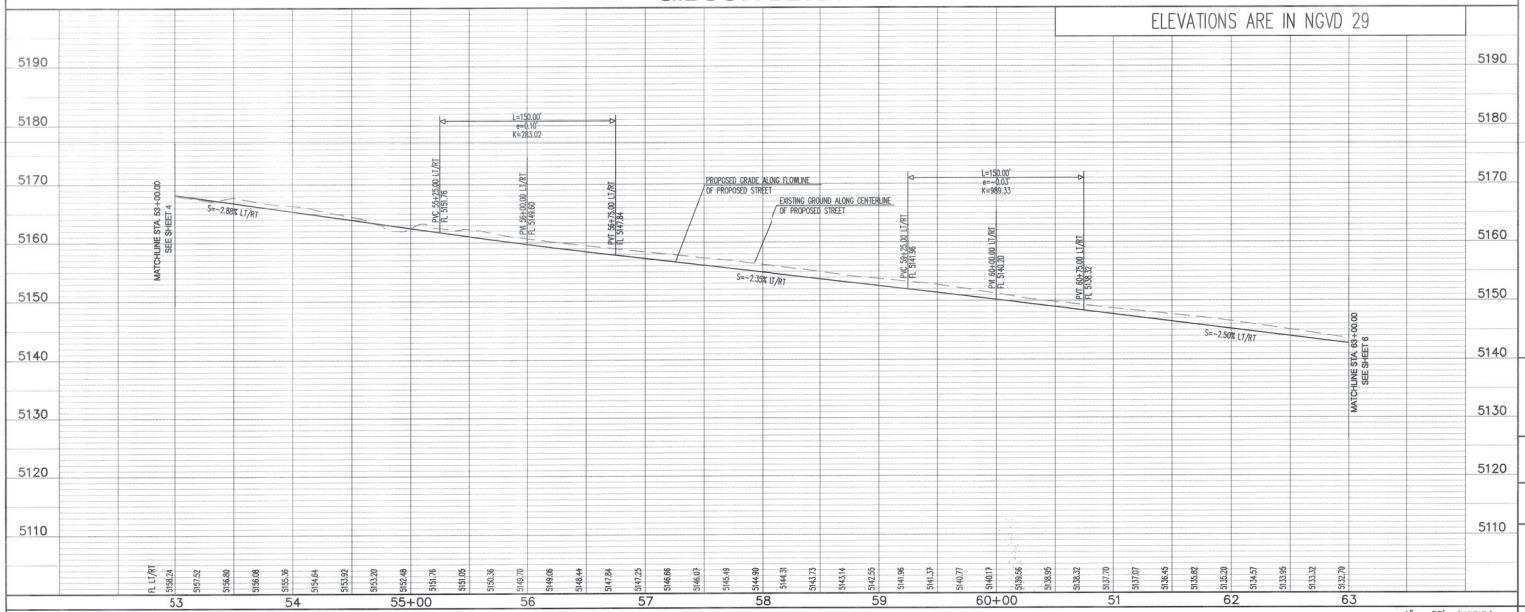

P:\040111\cdp\pnp\040111_PNP03.dwg
December 15, 2003 - 4:09pm

Bohannan ▲ Huston
Courtyard I 7500 Jefferson St. NE Albuquerque, NM 87109-4335
ENGINEERING ▲ SPATIAL DATA ▲ ADVANCED TECHNOLOGIES

CITY OF ALBUQUERQUE
PUBLIC WORKS DEPARTMENT

GIBSON BLVD. IMPROVEMENTS
PAVING PLAN AND PROFILE
GIBSON BLVD. 54+00.00 - 64+00.00

Design Review Committee	City Engineer Approval	Mo./Day/Yr.	Mo./Day/Yr.
APPROVED JAN 28 2004 DRB DESIGN REVIEW COMMITTEE	APPROVED FEB - 4 2004		

Last Design Update

City Project No.	Zone Map No.	Sheet	Of
722781	M-9, N-9	5	27

AS-BUILT INFORMATION
CONTRACTOR: New Concepts
Work staked by: AIS DATE
Field Verification by: LCL DATE 12/04/03
Drawings prepared by: AIS DATE 8/04
MICROFILM INFORMATION
RECORDED BY DATE
NO.

BENCH MARKS
A/S BRASS TABLET STAMPED "TRANS"
Geographic Position (NAD 1927)
N.M. State Plane Coordinates (Central Zone)
X= 354,889.45 Y= 1,471,822.87
Ground-to-Grid Factor = 0.999907921
ΔX = -00°16'42"
S.L.D. 1929 Elevation = 5118.43

SURVEY INFORMATION
FIELD NOTES

NO.	BY	DATE

ENGINEER'S SEAL
REGISTERED PROFESSIONAL ENGINEER
12/18/03

No.	Date	REMARKS	By
		REVISIONS	

DESIGN
Designed By: SJS DATE: 08/03
Drawn By: DH DATE: 08/03
Checked By: SJS DATE: 08/03

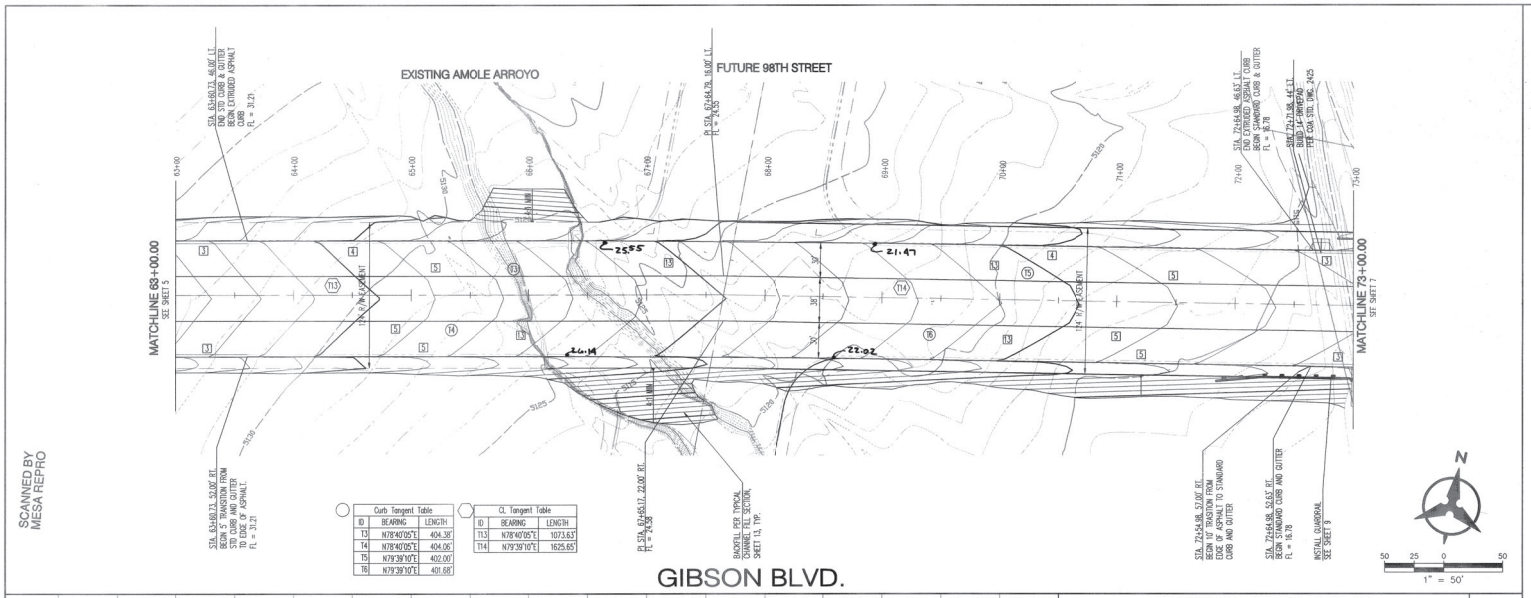

Curb Tangent Table		
ID	BEARING	LENGTH
T3	N78°40'05"E	404.38'
T4	N78°40'05"E	404.06'
T5	N79°39'10"E	402.00'
T6	N79°39'10"E	401.68'

CL Tangent Table		
ID	BEARING	LENGTH
T13	N78°40'05"E	1073.63'
T14	N79°39'10"E	1625.65'

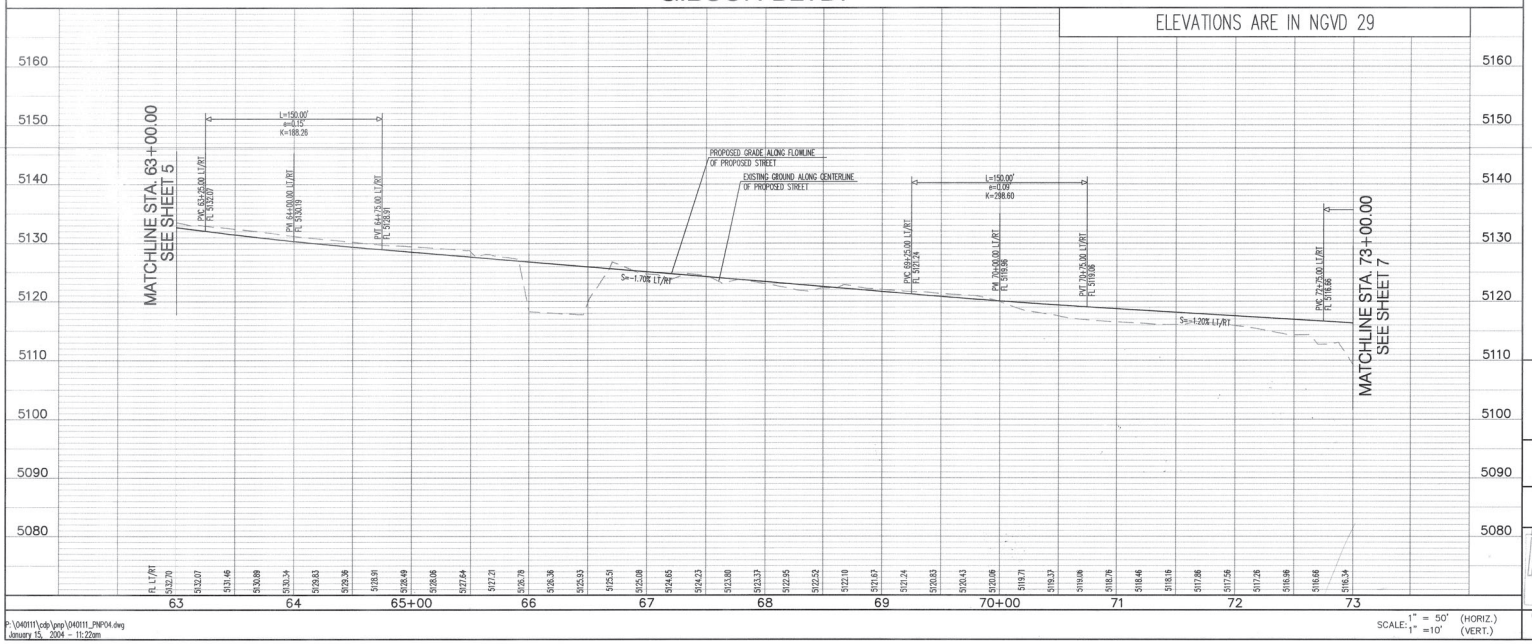

SCANNED BY MESA REPRO

NOTES

1. THE CONTRACTOR SHALL FIELD VERIFY ALL EXISTING UTILITY LOCATIONS AND NOTIFY THE ENGINEER IMMEDIATELY OF ANY DISCREPANCIES.
2. ALL CURB RETURN RADII SHALL BE 30' UNLESS OTHERWISE SPECIFIED.
3. ALL CURVE DATA AND DIMENSIONS REFER TO FACE OF CURB UNLESS OTHERWISE SPECIFIED.
4. GRADE ELEVATIONS, WHERE NOTED, ARE FOR FLOWLINE OF CURB UNLESS OTHERWISE SPECIFIED.
5. CONTRACTOR IS TO INSTALL A 4"x 4"x 5' POST AND END AT THE END OF EACH SANITARY SEWER SERVICE.
6. CONTRACTOR IS RESPONSIBLE FOR REPAIR AND/OR REPLACEMENT OF ALL UTILITY CONDUITS AND EXISTING LINES.
7. ANY ADDITIONAL GRADING REQUIRED TO MATCH PROPOSED STREET GRADES SHALL BE INCIDENTAL TO PAVING ITEMS.
8. CONTRACTOR SHALL PROVIDE THE INSPECTORS, (CITY AND PRIVATE) WITH THE PROPOSED HYDROSTATIC TESTING PLAN. THE PLAN MUST BE APPROVED BEFORE TESTING OPERATIONS BEGIN.
9. CONTRACTOR SHALL PARK EQUIPMENT AND VEHICLES AS NOT TO INTERFERE WITH NORMAL ACTIVITIES OF RESIDENTS OR OTHER CONTRACTORS ON SITE.
10. ANY DAMAGE TO THE EXISTING FACILITIES (CURB & GUTTER, PAVEMENT, CONDUITS, LANDSCAPING, UTILITY LINES ETC.) DURING CONSTRUCTION SHALL BE REPLACED AT THE CONTRACTORS' EXPENSE.
11. REMOVAL OF THE EXISTING CURB & GUTTER SHALL BE PER COA STD. DWG. 2415 (SAWCUT ONLY).
12. WHEELCHAIR RAMPS SHALL BE CONSTRUCTED PRIOR TO ACCEPTANCE OF CURB & GUTTER.

KEYED NOTES

* [1] BUILD ARTERIAL PAVEMENT PER ARTERIAL SECTION, SHEET 13.
* [2] INSTALL 6" CONCRETE VALLEY GUTTER PER COA STD. DWG. 2420.
* [3] BUILD STD. CURB & GUTTER PER COA STD. DWG. 2415A.
* [4] BUILD EXTRUDED ASPHALT CURB PER COA STD. DWG. 2415B.
* [5] EDGE OF PROPOSED ASPHALT.
* [6] BUILD 6' SIDEWALK PER COA STD. DWG. 2430.
* [7] BUILD 8' ASPHALT PATH PER COA STD. DWG. 2415B & DETAIL SHEET 13.
* [8] INSTALL SPECIAL HANDICAP RAMP 'B' SHEET 13.
* [9] BUILD MEDIAN CURB & GUTTER PER COA STD. DWG. 2415B.
* [10] BUILD CONCRETE MEDIAN PAVING PER COA STD DWG. 2408.
* [11] INSTALL HANDICAP RAMP PER HANDICAP RAMP DETAIL 'B'. SEE SHEET 13.
* [12] BUILD RESIDENTIAL PAVEMENT PER RESIDENTIAL SECTION, SHEET 13.
* [13] BUILD TEMPORARY PAVEMENT PER TEMPORARY SECTION, SHEET 13.
* [14] INSTALL 4" STAMPED CONCRETE 10' BACK FROM MEDIAN NOSE BAJA RED, RUNNING BOND PATTERN.

1 2 3 4 5 6 7 8 9 10 11 12 13 14 15
2 6 7 2 2 7 8 1 1 0 6 0 5

* NOT USED THIS SHEET.

Bohannan ▲ Huston
Courtyard I 7500 Jefferson St. NE Albuquerque, NM 87109-4335
ENGINEERING ▲ SPATIAL DATA ▲ ADVANCED TECHNOLOGIES

CITY OF ALBUQUERQUE
PUBLIC WORKS DEPARTMENT

GIBSON BLVD. IMPROVEMENTS
PAVING PLAN AND PROFILE
GIBSON BLVD. 64+00.00 - 74+00.00

Design Review Committee	City Engineer Approval	Last Design Update	Mo./Day/Yr.	Mo./Day/Yr.
APPROVED JAN 28 2004 DESIGN REVIEW COMMITTEE	APPROVED FEB - 4 2004 CITY ENGINEER			

City Project No.	Zone Map No.	Sheet	Of
722781	M-9, N-9	6	27

AS-BUILT INFORMATION
CONTRACTOR New Construct. DATE
STAKED BY AIS DATE
ACCEPTANCE BY LCL DATE 1/07
VERIFICATION BY AIS DATE 8/04
CORRECTED BY AIS DATE 8/04
MICROFILM INFORMATION
RECORDED BY DATE
NO.

BENCH MARKS
ACS BRASS TABLET STAMPED "TRANS"
Geographic Position (NAD 1927)
N.M. State Plane Coordinates (Central Zone)
X= 354,899.45 Y= 1,471,822.67
Ground-to-Grid Factor = 0.99967921
$\Delta\alpha$ = -00°16'42"
SLD 1929 Elevation = 5118.43

SURVEY INFORMATION
FIELD NOTES
NO. BY DATE

ENGINEER'S SEAL

No.	Date	REMARKS	By
		REVISIONS	

DESIGN
Designed By: SJS DATE: 08/03
Drawn By: DH DATE: 08/03
Checked By: SJS DATE: 08/03

P:\040111\cdp\prp\040111_PNP04.dwg
January 15, 2004 - 11:22am

SCALE: 1" = 50' (HORIZ.) 1" = 10' (VERT.)

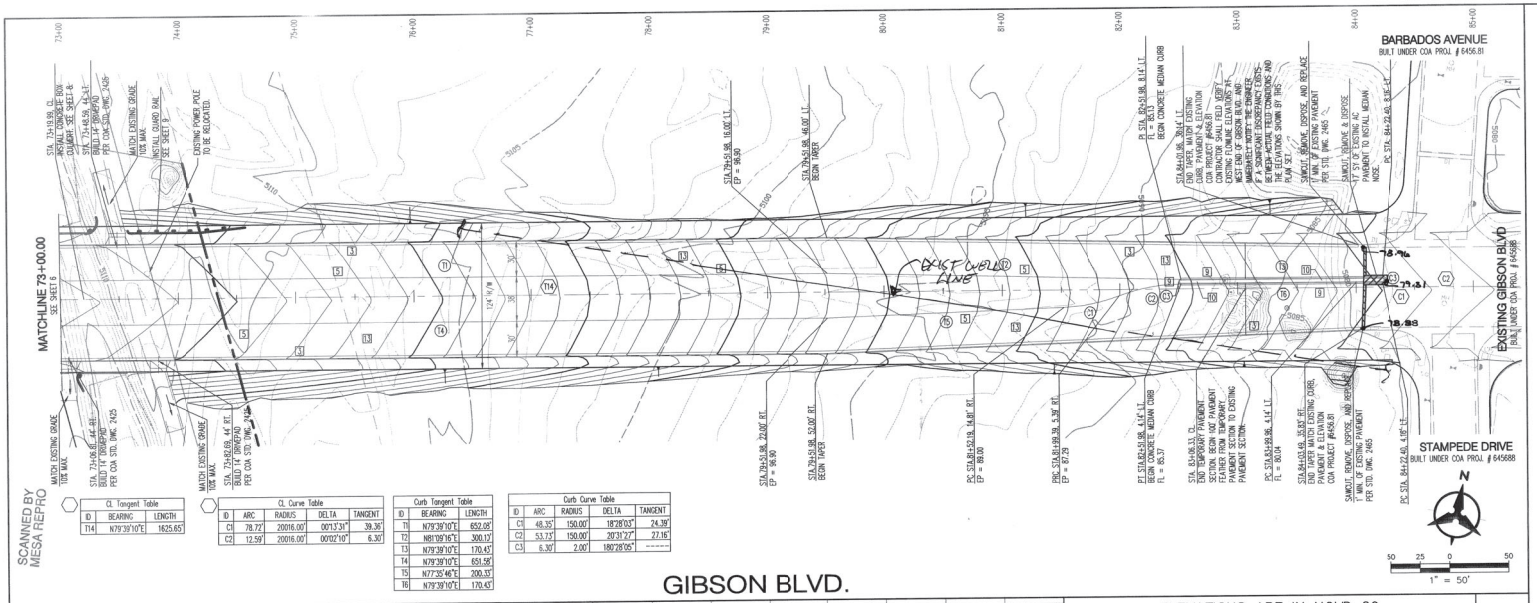

SCANNED BY MESA REPRO

CL Tangent Table		
ID	BEARING	LENGTH
T14	N79°39'10"E	1625.65'

CL Curve Table				
ID	ARC	RADIUS	DELTA	TANGENT
C1	78.72'	20016.00'	00°13'31"	39.36'
C2	12.59'	20016.00'	00°02'10"	6.30'

Curb Tangent Table		
ID	BEARING	LENGTH
T11	N79°39'10"E	652.08'
T12	N81°09'16"E	300.13'
T13	N79°39'10"E	170.43'
T14	N79°39'10"E	651.58'
T15	N77°35'46"E	200.33'
T16	N79°39'10"E	170.43'

Curb Curve Table				
ID	ARC	RADIUS	DELTA	TANGENT
C11	48.35'	150.00'	18°28'03"	24.39'
C12	53.73'	150.00'	20°31'27"	27.16'
C13	6.30'	2.00'	180°28'05"	------

GIBSON BLVD.

ELEVATIONS ARE IN NGVD 29

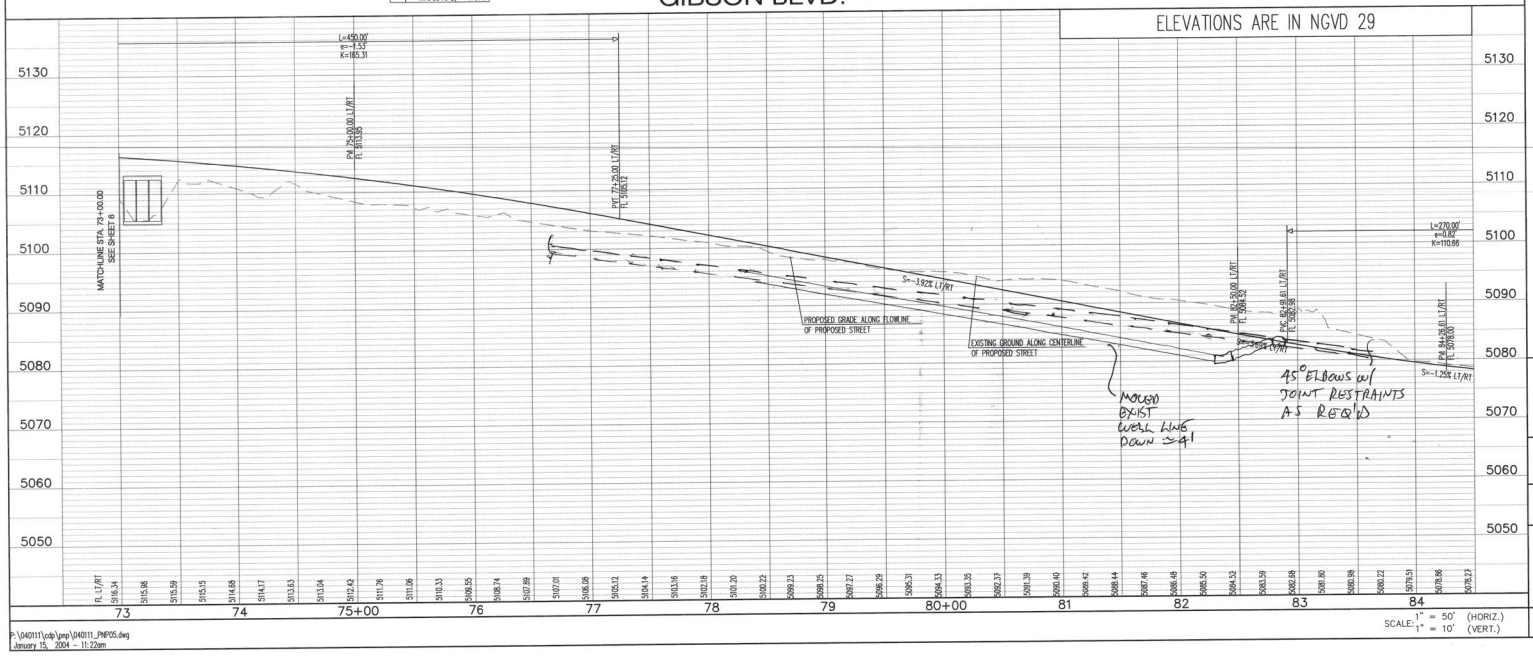

P:\040111\cdp\pmp\040111_PMP05.dwg
January 15, 2004 - 11:22am

NOTES

1. THE CONTRACTOR SHALL FIELD VERIFY ALL EXISTING UTILITY LOCATIONS AND NOTIFY THE ENGINEER IMMEDIATELY OF ANY DISCREPANCIES.
2. ALL CURB RETURN RADII SHALL BE 30' UNLESS OTHERWISE SPECIFIED.
3. ALL CURVE DATA AND DIMENSIONS REFER TO FACE OF CURB UNLESS OTHERWISE SPECIFIED.
4. GRADE ELEVATIONS, WHERE NOTED, ARE FOR FLOWLINE OF CURB UNLESS OTHERWISE SPECIFIED.
5. CONTRACTOR IS TO INSTALL A 4"x 4"x 5' POST AND END AT THE END OF EACH SANITARY SEWER SERVICE.
6. CONTRACTOR IS RESPONSIBLE FOR REPAIR AND/OR REPLACEMENT OF ALL UTILITY CONDUITS AND EXISTING LINES.
7. ANY ADDITIONAL GRADING REQUIRED TO MATCH PROPOSED STREET GRADES SHALL BE INCIDENTAL TO PAVING ITEMS.
8. CONTRACTOR SHALL PROVIDE THE INSPECTORS, (CITY AND PRIVATE) WITH THE PROPOSED HYDROSTATIC TESTING PLAN. THE PLAN MUST BE APPROVED BEFORE TESTING OPERATIONS BEGIN.
9. CONTRACTOR SHALL PARK EQUIPMENT AND VEHICLES AS NOT TO INTERFERE WITH NORMAL ACTIVITIES OF RESIDENTS OR OTHER CONTRACTORS ON SITE.
10. ANY DAMAGE TO THE EXISTING FACILITIES (CURB & GUTTER, PAVEMENT, CONDUITS, LANDSCAPING, UTILITY LINES ETC.) DURING CONSTRUCTION SHALL BE REPLACED AT THE CONTRACTORS' EXPENSE.
11. REMOVAL OF THE EXISTING CURB & GUTTER SHALL BE PER COA STD. DWG. 2415 (SAWCUT ONLY).
12. WHEELCHAIR RAMPS SHALL BE CONSTRUCTED PRIOR TO ACCEPTANCE OF CURB & GUTTER.

KEYED NOTES

* [1] BUILD ARTERIAL PAVEMENT PER ARTERIAL SECTION, SHEET 13.

* [2] INSTALL 6' CONCRETE VALLEY GUTTER PER COA STD. DWG. 2420.

[3] BUILD STD. CURB & GUTTER PER COA STD. DWG. 2415A.

* [4] BUILD EXTRUDED ASPHALT CURB PER COA STD. DWG. 2415B.

[5] EDGE OF PROPOSED ASPHALT.

* [6] BUILD 6' SIDEWALK PER COA STD. DWG. 2430.

* [7] BUILD 8' ASPHALT PATH PER COA STD. DWG. 2415B & DETAIL SHEET 13.

* [8] INSTALL SPECIAL HANDICAP RAMP 'B' SHEET 13.

[9] BUILD MEDIAN CURB & GUTTER PER COA STD. DWG. 2415B.

~~[10] BUILD CONCRETE MEDIAN PAVING PER COA STD DWG. 2408.~~

* [11] INSTALL HANDICAP RAMP PER HANDICAP RAMP DETAIL 'B'. SEE SHEET 13.

* [12] BUILD RESIDENTIAL PAVEMENT PER RESIDENTIAL SECTION, SHEET 13.

[13] BUILD TEMPORARY PAVEMENT PER TEMPORARY SECTION, SHEET 13.

* [14] INSTALL 4" STAMPED CONCRETE 10' BACK FROM MEDIAN NOSE BAJA RED, RUNNING BOND PATTERN.

1 2 3 4 5 6 7 8 9 10 11 12 13 14
26 7227.81 0709

* NOT USED THIS SHEET.

Bohannan ▲ Huston
Courtyard I 7500 Jefferson St. NE Albuquerque, NM 87109-4335
ENGINEERING ▲ SPATIAL DATA ▲ ADVANCED TECHNOLOGIES

CITY OF ALBUQUERQUE
PUBLIC WORKS DEPARTMENT

GIBSON BLVD. IMPROVEMENTS
PAVING PLAN AND PROFILE
GIBSON BLVD. 74+00.00 -

Design Review Committee	City Engineer Approval	Last Design Update	Mo./Day/Yr.	Mo./Day/Yr.
JAN 28 2004 DESIGN REVIEW COMMITTEE	FEB - 4 2004 CITY ENGINEER			

City Project No.	Zone Map No.	Sheet	Of
722781	M-9, N-9	7	27

AS-BUILT INFORMATION
CONTRACTOR Neal Concepts DATE
WORK STAKED BY RLS DATE 10/01
INSPECTORS DATA BY L.C.L. DATE
FIELD VERIFICATIONS BY RLS DATE 8-04
DRAWINGS BY RLS DATE 8-04
MICROFILM INFORMATION
RECORDED BY DATE
NO.

BENCH MARKS
ACS BRASS TABLET STAMPED "TRANS"
Geographic Position (NAD 1927)
N.M. State Plane Coordinates (Central Zone)
X= 354,899.45 Y= 1,471,822.67
Ground-to-Grid Factor = 0.99967921
A.O.C. = -00°16'42"
SLD 1929 Elevation = 5118.43

SURVEY INFORMATION
FIELD NOTES

NO.	BY	DATE

ENGINEER'S SEAL
RICHARD LYNN BELLAR
NEW MEXICO
10098
PROFESSIONAL ENGINEER

No.	Date	REMARKS	By

REVISIONS
DESIGN
Designed By: SJS DATE: 08/03
Drawn By: DH DATE: 08/03
Checked By: SJS DATE: 08/03

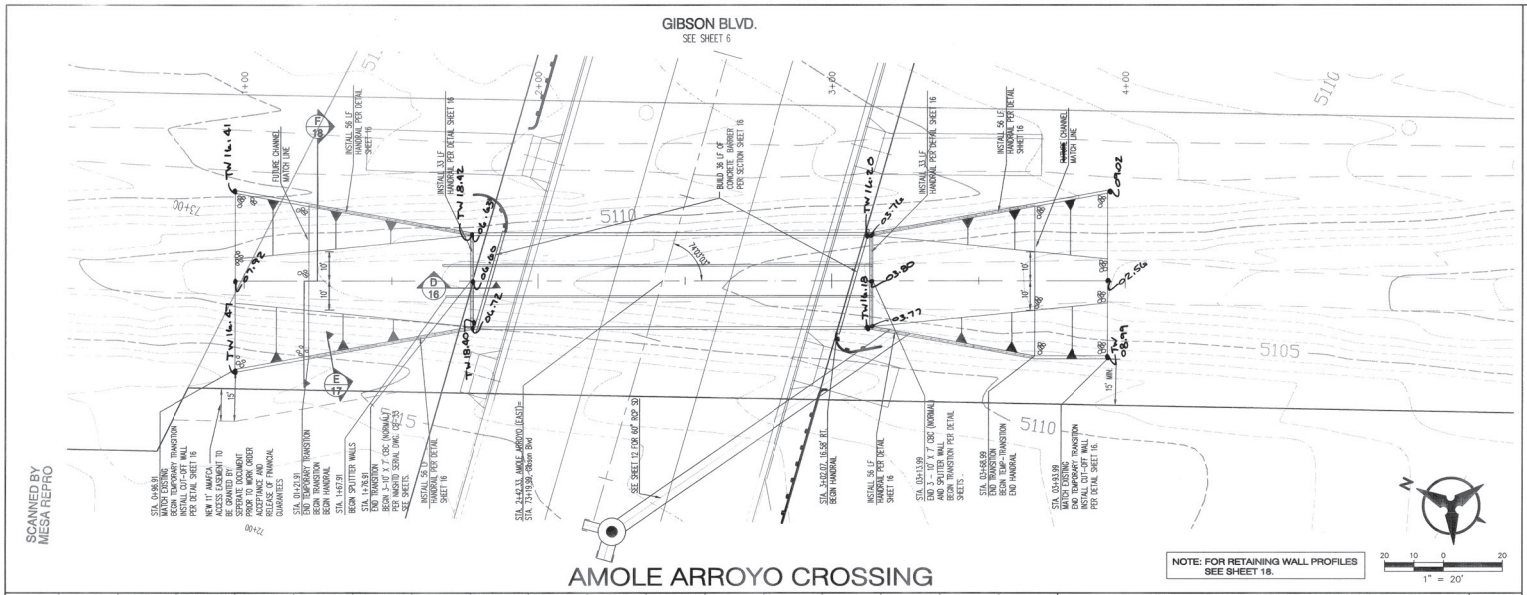

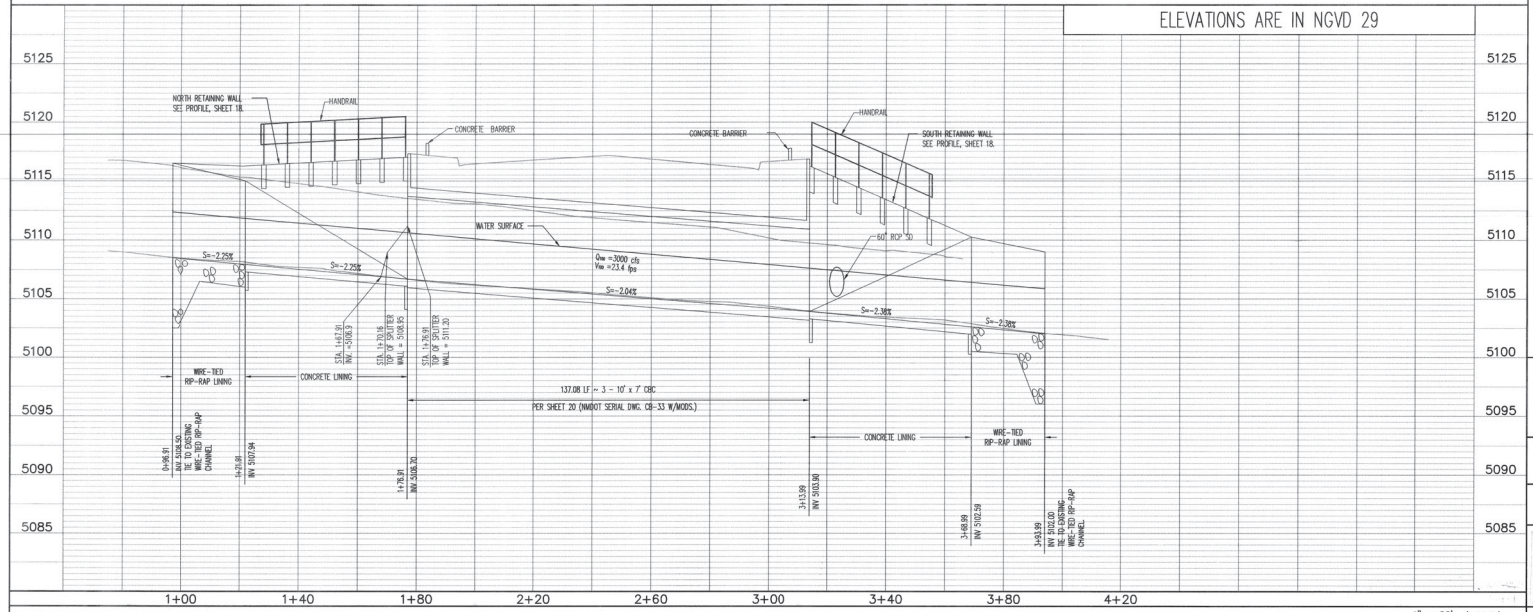

NOTES

1. THE CONTRACTOR SHALL FIELD VERIFY ALL EXISTING UTILITY LOCATIONS AND NOTIFY THE ENGINEER IMMEDIATELY OF ANY DISCREPANCIES.
2. ALL CURB RETURN RADII SHALL BE 30' UNLESS OTHERWISE SPECIFIED.
3. ALL CURVE DATA AND DIMENSIONS REFER TO FACE OF CURB UNLESS OTHERWISE SPECIFIED.
4. GRADE ELEVATIONS, WHERE NOTED, ARE FOR FLOWLINE OF CURB UNLESS OTHERWISE SPECIFIED.
5. CONTRACTOR IS TO INSTALL A 4"x 4"x 5' POST AND END AT THE END OF EACH SANITARY SEWER SERVICE.
6. CONTRACTOR IS RESPONSIBLE FOR REPAIR AND/OR REPLACEMENT OF ALL UTILITY CONDUITS AND EXISTING LINES.
7. ANY ADDITIONAL GRADING REQUIRED TO MATCH PROPOSED STREET GRADES SHALL BE INCIDENTAL TO PAVING ITEMS.
8. CONTRACTOR SHALL PROVIDE THE INSPECTORS, (CITY AND PRIVATE) WITH THE PROPOSED HYDROSTATIC TESTING PLAN. THE PLAN MUST BE APPROVED BEFORE TESTING OPERATIONS BEGIN.
9. CONTRACTOR SHALL PARK EQUIPMENT AND VEHICLES AS NOT TO INTERFERE WITH NORMAL ACTIVITIES OF RESIDENTS OR OTHER CONTRACTORS ON SITE.
10. ANY DAMAGE TO THE EXISTING FACILITIES (CURB & GUTTER, PAVEMENT, CONDUITS, LANDSCAPING, UTILITY LINES ETC.) DURING CONSTRUCTION SHALL BE REPLACED AT THE CONTRACTORS' EXPENSE.
11. REMOVAL OF THE EXISTING CURB & GUTTER SHALL BE PER COA STD. DWG. 2415 (SAWCUT ONLY).
12. WHEELCHAIR RAMPS SHALL BE CONSTRUCTED PRIOR TO ACCEPTANCE OF CURB & GUTTER.

1 2 3 4 5 6 7 8 9 10 11 12 13 14 15
26 7227.81 0805

* NOT USED THIS SHEET.

Bohannan ▲ Huston
Courtyard I 7500 Jefferson St. NE Albuquerque, NM 87109-4335
ENGINEERING ▲ SPATIAL DATA ▲ ADVANCED TECHNOLOGIES

CITY OF ALBUQUERQUE
PUBLIC WORKS DEPARTMENT

GIBSON BLVD. IMPROVEMENTS
PAVING PLAN AND PROFILE
AMOLE ARROYO CROSSING

Design Review Committee	City Engineer Approval	Last Design Update	Mo./Day/Yr.	Mo./Day/Yr.
JAN 28 2004	FEB - 4 2004			

City Project No.	Zone Map No.	Sheet	Of
722781	M-9, N-9	8	27

SCALE: 1" = 20' (HORIZ.) 1" = 5' (VERT.)

P:\040111\cdp\pnp\040111_PNP08.dwg
January 15, 2004 - 11:58am

No.	Date	REMARKS	By
		REVISIONS	

DESIGN
Designed By: SJS DATE: 08/03
Drawn By: DH/BJG DATE: 08/03
Checked By: SJS DATE: 08/03

AS-BUILT INFORMATION
CONTRACTOR New Concepts DATE
STAKED BY AIS DATE
INSPECTED & ACCEPTANCE BY LCC DATE 10/07
FABRICATION BY AIS DATE 8/04
CORRECTED BY AIS DATE 8/04

MICROFILM INFORMATION
RECORDED BY DATE
NO.

BENCH MARKS
ACS BRASS TABLET STAMPED "TRANS"
Geographic Position (NAD 1927)
N.M. State Plane Coordinates (Central Zone)
X= 354,899.45 Y= 1,471,822.67
Ground-to-Grid Factor = 0.99967921
ΔX = -00°16'42"
SLD 1929 Elevation = 5118.43

SURVEY INFORMATION
FIELD NOTES
NO. BY DATE

ENGINEER'S SEAL

SCANNED BY
MESA REPRO

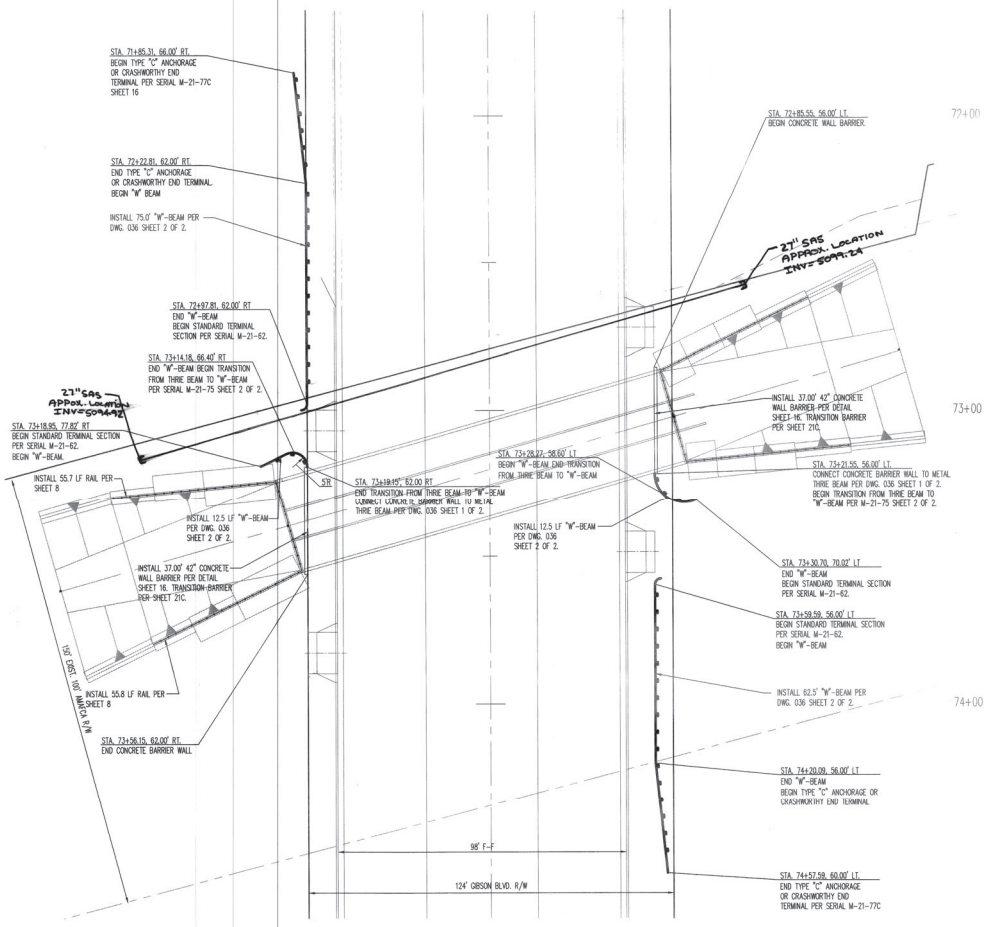

P:\04011\dgn\04011_PM07.dwg
January 15, 2004 - 12:34pm

1 2 3 4 5 6 7 8 9 10 11 12 13 14 15
96 97 98 99 00 01 02 03 04 05

Bohannan ▲ Huston INC
Courtyard I 7500 Jefferson St. NE Albuquerque, NM 87109-4335
ENGINEERING • SPATIAL DATA • ADVANCED TECHNOLOGIES

CITY OF ALBUQUERQUE
PUBLIC WORKS DEPARTMENT

GIBSON BLVD. IMPROVEMENTS
PAVING PLAN
GUARD RAIL AT AMOLE ARROYO CROSSING

Design Review Committee
City Engineer Approval
Mo./Day/Yr.

City Project No. 722781
Zone Map No. M-9, N-9
Last Design Update
Sheet 9 Of 27

APPROVED JAN 2 8 2004 DESIGN REVIEW COMMITTEE
APPROVED FEB - 4 2004 CITY ENGINEER

No.	Date	REMARKS	By
		REVISIONS	
		DESIGN	

Designed By: SJS DATE: 08/03
Drawn By: DH DATE: 08/03
Checked By: SJS DATE: 08/03

ENGINEER'S SEAL

SURVEY INFORMATION
FIELD NOTES

NO.	BY	DATE

BENCH MARKS

ACS BRASS TABLET STAMPED "TRANS"
Geographic Position (NAD 1927)
N.M. State Plane Coordinates (Central Zone)
X= 354,899.45 Y= 1,471,822.67
Ground-to-Grid Factor = 0.99967921
$\Delta\alpha$ = -00°16'42"
SLD 1929 Elevation = 5118.43

AS-BUILT INFORMATION

CONTRACTOR	New Concepts	DATE
WORK STAKED BY	AIS	DATE
INSPECTOR'S ACCEPTANCE BY	LCL	DATE 8/04
FIELD VERIFICATION BY	AIS	DATE 8/04
DRAWINGS CORRECTED BY	AIS	DATE 8/04

MICROFILM INFORMATION

RECORDED BY	DATE
NO.	

1" = 20'
20 10 0 20
N

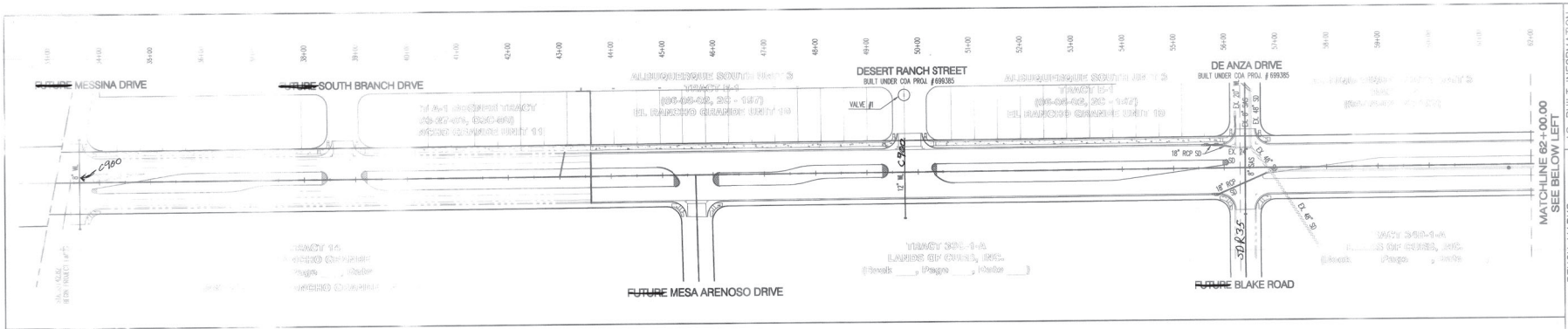

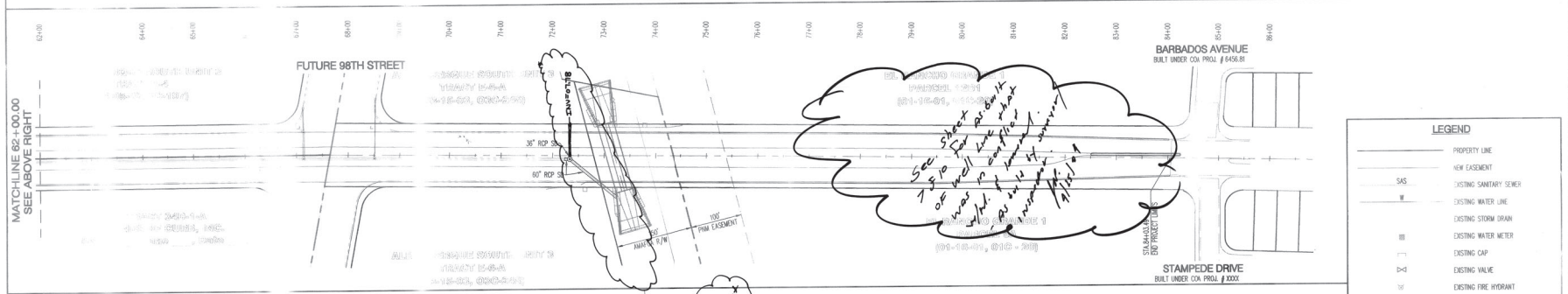

SCANNED BY
MESA REPRO

100 50 0 100
1" = 100'

GENERAL NOTES

1. THE CONTRACTOR SHALL FIELD VERIFY ALL EXISTING UTILITY LOCATIONS AND NOTIFY THE ENGINEER IMMEDIATELY OF ANY DISCREPANCIES.
2. ALL CURVE DATA AND DIMENSIONS ARE CALCULATED FROM CENTERLINE OF PIPE OR MANHOLE. ALL SAS & SD SLOPES ARE CALCULATED TO TRUE PIPE DIMENSIONS FROM INVERT TO INVERT. (PAY ITEMS ARE SHOWN IN PARENTHESIS)
3. GRADE ELEVATIONS, WHERE NOTED, ARE FOR FLOWLINE OF CURB UNLESS OTHERWISE SPECIFIED.
4. CONTRACTOR IS TO INSTALL A 4" X 4' X 5' POST AND END AT THE END OF EACH SANITARY SEWER SERVICE.
5. CONTRACTOR IS RESPONSIBLE FOR REPAIR AND/OR REPLACEMENT OF ALL UTILITY CONDUITS AND EXISTING LINES.
6. CONTRACTOR SHALL PROVIDE THE INSPECTORS WITH THE PROPOSED TESTING PLAN. THE PLAN MUST BE APPROVED BEFORE TESTING OPERATIONS BEGIN.
7. CONTRACTOR SHALL PARK EQUIPMENT AND VEHICLES AS NOT TO INTERFERE WITH NORMAL ACTIVITIES OF RESIDENTS OR OTHER CONTRACTORS ON SITE.
8. ANY DAMAGE TO THE EXISTING FACILITIES (CURB & GUTTER, PAVEMENT, CONDUITS, LANDSCAPING, UTILITY LINES, ETC.) DURING CONSTRUCTION SHALL BE REPLACED AT THE CONTRACTORS' EXPENSE.
9. MH RIMS & CATCH BASIN INLET ELEVATIONS, VALVE BOXES, ARV, FIRE HYDRANT & FLANGE ELEVATIONS ARE APPROXIMATE. CONTRACTOR SHALL FIELD VERIFY AND ADJUST TO FINAL PAVEMENT GRADES.
10. SAS STATIONING FOLLOWS CL OF ROAD UNLESS OTHERWISE NOTED.
11. FLOWLINE ELEVATIONS FOR DROP INLETS ARE PROJECTED FROM FLOWLINE OF STANDARD CURB TO MIDDLE OF DOWNHILL GRATE.
12. ALL WATERLINE APPURTENANCES SHALL USE BLOCKING.
13. FOR STORM DRAIN CONSTRUCTION: ALL RCP JOINTS SHALL NOT BE GROUTED PRIOR TO FINAL INSPECTION. FINAL INSPECTION SHALL DETERMINE WHICH JOINTS ARE TO BE GROUTED FOR FINAL ACCEPTANCE OF THE CONSTRUCTION.
14. ALL EXCAVATION, TRENCHING AND SHORING ACTIVITIES MUST BE CARRIED-OUT IN ACCORDANCE WITH OSHA 29 CFR 1926.650 SUBPART P.

MATERIALS:

SAS LINE: SDR-35 PVC
WATER LINE: C900-PVC

WATER SHUT-OFF PLAN:

FOR CONNECTION	VALVE CLOSED
DESERT RANCH STREET	VALVE # 1

CONTRACTOR WILL BE RESPONSIBLE FOR FLUSHING, DISINFECTING, AND TESTING THE LINES AS REQUIRED BY THE CITY OF ALBUQUERQUE.

WATER SHUT-OFF REQUIREMENTS:

CONTRACTOR WILL BE RESPONSIBLE FOR THE TIMING AND COORDINATION OF THE WATER SHUT-OFF REQUIREMENTS IN CONJUCTION WITH THE COMPLETION OF CONNECTIONS. AT LEAST SEVEN (7) WORKING DAYS PRIOR TO CONSTRUCTION, THE CONTRACTOR SHALL CONTACT THE CITY OF ALBUQUERQUE (857-8200) TO INITIATE IMPLEMENTATION OF THIS WATER SHUT-OFF PLAN. CONTRACTOR SHALL NOT OPERATE VALVES ON THE PROJECT.

LEGEND

- PROPERTY LINE
- NEW EASEMENT
- SAS EXISTING SANITARY SEWER
- W EXISTING WATER LINE
- EXISTING STORM DRAIN
- EXISTING WATER METER
- EXISTING CAP
- EXISTING VALVE
- EXISTING FIRE HYDRANT
- EXISTING SANITARY SEWER MANHOLE
- EXISTING STORM DRAIN
- SAS PROPOSED SANITARY SEWER
- WL PROPOSED WATER LINE
- PROPOSED VALVE
- PROPOSED HYDRANT
- PROPOSED CAP
- PROPOSED WATER METER
- PROPOSED SANITARY SEWER MANHOLE
- PROPOSED STORM DRAIN
- PROPOSED STREET LIGHT

Bohannan ▲ Huston
Courtyard I 7500 Jefferson St. NE Albuquerque, NM 87109-4335
ENGINEERING ▲ SPATIAL DATA ▲ ADVANCED TECHNOLOGIES

CITY OF ALBUQUERQUE
PUBLIC WORKS DEPARTMENT

GIBSON BLVD. IMPROVEMENTS
OVERALL UTILITY PLAN

Design Review Committee	City Engineer Approval	Last Design Update	Mo./Day/Yr.	Mo./Day/Yr.
APPROVED JAN 28 2004 DESIGN REVIEW COMMITTEE	APPROVED FEB - 4 2004 CITY ENGINEER			

City Project No.	Zone Map No.	Sheet	Of
722781	M-9, N-9	10	27

ENGINEER'S SEAL

SURVEY INFORMATION
FIELD NOTES

NO.	BY	DATE

BENCH MARKS
ACS BRASS TABLET STAMPED "TRANS"
Geographic Position (NAD 1927)
N.M. State Plane Coordinates (Central Zone)
X= 354,889.45 Y= 1,471,822.67
Combined Grid Factor = 0.99967921
L.O. = 00°16'42"
SLD 1929 Elevation = 5118.43

AS-BUILT INFORMATION
CONTRACTOR New Concepts DATE
WORK STAKED BY ALS DATE 1/01
INSPECTOR'S FIELD VERIFICATION BY LLL DATE 8/04
DRAWINGS PREPARED BY ALS DATE 8/04
MICROFILM INFORMATION
RECORDED BY DATE
NO.

No.	Date	REMARKS	By
		REVISIONS	
		DESIGN	

Designed By SJS DATE 05/03
Drawn By BJG DATE 05/03
Checked By SJS DATE 05/03

P:\040111\cdb\general\040111_OUTIL.dwg
December 15, 2003 - 4:17pm

1 2 3 4 5 6 7 8 9 10 11 12 13 14 15
26 7227.181 1009

SCANNED BY MESA REPRO

WL Tangent Table		
ID	BEARING	LENGTH
T11	S11°13'38"E	176.53'

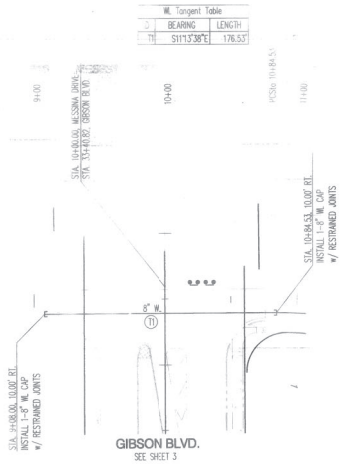

MESSINA DRIVE

WL Tangent Table		
ID	BEARING	LENGTH
T12	S11°19'55"E	157.00'

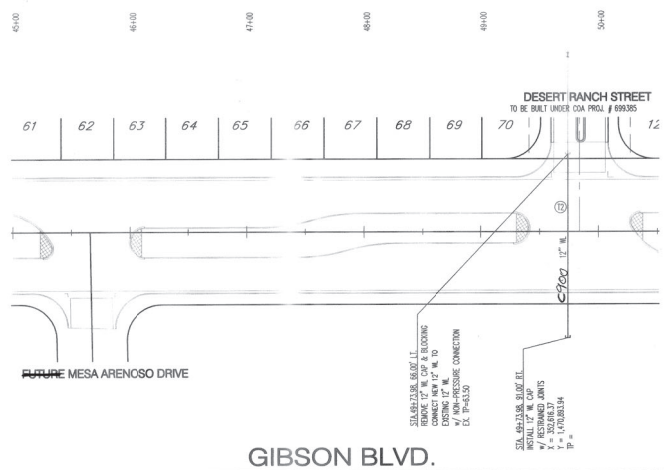

GIBSON BLVD.

ELEVATIONS ARE IN NGVD 29

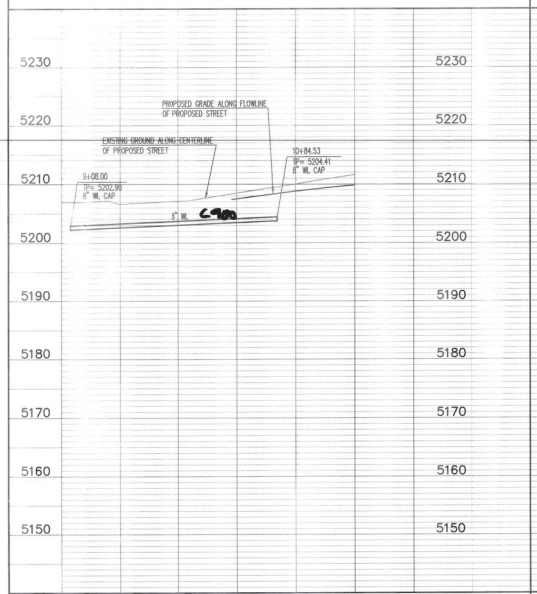

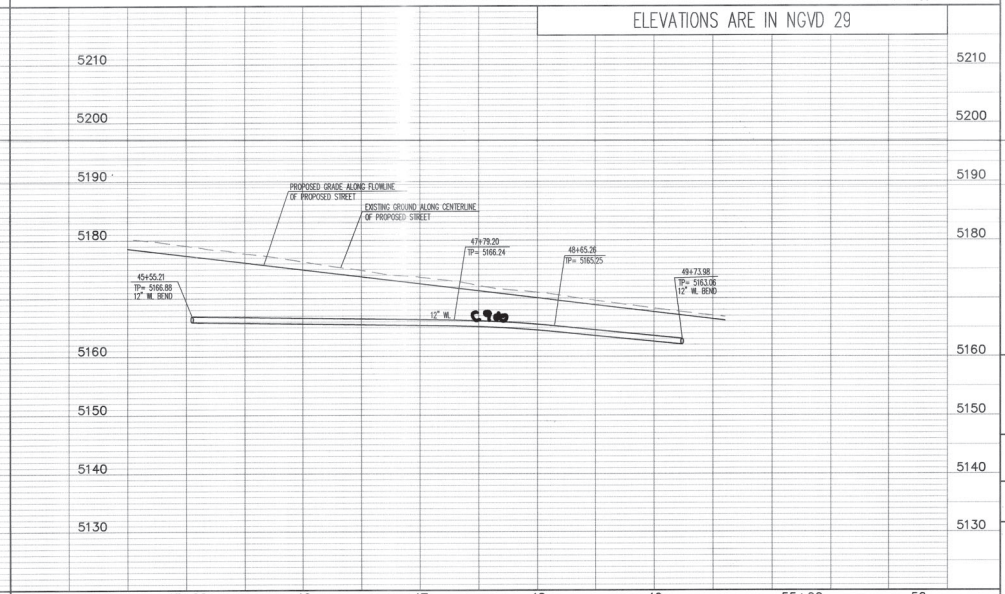

GENERAL NOTES

1. THE CONTRACTOR SHALL FIELD VERIFY ALL EXISTING UTILITY LOCATIONS AND NOTIFY THE ENGINEER IMMEDIATELY OF ANY DISCREPANCIES.
2. ALL CURVE DATA AND DIMENSIONS ARE CALCULATED FROM CENTERLINE OF PIPE OR MANHOLE. ALL SAS & SD SLOPES ARE CALCULATED TO TRUE PIPE DIMENSIONS FROM INVERT TO INVERT. (PAY ITEMS ARE SHOWN IN PARENTHESES)
3. GRADE ELEVATIONS, WHERE NOTED, ARE FOR FLOWLINE OF STANDARD CURB UNLESS OTHERWISE SPECIFIED.
4. CONTRACTOR IS TO INSTALL A 4" X 4" X 5' POST AND END AT THE END OF EACH SANITARY SEWER SERVICE.
5. CONTRACTOR IS RESPONSIBLE FOR REPAIR AND/OR REPLACEMENT OF ALL UTILITY CONDUITS AND EXISTING LINES.
6. CONTRACTOR SHALL PROVIDE THE INSPECTORS WITH THE PROPOSED TESTING PLAN. THE PLAN MUST BE APPROVED BEFORE TESTING OPERATIONS BEGIN.
7. CONTRACTOR SHALL PARK EQUIPMENT AND VEHICLES AS NOT TO INTERFERE WITH NORMAL ACTIVITIES OF RESIDENTS OR OTHER CONTRACTORS ON SITE.
8. ANY DAMAGE TO THE EXISTING FACILITIES (CURB & GUTTER, PAVEMENT, CONDUITS, LANDSCAPING, UTILITY LINES, ETC.) DURING CONSTRUCTION SHALL BE REPLACED AT THE CONTRACTORS' EXPENSE.
9. MH RIMS & CATCH BASIN INLET ELEVATIONS, FIRE HYDRANT & FLANGE ELEVATIONS ARE APPROXIMATE. CONTRACTOR SHALL FIELD VERIFY AND ADJUST TO FINAL PAVEMENT GRADES.
10. SAS STATIONING FOLLOWS CL OF ROAD UNLESS OTHERWISE NOTED.
11. STATIONING OF DROP INLET IS TO MIDDLE OF DOWN HILL GRATE AT FACE OF CURB.
12. FLOWLINE ELEVATIONS FOR DROP INLETS ARE PROJECTED FROM FLOWLINE OF STANDARD CURB TO MIDDLE OF DOWNHILL GRATE.
13. ALL WATERLINE APPURTENANCES SHALL USE RESTRAINED JOINTS.
14. FOR STORM DRAIN CONSTRUCTION: ALL RCP JOINTS SHALL NOT BE GROUTED PRIOR TO FINAL INSPECTION. FINAL INSPECTION SHALL DETERMINE WHICH JOINTS ARE TO BE GROUTED FOR FINAL ACCEPTANCE OF THE CONSTRUCTION.

LEGEND

- DOUBLE WATER METER
- SINGLE WATER METER
- WATER LINE SHUTOFF VALVE
- WATER LINE TEE
- SAS LATERAL
- SAS MANHOLE
- STORM DRAIN MANHOLE
- STORM DRAIN INLET
- PROPOSED FIRE HYDRANT
- EXISTING WATER VALVE
- PROPOSED STREET LIGHT

1 2 3 4 5 6 7 8 9 10 11 12 13 14 15
2 6 7 2 2 7 . 8 1 1 1 0 9

Bohannan ▲ Huston
Courtyard I 7500 Jefferson St. NE Albuquerque, NM 87109-4335
ENGINEERING ▲ SPATIAL DATA ▲ ADVANCED TECHNOLOGIES

CITY OF ALBUQUERQUE
PUBLIC WORKS DEPARTMENT

GIBSON BLVD. IMPROVEMENTS
UTILITY PLAN AND PROFILE
MESSINA DRIVE / GIBSON BLVD.

Design Review Committee	City Engineer Approval	Last Design Update	Mo./Day/Yr.	Mo./Day/Yr.
APPROVED JAN 28 2004 DRB/AR REVIEW DEPARTMENTS	APPROVED FEB - 4 2004 CITY ENGINEER			

AS-BUILT INFORMATION
CONTRACTOR: New Construction
WORK STAKED BY: AIS DATE: 10/04
INSPECTOR'S FIELD DIMENSIONS BY: LCC DATE: 8-04
DRAWINGS CORRECTED BY: AIS DATE: 8-04
DRAWINGS REVIEWED BY: AIS DATE:
MICRO-FILM INFORMATION
RECORDED BY: DATE:
NO.

BENCH MARKS
ACS BRASS TABLET STAMPED "TRANS"
Geographic Position (NAD 1927)
N.M. State Plane Coordinates (Central Zone)
X= 354,899.45 Y= 1,471,822.67
Ground to Grid Factor = 0.999967921
ΔX = -00°16'42"
SLD 1929 Elevation = 5118.43

SURVEY INFORMATION
FIELD NOTES
NO. | BY | DATE

ENGINEER'S SEAL
12/19/03

No.	Date	REMARKS REVISIONS	By

DESIGN
Designed By: SJS DATE: 08/03
Drawn By: BJG DATE: 08/03
Checked By: SJS DATE: 08/03

City Project No. 722781 | Zone Map No. M-9, N-9 | Sheet 11 Of 27

P:\040111\cdp\pnp\040111_UPNP01.dwg
December 15, 2003 - 4:14pm

SCALE: 1" = 50' (HORIZ.) 1" = 10' (VERT.)

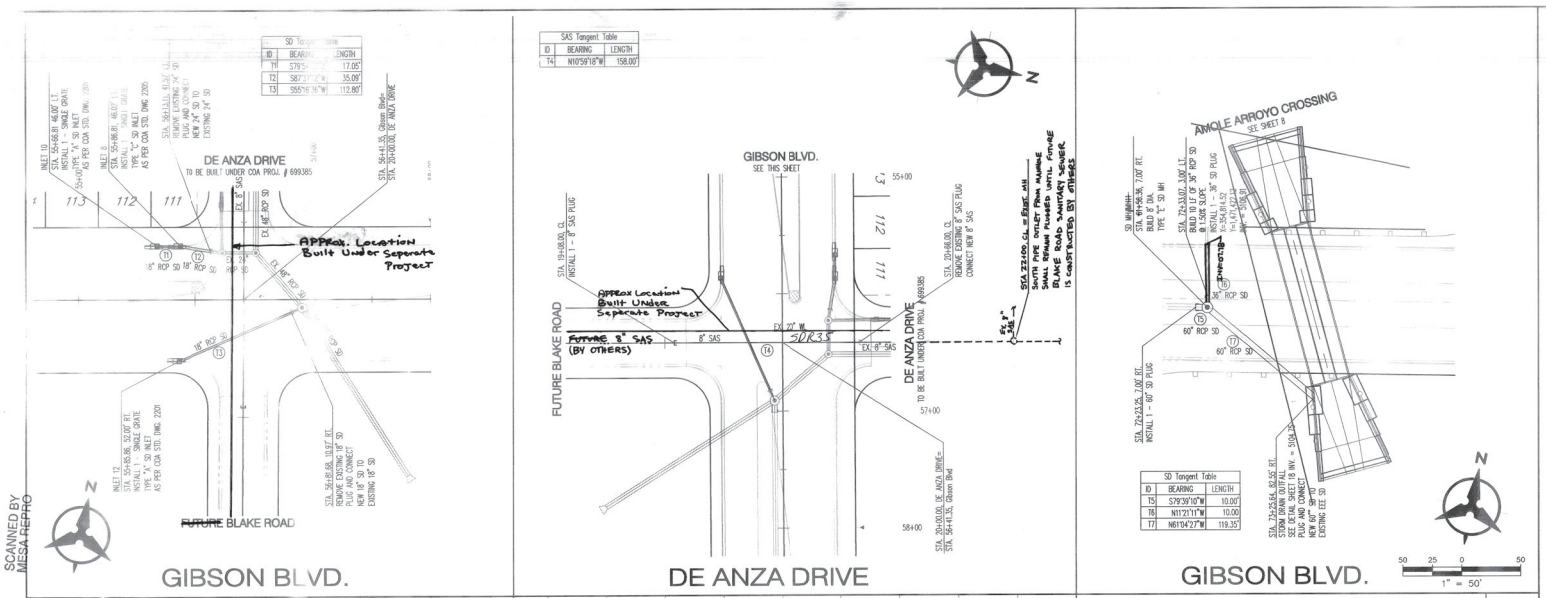

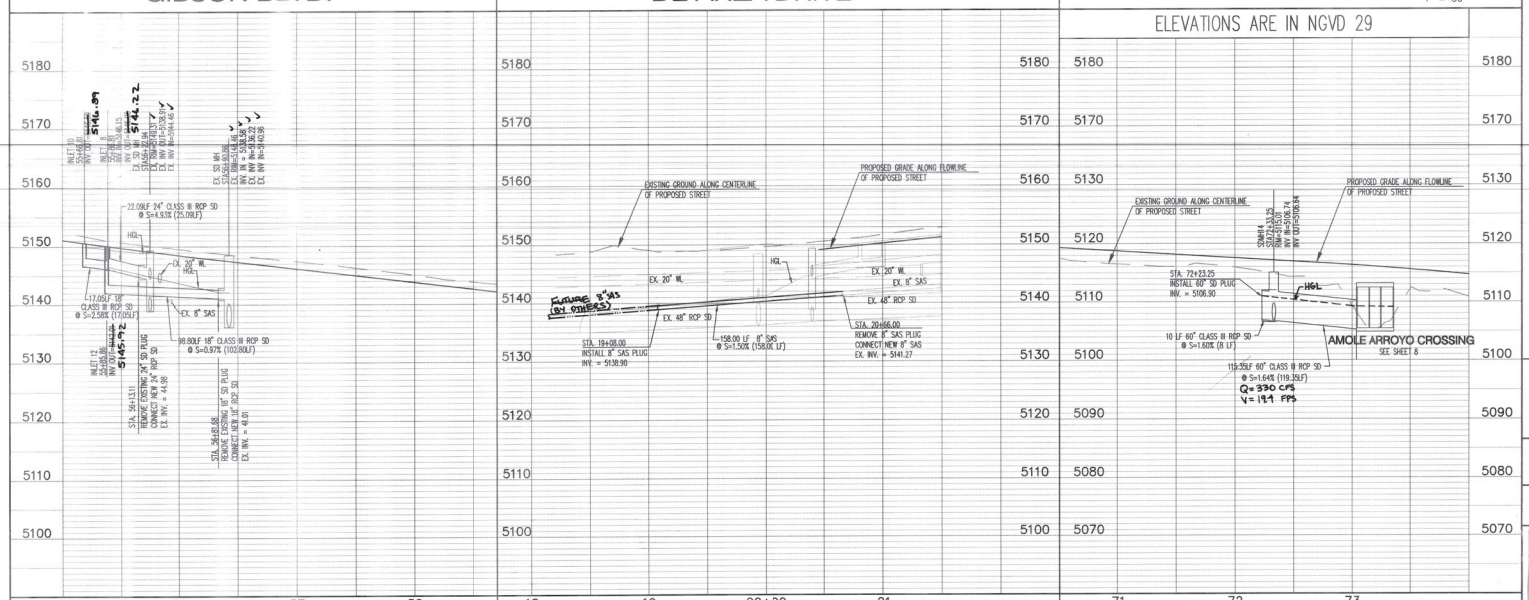

SCANNED BY MESA REPRO

GENERAL NOTES

1. THE CONTRACTOR SHALL FIELD VERIFY ALL EXISTING UTILITY LOCATIONS AND NOTIFY THE ENGINEER IMMEDIATELY OF ANY DISCREPANCIES.
2. ALL CURVE DATA AND DIMENSIONS ARE CALCULATED FROM CENTERLINE OF PIPE OR MANHOLE. ALL SAS & SD SLOPES ARE CALCULATED TO TRUE PIPE DIMENSIONS FROM INVERT TO INVERT. (PAY ITEMS ARE SHOWN IN PARENTHESES)
3. GRADE ELEVATIONS, WHERE NOTED, ARE FOR FLOWLINE OF STANDARD CURB UNLESS OTHERWISE SPECIFIED.
4. CONTRACTOR IS TO INSTALL A 4" X 4" X 5' POST AND END AT THE END OF EACH SANITARY SEWER SERVICE.
5. CONTRACTOR IS RESPONSIBLE FOR REPAIR AND/OR REPLACEMENT OF ALL UTILITY CONDUITS AND EXISTING LINES.
6. CONTRACTOR SHALL PROVIDE THE INSPECTORS WITH THE PROPOSED TESTING PLAN. THE PLAN MUST BE APPROVED BEFORE TESTING OPERATIONS BEGIN.
7. CONTRACTOR SHALL PARK EQUIPMENT AND VEHICLES AS NOT TO INTERFERE WITH NORMAL ACTIVITIES OF RESIDENTS OR OTHER CONTRACTORS ON SITE.
8. ANY DAMAGE TO THE EXISTING FACILITES (CURB & GUTTER, PAVEMENT, CONDUITS, LANDSCAPING, UTILITY LINES, ETC.) DURING CONSTRUCTION SHALL BE REPLACED AT THE CONTRACTORS' EXPENSE.
9. MH RIMS & CATCH BASIN INLET ELEVATIONS, FIRE HYDRANT & FLANGE ELEVATIONS ARE APPROXIMATE. CONTRACTOR SHALL FIELD VERIFY AND ADJUST TO FINAL PAVEMENT GRADES.
10. SAS STATIONING FOLLOWS CL OF ROAD UNLESS OTHERWISE NOTED.
11. STATIONING OF DROP INLET IS TO MIDDLE OF DOWN HILL GRATE AT FACE OF CURB.
12. FLOWLINE ELEVATIONS FOR DROP INLETS ARE PROJECTED FROM FLOWLINE OF STANDARD CURB TO MIDDLE OF DOWNHILL GRATE.
13. ALL WATERLINE APPURTENANCES SHAL. USE RESTRAINED JOINTS.
14. FOR STORM DRAIN CONSTRUCTION: ALL RCP JOINTS SHALL NOT BE GROUTED PRIOR TO FINAL INSPECTION. FINAL INSPECTION SHALL DETERMINE WHICH JOINTS ARE TO BE GROUTED FOR FINAL ACCEPTANCE OF THE CONSTRUCTION.

LEGEND

- DOUBLE WATER METER
- SINGLE WATER METER
- WATER LINE SHUTOFF VALVE
- WATER LINE TEE
- SAS LATERAL
- SAS MANHOLE
- STORM DRAIN MANHOLE
- STORM DRAIN INLET
- PROPOSED FIRE HYDRANT
- EXISTING WATER VALVE
- PROPOSED STREET LIGHT

1 2 3 4 5 6 7 8 9 10 11 12 13 14 15
26 72227.81 1205

Bohannan ▲ Huston

Courtyard I 7500 Jefferson St. NE Albuquerque, NM 87109-4335

ENGINEERING ▲ SPATIAL DATA ▲ ADVANCED TECHNOLOGIES

CITY OF ALBUQUERQUE
PUBLIC WORKS DEPARTMENT

GIBSON BLVD. IMPROVEMENTS
UTILITY PLAN AND PROFILE
GIBSON BLVD./DE ANZA DR.

Design Review Committee	City Engineer Approval	Last Design Update	Mo./Day/Yr.	Mo./Day/Yr.
JAN 28 2004 Design Review Committee	FEB - 4 2004 City Engineer			

City Project No.	Zone Map No.	Sheet	Of
722781	M-9, N-9	12	27

AS-BUILT INFORMATION
CONTRACTOR New Concepts
WORK STAKED BY AIS DATE
INSPECTORS FIELD CHANGES BY J.C. DATE 10/04
AS-BUILTS PLOTTED BY AIS DATE 8/04
CORRECTIONS BY AIS DATE 8/04
MICRO-FILM INFORMATION
RECORDED BY DATE
NO.

BENCH MARKS
ACS BRASS TABLET STAMPED "TRANS" (Geographic Position, (NAD 1927) N.M. State Plane Coordinates (Central Zone) X= 354,899.45 Y= 1,471,822.67 Ground to Grid Factor = 0.999967921 ΔG = -00°16'42" SLD 1929 Elevation = 5118.43

SURVEY INFORMATION
FIELD NOTES
NO. BY DATE

ENGINEER'S SEAL
RICHARD J. TEMPLEMAN NEW MEXICO 14827 PROFESSIONAL ENGINEER
1/14/04

No.	Date	REMARKS	By
		REVISIONS	
		DESIGN	

Designed By: SJS DATE: 08/03
Drawn By: BJG DATE: 08/03
Checked By: SJS DATE: 08/03

SCALE: 1" = 50' (HORIZ.) 1" = 10' (VERT.)

P:\040111\pdp\pnp\040111_UPNP02.dwg
December 15, 2003 - 4:15pm

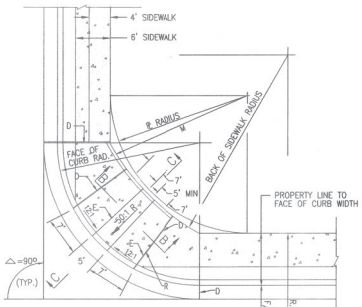

HANDICAP RAMP DETAIL

NOT TO SCALE

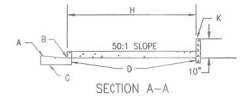

SECTION A–A

△	R RAD	CURB RA	R CURB WIDTH	BACK SW RAD
90°	25'	25'	4'	25'
90°	30'	25'	4'	30'
90°	25'	30'	4'	25'
90°	30'	30'	4'	30'

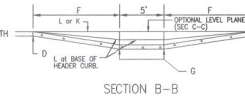

SECTION B–B

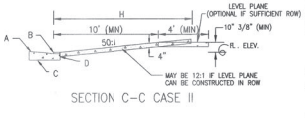

SECTION C–C CASE II

GENERAL NOTES:

1. CURB ACCESS RAMPS ARE NORMALLY TO BE LOCATED AT THE CENTER OF THE RETURN OR AS DIRECTED BY THE CITY TRAFFIC ENGINEER.
2. SURFACE TEXTURE OF CURB ASSESS RAMPS SHALL BE OBTAINED BY HEAVY BROOMING. (TEXTURE DEPTH .035"), TRANSVERSE TO THE SLOPE OF THE RAMP.
3. GUTTER FLOW–LINE PROFILE SHALL BE MAINTAINED THROUGH THE AREA OF THE RAMP. DRAINAGE CATCH BASIN STRUCTURES SHALL NOT BE PLACED IN LINE WITH RAMPS.
4. WIDTH OF SIDEWALK AND RAMP MUST BE MAINTAINED AT A MINIMUM OF 5'–0" THROUGH ENTIRE RAMP LENGTH.

CONSTRUCTION NOTES:

A. SLOPE OF GUTTER DEPENDENT ON REQUIREMENTS FOR VALLEY GUTTER.
B. 1/4" LIP ABOVE FLOW LINE (VERTICAL). SEE STD. DWG 2415
C. CURB & GUTTER. (SEE STD. DWG 2415 – GUTTER AT THE CURB ACCESS RAMP).
D. 1/2" EXPANSION JOINT.
E. PARALLEL LINES – TOP AND BOTTOM OF RAMP.
F. 12:1 SLOPE AT FACE OF CURB. (SEE STD. DWG 2418)
G. CONTRACTION (DUMMY) JOINT.
H. VARIES WITH AVAILABLE R.O.W.
J. VARIABLE.
K. HEADER CURB, SEE DWG. 2415.
L. BACK OF SIDEWALK.
M. BACK OF SIDEWALK RADIUS TO BE ESTABLISHED SO AS TO MAINTAIN A 5'–0" RAMP WIDTH (MINIMUM) OR MORE THROUGHOUT. SEE STD. DWG 2440 (NOTE 5) IF LESS THAN 5'–0" IS AVAILABLE DUE TO UNTIMELY UNRESOLVABLE CONSTRAINTS.
N. 4 1/2" MAX.
P. ANY PRIVATE LANDSCAPING AND OR IRRIGATION SHALL BE RESTORED TO ORIGINAL CONDITION. SHOULD ANY REPRIMATE. IMPROVEMENT NEED TO BE REMOVED, OWNER MUST BE NOTIFIED.
R. 12:1 SLOPE MAXIMUM ON RAMP.

PAVEMENT SECTION NOTES:

1. SOIL NOT HAVING THE MINIMUM R–VALUE OF 50 SHALL BE REMOVED TO A DEPTH OF 2 FEET AND REPLACED BY THE CONTRACTOR WITH SUITABLE MATERIAL OR A PAVEMENT SECTION SHALL BE DESIGNED BY THE CONSULTANT ACCOMMODATING THE EXISTING R–VALUE PER COA STANDARD SPECS.
2. FINISH SURFACES OF SUBGRADE SHALL BE MOISTURE CONTROLLED AT THE COMPACTION MOISTURE RANGE, OR A PRIME COAT APPLIED, AS REQUIRED BY THE ENGINEER UNTIL NEXT/FINAL SURFACING IS COMPLETED. SUBGRADE PREPARATION SHALL BE PERFORMED AFTER ALL SUBSURFACE R/W UTILITIES CONSTRUCTION ARE COMPLETED.

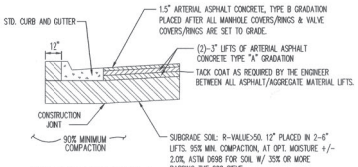

* SEE PWMT SECTION NOTES 1 & 2

ARTERIAL PAVEMENT SECTION - GIBSON BLVD.

NOT TO SCALE

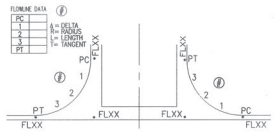

TYPICAL INTERSECTION RETURNS DETAIL

NOT TO SCALE

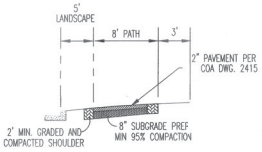

NOTE:
PEDESTRIAN TRAIL HORIZ RADII SHALL BE A MIN. 130' R

8' PEDESTRIAN TRAIL SECTION

NOT TO SCALE

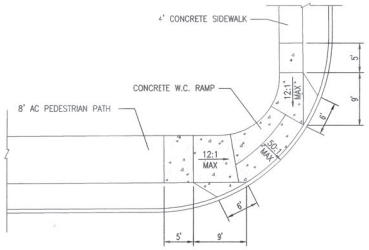

HANDICAP RAMP DETAIL 'B'

N.T.S.

PAVEMENT SECTION NOTES:

1. SOIL NOT HAVING THE MINIMUM R–VALUE OF 50 SHALL BE REMOVED TO A DEPTH OF 2 FEET AND REPLACED BY THE CONTRACTOR WITH SUITABLE MATERIAL OR A PAVEMENT SECTION SHALL BE DESIGNED BY THE CONSULTANT ACCOMMODATING THE EXISTING R–VALUE PER COA STANDARD SPECS.
2. FINISH SURFACES OF SUBGRADE SHALL BE MOISTURE CONTROLLED AT THE COMPACTION MOISTURE RANGE, OR A PRIME COAT APPLIED, AS REQUIRED BY THE ENGINEER UNTIL NEXT/FINAL SURFACING IS COMPLETED. SUBGRADE PREPARATION SHALL BE PERFORMED AFTER ALL SUBSURFACE R/W UTILITIES CONSTRUCTION ARE COMPLETED.

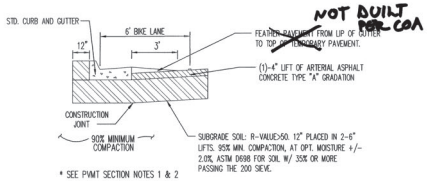

NOT BUILT PER COA

* SEE PWMT SECTION NOTES 1 & 2

~~TEMPORARY~~ PAVEMENT SECTION - GIBSON BLVD.

PERMANENT

NOT TO SCALE

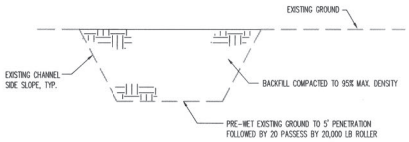

CHANNEL FILL SECTION

NOT TO SCALE

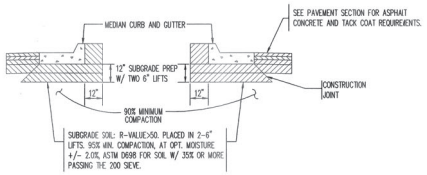

MEDIAN CURB AND GUTTER

NOT TO SCALE

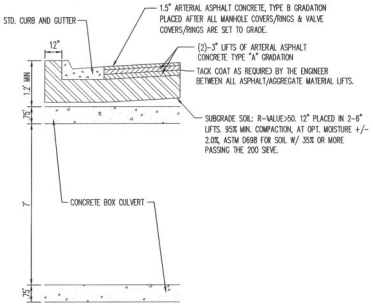

PAVEMENT SECTION - GIBSON BLVD. @ AMOLE ARROYO

NOT TO SCALE

FINISH SURFACES OF SUBGRADE SHALL BE MOISTURE CONTROLLED AT THE COMPACTION MOISTURE RANGE, OR A PRIME COAT APPLIED AS REQUIRED BY THE ENGINEER UNTIL NEXT/ FINAL SURFACING IS COMPLETED. SUBGRADE PREPARATION SHALL BE PERFORMED AFTER ALL SUBSURFACE R/W UTILITIES CONSTRUCTION ARE COMPLETED.

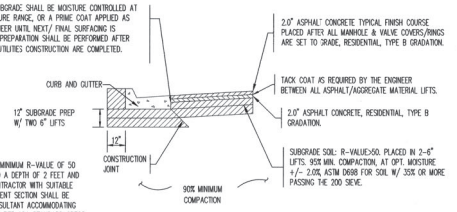

NOTE:
SOIL NOT HAVING THE MINIMUM R–VALUE OF 50 SHALL BE REMOVED TO A DEPTH OF 2 FEET AND REPLACED BY THE CONTRACTOR WITH SUITABLE MATERIAL OR A PAVEMENT SECTION SHALL BE DESIGNED BY THE CONSULTANT ACCOMMODATING THE EXISTING R–VALUE PER COA STANDARD SPECS.

RESIDENTIAL PAVEMENT SECTION 4" ASPHALT

NOT TO SCALE

1 2 3 4 5 6 7 8 9 10 11 12 13 14 15
26 7227 81 1309

AS–BUILT INFORMATION
CONTRACTOR NAME/ADDRESS: New Concepts
DATE
DRAWING BY: AIS
DATE 10/01
ACCEPTANCE BY: LCC
DATE 8/04
REPRODUCTION BY: AIS
DATE 8/04
COMPARED BY: AIS
DATE 8/04
MICROFILM INFORMATION
RECORDED BY
DATE
NO.

BENCH MARKS
ACS BRASS TABLET STAMPED "TRANS"
Geographic Position (NAD 1927)
N.M. State Plane Coordinates (Central Zone)
X= 354,899.45 Y= 1,471,822.67
Ground–to–Grid Factor = 0.99967921
ΔX = –00°16'42"
SLD 1929 Elevation = 5118.43

SURVEY INFORMATION
FIELD NOTES
NO. | BY | DATE

ENGINEER'S SEAL
ASHLEY ANN HUSTON
NEW MEXICO
8/18/03
PROFESSIONAL ENGINEER

No.	Date	REMARKS	By
		REVISIONS	
		DESIGN	

Designed By: SJS DATE: 09/03
Drawn By: BJG DATE: 09/03
Checked By: SJS DATE: 09/03

Bohannan ▲ Huston
Courtyard I 7500 Jefferson St. NE Albuquerque, NM 87109-4335
ENGINEERING ▲ SPATIAL DATA ▲ ADVANCED TECHNOLOGIES

CITY OF ALBUQUERQUE
PUBLIC WORKS DEPARTMENT

GIBSON BLVD. IMPROVEMENTS
MISCELLANEOUS DETAILS

Design Review Committee	City Engineer Approval	Last Design Update	Mo./Day/Yr.	Mo./Day/Yr.
APPROVED JAN 28 2004 DESIGN REVIEW COMMITTEE	APPROVED FEB – 4 2004 CITY ENGINEER			

City Project No.	Zone Map No.	Sheet	Of
722781	M–9, N–9	13	27

P:\040111\cdp\general\040111_MD01.dwg
January 15, 2004 – 12:55pm

SCANNED BY MESA REPRO

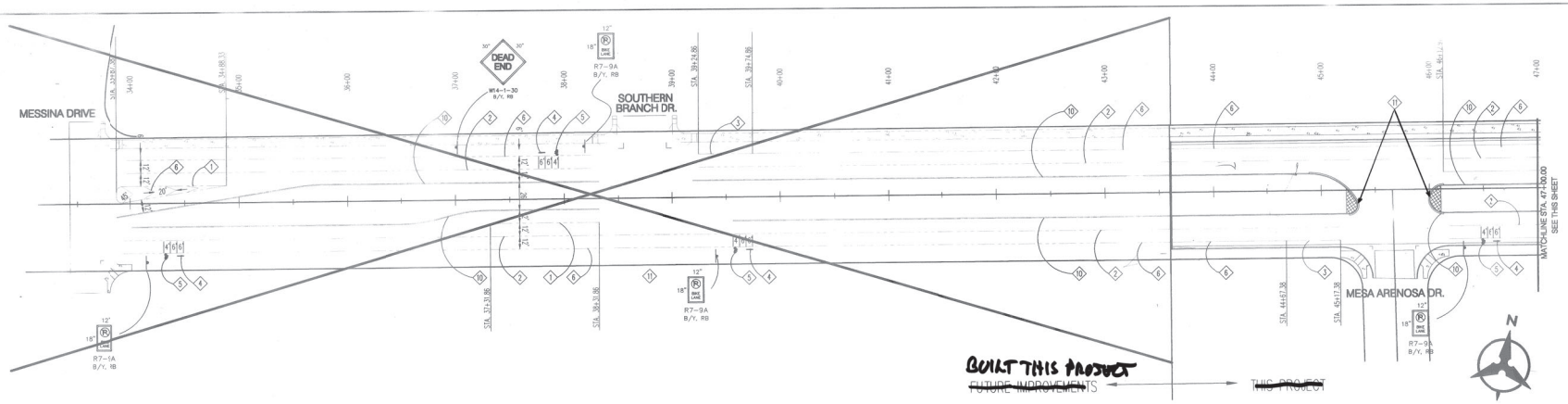

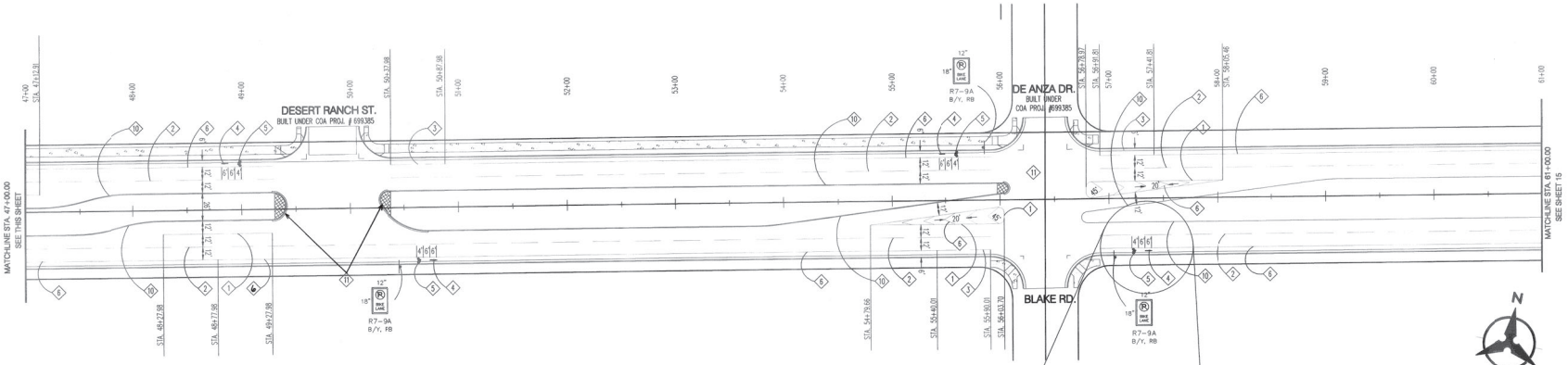

STRIPING LEGEND

1. REFLECTORIZED PLASTIC PAVEMENT MARKING – 4" SOLID WHITE STRIPE.
2. REFLECTORIZED PLASTIC PAVEMENT MARKING – 4" DASHED WHITE STRIPE (10' STRIPE w/ 30' GAP)
3. REFLECTORIZED PLASTIC PAVEMENT MARKING – 6" DASHED WHITE STRIPE (3' STRIPE WITH 7' GAP)
4. PREFORMED PAVEMENT MARKING – BICYCLE ARROW (WHITE)
5. PREFORMED PAVEMENT MARKING – BICYCLE RIDER SYMBOL (WHITE)
6. REFLECTORIZED PLASTIC PAVEMENT MARKING – 6" SOLID WHITE STRIPE.
7. REFLECTORIZED PAINTED PAVEMENT MARKING – 4" DASHED YELLOW STRIPE (3' STRIPE WITH 12' GAP)
8. REFLECTORIZED PLASTIC PAVEMENT MARKING – 24" SOLID WHITE STRIPE.
9. PREFORMED PAVEMENT MARKING – 4' HIGH WORD "STOP"
10. REFLECTORIZED PLASTIC PAVEMENT MARKING – 4" SOLID YELLOW STRIPE.
11. PAINT MEDIAN NOSES YELLOW.

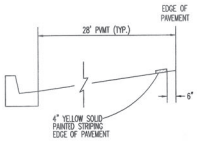

EDGE OF PAVEMENT STRIPING

NOT TO SCALE

KEYED NOTES

1. ERADICATE EXISTING STRIPING BY WATER BLASTING OR SURFACE PLANING OF THE ROADWAY TO A MAXIMUM DEPTH OF .25 INCHES AND FOR A WIDTH EQUAL TO TWO TIMES THE WIDTH OF STRIPE TO BE REMOVED.

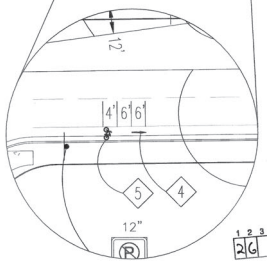

1 2 3 4 5 6 7 8 9 10 11 12 13 14 15
26 72227.811 14009

SCANNED BY MESA FIEPRO

P:\040111\cdp\general\040111_STRIPING_1.dwg
December 15, 2003 – 4:25pm

Bohannan ▲ Huston
Courtyard I 7500 Jefferson St. NE Albuquerque, NM 87109-4335
ENGINEERING ▲ SPATIAL DATA ▲ ADVANCED TECHNOLOGIES

CITY OF ALBUQUERQUE
PUBLIC WORKS DEPARTMENT

GIBSON BLVD. IMPROVEMENTS
STRIPING PLAN

Design Review Committee	City Engineer Approval	Last Design Update	Mo./Day/Yr.	Mo./Day/Yr.
APPROVED JAN 28 2004 Development REVIEW COMMITTEE	APPROVED FEB - 4 2004 CITY ENGINEER			

City Project No.	Zone Map No.	Sheet	Of
722781	M-9, N-9	14	27

AS-BUILT INFORMATION
CONTRACTOR: New Concepts DATE
WORK STAKED BY: AIS DATE 10/01
INSPECTOR'S FIELD DIMENSIONS BY: LLL DATE 8/04
FIELD DIMENSIONS BY: AIS DATE 8/04
DRAWINGS CORRECTED BY: DATE
MICROFILM INFORMATION
RECORDED BY DATE
NO.

BENCH MARKS
ACS BRASS TABLET STAMPED "TRANS"
Geographic Position (NAD 1927)
N.M. State Plane Coordinates (Central Zone)
X= 354,899.45 Y= 1,471,822.67
Ground-to-Grid Factor = 0.99967921
A.C. = -00°16'42"
SLD 1929 Elevation = 5118.43

SURVEY INFORMATION
FIELD NOTES

NO.	BY	DATE

ENGINEER'S SEAL

No.	Date	REMARKS	By
		REVISIONS	
		DESIGN	

Designed By: SJS DATE: 09/03
Drawn By: BJG DATE: 09/03
Checked By: SJS DATE: 09/03

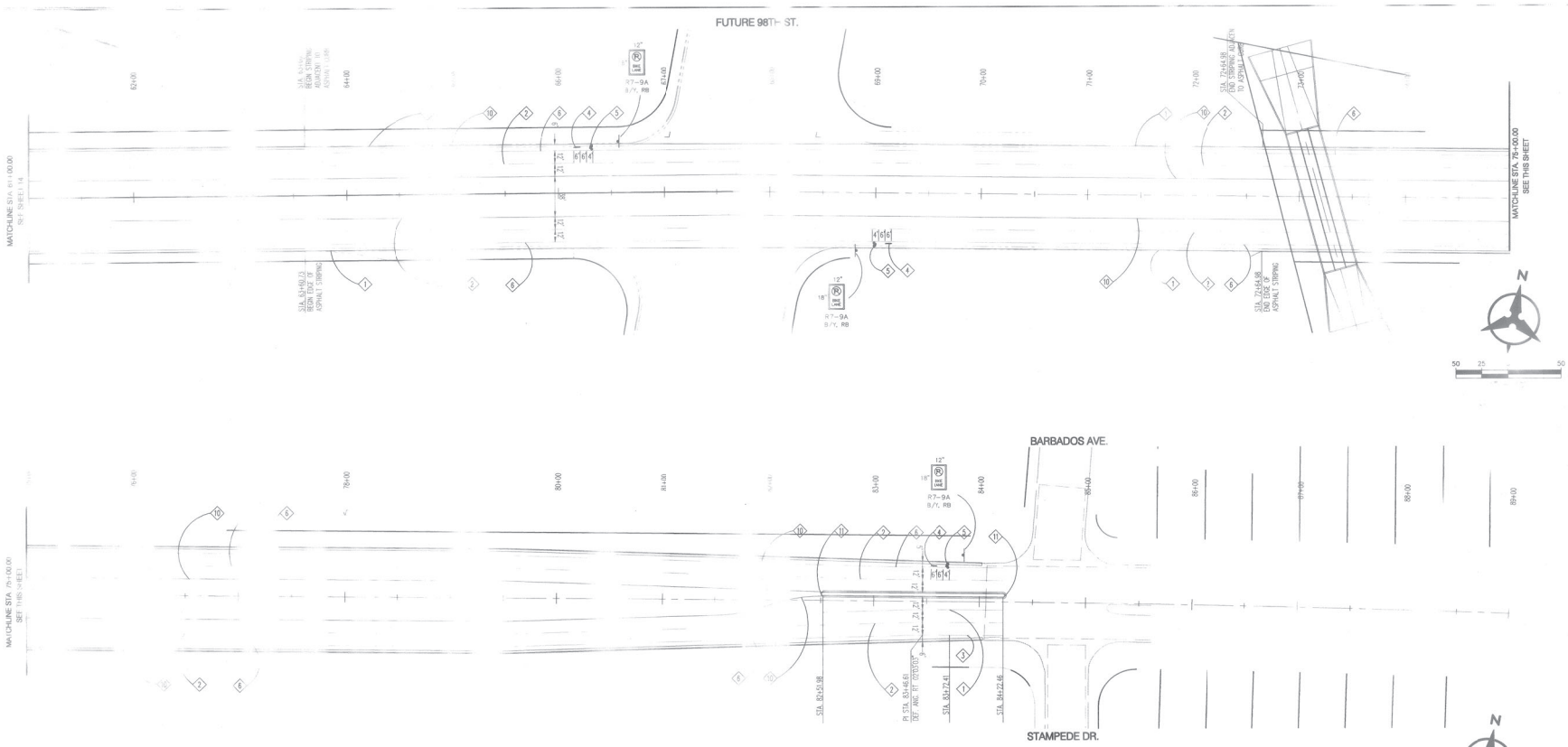

STRIPING LEGEND

1. REFLECTORIZED PLASTIC PAVEMENT MARKING – 4" SOLID WHITE STRIPE
2. REFLECTORIZED PLASTIC PAVEMENT MARKING – 4" DASHED WHITE STRIPE (10' STRIPE w/ 30' GAP)
3. REFLECTORIZED PLASTIC PAVEMENT MARKING – 6" DASHED WHITE STRIPE (3' STRIPE WITH 7' GAP)
4. PREFORMED PAVEMENT MARKING – BICYCLE ARROW
5. PREFORMED PAVEMENT MARKING – BICYCLE RIDER SYMBOL
6. REFLECTORIZED PLASTIC PAVEMENT MARKING – 6" SOLID WHITE STRIPE.
7. REFLECTORIZED PAINTED PAVEMENT MARKING – 4" DASHED YELLOW STRIPE (3' STRIPE WITH 12' GAP)
8. REFLECTORIZED PLASTIC PAVEMENT MARKING – 24" SOLID WHITE STRIPE.
9. PREFORMED PAVEMENT MARKING – 4' HIGH WORD "STOP"
10. REFLECTORIZED PLASTIC PAVEMENT MARKING – 4" SOLID YELLOW STRIPE.
11. PAINT MEDIAN NOSES YELLOW

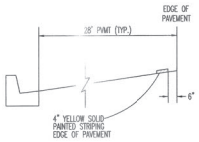

EDGE OF PAVEMENT STRIPING

NOT TO SCALE

KEYED NOTES

1. ERADICATE EXISTING STRIPING BY WATER BLASTING OR SURFACE PLANING OF THE ROADWAY TO A MAXIMUM DEPTH OF .25 INCHES AND FOR A WIDTH EQUAL TO TWO TIMES THE WIDTH OF STRIPE TO BE REMOVED.

1 2 3 4 5 6 7 8 9 10 11 12 13 14 15

SCANNED BY MESA REPRO

P:\040111\cdp\general\040111_STRIPING_2.dwg
December 15, 2003 – 4:28pm

Bohannan ▲ Huston

Courtyard I 7500 Jefferson St. NE Albuquerque, NM 87109-4335

ENGINEERING ▲ SPATIAL DATA ▲ ADVANCED TECHNOLOGIES

CITY OF ALBUQUERQUE
PUBLIC WORKS DEPARTMENT

GIBSON BLVD. IMPROVEMENTS
STRIPING PLAN

Design Review Committee	City Engineer Approval	Last Design Update	Mo./Day/Yr.	Mo./Day/Yr.
APPROVED JAN 28 2004 DEVELOPMENT REVIEW COMMITTEE	APPROVED FEB - 4 2004 CITY ENGINEER			

City Project No.	Zone Map No.	Sheet	Of
722781	M-9, N-9	15	27

No.	Date	REMARKS	By
		REVISIONS	
		DESIGN	

Designed By: SJS DATE: 09/03
Drawn By: BJG DATE: 09/03
Checked By: SJS DATE: 09/03

AS-BUILT INFORMATION
CONTRACTOR New Concepts
WORK STAKED BY AIS DATE 10/4
INSPECTOR'S FIELD CHANGE BY LCL DATE 3/04
INSPECTOR'S FIELD VERIFICATION BY AIS DATE 3/04
CORRECTIONS BY AIS DATE
RECORDED BY DATE
NO.

BENCH MARKS
ACS BRASS TABLET STAMPED "TRANS"
Geographic Position (NAD 1927)
N.M. State Plane Coordinates (Central Zone)
X= 354,599.43 Y= 1,471,322.87
Ground-to-Grid Factor = 0.999967921
A.G. = -00°16'42"
SLD 1929 Elevation: 5118.43

SURVEY INFORMATION
FIELD NOTES
NO. BY DATE

ENGINEER'S SEAL

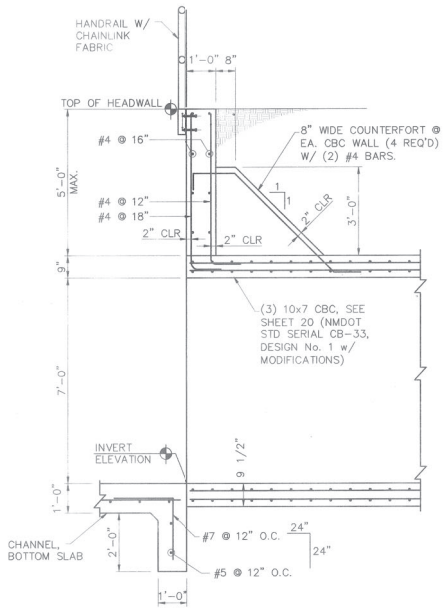

D 16 SECTION, CBC HEADWALL & TYPICAL CUTOFF WALL

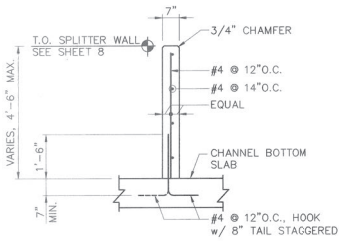

E 16 SPLITTER WALL SECTION
SCALE: N.T.S.

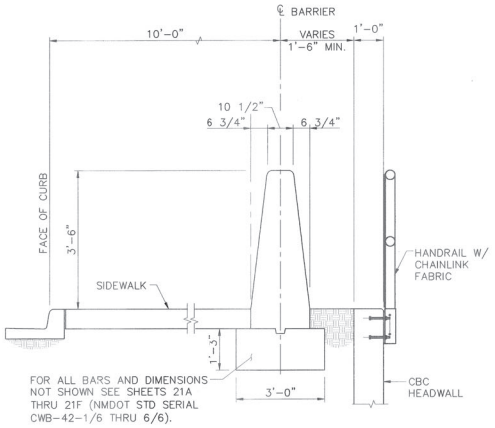

PEDESTRAIN RAILING TYPICAL SECTION
SCALE: N.T.S.

NOTES FOR CAST IN PLACE CBC AND HEADWALLS

1. WORKMANSHIP AND MATERIALS SHALL CONFORM TO THE CITY OF ALBUQUERQUE STANDARD SPECIFICATIONS FOR PUBLIC WORKS CONSTRUCTION, LATEST EDITION.
2. STRUCTURAL CAST-IN-PLACE CONCRETE: STRUCTURAL CONCRETE SHALL BE IN ACCORDANCE WITH SECTION 101, TABLE 101.C, HYDRAULIC STRUCTURES, Fc'=4000 PSI.
3. REINFORCING STEEL: STEEL REINFORCEMENT AND PLACEMENT SHALL BE IN ACCORDANCE WITH SECTION 102-STEEL REINFORCEMENT, AND SHALL CONFORM TO ASTM A615, GRADE 60. ALL LAP SPLICES SHALL BE AS SHOWN ON THE PLANS.
4. SUBGRADE PREPARATION: EXPOSED SOILS SHOULD BE SCARIFIED TO A DEPTH OF 8", MOISTURE CONDITIONED TO A NEAR OPTIMUM (3%) MOISTURE CONTENT TO A MINIMUM DEPTH OF FIVE FEET. COMPACT TO A MINIMUM OF 95% OF MAXIMUM DENSITY AS DETERMINED BY ASTM D-1557. THE CONTRACTOR SHALL BE LIMITED TO THE USE OF HAND OPERATED COMPACTION EQUIPMENT WITHIN A ZONE OF FIVE FEET HORIZONTALLY FROM THE BACK OF THE WALL. CONTRACTOR SHALL REFERENCE REPORT NO. 03-1-276, DATED 12-17-03, PREPARED BY VINYARD & ASSOCIATES, INC.
5. THE CONTRACTOR SHALL BE RESPONSIBLE FOR PROVIDING SAFE AND ADEQUATE SHORING FOR ALL PARTS OF THE WALLS AND ANY ADJACENT STRUCTURES DURING CONSTRUCTION , AS WELL AS WORKER SAFETY AND COMPLIANCE WITH OSHA OR OTHER AGENCY SAFETY GUIDELINES.
6. THE CONTRACTOR SHALL BE RESPONSIBLE FOR CODE ADMINISTRATION APPROVAL AND FEES ASSOCIATED WITH IT.
7. THE CONTRACTOR SHALL BE RESPONSIBLE TO SEE THAT ALL REBAR IS PROPERLY ALIGNED AND TIED IN PLACE BEFORE PLACING CONCRETE. ALL STEEL SHALL BE ACCURATELY LOCATED AND SECURED IN PLACE SO THAT IT REMAINS IN POSITION DURING THE PLACEMENT OF THE CONCRETE. ANY REBAR IMPROPERLY INSTALLED SHALL BE CORRECTED AT NO ADDITIONAL COST TO THE OWNER.
8. THE CONTRACTOR SHALL CLEAN ALL CONSTRUCTION DEBRIS FROM THE AREA.
9. CONCRETE USED IN WINGWALLS AND CHANNEL TRANSITIONS SHALL BE TINTED WITH 1 LB "SAN DIEGO BUFF" PER SACK OF CEMENT.

DESIGN DATA

SOIL:

EFP (ACTIVE)	=34 PCF
EFP (PASSIVE)	=400 PCF
SOIL UNIT WEIGHT	=128 PCF
ALLOWABLE BEARING PRESSURE	=1500 PSF
COEFFICIENT OF FRICTION FOR SLIDING	=0.40

LIVE LOAD:
2'-0" SOIL SURCHARGE

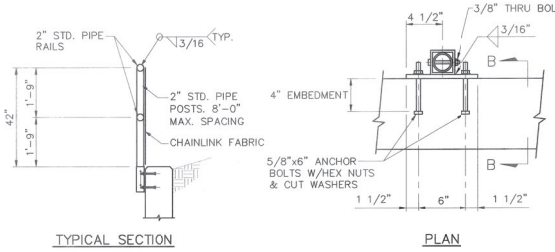

TYPICAL HANDRAIL DETAILS
SCALE: N.T.S.

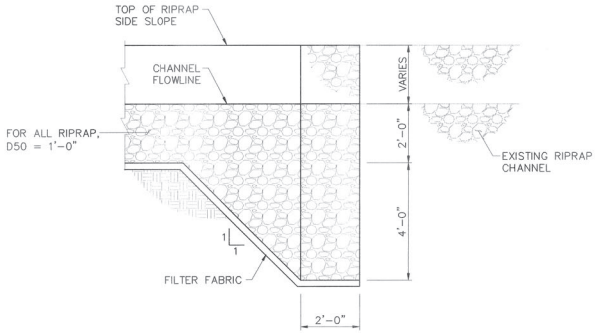

NOTE:
PROVIDE FULL WIDTH CUTOFF WALL ACROSS BOTTOM AND ALONG THE SIDE SLOPES OF CHANNEL @ ENDS.

WIRE TIED RIPRAP CUTOFF WALL SECTION
N.T.S.

1 2 3 4 5 6 7 8 9 10 11 12 13 14 15
26 722281 1609

AS-BUILT INFORMATION
CONTRACTOR: New Camex DATE
WORK STAKED BY: AIS DATE 10/01
INSPECTOR'S ACCEPTANCE BY: LLC DATE 10/01
FIELD VERIFICATIONS BY: AIS DATE 8/04
DRAWINGS CORRECTED BY: AIS DATE 8/04
MICRO-FILM INFORMATION
RECORDED BY: DATE
NO.

BENCH MARK'S
ACS BRASS TABLET STAMPED "TRANS"
Geographic Position (NAD 1927)
N.M. State Plane Coordinates (Central Zone)
X= 354,899.45, Y= 1,471,822.67
Ground-to-Grid Factor = 0.99967921
DELT ALPHA= -00°16'42"
SLD 1929 Elevation = 5118.43

SURVEY INFORMATION
FIELD NOTES
NO. BY DATE

ENGINEER'S SEAL
JOHN M. BEFFORT NEW MEXICO 10016 REGISTERED PROFESSIONAL ENGINEER
1-15-04

No.	Date	REMARKS	By
		REVISIONS	
		DESIGN	

Designed By: SMM DATE: 01/04
Drawn By: ED DATE: 01/04
Checked By: DWB DATE: 01/04

Bohannan ▲ Huston
Courtyard I 7500 Jefferson St. NE Albuquerque, NM 87109-4335
ENGINEERING ▲ SPATIAL DATA ▲ ADVANCED TECHNOLOGIES

CITY OF ALBUQUERQUE
PUBLIC WORKS DEPARTMENT

GIBSON BLVD. IMPROVEMENTS
MISCELLANEOUS SECTIONS AND DETAILS
AMOLE ARROYO CROSSING

Design Review Committee: JAN 28 2004 DESIGN REVIEW COMMITTEE
City Engineer Approval: APPROVED FEB - 4 2004 CITY ENGINEER
Last Design Update: Mo./Day/Yr. Mo./Day/Yr.

City Project No. 722281 | Zone Map No. M-9, N-9 | Sheet 16 Of 27

SCANNED BY MESA REPRO

P:\040111\structl\pcad\040111-DTLS.DWG
January 15, 2004 - 1:12pm

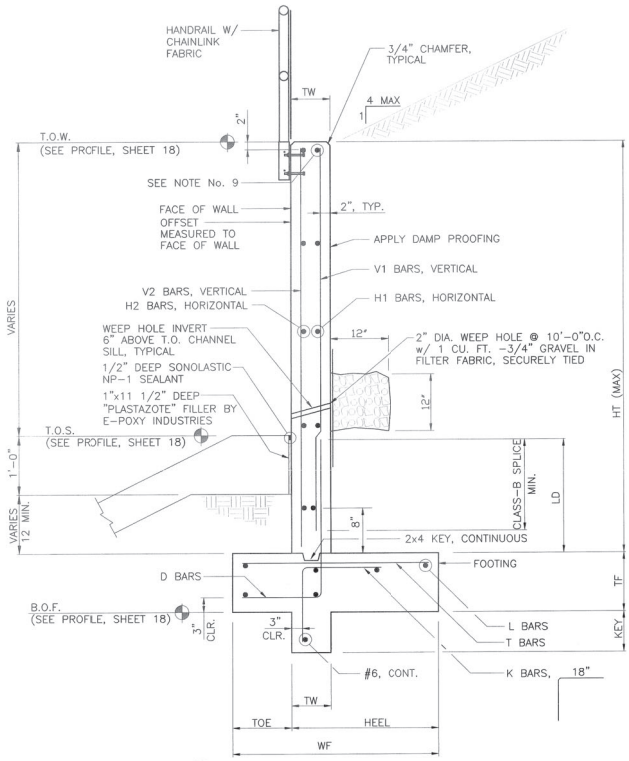

E
17
TYPICAL WALL SECTION
NO SCALE

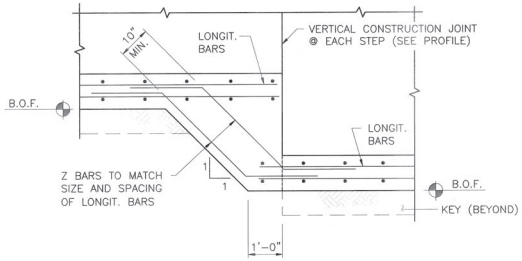

STEP FOOTING DETAIL
NO SCALE

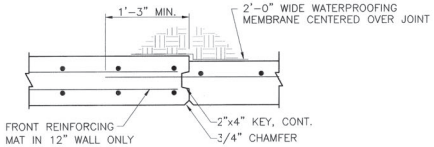

VERTICAL CONSTRUCTION JOINT PLAN DETAIL
NO SCALE

NOTES FOR CAST IN PLACE RETAINING WALLS

1. WORKMANSHIP AND MATERIALS SHALL CONFORM TO THE CITY OF ALBUQUERQUE STANDARD SPECIFICATIONS FOR PUBLIC WORKS CONSTRUCTION, LATEST EDITION.
2. STRUCTURAL CAST-IN-PLACE CONCRETE: STRUCTURAL CONCRETE SHALL BE IN ACCORDANCE WITH SECTION 101, TABLE 101.C, HYDRAULIC STRUCTURES, Fc'=4000 PSI.
3. REINFORCING STEEL: STEEL REINFORCEMENT AND PLACEMENT SHALL BE IN ACCORDANCE WITH SECTION 102-STEEL REINFORCEMENT, AND SHALL CONFORM TO ASTM A615, GRADE 60. ALL LAP SPLICES SHALL BE AS SHOWN ON THE PLANS.
4. SUBGRADE PREPARATION: EXPOSED SOILS SHOULD BE SCARIFIED TO A DEPTH OF 8", MOISTURE CONDITIONED TO A NEAR OPTIMUM (3%) MOISTURE CONTENT TO A MINIMUM DEPTH OF FIVE FEET. COMPACT TO A MINIMUM OF 95% OF MAXIMUM DENSITY AS DETERMINED BY ASTM D-1557. THE CONTRACTOR SHALL BE LIMITED TO THE USE OF HAND OPERATED COMPACTION EQUIPMENT WITHIN A ZONE OF FIVE FEET HORIZONTALLY FROM THE BACK OF THE WALL. CONTRACTOR SHALL REFERENCE REPORT NO. 03-1-276, DATED 12-17-03, PREPARED BY VINYARD & ASSOCIATES, INC.
5. THE CONTRACTOR SHALL BE RESPONSIBLE FOR PROVIDING SAFE AND ADEQUATE SHORING FOR ALL PARTS OF THE WALL AND ANY ADJACENT STRUCTURES DURING CONSTRUCTION , AS WELL AS WORKER SAFETY AND COMPLIANCE WITH OSHA OR OTHER AGENCY SAFETY GUIDELINES.
6. VERTICAL CONSTRUCTION JOINTS SHALL BE PLACED AS SHOWN ON THE PROFILE, SHEET 18.
7. THE CONTRACTOR SHALL NOTIFY THE ENGINEER PRIOR TO THE CONCRETE FOOTING PLACEMENT, FOR THE INSPECTION OF COMPACTION UNDER THE FOOTING, FOOTING DEPTH AND WIDTH, THE WALL STEEL SPACING. FINAL INSPECTION OF THE FOOTING AND WALL WILL BE REQUIRED.
8. THE CONTRACTOR SHALL BE RESPONSIBLE FOR CODE ADMINISTRATION APPROVAL AND FEES ASSOCIATED WITH IT.
9. THE CONTRACTOR SHALL BE RESPONSIBLE TO SEE THAT ALL REBAR IS PROPERLY ALIGNED AND TIED IN PLACE BEFORE PLACING CONCRETE. ALL STEEL SHALL BE ACCURATELY LOCATED AND SECURED IN PLACE SO THAT IT REMAINS IN POSITION DURING THE PLACEMENT OF THE CONCRETE. ANY REBAR IMPROPERLY INSTALLED SHALL BE CORRECTED AT NO ADDITIONAL COST TO THE OWNER.
10. THE CONTRACTOR SHALL CLEAN ALL CONSTRUCTION DEBRIS FROM THE AREA.

DESIGN LOADS

EFP (ACTIVE)	=34 PCF
EFP (PASSIVE)	=400 PCF
SOIL UNIT WEIGHT	=128 PCF
ALLOWABLE BEARING PRESSURE	=2000 PSF
COEFFICIENT OF FRICTION FOR SLIDING	=0.40

LAP SPLICES-CLASS B

BAR	LENGTH (IN)
4	18
5	22
6	26
7	43
8	54
9	66

DIMENSIONS

WALL TYPE	HT (MAX)	TF (IN)	TW (IN)	TOE (IN)	HEEL (IN)	WF (IN)	KEY (IN)	LD (IN)
A	4'-6"	12	8	16	26	42	–	20
B	6'-4"	12	8	24	28	52	–	24
C	10'-8"	18	10	28	92	120	–	45
D	15'-0"	24	12	69	81	150	15	68

REINFORCING

WALL TYPE	D		V1		H1		V2		H2		L		T		K	
	SIZE	SPACE	SIZE	SPACE	SIZE	SPACE	SIZE	SPACE	SIZE	SPACE	SIZE	NO. REQ'D	SIZE	SPACE	SIZE	SPACE
A	4	18	4	18	4	12	–	–	–	–	5	4	4	18	–	–
B	4	9	4	18	4	12	–	–	–	–	5	4	5	18	–	–
C	6	9	6	18	5	12	–	–	–	–	6	9	6	12	–	–
D	9	7	7	14	5	18	4	18	4	18	6	15	6	10	6	20

WALL SCHEDULE

1 2 3 4 5 6 7 8 9 10 11 12 13 14 15
26 72281 8 1 17 09

AS-BUILT INFORMATION
CONTRACTOR: New Construction DATE
STAKED BY: Als DATE 10/01
INSPECTOR'S FIELD VERIFICATION BY: LCC DATE 8/04
DRAWINGS CORRECTED BY: Als DATE 8/04
RECORDED BY: MICRO-FILM INFORMATION DATE
NO.

BENCH MARKS
ACS BRASS TABLET STAMPED "TRANS"
Geographic Position (NAD 1927)
N.M. State Plane Coordinates (Central Zone)
X= 354,899.45, Y= 1,471,822.67
Ground-to-Grid Factor = 0.99967921
DELT ALPHA= -00°16'42"
SLD 1929 Elevation = 5118.43

SURVEY INFORMATION
FIELD NOTES
NO. | BY | DATE

ENGINEER'S SEAL
STATE OF NEW MEXICO
10016
REGISTERED PROFESSIONAL ENGINEER

No.	Date	REMARKS	By
		REVISIONS	

Designed By: SMM DATE 01/04
Drawn By: ED DATE 01/04
Checked By: DMB DATE 01/04

Bohannan ▲ Huston
Courtyard I 7500 Jefferson St. NE Albuquerque, NM 87109-4335
ENGINEERING ▲ SPATIAL DATA ▲ ADVANCED TECHNOLOGIES

CITY OF ALBUQUERQUE
PUBLIC WORKS DEPARTMENT

GIBSON BLVD. IMPROVEMENTS
RETAINING WALL SECTIONS AND DETAILS
AMOLE ARROYO CROSSING

Design Review Committee: APPROVED JAN 28 2004 DESIGN REVIEW COMMITTEE
City Engineer Approval: APPROVED FEB - 4 2004 CITY ENGINEER
Last Design Update | Mo./Day/Yr. | Mo./Day/Yr.

City Project No.	Zone Map No.	Sheet	Of
722281	M-9, N-9	17	27

SCANNED BY MEGA REPRO

P:\040111\struct\acad\040111-RETWALLS.DWG
January 15, 2004 - 1:10pm

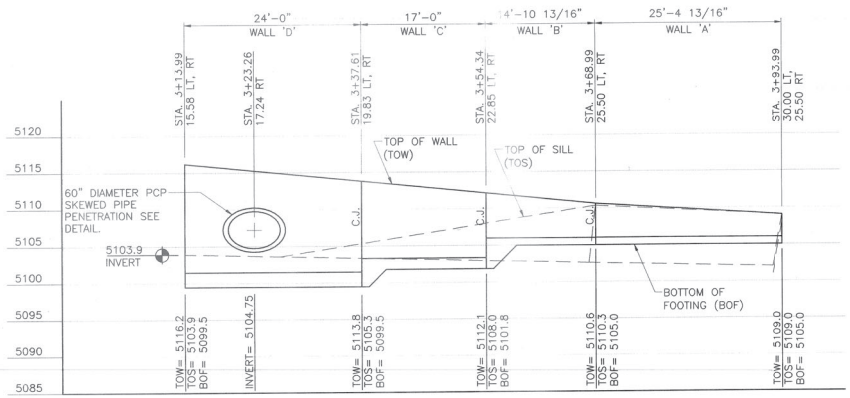

SOUTH WALL PROFILE

SCALE: 1/8"=1'-0"

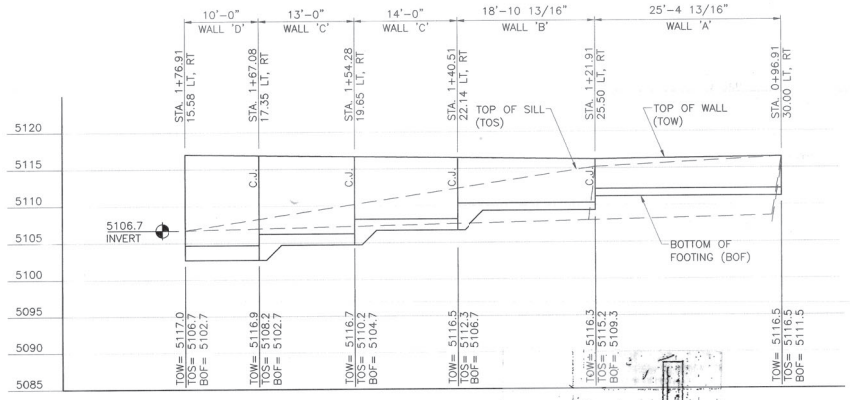

NORTH WALL PROFILE

SCALE: 1/8"=1'-0"

NOTE:
"C.J." = CONSTRUCTION JOINT.
SEE SHEET 17 FOR DETAILS.

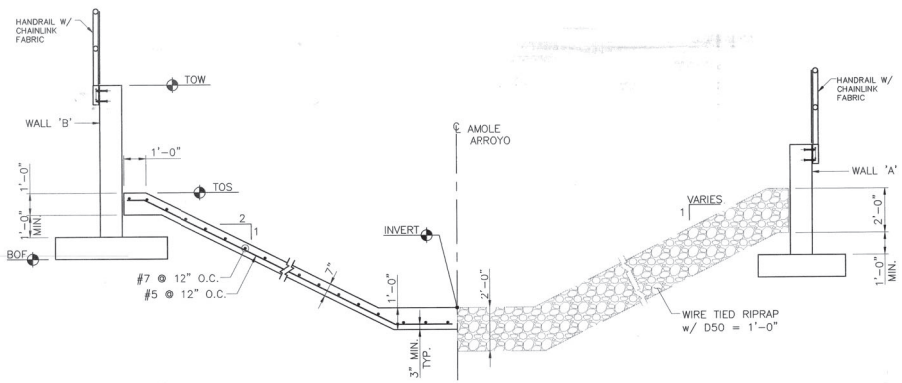

F / 18 SECTION
NTS

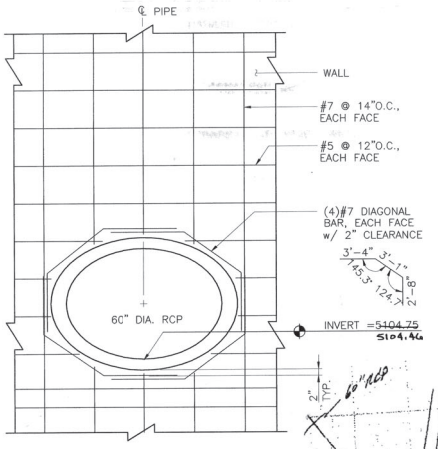

WALL PIPE PENETRATION DETAIL

NO SCALE

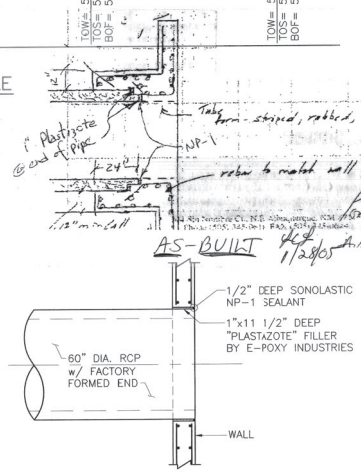

WALL PIPE PENETRATION SECTION

NO SCALE

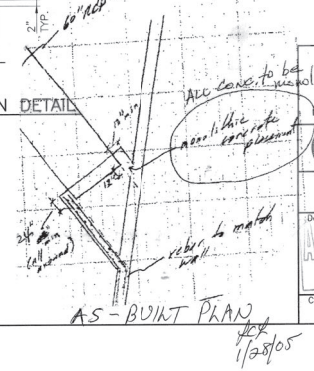

AS-BUILT PLAN

AS-BUILT

AS-BUILT INFORMATION
CONTRACTOR Nat Constr DATE
STAKED BY AIS DATE 10/01
ACCEPTANCE BY LLC
FIELD VERIFICATION BY AIS DATE 8/04
DRAWINGS CORRECTED BY AIS DATE 8/04
MICRO-FILM INFORMATION
RECORDED BY DATE
NO.

BENCH MARKS
ACS BRASS TABLET STAMPED "TRANS"
Geographic Position (NAD 1927)
N.M. State Plane Coordinates (Central Zone)
X= 354,899.45, Y= 1,471,822.67
Ground-to-Grid Factor = 0.99967921
DELT ALPHA= -0016'42"
SLD 1929 Elevation = 5118.43

SURVEY INFORMATION
FIELD NOTES
BY DATE
1/31/04

ENGINEER'S SEAL
DONALD M. BEZZI NEW MEXICO 10016 REGISTERED PROFESSIONAL ENGINEER

No.	Date	REMARKS	By
		REVISIONS	
		DESIGN	

Designed By: SMM DATE: 01/04
Drawn By: ED DATE: 01/04
Checked By: DMB DATE: 01/04

Bohannan ▲ Huston
Courtyard I 7500 Jefferson St. NE Albuquerque, NM 87109-4335
ENGINEERING ▲ SPATIAL DATA ▲ ADVANCED TECHNOLOGIES

CITY OF ALBUQUERQUE
PUBLIC WORKS DEPARTMENT

GIBSON BLVD. IMPROVEMENTS
RETAINING WALL SECTIONS AND DETAILS
AMOLE ARROYO CROSSING

Design Review Committee: JAN 28 2004 DESIGN REVIEW COMMITTEE
City Engineer Approval: FEB - 4 2004 CITY ENGINEER
Last Design Update Mo./Day/Yr. Mo./Day/Yr.

City Project No. 7 722281 | Zone Map No. M-9, N-9 | Sheet 18 Of 27

SCANNED BY MESA REPRO

P:\040111\struct\acad\040111-W-PROFILES.DWG
January 15, 2004 - 1:13pm

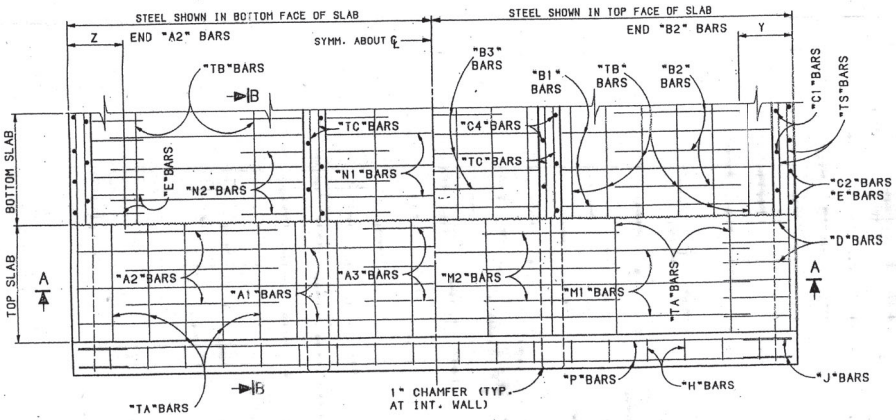

PART PLAN AND PART SECTION C-C

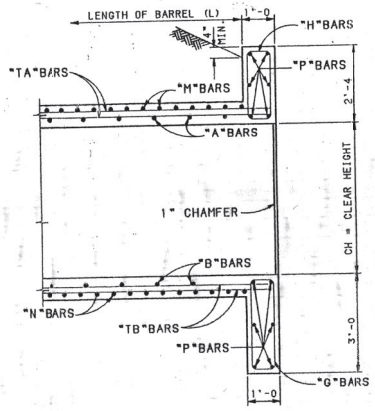

PART SECTION B-B

GENERAL NOTES

1. ALL CONCRETE SHALL BE CLASS "A". CHAMFER ALL THE EXPOSED EDGES 3/4".
2. ALL REINFORCING STEEL TO BE DEFORMED BARS, CONFORMING TO AASHTO M-31, GRADE 60. ALL DIMENSIONS REFER TO THE CENTERLINE OF BAR.
3. WHEN NECESSARY, "T" BARS MAY BE SPLICED BY LAPPING AT LEAST 20 BAR DIAMETERS. PAY WEIGHT FOR REINFORCING STEEL DOES NOT INCLUDE SPLICES. THE COST OF THE SPLICE MATERIAL IS TO BE INCLUDED IN THE UNIT PRICE BID FOR REINFORCING STEEL.
4. VOLUME OF CONCRETE = (L) x (CONCRETE QUANTITY/LIN. FT.) PLUS CONCRETE AT ENDS.
5. WEIGHT OF REINFORCING STEEL = (L) x (WEIGHT OF REINF./LIN.FT.) PLUS WEIGHT AT ENDS.
6. PLACE "TA" BARS ON "A" BARS AND "TB" BARS UNDER "B" BARS, SPACED AS SHOWN IN THE TABLE. THE REMAINING "TA" BARS, AND "TB" BARS ARE TO BE PLACED ADJACENT TO THE "D", "E", "M", AND "N" BARS AS INDICATED IN "SECTION A-A", AT 2'-0 MAX.
7. PLACE "TS" BARS NEXT TO "C1" BARS, SPACED AS SHOWN IN THE TABLE, THE REMAINING "TS" BARS SHALL BE PLACED IN SIDEWALL NEXT TO "C2", "D", AND "E" BARS. WHEN "C1" BARS ARE NOT REQUIRED, PLACE ALL "TS" BARS NEXT TO "C2", "D", AND "E" BARS.
8. PLACE "A1", "A3", "B1", "B3", "M1", AND "N1" BARS SYMMETRICAL TO THE CENTERLINE OF THE BOX. PLACE "M2" AND "N2" BARS SYMMETRICAL TO THE CENTERLINE OF THE WALLS.
9. "COVER" IS HEIGHT OF FILL FROM TOP OF THE BOX TO THE FINISHED GRADE.

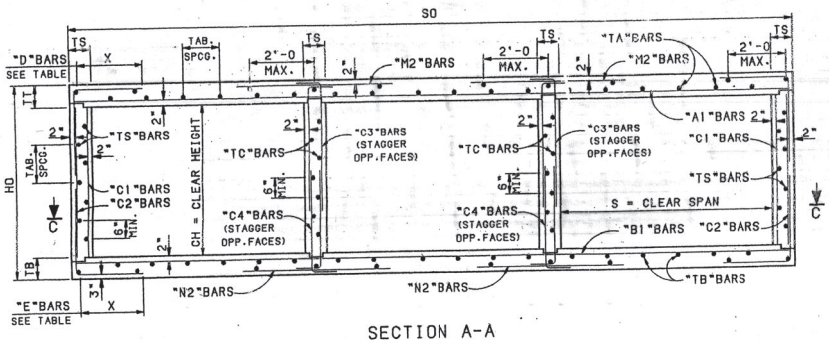

SECTION A-A

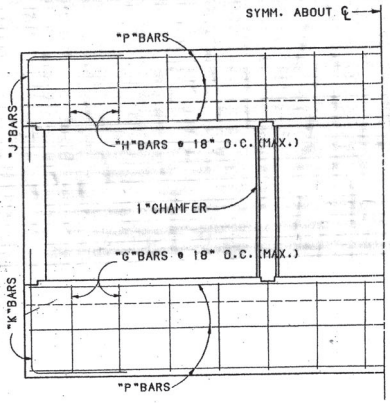

PART END ELEVATION

DESIGN DATA

DESIGN ACCORDING TO A.A.S.H.O. SPECIFICATIONS, 1957.
LIVE LOAD: H20-S16-44 & INTERSTATE ALTERNATE LOADING
WEIGHT OF FILL ON TOP OF BOX: 84#/CU.FT.
HORIZONTAL EARTH PRESSURE: 30#/CU.FT., 2' SURCHARGE
DESIGN STRESSES: $f'c$ = 3000 psi, fc = 1200 psi, fs = 20,000 psi, n = 10.

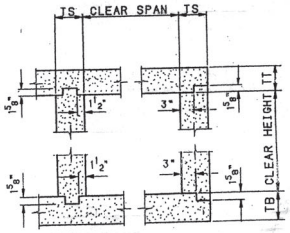

CONSTRUCTION JOINT DETAIL

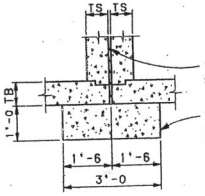

½" PREFORMED BITUMINOUS JOINT FILLER SHALL BE USED BETWEEN ADJACENT UNITS AND IT SHALL EXTEND BETWEEN BARRELS, PARAPETS, AND CUT-OFF WALLS.

THE FOUNDATION BLOCK SHALL BE PLACED IN NEAT EXCAVATION AND EXTENDED FOR THE ENTIRE LENGTH OF BARREL UNDER JOINT BETWEEN UNITS. PLACE ONE LAYER OF TAR PAPER OVER THE ENTIRE TOP SURFACE OF THE FOUNDATION BLOCK. CONCRETE QUANTITY = 0.111 CU. YDS. PER LIN. FT. OF BLOCK.

JOINT DETAIL FOR MULTIPLE UNIT BOXES

NO.	DESCRIPTION	DATE	BY
6			
5			
4			
3			
2			
1	REVISED NOTE #2	6-8-94	PH

REVISIONS (OR CHANGE NOTICES)

NEW MEXICO STATE HIGHWAY AND TRANSPORTATION DEPARTMENT

CONCRETE BOX CULVERT BARRELS
TRIPLE OPENING - NORMAL
ALL DESIGNS

GENERAL DATA

722781

LAYOUT BY / DRAWN BY / CHECKED BY — APPROVAL RECOMMENDED: BRIDGE ENGINEER — 11/94 DATE — APPROVED: BRIDGE ENGINEER — 2-2-94 DATE

SERIAL CB-33 — SHEET 1 OF 5

1 2 3 4 5 6 7 8 9 10 11 12 13 14 15
2 6 7 2 2 7 . 8 1 1 9 0 9

DESIGNED BY: H.T. 10/60 CHECKED BY: S.J.M. 10/93 PLOT DATE: 10/28/93
DETAILED BY: J.A.K. 10/93 CHECKED BY: R.A. 10/93

SCANNED BY MESA REPRO

BRIDGE#1/STANDARDS/BRIDGE/STANDARDS#16

PRJ. NO. 722781

N. M. P. ..... SHEET .....

SHEET 19 OF 27

CLEAR SPAN	CLEAR HEIGHT	DIMENSIONS TT	TS	TB	SO	HO	Y	Z	QUANTITIES PER L.F. OF BARREL: REINFORCING STEEL POUNDS PER L.F.	CONCRETE CU. YDS. PER L.F.	AT ONE END ✱: REINFORCING STEEL POUNDS	CONCRETE CU. YDS.
4	2	7"	6"	6½"	14'-0	3'-1½	----	----	115.8	0.731	337	2.91
	3	7"	6"	6½"	14'-0	4'-1½	----	----	122.8	0.806	347	2.99
	4	7"	6"	6½"	14'-0	5'-1½	----	----	124.3	0.880	355	3.06
6	2	7½"	6"	7"	20'-0	3'-2½	1'-0	2"	185.4	1.043	472	4.10
	3	7½"	6"	7"	20'-0	4'-2½	1'-0	2"	191.0	1.117	460	4.17
	4	7½"	6"	7"	20'-0	5'-2½	1'-0	2"	197.6	1.191	493	4.25
	5	7½"	6"	7"	20'-0	6'-2½	1'-0	2"	210.4	1.285	505	4.32
	6	7½"	6"	7"	20'-0	7'-2½	1'-0	2"	227.9	1.339	550	4.40
8	4	8"	6"	8½"	26'-0	5'-4½	1'-0	2"	292.4	1.620	790	5.43
	5	8"	6"	8½"	26'-0	6'-4½	1'-0	2"	314.7	1.694	804	5.51
	6	8"	6"	8½"	26'-0	7'-4½	1'-0	2"	333.4	1.769	816	5.59
	7	8"	7"	8½"	26'-0	8'-4½	1'-0	2"	347.3	1.946	882	5.82
	8	8"	8"	8½"	26'-8	9'-4½	1'-0	2"	359.3	2.148	905	6.07
10	4	9"	6½"	9½"	32'-2	5'-6½	1'-3	2"	370.3	2.158	1144	6.68
	5	9"	6½"	9½"	32'-2	6'-6½	1'-3	2"	382.5	2.238	1157	6.76
	6	9"	6"	9½"	32'-0	7'-6½	1'-3	2"	388.0	2.272	1201	6.78
	7	9"	7"	9½"	32'-4	8'-6½	1'-3	2"	411.6	2.451	1223	7.00
	8	9"	8"	9½"	32'-6	9'-6½	1'-3	2"	430.0	2.655	1262	7.26
	9	9"	8"	10"	32'-8	10'-7	1'-3	2"	455.1	2.804	1294	7.37
	10	9"	9"	10"	33'-0	11'-7	1'-3	2"	466.0	3.046	1318	7.66
	11	9"	9"	10"	33'-0	12'-7	1'-3	2"	487.3	3.157	1338	7.82
	12	9"	9"	10"	33'-0	13'-7	1'-3	2"	518.1	3.268	1363	8.00
12	6	10"	6½"	11"	38'-2	7'-9	2"	2"	480.7	2.955	1720	8.02
	8	10"	8"	11"	38'-8	9'-9	2"	2"	524.6	3.296	1803	8.44
	10	10"	9"	11"	39'-0	11'-9	2"	2"	574.9	3.639	1834	8.85
	12	10"	9"	11"	39'-0	13'-9	2"	2"	609.6	3.861	1898	9.18
14	8	11½"	8"	12"	44'-8	9'-11½	2"	2"	711.1	4.030	2464	9.63
	10	11½"	9"	12"	45'-0	11'-11½	2"	2"	730.2	4.375	2519	10.03
	12	11½"	9"	12½"	45'-0	14'-0	2"	2"	809.9	4.667	2521	10.37
	14	11½"	10"	12½"	45'-4	16'-0	2"	2"	846.8	5.086	2646	10.96

REINFORCING BARS

CLEAR SPAN	CLEAR HEIGHT	"A" BARS A1 SIZE	A1 LENGTH	A2 SIZE	A2 LENGTH	A3 SIZE	A3 LENGTH	SPACING	"B" BARS B1 SIZE	B1 LENGTH	B2 SIZE	B2 LENGTH	B3 SIZE	B3 LENGTH	SPACING	"C" BARS C1 SIZE	C1 SPACING	C2 SIZE	C2 SPACING	C3 SIZE	C3 LENGTH	C4 LENGTH	SPACING	"M" BARS M1 SIZE	M1 LENGTH	M2 SIZE	M2 LENGTH	SPACING	"N" BARS N1 SIZE	N1 LENGTH	N2 SIZE	N2 LENGTH	SPACING
4	2	#5	13'-9	--	NONE	--	NONE	6"	#4	13'-9	--	NONE	--	NONE	12"	NONE		NONE		#4	2'-3	2'-3	12"	#4	12'-6	#4	3'-9	12"	#4	12'-6	#4	3'-3	18"
	3	#5	13'-9	--	NONE	--	NONE	6"	#4	13'-9	--	NONE	--	NONE	12"	NONE		NONE		#4	2'-9	2'-9	12"	#4	12'-6	#4	3'-9	12"	#4	12'-6	#4	3'-3	18"
	4	#5	13'-9	--	NONE	--	NONE	6"	#4	13'-9	--	NONE	--	NONE	13"	NONE		NONE		#4	3'-3	3'-3	13"	#4	12'-6	#4	3'-9	13"	#4	12'-6	#4	3'-3	18"
6	2	#5	18'-6	#6	5'-9	#5	5'-0	12"	#4	19'-9	#4	5'-0	--	NONE	14"	NONE		NONE		#4	2'-3	2'-3	9"	#4	18'-6	#6	5'-0	18"	#4	18'-6	#6	7'-0	12"
	3	#5	18'-6	#6	5'-9	#5	5'-0	12"	#4	19'-9	#4	5'-0	--	NONE	14"	NONE		NONE		#4	2'-9	2'-9	9"	#4	18'-6	#6	5'-0	18"	#4	18'-6	#6	7'-0	12"
	4	#5	18'-6	#6	5'-9	#5	5'-0	12"	#4	19'-9	#4	5'-0	--	NONE	14"	NONE		NONE		#4	3'-3	3'-3	9"	#4	18'-6	#6	5'-0	18"	#4	18'-6	#6	7'-0	12"
	5	#5	18'-6	#6	5'-9	#5	5'-6	12"	#4	19'-9	#4	5'-6	--	NONE	13"	NONE		NONE		#4	4'-3	3'-3	9"	#4	18'-6	#6	5'-3	18"	#4	18'-6	#6	7'-0	13"
	6	#5	18'-6	#6	5'-9	#5	5'-9	11"	#4	19'-9	#4	5'-9	--	NONE	12"	NONE		NONE		#4	5'-3	3'-3	9"	#4	18'-6	#6	5'-6	18"	#4	18'-6	#6	7'-3	14"
8	4	#5	25'-9	#7	7'-9	#6	6'-3	12"	#4	25'-9	#4	6'-6	--	NONE	11"	NONE		NONE		#5	4'-3	3'-0	10"	#4	24'-0	#6	6'-3	12"	#4	24'-0	#6	6'-0	11"
	5	#5	25'-9	#7	7'-9	#6	6'-3	12"	#4	25'-9	#4	6'-6	--	NONE	10½"	NONE		NONE		#5	5'-3	3'-0	10"	#4	25'-6	#6	6'-9	12"	#4	25'-6	#6	6'-9	10½"
	6	#5	25'-9	#7	7'-9	#6	6'-3	11½"	#4	25'-9	#4	6'-6	--	NONE	10"	NONE		NONE		#5	6'-3	3'-0	10"	#4	25'-6	#6	7'-9	12"	#4	25'-6	#6	7'-9	11"
	7	#5	26'-0	#7	8'-0	#6	6'-6	12"	#5	26'-0	#4	6'-6	--	NONE	14"	#4	18"	NONE		#5	7'-3	3'-0	12"	#4	25'-6	#6	8'-6	12"	#4	25'-6	#7	8'-6	14"
	8	#5	26'-3	#8	8'-0	#7	6'-6	15"	#5	26'-3	#4	6'-6	--	NONE	14"	#4	18"	#5	13"	#5	8'-3	3'-0	14"	#4	25'-6	#7	9'-6	13"	#4	25'-6	#7	9'-6	13"
10	4	#6	29'-6	#6	9'-6	#5	7'-3	12"	#4	32'-0	#4	6'-9	--	NONE	9"	NONE		NONE		#5	4'-3	3'-0	10½"	#5	30'-0	#6	7'-0	10½"	#5	30'-0	#6	6'-0	10½"
	5	#6	29'-6	#6	9'-6	#5	7'-6	12"	#4	32'-0	#4	7'-0	--	NONE	9"	NONE		NONE		#5	5'-0	3'-3	10½"	#5	30'-0	#6	7'-0	10½"	#5	30'-0	#6	6'-0	10½"
	6	#6	29'-6	#6	9'-6	#5	7'-6	12"	#4	32'-0	#4	7'-0	--	NONE	9"	NONE		NONE		#5	5'-9	3'-6	12"	#4	30'-0	#7	7'-6	12"	#4	30'-0	#7	6'-6	12"
	7	#6	30'-0	#6	9'-6	#5	8'-0	12"	#5	32'-0	#5	7'-0	--	NONE	14"	NONE		NONE		#5	7'-3	3'-0	12"	#5	30'-0	#7	7'-3	12"	#5	30'-0	#7	6'-3	12"
	8	#6	30'-3	#6	9'-6	#5	8'-6	12"	#5	32'-3	#4	7'-0	--	NONE	12"	NONE		#5	13"	#5	8'-3	3'-0	12"	#5	29'-6	#7	7'-3	12"	#5	28'-3	#7	6'-6	12"
	9	#6	30'-3	#6	9'-6	#5	8'-0	12"	#5	32'-3	#4	7'-0	--	NONE	12"	#4	13"	#5	13"	#5	9'-3	3'-0	12"	#5	29'-0	#7	7'-3	12"	#5	28'-3	#7	6'-6	12"
	10	#6	30'-6	#6	9'-6	#5	8'-0	12"	#5	32'-9	#4	7'-0	--	NONE	12"	#4	13"	#5	12"	#5	10'-3	3'-0	15"	#5	28'-9	#7	7'-3	12"	#5	27'-9	#7	6'-6	12"
	11	#6	30'-6	#6	9'-6	#5	8'-0	12"	#5	32'-9	#4	7'-0	--	NONE	11½"	#4	12"	#5	12"	#5	11'-3	3'-0	15"	#5	28'-9	#7	7'-3	12"	#5	27'-9	#7	6'-9	12"
	12	#6	30'-6	#5	9'-6	#5	8'-0	11"	#5	32'-9	#4	7'-0	--	NONE	11"	#5	14"	#5	11"	#5	12'-3	3'-0	11"	#4	28'-9	#7	7'-3	11"	#4	27'-3	#7	6'-9	11"
12	6	#5	33'-0	#8	11'-9	#7	10'-0	14"	#4	30'-6	#7	11'-6	#4	6'-0	14"	NONE		NONE		#5	6'-0	3'-6	12"	#5	37'-3	#8	7'-6	12"	#4	37'-3	#8	5'-9	12"
	8	#5	32'-6	#8	13'-0	#7	10'-3	14"	#4	30'-6	#7	11'-6	#4	6'-3	14"	#4	18"	#6	15"	#5	8'-0	3'-6	12"	#5	37'-3	#8	7'-6	12"	#4	37'-3	#8	6'-0	12"
	10	#5	32'-0	#8	13'-0	#7	10'-6	14"	#4	30'-9	#7	11'-6	#5	6'-6	14"	#4	15"	#6	12"	#5	10'-0	3'-6	12"	#5	37'-0	#8	7'-6	12"	#5	37'-0	#8	6'-0	12"
	12	#5	31'-9	#8	13'-0	#7	10'-6	14"	#4	30'-9	#7	11'-6	#5	6'-9	14"	#5	18"	#6	12"	#5	12'-0	3'-6	12"	#5	36'-9	#8	7'-6	12"	#5	36'-9	#8	6'-0	12"
14	8	#5	40'-0	#6	13'-0	#5	10'-6	9"	#5	40'-0	#5	12'-0	--	NONE	9"	#4	18"	NONE		#6	8'-9	3'-6	15"	#6	40'-0	#8	8'-3	12"	#7	40'-0	#8	7'-3	12"
	10	#5	40'-0	#6	13'-3	#5	10'-9	9"	#5	40'-0	#5	12'-0	--	NONE	9"	#4	18"	#5	11"	#6	10'-9	3'-6	11"	#5	40'-0	#8	8'-3	11"	#6	40'-0	#8	7'-3	11"
	12	#5	39'-9	#6	13'-6	#5	11'-0	9"	#6	40'-0	#5	12'-0	--	NONE	12"	#4	12"	#5	9"	#6	12'-9	3'-6	9"	#5	40'-0	#7	8'-3	9"	#5	40'-0	#7	7'-3	9"
	14	#5	39'-6	#6	14'-0	#5	11'-3	9"	#6	40'-0	#5	12'-0	--	NONE	10½"	#5	12"	#6	10½"	#6	14'-9	3'-6	10½"	#5	40'-0	#8	8'-3	10½"	#5	40'-0	#8	7'-3	10½"

CLEAR SPAN	CLEAR HEIGHT	"D" SIZE	D LENGTH	"X"	SPACING	"E" SIZE	E LENGTH	"X"	SPACING	"TA" NO.	TA SIZE	TA SPACING	"TB" NO.	TB SIZE	TB SPACING	"TC" NO.	TC SIZE	TC SPACING	"TS" NO.	TS SIZE	TS SPACING	G.H NO. OF EA. AT 1 END
4	2	#5	3'-6	1'-6	12"	#4	3'-6	1'-6	12"	19	#4	16"	19	#4	16"	6	#4	16"	4	#4	16"	9
	3	#5	4'-0	1'-6	12"	#4	4'-0	1'-6	12"	19	#4	16"	19	#4	16"	8	#4	16"	6	#4	15"	9
	4	#5	4'-6	1'-6	13"	#4	4'-6	1'-6	13"	19	#4	16"	19	#4	16"	10	#4	16"	6	#4	15"	9
6	2	#6	3'-9	1'-6	13"	#5	3'-6	1'-6	15"	31	#4	16"	25	#4	18"	6	#4	16"	4	#4	8"	12
	3	#5	4'-3	1'-6	12"	#4	4'-0	1'-6	12"	31	#4	16"	25	#4	18"	8	#4	16"	6	#4	15"	12
	4	#6	5'-0	1'-6	18"	#5	4'-3	1'-6	18"	31	#4	16"	25	#4	18"	10	#4	16"	6	#4	8"	12
	5	#6	5'-6	1'-6	15"	#5	4'-6	1'-6	15"	31	#4	16"	25	#4	18"	14	#4	16"	8	#4	8"	12
	6	#6	5'-6	1'-6	18"	#6	5'-0	1'-6	18"	31	#4	16"	25	#4	18"	16	#4	16"	10	#4	5"	12
8	4	#6	4'-3	1'-6	11"	#5	5'-3	1'-6	11"	43	#4	14"	34	#4	16"	10	#4	16"	6	#4	8"	18
	5	#6	4'-8	1'-6	10½"	#5	6'-0	1'-6	10½"	43	#4	14"	34	#4	16"	14	#4	16"	8	#4	8"	18
	6	#6	5'-6	1'-6	10½"	#5	5'-6	1'-6	10½"	43	#4	14"	34	#4	16"	16	#4	16"	10	#4	5"	18
	7	#6	6'-9	1'-6	14"	#6	5'-6	1'-6	14"	40	#4	17"	34	#4	16"	18	#4	16"	18	#4	8"	18
	8	#7	4'-6	1'-6	13"	#6	4'-3	1'-6	13"	37	#4	16"	34	#4	16"	22	#4	16"	22	#4	8"	18
10	4	#6	4'-3	1'-6	10"	#5	5'-3	1'-6	10"	49	#4	16"	43	#4	18"	10	#4	16"	6	#4	8"	21
	5	#6	4'-6	1'-6	10"	#5	6'-0	1'-6	10"	49	#4	16"	43	#4	18"	14	#4	16"	8	#4	8"	21
	6	#7	5'-6	1'-6	12"	#6	5'-3	1'-6	12"	49	#4	16"	43	#4	18"	18	#4	16"	10	#4	8"	21
	7	#7	6'-9	1'-9	12"	#6	6'-9	1'-9	12"	49	#4	16"	43	#4	18"	18	#4	16"	10	#4	8"	21
	8	#7	6'-3	2'-3	12"	#7	6'-0	2'-3	12"	49	#4	16"	43	#4	18"	22	#4	16"	12	#4	8"	21
	9	#7	6'-6	2'-6	12"	#7	6'-6	2'-9	15"	49	#4	16"	43	#4	18"	24	#4	16"	24	#4	8"	21
	10	#7	6'-6	2'-9	12"	#7	7'-0	3'-3	12"	49	#4	16"	43	#4	18"	26	#4	16"	26	#4	8"	21
	11	#7	6'-6	2'-9	12"	#7	7'-0	3'-3	12"	49	#4	16"	46	#4	18"	30	#4	16"	30	#4	8"	21
	12	#7	6'-6	2'-9	11"	#7	7'-3	3'-6	11"	49	#4	16"	46	#4	18"	32	#4	16"	32	#4	8"	21
12	6	#8	5'-6	1'-6	13"	#7	6'-0	1'-6	13"	64	#4	15"	52	#4	18"	16	#4	16"	10	#4	5"	24
	8	#8	4'-9	1'-8	15"	#8	4'-9	1'-8	15"	64	#4	15"	52	#4	18"	22	#4	16"	22	#4	8"	24
	10	#8	5'-0	1'-11	12"	#7	5'-0	1'-11	12"	64	#4	15"	52	#4	18"	26	#4	16"	26	#4	8"	24
	12	#8	5'-3	2'-2	12"	#8	5'-3	2'-2	12"	61	#4	15"	52	#4	18"	32	#4	16"	32	#4	8"	24
14	8	#8	9'-6	3'-0	12"	#7	8'-0	3'-3	12"	79	#4	13"	64	#4	16"	22	#4	16"	22	#4	8"	30
	10	#8	8'-0	3'-3	11"	#7	8'-0	3'-3	11"	79	#4	13"	64	#4	16"	26	#4	16"	26	#4	8"	30
	12	#7	7'-0	3'-3	9"	#7	7'-3	3'-3	9"	79	#4	13"	64	#4	16"	32	#4	16"	32	#4	8"	30
	14	#8	7'-0	3'-3	10½"	#8	7'-0	3'-3	10½"	79	#4	13"	64	#4	16"	38	#4	16"	38	#4	8"	30

✱ NOTE: QUANTITIES "AT ONE END" INCLUDE PARAPET, CUT-OFF WALL, AND BARREL BEYOND LENGTH "L". WINGWALL QUANTITIES ARE NOT INCLUDED.

"P" BARS

CLEAR SPAN	4'	6'	8'	10'	12'	14'
SIZE	#5	#5	#6	#7	#8	#9

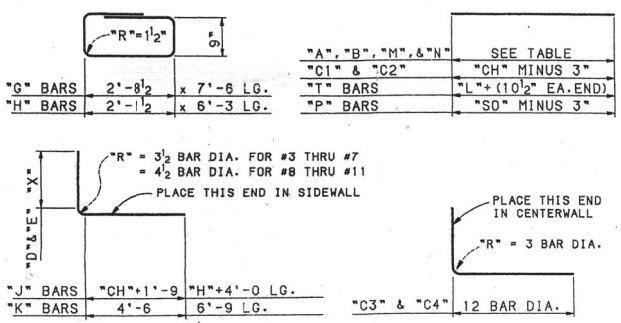

NOTE: "J" BARS ARE THE SAME SIZE AS "D" BARS.
"K" BARS ARE THE SAME SIZE AS "E" BARS.

REINFORCING STEEL DIAGRAM

NUMBER OF BARS REQUIRED

"A1", "A3", "B1", "B3", "M1", & "N1" BARS: 12L ÷ SPACING
"A2", "B2", "C2", "D", "E", "M2", & "N2" BARS: 24L ÷ SPACING
"P" BARS: 12 FOR CUT-OFF & PARAPET AT EACH END
"C1" BARS: (24L ÷ SPACING) PLUS
2 AT EACH END
"C3" & "C4" BARS: (48L ÷ SPACING) PLUS
4 AT EACH END
"J" & "K" BARS: 4 OF EACH AT EACH END
(FOR PARAPET AND CUT-OFF WALL)
OTHER BARS: SEE TABLE
"L" = LENGTH OF BARREL IN FEET
"CH" = CLEAR HEIGHT

NOTE: REFER TO SERIAL CB-33 SHEET 1 OF 5 FOR CONCRETE BOX CULVERT DETAILS, DESIGN DATA, AND GENERAL NOTES.

NO.	DESCRIPTION	DATE	BY
6			
5			
4			
3			
2			
1			

REVISIONS (OR CHANGE NOTICES)

NEW MEXICO STATE
HIGHWAY AND TRANSPORTATION
DEPARTMENT

CONCRETE BOX CULVERT BARRELS
TRIPLE OPENING - NORMAL
DESIGN No. 1
0' TO 5' COVER

722781

LAYOUT BY
DRAWN BY
CHECKED BY
APPROVAL RECOMMENDED: BRIDGE ENGINEER — DATE
APPROVED: BRIDGE DESIGN ENGINEER — 7-22-94 DATE

SERIAL CB-33 SHEET 2 OF 5

DESIGNED BY: H.T. 1/61 CHECKED BY: S.J.M. 10/93
DETAILED BY: J.A.K. 10/93 CHECKED BY: R.A. 10/93
PLOT DATE: 10/28/93

SCANNED BY MEGA REPRO

BRIDGE#1/STANDARDS/BRIDGE/STANDARDS#16A

PRJ. NO. 722781

N. M. P. ..... SHEET .....

SHEET 20 OF 27

FHWA Region No.	STATE		SHEET NO	TOTAL SHEETS
6	NEW MEXICO			

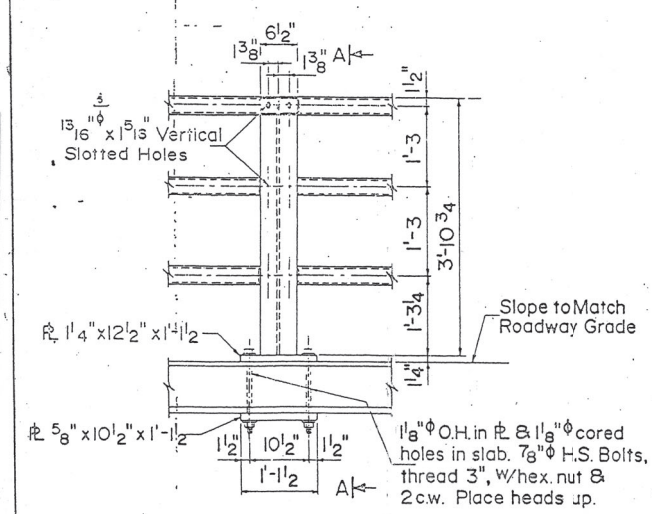

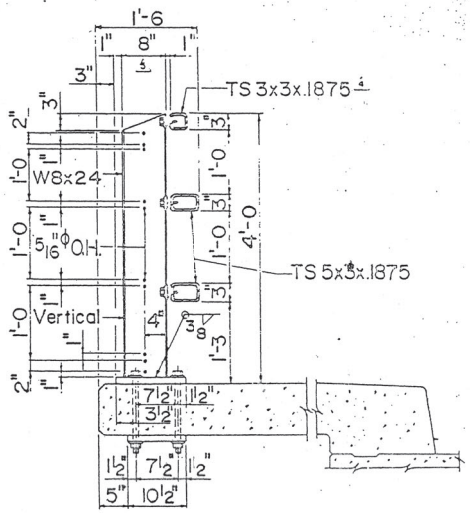

Use beveled washers with 5% slope when top & bottom of concrete diverge by more than 3%. If the divergence exceeds 9% special details will be shown on the bridge plans.

ELEVATION

SECTION A-A

DETAILS OF POSTS ON SUPERSTRUCTURE

Details for posts on wingwalls are identical except W8x28 shall be used in place of W8x24 and anchors are to be embeded in wingwall concrete.

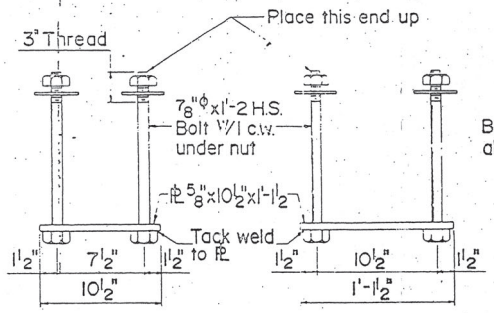

ANCHOR FOR RAIL POST ON WINGWALL

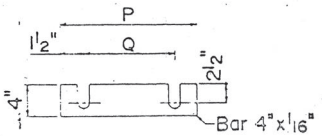

P = 1'-1½ & 1'-0½ ~ Q = 10½" & 7½". One shim P = 1'-1½ & one shim P = 1'-0½ for each Type D rail post required. Post shims are to be used between post and concrete where neccessary.

POST SHIMS ~ TYPE D RAIL

Notes: See sheet 3 of 5 for details of 'Elevation At Abutments', 'Elevation of Railing' and 'Spacing of Rail Posts'.

For General Notes and details not shown on this sheet, see sheet 1 of 5.

△ Tension wires to be #7 ga. galvanized coil spring wire.

△ Fabric is to be attached to tension wires with #11 ga. galvanized hog rings spaced 24" o.c.

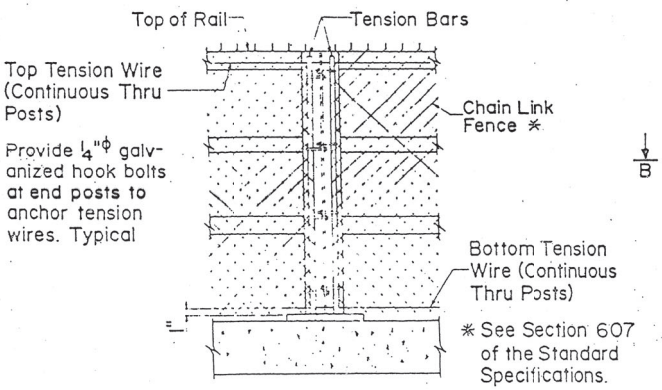

SECTION B-B

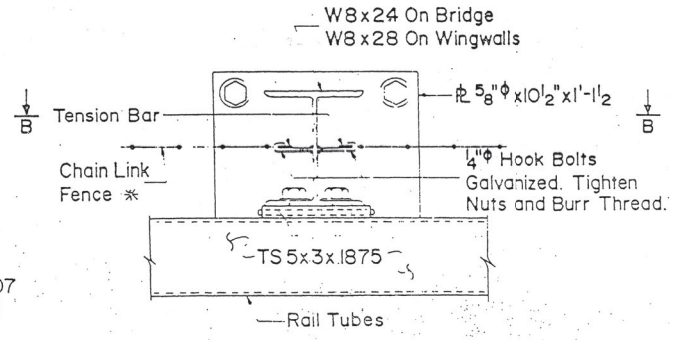

TRANSVERSE SECTION THRU POST

DETAILS FOR ATTACHING CHAIN LINK FENCE

THIS SERIAL REVISED: 3-6-85

IDENT. NO.	DESCRIPTION	DATE	BY
△	DELETE WORD BRIDGE FROM TITLE	3-6-85	PAZ
△	REVISE DIMENSIONS	3-13-81	E.R.D.
△	UPDATE TUBE SIZE	3-13-81	E.R.D.
△	ADDED CROSS REFERENCE	2-4-80	E.R.D.
△	ADDED NOTES	10/26/79	E.R.D.
△	CHANGED SERIAL DESIGNATION	10/26/79	E.R.D.

REVISIONS OR CHANGE NOTICES

NEW MEXICO
STATE HIGHWAY DEPARTMENT

△ METAL RAILING
TYPE D

722781

DESIGNED BY JAH
DRAWN BY AJS
CHECKED BY EFD

APPROVAL RECOMMENDED: BRIDGE ENGINEER DATE
APPROVED: DIRECTOR, BRIDGE DEVELOPMENT DIVISION DATE

△ SERIAL BMR-005-06

1 2 3 4 5 6 7 8 9 10 11 12 13 14 15
2 6 7 2 2 7 8 1 2 1 0 9

Serial BMR-001 must accompany this sheet.

PRJ. NO 722781

SHEET 21 OF 27 SHEETS

NEW MEXICO PROJECT NO.	
F.H.W.A. REGION NO. 6	

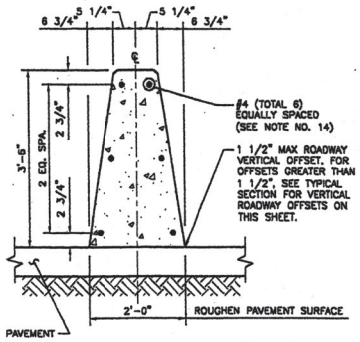

TYPICAL SECTION

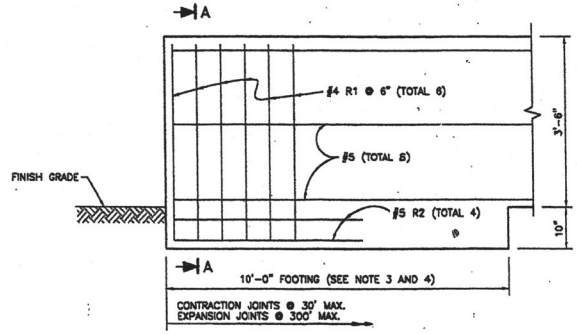

END ANCHORAGE

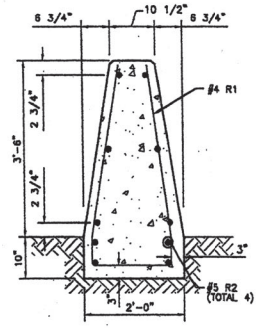

SECTION A–A

NOTES

1. ALL WORK SHALL BE DONE IN ACCORDANCE WITH THE STANDARD SPECIFICATIONS FOR HIGHWAY AND BRIDGE CONSTRUCTION.
2. CONCRETE SHALL BE CLASS "A".
3. FOOTING IS REQUIRED AT CONCRETE BARRIER ENDS AND AT INTERRUPTIONS IN CONCRETE BARRIER.
4. EXPANSION AND CONTRACTION JOINTS IN CONCRETE WALL BARRIER SHALL BE LOCATED AT THE CONCRETE PAVEMENT JOINTS. JOINT FILLER MATERIAL SHALL BE THE SAME SIZE AS JOINT OR 1/2" IN. MINIMUM.
5. REINFORCING STIRRUP, R3 IS NOT REQUIRED FOR VERTICAL ROADWAY OFFSETS LESS THAN 1 FOOT. FOR OFFSETS LESS THAN 1 FOOT WALL BARRIERS SHALL BE CAST MONOLITHIC.
6. FOR ADDITIONAL DETAILS SEE STANDARD PLAN "CONCRETE WALL BARRIER TYPE 42 AT COLUMN AND SIGN PEDESTALS".
7. CHAMFER ALL EXPOSED EDGES 3/4".
8. CONCRETE COVER FOR REINFORCING BARS SHALL BE A MIN. OF 2 IN. CLEAR.
9. PROVIDE CONTRACTION JOINTS AT 30 FEET MAX INTERVALS. CONTRACTION JOINTS SHALL BE MADE USING COLD JOINTS, TOOLED JOINTS, OR SAW CUTS. SAW CUT JOINTS SHALL BE SEALED WITH A SILICON SEALANT APPROVED BY THE PROJECT MANAGER.
10. EXPANSION JOINTS SHALL BE LOCATED AT 300 FT. MAX. INTERVALS. EXPANSION JOINTS SHALL BE CONSTRUCTED 0 FEET AND 15 FEET FROM END OF BRIDGE RAILING. (SEE CONNECTION TO STRUCTURE DETAIL, THIS SHEET) SEE DRAWING TITLED "42 IN. DOWEL ASSEMBLY FOR EXPANSION JOINTS IN CONCRETE WALL BARRIER AND CONCRETE BARRIER RAILING" FOR EXPANSION JOINT DETAILS.
11. FOR DOWEL AND SLEEVE ASSEMBLY SEE SERIAL NO. CWB-42-2/6 TITLED "42 IN. DOWEL ASSEMBLY FOR EXPANSION JOINTS IN CONCRETE WALL BARRIER AND CONCRETE BARRIER RAILING".
12. ADDITIONAL STEEL REINFORCING REQUIRED BY THE CONTRACTOR FOR CONSTRUCTION OF THE BARRIER WALL SHALL BE INCIDENTAL TO THE UNIT PRICE FOR CONCRETE WALL BARRIER.
13. CWB SHALL BE INSTALLED BY EITHER SLIP-FORMING OR CASTING-IN-PLACE. PRECAST SECTION INSTALLATION IS NOT PERMITTED.
14. THE LONGITUDINAL REBARS MAY BE SUBSTITUTED WITH WELDED DEFORMED WIRE FABRIC (ASTM A497, fy = 70,000 psi) WITH AN EQUIVALENT AREA OF STEEL. THE CAGE SHALL REMAIN IN THE INTENDED POSITION DURING CONSTRUCTION.
15. CONCRETE WALL BARRIER TYPE 42 SHALL BE PAID PER LINEAR FOOT PER INSTALLATION.
16. REINFORCING BARS SHALL BE INCLUDED IN THE COST OF THE CONCRETE WALL BARRIER.

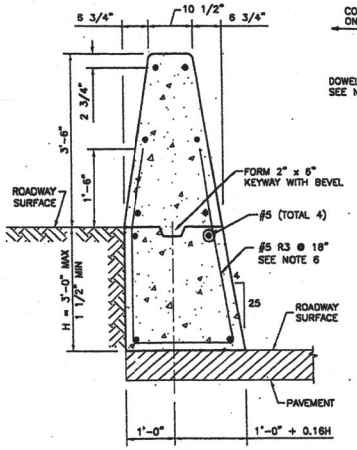

TYPICAL SECTION FOR VERTICAL ROADWAY OFFSETS

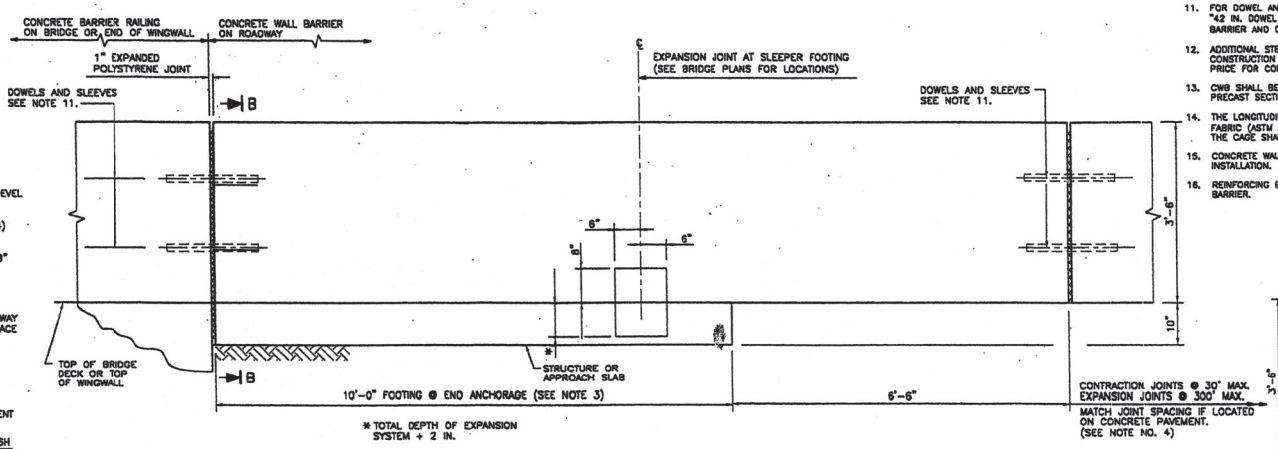

CONNECTION TO STRUCTURE

ESTIMATED QUANTITIES

(FOR CONTRACTOR'S INFORMATION ONLY)

ITEM	UNIT	TOTAL
REINFORCING BARS, GR 60	LB/FT	6.3
STRUCTURAL CONCRETE, "CLASS A"	CY/FT	0.19

THE QUANTITIES SHOWN IN THE ABOVE TABLE ARE BASED ON THE TYPICAL SECTION. ADDITIONAL QUANTITIES MUST BE CALCULATED FOR END ANCHORAGE AND CONNECTION TO STRUCTURE.

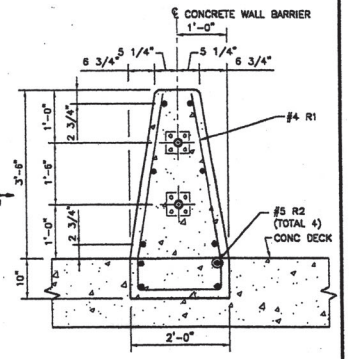

SECTION B–B

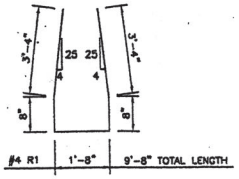

NO. REQ'D = 6 PER END ANCHORAGE
6 PER CONNECTION TO STRUCTURE

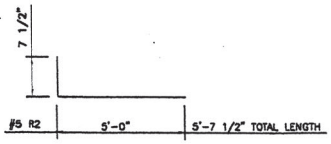

NO. REQ'D = 4 PER END ANCHORAGE
4 PER CONNECTION TO STRUCTURE

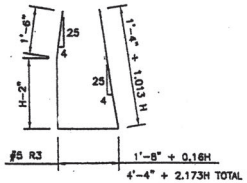

4'-4" + 2.173H TOTAL LENGTH
NO. REQ'D = 0.67 PER FOOT

NO.	DESCRIPTION	DATE	BY
6			
5			
4			
3			
2			
1			

REVISIONS (OR CHANGE NOTICES)

DESIGNED BY: NA
DETAILED BY: LH
CHECKED BY: RM

APPROVAL RECOMMENDATION — BRIDGE DESIGN ENGINEER — DATE 2-19-02
APPROVED — DESIGN BUREAU CHIEF — DATE

NEW MEXICO STATE HIGHWAY & TRANSPORTATION DEPARTMENT

CONCRETE WALL BARRIER TYPE 42

722781

CWB-42-1/6 SHEET 21A OF 27

1 2 3 4 5 6 7 8 9 10 11 12 13 14 15
26 7 2 2 2 7 . 8 1 2 1 A 6 8

CWB42A.dwg

NEW MEXICO PROJECT NO.
F.H.W.A. REGION NO. 6

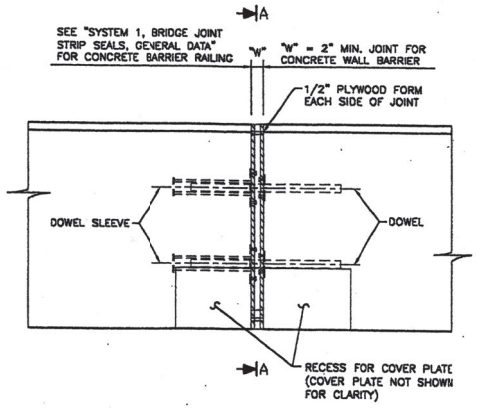

ASSEMBLY DETAIL

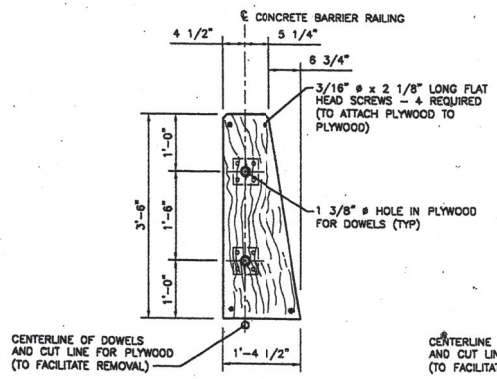

SECTION A–A

BRIDGE BARRIER RAILING

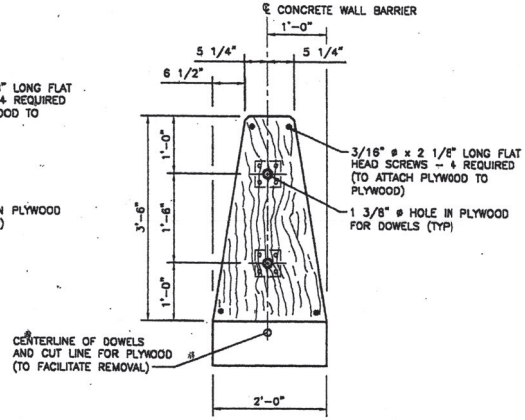

SECTION A–A

CONCRETE WALL BARRIER

GENERAL NOTES

1. WORKMANSHIP AND MATERIALS SHALL CONFORM TO THE NEW MEXICO STATE HIGHWAY AND TRANSPORTATION DEPARTMENT STANDARD SPECIFICATIONS FOR HIGHWAY AND BRIDGE CONSTRUCTION.
2. STRUCTURAL STEEL SHALL CONFORM TO AASHTO M 183 UNLESS OTHERWISE NOTED ON THE DETAILS, AND SHALL BE GALVANIZED IN ACCORDANCE WITH SECTION 545.23 OF THE STANDARD SPECIFICATIONS.
3. THE SLEEVE ASSEMBLY SHALL BE SET PARALLEL TO THE BRIDGE DECK GRADE AND THE OUTSIDE FACE OF THE CONCRETE BARRIER RAILING.
4. AFTER CONCRETE HAS TAKEN INTIAL SET, REMOVE STYROFOAM FILLER, 1/4" ø HEX. HD. CAP SCREWS, AND THE PLYWOOD FORMS FROM THE JOINT. (CUT THE 1/4" ø SCREWS TO FACILITATE THE PLYWOOD FORM REMOVAL).
5. PLYWOOD FORMS AND STYROFOAM FILLER SHALL BE CUT TO THE CROSS SECTION OF THE CONCRETE BARRIER RAILING. PLYWOOD FORMS SHALL BE COATED WITH AN APPROVED BOND-BREAKER.
6. FOR MOVEMENT LENGTHS IN EXCESS OF 300 FEET INCREASE JOINT OPENING (*) AS REQUIRED.
7. THE COST OF ALL MATERIALS AND INSTALLATION FOR THE JOINTS SHALL BE CONSIDERED INCIDENTAL TO THE COST TO THE BRIDGE BARRIER RAILING OR CONCRETE WALL BARRIER AND, THEREFORE, NO DIRECT PAYMENT WILL BE MADE.

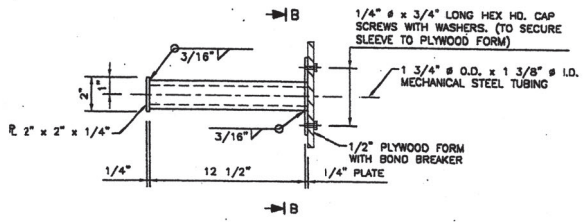

DOWEL SLEEVE DETAIL

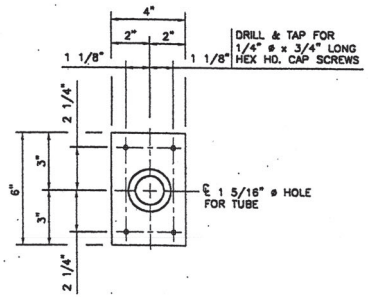

SECTION B–B

1/4 IN. THICK PLATE

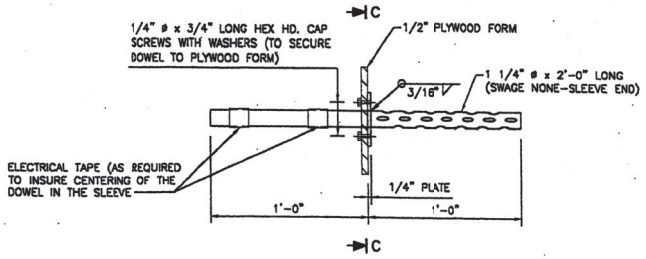

DOWEL DETAIL

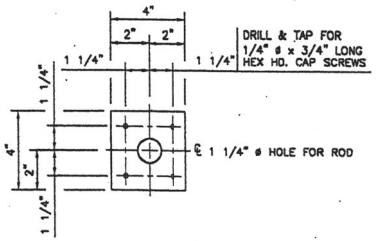

SECTION C–C

1/4 IN. THICK PLATE

1	2	3	4	5	6	7	8	9	10	11	12	13	14	15
2	6	7	2	2	7	.	8	1	2	1	8	0	9	

City Proj. # 722781

NO.	DESCRIPTION	DATE	BY
6			
5			
4			
3			
2			
1			

REVISIONS (OR CHANGE NOTICES)

DESIGNED BY: NA
DETAILED BY: LH
CHECKED BY: RM

APPROVAL RECOMMENDATION: 2-19-02 BRIDGE DESIGN ENGINEER DATE
APPROVED: DESIGN BUREAU CHIEF DATE

NEW MEXICO STATE HIGHWAY & TRANSPORTATION DEPARTMENT

42 IN. DOWEL ASSEMBLY FOR EXPANSION JOINTS IN CONCRETE WALL BARRIER & CONCRETE BARRIER RAILING

CWB-42-2/6 SHEET 21B OF 27

CWB42B.dwg

NEW MEXICO PROJECT NO.
F.H.W.A. REGION NO. 6

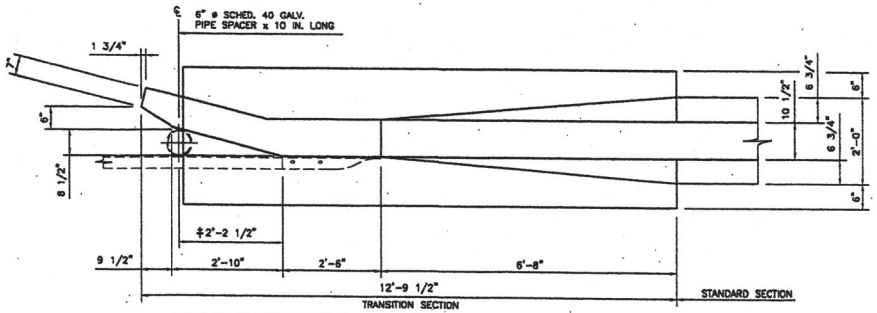

‡ MOVE SPACER RIGHT OR LEFT AS REQUIRED TO FIT SNUGLY BETWEEN BARRIER AND THRIE BEAM.

PLAN

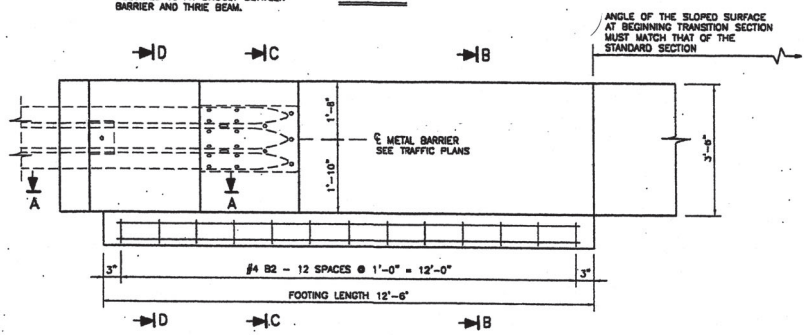

ELEVATION

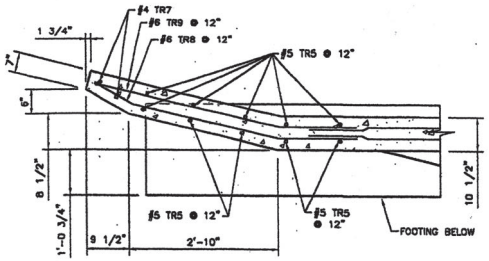

SECTION A - A

★ THESE DIMENSIONS SHALL BE MEASURED ABOVE THE TOP OF WEARING SURFACE. (TOP OF SURFACE OR TOP OF OVERLAY - IF ANY)

** ESTIMATED QUANTITIES

(FOR ONE TRANSITION WITH FOOTINGS)

ITEM	UNIT	TOTAL
REINFORCING BARS, GRADE 60	LB	280
STRUCTURAL CONCRETE CLASS "A"	CY	3.8

**FOR CONTRACTOR'S INFORMATION ONLY

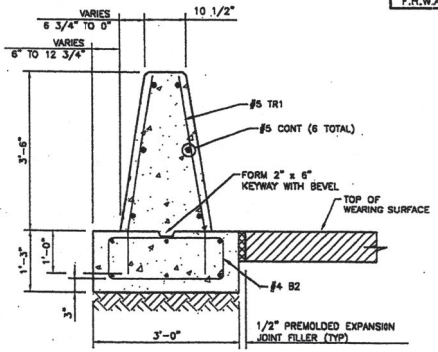

SECTION B-B

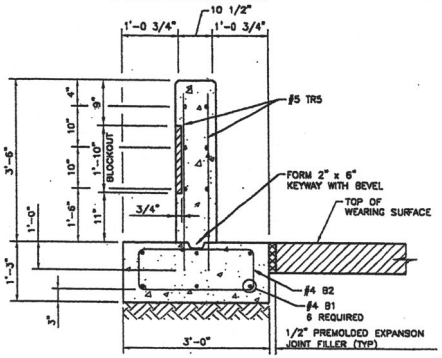

SECTION C-C

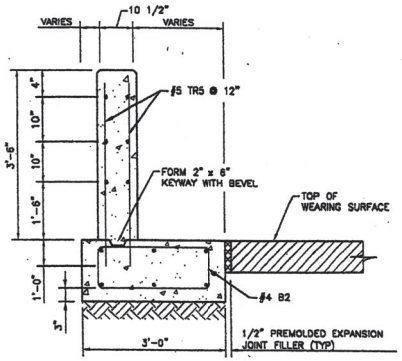

SECTION D-D

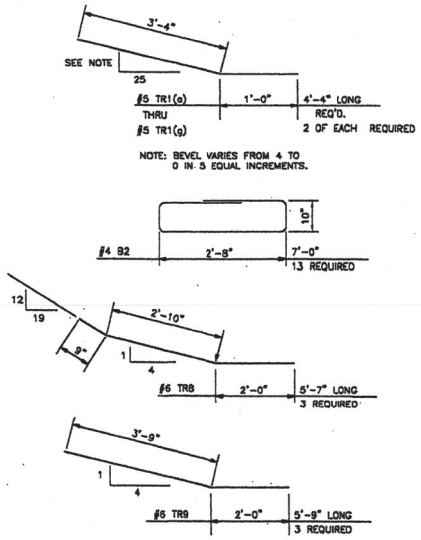

#5 TR5	4'-4"	10 REQUIRED
#4 TR7	3'-2"	2 REQUIRED
#4 B1	12'-0"	6 REQUIRED

REBAR SCHEDULE

(FOR ONE TRANSITION)

NOTES

1. REINFORCING BARS SHALL CONFORM TO THE REQUIREMENTS CONTAINED IN 540.21(a) OF THE STANDARD SPECIFICATIONS. REINFORCING BARS AND SHALL BE GRADE 60 UNLESS A DIFFERENT GRADE IS SPECIFIED ELSEWHERE IN THE PLANS. DIMENSIONS SHOWN REFER TO THE CENTERLINE OF BARS UNLESS NOTED OTHERWISE.
2. CHAMFER ALL EXPOSED EDGES 3/4 IN.
3. CONCRETE COVER FOR REINFORCING BARS SHALL BE A MIN. OF 2 IN. CLEAR.

1 2 3 4 5 6 7 8 9 10 11 12 13 14 15
26 72227 81 21 00 51

NO.	DESCRIPTION	DATE	BY
6			
5			
4			
3			
2			
1			

REVISIONS (OR CHANGE NOTICES)

DESIGNED BY: NA
DETAILED BY: LH
CHECKED BY: RM

APPROVAL RECOMMENDATION — BRIDGE DESIGN ENGINEER — DATE 2-19-02
APPROVED — DESIGN BUREAU CHIEF — DATE

NEW MEXICO STATE HIGHWAY & TRANSPORTATION DEPARTMENT

42 IN. CONCRETE WALL BARRIER TRANSITION SECTION DETAILS

City Proj # 722781

CWB-42-3/6 SHEET 21C OF 27

CWB42C.dwg

NEW MEXICO PROJECT NO.
F.H.W.A. REGION NO. 6

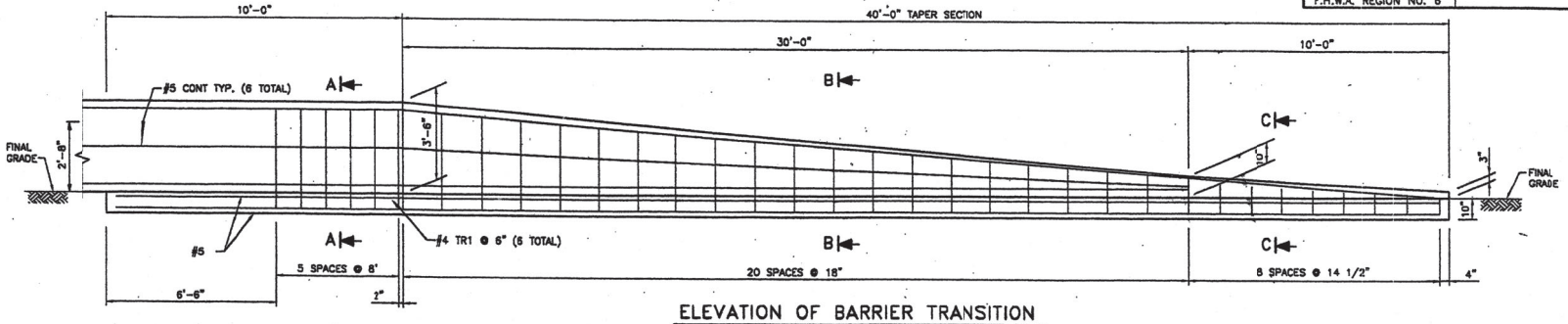

ELEVATION OF BARRIER TRANSITION

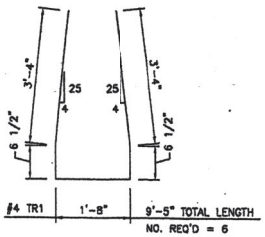

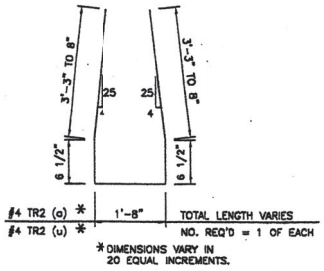

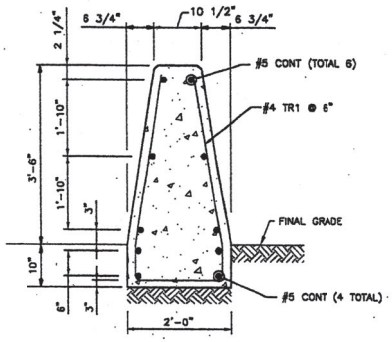

SECTION A-A

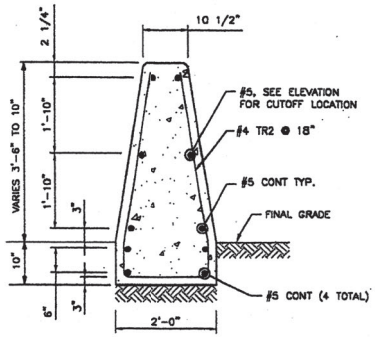

SECTION B-B

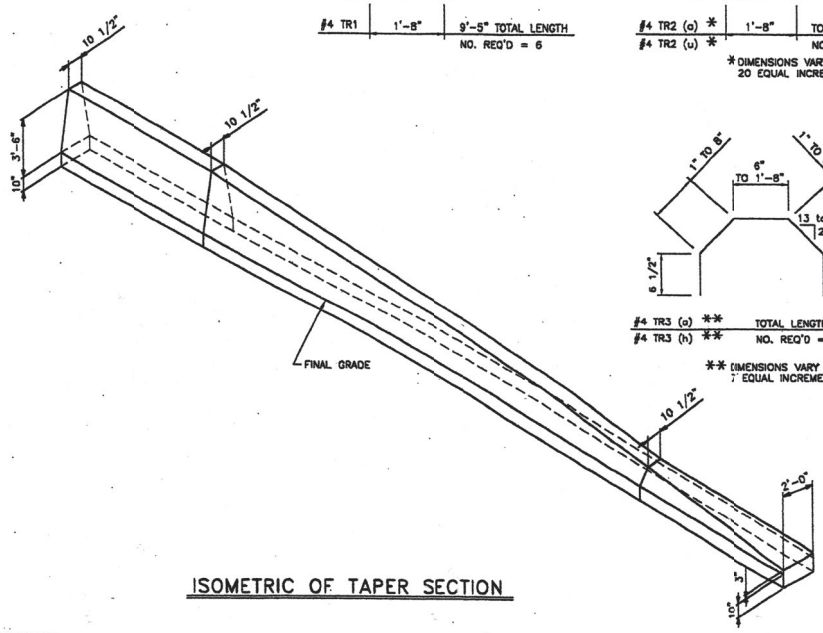

ISOMETRIC OF TAPER SECTION

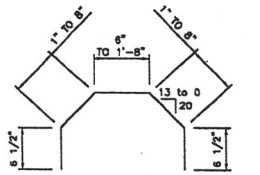

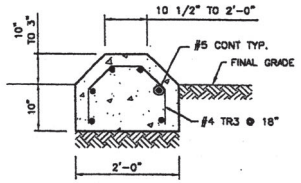

SECTION C-C

NOTES

1. ALL WORK SHALL BE DONE IN ACCORDANCE WITH THE STANDARD SPECIFICATIONS FOR HIGHWAY & BRIDGE CONSTRUCTION. SHOP DRAWING APPROVAL IS REQUIRED ON PRECAST SECTIONS.
2. CONCRETE SHALL BE STRUCTURAL CONCRETE CLASS "A".
3. CONCRETE WALL BARRIER TRANSITION TO BE USED ONLY WHEN A MINIMUM OF 30 FEET RECOVERY AREA IS PROVIDED ON THE TRAFFIC APPROACH SIDE.
4. CHAMFER ALL EXPOSED EDGES 3/4 IN.
5. CONCRETE COVER FOR REINFORCING BARS SHALL BE A MIN. OF 2 IN. CLEAR.
6. CONCRETE WALL BARRIER TYPE 42 TRANSITION SHALL BE PAID PER LINEAR FOOT PER INSTALLATION.

*** ESTIMATED QUANTITIES

ITEM	UNIT	TOTAL
REINFORCING BARS, GRADE 60	LB	640
STRUCTURAL CONCRETE CLASS "A"	CY	8.5

***FOR CONTRACTOR'S INFORMATION ONLY

1 2 3 4 5 6 7 8 9 10 11 12 13 14 15
26 7 2 2 2 7. 8 1 2 1 0 0 8

NO.	DESCRIPTION	DATE	BY
6			
5			
4			
3			
2			
1			

REVISIONS (OR CHANGE NOTICES)

DESIGNED BY: NA
DETAILED BY: LN
CHECKED BY: RM

APPROVAL RECOMMENDATION — BRIDGE DESIGN ENGINEER — DATE 2-19-02
APPROVED — DESIGN BUREAU CHIEF — DATE

NEW MEXICO STATE HIGHWAY & TRANSPORTATION DEPARTMENT

CONCRETE WALL BARRIER TYPE 42 TRANSITION

722781

CWB-42-4/6 SHEET 21D OF 27

CWB420.dwg

NEW MEXICO PROJECT NO.
F.H.W.A. REGION NO. 6

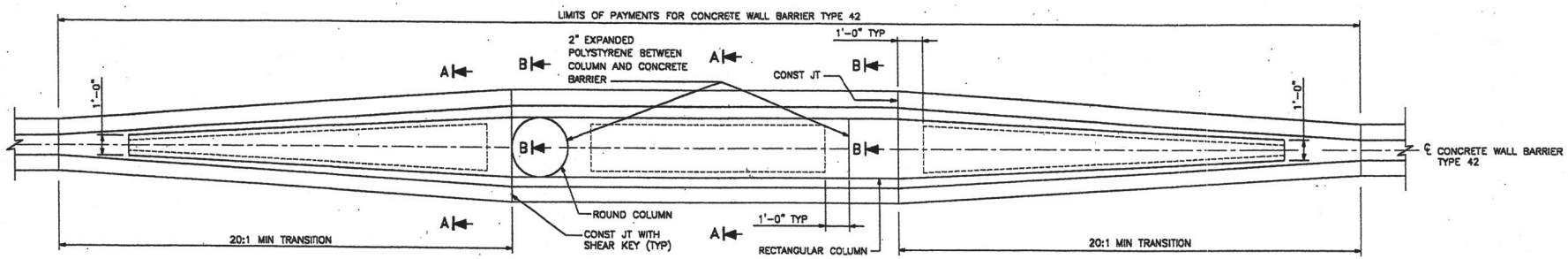

TRANSITION AT BRIDGE COLUMNS

N.T.S.

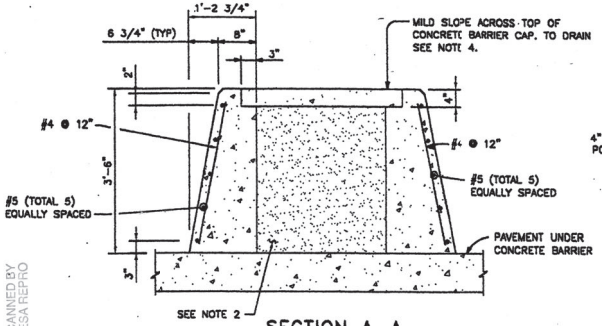

SECTION A–A

N.T.S.

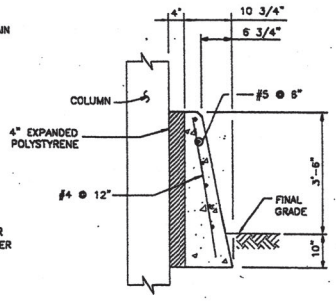

SECTION B–B

N.T.S.

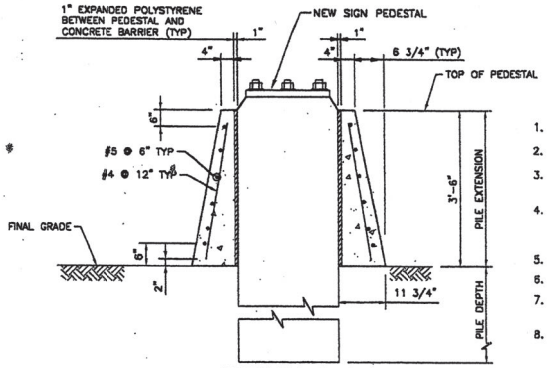

SECTION C–C

N.T.S.

NOTES

1. SEE STANDARD PLAN FOR CONCRETE WALL BARRIER TYPE 42.
2. PLACE GRANULAR MATERIAL FROM BASE TO BOTTOM OF 4 IN. CAP.
3. REINFORCING STEEL SHALL EXTEND CONTINUOUS THROUGH CONSTRUCTION JOINTS.
4. ADJUST HEIGHT OF CONCRETE BARRIER WALL ON LOW SIDE OF OFFSET OR SUPERELEVATED ROADWAYS TO PROVIDE LEVEL GRADE ACROSS TOP OF CONCRETE BARRIER CAP.
5. CONCRETE SHALL BE CLASS "A".
6. CHAMFER ALL EXPOSED EDGES 3/4 IN.
7. CONCRETE COVER FOR REINFORCING BARS SHALL BE A MIN. OF 2 IN. CLEAR.
8. CONCRETE WALL BARRIER TYPE 42 AT COLUMN AND SIGN PEDESTALS SHALL BE PAID PER LINEAR FOOT PER COMPLETE INSTALLATION, WHICH INCLUDES BOTH SIDES OF THE OBSTRUCTION.

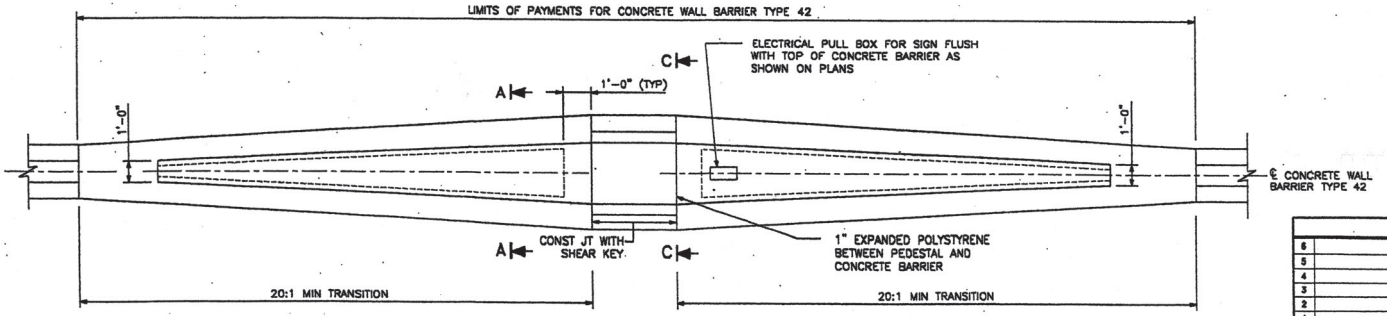

TRANSITION AT SIGN PEDESTAL

N.T.S.

1 2 3 4 5 6 7 8 9 10 11 12 13 14 15
26 7227.8121E05

NO.	DESCRIPTION	DATE	BY
6			
5			
4			
3			
2			
1			

REVISIONS (OR CHANGE NOTICES)

DESIGNED BY: NA
DETAILED BY: LH
CHECKED BY: RM

APPROVAL RECOMMENDATION — BRIDGE DESIGN ENGINEER — DATE 2-19-02
APPROVED — DESIGN BUREAU CHIEF — DATE

NEW MEXICO STATE HIGHWAY & TRANSPORTATION DEPARTMENT

CONCRETE WALL BARRIER TYPE 42 AT COLUMN AND SIGN PEDESTALS

722781

CWB-42-5/6 SHEET 21E OF 27

CWB42E.dwg

NEW MEXICO PROJECT NO.	
F.H.W.A. REGION NO. 6	

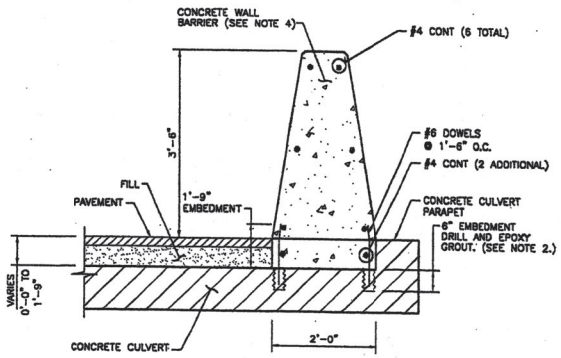

TYPICAL SECTION FOR
0'-0" TO 1'-9" FILL
N.T.S.

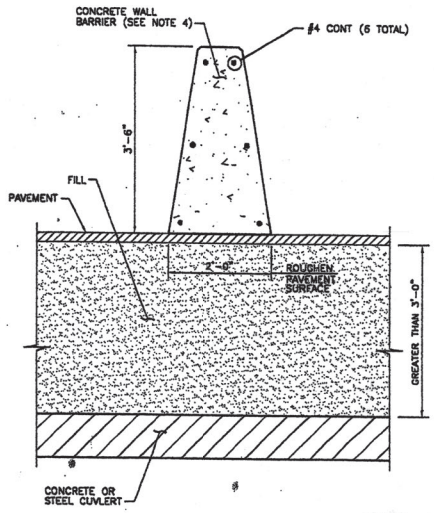

TYPICAL SECTION FOR
OVER 3'-0" FILL
N.T.S.

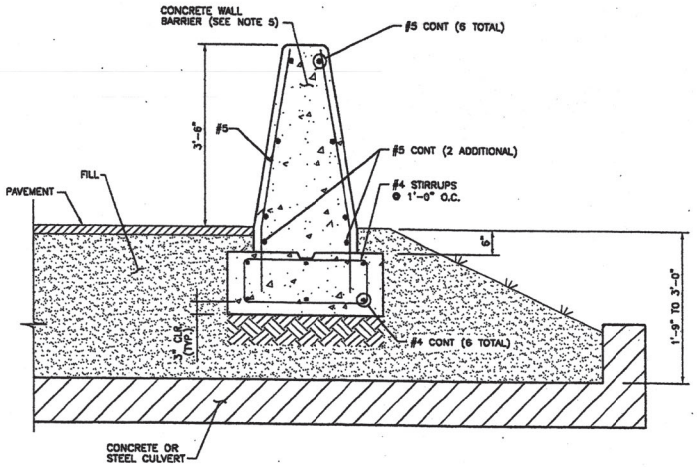

TYPICAL SECTION FOR
1'-9" TO 3'-0" FILL
N.T.S.

NOTES

1. REINFORCING BARS SHALL CONFORM TO THE REQUIREMENTS CONTAINED IN 540.21(a) OF THE STANDARD SPECIFICATIONS. REINFORCING BARS SHALL BE GRADE 60 UNLESS A DIFFERENT GRADE IS SPECIFIED ELSEWHERE IN THE PLANS.
2. MATERIAL TO BE USED FOR CORING AND GROUTING SHALL COMPLY WITH SECTION 522 OF NMSHTD STANDARD SPECIFICATIONS FOR HIGHWAY AND BRIDGE CONSTRUCTION, LATEST EDITION, AND SHALL BE APPROVED BY THE PROJECT MANAGER.
3. ADDITIONAL LONGITUDINAL REINFORCEMENT, DOWELS, EPOXY GROUT AND EXPANSION JOINT FILLER SHALL BE INCIDENTAL TO THE CONCRETE WALL BARRIER.
4. FOR ALL BARS AND DIMENSIONS NOT SHOWN FOR THE 0'-0" TO 1'-9" FILL BARRIER AND THE OVER 3'-0" FILL BARRIER, SEE TYPICAL SECTION ON SERIAL NO. CWB-42-1/6 TITLED "CONCRETE WALL BARRIER, TYPE 42".
5. FOR ALL BARS AND DIMENSIONS NOT SHOWN FOR THE 1'-9" TO 3'-0" FILL BARRIER, SEE SECTION B-B ON SERIAL NO. CWB-42-4/6 TITLED "42 IN. CONCRETE WALL BARRIER, TRANSITION SECTION DETAILS".

1 2 3 4 5 6 7 8 9 10 11 12 13 14 15
26 7227.8121F06

NO.	DESCRIPTION	DATE	BY
6			
5			
4			
3			
2			
1			

REVISIONS (OR CHANGE NOTICES)

DESIGNED BY: NA
DETAILED BY: LH
CHECKED BY: RM

APPROVAL RECOMMENDATION: BRIDGE DESIGN ENGINEER — DATE 2-19-02
APPROVED: DESIGN BUREAU CHIEF — DATE

NEW MEXICO STATE HIGHWAY & TRANSPORTATION DEPARTMENT

42 IN. CONCRETE WALL BARRIER OVER CULVERT

7.22781

CWB-42-6/6 SHEET 21F OF 27

CWB42F.dwg

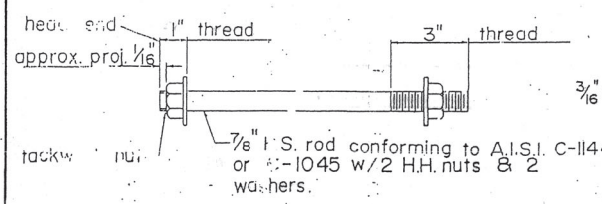

ALTERNATE POST ANCHOR BOLT DETAIL
(TYPE A & B RAIL)

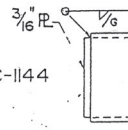

END PL DETAIL

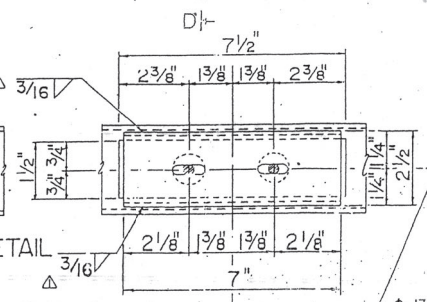

SECTION E-E

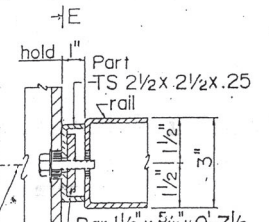

℄ 13/16" x 1 5/16" horiz. slotted hole in part TS 2 1/2 x 2 1/2 x .25. Tap 3/4"-10 NC. in bar 1 1/2 x 5/8". 1 5/16" O.H. in rail & 13/16" x 1 5/16" vertical slotted hole in post.

SECTION D-D

RAIL TO POST CONNECTION

7/8" H.S. bolts w/2 washers each, galvanized. 1" x 2" horizontal slotted hole in 5/16" PL

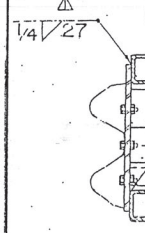

SECTION B-B

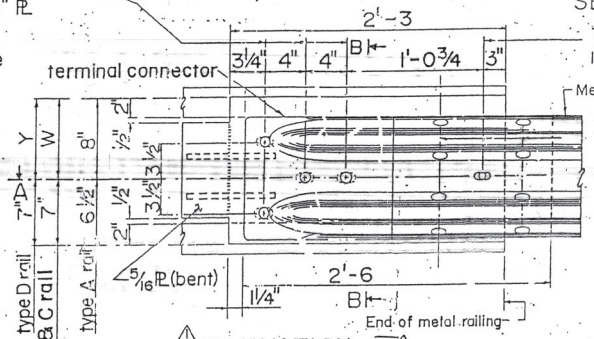

ELEVATION

Y = H1 - H2 + (1'-3 1/2)
W = H1 - H2 + (1'-2)

See sheet 3 for dimensions H1 & H2

Note: Lap metal barrier and terminal connector so that the projecting edge faces away from approaching normal ins

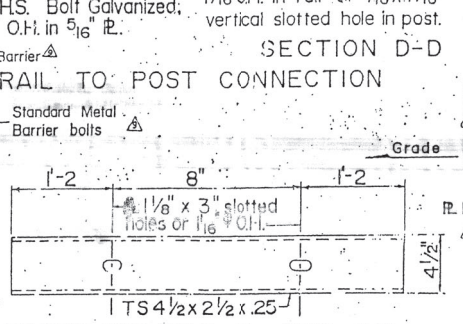

SPLICE MEMBER FOR TS 5 x 3 x .1875 RAIL

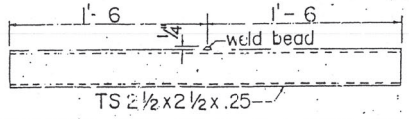

SPLICE MEMBER FOR TS 3 x 3 x .1875 RAIL

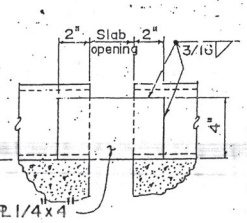

DETAIL OF GUTTER AT DECK JOINT

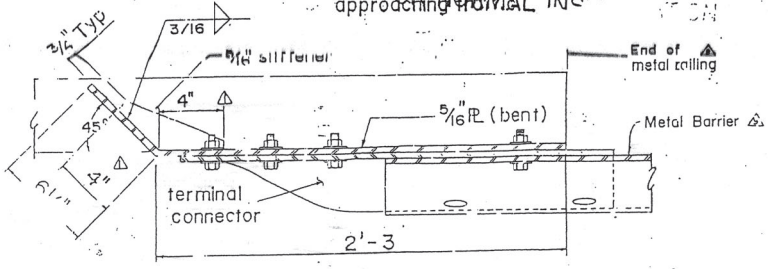

SECTION A-A

TAL BARRIER CONNECTION DETAILS

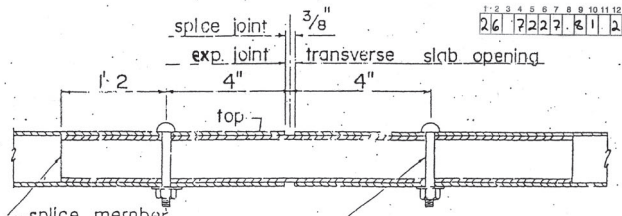

splice joint	use 1 1/16" φ O.H.
exp. joint	use 1 1/8" x 3" slotted hole

RAIL JOINT DETAIL

CITY PROJ. # 722781

GENERAL NOTES

1. Design in accordance with 1977 AASHTO Specifications.
2. All rails to be parallel to grade unless otherwise shown.
3. See structure details for post spacing and other details not shown.
4. Details shown are for steel only. A steel or aluminum railing of an alternate design may be substituted for the railing shown on these sheets provided the alternate design is approved by the Engineer before fabrication.
5. Steel rail tubes shall conform to the requirements of ASTM designation A500 or A501. Post spacing shown on the plans is based on the use of TS5x3x.1875 conforming to the requirements of ASTM designation A500 grade B. If the contractor elects to use tubes of another grade, the post spacing shown on the plans will be revised by the Bridge Design Section.
6. Metal railing will be paid for at the unit price per foot.
7. Terminal connector shall be AASHTO-ARBA STD HM-TF 13/RE-8, shall conform to AASHTO Specification M-180 be galvanized and of class B sheet thickness
8. Caulking compound used under gutter channels and rail post base plates shall be a single component cold applied, non sagging compound having either a silicone rubber base or a synthetic rubber base of the chemically curing type and shall conform to the requirements of Federal Specifications TT-S-00153 A or TT S 230C.

FHWA Region No.	STATE		SHEET NO	TOTAL SHEETS
6	NEW MEXICO			

IDENT. NO.	DESCRIPTION	DATE	BY
	STRENGTHENED RAIL-POST CONNECTION	2-6-80	E.R.D.
	CHANGED SERIAL DESIGNATION	10-26-79	E.R.D.
	ADDED TYPE "C" TO CONNECTION DETAIL	4-19-85	P.A.Z.
	CHANGE GUARDRAIL TO METAL BARR. DEL. BRIDGE	3-9-85	P.A.Z.
	ADDED GENERAL NOTE NO. 8	10-25-82	E.R.D.
	UPDATE 3/4" THREAD	3-15-81	E.R.D.

REVISIONS (OR CHANGE NOTICES)

NEW MEXICO
STATE HIGHWAY DEPARTMENT

METAL RAILING
GENERAL NOTES & TYPICAL DETAILS

DESIGNED BY CR
DRAWN BY G.V.
CHECKED BY M.G.

APPROVAL H. Tackett 2-16-76
RECOMMENDED BRIDGE ENGINEER DATE
APPROVED Robert Campbell Jr. 3-2-76
ENGINEER OF DESIGN DATE

SERIAL BMR-001-10

PRJ. NO. 722781

SHEET 22 OF 27

THIS SERIAL REVISED 4-9-82

SCANNED BY MESA REPRO

F.H.W.A. REGION NO. 6	SHEET NO.
NEW MEXICO PROJECT NO.	

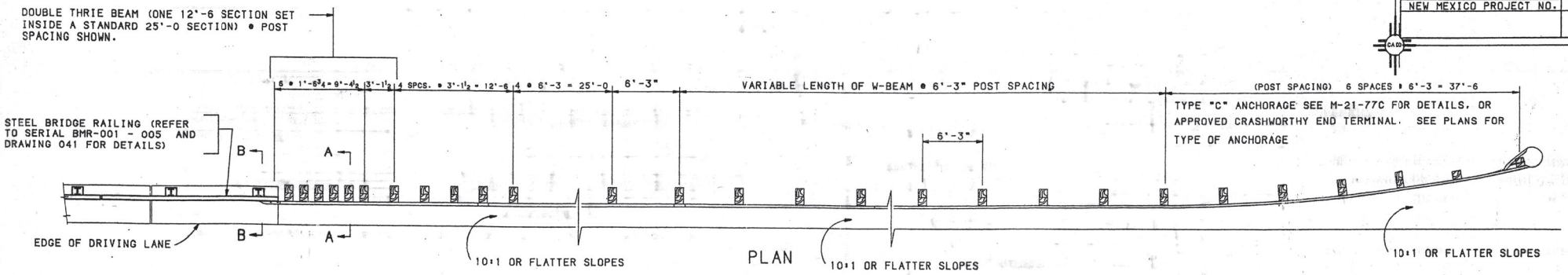

PLAN

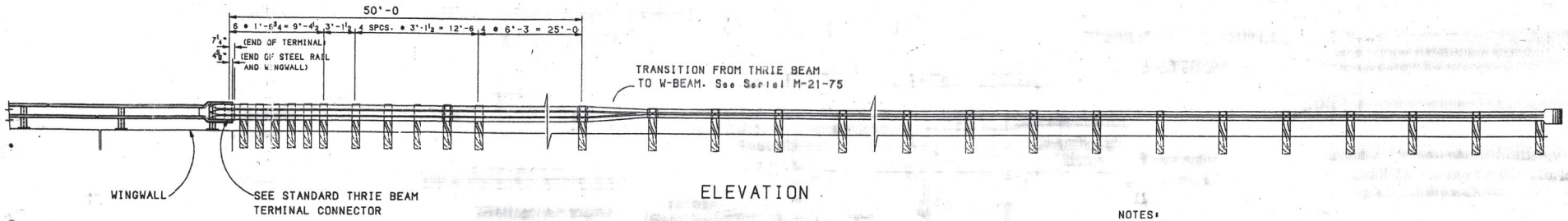

ELEVATION

NOTES:

1. FOR DETAILS OF TYPE 'C' ANCHORAGE SEE M-21-77C.
2. SEE STANDARDS M-21-62, M-21-75, AND CWB-75 FOR ADDITIONAL DETAILS.
3. REFER TO DRAWING 041 FOR DETAILS PERTAINING TO THE CONNECTION PLATE AND MODIFICATIONS MADE TO THE NEW STEEL BRIDGE RAILING TO ACCOMMODATE THE THRIE BEAM RAILING.

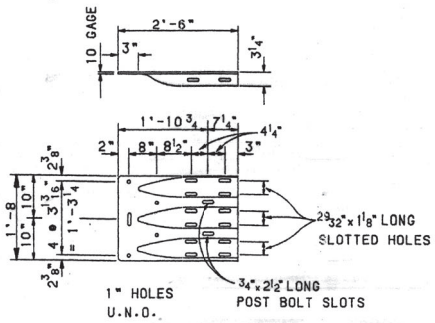

STANDARD THRIE BEAM TERMINAL CONNECTOR

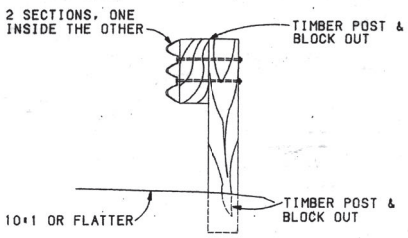

SECTION A-A

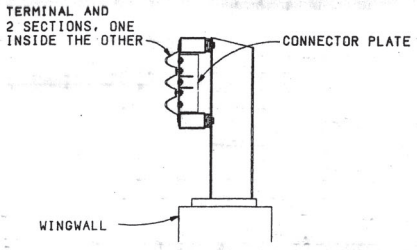

SECTION B-B

1 2 3 4 5 6 7 8 9 10 11 12 13 14 15
26 7 2 2 7 . 8 1 2 3 0 5

NO.	DESCRIPTION	DATE	BY
6			
5			
4			
3			
2			
1			

REVISIONS (OR CHANGE NOTICES)

NEW MEXICO STATE HIGHWAY AND TRANSPORTATION DEPARTMENT

TRANSITION DETAILS
STEEL BRIDGE RAILING
TO THRIE BEAM TO W-BEAM
(APPROACH)

722781

LAYOUT BY TRAFFIC DES.
DRAWN BY J.J.E. 10/94
CHECKED BY S.J.K. 10/94
APPROVED: TRAFFIC DESIGN ENGINEER — DATE 5/10/94
APPROVED: BUREAU CHIEF — DATE

DRAWING 036 SHT. 2 OF 2

SHEET 13 OF 27

PRJ. NO. 722781

F.H.W.A. Region No.	STATE		SHEET NO.	TOTAL SHEETS
8	NEW MEXICO			

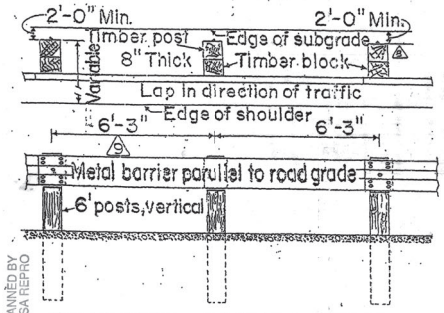

ROADSIDE INSTALLATION

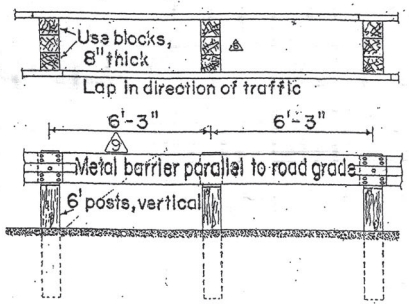

METAL BEAM RIGID BARRIER INSTALLATION

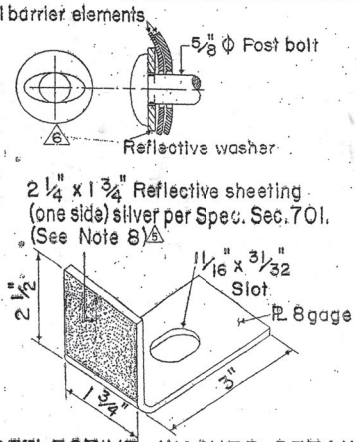

REFLECTIVE WASHER DETAIL

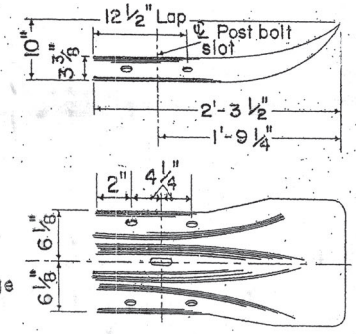

STANDARD TERMINAL SECTION

NOTES

1. Top of posts shall be flat.
2. Unless otherwise provided, rail elements and terminal sections shall be .105 inch thick. Rail elements may be furnished in 12 1/2 ft. or 25 ft. lengths.
3. Where the radius of curved alignment is 150 ft. or less, the individual railing sections shall be shop-formed by the manufacturer to fit the curvature.
4. Timber blocks to be 8" x 8" x 14" high, except where otherwise noted. Blocks and posts may be rough or S4S.
5. Contractor to use 8" square post.
6. Rail element shall conform to AASHTO Spec. M180, Class A, Type I., unless otherwise specified.
7. Reflective washers shall be placed facing approaching traffic at 25 ft. intervals on one-way and divided roadways. On two-way roadways, reflective washers shall be placed at 12 1/2 ft. intervals with every 2nd washer facing opposing traffic. Rectangular flat washers to be placed at all other post bolts.
8. Amber reflective washers in lieu of silver shall be used when the metal barrier is on the left side to approaching traffic on multi-lane facilities.

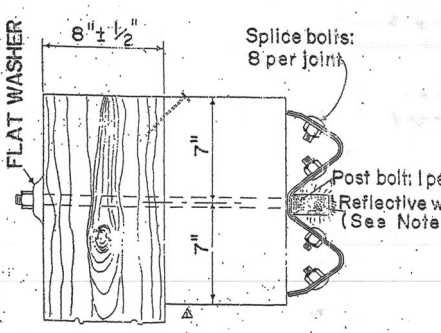

SECTION AT JOINT, SINGLE RAIL

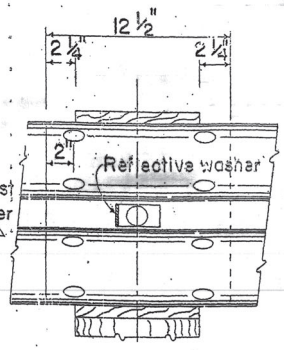

JOINT ASSEMBLY

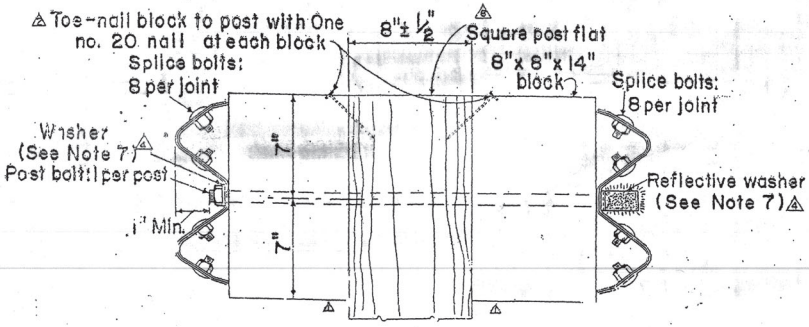

SECTION AT JOINT, METAL RIGID BARRIER

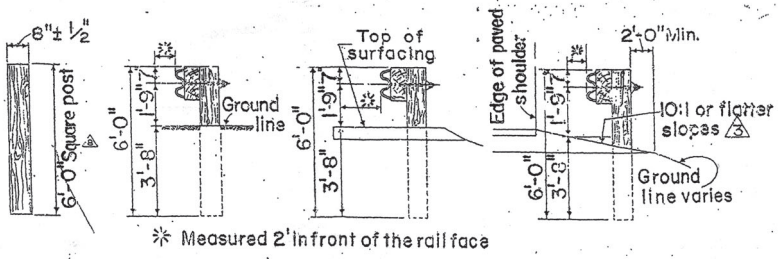

PLACEMENT PROCEDURES

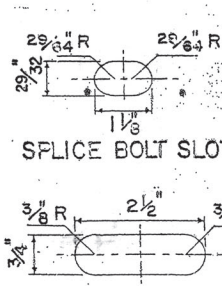

SPLICE BOLT SLOT

POST BOLT SLOT

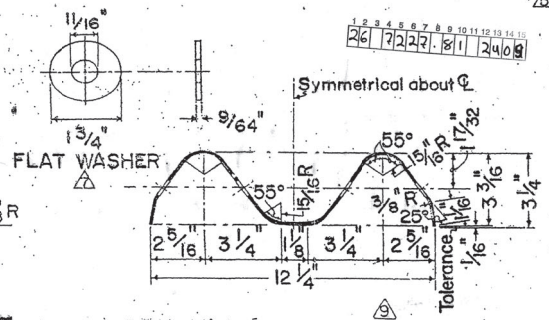

FLAT WASHER

SECTION THRU METAL BARRIER ELEMENT

5	CHANGED GUARDRAIL TO METAL BARRIER	2-1-85	D.R.R.
4	Added flat washer-Added note on sq. post made	2-15-83	J.L.
3	ADDED NOTE 8 - ADDED NEW BOLT FIGURE (post bolt)	5-5-80	J.S.S.
2	REVISED SLOPES - ADDED NOTE 7	8-29-77	J.R.
1	REMOVED LOWER NAILS - REVISED NAILING NOTE	8/2/77	T.G.M.
IDENT. NO.	DESCRIPTION	DATE	BY

REVISIONS (OR CHANGE NOTICES)

NEW MEXICO
STATE HIGHWAY DEPARTMENT

METAL BARRIER MATERIALS AND PLACEMENT PROCEDURES

DESIGNED BY L.A.L.	APPROVAL	8-4-75
DRAWN BY J.L.M.	RECOMMENDED - TRAFFIC ENGINEER	DATE
CHECKED BY L.A.L.	APPROVED ENGINEER OF DESIGN	8-4-75 DATE

SERIAL M-21-62 SHEET 1 OF 1

722281

PRJ. NO. 722781

SHEET 24 OF 27

THIS SERIAL REVISED. 02-01-85

F.H.W.A. Region No.	STATE		SHEET NO.	TOTAL SHEETS
6	NEW MEXICO			

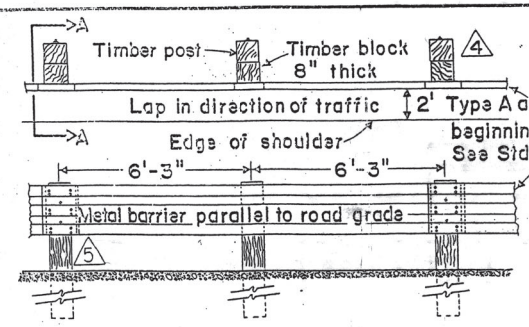

ROADSIDE INSTALLATION

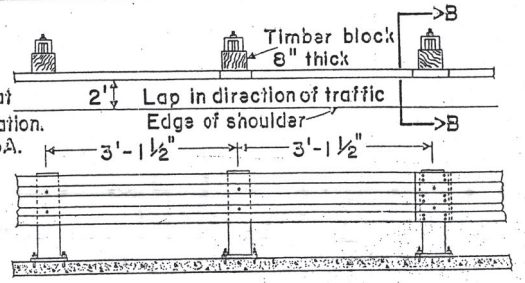

BOX CULVERT INSTALLATION
(See note 9)

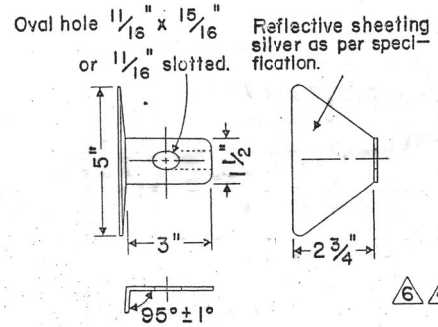

ALTERNATE REFLECTIVE WASHER DETAIL

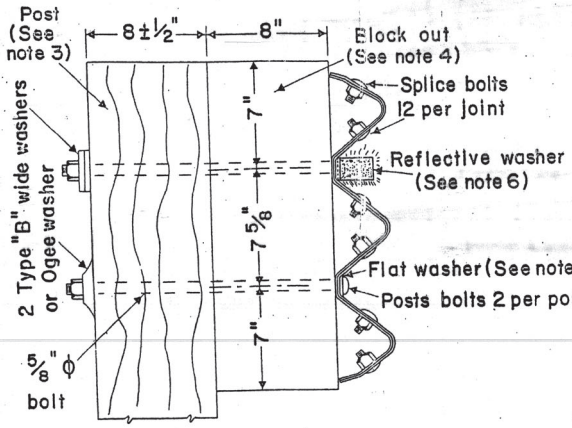

ROADSIDE SECTION AT JOINT

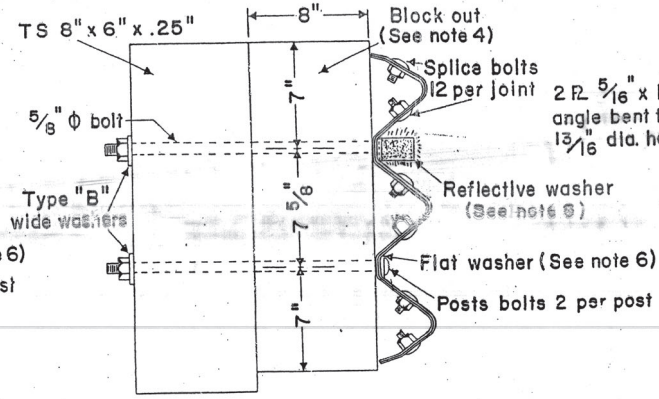

BOX CULVERT SECTION AT JOINT

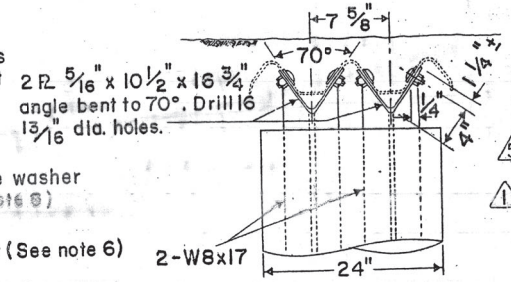

THRIE BEAM
DETAILS OF TYPE A ANCHOR
(See note 7)

NOTES

1. All material and workmanship shall be done in accordance to the N.M. State Highway Department Specifications.
2. Unless otherwise provided, rail elements shall be .105 inches thick. Rail elements may be furnished in 12-1/2 ft. or 25 ft. lengths.
3. (6)(4) Contractor to use 8"x8"x6' 6" rough post or surfaced on four sides (S4S), W6x 8.5x6' 6" steel post or W6x9.0x 6' 6" steel post.
4. (6) Timber blocks shall be 8"x8"x1' 9 5/8" high. Blocks may rough or (S4S). Steel block shall W6x8.5x1' 9.5" or W6x9x1' 9.5".
5. Timber posts and blocks are to be treated as specified.
6. Reflective washers as per this sheet or standard M-21-62 shall be placed every 25 ft. on upper bolt slot of metal barrier elements. (5) Flat washers to be placed at all other bolt slots.
7. (1) For additional details see standards M-21-62, M-21-77, M-21-65A.
8. Rail elements shall be steel conforming to the requirements of AASHTO M180, Class A, Type I, except as shown otherwise on this sheet.
9. For Box Culvert installation see standard M-21-~~87A~~ 75-1/2
10. (2) When steel posts and steel blocks are used, a 1 foot rail section must be placed behind rail elements at intermediate posts (non-splice-posts).

9-6-00 - [illegible]

THIS SERIAL REVISED: ~~3-21-85~~

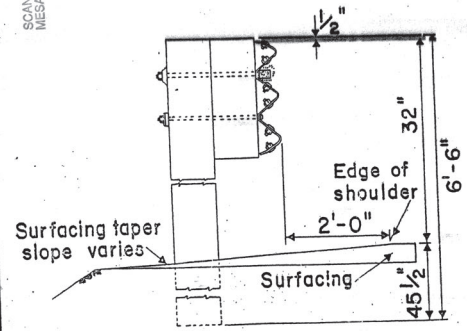

SECTION A-A

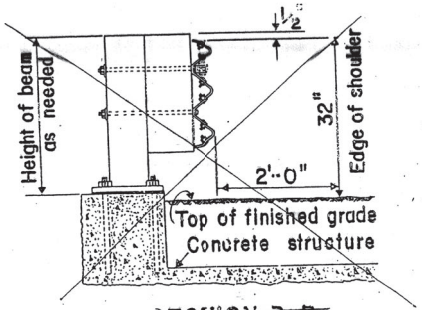

~~SECTION B-B~~
DO NOT USE - ~~PARAPET~~ MOUNT

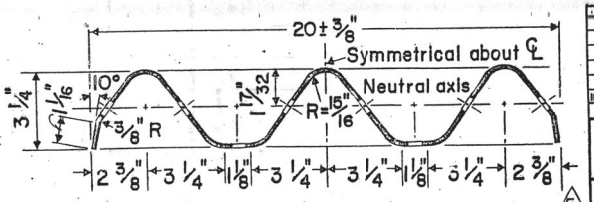

SECTION THRU RAIL ELEMENT

IDENT NO.	DESCRIPTION	DATE	BY
6	ADDED TO NOTES 3 & 4	3-21-85	DRR.
5	CHANGED GUARDRAIL TO METAL BARRIER	2-4-85	DRR.
4	Changed round posts to square posts. Revised note 3	11-18-83	PWL
3	CHANGED SHEET 1 OF 1 TO 1 OF 2	9-20-83	C.V.T.
2	ADDED NOTE 10.	11/15/78	J.R.
1	REVISED NOTE 7.	12/28/77	J.R.

REVISIONS (OR CHANGE NOTICES)

NEW MEXICO
STATE HIGHWAY DEPARTMENT

METAL BARRIER THRIE BEAM ROADSIDE AND BOX CULVERT

DESIGNED BY L.A.L.
DRAWN BY J.L.M.
CHECKED BY L.A.L.

APPROVAL RECOMMENDED - TRAFFIC ENGINEER G. Fukui Bell DATE 7-13-76
APPROVED ENGINEER OF DESIGN [illegible] DATE 7-19-76

SERIAL M-21-75 (3) SHEET 1 OF 2

SHEET 25 OF 27

PRJ. NO 722781

F.H.W.A. Region No.	STATE	SHEET NO.	TOTAL SHEETS
6	NEW MEXICO		

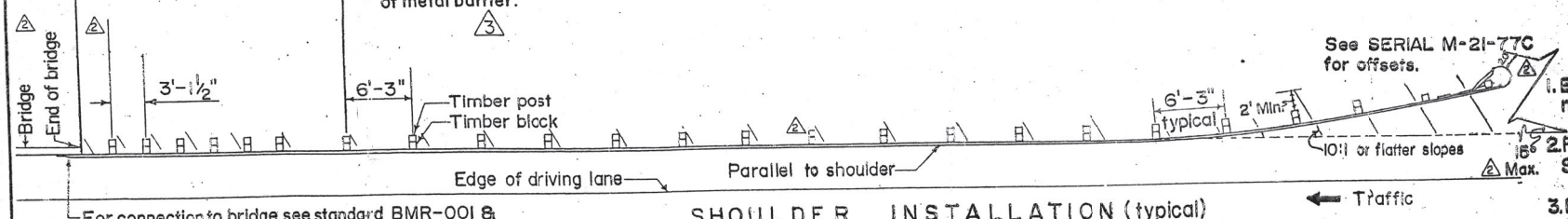

SHOULDER INSTALLATION (typical)
CASE "A"

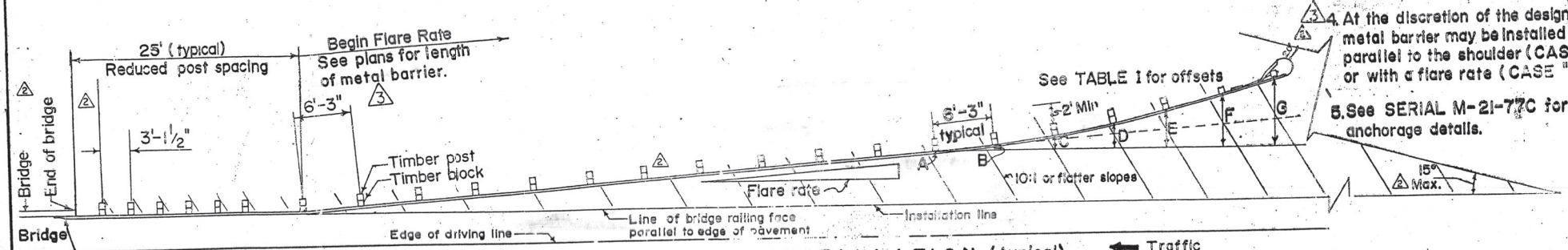

SHOULDER INSTALLATION (typical)
CASE "B"

GENERAL NOTES

1. Build metal barrier at structures when noted on plans.
2. For metal barrier details, see New Mexico Standard M-21-62.
3. For special installations, Project Engineer will determine the exact radius of rail and location of posts and notify contractor before material is fabricated.
4. At the discretion of the designer, the metal barrier may be installed parallel to the shoulder (CASE "A") or with a flare rate (CASE "B").
5. See SERIAL M-21-77C for anchorage details.

TABLE I

CASE "B" FLARE RATE	50:1	25:1
A	0.0'	0.0'
B	0.24'	0.36'
C	0.69'	0.94'
D	1.38'	1.75'
E	2.30'	2.80'
F	3.43'	4.05'
G	4.75'	5.50'

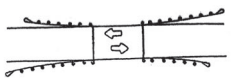

Two-Lane Highway

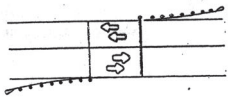

Multi-Lane Single-Structure

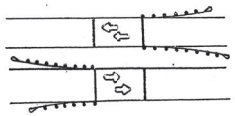

Multi-Lane Double Structure

APPLICATION

1 2 3 4 5 6 7 8 9 10 11 12 13 14 15
26 7 2 2 7 8 1 2 6 0 S

THIS SERIAL REVISED: 2-5-95

IDENT. NO.	DESCRIPTION	DATE	BY
4			
3			
2	CHANGED GUARDRAIL TO METAL BARRIER	2-5-65	D.R.R.
1	Revise Table I, Posts And Notes	11-22-83	P.L.
0	REDREW STANDARD	1-25-82	J.R.

REVISIONS (OR CHANGE NOTICES)

NEW MEXICO
STATE HIGHWAY DEPARTMENT

METAL BARRIER AT BRIDGE APPROACHES

DESIGNED BY J.R.
DRAWN BY G.D.
CHECKED BY N.

APPROVAL RECOMMENDED — ENGINEER — DATE
APPROVED — ENGINEER OF DESIGN — DATE

SERIAL M-21-77 SHEET 1 OF 2

PRJ. No. 722781 SHEET 26 OF 27 SHEET NO. 2

F.H.W.A. Region No.	STATE	SHEET NO.	TOTAL SHEETS
6	NEW MEXICO		

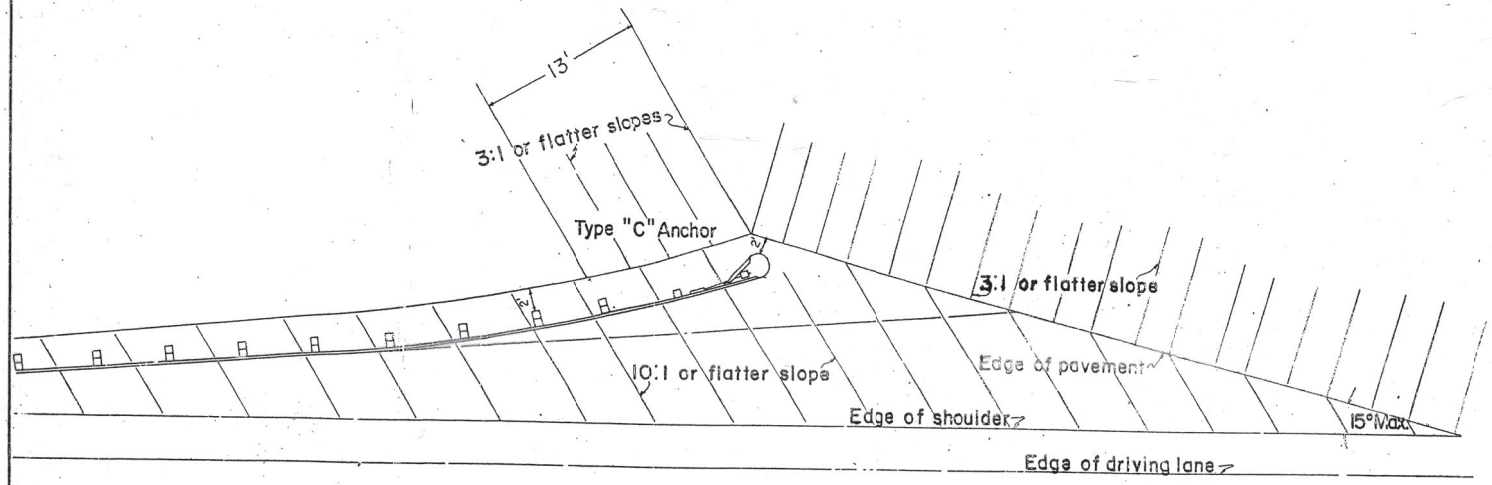

SLOPE DETAIL (2)

GENERAL NOTES

(1) 1. For additional details see Serials M-21-62, M-21-77 sheet 1 of 2 and M-21-77C.

2. The embankment material shall be compacted to 95 percent of maximum density.

3. Unless otherwise specified on the plans, the cost of the embankment material and the placing thereof shall be included in the unit bid price for metal barrier. (3)

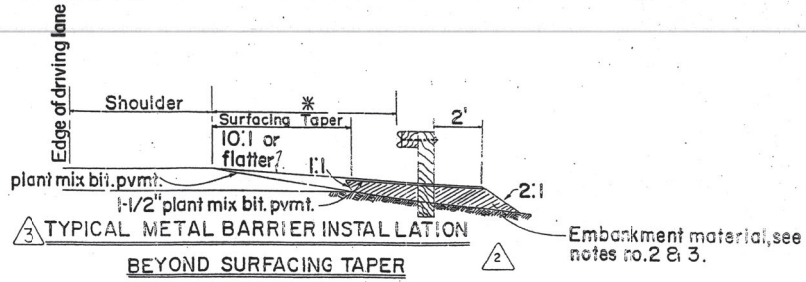

(3) TYPICAL METAL BARRIER INSTALLATION BEYOND SURFACING TAPER (2)

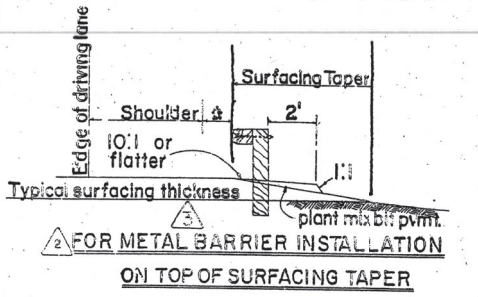

(3) (2) FOR METAL BARRIER INSTALLATION ON TOP OF SURFACING TAPER

* See plans for offset distance.

1 2 3 4 5 6 7 8 9 10 11 12 13 14 15
2 6 7 2 2 7 8 1 2 7 0 5

THIS SERIAL REVISED: 2-7-85

IDENT. NO.	DESCRIPTION	DATE	BY
5			
4			
3			
2	CHANGED GUARDRAIL TO METAL-BARRIER	2/7/85	D.R.R.
1	DETAIL LABELS WERE CHANGED	3/20/84	C.V.T.
	REVISED GENERAL NOTES	3/20/84	C.V.T.

REVISIONS (OR CHANGE NOTICES)

NEW MEXICO
STATE HIGHWAY DEPARTMENT

(3) APPROACH SLOPE PREPARATION
METAL BARRIER INSTALLATION

DESIGNED BY P.L.
DRAWN BY F.L.P.
CHECKED BY P.L.

APPROVAL RECOMMENDED — TRAFFIC ENGINEER — DATE
APPROVED — ENGINEER OF DESIGN — DATE

SERIAL M-21-77 SHEET 2 OF 2

PRJ. NO. 722781 SHEET 27 OF 27 SHEET NO.