RECORD DRAWING

CONSTRUCTION PLANS
for
OCOTILLO SUBDIVISION
ALBUQUERQUE, NEW MEXICO
APRIL, 2004

◦ LEGEND ◦

MATERIALS
- CONCRETE
- RIP-RAP

LINES
- SUBDIVISION BOUNDARY
- PROPERTY LINE (PLAN)
- PROPERTY LINE (SECTION)
- CENTERLINE
- EASEMENT LINE
- MATCH LINE
- SECTION CUT LINE (A A)

EARTHWORK

	EXISTING	NEW
CONTOUR LINE	25	25
SPOT ELEVATION		
PROJECT / PHASE BOUNDARY		
FLOW LINE		
DIRECTION OF FLOW		

MISCELLANEOUS UTILITIES
- GAS LINE (G)
- UNDERGROUND TELEPHONE (UT)
- UNDERGROUND ELECTRICAL (UE)
- STORM DRAIN (SD)
- STORM DRAIN MANHOLE
- STORM DRAIN INLET

SANITARY SEWER
- SANITARY SEWER LINE (SAS)
- SANITARY SEWER MANHOLE
- SAS SERVICE CONNECTIONS
- SAS CAP OR PLUG
- ENCASEMENT

WATER
- WATER LINE (W)
- WATER SERVICE CONNECTIONS
- GATE VALVE
- FIRE HYDRANT
- BUTTERFLY VALVE
- REDUCER
- WATER PRESSURE ZONE BOUNDARY

WATER FITTINGS
- CAPS AND PLUGS
- ELBOW
- CROSS
- TEE

MISCELLANEOUS
- CHAIN LINK FENCE
- FIELD FENCE
- COMMON YARD WALL
- RETAINING WALL
- POWER OR TELEPHONE POLE

INDEX OF DRAWINGS

2 CERTIFICATE OF SUBSTANTIAL COMPLIANCE

I, J. GRAEME MEANS, NMPE 13676, OF THE FIRM JEFF MORTENSEN & ASSOCIATES, INC., HEREBY CERTIFY THAT THE INFRASTRUCTURE CONSTRUCTED AS PART OF THIS PROJECT HAS BEEN INSPECTED BY ME OR PERSONNEL UNDER MY DIRECT SUPERVISION AND, TO THE BEST OF MY KNOWLEDGE AND BELIEF, HAS BEEN CONSTRUCTED IN ACCORDANCE WITH THE PLANS AND SPECIFICATIONS AND THE ORIGINAL DESIGN INTENT OF THE CITY ENGINEER APPROVED PLANS. THE RECORD INFORMATION EDITED ONTO THIS ORIGINAL DESIGN DOCUMENT HAS BEEN OBTAINED BY OR UNDER MY DIRECT SUPERVISION AND IS TRUE AND CORRECT TO THE BEST OF MY KNOWLEDGE AND BELIEF. THIS RECORD INFORMATION IS NOT NECESSARILY COMPLETE AND INTENDED ONLY TO VERIFY SUBSTANTIAL COMPLIANCE OF THE DESIGN INTENT OF THIS PROJECT. THOSE RELYING ON THIS DOCUMENT ARE ADVISED TO OBTAIN INDEPENDENT VERIFICATION OF ITS ACCURACY BEFORE USING IT FOR ANY OTHER PURPOSE. THIS CERTIFICATION IS SUBMITTED IN SUPPORT OF A REQUEST FOR ACCEPTANCE OF THE PROJECT BY THE CITY ENGINEER.

J. Graeme Means
J. GRAEME MEANS, NMPE 13676

02/18/2005
DATE

J. GRAEME MEANS STATE OF NEW MEXICO 13676 PROFESSIONAL ENGINEER

1 2 3 4 5 6 7 8 9 10 11 12 13 14 15
2 6 7 2 9 1 . 8 1 1 0 5

APPROVED AS RECORD DRAWINGS
DESIGN REVIEW SECTION
CITY CONSTRUCTION ENGINEER
DATE: 5/12/05

DRB PROJECT #1002885

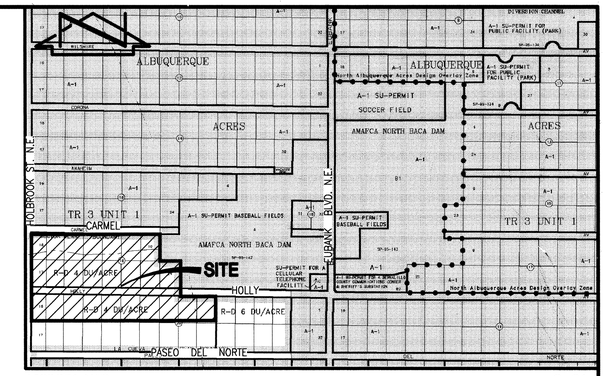

VICINITY MAP
SCALE: 1" = 750'

C-21

GENERAL NOTES:

1. ALL WORK DETAILED ON THESE PLANS TO BE PERFORMED UNDER CONTRACT SHALL, EXCEPT AS OTHERWISE STATED OR PROVIDED FOR HEREON, BE CONSTRUCTED IN ACCORDANCE WITH THE CITY OF ALBUQUERQUE STANDARD SPECIFICATIONS-PUBLIC WORKS CONSTRUCTION-1986 - UPDATE NO. 7.
2. TWO (2) WORKING DAYS PRIOR TO ANY EXCAVATION, CONTRACTOR MUST CONTACT NEW MEXICO ONE CALL SYSTEM, 260-1990, (ALBUQUERQUE AREA) 1-800-321-ALERT (2537) (STATEWIDE) FOR LOCATION OF EXISTING UTILITIES.
3. IF ANY UTILITY LINES, PIPELINES, OR UNDERGROUND UTILITY LINES ARE SHOWN ON THESE DRAWINGS, THEY ARE SHOWN IN AN APPROXIMATE MANNER ONLY, AND SUCH LINES MAY EXIST WHERE NONE ARE SHOWN. IF ANY SUCH EXISTING LINES ARE SHOWN, THE LOCATION IS BASED UPON INFORMATION PROVIDED BY THE OWNER OF SAID UTILITY, AND THE INFORMATION MAY BE INCOMPLETE, OR MAY BE OBSOLETE BY THE TIME CONSTRUCTION COMMENCES. THE ENGINEER HAS CONDUCTED ONLY PRELIMINARY INVESTIGATION OF THE LOCATION, DEPTH, SIZE, OR TYPE OF EXISTING UTILITY LINES, PIPELINES, OR UNDERGROUND UTILITY LINES. THIS INVESTIGATION IS NOT CONCLUSIVE, AND MAY NOT BE COMPLETE, THEREFORE, MAKES NO REPRESENTATION PERTAINING THERETO, AND ASSUMES NO RESPONSIBILITY OR LIABILITY THEREFOR. THE CONTRACTOR SHALL INFORM ITSELF OF THE LOCATION OF ANY UTILITY LINE, PIPELINE, OR UNDERGROUND UTILITY LINE IN OR NEAR THE AREA OF THE WORK IN ADVANCE OF AND DURING EXCAVATION WORK. THE CONTRACTOR IS FULLY RESPONSIBLE FOR ANY AND ALL DAMAGE CAUSED BY ITS FAILURE TO LOCATE, IDENTIFY AND PRESERVE ANY AND ALL EXISTING UTILITIES, PIPELINES, AND UNDERGROUND UTILITY LINES. IN PLANNING AND CONDUCTING EXCAVATION, THE CONTRACTOR SHALL COMPLY WITH STATE STATUTES, MUNICIPAL AND LOCAL ORDINANCES, RULES AND REGULATIONS, IF ANY, PERTAINING TO THE LOCATION OF THESE LINES AND FACILITIES.
4. SHOULD A CONFLICT EXIST BETWEEN THESE PLANS AND ACTUAL FIELD CONDITIONS, THE CONTRACTOR SHALL PROMPTLY NOTIFY THE ENGINEER IN WRITING SO THAT THE CONFLICT CAN BE RESOLVED WITH A MINIMUM AMOUNT OF DELAY FOR ALL PARTIES.
5. THE CONTRACTOR SHALL MAINTAIN ACCESS TO ADJACENT PROPERTIES DURING CONSTRUCTION.
6. ALL WORK ON THIS PROJECT SHALL BE PERFORMED IN ACCORDANCE WITH APPLICABLE FEDERAL, STATE AND LOCAL LAWS, RULES AND REGULATIONS CONCERNING SAFETY AND HEALTH.
7. ALL UTILITIES AND UTILITY SERVICE LINES SHALL BE INSTALLED PRIOR TO PAVING.
8. BACKFILL COMPACTION SHALL BE ACCORDING TO SPECIFIED STREET USE.
9. TACK COAT REQUIREMENTS SHALL BE DETERMINED DURING CONSTRUCTION BY THE PROJECT ENGINEER.
10. SIDEWALKS AND WHEELCHAIR RAMPS WITHIN THE CURB RETURNS SHALL BE CONSTRUCTED WHEREVER A NEW CURB RETURN IS CONSTRUCTED.
11. IF CURB IS DEPRESSED FOR A DRIVEPAD OR A HANDICAP RAMP, THE DRIVEPAD OR RAMP SHALL BE CONSTRUCTED PRIOR TO ACCEPTANCE OF THE CURB AND GUTTER.
12. ALL STORM DRAINAGE FACILITIES SHALL BE COMPLETED PRIOR TO FINAL ACCEPTANCE.
13. CONTRACTOR SHALL COORDINATE WITH THE WATER SYSTEM DIVISION FOR THE EXECUTION OF THE VALVE SHUT OFF PLAN, NOT LESS THAN SEVEN (7) WORKING DAYS IN ADVANCE OF ANY WORK THAT MAY AFFECT THE EXISTING PUBLIC WATER UTILITIES. ONLY WATER SYSTEM DIVISION PERSONNEL SHALL OPERATE EXISTING VALVES. REFER TO SECTION 18 OF THE SPECIFICATIONS. THE WATER SYSTEM DIVISION PHONE NUMBER IS 857-8200.
14. CONTRACTOR SHALL NOTIFY THE CITY SURVEYOR NOT LESS THAN SEVEN (7) DAYS PRIOR TO STARTING WORK IN ORDER THAT THE CITY SURVEYOR MAY TAKE NECESSARY MEASURES TO INSURE THE PRESERVATION OF SURVEY MONUMENTS. CONTRACTOR SHALL NOT DISTURB PERMANENT SURVEY MONUMENTS WITHOUT THE CONSENT OF THE CITY SURVEYOR AND SHALL NOTIFY THE CITY SURVEYOR AND BEAR THE EXPENSE OF REPLACING ANY THAT MAY BE DISTURBED WITHOUT PERMISSION. REPLACEMENT SHALL BE DONE ONLY BY THE CITY SURVEYOR. WHEN A CHANGE IS MADE IN THE FINISHED ELEVATION OF THE PAVEMENT OF ANY ROADWAY IN WHICH A PERMANENT SURVEY MONUMENT IS LOCATED, CONTRACTOR SHALL, AT HIS OWN EXPENSE, ADJUST THE MONUMENT COVER TO THE NEW GRADE UNLESS OTHERWISE SPECIFIED. REFER TO SECTION 4.4 OF THE SPECIFICATIONS.
15. FIVE (5) WORKING DAYS PRIOR TO BEGINNING CONSTRUCTION THE CONTRACTOR SHALL SUBMIT TO THE CONSTRUCTION COORDINATION DIVISION A DETAILED CONSTRUCTION SCHEDULE. TWO (2) WORKING DAYS PRIOR TO CONSTRUCTION THE CONTRACTOR SHALL OBTAIN A BARRICADING PERMIT FROM THE CONSTRUCTION COORDINATION DIVISION. CONTRACTOR SHALL NOTIFY BARRICADE ENGINEER (924-3400) PRIOR TO OCCUPYING AN INTERSECTION. CONTRACTOR MUST REFER TO SECTION 19 OF THE STANDARD SPECIFICATION FOR TRAFFIC CONTROL.
16. ALL STREET STRIPING ALTERED OR DESTROYED SHALL BE REPLACED WITH PLASTIC REFLECTORIZED STRIPING BY CONTRACTOR TO EXISTING LOCATION OR AS INDICATED BY THIS PLAN SET.
17. **CAUTION: THESE DRAWINGS DO NOT INCLUDE NECESSARY COMPONENTS FOR CONSTRUCTION SAFETY WHICH SHALL REMAIN THE RESPONSIBILITY OF THE CONTRACTOR. ALL EXCAVATION, TRENCHING AND SHORING ACTIVITIES MUST BE CARRIED-OUT IN ACCORDANCE WITH OSHA 29 CFR 1926, SUBPART P-EXCAVATIONS.**
18. ANY WORK OCCURRING WITHIN AN ARTERIAL ROADWAY REQUIRES TWENTY-FOUR HOUR CONSTRUCTION.
19. CONTRACTOR SHALL MAINTAIN A GRAFFITI-FREE WORK SITE. CONTRACTOR SHALL PROMPTLY REMOVE ANY AND ALL GRAFFITI FROM EQUIPMENT, WHETHER PERMANENT OR TEMPORARY.
20. THIS SET OF PLANS SHOWS PRIVATE RETAINING WALLS THAT ARE NOT PART OF THIS WORK ORDER. THOSE WALLS MUST BE REVIEWED, APPROVED AND PERMITTED BY SEPARATE PROCESS. CONTACT 924-3956
21. WHEN APPLICABLE, CONTRACTOR SHALL SECURE "TOPSOIL DISTURBANCE PERMIT" FROM THE CITY AND/OR FILE A NOTICE OF INTENT (N.O.I.) WITH THE EPA PRIOR TO BEGINNING CONSTRUCTION.
22. THE CONTRACTOR SHALL MAINTAIN ACCESS TO ALL EXISTING RESIDENTS ALONG CARMEL AVENUE AT ALL TIMES.

JMA
JEFF MORTENSEN & ASSOCIATES, INC.
6010-B MIDWAY PARK BLVD. N.E.
ALBUQUERQUE NEW MEXICO 87109
ENGINEERS SURVEYORS (505) 345-4250
FAX: 505 345-4254 ESTABLISHED 1977

2002.050.48

REV.	SHEETS	CITY ENGINEER	DATE	USER DEPARTMENT	DATE	USER DEPARTMENT	DATE
2	1 – 25						

ENGINEERS STAMP & SIGNATURE

J. GRAEME MEANS NEW MEXICO 13676 REGISTERED PROFESSIONAL ENGINEER
04/21/2004

APPROVALS	ENGINEER	DATE
DRC Chairman		5-27-04
Transportation		4/30/04
Water/Wastewater		5/04/04
Hydrology	Brad L. Sylvia	4/30/04
C.I.P.		
Const. Mngmt.		
Const. Coord.		5-27-04

★★★★★★★★★★★★★★

APPROVED FOR CONSTRUCTION

6-04-04
City Engineer Date

City Project No. 729181

SHEET 1 OF 25

File Path: E:\MYAPDIR\1002885\A
File Name: 20504CV.DWG
Plot Date: 04-20-2004
Plot Time: 3:00 pm

SP #2003430380

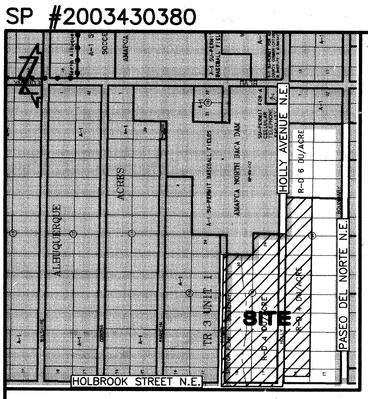

VICINITY MAP C-21

SCALE: 1" = 750'

DESIGNER DESIGN & DRAFT

DESERT RIDGE DEVELOPMENT, LLC
JASON & CINDY LYNN DASKALOS
OWNERS

PROJECTED
SEC. 16, T 11 N, R 4 E, N.M.P.M.
LOCATION

OCOTILLO
SUBDIVISION

2004032255
2004032255
Page: 1 of 6
03/11/2004 10:31A
Mary Herrera Bern. Co. PLAT R 32.00 Bk-2004C Pg-76

BK. 2004C PG. 76

COUNTY CLERK FILING DATA

SUBDIVISION PLAT OF
OCOTILLO SUBDIVISION
ALBUQUERQUE, BERNALILLO COUNTY, NEW MEXICO
FEBRUARY, 2004

DEDICATION AND FREE CONSENT

The subdivision hereon is with the free consent and in accordance with the desires of the undersigned owners and does hereby dedicate to the City of Albuquerque in fee simple the public street rights-of-way and grant the easements as shown, including the rights of ingress and egress and the right to trim interfering trees.

Donald G. Hoech, Managing Member, 2-23-04 Date
Desert Ridge, Development, LLC
(Existing Lots 10-23, Block 18 & Lots 10-15, Portion of 16, Block 20)
(Proposed Lots 1-30, 36-59, and 66-78, Ocotillo Subdivision)

ACKNOWLEDGEMENT

STATE OF NEW MEXICO)
SS
COUNTY OF BERNALILLO)

OFFICIAL SEAL
DEBIE LEBLANC TRUJILLO
NOTARY PUBLIC-STATE OF NEW MEXICO
My commission expires: 10-26-2007

This instrument was acknowledged before me on this 23rd day of February, 2004, by Donald G. Hoech, Managing Member, Desert Ridge Development, LLC.

Notary Public

Jason Daskalos, 2-23-04 Date
(Existing Lot 24, Block 18 & Lots 7-9, Block 20)
(Proposed Parcels B and C, Lots 31-35 and 60-65, Ocotillo Subdivision)

ACKNOWLEDGEMENT

STATE OF NEW MEXICO)
SS
COUNTY OF BERNALILLO)

OFFICIAL SEAL
DEBIE LEBLANC TRUJILLO
NOTARY PUBLIC-STATE OF NEW MEXICO
My commission expires: 10-26-2007

This instrument was acknowledged before me on this 23rd day of February, 2004, by Jason Daskalos.

Notary Public

Cindy Lynn Daskalos, 2-23-04 Date
(Existing Lot 24, Block 18 & Lots 7-9, Block 20)
(Proposed Parcels B and C, Lots 31-35 and 60-65, Ocotillo Subdivision)

ACKNOWLEDGEMENT

STATE OF NEW MEXICO)
SS
COUNTY OF BERNALILLO)

OFFICIAL SEAL
DEBIE LEBLANC TRUJILLO
NOTARY PUBLIC-STATE OF NEW MEXICO
My commission expires: 10-26-2007

This instrument was acknowledged before me on this 23rd day of February, 2004, by Cindy Lynn Daskalos.

Notary Public

DESCRIPTION

A certain tract of land located within the Corporate Limits of the City of Albuquerque, New Mexico, comprising Lots 10 through 24, inclusive, Block 18, and Lots 7 through 15, inclusive, Block 20, North Albuquerque Acres, Tract 3, Unit 1, as the same is shown and designated on the plat filed in the Office of the County Clerk of Bernalillo County, New Mexico on March 23, 1931, Book D, Page 132; together with that portion of Lot 16, Block 20, of said North Albuquerque Acres, Tract 3, Unit 1, as described by Quitclaim Deed executed on October 14, 2003, also known as right-of-way Parcel 9-4; together with that portion of Carmel Avenue N.E. vacated by 03DRB-01355; together with that portion of Holly Avenue vacated by 03DRB-01355 and 03DRB-01980, and being more particularly described as follows:

Beginning at the northeast corner of the parcel herein described, being the projected northeast corner of said Lot 10, Block 18, also being a point on the centerline of Carmel Avenue N.E.; thence S 00°11'25" W a distance of 263.37 feet to the southeast property corner of said Lot 10, being the northeast property corner of said Lot 23, Block 18, also being the northwest property corner of said Lot 24, Block 18, and also being a western property corner of Tract A, A.M.A.F.C.A. North Baca Dam, as the same is shown and designated on the plat filed in the Office of the County Clerk of Bernalillo County, New Mexico on May 15, 1985, Book C27, Page 52; thence S 89°31'54" E a distance of 164.85 feet to the northeast property corner of said Lot 24, Block 18, being a western property corner of said Tract A; thence S 00°12'51" W a distance of 293.88 feet to a point on the south right-of-way line of Holly Avenue N.E., being a point on the north property line of said Lot 9, Block 20; thence S 89°32'10" E a distance of 3.32 feet along said south right-of-way line to the northeast property corner of said Lot 9, Block 20, being the northwest property corner of said Lot 8, Block 20; thence S 89°30'40" E a distance of 329.55 feet along said south right-of-way line to the northeast property corner of said Lot 7, Block 20, being the northwest property corner of Lot 6, Block 20, of said North Albuquerque Acres, Tract 3, Unit 1; thence S 00°31'32" W a distance of 234.73 feet to the southeast corner of the parcel herein described, being the southeast property corner of said Lot 7, Block 20, also being the southwest property corner of said Lot 6, Block 20, also being the northeast corner of Lot 26, Block 20 of said North Albuquerque Acres, Tract 3, Unit 1, also known as right-of-way Parcel 10-5, and also being the northwest corner of Lot 27, Block 20 of said North Albuquerque Acres, Tract 3, Unit 1, also known as right-of-way Parcel 10-6; thence N 89°28'28" W a distance of 660.49 feet to the southeast property corner of said Lot 11 Block 20, also being the southwest property corner of said Lot 10 Block 20, also being the northeast corner of Lot 22, Block 20 of said North Albuquerque Acres, Tract 3, Unit 1, also known as right-of-way Parcel 10-2, and also being the northwest corner of Lot 23, Block 20 of said North Albuquerque Acres, Tract 3, Unit 1, also known as right-of-way Parcel 10-3; thence N 89°32'54" W a distance of 823.18 feet to the southeast property corner of said Lot 16 Block 20, also known as right-of-way Parcel 9-4, also being the southwest property corner of said Lot 15 Block 20, also being the northeast corner of Lot 17, Block 20 of said North Albuquerque Acres, Tract 3, Unit 1, also known as right-of-way Parcel 9-4, and also being the northwest corner of Lot 18, Block 20 of said North Albuquerque Acres, Tract 3, Unit 1, also known as right-of-way Parcel 9-4-B; thence N 89°55'27" W a distance of 38.65 feet to the southwest corner of the property herein described, being a property corner as described by said Quitclaim Deed executed on October 14, 2003, also being a point common to the property lines of said Lots 16 and 17, Block 20; thence along an arc of a curve to the right with Delta = 90°41'57", R = 17.50 feet and L = 27.70 feet, (Chord Bearing = N 44°33'55" W, Chord Length = 24.90 feet) to a property corner as described by said Quitclaim Deed executed on October 14, 2003; thence N 00°01'30" E a distance of 217.01 feet to a point on the north property line of said Lot 16, Block 20, being a point on the south right-of-way line of Holly Avenue N.E.; thence N 89°32'10" W a distance of 108.39 feet to the projected point of intersection of said south right-of-way line with the centerline of Holbrook Street N.E.; thence N 00°06'30" E a distance of 557.27 feet along said centerline to the northwest corner of the parcel herein described, being the projected point of intersection of said centerline with the centerline of Carmel Avenue N.E.; thence S 89°32'10" E a distance of .1153.44 feet along said centerline of Carmel Avenue N.E. to the point of beginning and containing 24.1508 acres more or less.

THIS IS TO CERTIFY THAT TAXES ARE CURRENT AND PAID ON UPC # [illegible] See Certificate
PROPERTY OWNER OF RECORD: Desert Ridge, Donald Hoech, Jaspas Gen. Ptn., R.R. Trujillo, Real Estate, Solomon Kenneth, Beauchamp Martha
BERNALILLO COUNTY TREASURER'S OFFICE
Arthur Kavanaugh 3/10/04
Clark, Bates, & Sierra Construction, etc.

DRB PROJECT NUMBER 1002885

APPLICATION NUMBER 03DRB-01354, 03DRB-01355, 03DRB-01356

APPROVALS:

DRB CHAIRPERSON, PLANNING DEPARTMENT, CITY OF ALBUQUERQUE, NEW MEXICO 3/10/04 DATE

UTILITIES DEVELOPMENT, CITY OF ALBUQUERQUE, NEW MEXICO 3-10-04 DATE

CITY ENGINEER, CITY OF ALBUQUERQUE, NEW MEXICO 3/10/04 DATE

A.M.A.F.C.A. 3-5-04 DATE

TRAFFIC ENGINEERING, TRANSPORTATION DIVISION, CITY OF ALBUQUERQUE, NEW MEXICO 03/10/04 DATE

PARKS AND RECREATION DEPARTMENT, CITY OF ALBUQUERQUE, NEW MEXICO 3/10/04 DATE

CITY SURVEYOR, CITY OF ALBUQUERQUE, NEW MEXICO 2-23-04 DATE

REAL PROPERTY DIVISION, CITY OF ALBUQUERQUE, NEW MEXICO 3-5-04 DATE

P.N.M. ELECTRIC SERVICES 2-24-04 DATE

QWEST TELECOMMUNICATIONS 2-25-4 DATE

P.N.M. GAS SERVICES 2-24-04 DATE

COMCAST CABLE VISION OF NEW MEXICO, INC. 2-26-04 DATE

SURVEYORS CERTIFICATION

I, Charles G. Cala, Jr., New Mexico Professional Surveyor No. 11184, do hereby certify; that this Plat and the actual survey on the ground upon which it is based were performed by me or under my direct supervision; that the survey shows all easements made known to me by this owner, utility companies, or other parties expressing an interest; that this survey complies with the minimum requirements for Monumentation and Surveys of the Albuquerque Subdivision Ordinance; that this survey meets the Minimum Standards for Surveying in New Mexico, and that it is true and correct to the best of my knowledge and belief.

Charles G. Cala, Jr., NMPS #11184 2-23-2004 Date

CHARLES G. CALA, JR. NEW MEXICO 11184 REGISTERED PROFESSIONAL SURVEYOR

JEFF MORTENSEN & ASSOCIATES, INC.
6010-B MIDWAY PARK BLVD. N.E.
ALBUQUERQUE NEW MEXICO 87109
ENGINEERS SURVEYORS (505) 345-4250
JOB #2002.050.6 FINAL1

SHEET 1 OF 6

SP #2003430380

2004032255
2004032255
Page: 2 of 6
03/11/2004 10:31A
Mary Herrera Bern. Co. PLAT R 32.00 Bk-2004C Pg-76

BK. 2004C PG. 76

COUNTY CLERK FILING DATA

SUBDIVISION PLAT OF
OCOTILLO SUBDIVISION
ALBUQUERQUE, BERNALILLO COUNTY, NEW MEXICO
FEBRUARY, 2004

Notes:

1. A boundary survey was performed in March, 2003. Property corners were found or set as indicated.
2. All distances are ground distances.
3. Site located within projected Section 16, Township 11 North, Range 4 East, N.M.P.M. (Elena Gallegos Grant).
4. Bearings shown hereon are New Mexico State Plane Grid Bearings, Central Zone. These bearings are positioned from A.C.S. Control Station "Heaven".
5. Record bearings and distances are shown in parenthesis.
6. Private street mileage created by this plat = 0.74 miles (full-width).
7. Upon completion of the construction of the streets, City of Albuquerque approved centerline monuments shall be placed at all intersections or as otherwise indicated in lieu of subdivision block corner monumentation. Location of said monuments are designated with a " ◎ " symbol.
8. Manholes will be offset at points of curvature, points of tangency, street intersections, and other angle points where practical to allow use of centerline monumentation.
9. The purpose of this plat is to:
   a. Create 78 (seventy-eight) residential lots and Parcels A, B and C from Lots Lots 10-24, inclusive, Block 18, Lots 7-15, inclusive, Block 20 and a portion of Lot 16, Block 20, North Albuquerque Acres, Tract 3, Unit 1; together with the vacated portions of Carmel Avenue N.E. and Holly Avenue N.E.
   b. Eliminate the interior property lines between former Lots 10-24, inclusive, Block 18 and Lots 7-16, inclusive, Block 20.
   c. Dedicate in fee simple the half-widths for Carmel Avenue and Holbrook Street as shown.
   d. Grant the necessary private access, private storm drainage, private landscaping, public utility and City of Albuquerque public water line, public sanitary sewer, public storm drain, temporary public vehicular and temporary public drainage easements as shown.
   e. Vacate the nonspecific easements and/or right-of-ways for road and/or pipeline purposes (water, gas or sewage), telephone and electrical energy as noted, affecting the properties platted hereon, granted by the following documents: Book 132, Page 249, Book 132, Page 270, Book 124, Page 343, Book 124, Page 451 and Book 124, Page 134; public vehicular access easement by document in Book A45, Page 600, records of Bernalillo County, New Mexico (03DRB-01356).
   f. Incorporate the vacations of a portion of the public rights-of-way of Carmel Avenue N.E. (03DRB-01355) and Holly Avenue N.E. (03DRB-01355), as shown.
   g. Incorporate the additional vacation of portions of the public right-of-way of Holly Avenue N.E. (03DRB-01980), as shown.
   e. Vacate the nonspecific easements and/or right-of-ways for road and/or pipeline purposes (water, gas or sewage), telephone and electrical energy as noted, affecting the properties platted hereon, granted by the following document: Book 124, Page 468, records of Bernalillo County, New Mexico (03DRB-01981).
10. A portion of this subdivision is located within a 100-year flood plain as shown on the national flood insurance program "Flood Insurance Rate Map". A Letter of Map Revision (LOMR) will be requested from the Federal Emergency Management Agency (FEMA) to remove the existing flood plain. Until the LOMR is issued by FEMA, property owners may be required to purchase flood insurance.
11. Prior to development, City of Albuquerque Water and Sanitary Sewer Service to Lots 1-78, Ocotillo must be verified and coordinated with the Public Works Department, City of Albuquerque.
12. The following documents and instruments were used for the performance and preparation of this survey:
    a. Plat of North Albuquerque Acres, Tract 3, Unit 1, filed 03-23-1931, Book D, Page 132, Records of Bernalillo County, New Mexico.
    b. Plat of A.M.A.F.C.A. North Baca Dam, filed 05-15-1985, Book C27, Page 52, Records of Bernalillo County, New Mexico.
    c. Boundary/Right-of-Way Survey of Carmel Avenue N.E. between Ventura Street N.E. and Tract A, A.M.A.F.C.A. North Baca Dam prepared by this office dated 01-30-2002 (unrecorded).
    d. Plat of North Albuquerque Acres, Tract 3, Unit 3, filed 09-10-1931, Book D, Page 121, Records of Bernalillo County, New Mexico.
    e. New Mexico State Highway Commission, Right-of-Way Map, New Mexico Project No. TPU-4054(2) dated 05-07-1993 (Paseo Del Norte).
    f. Quitclaim Deed executed 10-14-2003, remnant of PDN Parcel 9-4 (unrecorded)
13. Gross subdivision acreage = 24.1508 acres.
14. Open space requirements are met on each lot in accordance with the provisions of Section 14-16-3-8(A)(1), City of Albuquerque Comprehensive City Zoning Code.

CENTERLINE TABLES

LINE	DIRECTION	DISTANCE
CL1	S 00°27'50" W	2.54'
CL2	NOT USED	
CL3	NOT USED	
CL4	N 89°32'10" W	12.00'
CL5	S 00°27'50" W	42.89'
CL6	S 84°03'19" E	45.43'

CURVE	RADIUS	LENGTH	CHORD BEARING	CHORD	DELTA
CLC1	75.00'	117.81'	S 44°32'10" E	106.07'	90°00'00"
CLC2	50.00'	73.76'	S 41°47'44" E	67.25'	84°31'09"

BOUNDARY TABLES

LINE	DIRECTION	DISTANCE
L1	N 89°55'27" W	38.65
(L1)	N 89°32'57" W	38.65'
L2	N 89°32'10" W	108.39'
L3	S 89°32'10" E	3.32'
L4	S 00°12'51" W	6.00'
L5	N 89°28'28" W	4.75'
L6	S 00°27'50" W	20.64'
L7	N 89°32'10" W	44.68'
L8	S 89°30'40" E	109.99'

CURVE	RADIUS	LENGTH	CHORD BEARING	CHORD	DELTA
C1	17.50'	27.70'	N 44°33'55" W	24.90'	90°41'57"
(C1)	17.50'	27.70'			90°41'55"
C2	25.00'	39.27'	S 45°27'50" W	35.36'	90°00'00"
C3	25.00'	39.11'	N 44°42'50" W	35.25'	89°38'39"
C4	40.00'	39.10'	S 27°54'12" E	37.56'	56°00'11"
C5	25.00'	24.60'	S 27°43'13" E	23.62'	56°22'07"
C6	40.00'	37.34'	S 26°50'41" W	36.00'	53°29'33"
C7	25.00'	39.43'	N 45°17'10" E	35.46'	90°21'21"
C8	40.00'	25.74'	S 72°01'39" W	25.30'	36°52'23"
C9	40.00'	36.07'	N 63°42'12" W	34.86'	51°39'54"
C10	40.00'	44.32'	N 06°07'41" W	42.09'	63°29'08"
C11	40.00'	13.82'	N 35°30'56" E	13.76'	19°48'07"
C12	25.00'	19.61'	N 22°56'25" E	19.12'	44°57'09"
C13	25.00'	39.27'	N 44°32'10" W	35.36'	90°00'00"
C14	25.00'	39.27'	S 45°27'50" W	35.36'	90°00'00"
C15	25.00'	22.21'	S 24°58'57" E	21.48'	50°53'35"
C16	40.00'	17.97'	S 37°33'28" E	17.82'	25°44'33"
C17	40.00'	44.48'	S 07°10'04" W	42.22'	63°42'33"
C18	40.00'	35.91'	S 64°44'35" W	34.72'	51°26'30"
C19	40.00'	36.05'	N 63°42'52" W	34.85'	51°38'35"
C20	40.00'	44.34'	N 06°08'21" W	42.10'	63°30'27"
C21	40.00'	17.97'	N 38°29'09" E	17.82'	25°44'33"
C22	25.00'	22.21'	N 25°54'38" E	21.48'	50°53'35"
C23	25.00'	39.27'	N 44°32'10" W	35.36'	90°00'00"
C24	25.00'	39.27'	S 45°27'50" W	35.36'	90°00'00"
C25	25.00'	22.21'	S 24°58'57" E	21.48'	50°53'35"
C26	40.00'	17.97'	S 37°33'28" E	17.82'	25°44'33"
C27	40.00'	44.48'	S 07°10'04" W	42.22'	63°42'33"
C28	40.00'	35.91'	S 64°44'35" W	34.72'	51°26'30"
C29	40.00'	36.05'	N 63°42'52" W	34.85'	51°38'35"
C30	40.00'	44.34'	N 06°08'21" W	42.10'	63°30'27"
C31	40.00'	17.97'	N 38°29'09" E	17.82'	25°44'33"
C32	25.00'	22.21'	N 25°54'38" E	21.48'	50°53'35"
C33	25.00'	39.27'	N 44°32'10" W	35.36'	90°00'00"
C34	25.00'	39.27'	S 45°27'50" W	35.36'	90°00'00"
C35	25.00'	22.21'	S 24°58'57" E	21.48'	50°53'35"
C36	40.00'	17.97'	S 37°33'28" E	17.82'	25°44'33"
C37	40.00'	44.48'	S 07°10'04" W	42.22'	63°42'33"
C38	40.00'	35.91'	S 64°44'35" W	34.72'	51°26'30"
C39	40.00'	36.05'	N 63°42'52" W	34.85'	51°38'35"
C40	40.00'	62.31'	N 06°43'56" E	56.20'	89°15'00"
C41	25.00'	20.77'	N 27°33'34" E	20.18'	47°35'43"
C42	25.00'	1.44'	N 02°06'46" E	1.44'	03°17'52"
C43	25.00'	39.27'	N 44°32'10" W	35.36'	90°00'00"
C44	25.00'	19.06'	S 68°37'07" W	18.61'	43°41'27"
C45	40.00'	9.51'	S 53°34'56" W	9.48'	13°37'05"
C46	40.00'	106.62'	N 43°14'44" W	77.74'	152°43'36"
C47	40.00'	7.71'	N 38°38'11" E	7.69'	11°02'14"
C48	25.00'	19.06'	N 22°18'34" E	18.61'	43°41'27"
C49	28.00'	41.30'	N 41°47'44" W	37.66'	84°31'09"
C50	25.00'	30.00'	S 56°05'07" W	28.23'	68°45'26"
C51	44.00'	48.39'	S 53°12'57" W	45.99'	63°01'05"
C52	53.00'	83.25'	S 44°32'10" E	74.95'	90°00'00"
C53	25.00'	39.27'	N 45°27'50" E	35.36'	90°00'00"
C54	25.00'	39.27'	N 44°32'10" W	35.36'	90°00'00"
C55	25.00'	39.27'	S 45°27'50" W	35.36'	90°00'00"
C56	6.00'	8.82'	S 42°35'40" W	8.05'	84°15'39"

RECORD DRAWING

CITY PROJECT No. 729181

2 of 25

JEFF MORTENSEN & ASSOCIATES, INC.
6010-B MIDWAY PARK BLVD. N.E.
ALBUQUERQUE NEW MEXICO 87109
ENGINEERS SURVEYORS (505) 345-4250
JOB #2002.050.6 FINAL1

SHEET 2 OF 6

SP #2003430380

200403225 5

2004032255
Doc#(s):
Page: 3 of 6
03/11/2004 10:31A
Bk-2004C Pg-76
Mary Herrera Bern. Co. PLAT R 32.00

BK. 2004C PG. 76

COUNTY CLERK FILING DATA

KEY MAP

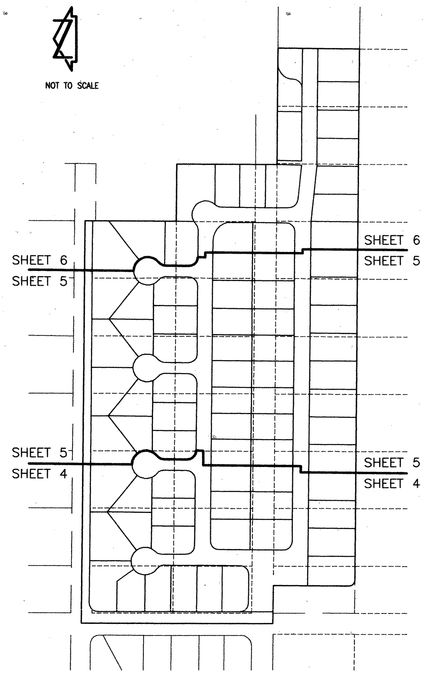

Public Utility easements shown on this plat are ten (10) feet wide and are granted for the common and joint use of:

1. The P.N.M. Electric Services for the installation, maintenance, and service of overhead and underground electrical lines, transformers, poles and other equipment, fixtures, structures and related facilities reasonably necessary to provide electrical service.

2. The P.N.M. Gas Services for installation, maintenance, and service of natural gas lines, valves and other equipment and facilities reasonably necessary to provide natural gas.

3. Qwest Corporation for the installation, maintenance, and service of all buried and aerial communication lines and other related equipment and facilities reasonably necessary to provide communication services including, but not limited to, above ground pedestals and closures.

4. Comcast Cable Vision of New Mexico, Inc. for the installation, maintenance, and service of such lines, cables, and other related equipment and facilities reasonably necessary to provide Cable TV service.

Included, is the right to build, rebuild, construct, reconstruct, locate, relocate, change, remove, modify, renew, operate, and maintain facilities for the purposes described above, together with free access to, from, and over said easements, including sufficient working area space for electric transformers, with the right and privilege to trim and remove trees, shrubs or bushes which interfere with the purposes set forth herein. No building, sign, pool (aboveground or subsurface), hot tub, concrete or wood pool decking, or other structure shall be erected or constructed on said easements, nor shall any well be drilled or operated thereon. Property owners shall be solely responsible for correcting any violations of the National Electric Safety Code caused by construction or pools, decking, or any structures adjacent to within or near easements shown on this plat.

SUBDIVISION PLAT OF

OCOTILLO SUBDIVISION

ALBUQUERQUE, BERNALILLO COUNTY, NEW MEXICO

FEBRUARY, 2004

KEYED NOTES

VACATED PUBLIC RIGHTS-OF-WAY AND EASEMENT

(1) HOLLY AVENUE N.E. VACATED BY 03DRB-01355

(2) SOUTH 4' OF HOLLY AVENUE N.E. VACATED BY 03DRB-01355

(3) SOUTH 8' OF HOLLY AVENUE N.E. VACATED BY 03DRB-01355

(4) SOUTH 8' OF CARMEL AVENUE N.E. VACATED BY 03DRB-01355

(5) PUBLIC VEHICULAR ACCESS EASEMENT GRANTED BY DOCUMENT FILED 11-18-2002, BOOK A45, PAGE 600, DOC. #2002151009 VACATED BY 03DRB-01356

(6) THE NONSPECIFIC EASEMENTS AND/OR RIGHT-OF-WAYS FOR ROAD AND/OR PIPELINE PURPOSES (WATER, GAS OR SEWAGE), TELEPHONE AND ELECTRICAL ENERGY AFFECTING THE PROPERTIES PLATTED HEREON, GRANTED BY THE DOCUMENT RECORDED IN BOOK 132, PAGE 249, BOOK 132, PAGE 270, BOOK 124, PAGE 343, BOOK 124, PAGE 451 AND BOOK 124, PAGE 134 VACATED BY 03DRB-01356, ALSO BOOK 124, PAGE 468 VACATED BY 03DRB-01981

(7) REMAINING PORTION HOLLY AVENUE N.E. VACATED BY 03DRB-01980

NEW EASEMENTS

(8) PRIVATE ACCESS, PRIVATE STORM DRAINAGE EASEMENTS SERVING LOTS 1-78 AND PARCELS B AND C, AND A CITY OF ALBUQUERQUE PUBLIC WATER AND PUBLIC SANITARY SEWER EASEMENTS GRANTED BY THIS PLAT. MAINTENANCE OF THE PRIVATE EASEMENTS SHALL BE THE RESPONSIBILITY OF THE OCOTILLO SUBDIVISION HOMEOWNERS ASSOCIATION, PURSUANT TO THE DECLARATION OF RESTRICTIVE AND PROTECTIVE COVENANTS FOR OCOTILLO SUBDIVISION FILED ON 03-11-2004, BOOK A74, PAGES 2168.

(9) PRIVATE ACCESS EASEMENT SERVING LOTS 1-78 AND PARCELS B AND C, AND A CITY OF ALBUQUERQUE PUBLIC STORM DRAINAGE, PUBLIC WATER AND PUBLIC SANITARY SEWER EASEMENTS GRANTED BY THIS PLAT. MAINTENANCE OF THE PRIVATE EASEMENTS SHALL BE THE RESPONSIBILITY OF THE OCOTILLO SUBDIVISION HOMEOWNERS ASSOCIATION, PURSUANT TO THE DECLARATION OF RESTRICTIVE AND PROTECTIVE COVENANTS FOR OCOTILLO SUBDIVISION FILED ON 03-11-2004, BOOK A74, PAGES 2168.

(10) CITY OF ALBUQUERQUE PUBLIC STORM DRAINAGE EASEMENT WITHIN PARCEL A GRANTED BY THIS PLAT.

(11) 10' PUBLIC UTILITY EASEMENT GRANTED BY THIS PLAT

(12) 15' CITY OF ALBUQUERQUE PUBLIC WATER LINE EASEMENT GRANTED BY THIS PLAT

(13) 25' CITY OF ALBUQUERQUE PUBLIC STORM DRAINAGE EASEMENT GRANTED BY THIS PLAT

(14) TEMPORARY PUBLIC VEHICULAR EASEMENT GRANTED BY THIS PLAT UNTIL SUCH TIME THAT HOLLY AVENUE N.E. IS VACATED AND/OR RELOCATED TO THE EAST OF PROPOSED OCOTILLO SUBDIVISION VIA THE STANDARD VACATION AND PLATTING PROCESS OF THE DEVELOPMENT REVIEW BOARD OF THE CITY OF ALBUQUERQUE.

(15) TEMPORARY PUBLIC DRAINAGE EASEMENT GRANTED BY THIS PLAT TO CONVEY PUBLIC RUNOFF TO THE PUBLIC STORM DRAINAGE SYSTEM WITHIN PARCEL A UNTIL SUCH TIME THAT HOLLY AVENUE N.E. IS VACATED AND/OR RELOCATED TO THE EAST OF PROPOSED OCOTILLO SUBDIVISION VIA THE STANDARD VACATION AND PLATTING PROCESS OF THE DEVELOPMENT REVIEW BOARD OF THE CITY OF ALBUQUERQUE.

(16) PARCEL C IS GRANTED AS A PRIVATE ACCESS EASEMENT SERVING LOTS 1-78 AND PARCELS B AND C, AND A CITY OF ALBUQUERQUE PUBLIC WATER AND PUBLIC SANITARY SEWER EASEMENTS. FUTURE VACATION OF HOLLY AVENUE N.E., ADJACENT TO PROPOSED PARCELS B AND C SHALL ALSO REQUIRE VACATION AND/OR REALIGNMENT OF THESE EASEMENTS TO A LOCATION EAST OF OCOTILLO SUBDIVISION. MAINTENANCE OF THE PRIVATE ACCESS EASEMENT SHALL BE THE RESPONSIBILITY OF THE OCOTILLO SUBDIVISION HOMEOWNERS ASSOCIATION, PURSUANT TO THE DECLARATION OF RESTRICTIVE AND PROTECTIVE COVENANTS FOR OCOTILLO SUBDIVISION FILED ON 03-11-2004, BOOK A74, PAGES 2168.

(17) PRIVATE LANDSCAPING EASEMENT GRANTED BY THIS PLAT TO SERVE THE OCOTILLO SUBDIVISION HOMEOWNERS ASSOCIATION. MAINTENANCE OF THE PRIVATE EASEMENT SHALL BE THE RESPONSIBILITY OF THE OCOTILLO SUBDIVISION HOMEOWNERS ASSOCIATION, PURSUANT TO THE DECLARATION OF RESTRICTIVE AND PROTECTIVE COVENANTS FOR OCOTILLO SUBDIVISION FILED ON 03-11-2004, BOOK A74, PAGES 2168.

(18) 20' TEMPORARY PUBLIC STORM DRAINAGE EASEMENT GRANTED BY THIS PLAT TO ACCEPT AND CONVEY EXISTING OFFSITE FLOWS FROM LOT 6, BLOCK 20, NORTH ALBUQUERQUE ACRES, TRACT 3, UNIT 1 TO PARCEL A UNTIL SUCH TIME THAT DEVELOPMENT ON SAID LOT 6 INTERCEPTS SAID HISTORIC FLOWS. MAINTENANCE OF THE TEMPORARY EASEMENT SHALL BE THE RESPONSIBILITY OF THE OCOTILLO SUBDIVISION HOMEOWNERS ASSOCIATION, PURSUANT TO THE DECLARATION OF RESTRICTIVE AND PROTECTIVE COVENANTS FOR OCOTILLO SUBDIVISION FILED ON 03-11-2004, BOOK A74, PAGES 2168.

RIGHT-OF-WAY DEDICATION

(19) ADDITIONAL 4' FOR HOLBROOK STREET N.E. DEDICATED BY THIS PLAT, AREA = 0.0437 ACRES±

MONUMENTS

(A) FOUND 1" IRON PIPE
(B) FOUND #5 REBAR W/CAP STAMPED "WAYJOHN PS 14269"
(C) FOUND #3 REBAR, NO I.D. (BENT)
(D) FOUND #5 REBAR W/CAP STAMPED "NEW MEXICO PS 11184"
(E) FOUND A.M.A.F.C.A. BRASS CAP SET IN CONCRETE
(F) FOUND #4 REBAR W/CAP STAMPED "PS 10464"
(G) FOUND #3 REBAR W/CAP STAMPED "NMPS 12803"
(H) FOUND HUB AND TACK
(J) FOUND #5 REBAR W/CAP STAMPED "PLS 3516"
(K) FOUND #4 REBAR W/CAP STAMPED "7264"
(L) FOUND #5 REBAR, NO I.D., IN CONCRETE
(L) FOUND #5 REBAR, NO I.D., IN CONCRETE
(M) FOUND #4 REBAR, NO I.D.
(N) CALCULATED POSITION, POINT NOT SET
(P) SET #5 REBAR W/CAP STAMPED "NEW MEXICO PS 11184"

RECORD DRAWING

JEFF MORTENSEN & ASSOCIATES, INC.
☐ 6010-B MIDWAY PARK BLVD. N.E.
☐ ALBUQUERQUE ☐ NEW MEXICO 87109
☐ ENGINEERS ☐ SURVEYORS (505) 345-4250
JOB #2002.050.6 FINAL1

SP #2003430380

200403225 5

2004032255
Doc#(s):
Page: 4 of 6
03/11/2004 10:31A
Bk-2004C Pg-76
Mary Herrera Bern. Co. PLAT R 32.00

BK. 2004C PG. 76

COUNTY CLERK FILING DATA

SUBDIVISION PLAT OF

OCOTILLO SUBDIVISION

ALBUQUERQUE, BERNALILLO COUNTY, NEW MEXICO

FEBRUARY, 2004

SCALE: 1" = 50'

NOTE: FOR CENTERLINE AND BOUNDARY TABLES SEE SHEET 2 OF 6. FOR KEYED NOTES SEE SHEET 3 OF 6.

EASEMENT TABLES

LINE	DIRECTION	DISTANCE
E1	S 89°32'10" E	31.58'
E2	S 00°27'50" W	27.16'
E3	N 89°32'10" W	41.07'

CURVE	RADIUS	LENGTH	CHORD BEARING	CHORD	DELTA
EC1	25.00'	39.27'	S 44°32'10" E	35.36'	90°00'00"
EC2	15.00'	23.56'	S 45°27'50" W	21.21'	90°00'00"

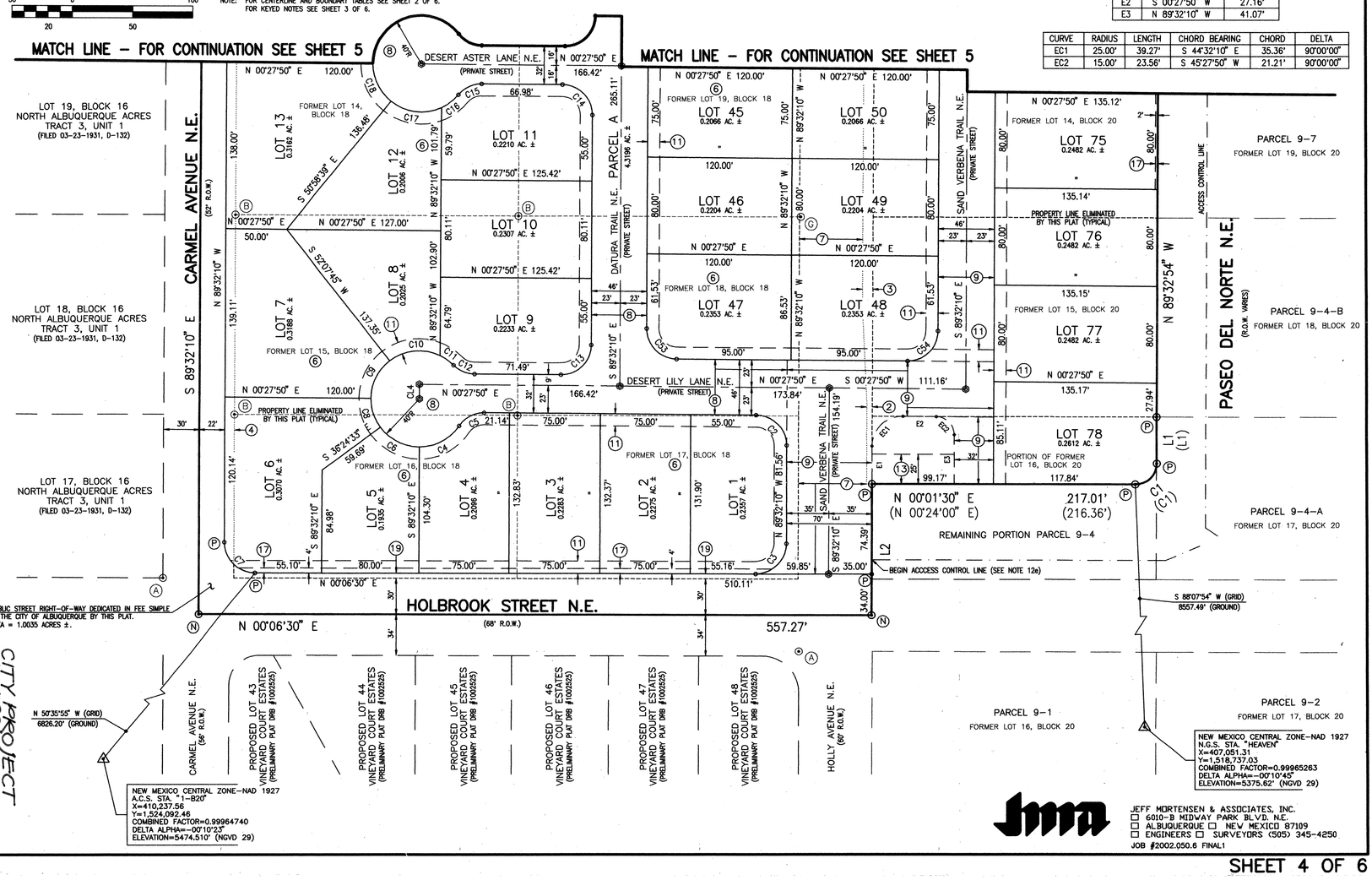

CITY PROJECT No. 729187

3 of 25

JEFF MORTENSEN & ASSOCIATES, INC.
☐ 6010-B MIDWAY PARK BLVD. N.E.
☐ ALBUQUERQUE ☐ NEW MEXICO 87109
☐ ENGINEERS ☐ SURVEYORS (505) 345-4250
JOB #2002.050.6 FINAL1

SP #2003430380

2004032255

2004032255
00045752
Page: 5 of 6
02/11/2004 10:31A
Mary Herrera Bern. Co. PLAT R 32.00 Bk-2004C Pg-76

BK. 2004C PG. 76

COUNTY CLERK FILING DATA

SUBDIVISION PLAT OF

OCOTILLO SUBDIVISION

ALBUQUERQUE, BERNALILLO COUNTY, NEW MEXICO

FEBRUARY, 2004

SCANNED BY ACCUTRACPRO

SCALE: 1" = 50'

NOTE: FOR CENTERLINE AND BOUNDARY TABLES SEE SHEET 2 OF 6. FOR KEYED NOTES SEE SHEET 3 OF 6.

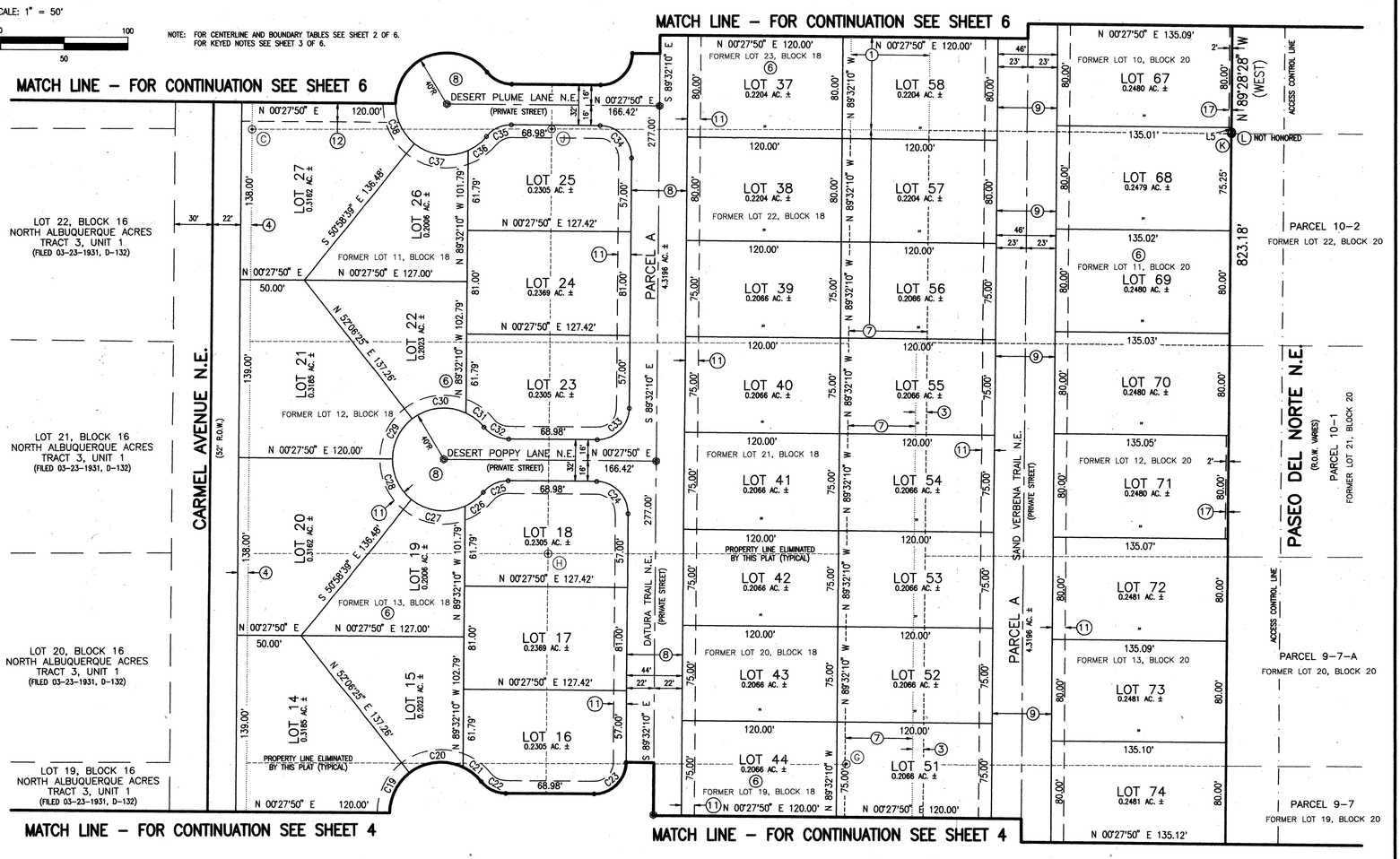

JEFF MORTENSEN & ASSOCIATES, INC.
6010-B MIDWAY PARK BLVD. N.E.
ALBUQUERQUE NEW MEXICO 87109
ENGINEERS SURVEYORS (505) 345-4250
JOB #2002.050.6 FINAL2

SHEET 5 OF 6

SP #2003430380

2004032255

2004032255
00045752
Page: 6 of 6
02/11/2004 10:31A
Mary Herrera Bern. Co. PLAT R 32.00 Bk-2004C Pg-76

BK. 2004C PG. 76

COUNTY CLERK FILING DATA

SUBDIVISION PLAT OF

OCOTILLO SUBDIVISION

ALBUQUERQUE, BERNALILLO COUNTY, NEW MEXICO

FEBRUARY, 2004

RECORD DRAWING

SCALE: 1" = 50'

NOTE: FOR CENTERLINE AND BOUNDARY TABLES SEE SHEET 2 OF 6. FOR KEYED NOTES SEE SHEET 3 OF 6.

EASEMENT TABLES

LINE	DIRECTION	DISTANCE
E4	S 89°30'40" E	93.87'
E5	N 89°30'40" W	23.00'
E6	N 89°30'40" W	27.00'
E7	N 00°27'50" E	35.00'

CURVE	RADIUS	LENGTH	CHORD BEARING	CHORD	DELTA
EC3	45.00'	60.58'	S 51°53'46" W	56.11'	77°08'08"

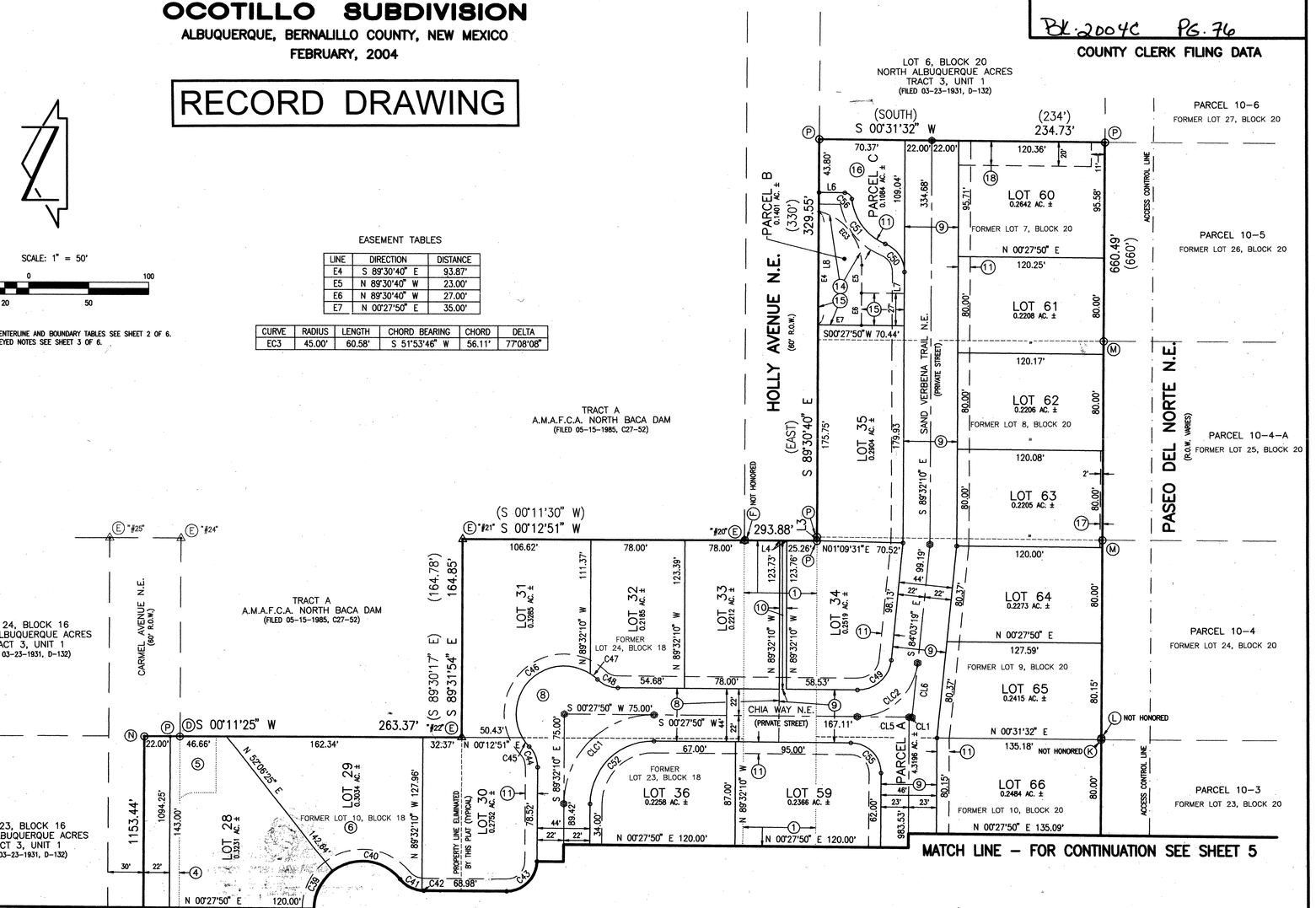

JEFF MORTENSEN & ASSOCIATES, INC.
6010-B MIDWAY PARK BLVD. N.E.
ALBUQUERQUE NEW MEXICO 87109
ENGINEERS SURVEYORS (505) 345-4250
JOB #2002.050.6 FINAL3

SHEET 6 OF 6

CITY PROJECT No. 725187

4 of 25

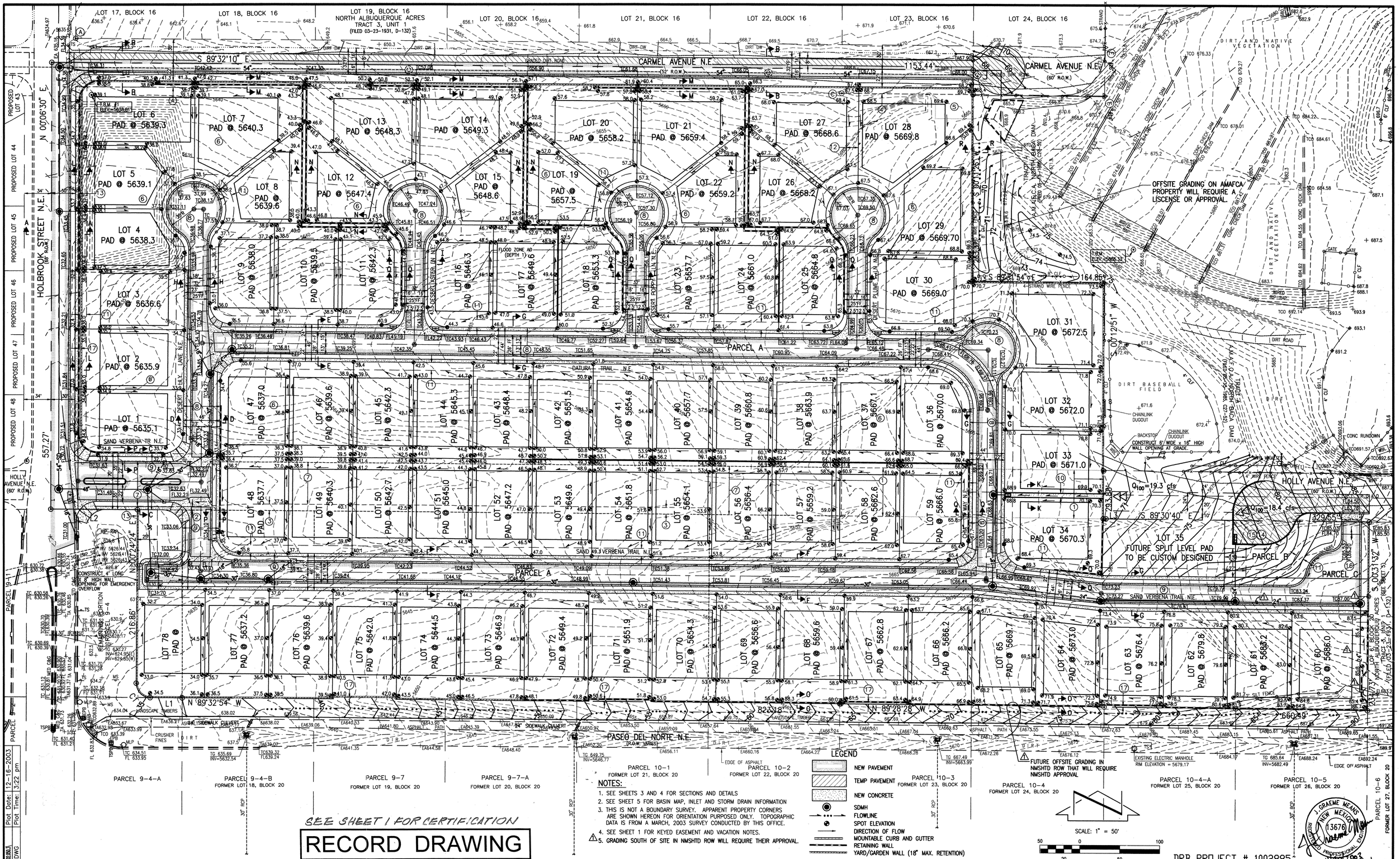

NOTES:

1. SEE SHEETS 3 AND 4 FOR SECTIONS AND DETAILS
2. SEE SHEET 5 FOR BASIN MAP, INLET AND STORM DRAIN INFORMATION
3. THIS IS NOT A BOUNDARY SURVEY. APPARENT PROPERTY CORNERS ARE SHOWN HEREON FOR ORIENTATION PURPOSED ONLY. TOPOGRAPHIC DATA IS FROM A MARCH, 2003 SURVEY CONDUCTED BY THIS OFFICE.
4. SEE SHEET 1 FOR KEYED EASEMENT AND VACATION NOTES.
5. △1 GRADING SOUTH OF SITE IN NMSHTD ROW WILL REQUIRE THEIR APPROVAL.

SEE SHEET 1 FOR CERTIFICATION

RECORD DRAWING

DRB PROJECT # 1002885

J. GRAEME MEANS NEW MEXICO 13676 REGISTERED PROFESSIONAL ENGINEER 11/20/2003 12/16/2003

File Path:	E:\MYWORK\2002\003\
File Name:	20503G3.DWG
Plot Date:	12-16-2003
Plot Time:	3:22 pm

JEFF MORTENSEN & ASSOCIATES, INC.
6010-B MIDWAY PARK BLVD. N.E.
ALBUQUERQUE NEW MEXICO 87109
ENGINEERS SURVEYORS (505) 345-4250
FAX: 505 345-4254 Email: jmainc@swcp.com

APPROVED FOR ROUGH GRADING

Brad S. Bjikam 12/16/03

CITY HYDROLOGY

GRADING PLAN △2 (AS APPROVED)

OCOTILLO SUBDIVISION

DESIGNED BY	G.M.
DRAWN BY	S.G.H./J.L.P.
APPROVED BY	G.M.

NO.	DATE	BY	REVISIONS
△1	12/16/03	G.M.	ACCEPT OFFSITE FLOWS ON LOT 60; ADD STORM DRAIN, ADD NMSHTD GRADING NOTE
△2	10/04		RECORD DRAWING (AS APPROVED)

JOB NO.	2002.050.3
DATE	11-2003
SHEET	5 OF 25

CITY PROJECT No. 729181

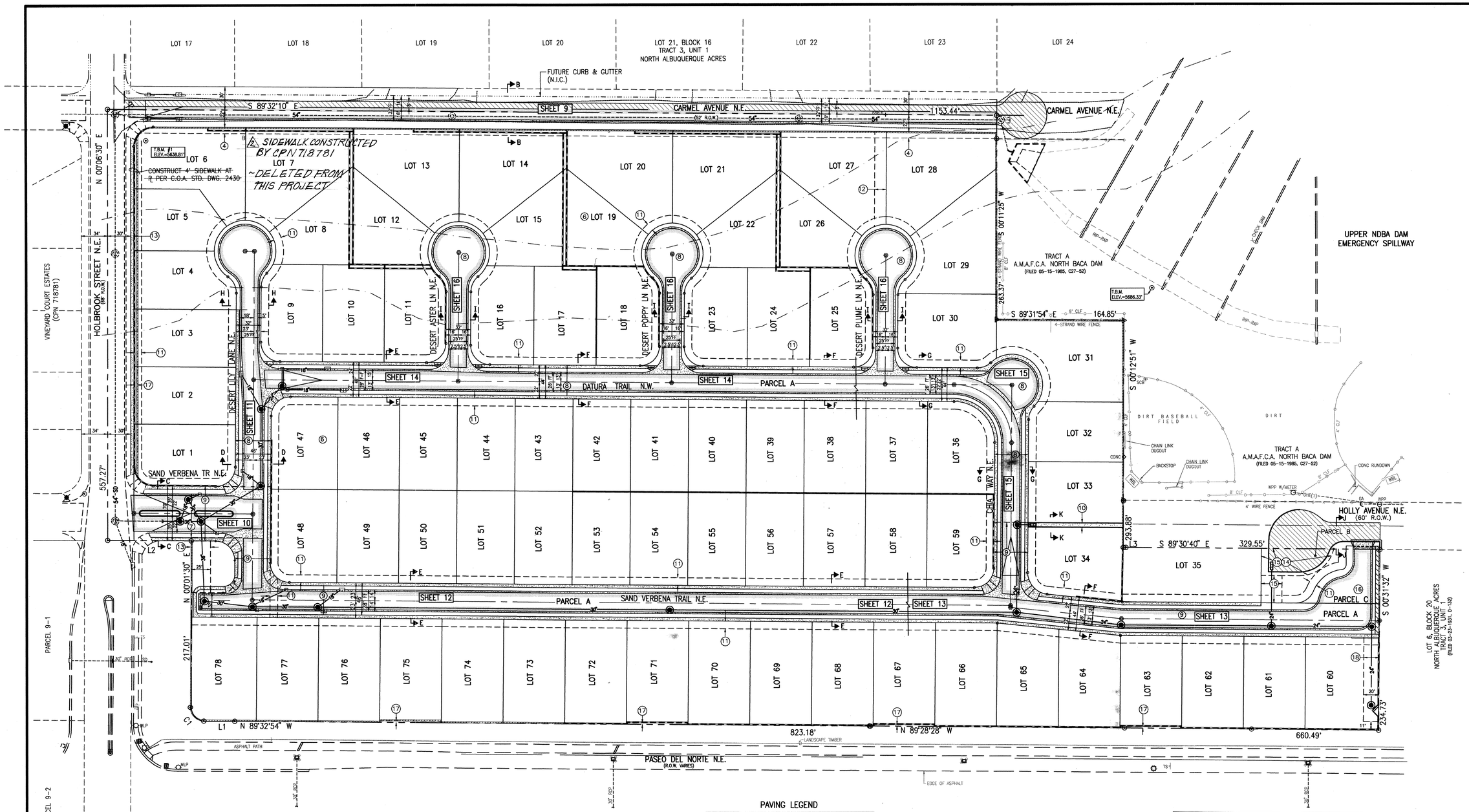

PAVING LEGEND

- PROPOSED PERMANENT PAVEMENT
- PROPOSED TEMPORARY PAVEMENT PER C.O.A. STD. DWG. 2415B
- PROPOSED CONCRETE
- PROPOSED STREET LIGHT
- PROPOSED STORM DRAIN MANHOLE
- PROPOSED RETAINING WALL BY SEPARATE PERMIT AND PLAN SET
- PROPOSED GARDEN WALL BY SEPARATE PERMIT AND PLAN SET
- MOUNTABLE CURB AND GUTTER PER COA STD DWG 2415A
- STANDARD CURB AND GUTTER PER COA STD DWG 2415A
- CROWN TRANSITION PER C.O.A. STD DWG 2401

SCALE: 1" = 60'

60 0 120
30 60

RECORD DRAWING

SEE SHEET 1 FOR CERTIFICATION

KEYED NOTES

(SEE PLAT, SHEETS 2–4 FOR MORE INFORMATION REGARDING BOUNDARY AND EASEMENTS)

(4) SOUTH 8' OF CARMEL AVENUE N.E. VACATED BY 03DRB-01355

(8) PRIVATE ACCESS, PRIVATE STORM DRAINAGE EASEMENTS SERVING LOTS 1–78 AND PARCELS B AND C, AND CITY OF ALBUQUERQUE PUBLIC WATER AND PUBLIC SANITARY SEWER EASEMENTS. MAINTENANCE OF THE PRIVATE EASEMENTS SHALL BE THE RESPONSIBILITY OF THE OCOTILLO SUBDIVISION HOMEOWNERS ASSOCIATION.

(9) PRIVATE ACCESS EASEMENT SERVING LOTS 1–78 AND PARCELS B AND C, AND CITY OF ALBUQUERQUE PUBLIC STORM DRAINAGE, PUBLIC WATER AND PUBLIC SANITARY SEWER EASEMENTS. MAINTENANCE OF THE PRIVATE EASEMENTS SHALL BE THE RESPONSIBILITY OF THE OCOTILLO SUBDIVISION HOMEOWNERS ASSOCIATION.

(10) CITY OF ALBUQUERQUE PUBLIC STORM DRAINAGE EASEMENT WITHIN PARCEL A.

(11) 10' PUBLIC UTILITY EASEMENT.

(12) 15' CITY OF ALBUQUERQUE PUBLIC WATER LINE EASEMENT.

(13) 25' CITY OF ALBUQUERQUE PUBLIC STORM DRAINAGE EASEMENT.

(14) TEMPORARY PUBLIC VEHICULAR EASEMENT GRANTED UNTIL SUCH TIME THAT HOLLY AVENUE N.E. IS VACATED AND/OR RELOCATED TO THE EAST OF PROPOSED OCOTILLO SUBDIVISION VIA THE STANDARD VACATION AND PLATTING PROCESS OF THE DEVELOPMENT REVIEW BOARD OF THE CITY OF ALBUQUERQUE.

(15) TEMPORARY PUBLIC DRAINAGE EASEMENT GRANTED TO CONVEY PUBLIC RUNOFF TO THE PUBLIC STORM DRAINAGE SYSTEM WITHIN PARCEL A UNTIL SUCH TIME THAT HOLLY AVENUE NE IS VACATED AND/OR RELOCATED TO THE EAST OF PROPOSED OCOTILLO SUBDIVISION VIA THE STANDARD VACATION AND PLATTING PROCESS OF THE DEVELOPMENT REVIEW BOARD OF THE CITY OF ALBUQUERQUE.

(16) PARCEL C IS GRANTED AS A PRIVATE ACCESS EASEMENT SERVING LOTS 1–78 AND PARCELS B AND C, AND A CITY OF ALBUQUERQUE PUBLIC WATER AND PUBLIC SANITARY SEWER EASEMENT. FUTURE VACATION OF HOLLY AVENUE N.E., ADJACENT TO PROPOSED PARCELS B AND C SHALL ALSO REQUIRE VACATION AND/OR REALIGNMENT OF THESE EASEMENTS TO A LOCATION EAST OF OCOTILLO SUBDIVISION. MAINTENANCE OF THE PRIVATE ACCESS EASEMENT SHALL BE THE RESPONSIBILITY OF THE SUBDIVISION HOMEOWNERS ASSOCIATION.

(17) PRIVATE LANDSCAPING EASEMENT GRANTED TO SERVE THE OCOTILLO SUBDIVISION HOMEOWNERS ASSOCIATION. MAINTENANCE OF THE PRIVATE EASEMENT SHALL BE THE RESPONSIBILITY OF THE OCOTILLO SUBDIVISION HOMEOWNERS ASSOCIATION.

(18) 20' TEMPORARY PUBLIC STORM DRAINAGE EASEMENT TO ACCEPT AND CONVEY EXISTING OFFSITE FLOWS FORM LOT 6, BLOCK 20, NORTH ALBUQUERQUE ACRES, TRACT 3, UNIT 1 TO PARCEL A UNTIL SUCH TIME THAT DEVELOPMENT ON SAID LOT 6 INTERCEPTS SAID HISTORIC FLOWS. MAINTENANCE OF THE TEMPORARY EASEMENT SHALL BE THE RESPONSIBILITY OF THE OCOTILLO SUBDIVISION HOMEOWNERS ASSOCIATION.

BOUNDARY TABLES

LINE	DIRECTION	DISTANCE
L1	N 89°55'27" W	38.65'
L2	N 89°32'10" W	108.39'
L3	S 89°32'10" E	3.32'

CURVE	RADIUS	LENGTH	CHORD BEARING	CHORD	DELTA
C1	17.50'	27.70'	N 44°33'55" W	24.90'	90°41'57"

SITE PLAN NOTES

1. SEE SHEETS 2–4 FOR SUBDIVISION PLAT.
2. SEE SHEET 5 FOR APPROVED GRADING PLAN
3. SEE SHEET 7 FOR PAVING AND DRAINAGE SECTIONS AND DETAILS
4. SEE SHEET 8 FOR STREET SECTIONS
5. THIS IS NOT A BOUNDARY SURVEY. APPARENT PROPERTY CORNERS ARE SHOWN HEREON FOR ORIENTATION PURPOSES ONLY. BOUNDARY DATA SHOWN IS FROM SUBDIVISION PLAT PREPARED BY THIS OFFICE (SEE SHEETS 2–4 FOR COPY OF RECORDED PLAT)

AS BUILT INFORMATION
CONTRACTOR C.C.M. DATE 4-23-2004
WORK STAKED BY JMA DATE 10/04
INSPECTORS AS-BUILT INFORMATION BY TERRY BUTLER DATE 10/04
FIELD VERIFICATION BY J.G. DATE 12/04
DRAWINGS CORRECTED BY JMA DATE 1/05
MICRO-FILM INFORMATION
RECORDED BY DATE
POST PROJECT #: CPN 718781

BENCH MARKS
PROJECT BENCHMARK– ACS STATION "HEAVEN" (TIED TO PASEO DEL NORTE ROAD–WAY CONSTRUCTION IN 1999) PREVIOUS ELEVATION = 5378.79 FEET (NGVD 1929). THIS BENCHMARK HAS BEEN USED TO PROVIDE UNIFORMITY BETWEEN THIS SURVEY AND THE PREVIOUS SURVEYS CONDUCTED FOR RELATED NORTH DOMINGO BACA ARROYO PROJECTS. THE ELEVATION FOR ACS STATION "5-C20", AN ACS 1 3/4" ALUMINUM DISK STAMPED "ACS BM, 5-C20", EPOXIED TO THE TOP OF THE CONCRETE DROP INLET, AT THE NWE CURB RETURN IN THE NORTHEAST QUADRANT OF THE INTERSECTION OF VENTURA STREET AND ANAHEM AVENUE N.E., BASED UPON THIS DATUM IS 5552.84 FEET (NGVD 1929). THE C.O.A. PUBLISHED ELEV. IS 5552.71 (NGVD 1929)

SURVEY INFORMATION
FIELD NOTES

NO.	BY	DATE
20502	JMA	03/03

ENGINEER'S SEAL
NEW MEXICO REGISTERED PROFESSIONAL ENGINEER GRAEME MEANS 13676
04/21/2004

JMA

NO.	DATE	REMARKS	BY
1	10/04	RECORD DRAWING	JMA

Revisions
DESIGN
Designed By G.M. Date 01-04
Drawn By S.G.H. Date 01-04
Checked By G.M. Date 04-04

JEFF MORTENSEN & ASSOCIATES, INC.
☐ 6010-B MIDWAY PARK BLVD. N.E.
☐ ALBUQUERQUE ☐ NEW MEXICO 87109
☐ ENGINEERS ☐ SURVEYORS (505) 345-4250
☐ FAX 505 345-4254 ☐ Email: jmainc@swcp.com

2002.050.48

CITY OF ALBUQUERQUE
PUBLIC WORKS DEPARTMENT
ENGINEERING DEVELOPMENT GROUP

TITLE: OCOTILLO SUBDIVISION
PAVING AND STORM DRAINAGE SITE PLAN

Design Review Committee | City Engineer Approval | Last Design Update | Mo./Day/Yr. | Mo./Day/Yr.

City Project No. 729181 | Zone Map No. C-21 | Sheet 6 | Of 25

File Path: E:\MYWORK\#2002\050\A
File Name: 20504SP.DWG
Plot Date: 04-20-2004
Plot Time: 3:07 pm

SCANNED BY MICROFILMED

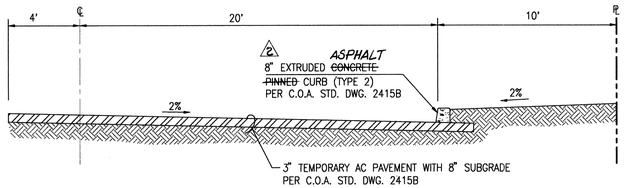

SECTION J–J (HOLLY AVE. N.E.)
SCALE: 1"=1'-0"

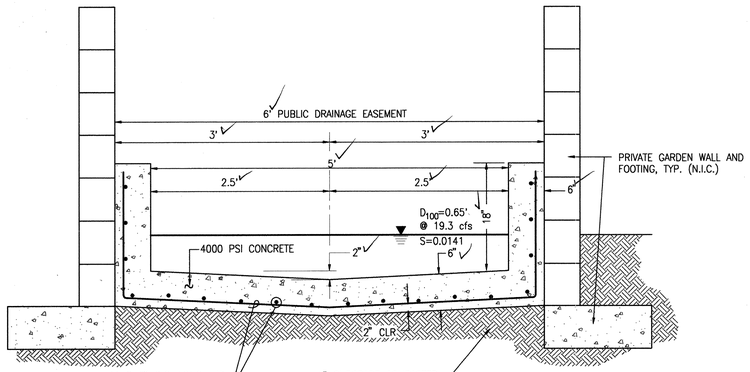

SECTION K–K
SCALE: 1"=1'-0"

NOTE: REFER TO C.O.A. STD. DWG. 2260 FOR GENERAL NOTES AND CONSTRUCTION NOTES (TYPE "B" LINING)

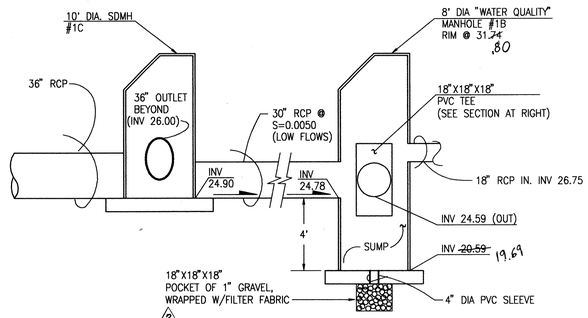

WATER QUALITY MANHOLE SYSTEM
NOT TO SCALE

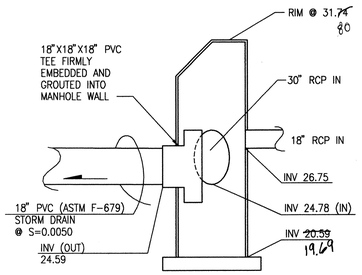

WATER QUALITY MANHOLE OUTLET SECTION
NOT TO SCALE

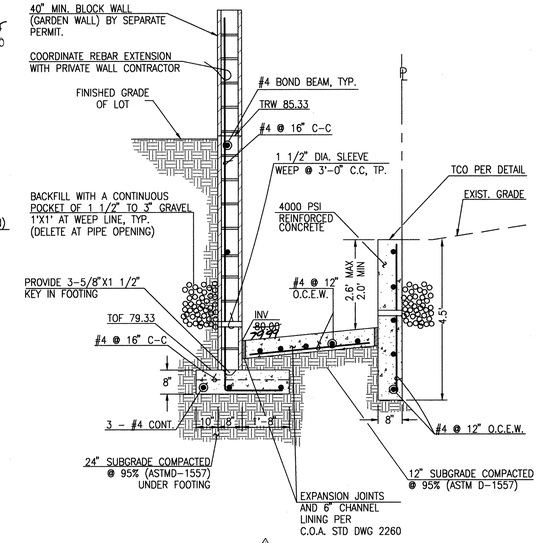

SECTION M–M
SCALE: 1"=2'

NOTE: CONFIRM BLOCK MATERIAL/COLOR WITH OWNER PRIOR TO CONSTRUCTION

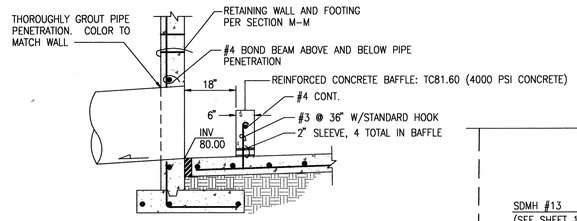

SECTION N–N
SCALE: 1" = 2'

RETAINING WALL NOTES:

1. 8"x8"x16" CMU OF UBC STD. 24-4 OR 24-5.
2. USE KNOCK-OUT BOND BEAM BLOCK AT 4'-0" MAX C.C., VERTICALLY, AND 1 #4 CONTINUOUS.
3. FILL ALL BLOCK VOIDS WITH 3000 PSI CONCRETE.
4. REINFORCING TO BE INTERMEDIATE GRADE STEEL. fs=20,000 psi
5. IN LIEU OF CONTINUOUS KNOCK-OUT BOND BEAMS, CONTRACTOR MAY INSTALL DUR-O-WALL REINFORCING EVERY SECOND COURSE.
6. SPLICE SHALL BE 40 BAR DIA. MINIMUM FOR VERTICAL BARS. ALL OTHER SHALL BE 20 BAR DIA. MINIMUM.
7. CONCRETE FILL SHALL BE 21 DAYS OLD OR ACHIEVE 70% OF DESIGN STRENGTH PRIOR TO BACKFILLING.

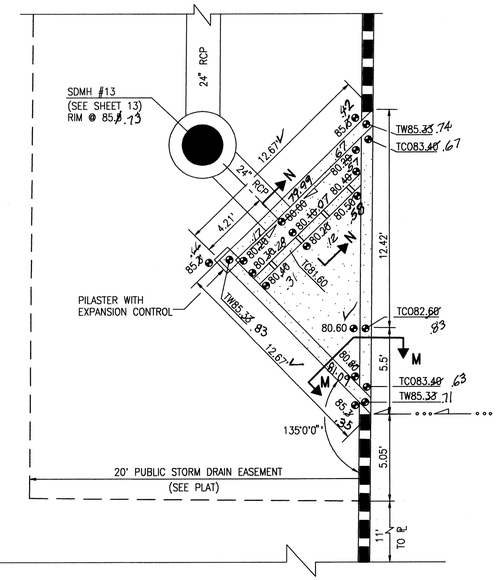

LOT 60 TEMPORARY STORM DRAIN INLET DETAIL
SCALE: 1" = 4'

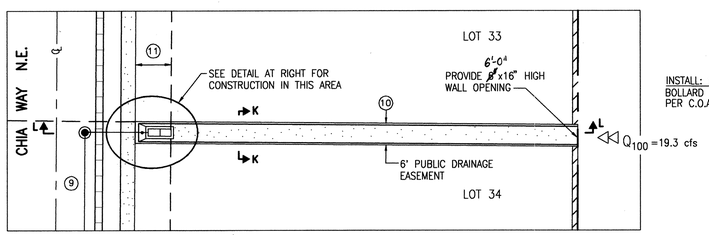

DRAINAGE CHANNEL DETAIL
SCALE: 1"=20'

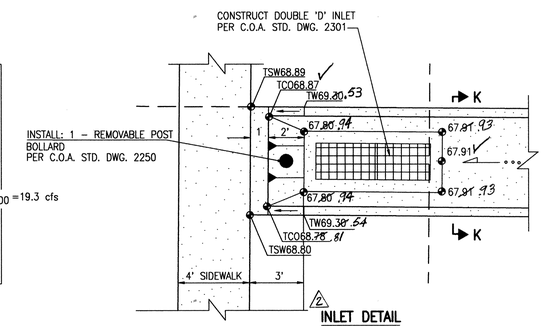

INLET DETAIL
SCALE: 1"=4'

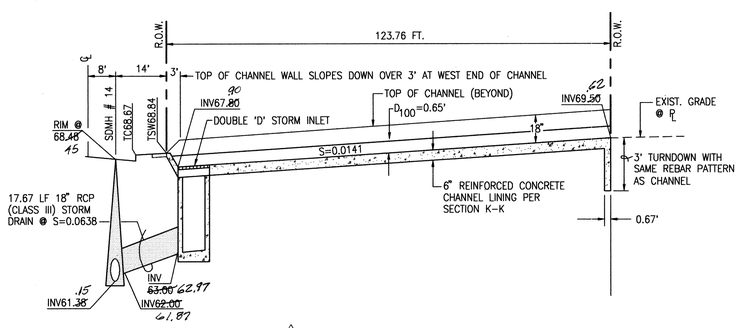

SECTION L–L
SCALE: 1"=20' HORIZ.
1"= 4' VERT.

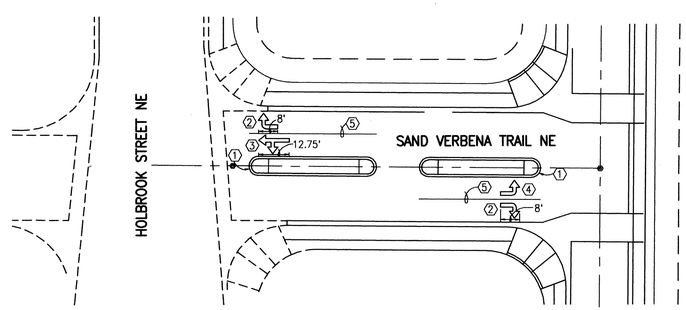

STRIPING DETAIL AT ENTRY
SCALE: 1" = 30'

STRIPING KEYED NOTES

1. PAINT NOSE OF MEDIAN CURB WITH YELLOW REFLECTIVE PAINT (INCIDENTAL)
2. ~~INSTALL~~ WHITE REFLECTORIZED PLASTIC RIGHT ARROW
3. ~~INSTALL~~ WHITE REFLECTORIZED PLASTIC LEFT AND STRAIGHT ARROW
4. ~~INSTALL~~ WHITE REFLECTORIZED PLASTIC LEFT ARROW
5. ~~INSTALL~~ 4" WIDE WHITE REFLECTORIZED PLASTIC STRIPE

SEE SHEET 1 FOR CERTIFICATION

RECORD DRAWING

AS BUILT INFORMATION

CONTRACTOR	C.C.M.	DATE 2-27-2004
WORK STAKED BY	JMA	DATE 10/04
INSPECTORS ACCEPTANCE BY	RECORD DRAWING	DATE 12/04
FIELD VERIFICATION BY	J.G.	DATE 1/05
DRAWINGS CORRECTED BY	JMA	

MICRO-FILM INFORMATION

RECORDED BY	
DATE	

BENCH MARKS

PROJECT BENCHMARK- ACS STATION "HEAVEN" (TIED TO PASEO DEL NORTE ROADWAY CONSTRUCTION IN 1999) PREVIOUS ELEVATION = 5378.79 FEET (NGVD 1929)
THIS BENCHMARK HAS BEEN USED TO PROVIDE UNIFORMITY BETWEEN THIS SURVEY AND THE PREVIOUS SURVEYS CONDUCTED FOR RELATED NORTH DOMINGO BACA ARROYO PROJECTS. THE ELEVATION FOR ACS STATION "S-C20", AN ACS 1 3/4" ALUMINUM DISK STAMPED "ACS BM, S-C20", EPOXIED TO THE TOP OF THE CONCRETE DROP INLET, AT THE NWE CURB RETURN IN THE NORTHEAST QUADRANT OF THE INTERSECTION OF VENTURA STREET AND ANAHEM AVENUE N.E., BASED UPON THIS DATUM IS 5352.84 FEET (NGVD 1929). THE C.O.A. PUBLISHED ELEV. IS 5352.71 (NGVD 1929)

SURVEY INFORMATION

NO.	BY	DATE
FIELD NOTES		
20502	JMA	03/03

ENGINEER'S SEAL

JAMES A. MEANS, NEW MEXICO, 3678, REGISTERED PROFESSIONAL ENGINEER
04/21/2004

NO.	DATE	REMARKS	BY
1	10/04	RECORD DRAWING	JMA

Revisions

DESIGN

		Date
Designed By	G.M.	03-2004
Drawn By	S.G.H.	03-2004
Checked By	G.M.	04-2004

2002.050.4

JEFF MORTENSEN & ASSOCIATES, INC.
☐ 6010-B MIDWAY PARK BLVD. N.E.
☐ ALBUQUERQUE ☐ NEW MEXICO 87109
☐ ENGINEERS ☐ SURVEYORS (505) 345-4250
☐ FAX: 505 345-4254 ☐ ESTABLISHED 1977

CITY OF ALBUQUERQUE
PUBLIC WORKS DEPARTMENT
ENGINEERING DEVELOPMENT GROUP

TITLE: OCOTILLO SUBDIVISION
PAVING AND STORM DRAINAGE SECTIONS AND DETAILS

Design Review Committee	City Engineer Approval	Last Design Update	Mo./Day/Yr.	Mo./Day/Yr.
	CITY ENGINEER			

City Project No.	Zone Map No.	Sheet	Of
729181	C-21	7	25

File Path: E:\WWWORK\20502\A
File Name: 20504DT.DWG
Plot Date: 04-20-2004
Plot Time: 3:11 pm

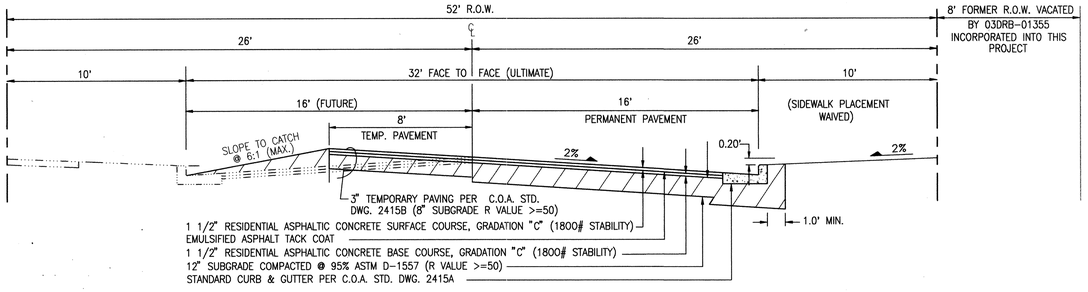

SECTION B–B (CARMEL AVENUE N.E.)

SCALE: 1" = 4'

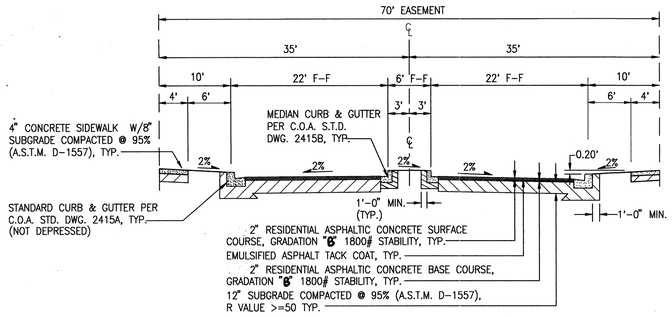

SECTION C–C (SAND VERBENA ENTRY)

SCALE: 1" = 10' HORIZONTAL
1" = 6' VERTICAL

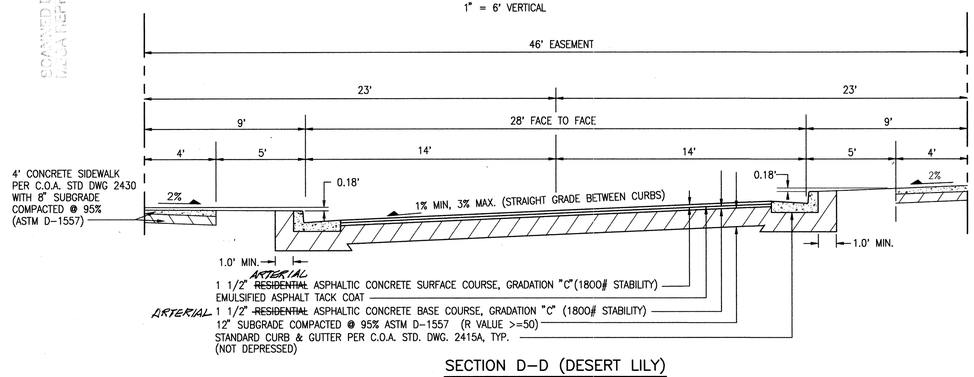

SECTION D–D (DESERT LILY)

SCALE: 1" = 4'

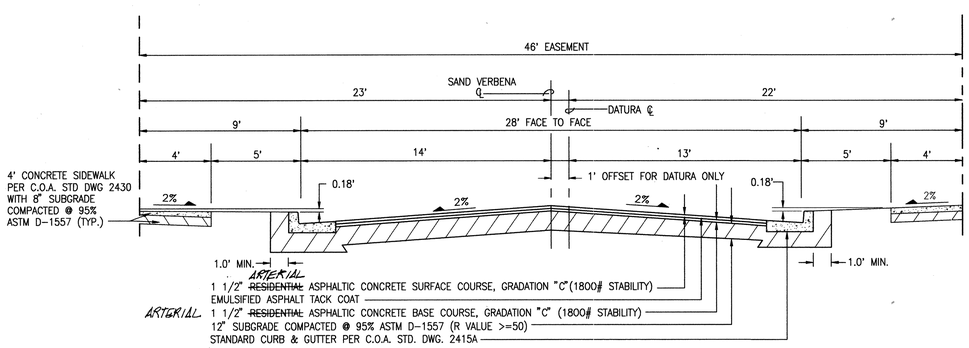

SECTION E–E (DATURA & SAND VERBENA)

SCALE: 1" = 4'

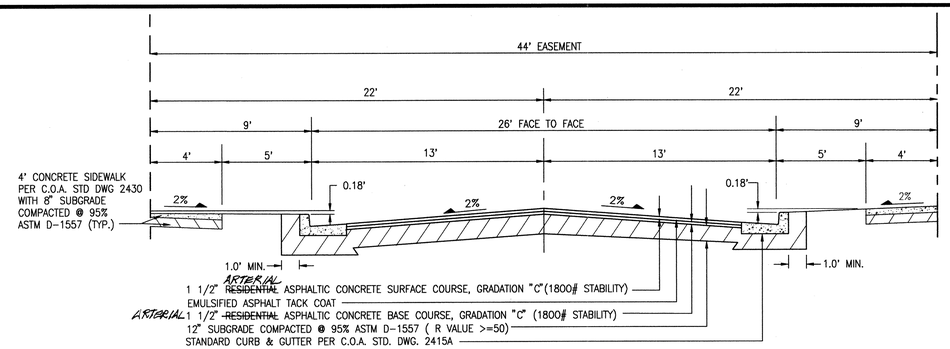

SECTION F–F SAND VERBENA & DATURA)

SCALE: 1" = 4'

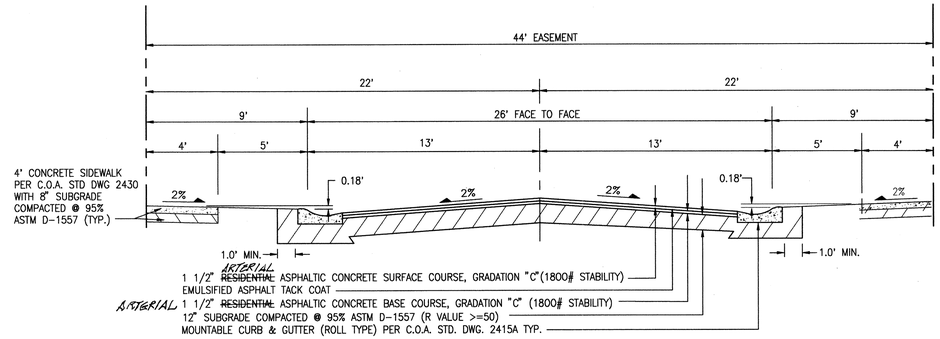

SECTION G–G (DATURA / CHIA)

SCALE: 1" = 4'

NOTE: SIDEWALKS SHOWN ON SECTIONS HEREON SHALL BE DEFERRED WHEN IDENTIFIED AS SUCH ON THE PLAN AND PROFILE SHEETS.

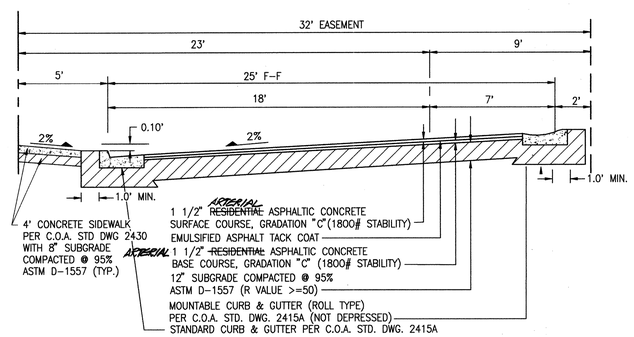

SECTION H–H (DESERT LILY)

SCALE: 1" = 4'

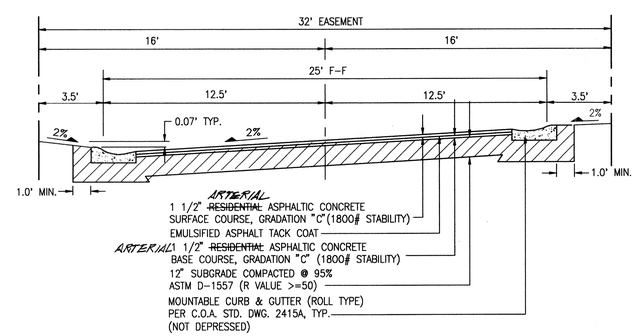

SECTION I–I

SCALE: 1" = 4'

SEE SHEET 1 FOR CERTIFICATION

RECORD DRAWING

SCANNED BY IMAGENET

File Path:	E:\WORK\2002\050\A\	Plot Date:	04-20-2004
File Name:	205054PS.DWG	Plot Time:	3:26 pm

AS BUILT INFORMATION

CONTRACTOR: CCM — DATE: 3-24-04
WORK STAKED BY: JMA — DATE: 2-2004
INSPECTOR'S ACCEPTANCE BY: RAY LEDGE — DATE: 10/04
FIELD VERIFICATION BY: J.G. — DATE: 12/04
DRAWINGS CORRECTED BY: JMA — DATE: 1/05

MICRO-FILM INFORMATION

RECORDED BY — DATE
NO.

BENCH MARKS

PROJECT BENCHMARK– ACS STATION "HEAVEN" (TIED TO PASEO DEL NORTE ROADWAY CONSTRUCTION IN 1999) PREVIOUS ELEVATION = 5378.79 FEET (NGVD 1929). THIS BENCHMARK HAS BEEN USED TO PROVIDE UNIFORMITY BETWEEN THIS SURVEY AND THE PREVIOUS SURVEYS CONDUCTED FOR RELATED NORTH DOMINGO BACA ARROYO PROJECTS. THE ELEVATION FOR ACS STATION "5-C20", AN ACS 1 3/4" ALUMINUM DISK STAMPED "ACS BM, 5-C20", EPOXIED TO THE TOP OF THE CONCRETE DROP INLET, AT THE NNE CURB RETURN IN THE NORTHEAST QUADRANT OF THE INTERSECTION OF VENTURA STREET AND ANAHEIM AVENUE N.E., BASED UPON THIS DATUM IS 5392.84 FEET (NGVD 1929). THE C.O.A. PUBLISHED ELEV. IS 5552.71 (NGVD 1929)

SURVEY INFORMATION

FIELD NOTES

NO.	BY	DATE
20502	JMA	03/03

ENGINEER'S SEAL

STATE OF NEW MEXICO — JAMES GRAEME MEANS — 15676 — REGISTERED PROFESSIONAL ENGINEER — 04/21/2004

RECORD DRAWING — JMA — 10/04

NO.	DATE	REMARKS	BY
		Revisions	

DESIGN

Designed By	G.M.	Date	01-04
Drawn By	S.G.H.	Date	01-04
Checked By	G.M.	Date	04-04

JEFF MORTENSEN & ASSOCIATES, INC.
6010-B MIDWAY PARK BLVD. N.E.
ALBUQUERQUE ☐ NEW MEXICO 87109
ENGINEERS ☐ SURVEYORS (505) 345-4250
FAX: 505 345-4254 ☐ ESTABLISHED 1977

2002.050.A.8

CITY OF ALBUQUERQUE
PUBLIC WORKS DEPARTMENT
ENGINEERING DEVELOPMENT GROUP

TITLE: OCOTILLO SUBDIVISION
STREET PAVING SECTIONS

Design Review Committee	City Engineer Approval	Last Design Update	Mo./Day/Yr.	Mo./Day/Yr.
	APR 14 2004 CITY ENGINEER			

City Project No.	Zone Map No.	Sheet	Of
729181	C-21	8	25

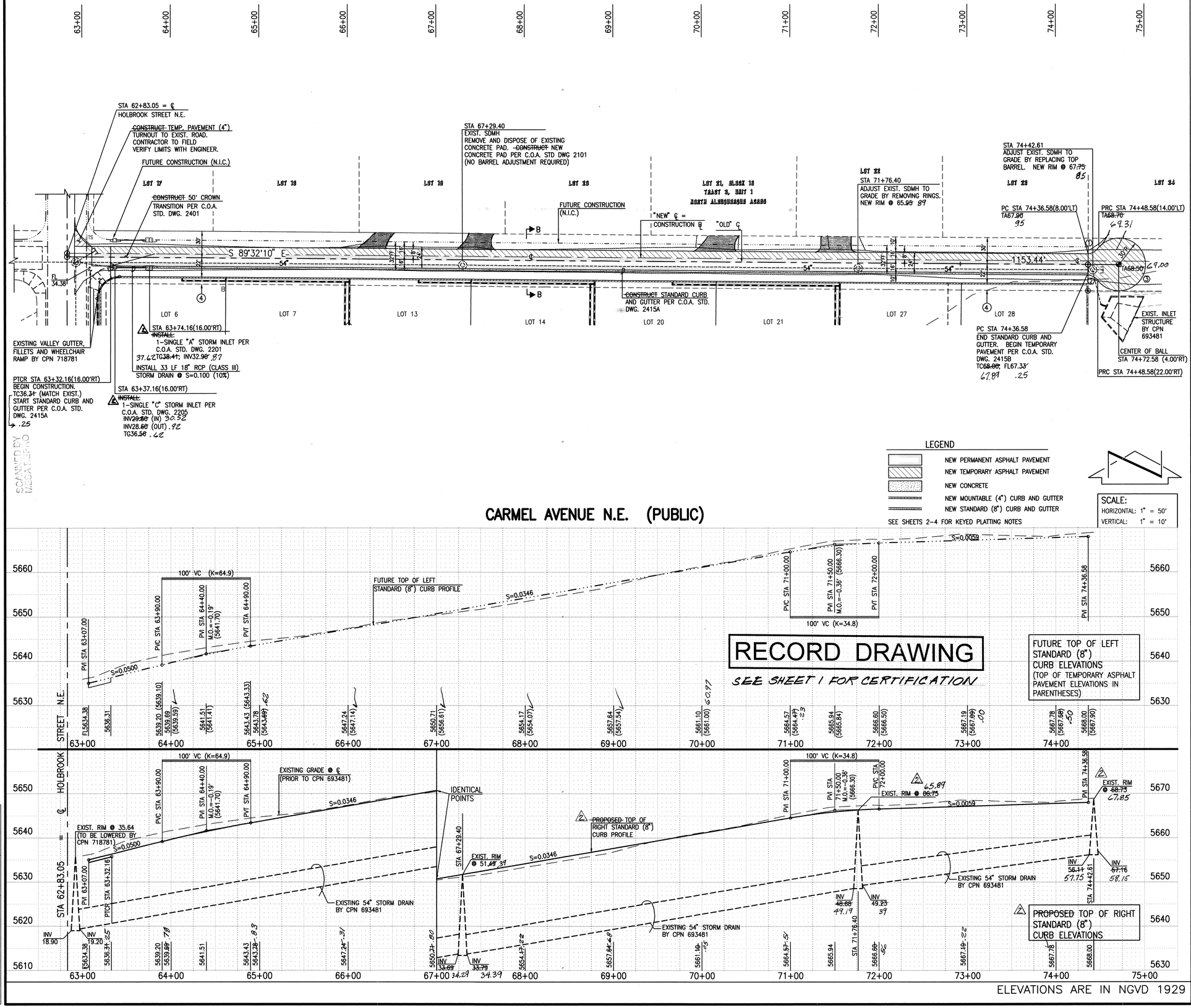

LEGEND

- NEW PERMANENT ASPHALT PAVEMENT
- NEW TEMPORARY ASPHALT PAVEMENT
- NEW CONCRETE
- NEW MOUNTABLE (4") CURB AND GUTTER
- NEW STANDARD (8") CURB AND GUTTER

SEE SHEETS 2-4 FOR KEYED PLATTING NOTES

SCALE:
HORIZONTAL: 1" = 50'
VERTICAL: 1" = 10'

CARMEL AVENUE N.E. (PUBLIC)

STREET PAVING IMPROVEMENTS:

1. ALL SLOPES AS SHOWN ON PROFILES ARE BASED ON STREET CENTERLINE STATIONING EXCEPT CUL-DE-SACS AND EYEBROWS WHERE STATIONING IS ALONG FACE-OF-CURB.
2. WHERE REMOVAL OF EXISTING CURB AND GUTTER, SIDEWALK OR PAVEMENT IS REQUIRED, THE CONTRACTOR SHALL SAWCUT AND/OR REMOVE TO THE NEAREST JOINT. CURB AND GUTTER AND SIDEWALK SHOWN AS EXISTING AND NOT TO BE REMOVED UNDER THIS CONTRACT WHICH IS DAMAGED OR DISPLACED BY THE CONTRACTOR SHALL BE REMOVED AND REPLACED BY THE CONTRACTOR PER C.O.A. STD. DWGS 2415A AND 2430, RESPECTIVELY, AT THE CONTRACTOR'S EXPENSE.
3. ALL DIMENSIONS OF CURB AND CURB RETURNS ARE SHOWN TO FACE-OF-CURB.
4. SIDEWALKS SHOWN HEREON AS "DEFERRED" SHALL BE CONSTRUCTED UNDER SEPARATE PERMIT.
5. ALL WHEELCHAIR RAMPS MUST BE CONSTRUCTED UNDER THIS WORK ORDER.
6. ALL CURB AND GUTTER SHOWN HEREON SHALL BE CONSTRUCTED IN ACCORDANCE WITH CITY OF ALBUQUERQUE STANDARD DRAWING 2415A UNLESS OTHERWISE NOTED.
7. UPON COMPLETION OF CONSTRUCTION, THE CITY OF ALBUQUERQUE WILL PROVIDE AND INSTALL ALL PUBLIC STREET SIGNS.
8. STRIPING BY CONTRACTOR WILL BE REQUIRED PRIOR TO FINAL ACCEPTANCE.

STORM DRAIN NOTES:

1. ALL STORM DRAIN TO BE CLASS III REINFORCED CONCRETE PIPE (RCP) UNLESS OTHERWISE NOTED.
2. ALL MANHOLES SHALL BE 6' DIAMETER TYPE 'C' PER C.O.A. STANDARD DRAWING 2101 UNLESS OTHERWISE NOTED.
3. ALL STATIONING SHOWN HEREON IS BASED ON STREET CENTERLINE UNLESS OTHERWISE NOTED. SLOPES ARE BASED ON TRUE LENGTH OF PIPE.
4. THE CONTRACTOR SHALL BE RESPONSIBLE FOR SELECTING APPROPRIATE MEANS AND METHODS TO EXCAVATE AND TRENCH AND INSTALL PIPE SO AS TO NOT EXCEED RIGHT-OF-WAY OR EASEMENT LIMITS, AND SO AS NOT TO INTERFERE WITH OTHER UTILITIES. THIS SHALL BE CONSIDERED INCIDENTAL TO TRENCHING, THEREFORE, NO SEPARATE PAYMENT WILL BE MADE.
5. THE CONTRACTOR SHALL BE RESPONSIBLE FOR PROTECTING, SUPPORTING AND REPLACING, IF DAMAGED, ALL OTHER UTILITIES ENCOUNTERED DURING CONSTRUCTION. THIS SHALL BE CONSIDERED INCIDENTAL TO TRENCHING, THEREFORE, NO SEPARATE PAYMENT WILL BE MADE.
6. FOR STORM DRAIN CONSTRUCTION, RCP PIPE JOINTS SHALL NOT BE GROUTED PRIOR TO FINAL INSPECTION. FINAL INSPECTION WILL DETERMINE JOINTS TO BE GROUTED FOR FINAL ACCEPTANCE OF THE CONSTRUCTION.

CURVE TABLE

CURVE	RADIUS	LENGTH	DELTA
1	15.00'	13.91'	53°07'48"
2	15.00'	13.91'	53°07'48"
3	30.00'	149.89'	286°15'37"

JEFF MORTENSEN & ASSOCIATES, INC.
6010-B MIDWAY PARK BLVD. N.E.
ALBUQUERQUE ☐ NEW MEXICO 87109
ENGINEERS ☐ SURVEYORS (505) 345-4250
FAX: 505 345-4254 ☐ ESTABLISHED 1977

2002.050~~48~~

CITY OF ALBUQUERQUE
PUBLIC WORKS DEPARTMENT
ENGINEERING DEVELOPMENT GROUP

TITLE: OCOTILLO SUBDIVISION
PAVING AND STORM DRAINAGE IMPROVEMENTS PLAN AND PROFILE
CARMEL AVENUE N.E.

Design Review Committee | City Engineer Approval | Last Design Update | Mo./Day/Yr. | Mo./Day/Yr.

City Project No. 729181 | Zone Map No. C-21 | Sheet 9 Of 25

AS BUILT INFORMATION
CONTRACTOR CCM
WORK STAKED BY
DATE ~~JUNE~~ OCT 2004
INSPECTORS CHANGES BY
DATE 10/04
FIELD INSPECTION BY JG
DATE 12/04
DRAWINGS CORRECTED BY JMA
DATE 1/05
MICRO-FILM INFORMATION
RECORDED BY
DATE
NO.

BENCH MARKS
PROJECT BENCHMARK- ACS STATION "HEAVEN" (TIED TO PASEO DEL NORTE ROAD-WAY CONSTRUCTION IN 1999) PREVIOUS ELEVATION = 5378.79 FEET (NGVD 1929). THIS BENCHMARK HAS BEEN USED TO PROVIDE UNIFORMITY BETWEEN THIS SURVEY AND THE PREVIOUS SURVEYS CONDUCTED FOR RELATED NORTH DOMINGO BACA ARROYO PROJECTS. THE ELEVATION FOR ACS STATION "5-C20", AN ACS 1 3/4" ALUMINUM DISK STAMPED "ACS BM, 5-C20", EPOXIED TO THE TOP OF THE CONCRETE DROP INLET, AT THE NNE CURB RETURN IN THE NORTHEAST QUADRANT OF THE INTER-SECTION OF VENTURA STREET AND ANAHEIM AVENUE N.E., BASED UPON THIS DATUM IS 5352.84 FEET (NGVD 1929). THE C.O.A. PUBLISHED ELEV. IS 5352.71 (NGVD 1929)

SURVEY INFORMATION
FIELD NOTES

NO.	BY	DATE
20502	JMA	03/03

ENGINEER'S SEAL
I HEREBY CERTIFY THAT THIS PLAN IS TRUE AND ACCURATE TO THE BEST OF MY KNOWLEDGE AND BELIEF
NEW MEXICO REGISTERED PROFESSIONAL ENGINEER (13675)
04/21/2004

RECORD DRAWING 10/04 JMA

NO.	DATE	REMARKS	BY
1		Revisions	

DESIGN
Designed By G.M. Date 01-2004
Drawn By S.G.H. Date 01-2004
Checked By G.M. Date 04-2004

File Path: D:\MWORK\20502\A\
File Name: 20502-PT1.DWG
Plot Date: 04-20-2004
Plot Time: 3:32 pm

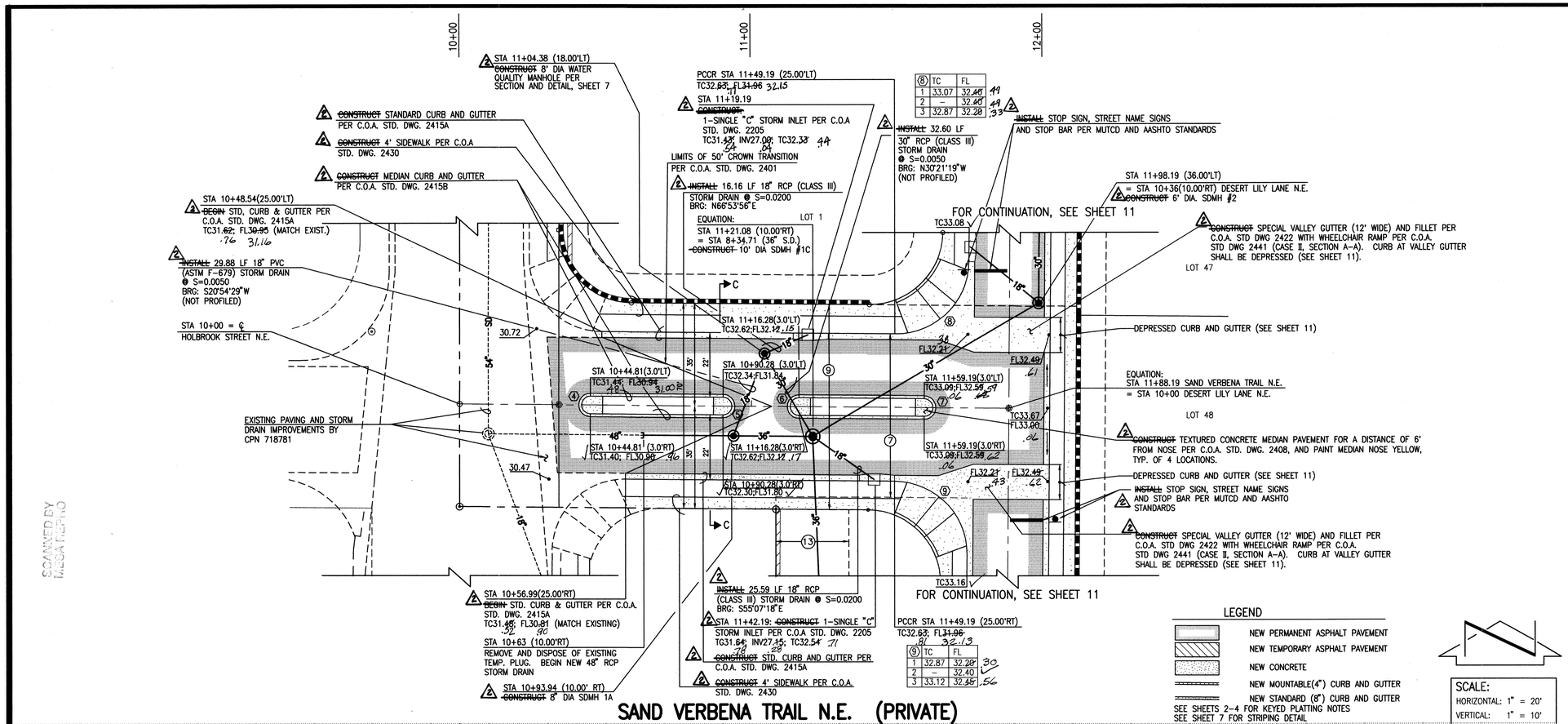

SAND VERBENA TRAIL N.E. (PRIVATE)

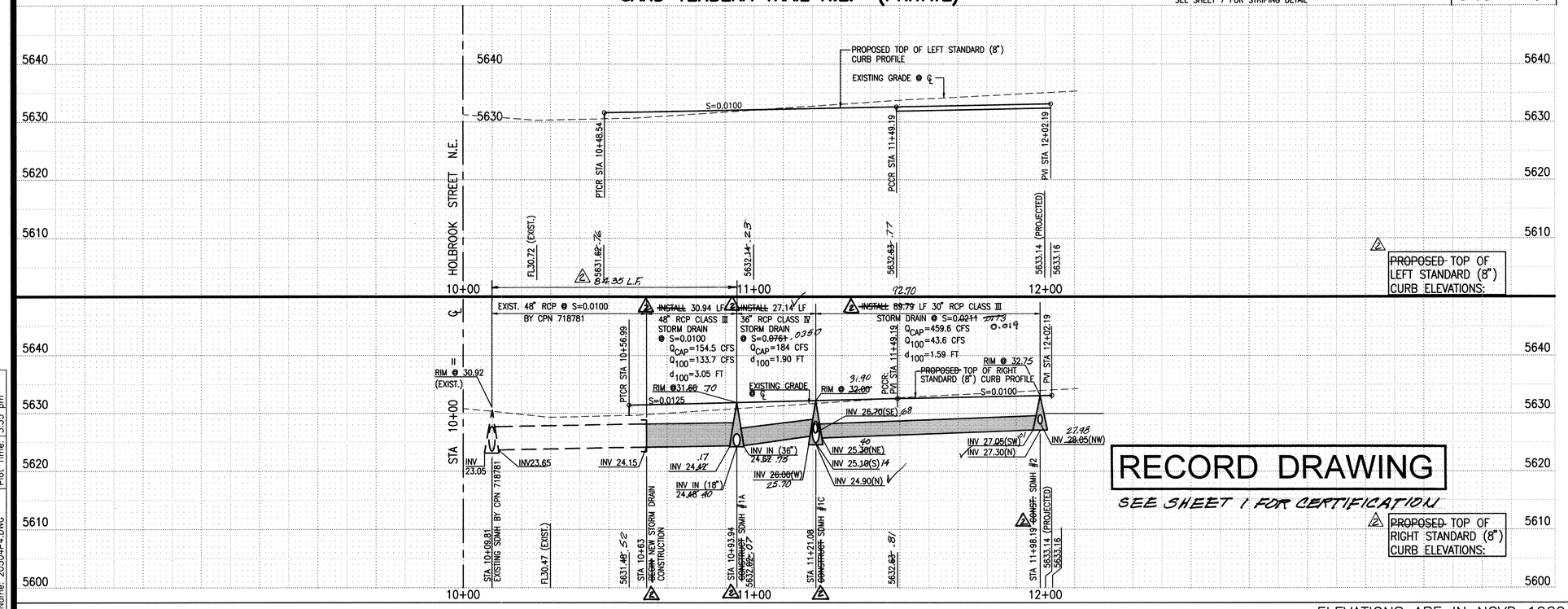

⑧	TC	FL
1	33.07	32.46 .49
2	–	32.46 .49
3	32.87	32.28 .33

⑨	TC	FL
1	32.87	32.28 .30
2	–	32.40 .56
3	33.12	32.45

STREET PAVING IMPROVEMENTS:

1. ALL SLOPES AS SHOWN ON PROFILES ARE BASED ON STREET CENTERLINE STATIONING EXCEPT CUL-DE-SACS AND EYEBROWS WHERE STATIONING IS ALONG FACE-OF-CURB.
2. WHERE REMOVAL OF EXISTING CURB AND GUTTER, SIDEWALK OR PAVEMENT IS REQUIRED, THE CONTRACTOR SHALL SAWCUT AND/OR REMOVE TO THE NEAREST JOINT. CURB AND GUTTER AND SIDEWALK SHOWN AS EXISTING AND NOT TO BE REMOVED UNDER THIS CONTRACT WHICH IS DAMAGED OR DISPLACED BY THE CONTRACTOR SHALL BE REMOVED AND REPLACED BY THE CONTRACTOR PER C.O.A. STD. DWGS 2415A AND 2430, RESPECTIVELY, AT THE CONTRACTOR'S EXPENSE.
3. ALL DIMENSIONS OF CURB AND CURB RETURNS ARE SHOWN TO FACE-OF-CURB.
4. SIDEWALKS SHOWN HEREON AS "DEFERRED" SHALL BE CONSTRUCTED UNDER SEPARATE PERMIT.
5. ALL WHEELCHAIR RAMPS MUST BE CONSTRUCTED UNDER THIS WORK ORDER.
6. ALL CURB AND GUTTER SHOWN HEREON SHALL BE CONSTRUCTED IN ACCORDANCE WITH CITY OF ALBUQUERQUE STANDARD DRAWING 2415A UNLESS OTHERWISE NOTED.
7. UPON COMPLETION OF CONSTRUCTION, THE DEVELOPER WILL PROVIDE AND INSTALL ALL PRIVATE STREET SIGNS.
8. STRIPING BY CONTRACTOR WILL BE REQUIRED PRIOR TO FINAL ACCEPTANCE.
9. SEE SHEET 7 FOR STRIPING DETAIL.

STORM DRAIN NOTES:

1. ALL STORM DRAIN TO BE CLASS III REINFORCED CONCRETE PIPE (RCP) UNLESS OTHERWISE NOTED.
2. ALL MANHOLES SHALL BE 6' DIAMETER TYPE 'C' PER C.O.A. STANDARD DRAWING 2101 UNLESS OTHERWISE NOTED.
3. ALL STATIONING SHOWN HEREON IS BASED ON STREET CENTERLINE UNLESS OTHERWISE NOTED. SLOPES ARE BASED ON TRUE LENGTH OF PIPE.
4. THE CONTRACTOR SHALL BE RESPONSIBLE FOR SELECTING APPROPRIATE MEANS AND METHODS TO EXCAVATE AND TRENCH AND INSTALL PIPE SO AS TO NOT EXCEED RIGHT-OF-WAY OR EASEMENT LIMITS, AND SO AS NOT TO INTERFERE WITH OTHER UTILITIES. THIS SHALL BE CONSIDERED INCIDENTAL TO TRENCHING, THEREFORE, NO SEPARATE PAYMENT WILL BE MADE.
5. THE CONTRACTOR SHALL BE RESPONSIBLE FOR PROTECTING, SUPPORTING AND REPLACING, IF DAMAGED, ALL OTHER UTILITIES ENCOUNTERED DURING CONSTRUCTION. THIS SHALL BE CONSIDERED INCIDENTAL TO TRENCHING, THEREFORE, NO SEPARATE PAYMENT WILL BE MADE.
6. FOR STORM DRAIN CONSTRUCTION, RCP PIPE JOINTS SHALL NOT BE GROUTED PRIOR TO FINAL INSPECTION. FINAL INSPECTION WILL DETERMINE JOINTS TO BE GROUTED FOR FINAL ACCEPTANCE OF THE CONSTRUCTION.

CURVE TABLE

CURVE	RADIUS	LENGTH	DELTA
④	3.00'	9.42'	180°00'00"
⑤	3.00'	9.42'	180°00'00"
⑥	3.00'	9.42'	180°00'00"
⑦	3.00'	9.42'	180°00'00"
⑧	25.00'	39.27'	90°00'00"
⑨	25.00'	39.27'	90°00'00"

AS BUILT INFORMATION
CONTRACTOR WORK STAKED BY: CCM DATE: 10/04
INSPECTOR'S AS-BUILT REVIEW BY: JMA RAB DATE: 10/04
FIELD VERIFICATION BY: JG DATE: 12/04
DRAWINGS CORRECTED BY: JMA DATE: 1/05
MICRO-FILM INFORMATION
RECORDED BY DATE
DATE NO.

BENCH MARKS
PROJECT BENCHMARK- ACS STATION "HEAVEN" (TIED TO PASEO DEL NORTE ROADWAY CONSTRUCTION IN 1999) PREVIOUS ELEVATION = 5378.79 FEET (NGVD 1929). THIS BENCHMARK HAS BEEN USED TO PROVIDE UNIFORMITY BETWEEN THIS SURVEY AND THE PREVIOUS SURVEYS CONDUCTED FOR RELATED NORTH DOMINGO BACA ARROYO PROJECTS. THE ELEVATION FOR ACS STATION "5-C20", AN ACS 1 3/4" ALUMINUM DISK STAMPED "ACS BM, 5-C20", EPOXIED TO THE TOP OF THE CONCRETE DROP INLET, AT THE NNE CURB RETURN IN THE NORTHEAST QUADRANT OF THE INTERSECTION OF VENTURA STREET AND ANAHEIM AVENUE N.E., BASED UPON THIS DATUM IS 5552.84 FEET (NGVD 1929). THE C.O.A. PUBLISHED ELEV. IS 5552.71 (NGVD 1929)

SURVEY INFORMATION
FIELD NOTES

NO.	BY	DATE
20502	JMA	03/03

ENGINEER'S SEAL
JMA
GRAEME MELANSON NEW MEXICO 3676 REGISTERED PROFESSIONAL ENGINEER
04/21/2004

NO.	DATE	REMARKS	BY
1	10/04	RECORD DRAWING	JMA

Revisions
DESIGN
Designed By G.M. Date 02-2004
Drawn By S.G.H. Date 02-2004
Checked By G.M. Date 04-2004

JEFF NORTENSEN & ASSOCIATES, INC.
6010-B MIDWAY PARK BLVD. N.E.
ALBUQUERQUE NEW MEXICO 87109
ENGINEERS SURVEYORS (505) 345-4250
FAX: 505 345-4254 ESTABLISHED 1977
2002.050.K.8

CITY OF ALBUQUERQUE
PUBLIC WORKS DEPARTMENT
ENGINEERING DEVELOPMENT GROUP

TITLE: OCOTILLO SUBDIVISION
PAVING AND STORM DRAINAGE IMPROVEMENTS PLAN AND PROFILE
SAND VERBENA TRAIL N.E. (ENTRY)

Design Review Committee | City Engineer Approval | Last Design Update | Mo./Day/Yr. | Mo./Day/Yr.

City Project No. 729181 | Zone Map No. C-21 | Sheet 10 Of 25

File Path: E:\WORK\KIM\2002\K\
File Name: 2050.4P4.DWG
Plot Date: 04-20-2004
Plot Time: 3:35 pm

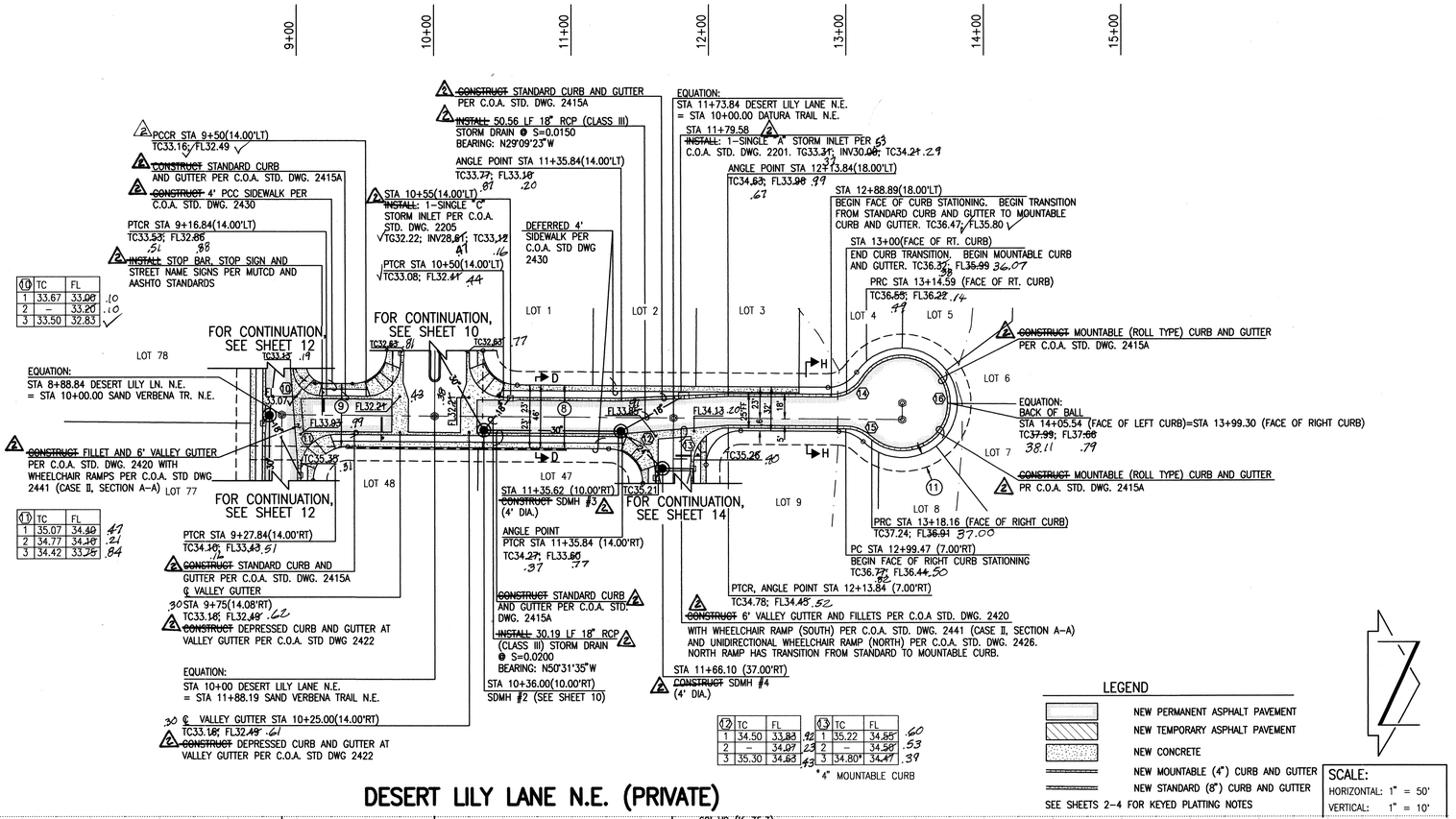

12	TC	FL
1	34.50	33.83
2	–	34.07
3	35.30	34.63

13	TC	FL
1	35.22	34.55
2	–	34.56*
3	34.80*	34.47

10	TC	FL
1	33.67	33.08
2	–	33.20
3	33.50	32.83

11	TC	FL
1	35.07	34.40
2	34.77	34.18
3	34.42	33.75

DESERT LILY LANE N.E. (PRIVATE)

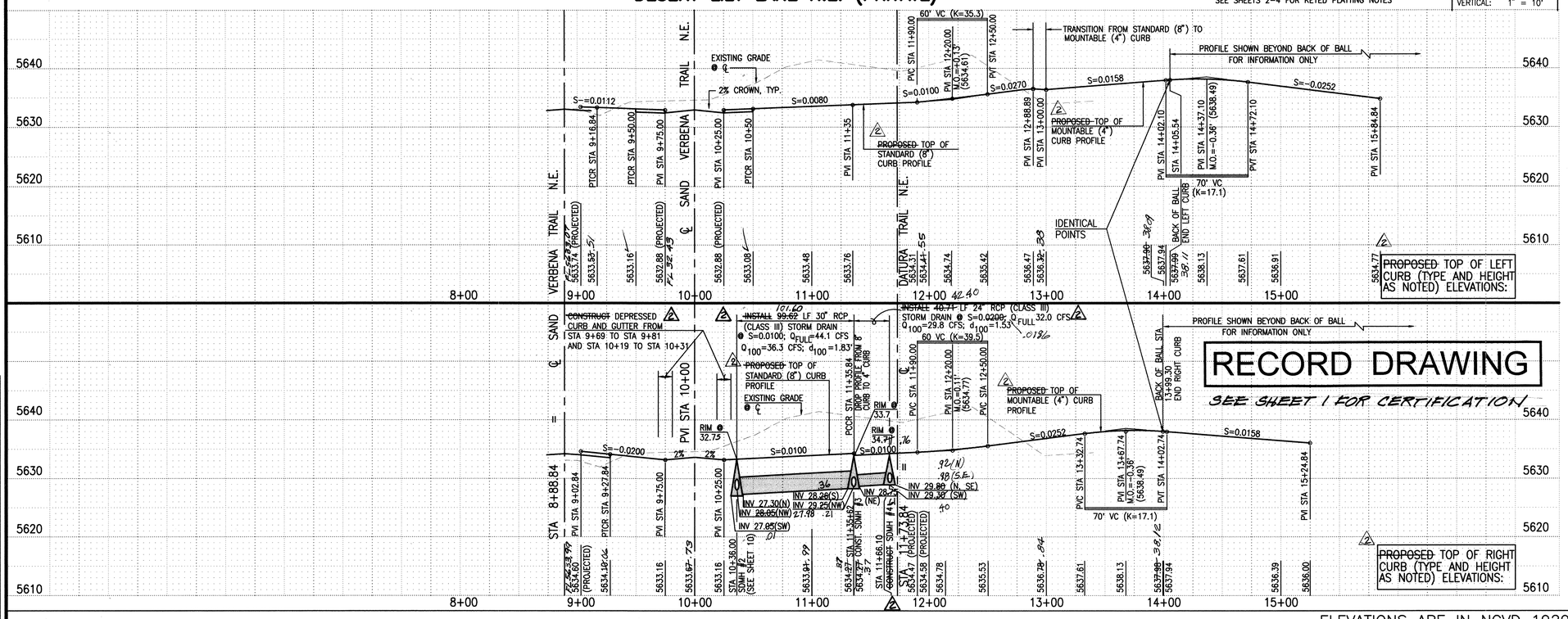

STREET PAVING IMPROVEMENTS:

1. ALL SLOPES AS SHOWN ON PROFILES ARE BASED ON STREET CENTERLINE STATIONING EXCEPT CUL-DE-SACS AND EYEBROWS WHERE STATIONING IS ALONG FACE-OF-CURB.
2. WHERE REMOVAL OF EXISTING CURB AND GUTTER, SIDEWALK OR PAVEMENT IS REQUIRED, THE CONTRACTOR SHALL SAWCUT AND/OR REMOVE TO THE NEAREST JOINT. CURB AND GUTTER AND SIDEWALK SHOWN AS EXISTING AND NOT TO BE REMOVED UNDER THIS CONTRACT WHICH IS DAMAGED OR DISPLACED BY THE CONTRACTOR SHALL BE REMOVED AND REPLACED BY THE CONTRACTOR PER C.O.A. STD. DWGS 2415A AND 2430, RESPECTIVELY, AT THE CONTRACTOR'S EXPENSE.
3. ALL DIMENSIONS OF CURB AND CURB RETURNS ARE SHOWN TO FACE-OF-CURB.
4. SIDEWALKS SHOWN HEREON AS "DEFERRED" SHALL BE CONSTRUCTED UNDER SEPARATE PERMIT.
5. ALL WHEELCHAIR RAMPS MUST BE CONSTRUCTED UNDER THIS WORK ORDER.
6. ALL CURB AND GUTTER SHOWN HEREON SHALL BE CONSTRUCTED IN ACCORDANCE WITH CITY OF ALBUQUERQUE STANDARD DRAWING 2415A UNLESS OTHERWISE NOTED.
7. UPON COMPLETION OF CONSTRUCTION, THE DEVELOPER WILL PROVIDE AND INSTALL ALL PRIVATE STREET SIGNS.
8. STRIPING BY CONTRACTOR WILL BE REQUIRED PRIOR TO FINAL ACCEPTANCE.

STORM DRAIN NOTES:

1. ALL STORM DRAIN TO BE CLASS III REINFORCED CONCRETE PIPE (RCP) UNLESS OTHERWISE NOTED.
2. ALL MANHOLES SHALL BE 6' DIAMETER TYPE 'C' PER C.O.A. STANDARD DRAWING 2101 UNLESS OTHERWISE NOTED.
3. ALL STATIONING SHOWN HEREON IS BASED ON STREET CENTERLINE UNLESS OTHERWISE NOTED. SLOPES ARE BASED ON TRUE LENGTH OF PIPE.
4. THE CONTRACTOR SHALL BE RESPONSIBLE FOR SELECTING APPROPRIATE MEANS AND METHODS TO EXCAVATE AND TRENCH AND INSTALL PIPE SO AS TO NOT EXCEED RIGHT-OF-WAY OR EASEMENT LIMITS, AND SO AS NOT TO INTERFERE WITH OTHER UTILITIES. THIS SHALL BE CONSIDERED INCIDENTAL TO TRENCHING, THEREFORE, NO SEPARATE PAYMENT WILL BE MADE.
5. THE CONTRACTOR SHALL BE RESPONSIBLE FOR PROTECTING, SUPPORTING AND REPLACING, IF DAMAGED, ALL OTHER UTILITIES ENCOUNTERED DURING CONSTRUCTION. THIS SHALL BE CONSIDERED INCIDENTAL TO TRENCHING, THEREFORE, NO SEPARATE PAYMENT WILL BE MADE.
6. FOR STORM DRAIN CONSTRUCTION, RCP PIPE JOINTS SHALL NOT BE GROUTED PRIOR TO FINAL INSPECTION. FINAL INSPECTION WILL DETERMINE JOINTS TO BE GROUTED FOR FINAL ACCEPTANCE OF THE CONSTRUCTION.

CURVE TABLE

CURVE	RADIUS	LENGTH	DELTA
10	20.00'	31.42'	90°00'00"
11	25.00'	39.27'	90°00'00"
12	25.00'	39.27'	90°00'00"
13	25.00'	39.27'	90°00'00"
14	25.00'	25.70'	58°53'28"
15	25.00'	18.69'	42°50'00"
16	35.00'	172.10'	281°43'28"

SURVEY INFORMATION

FIELD NOTES

NO.	BY	DATE
20502	JMA	03/03

BENCH MARKS

PROJECT BENCHMARK- ACS STATION "HEAVEN" (TIED TO PASEO DEL NORTE ROADWAY CONSTRUCTION IN 1999) PREVIOUS ELEVATION = 5378.79 FEET (NGVD 1929). THIS BENCHMARK HAS BEEN USED TO PROVIDE UNIFORMITY BETWEEN THIS SURVEY AND THE PREVIOUS SURVEYS CONDUCTED FOR RELATED NORTH DOMINGO BACA ARROYO PROJECTS. THE ELEVATION FOR ACS STATION "S-C20", AN ACS 1 3/4" ALUMINUM DISK STAMPED "ACS BM, S-C20", EPOXIED TO THE TOP OF THE CONCRETE DROP INLET, AT THE NNE CURB RETURN IN THE NORTHEAST QUADRANT OF THE INTERSECTION OF VENTURA STREET AND ANAHEIM AVENUE N.E., BASED UPON THIS DATUM IS 5352.84 FEET (NGVD 1929). THE C.O.A. PUBLISHED ELEV. IS 5352.71 (NGVD 1929)

AS BUILT INFORMATION

CONTRACTOR: ECM
WORK STAKED BY: PO
INSPECTOR'S ACCEPTANCE BY: JMA
FIELD DOCUMENTATION BY: JCS
CORRECTIONS CORRECTED BY: JMA
DATE: ~~JUNE 07~~ 2004
DATE 10/04
DATE 12/04
DATE 1/05

MICRO-FILM INFORMATION

RECORDED BY
DATE
NO.

ENGINEER'S SEAL

JAMES MEANS LEAKE
NEW MEXICO
13676
REGISTERED PROFESSIONAL ENGINEER
04/21/2004

JMA

RECORD DRAWING

NO.	DATE	REMARKS
1	10/04	Revisions

DESIGN

		Date
Designed By	G.M.	02-2004
Drawn By	S.G.H.	02-2004
Checked By	G.M.	04-2004

JEFF MORTENSEN & ASSOCIATES, INC.
6010-B MIDWAY PARK BLVD. N.E.
ALBUQUERQUE NEW MEXICO 87109
ENGINEERS SURVEYORS (505) 345-4250
FAX: 505 345-4254 ESTABLISHED 1977

2002.050A 8

CITY OF ALBUQUERQUE
PUBLIC WORKS DEPARTMENT
ENGINEERING DEVELOPMENT GROUP

TITLE: OCOTILLO SUBDIVISION
PAVING AND STORM DRAINAGE IMPROVEMENTS PLAN AND PROFILE
DESERT LILY LANE N.E.

Design Review Committee | City Engineer Approval | Last Design Update | Mo./Day/Yr. | Mo./Day/Yr.

City Project No. 729181 | Zone Map No. C-21 | Sheet 11 Of 25

File Path: E:\WORKING\20502A\
File Name: 20502AP2.DWG
Plot Date: 04-20-2004
Plot Time: 3:39 pm

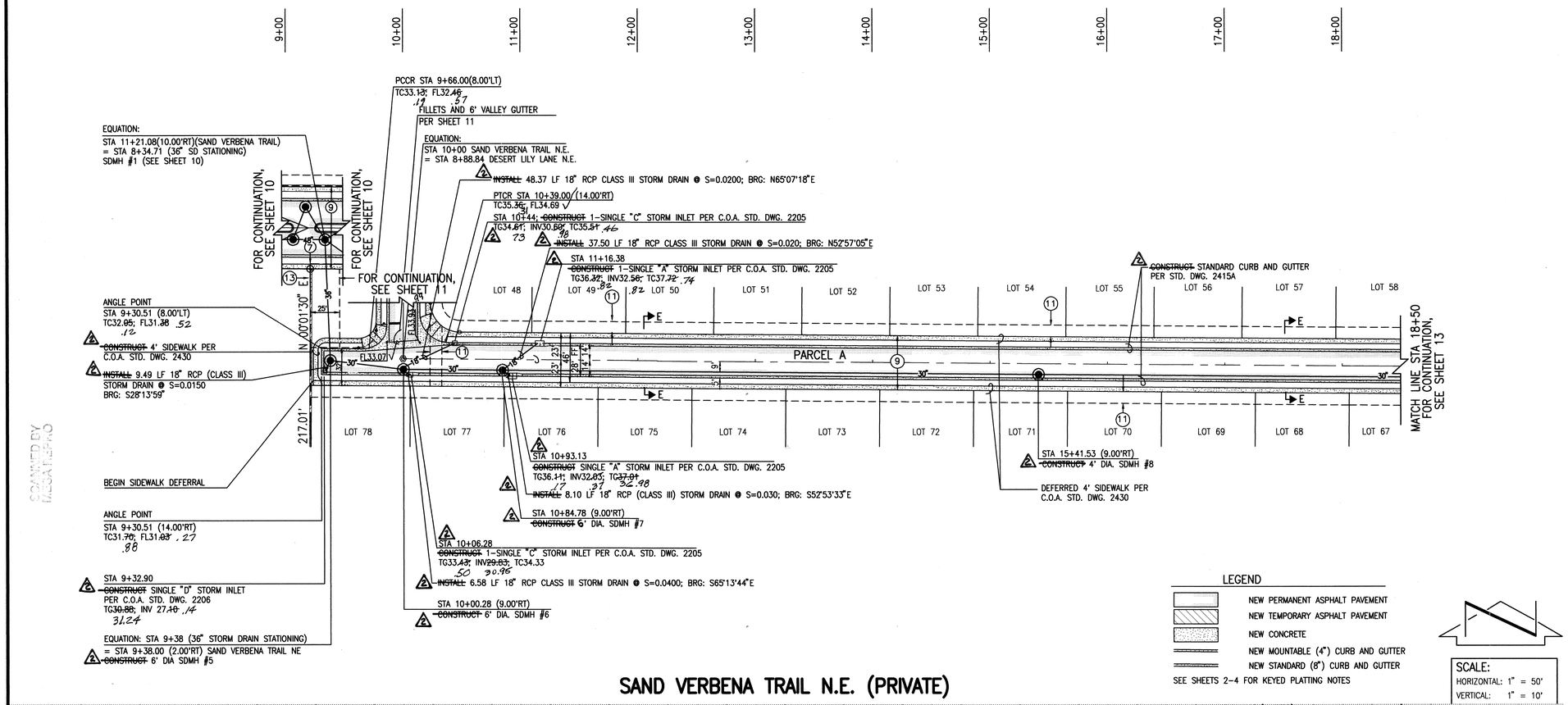

SAND VERBENA TRAIL N.E. (PRIVATE)

LEGEND

- NEW PERMANENT ASPHALT PAVEMENT
- NEW TEMPORARY ASPHALT PAVEMENT
- NEW CONCRETE
- NEW MOUNTABLE (4") CURB AND GUTTER
- NEW STANDARD (8") CURB AND GUTTER

SEE SHEETS 2-4 FOR KEYED PLATTING NOTES

SCALE:
HORIZONTAL: 1" = 50'
VERTICAL: 1" = 10'

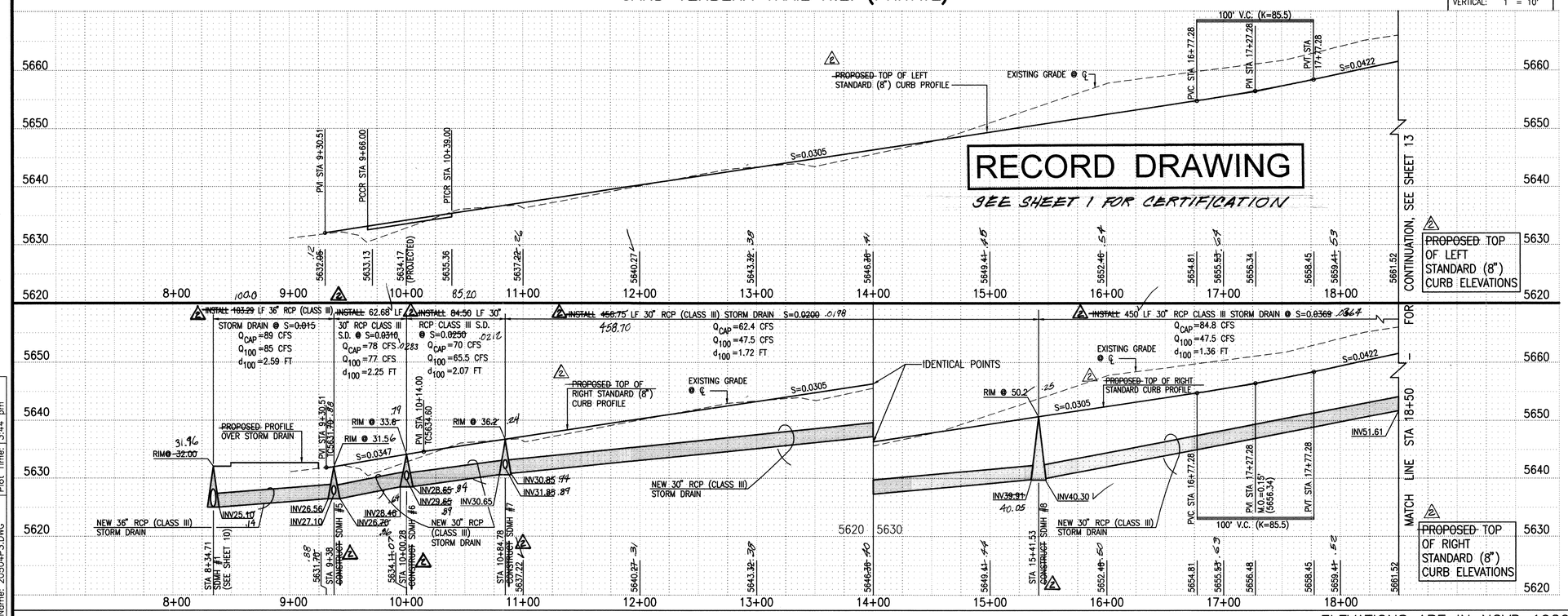

STREET PAVING IMPROVEMENTS:

1. ALL SLOPES AS SHOWN ON PROFILES ARE BASED ON STREET CENTERLINE STATIONING EXCEPT CUL-DE-SACS AND EYEBROWS WHERE STATIONING IS ALONG FACE-OF-CURB.
2. WHERE REMOVAL OF EXISTING CURB AND GUTTER, SIDEWALK OR PAVEMENT IS REQUIRED, THE CONTRACTOR SHALL SAWCUT AND/OR REMOVE TO THE NEAREST JOINT. CURB AND GUTTER AND SIDEWALK SHOWN AS EXISTING AND NOT TO BE REMOVED UNDER THIS CONTRACT WHICH IS DAMAGED OR DISPLACED BY THE CONTRACTOR SHALL BE REMOVED AND REPLACED BY THE CONTRACTOR PER C.O.A. STD. DWGS 2415A AND 2430, RESPECTIVELY, AT THE CONTRACTOR'S EXPENSE.
3. ALL DIMENSIONS OF CURB AND CURB RETURNS ARE SHOWN TO FACE-OF-CURB.
4. SIDEWALKS SHOWN HEREON AS "DEFERRED" SHALL BE CONSTRUCTED UNDER SEPARATE PERMIT.
5. ALL WHEELCHAIR RAMPS MUST BE CONSTRUCTED UNDER THIS WORK ORDER.
6. ALL CURB AND GUTTER SHOWN HEREON SHALL BE CONSTRUCTED IN ACCORDANCE WITH CITY OF ALBUQUERQUE STANDARD DRAWING 2415A UNLESS OTHERWISE NOTED.
7. UPON COMPLETION OF CONSTRUCTION, THE DEVELOPER WILL PROVIDE AND INSTALL ALL PRIVATE STREET SIGNS.
8. STRIPING BY CONTRACTOR WILL BE REQUIRED PRIOR TO FINAL ACCEPTANCE.

STORM DRAIN NOTES:

1. ALL STORM DRAIN TO BE CLASS III REINFORCED CONCRETE PIPE (RCP) UNLESS OTHERWISE NOTED.
2. ALL MANHOLES SHALL BE 6' DIAMETER TYPE 'C' PER C.O.A. STANDARD DRAWING 2101 UNLESS OTHERWISE NOTED.
3. ALL STATIONING SHOWN HEREON IS BASED ON STREET CENTERLINE UNLESS OTHERWISE NOTED. SLOPES ARE BASED ON TRUE LENGTH OF PIPE.
4. THE CONTRACTOR SHALL BE RESPONSIBLE FOR SELECTING APPROPRIATE MEANS AND METHODS TO EXCAVATE AND TRENCH AND INSTALL PIPE SO AS TO NOT EXCEED RIGHT-OF-WAY OR EASEMENT LIMITS, AND SO AS NOT TO INTERFERE WITH OTHER UTILITIES. THIS SHALL BE CONSIDERED INCIDENTAL TO TRENCHING, THEREFORE, NO SEPARATE PAYMENT WILL BE MADE.
5. THE CONTRACTOR SHALL BE RESPONSIBLE FOR PROTECTING, SUPPORTING AND REPLACING, IF DAMAGED, ALL OTHER UTILITIES ENCOUNTERED DURING CONSTRUCTION. THIS SHALL BE CONSIDERED INCIDENTAL TO TRENCHING, THEREFORE, NO SEPARATE PAYMENT WILL BE MADE.
6. FOR STORM DRAIN CONSTRUCTION, RCP PIPE JOINTS SHALL NOT BE GROUTED PRIOR TO FINAL INSPECTION. FINAL INSPECTION WILL DETERMINE JOINTS TO BE GROUTED FOR FINAL ACCEPTANCE OF THE CONSTRUCTION.

AS BUILT INFORMATION

CONTRACTOR	CCM	DATE: 4-27-2004
WORK STAKED BY	JRA	
ACCESSORIES INSTALLED BY	RON SANTIAGO	DATE 10/04
FIELD VERIFICATION BY	JG	DATE 12/04
DRAWINGS CORRECTED BY	JMA	DATE 1/05
MICRO-FILM INFORMATION		
RECORDED BY		DATE
DATE		NO.

BENCH MARKS

PROJECT BENCHMARK- ACS STATION "HEAVEN" (TIED TO PASEO DEL NORTE ROADWAY CONSTRUCTION IN 1999) PREVIOUS ELEVATION = 5378.79 FEET (NGVD 1929). THIS BENCHMARK HAS BEEN USED TO PROVIDE UNIFORMITY BETWEEN THIS SURVEY AND THE PREVIOUS SURVEYS CONDUCTED FOR RELATED NORTH DOMINGO BACA ARROYO PROJECTS. THE ELEVATION FOR ACS STATION "5-C20", AN ACS 1 3/4" ALUMINUM DISK STAMPED "ACS BM, 5-C20", EPOXIED TO THE TOP OF THE CONCRETE DROP INLET, AT THE NNE CURB RETURN IN THE NORTHEAST QUADRANT OF THE INTERSECTION OF VENTURA STREET AND ANAHEIM AVENUE N.E., BASED UPON THIS DATUM IS 5552.84 FEET (NGVD 1929). THE C.O.A. PUBLISHED ELEV. IS 5552.71 (NGVD 1929)

SURVEY INFORMATION

FIELD NOTES

NO.	BY	DATE
20502	JMA	03/03

ENGINEER'S SEAL

LEROY GRAEME MEANS, NEW MEXICO 13675, REGISTERED PROFESSIONAL ENGINEER
04/21/2004

RECORD DRAWING

NO.	DATE	REMARKS	BY
1	10/04	Revisions	JMA

DESIGN

		Date
Designed By	G.M.	01-2004
Drawn By	S.G.H.	01-2004
Checked By	G.M.	04-2004

JMA 2002.0504 8

JEFF MORTENSEN & ASSOCIATES, INC.
☐ 6010-B MIDWAY PARK BLVD. N.E.
☐ ALBUQUERQUE ☐ NEW MEXICO 87109
ENGINEERS ☐ SURVEYORS (505) 345-4250
☐ FAX: 505 345-4254 ☐ ESTABLISHED 1977

CITY OF ALBUQUERQUE
PUBLIC WORKS DEPARTMENT
ENGINEERING DEVELOPMENT GROUP

TITLE:
OCOTILLO SUBDIVISION
PAVING AND STORM DRAINAGE IMPROVEMENTS PLAN AND PROFILE
SAND VERBENA TRAIL N.E. STA 8+34.71 TO STA 18+50.00

Design Review Committee	City Engineer Approval	Last Design Update	Mo./Day/Yr.	Mo./Day/Yr.
	CITY ENGINEER			

City Project No.	Zone Map No.	Sheet	Of
729181	C-21	12	25

File Path: E:\MYWORK\20502\A\
File Name: 20502AP3.DWG
Plot Date: 04-20-2004
Plot Time: 3:44 pm

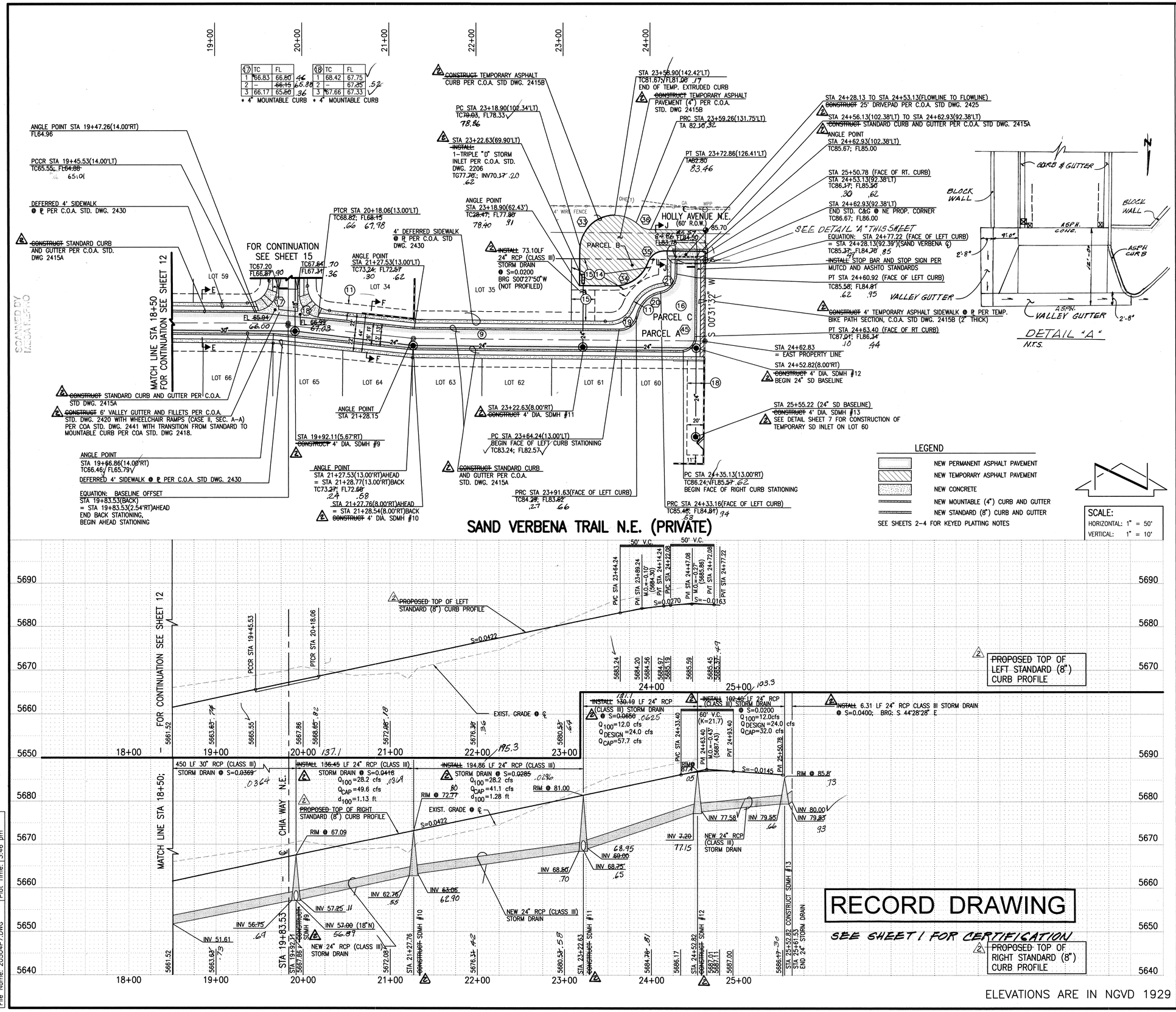

17	TC	FL
1	66.83	66.60
2	–	66.15
3	66.17	65.80

• 4" MOUNTABLE CURB

18	TC	FL
1	68.42	67.75
2	–	67.35
3	67.66	67.33

• 4" MOUNTABLE CURB

CURVE TABLE

CURVE	RADIUS	LENGTH	DELTA
17	25.00'	39.27'	90°00'00"
18	25.00'	36.88'	84°31'09"
19	20.00'	27.39'	78°27'47"
20	35.00'	41.53'	67°59'14"
21	20.00'	27.76'	79°31'28"
33	40.00'	92.74'	132°50'00"
34	40.00'	49.22'	70°30'14"
35	20.00'	24.62'	70°31'44"
36	20.00'	14.95'	42°50'00"
45	18.00'	28.27'	90°00'00"

STREET PAVING IMPROVEMENTS:

1. ALL SLOPES AS SHOWN ON PROFILES ARE BASED ON STREET CENTERLINE STATIONING EXCEPT CUL-DE-SACS AND EYEBROWS WHERE STATIONING IS ALONG FACE-OF-CURB.
2. WHERE REMOVAL OF EXISTING CURB AND GUTTER, SIDEWALK OR PAVEMENT IS REQUIRED, THE CONTRACTOR SHALL SAWCUT AND/OR REMOVE TO THE NEAREST JOINT. CURB AND GUTTER AND SIDEWALK SHOWN AS EXISTING AND NOT TO BE REMOVED UNDER THIS CONTRACT WHICH IS DAMAGED OR DISPLACED BY THE CONTRACTOR SHALL BE REMOVED AND REPLACED BY THE CONTRACTOR PER C.O.A. STD. DWGS 2415A AND 2430, RESPECTIVELY, AT THE CONTRACTOR'S EXPENSE.
3. ALL DIMENSIONS OF CURB AND CURB RETURNS ARE SHOWN TO FACE-OF-CURB.
4. SIDEWALKS SHOWN HEREON AS "DEFERRED" SHALL BE CONSTRUCTED UNDER SEPARATE PERMIT.
5. ALL WHEELCHAIR RAMPS MUST BE CONSTRUCTED UNDER THIS WORK ORDER.
6. ALL CURB AND GUTTER SHOWN HEREON SHALL BE CONSTRUCTED IN ACCORDANCE WITH CITY OF ALBUQUERQUE STANDARD DRAWING 2415A UNLESS OTHERWISE NOTED.
7. UPON COMPLETION OF CONSTRUCTION, THE DEVELOPER WILL PROVIDE AND INSTALL ALL PRIVATE STREET SIGNS.
8. STRIPING BY CONTRACTOR WILL BE REQUIRED PRIOR TO FINAL ACCEPTANCE.

STORM DRAIN NOTES:

1. ALL STORM DRAIN TO BE CLASS III REINFORCED CONCRETE PIPE (RCP) UNLESS OTHERWISE NOTED.
2. ALL MANHOLES SHALL BE 6' DIAMETER TYPE "C" PER C.O.A. STANDARD DRAWING 2101 UNLESS OTHERWISE NOTED.
3. ALL STATIONING SHOWN HEREON IS BASED ON STREET CENTERLINE UNLESS OTHERWISE NOTED. SLOPES ARE BASED ON TRUE LENGTH OF PIPE.
4. THE CONTRACTOR SHALL BE RESPONSIBLE FOR SELECTING APPROPRIATE MEANS AND METHODS TO EXCAVATE AND TRENCH AND INSTALL PIPE SO AS TO NOT EXCEED RIGHT-OF-WAY OR EASEMENT LIMITS, AND SO AS NOT TO INTERFERE WITH OTHER UTILITIES. THIS SHALL BE CONSIDERED INCIDENTAL TO TRENCHING, THEREFORE, NO SEPARATE PAYMENT WILL BE MADE.
5. THE CONTRACTOR SHALL BE RESPONSIBLE FOR PROTECTING, SUPPORTING AND REPLACING, IF DAMAGED, ALL OTHER UTILITIES ENCOUNTERED DURING CONSTRUCTION. THIS SHALL BE CONSIDERED INCIDENTAL TO TRENCHING, THEREFORE, NO SEPARATE PAYMENT WILL BE MADE.
6. FOR STORM DRAIN CONSTRUCTION, RCP PIPE JOINTS SHALL NOT BE GROUTED PRIOR TO FINAL INSPECTION. FINAL INSPECTION WILL DETERMINE JOINTS TO BE GROUTED FOR FINAL ACCEPTANCE OF THE CONSTRUCTION.

AS BUILT INFORMATION

CONTRACTOR: CCM DATE: JUN 27 2004
WORK STAKED BY: JMA DATE: 10/04
INSPECTOR'S ACCEPTANCE BY: J.G. DATE: 12/04
FIELD VERIFICATION BY: JMA DATE: 1/05
DRAWINGS CORRECTED BY: MICRO-FILM DATE:
RECEIVED BY: DATE:
NO.:

BENCH MARKS

PROJECT BENCHMARK- ACS STATION "HEAVEN" (TIED TO PASEO DEL NORTE ROADWAY CONSTRUCTION IN 1999) PREVIOUS ELEVATION = 5378.79 FEET (NGVD 1929). THIS BENCHMARK HAS BEEN USED TO PROVIDE UNIFORMITY BETWEEN THIS SURVEY AND THE PREVIOUS SURVEYS CONDUCTED FOR RELATED NORTH DOMINGO BACA ARROYO PROJECTS. THE ELEVATION FOR ACS STATION "5-C20", AN ACS 1 3/4" ALUMINUM DISK STAMPED "ACS BM, 5-C20", EPOXIED TO THE TOP OF THE CONCRETE DROP INLET, AT THE NNE CURB RETURN IN THE NORTHEAST QUADRANT OF THE INTERSECTION OF VENTURA STREET AND ANAHEIM AVENUE N.E., BASED UPON THIS DATUM IS 5552.84 FEET (NGVD 1929). THE C.O.A. PUBLISHED ELEV. IS 5552.71 (NGVD 1929)

SURVEY INFORMATION

FIELD NOTES

NO.	BY	DATE
20502	JMA	03/03

ENGINEER'S SEAL

JMA

NO.	DATE	REMARKS	BY
A	10/04	RECORD DRAWING	JMA

Revisions

DESIGN		
Designed By	G.M.	Date 02-2004
Drawn By	R.R.W.	Date 03-2004
Checked By	G.M.	Date 04-2004

jma 2002.050.A.8

CITY OF ALBUQUERQUE
PUBLIC WORKS DEPARTMENT
ENGINEERING DEVELOPMENT GROUP

TITLE: OCOTILLO SUBDIVISION
PAVING AND STORM DRAINAGE IMPROVEMENTS PLAN AND PROFILE
SAND VERBENA TRAIL N.E. STA 18+50 TO STA 25+61.53

Design Review Committee | City Engineer Approval | Last Design Update | No./Date/Tr. | No./Date/Tr.

City Project No. 729181 | Zone Map No. C-21 | Sheet 13 Of 25

File Path: E:\MWORK\20050\A
File Name: 20504P7.DWG
Plot Date: 04-20-2004
Plot Time: 3:46 pm

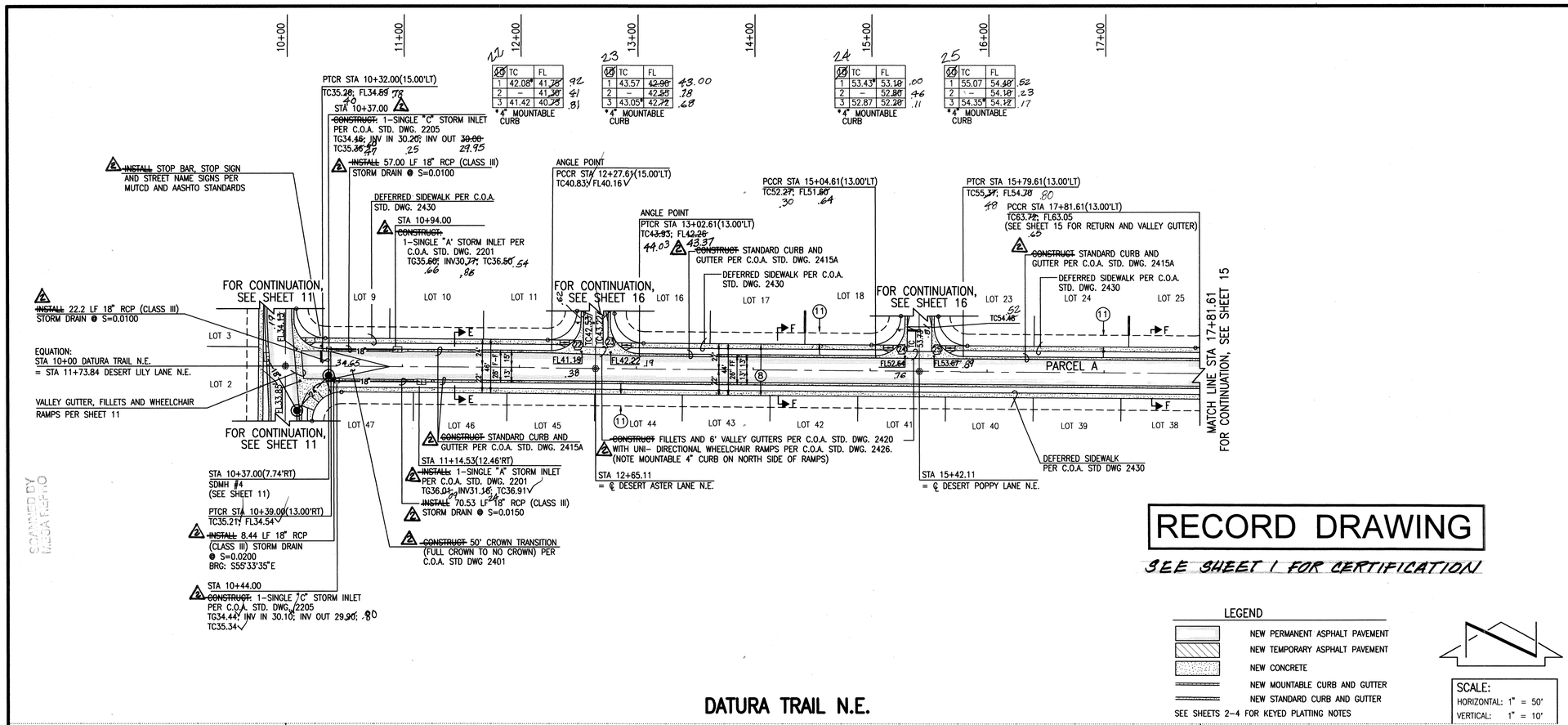

STREET PAVING IMPROVEMENTS:

1. ALL SLOPES AS SHOWN ON PROFILES ARE BASED ON STREET CENTERLINE STATIONING EXCEPT CUL-DE-SACS AND EYEBROWS WHERE STATIONING IS ALONG FACE-OF-CURB.
2. WHERE REMOVAL OF EXISTING CURB AND GUTTER, SIDEWALK OR PAVEMENT IS REQUIRED, THE CONTRACTOR SHALL SAWCUT AND/OR REMOVE TO THE NEAREST JOINT. CURB AND GUTTER AND SIDEWALK SHOWN AS EXISTING AND NOT TO BE REMOVED UNDER THIS CONTRACT WHICH IS DAMAGED OR DISPLACED BY THE CONTRACTOR SHALL BE REMOVED AND REPLACED BY THE CONTRACTOR PER C.O.A. STD. DWGS 2415A AND 2430, RESPECTIVELY, AT THE CONTRACTOR'S EXPENSE.
3. ALL DIMENSIONS OF CURB AND CURB RETURNS ARE SHOWN TO FACE-OF-CURB.
4. SIDEWALKS SHOWN HEREON AS "DEFERRED" SHALL BE CONSTRUCTED UNDER SEPARATE PERMIT.
5. ALL WHEELCHAIR RAMPS MUST BE CONSTRUCTED UNDER THIS WORK ORDER.
6. ALL CURB AND GUTTER SHOWN HEREON SHALL BE CONSTRUCTED IN ACCORDANCE WITH CITY OF ALBUQUERQUE STANDARD DRAWING 2415A UNLESS OTHERWISE NOTED.
7. UPON COMPLETION OF CONSTRUCTION, THE DEVELOPER WILL PROVIDE AND INSTALL ALL PRIVATE STREET SIGNS.
8. STRIPING BY CONTRACTOR WILL BE REQUIRED PRIOR TO FINAL ACCEPTANCE.

STORM DRAIN NOTES:

1. ALL STORM DRAIN TO BE CLASS III REINFORCED CONCRETE PIPE (RCP) UNLESS OTHERWISE NOTED.
2. ALL MANHOLES SHALL BE 6' DIAMETER TYPE 'C' PER C.O.A. STANDARD DRAWING 2101 UNLESS OTHERWISE NOTED.
3. ALL STATIONING SHOWN HEREON IS BASED ON STREET CENTERLINE UNLESS OTHERWISE NOTED. SLOPES ARE BASED ON TRUE LENGTH OF PIPE.
4. THE CONTRACTOR SHALL BE RESPONSIBLE FOR SELECTING APPROPRIATE MEANS AND METHODS TO EXCAVATE AND TRENCH AND INSTALL PIPE SO AS TO NOT EXCEED RIGHT-OF-WAY OR EASEMENT LIMITS, AND SO AS NOT TO INTERFERE WITH OTHER UTILITIES. THIS SHALL BE CONSIDERED INCIDENTAL TO TRENCHING, THEREFORE, NO SEPARATE PAYMENT WILL BE MADE.
5. THE CONTRACTOR SHALL BE RESPONSIBLE FOR PROTECTING, SUPPORTING AND REPLACING, IF DAMAGED, ALL OTHER UTILITIES ENCOUNTERED DURING CONSTRUCTION. THIS SHALL BE CONSIDERED INCIDENTAL TO TRENCHING, THEREFORE, NO SEPARATE PAYMENT WILL BE MADE.
6. FOR STORM DRAIN CONSTRUCTION, RCP PIPE JOINTS SHALL NOT BE GROUTED PRIOR TO FINAL INSPECTION. FINAL INSPECTION WILL DETERMINE JOINTS TO BE GROUTED FOR FINAL ACCEPTANCE OF THE CONSTRUCTION.

CURVE TABLE

CURVE	RADIUS	LENGTH	DELTA
22	25.00'	39.27'	90°00'00"
23	25.00'	39.27'	90°00'00"
24	25.00'	39.27'	90°00'00"
25	25.00'	39.27'	90°00'00"

JMA
JEFF MORTENSEN & ASSOCIATES, INC.
6010-B MIDWAY PARK BLVD. N.E.
ALBUQUERQUE NEW MEXICO 87109
ENGINEERS SURVEYORS (505) 345-4250
FAX: 505 345-4254 ESTABLISHED 1977
2002.050.48

CITY OF ALBUQUERQUE
PUBLIC WORKS DEPARTMENT
ENGINEERING DEVELOPMENT GROUP

TITLE: OCOTILLO SUBDIVISION
PAVING AND STORM DRAINAGE IMPROVEMENTS PLAN AND PROFILE
DATURA TRAIL N.E.

Design Review Committee | City Engineer Approval | Last Design Update | Mo./Day/Yr. | Mo./Day/Yr.

City Project No. 729181 | Zone Map No. C-21 | Sheet 14 Of 25

AS BUILT INFORMATION
CONTRACTOR: CCM
WORK STAKED BY: JMA
INSPECTOR'S ACCEPTANCE BY: DONALD LEASE
FIELD VERIFICATION BY: J.G.
DRAWINGS CORRECTED BY: JMA
DATE: 10/04 | 12/04 | 1/05
MICRO-FILM INFORMATION
RECORDED BY
DATE
NO.

ENGINEER'S SEAL
STEVEN R. MEANS
NEW MEXICO
13676
REGISTERED PROFESSIONAL ENGINEER
04/21/2004

NO.	BY	DATE	REMARKS
			Revisions
			DESIGN
			Designed By G.M. Date 02-2004
			Drawn By S.G.H. Date 02-2004
			Checked By G.M. Date 04-2004

SURVEY INFORMATION
FIELD NOTES

NO.	BY	DATE
20502	JMA	03/03

PROJECT BENCHMARK- ACS STATION "HEAVEN" (TIED TO PASEO DEL NORTE ROAD- WAY CONSTRUCTION IN 1999) PREVIOUS ELEVATION = 5378.79 FEET (NGVD 1929). THIS BENCHMARK HAS BEEN USED TO PROVIDE UNIFORMITY BETWEEN THIS SURVEY AND THE PREVIOUS SURVEYS CONDUCTED FOR RELATED NORTH DOMINGO BACA ARROYO PROJECTS. THE ELEVATION FOR ACS STATION "S-C20", AN ACS 1 3/4" ALUMINUM DISK STAMPED "ACS BM, S-C20", EPOXIED TO THE TOP OF THE CONCRETE DROP INLET, AT THE NNE CURB RETURN IN THE NORTHEAST QUADRANT OF THE INTER- SECTION OF VENTURA STREET AND ANAHEIM AVENUE N.E., BASED UPON THIS DATUM IS 5552.84 FEET (NGVD 1929). THE C.O.A. PUBLISHED ELEV. IS 5552.71' (NGVD 1929)

BENCH MARKS

File Path: G:\MWORK\M\2002\050A\
File Name: 20504PS.DWG
Plot Date: 04-20-2004
Plot Time: 3:48 pm

SCANNED BY MICROFILM

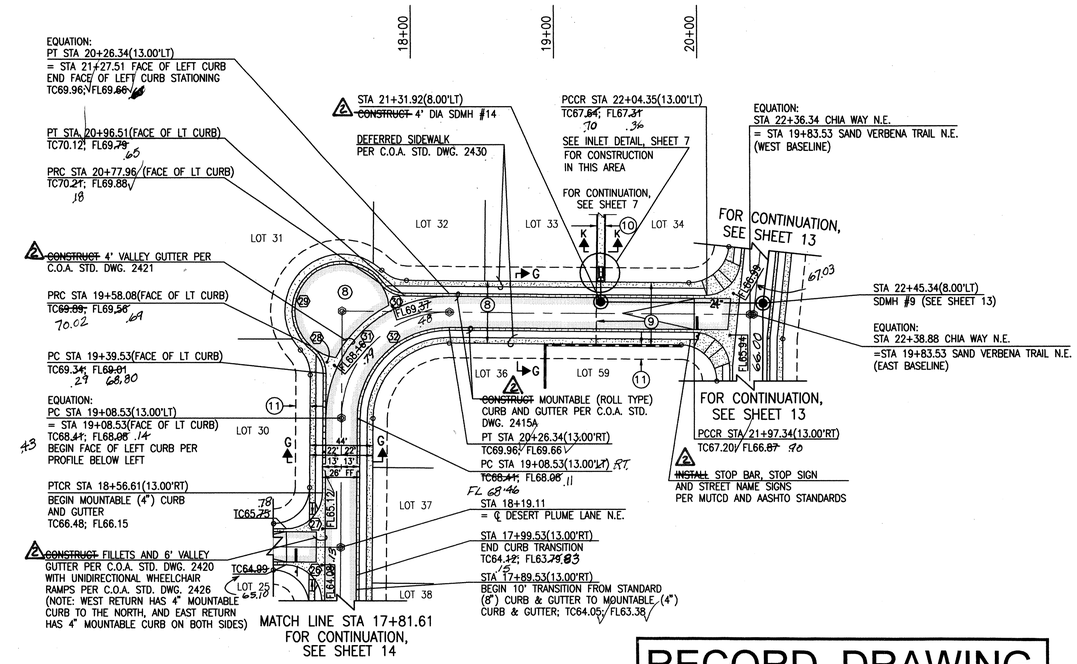

(26)	TC	FL
1	64.78*	64.45
2	—	64.25
3	64.32	63.85

*4" MOUNTABLE CURB

(27)	TC	FL
1	66.11*	65.78
2	33.33	65.42
3	65.75*	65.42

*4" MOUNTABLE CURB

RECORD DRAWING

SEE SHEET 1 FOR CERTIFICATION

LEGEND

- NEW PERMANENT ASPHALT PAVEMENT
- NEW TEMPORARY ASPHALT PAVEMENT
- NEW CONCRETE
- NEW MOUNTABLE (4") CURB AND GUTTER
- NEW STANDARD (8") CURB AND GUTTER

SEE SHEETS 2–4 FOR KEYED PLATTING NOTES

SCALE:
HORIZONTAL: 1" = 50'
VERTICAL: 1" = 10'

DATURA TRAIL N.E. / CHIA WAY N.E. (PRIVATE)

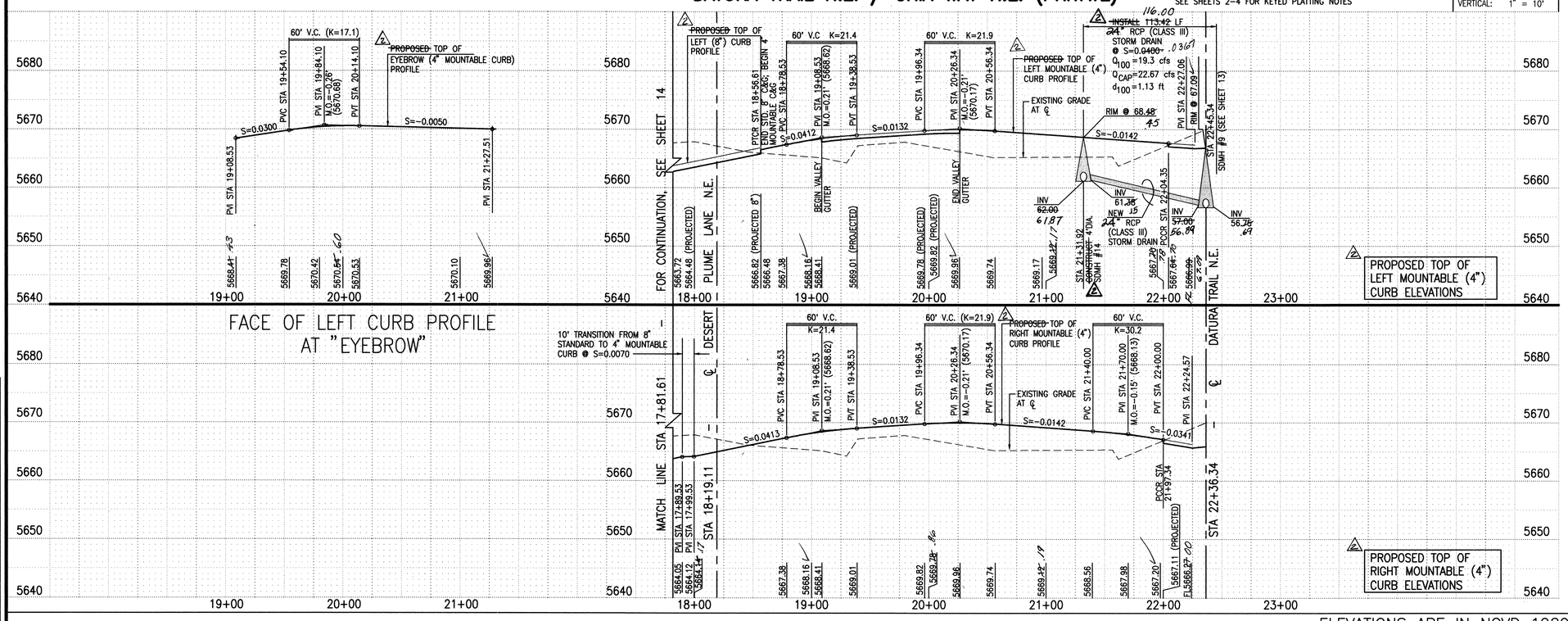

ELEVATIONS ARE IN NGVD 1929

STREET PAVING IMPROVEMENTS:

1. ALL SLOPES AS SHOWN ON PROFILES ARE BASED ON STREET CENTERLINE STATIONING EXCEPT CUL-DE-SACS AND EYEBROWS WHERE STATIONING IS ALONG FACE-OF-CURB.
2. WHERE REMOVAL OF EXISTING CURB AND GUTTER, SIDEWALK OR PAVEMENT IS REQUIRED, THE CONTRACTOR SHALL SAWCUT AND/OR REMOVE TO THE NEAREST JOINT. CURB AND GUTTER AND SIDEWALK SHOWN AS EXISTING AND NOT TO BE REMOVED UNDER THIS CONTRACT WHICH IS DAMAGED OR DISPLACED BY THE CONTRACTOR SHALL BE REMOVED AND REPLACED BY THE CONTRACTOR PER C.O.A. STD. DWGS 2415A AND 2430, RESPECTIVELY, AT THE CONTRACTOR'S EXPENSE.
3. ALL DIMENSIONS OF CURB AND CURB RETURNS ARE SHOWN TO FACE-OF-CURB.
4. SIDEWALKS SHOWN HEREON AS "DEFERRED" SHALL BE CONSTRUCTED UNDER SEPARATE PERMIT.
5. ALL WHEELCHAIR RAMPS MUST BE CONSTRUCTED UNDER THIS WORK ORDER.
6. ALL CURB AND GUTTER SHOWN HEREON SHALL BE CONSTRUCTED IN ACCORDANCE WITH CITY OF ALBUQUERQUE STANDARD DRAWING 2415A UNLESS OTHERWISE NOTED.
7. UPON COMPLETION OF CONSTRUCTION, THE DEVELOPER WILL PROVIDE AND INSTALL ALL PRIVATE STREET SIGNS.
8. STRIPING BY CONTRACTOR WILL BE REQUIRED PRIOR TO FINAL ACCEPTANCE.

STORM DRAIN NOTES:

1. ALL STORM DRAIN TO BE CLASS III REINFORCED CONCRETE PIPE (RCP) UNLESS OTHERWISE NOTED.
2. ALL MANHOLES SHALL BE 6' DIAMETER TYPE 'C' PER C.O.A. STANDARD DRAWING 2101 UNLESS OTHERWISE NOTED.
3. ALL STATIONING SHOWN HEREON IS BASED ON STREET CENTERLINE UNLESS OTHERWISE NOTED. SLOPES ARE BASED ON TRUE LENGTH OF PIPE.
4. THE CONTRACTOR SHALL BE RESPONSIBLE FOR SELECTING APPROPRIATE MEANS AND METHODS TO EXCAVATE AND TRENCH AND INSTALL PIPE SO AS TO NOT EXCEED RIGHT-OF-WAY OR EASEMENT LIMITS, AND SO AS NOT TO INTERFERE WITH OTHER UTILITIES. THIS SHALL BE CONSIDERED INCIDENTAL TO TRENCHING, THEREFORE, NO SEPARATE PAYMENT WILL BE MADE.
5. THE CONTRACTOR SHALL BE RESPONSIBLE FOR PROTECTING, SUPPORTING AND REPLACING, IF DAMAGED, ALL OTHER UTILITIES ENCOUNTERED DURING CONSTRUCTION. THIS SHALL BE CONSIDERED INCIDENTAL TO TRENCHING, THEREFORE, NO SEPARATE PAYMENT WILL BE MADE.
6. FOR STORM DRAIN CONSTRUCTION, RCP PIPE JOINTS SHALL NOT BE GROUTED PRIOR TO FINAL INSPECTION. FINAL INSPECTION WILL DETERMINE JOINTS TO BE GROUTED FOR FINAL ACCEPTANCE OF THE CONSTRUCTION.

CURVE TABLE

CURVE	RADIUS	LENGTH	DELTA
(26)	25.00'	39.27'	90°00'00"
(27)	25.00'	39.27'	90°00'00"
(28)	20.00'	18.55'	53°07'48"
(29)	35.00'	119.89'	196°15'37"
(30)	20.00'	18.55'	53°07'48"
(31)	88.00'	138.23'	90°00'00"
(32)	62.00'	87.68'	90°00'00"

AS BUILT INFORMATION
CONTRACTOR — DATE 2-20-04
WORK STAKED BY — DATE 10/04
INSPECTOR'S CHANGES BY — DATE 12/04
FIELD VERIFICATION BY — DATE 1/05
DRAWINGS CORRECTED BY — DATE
MICRO-FILM INFORMATION
RECORDED BY — DATE
NO. — DATE

BENCH MARKS

PROJECT BENCHMARK – ACS STATION "HEAVEN" (TIED TO PASEO DEL NORTE ROAD-WAY CONSTRUCTION IN 1999) PREVIOUS ELEVATION = 5378.79 FEET (NGVD 1929). THIS BENCHMARK HAS BEEN USED TO PROVIDE UNIFORMITY BETWEEN THIS SURVEY AND THE PREVIOUS SURVEYS CONDUCTED FOR RELATED NORTH DOMINGO BACA ARROYO PROJECTS. THE ELEVATION FOR ACS STATION "5-C20", AN ACS 1 3/4 ALUMINUM DISK STAMPED "ACS BM, 5-C20", EPOXIED TO THE TOP OF THE CONCRETE DROP INLET, AT THE NNE CURB RETURN IN THE NORTHEAST QUADRANT OF THE INTERSECTION OF VENTURA STREET AND ANAHEIM AVENUE N.E., BASED UPON THIS DATUM IS 5552.84 FEET (NGVD 1929). THE C.O.A. PUBLISHED ELEV. IS 5552.71' (NGVD 1929)

SURVEY INFORMATION

NO.	BY	DATE
20502	JMA	03/03

FIELD NOTES

ENGINEER'S SEAL
GRAEME MEANS
NEW MEXICO (3679) REGISTERED PROFESSIONAL ENGINEER
04/21/2004

RECORD DRAWING

NO.	DATE	REMARKS	BY
		Revisions	

Designed By	G.M.	Date	02-2004
Drawn By	S.G.H.	Date	02-2004
Checked By	G.M.	Date	04-2004

2002.050.38

CITY OF ALBUQUERQUE
PUBLIC WORKS DEPARTMENT
ENGINEERING DEVELOPMENT GROUP

TITLE: OCOTILLO SUBDIVISION
PAVING AND STORM DRAINAGE IMPROVEMENTS PLAN AND PROFILE
DATURA TRAIL N.E / CHIA WAY N.E.

Design Review Committee — APPROVED APR 27 2004
City Engineer Approval — APPROVED APR 2004
Last Design Update — Mo./Day/Yr.

City Project No.	Zone Map No.	Sheet	Of
729181	C-21	15	25

File Path: L:\MAKAHA\2002\BA\
File Name: 20504P6.DWG
Plot Date: 04-20-2004
Plot Time: 3:51 pm

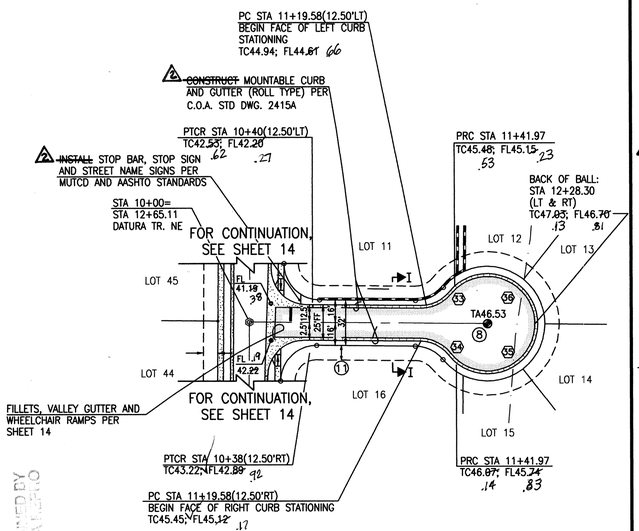

NOTE: SIDEWALKS WAIVED AT DRB

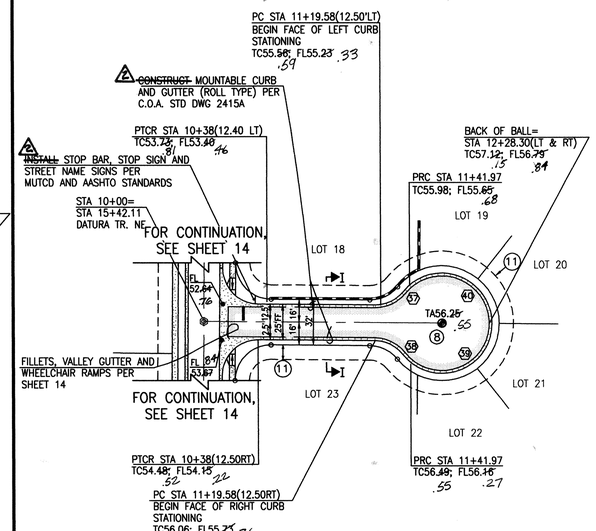

NOTE: SIDEWALKS WAIVED AT DRB

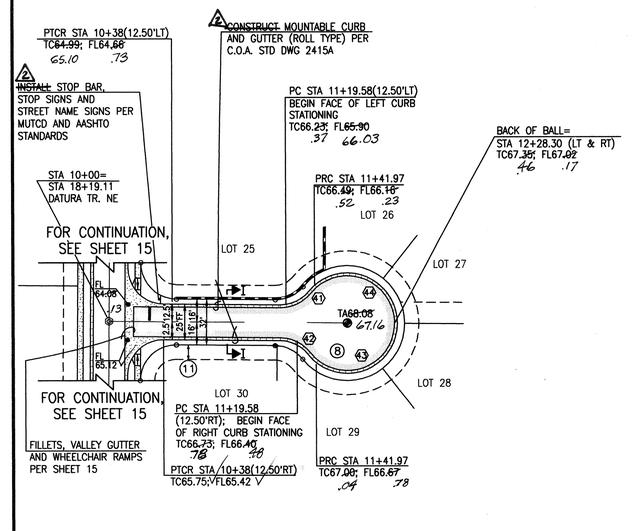

NOTE: SIDEWALKS WAIVED AT DRB

RECORD DRAWING

SEE SHEET 1 FOR CERTIFICATION

SCALE:
HORIZONTAL: 1" = 50'
VERTICAL: 1" = 10'

DESERT ASTER LANE N.E. (PRIVATE)

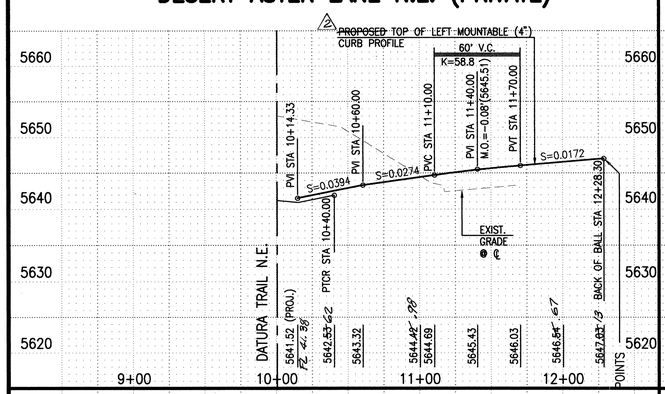

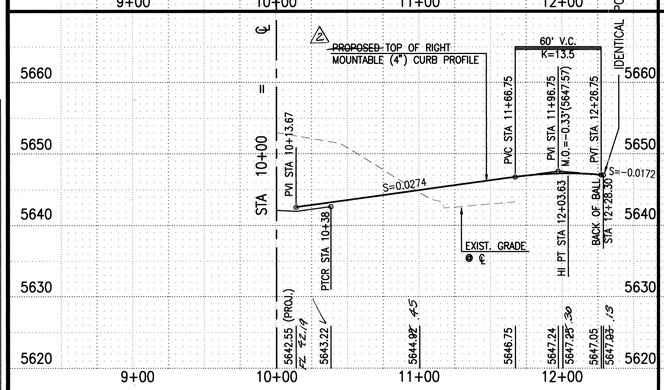

DESERT POPPY LANE N.E. (PRIVATE)

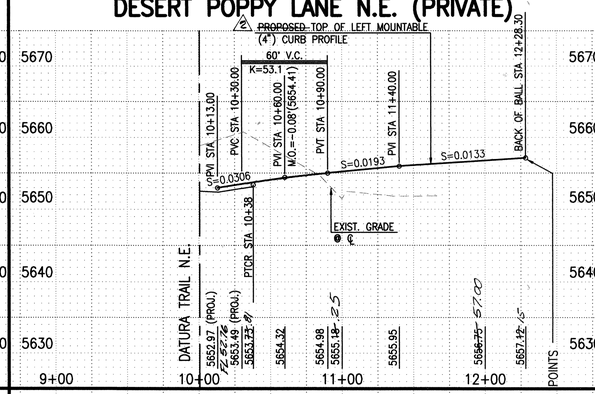

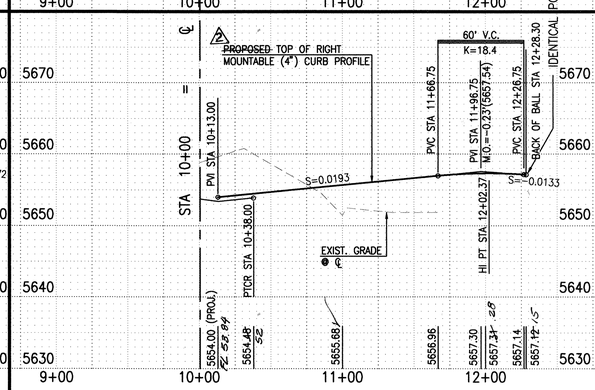

DESERT PLUME LANE N.E. (PRIVATE)

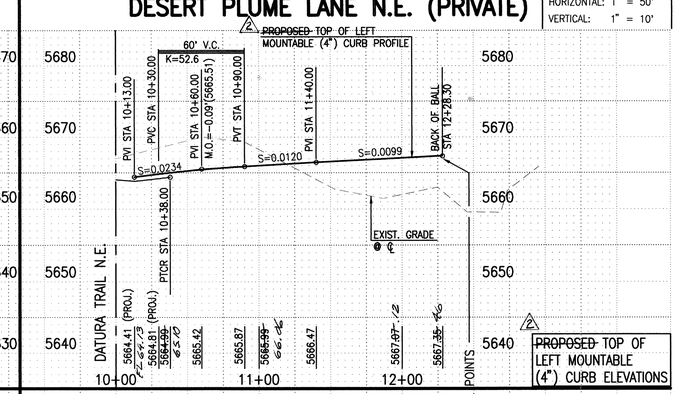

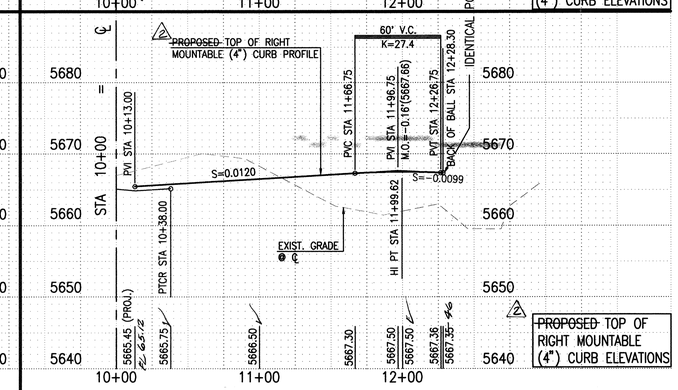

ELEVATIONS ARE IN NGVD 1929

STREET PAVING IMPROVEMENTS:

1. ALL SLOPES AS SHOWN ON PROFILES ARE BASED ON STREET CENTERLINE STATIONING EXCEPT CUL-DE-SACS AND EYEBROWS WHERE STATIONING IS ALONG FACE-OF-CURB.
2. WHERE REMOVAL OF EXISTING CURB AND GUTTER, SIDEWALK OR PAVEMENT IS REQUIRED, THE CONTRACTOR SHALL SAWCUT AND/OR REMOVE TO THE NEAREST JOINT. CURB AND GUTTER AND SIDEWALK SHOWN AS EXISTING AND NOT TO BE REMOVED UNDER THIS CONTRACT WHICH IS DAMAGED OR DISPLACED BY THE CONTRACTOR SHALL BE REMOVED AND REPLACED BY THE CONTRACTOR PER C.O.A. STD. DWGS 2415A AND 2430, RESPECTIVELY, AT THE CONTRACTOR'S EXPENSE.
3. ALL DIMENSIONS OF CURB AND CURB RETURNS ARE SHOWN TO FACE-OF-CURB.
4. SIDEWALKS SHOWN HEREON AS "DEFERRED" SHALL BE CONSTRUCTED UNDER SEPARATE PERMIT.
5. ALL WHEELCHAIR RAMPS MUST BE CONSTRUCTED UNDER THIS WORK ORDER.
6. ALL CURB AND GUTTER SHOWN HEREON SHALL BE CONSTRUCTED IN ACCORDANCE WITH CITY OF ALBUQUERQUE STANDARD DRAWING 2415A UNLESS OTHERWISE NOTED.
7. UPON COMPLETION OF CONSTRUCTION, THE CITY OF ALBUQUERQUE WILL PROVIDE AND INSTALL ALL STREET SIGNS.
8. STRIPING BY CONTRACTOR WILL BE REQUIRED PRIOR TO FINAL ACCEPTANCE.

STORM DRAIN NOTES:

1. ALL STORM DRAIN TO BE CLASS III REINFORCED CONCRETE PIPE (RCP) UNLESS OTHERWISE NOTED.
2. ALL MANHOLES SHALL BE 6' DIAMETER TYPE 'C' PER C.O.A. STANDARD DRAWING 2101 UNLESS OTHERWISE NOTED.
3. ALL STATIONING SHOWN HEREON IS BASED ON STREET CENTERLINE UNLESS OTHERWISE NOTED. SLOPES ARE BASED ON TRUE LENGTH OF PIPE.
4. THE CONTRACTOR SHALL BE RESPONSIBLE FOR SELECTING APPROPRIATE MEANS AND METHODS TO EXCAVATE AND TRENCH AND INSTALL PIPE SO AS TO NOT EXCEED RIGHT-OF-WAY OR EASEMENT LIMITS, AND SO AS NOT TO INTERFERE WITH OTHER UTILITIES. THIS SHALL BE CONSIDERED INCIDENTAL TO TRENCHING, THEREFORE, NO SEPARATE PAYMENT WILL BE MADE.
5. THE CONTRACTOR SHALL BE RESPONSIBLE FOR PROTECTING, SUPPORTING AND REPLACING, IF DAMAGED, ALL OTHER UTILITIES ENCOUNTERED DURING CONSTRUCTION. THIS SHALL BE CONSIDERED INCIDENTAL TO TRENCHING, THEREFORE, NO SEPARATE PAYMENT WILL BE MADE.
6. FOR STORM DRAIN CONSTRUCTION, RCP PIPE JOINTS SHALL NOT BE GROUTED PRIOR TO FINAL INSPECTION. FINAL INSPECTION WILL DETERMINE JOINTS TO BE GROUTED FOR FINAL ACCEPTANCE OF THE CONSTRUCTION.

LEGEND

- NEW PERMANENT ASPHALT PAVEMENT
- NEW TEMPORARY ASPHALT PAVEMENT
- NEW CONCRETE
- NEW MOUNTABLE CURB AND GUTTER
- NEW STANDARD CURB AND GUTTER

CURVE TABLE

CURVE	RADIUS	LENGTH	DELTA
33	25.00'	22.39'	51°19'04"
34	25.00'	22.39'	51°19'04"
35	35.00'	86.33'	141°19'04"
36	35.00'	86.33'	141°19'04"
37	25.00'	22.39'	51°19'04"
38	25.00'	22.39'	51°19'04"
39	35.00'	86.33'	141°19'04"
40	35.00'	86.33'	141°19'04"
41	25.00'	22.39'	51°19'04"
42	25.00'	22.39'	51°19'04"
43	35.00'	86.33'	141°19'04"
44	35.00'	86.33'	141°19'04"

JMA
JEFF MORTENSEN & ASSOCIATES, INC.
6010-B MIDWAY PARK BLVD. N.E.
ALBUQUERQUE NEW MEXICO 87109
ENGINEERS SURVEYORS (505) 345-4250
FAX: 505 345-4254 ESTABLISHED 1977

2002.050.4.8

CITY OF ALBUQUERQUE
PUBLIC WORKS DEPARTMENT
ENGINEERING DEVELOPMENT GROUP

TITLE:
OCOTILLO SUBDIVISION
PAVING AND STORM DRAINAGE IMPROVEMENTS PLAN AND PROFILE
DESERT ASTER LN. N.E., DESERT POPPY LN. N.E., DESERT PLUME LN. N.E.

Design Review Committee | City Engineer Approval | Mo./Day/Yr. | Mo./Day/Yr.

City Project No. 729181 | Zone Map No. C-21 | Sheet 16 Of 25

AS BUILT INFORMATION
CONTRACTOR CCM DATE 04-05-04
WORK STAKED BY JMA DATE 10/04
ACCEPTANCE INSPECTION BY DATE 12/04
FIELD VERIFICATION BY J.G. DATE 12/04
DRAWINGS CORRECTED BY JMA DATE 4/05
MICRO-FILM INFORMATION
RECORDED BY
DATE
NO.

BENCH MARKS
PROJECT BENCHMARK- ACS STATION "HEAVEN" (TIED TO PASEO DEL NORTE ROADWAY CONSTRUCTION IN 1999) PREVIOUS ELEVATION = 5378.79 FEET (NGVD 1929). THIS BENCHMARK HAS BEEN USED TO PROVIDE UNIFORMITY BETWEEN THIS SURVEY AND THE PREVIOUS SURVEYS CONDUCTED FOR RELATED NORTH DOMINGO BACA ARROYO PROJECTS. THE ELEVATION FOR ACS STATION "5-C20", AN ACS 1 3/4" ALUMINUM DISK STAMPED "ACS BM, 5-C20", EPOXIED TO THE TOP OF THE CONCRETE DROP INLET, AT THE NNE CURB RETURN IN THE NORTHEAST QUADRANT OF THE INTERSECTION OF VENTURA STREET AND ANAHEIM AVENUE N.E., BASED UPON THIS DATUM IS 5352.84 FEET (NGVD 1929). THE C.O.A. PUBLISHED ELEV. IS 5352.71 (NGVD 1929)

SURVEY INFORMATION
FIELD NOTES

NO.	BY	DATE
20502	JMA	03/03

ENGINEER'S SEAL
STATE OF NEW MEXICO
JAMES R. MENNS
13678
PROFESSIONAL ENGINEER
04/21/2004

RECORD DRAWING

NO.	DATE	REMARKS	BY
1	10/04	Revisions	JMA

Designed By	G.M.	Date 03-2004
Drawn By	S.G.H.	Date 03-2004
Checked By	G.M.	Date 04-2004

File Path: E:\MMWORK\MENNS\
File Name: 20504PB.DWG
Plot Date: 04-20-2004
Plot Time: 4:06 pm

SCANNED BY MICROFILMING

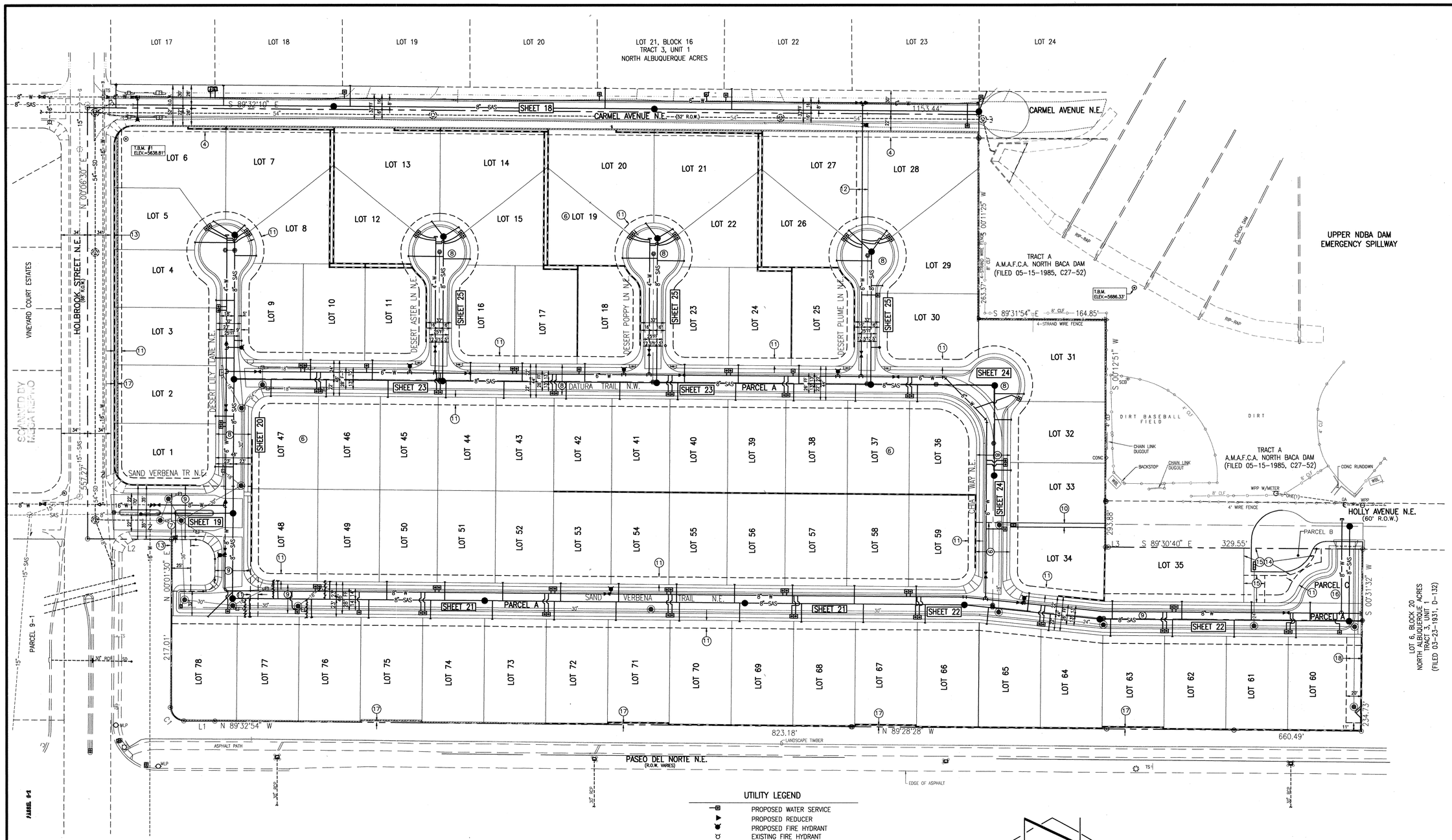

KEYED NOTES

(SEE PLAT, SHEETS 2–4 FOR MORE INFORMATION REGARDING BOUNDARY AND EASEMENTS)

4. SOUTH 8' OF CARMEL AVENUE N.E. VACATED BY 03DRB-01355
8. PRIVATE ACCESS, PRIVATE STORM DRAINAGE EASEMENTS SERVING LOTS 1–78 AND PARCELS B AND C, AND CITY OF ALBUQUERQUE PUBLIC WATER AND PUBLIC SANITARY SEWER EASEMENTS. MAINTENANCE OF THE PRIVATE EASEMENTS SHALL BE THE RESPONSIBILITY OF THE OCOTILLO SUBDIVISION HOMEOWNERS ASSOCIATION.
9. PRIVATE ACCESS EASEMENT SERVING LOTS 1–78 AND PARCELS B AND C, AND CITY OF ALBUQUERQUE PUBLIC STORM DRAINAGE, PUBLIC WATER AND PUBLIC SANITARY SEWER EASEMENTS. MAINTENANCE OF THE PRIVATE EASEMENTS SHALL BE THE RESPONSIBILITY OF THE OCOTILLO SUBDIVISION HOMEOWNERS ASSOCIATION.
10. CITY OF ALBUQUERQUE PUBLIC STORM DRAINAGE EASEMENT WITHIN PARCEL A.
11. 10' PUBLIC UTILITY EASEMENT.
12. 15' CITY OF ALBUQUERQUE PUBLIC WATER LINE EASEMENT.
13. 25' CITY OF ALBUQUERQUE PUBLIC STORM DRAINAGE EASEMENT.
14. TEMPORARY PUBLIC VEHICULAR EASEMENT GRANTED UNTIL SUCH TIME THAT HOLLY AVENUE N.E. IS VACATED AND/OR RELOCATED TO THE EAST OF PROPOSED OCOTILLO SUBDIVISION VIA THE STANDARD VACATION AND PLATTING PROCESS OF THE DEVELOPMENT REVIEW BOARD OF THE CITY OF ALBUQUERQUE.
15. TEMPORARY PUBLIC DRAINAGE EASEMENT GRANTED TO CONVEY PUBLIC RUNOFF TO THE PUBLIC STORM DRAINAGE SYSTEM WITHIN PARCEL A UNTIL SUCH TIME THAT HOLLY AVENUE NE IS VACATED AND/OR RELOCATED TO THE EAST OF PROPOSED OCOTILLO SUBDIVISION VIA THE STANDARD VACATION AND PLATTING PROCESS OF THE DEVELOPMENT REVIEW BOARD OF THE CITY OF ALBUQUERQUE.
16. PARCEL C IS GRANTED AS A PRIVATE ACCESS EASEMENT SERVING LOTS 1–78 AND PARCELS B AND C, AND A CITY OF ALBUQUERQUE PUBLIC WATER AND PUBLIC SANITARY SEWER EASEMENT. FUTURE VACATION OF HOLLY AVENUE N.E., ADJACENT TO PROPOSED PARCELS B AND C SHALL ALSO REQUIRE VACATION AND/OR REALIGNMENT OF THESE EASEMENTS TO A LOCATION EAST OF OCOTILLO SUBDIVISION. MAINTENANCE OF THE PRIVATE ACCESS EASEMENT SHALL BE THE RESPONSIBILITY OF THE SUBDIVISION HOMEOWNERS ASSOCIATION.
17. PRIVATE LANDSCAPING EASEMENT GRANTED TO SERVE THE OCOTILLO SUBDIVISION HOMEOWNERS ASSOCIATION. MAINTENANCE OF THE PRIVATE EASEMENT SHALL BE THE RESPONSIBILITY OF THE OCOTILLO SUBDIVISION HOMEOWNERS ASSOCIATION.
18. 20' TEMPORARY PUBLIC STORM DRAINAGE EASEMENT TO ACCEPT AND CONVEY EXISTING OFFSITE FLOWS FORM LOT 6, BLOCK 20, NORTH ALBUQUERQUE ACRES, TRACT 3, UNIT 1 TO PARCEL A UNTIL SUCH TIME THAT DEVELOPMENT ON SAID LOT 6 INTERCEPTS SAID HISTORIC FLOWS. MAINTENANCE OF THE TEMPORARY EASEMENT SHALL BE THE RESPONSIBILITY OF THE OCOTILLO SUBDIVISION HOMEOWNERS ASSOCIATION.

UTILITY LEGEND

- PROPOSED WATER SERVICE
- PROPOSED REDUCER
- PROPOSED FIRE HYDRANT
- EXISTING FIRE HYDRANT
- EXIST GATE VALVE
- PROPOSED GATE VALVE
- PROPOSED BUTTERFLY VALVE
- PROPOSED SAS MANHOLE
- EXIST SAS MANHOLE
- PROPOSED STREET LIGHT (NIC)
- PROPOSED STORM DRAIN MANHOLE

BOUNDARY TABLES

LINE	DIRECTION	DISTANCE
L1	N 89°55'27" W	38.65'
L2	N 89°32'10" W	108.39'
L3	S 89°32'10" E	3.32'

CURVE	RADIUS	LENGTH	CHORD BEARING	CHORD	DELTA
C1	17.50'	27.70'	N 44°33'55" W	24.90'	90°41'57"

SCALE: 1" = 60'

60 0 120
30 60

SITE PLAN NOTES

1. SEE SHEETS 2–4 FOR SUBDIVISION PLAT.
2. SEE SHEET 5 FOR APPROVED GRADING PLAN
3. THIS IS NOT A BOUNDARY SURVEY. APPARENT PROPERTY CORNERS ARE SHOWN HEREON FOR ORIENTATION PURPOSES ONLY. BOUNDARY DATA SHOWN IS FROM SUBDIVISION PLAT PREPARED BY THIS OFFICE (SEE SHEETS 2–4)

RECORD DRAWING

SEE SHEET 1 FOR CERTIFICATION

AS BUILT INFORMATION

CONTRACTOR	C.M.	DATE 10-24-04
WORK STAKED BY	JMA	DATE 10/04
INSPECTOR'S ACCEPTANCE BY	J.G.	DATE 12/04
FIELD VERIFICATION BY	JMA	DATE 1/05
DRAWINGS CORRECTED BY	MICRO-FILM	DATE

RECORDED BY
DATE
NO.

ENGINEER'S SEAL

NEW MEXICO REGISTERED PROFESSIONAL ENGINEER (367) GRAME MEANS

NO.	DATE	REMARKS	BY
A	10/04	RECORD DRAWING	JMA

Revisions
DESIGN

Designed By	G.M.	Date 03-04
Drawn By	S.G.H.	Date 03-04
Checked By	G.M.	Date 04-04

SURVEY INFORMATION

FIELD NOTES

NO.	BY	DATE
20502	JMA	03/03

BENCH MARKS

PROJECT BENCHMARK– ACS STATION "HEAVEN" (TIED TO PASEO DEL NORTE ROAD WAY CONSTRUCTION IN 1999) PREVIOUS ELEVATION = 5378.79 FEET (NGVD 1929). THIS BENCHMARK HAS BEEN USED TO PROVIDE UNIFORMITY BETWEEN THIS SURVEY AND THE PREVIOUS SURVEYS CONDUCTED FOR RELATED NORTH DOMINGO BACA ARROYO PROJECTS. THE ELEVATION FOR ACS STATION "5-C20", AN ACS 1 3/4" ALUMINUM DISK STAMPED "ACS BM, 5-C20", EXPOSED TO THE TOP OF THE CONCRETE DROP INLET, AT THE NNE CURB RETURN IN THE NORTHEAST QUADRANT OF THE INTERSECTION OF VENTURA STREET AND ANAHEM AVENUE N.E., BASED UPON THIS DATUM IS 5352.84 FEET (NGVD 1929). THE C.O.A. PUBLISHED ELEV. IS 5352.71' (NGVD 1929)

JEFF MORTENSEN & ASSOCIATES, INC.
6010-B MIDWAY PARK BLVD. N.E.
ALBUQUERQUE NEW MEXICO 87109
ENGINEERS SURVEYORS (505) 345-4250
FAX: 505 345-4254 Email: jmainc@swcp.com

2002.050.A 8

CITY OF ALBUQUERQUE
PUBLIC WORKS DEPARTMENT
ENGINEERING DEVELOPMENT GROUP

TITLE: OCOTILLO SUBDIVISION
WATER AND SANITARY SEWER SITE PLAN;
WATER VALVE SHUTOFF PLAN

Design Review Committee: APPROVED MAY 27 2004
City Engineer Approval: 4 2004 CITY ENGINEER
Last Design Update | Mo./Day/Yr. | Mo./Day/Yr.

City Project No. 729181 | Zone Map No. C-21 | Sheet 17 Of 25

File Path: E:\MYA\MOH\A\20020\A
File Name: 20504USP.DWG
Plot Date: 04-20-2004
Plot Time: 4:12 pm

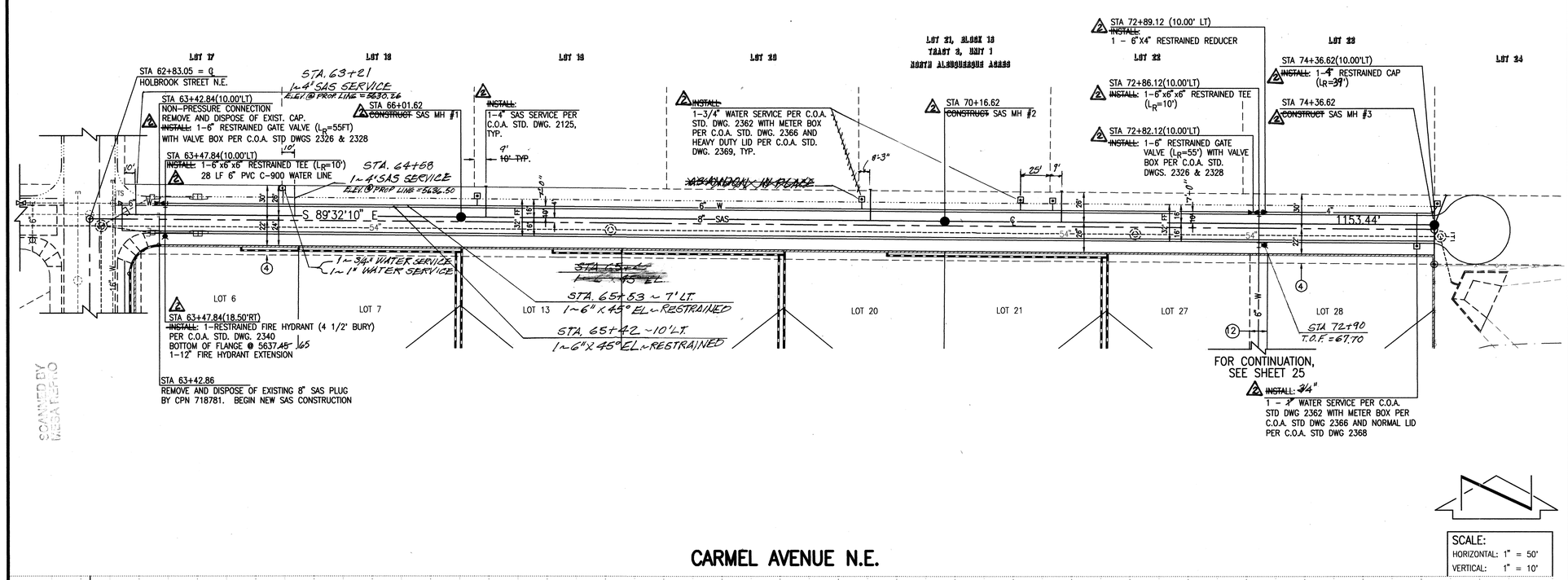

CARMEL AVENUE N.E.

SCALE:
HORIZONTAL: 1" = 50'
VERTICAL: 1" = 10'

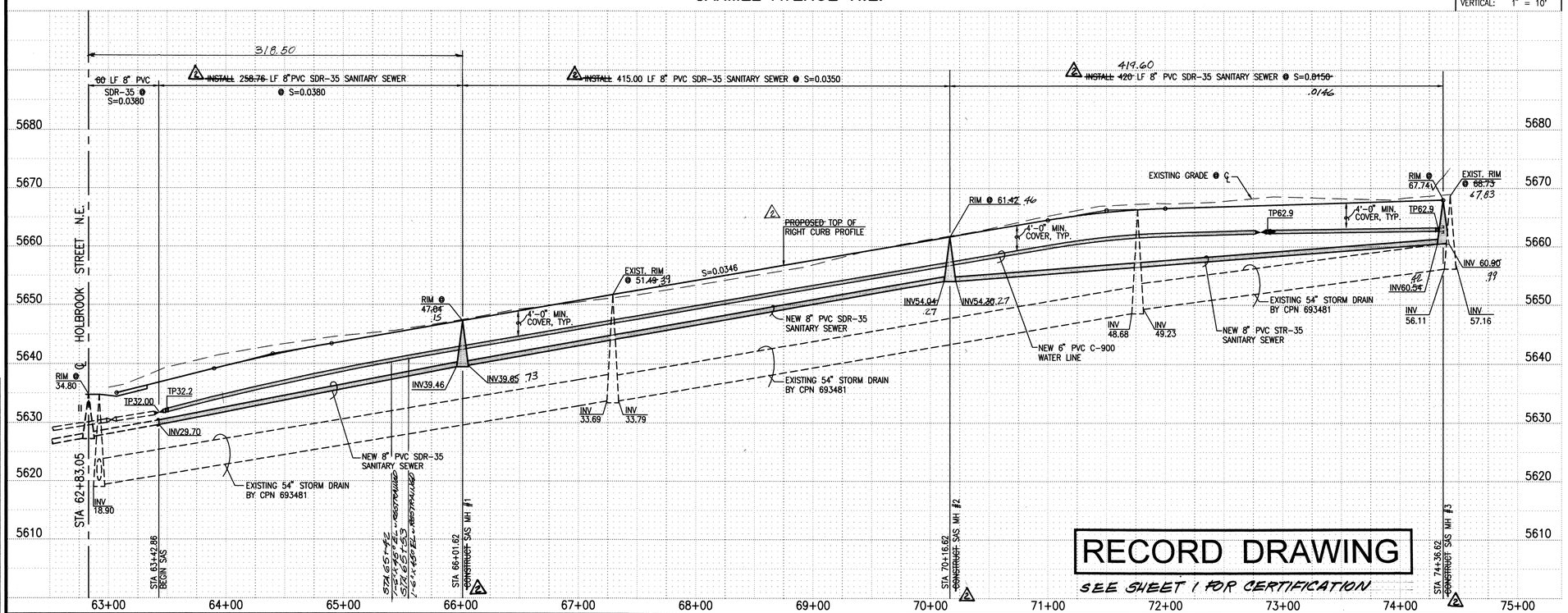

RECORD DRAWING

SEE SHEET 1 FOR CERTIFICATION

ELEVATIONS ARE IN NGVD 1929

WATER LINE CONSTRUCTION NOTES:

1. ALL STATIONING IS BASED ON STREET CENTERLINE UNLESS INDICATED OTHERWISE.
2. FOR ALL LINES 12" AND SMALLER, WATER MAIN SHALL BE PVC C-900 PIPE OR AS APPROVED BY THE CITY OF ALBUQUERQUE CITY ENGINEER. DUCTILE IRON IS AN ACCEPTABLE PIPE MATERIAL IN LIEU OF PVC.
3. FOR ALL LINES 14" AND LARGER, WATER MAIN SHALL BE DUCTILE IRON OR PVC C-905 OR AS APPROVED BY THE CITY OF ALBUQUERQUE CITY ENGINEER. CONCRETE CYLINDER IS AN ACCEPTABLE PIPE MATERIAL IN LIEU OF DUCTILE IRON.
4. WATER LINE SHALL HAVE A MINIMUM COVER OF 3'-0" (FINISHED GRADE TO TOP OF PIPE). EXTRA DEPTH TRENCHING, IF REQUIRED, SHALL BE CONSIDERED INCIDENTAL TO CONSTRUCTION, THEREFORE, NO SEPARATE PAYMENT WILL BE MADE.
5. ELECTRONIC MARKER DISCS (EMD) SHALL BE INSTALLED IN ACCORDANCE WITH THE STANDARD SPECIFICATION.
6. IN ACCORDANCE WITH SECTION 801 OF THE "STANDARD SPECIFICATIONS", METALIZED DETECTABLE WARNING TAPE SHALL BE INSTALLED 18" ABOVE ALL PVC PIPE INSTALLED ON THIS PROJECT.
7. VALVE STEM AND FIRE HYDRANT EXTENSIONS SHALL BE PROVIDED IN ACCORDANCE WITH THE STANDARD SPECIFICATIONS. THE COST OF EACH EXTENSION SHALL BE CONSIDERED INCIDENTAL TO CONSTRUCTION THEREFORE NO SEPARATE PAYMENT WILL BE MADE.
8. JOINT RESTRAINT SHALL BE PROVIDED ON ALL JOINTS OF FIRE HYDRANT LEGS FROM TEE TO FIRE HYDRANT INCLUDING THE TEE AND FIRE HYDRANT.
9. FOR THE PURPOSES OF THIS PROJECT, ALL RESTRAINED JOINTS AND JOINT RESTRAINT SHALL BE MECHANICALLY RESTRAINED. JOINT RESTRAINT LENGTHS SPECIFIED HEREON ARE THE LENGTHS TO BE RESTRAINED EACH SIDE OF THE FITTING.
10. THE CONTRACTOR SHALL BE RESPONSIBLE FOR SELECTING APPROPRIATE MEANS AND METHODS TO EXCAVATE AND TRENCH AND INSTALL PIPE SO AS TO NOT EXCEED RIGHT-OF-WAY OR EASEMENT LIMITS, AND SO AS NOT TO INTERFERE WITH OTHER UTILITIES. THIS SHALL BE CONSIDERED INCIDENTAL TO TRENCHING, THEREFORE, NO SEPARATE PAYMENT WILL BE MADE.
11. THE CONTRACTOR SHALL BE RESPONSIBLE FOR PROTECTING, SUPPORTING AND REPLACING, IF DAMAGED, ALL OTHER UTILITIES ENCOUNTERED DURING CONSTRUCTION. THIS SHALL BE CONSIDERED INCIDENTAL TO TRENCHING, THEREFORE, NO SEPARATE PAYMENT WILL BE MADE.
12. WHERE WATER AND SANITARY SEWER LINES CROSS, THE SANITARY SEWER LINE SHALL BE INSTALLED AS PRESSURE PIPE BETWEEN MANHOLES IF 18 INCHES OF VERTICAL SEPARATION DOES NOT EXIST.
13. ALL FIRE HYDRANTS SHALL BE SECURELY WRAPPED IN BLACK PLASTIC UNTIL SUCH TIME AS THE NEW WATER LINE IS PUT INTO SERVICE BY WATER SYSTEM DIVISION PERSONNEL.

SANITARY SEWER CONSTRUCTION NOTES:

1. ALL STATIONING IS BASED ON STREET CENTERLINE UNLESS INDICATED OTHERWISE.
2. ALL SEWER PIPE SHALL BE PVC (SDR-35).
3. SLOPES SHOWN ON THE PROFILES ARE BASED ON TRUE DISTANCES.
4. SEWER SERVICE LATERALS SHALL BE PROVIDED WITH ELECTRONIC MARKER DISCS (EMD) AS PER CITY OF ALBUQUERQUE STANDARD DRAWING 2125. EMD SHALL BE PROVIDED IN ACCORDANCE WITH THE STANDARD SPECIFICATION.
5. THE CONTRACTOR SHALL BE RESPONSIBLE FOR SELECTING APPROPRIATE MEANS AND METHODS TO EXCAVATE AND TRENCH AND INSTALL PIPE SO AS TO NOT EXCEED RIGHT-OF-WAY OR EASEMENT LIMITS, AND SO AS NOT TO INTERFERE WITH OTHER UTILITIES. THIS SHALL BE CONSIDERED INCIDENTAL TO TRENCHING, THEREFORE, NO SEPARATE PAYMENT WILL BE MADE.
6. THE CONTRACTOR SHALL BE RESPONSIBLE FOR PROTECTING, SUPPORTING AND REPLACING, IF DAMAGED, ALL OTHER UTILITIES ENCOUNTERED DURING CONSTRUCTION. THIS SHALL BE CONSIDERED INCIDENTAL TO TRENCHING, THEREFORE, NO SEPARATE PAYMENT WILL BE MADE.
7. WHERE WATER AND SANITARY SEWER LINES CROSS, THE SANITARY SEWER LINE SHALL BE INSTALLED AS PRESSURE PIPE BETWEEN MANHOLES IF 18 INCHES OF VERTICAL SEPARATION DOES NOT EXIST.
8. ALL SANITARY SEWER MANHOLES SHALL BE 4' DIAMETER TYPE "C" MANHOLES PER C.O.A. STD. DWG. 2101 UNLESS OTHERWISE NOTED.

WATER SERVICE SCHEDULE

LOT	STA	SIZE	TYPE	TC
19	66+14.91	3/4"	SINGLE	47.76
21	69+44.81	3/4"	SINGLE	59.19
22	71+08.67	3/4"	SINGLE	64.86
24	74+38.62	3/4"	SINGLE	68.01
N/A	74+21.62	1"	SINGLE	67.91

NOTE: WATER SERVICES TO BE INSTALLED AT FUTURE TOP OF CURB ELEVATION AT BACK OF FUTURE CURB LOCATION.

SANITARY SEWER SERVICE SCHEDULE

LOT	STA	SIZE	INV @ PL
19	66+22.91	4"	5642.00
21	69+52.81	4"	5653.50
22	71+16.67	4"	5659.50
24	74+46.63	4"	5663.00

JEFF MORTENSEN & ASSOCIATES, INC.
6010-B MIDWAY PARK BLVD. N.E.
ALBUQUERQUE NEW MEXICO 87109
ENGINEERS SURVEYORS (505) 345-4250
FAX: 505 345-4254 ESTABLISHED 1977

2002.050A8

AS BUILT INFORMATION

CONTRACTOR	C.C.M.	DATE 2-OCT 2004
WORK STAKED BY	JMA	DATE 10/04
INSPECTOR'S ACCEPTANCE BY	J.G.	DATE 12/04
FIELD VERIFICATION BY	JMA	DATE 1/05
DRAWINGS CORRECTED BY	MICRO-FILM INFORMATION	
	RECORDED BY	DATE
		NO.

BENCH MARKS

PROJECT BENCHMARK- ACS STATION "HEAVEN" (TIED TO PASEO DEL NORTE ROADWAY CONSTRUCTION IN 1999) PREVIOUS ELEVATION = 5376.79 FEET (NGVD 1929). THIS BENCHMARK HAS BEEN USED TO PROVIDE UNIFORMITY BETWEEN THIS SURVEY AND THE PREVIOUS SURVEYS CONDUCTED FOR RELATED NORTH DOMINGO BACA ARROYO PROJECTS. THE ELEVATION FOR ACS STATION "5-C20", AN ACS 1 3/4" ALUMINUM DISK STAMPED "ACS BM, 5-C20", EPOXIED TO THE TOP OF THE CONCRETE DROP INLET, AT THE NNE CURB RETURN IN THE NORTHEAST QUADRANT OF THE INTERSECTION OF VENTURA STREET AND ANAHEIM AVENUE N.E., BASED UPON THIS DATUM IS 5552.84 FEET (NGVD 1929). THE C.O.A. PUBLISHED ELEV. IS 5552.71' (NGVD 1929)

SURVEY INFORMATION

FIELD NOTES

NO.	BY	DATE
20502	JMA	03/03

ENGINEER'S SEAL

L. DALE MEANS NEW MEXICO 13675 REGISTERED PROFESSIONAL ENGINEER
04/21/2004

JMA

RECORD DRAWING

NO.	DATE	REMARKS	BY
A	10/04	Revisions	JMA

		Date
Designed By	G.M.	03-2004
Drawn By	S.G.H.	03-2004
Checked By	G.M.	04-2004

CITY OF ALBUQUERQUE
PUBLIC WORKS DEPARTMENT
ENGINEERING DEVELOPMENT GROUP

TITLE: CARMEL AVENUE N.E.
WATER AND SANITARY SEWER IMPROVEMENTS PLAN AND PROFILE
OCOTILLO SUBDIVISION

Design Review Committee | City Engineer Approval | Last Design Update | Mo./Day/Yr. | Mo./Day/Yr.

City Project No.	Zone Map No.	Sheet	Of
729181	C-21	18	25

File Path: E:\WK\WORK\20050A\
File Name: 20050A01.DWG
Plot Date: 04-20-2004
Plot Time: 4:16 pm

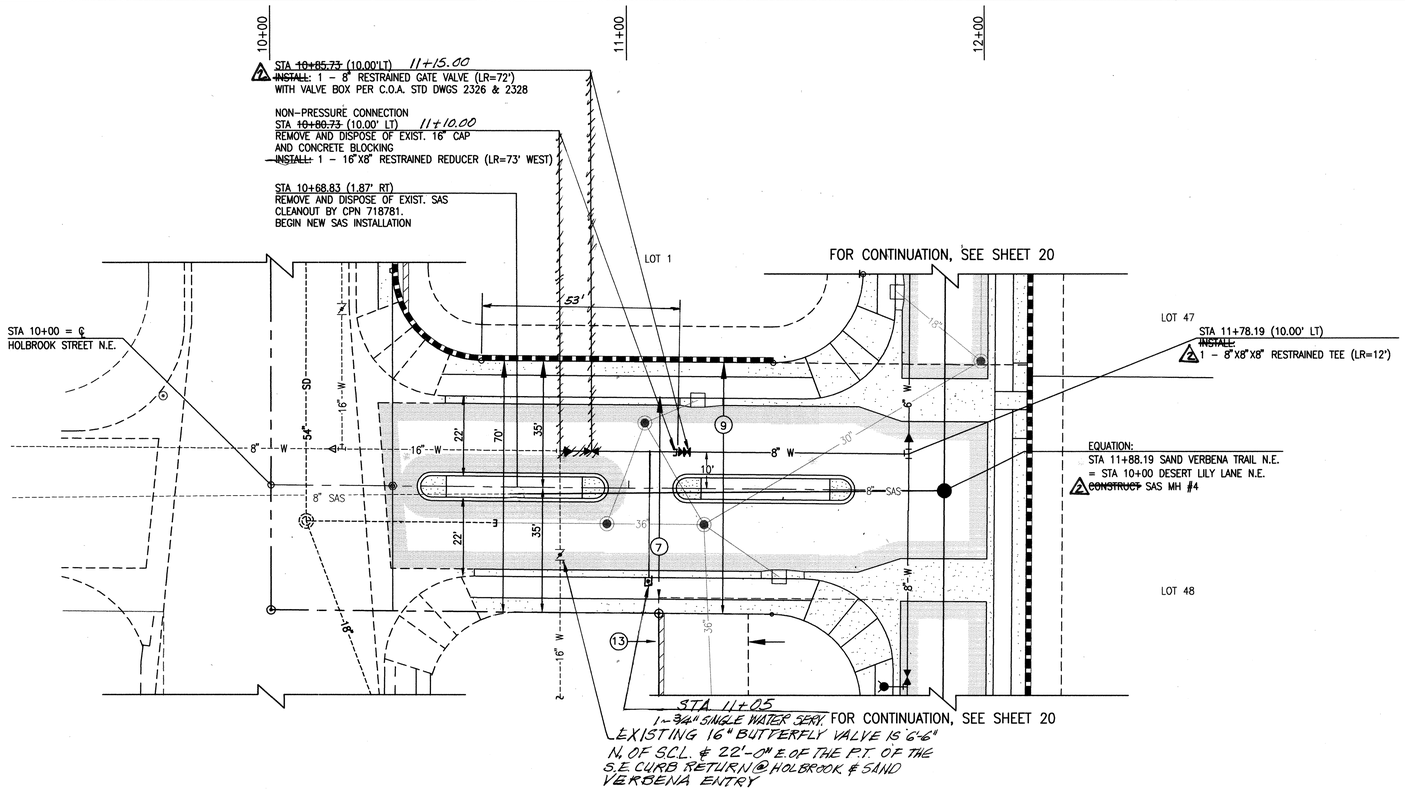

SAND VERBENA TRAIL N.E.

SCALE:
HORIZONTAL: 1" = 20'
VERTICAL: 1" = 10'

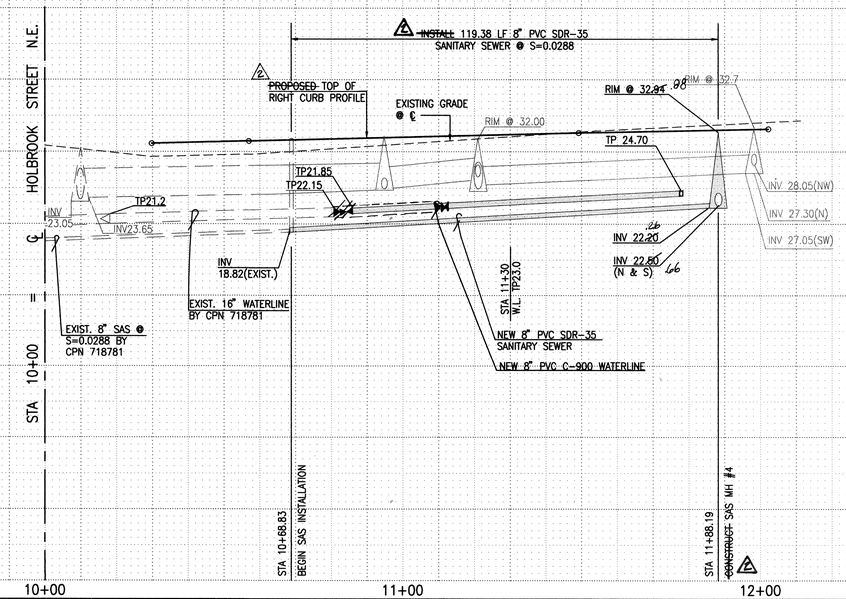

RECORD DRAWING

SEE SHEET 1 FOR CERTIFICATION

ELEVATIONS ARE IN NGVD 1929

WATER LINE CONSTRUCTION NOTES:

1. ALL STATIONING IS BASED ON STREET CENTERLINE UNLESS INDICATED OTHERWISE.
2. FOR ALL LINES 12" AND SMALLER, WATER MAIN SHALL BE PVC C-900 PIPE OR AS APPROVED BY THE CITY OF ALBUQUERQUE CITY ENGINEER. DUCTILE IRON IS AN ACCEPTABLE PIPE MATERIAL IN LIEU OF PVC.
3. FOR ALL LINES 14" AND LARGER, WATER MAIN SHALL BE DUCTILE IRON OR PVC C-905 OR AS APPROVED BY THE CITY OF ALBUQUERQUE CITY ENGINEER. CONCRETE CYLINDER IS AN ACCEPTABLE PIPE MATERIAL IN LIEU OF DUCTILE IRON.
4. WATER LINE SHALL HAVE A MINIMUM COVER OF 3'-0" (FINISHED GRADE TO TOP OF PIPE). EXTRA DEPTH TRENCHING, IF REQUIRED, SHALL BE CONSIDERED INCIDENTAL TO CONSTRUCTION, THEREFORE, NO SEPARATE PAYMENT WILL BE MADE.
5. ELECTRONIC MARKER DISCS (EMD) SHALL BE INSTALLED IN ACCORDANCE WITH THE STANDARD SPECIFICATION.
6. IN ACCORDANCE WITH SECTION 801 OF THE "STANDARD SPECIFICATIONS", METALIZED DETECTABLE WARNING TAPE SHALL BE INSTALLED 18" ABOVE ALL PVC PIPE INSTALLED ON THIS PROJECT.
7. VALVE STEM AND FIRE HYDRANT EXTENSIONS SHALL BE PROVIDED IN ACCORDANCE WITH THE STANDARD SPECIFICATIONS. THE COST OF EACH EXTENSION SHALL BE CONSIDERED INCIDENTAL TO CONSTRUCTION THEREFORE NO SEPARATE PAYMENT WILL BE MADE.
8. JOINT RESTRAINT SHALL BE PROVIDED ON ALL JOINTS OF FIRE HYDRANT LEGS FROM TEE TO FIRE HYDRANT INCLUDING THE TEE AND FIRE HYDRANT.
9. FOR THE PURPOSES OF THIS PROJECT, ALL RESTRAINED JOINTS AND JOINT RESTRAINT SHALL BE MECHANICALLY RESTRAINED. JOINT RESTRAINT LENGTHS SPECIFIED HEREON ARE THE LENGTHS TO BE RESTRAINED EACH SIDE OF THE FITTING.
10. THE CONTRACTOR SHALL BE RESPONSIBLE FOR SELECTING APPROPRIATE MEANS AND METHODS TO EXCAVATE AND TRENCH AND INSTALL PIPE SO AS TO NOT EXCEED RIGHT-OF-WAY OR EASEMENT LIMITS, AND SO AS NOT TO INTERFERE WITH OTHER UTILITIES. THIS SHALL BE CONSIDERED INCIDENTAL TO TRENCHING, THEREFORE, NO SEPARATE PAYMENT WILL BE MADE.
11. THE CONTRACTOR SHALL BE RESPONSIBLE FOR PROTECTING, SUPPORTING AND REPLACING, IF DAMAGED, ALL OTHER UTILITIES ENCOUNTERED DURING CONSTRUCTION. THIS SHALL BE CONSIDERED INCIDENTAL TO TRENCHING, THEREFORE, NO SEPARATE PAYMENT WILL BE MADE.
12. WHERE WATER AND SANITARY SEWER LINES CROSS, THE SANITARY SEWER LINE SHALL BE INSTALLED AS PRESSURE PIPE BETWEEN MANHOLES IF 18 INCHES OF VERTICAL SEPARATION DOES NOT EXIST.
13. ALL FIRE HYDRANTS SHALL BE SECURELY WRAPPED IN BLACK PLASTIC UNTIL SUCH TIME AS THE NEW WATER LINE IS PUT INTO SERVICE BY WATER SYSTEM DIVISION PERSONNEL.

SANITARY SEWER CONSTRUCTION NOTES:

1. ALL STATIONING IS BASED ON STREET CENTERLINE UNLESS INDICATED OTHERWISE.
2. ALL SEWER PIPE SHALL BE PVC (SDR-35).
3. SLOPES SHOWN ON THE PROFILES ARE BASED ON TRUE DISTANCES.
4. SEWER SERVICE LATERALS SHALL BE PROVIDED WITH ELECTRONIC MARKER DISCS (EMD) AS PER CITY OF ALBUQUERQUE STANDARD DRAWING 2125. EMD SHALL BE PROVIDED IN ACCORDANCE WITH THE STANDARD SPECIFICATION.
5. THE CONTRACTOR SHALL BE RESPONSIBLE FOR SELECTING APPROPRIATE MEANS AND METHODS TO EXCAVATE AND TRENCH AND INSTALL PIPE SO AS TO NOT EXCEED RIGHT-OF-WAY OR EASEMENT LIMITS, AND SO AS NOT TO INTERFERE WITH OTHER UTILITIES. THIS SHALL BE CONSIDERED INCIDENTAL TO TRENCHING, THEREFORE, NO SEPARATE PAYMENT WILL BE MADE.
6. THE CONTRACTOR SHALL BE RESPONSIBLE FOR PROTECTING, SUPPORTING AND REPLACING, IF DAMAGED, ALL OTHER UTILITIES ENCOUNTERED DURING CONSTRUCTION. THIS SHALL BE CONSIDERED INCIDENTAL TO TRENCHING, THEREFORE, NO SEPARATE PAYMENT WILL BE MADE.
7. WHERE WATER AND SANITARY SEWER LINES CROSS, THE SANITARY SEWER LINE SHALL BE INSTALLED AS PRESSURE PIPE BETWEEN MANHOLES IF 18 INCHES OF VERTICAL SEPARATION DOES NOT EXIST.
8. ALL SANITARY SEWER MANHOLES SHALL BE 4' DIAMETER TYPE "C" MANHOLES PER C.O.A. STD. DWG. 2101 UNLESS OTHERWISE NOTED.

AS BUILT INFORMATION

CONTRACTOR: CCM DATE: ~~JUNE-21~~ 2004
WORK STAKED BY: JMA FOR PUNTEDEE DATE: 10/04
INSPECTOR'S ACCEPTANCE BY: J.G. DATE: 12/04
FIELD VERIFICATION BY: J.M.A. DATE: 1/05
CORRECTIONS CORRECTED BY: MICRO-FILM INFORMATION
RECORDED BY: DATE:
DRAWN BY: DATE:
SECTION OF VENTURA STREET AND ANAHEIM AVENUE N.E., BASED UPON THIS DATUM.
IS 5552.84 FEET (NGVD 1929). THE C.O.A. PUBLISHED ELEV. IS 5552.71 (NGVD 1929)

SURVEY INFORMATION

FIELD NOTES

NO.	BY	DATE
20502	JMA	03/03

BENCH MARKS

PROJECT BENCHMARK- ACS STATION "HEAVEN" (TIED TO PASEO DEL NORTE ROADWAY CONSTRUCTION IN 1999) PREVIOUS ELEVATION = 5378.79 FEET (NGVD 1929). THIS BENCHMARK HAS BEEN USED TO PROVIDE UNIFORMITY BETWEEN THIS SURVEY AND THE PREVIOUS SURVEYS CONDUCTED FOR RELATED NORTH DOMINGO BACA ARROYO PROJECTS. THE ELEVATION FOR ACS STATION "5-C20", AN ACS 1 3/4" ALUMINUM DISK STAMPED "ACS BM, 5-C20", EPOXIED TO THE TOP OF THE CONCRETE DROP INLET, AT THE NNE CURB RETURN IN THE NORTHEAST QUADRANT OF THE INTERSECTION OF VENTURA STREET AND ANAHEIM AVENUE N.E., BASED UPON THIS DATUM IS 5552.84 FEET (NGVD 1929). THE C.O.A. PUBLISHED ELEV. IS 5552.71 (NGVD 1929)

ENGINEER'S SEAL

LEGRANDE MELANO
NEW MEXICO
13678
REGISTERED PROFESSIONAL ENGINEER
04/14/2004

NO.	DATE	REMARKS	BY
1	10/04	RECORD DRAWING	JMA

Revisions

DESIGN		
Designed By	G.M.	Date 03-2004
Drawn By	S.G.H.	Date 03-2004
Checked By	G.M.	Date 04-2004

JEFF MORTENSEN & ASSOCIATES, INC.
☐ 6010-B MIDWAY PARK BLVD. N.E.
☐ ALBUQUERQUE ☐ NEW MEXICO 87109
☐ ENGINEERS ☐ SURVEYORS (505) 345-4250
☐ FAX: 505 345-4254 ☐ ESTABLISHED 1977

2002.050A8

CITY OF ALBUQUERQUE
PUBLIC WORKS DEPARTMENT
ENGINEERING DEVELOPMENT GROUP

TITLE: OCOTILLO SUBDIVISION
WATER AND SANITARY SEWER IMPROVEMENTS PLAN AND PROFILE
SAND VERBENA TRAIL N.E. (ENTRY)

Design Review Committee | City Engineer Approval | Last Design Update | Mo./Day/Yr. | Mo./Day/Yr.

City Project No. 729181 | Zone Map No. C-21 | Sheet 19 Of 25

File Path: E:\MWA\WORK\2002\A\
File Name: 20504U4.DWG
Plot Date: 04-20-2004
Plot Time: 4:19 pm

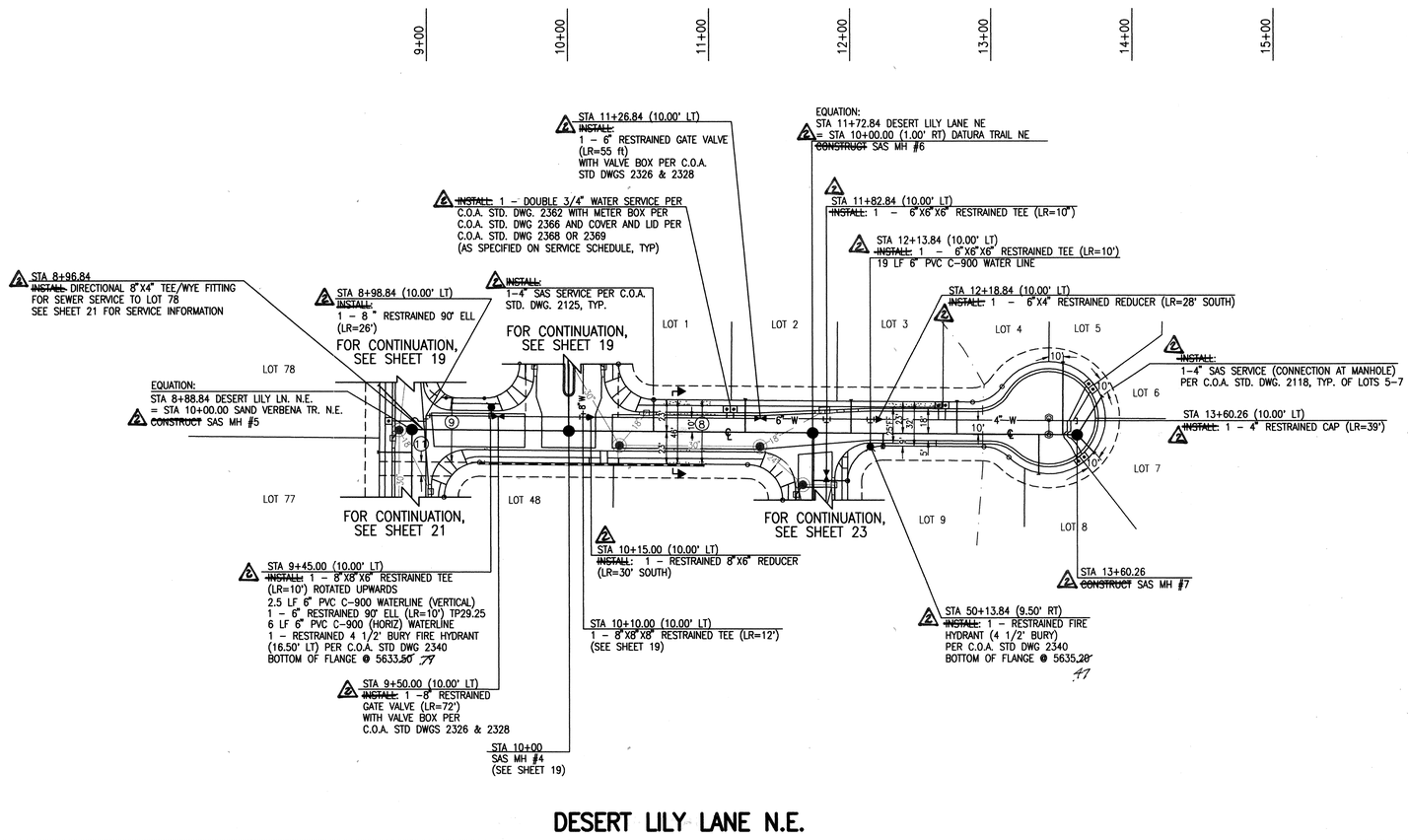

SCANNED BY MEGA DEPO

DESERT LILY LANE N.E.

SCALE:
HORIZONTAL: 1" = 50'
VERTICAL: 1" = 10'

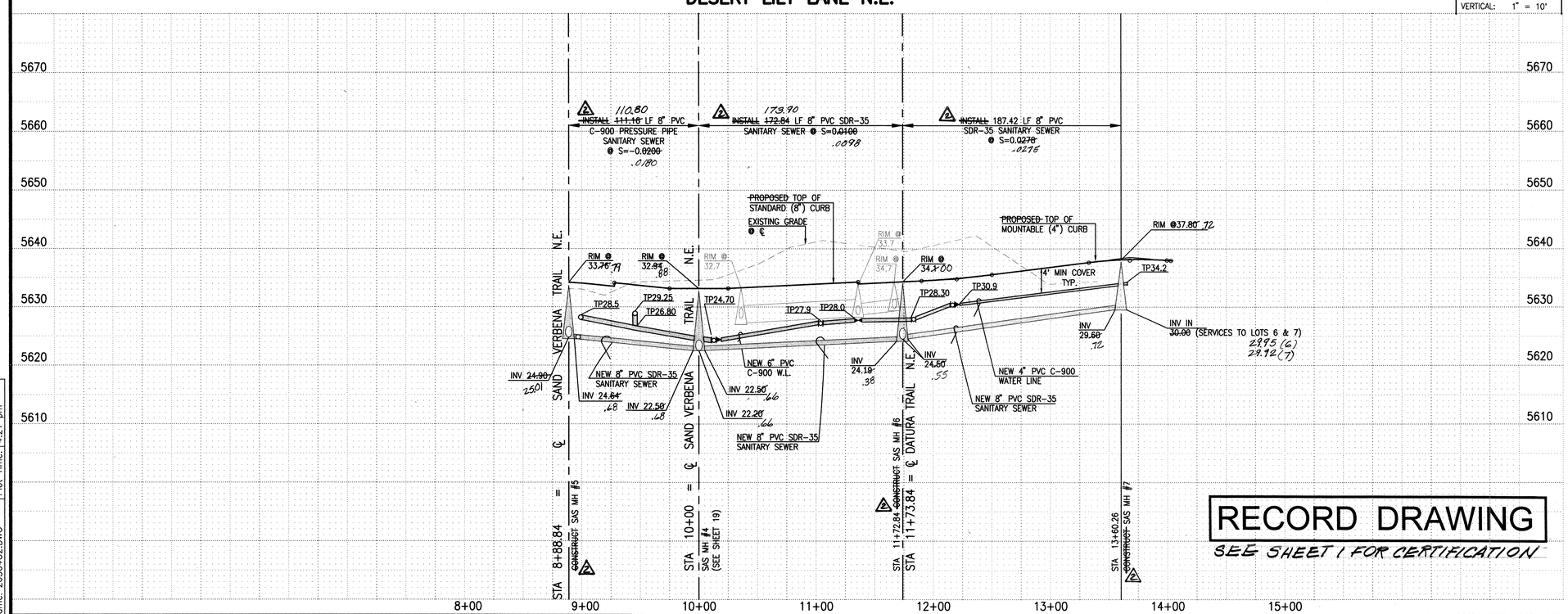

RECORD DRAWING

SEE SHEET 1 FOR CERTIFICATION

ELEVATIONS ARE IN NGVD 1929

WATER LINE CONSTRUCTION NOTES:

1. ALL STATIONING IS BASED ON STREET CENTERLINE UNLESS INDICATED OTHERWISE.
2. FOR ALL LINES 12" AND SMALLER, WATER MAIN SHALL BE PVC C-900 PIPE OR AS APPROVED BY THE CITY OF ALBUQUERQUE CITY ENGINEER. DUCTILE IRON IS AN ACCEPTABLE PIPE MATERIAL IN LIEU OF PVC.
3. FOR ALL LINES 14" AND LARGER, WATER MAIN SHALL BE DUCTILE IRON OR PVC C-905 OR AS APPROVED BY THE CITY OF ALBUQUERQUE CITY ENGINEER. CONCRETE CYLINDER IS AN ACCEPTABLE PIPE MATERIAL IN LIEU OF DUCTILE IRON.
4. WATER LINE SHALL HAVE A MINIMUM COVER OF 3'-0" (FINISHED GRADE TO TOP OF PIPE). EXTRA DEPTH TRENCHING, IF REQUIRED, SHALL BE CONSIDERED INCIDENTAL TO CONSTRUCTION, THEREFORE, NO SEPARATE PAYMENT WILL BE MADE.
5. ELECTRONIC MARKER DISCS (EMD) SHALL BE INSTALLED IN ACCORDANCE WITH THE STANDARD SPECIFICATION.
6. IN ACCORDANCE WITH SECTION 801 OF THE "STANDARD SPECIFICATIONS", METALIZED DETECTABLE WARNING TAPE SHALL BE INSTALLED 18" ABOVE ALL PVC PIPE INSTALLED ON THIS PROJECT.
7. VALVE STEM AND FIRE HYDRANT EXTENSIONS SHALL BE PROVIDED IN ACCORDANCE WITH THE STANDARD SPECIFICATIONS. THE COST OF EACH EXTENSION SHALL BE CONSIDERED INCIDENTAL TO CONSTRUCTION THEREFORE NO SEPARATE PAYMENT WILL BE MADE.
8. JOINT RESTRAINT SHALL BE PROVIDED ON ALL JOINTS OF FIRE HYDRANT LEGS FROM TEE TO FIRE HYDRANT INCLUDING THE TEE AND FIRE HYDRANT.
9. FOR THE PURPOSES OF THIS PROJECT, ALL RESTRAINED JOINTS AND JOINT RESTRAINT SHALL BE MECHANICALLY RESTRAINED. JOINT RESTRAINT LENGTHS SPECIFIED HEREON ARE THE LENGTHS TO BE RESTRAINED EACH SIDE OF THE FITTING.
10. THE CONTRACTOR SHALL BE RESPONSIBLE FOR SELECTING APPROPRIATE MEANS AND METHODS TO EXCAVATE AND TRENCH AND INSTALL PIPE SO AS TO NOT EXCEED RIGHT-OF-WAY OR EASEMENT LIMITS, AND SO AS NOT TO INTERFERE WITH OTHER UTILITIES. THIS SHALL BE CONSIDERED INCIDENTAL TO TRENCHING, THEREFORE, NO SEPARATE PAYMENT WILL BE MADE.
11. THE CONTRACTOR SHALL BE RESPONSIBLE FOR PROTECTING, SUPPORTING AND REPLACING, IF DAMAGED, ALL OTHER UTILITIES ENCOUNTERED DURING CONSTRUCTION. THIS SHALL BE CONSIDERED INCIDENTAL TO TRENCHING, THEREFORE, NO SEPARATE PAYMENT WILL BE MADE.
12. WHERE WATER AND SANITARY SEWER LINES CROSS, THE SANITARY SEWER LINE SHALL BE INSTALLED AS PRESSURE PIPE BETWEEN MANHOLES IF 18 INCHES OF VERTICAL SEPARATION DOES NOT EXIST.
13. ALL FIRE HYDRANTS SHALL BE SECURELY WRAPPED IN BLACK PLASTIC UNTIL SUCH TIME AS THE NEW WATER LINE IS PUT INTO SERVICE BY WATER SYSTEM DIVISION PERSONNEL.

SANITARY SEWER CONSTRUCTION NOTES:

1. ALL STATIONING IS BASED ON STREET CENTERLINE UNLESS INDICATED OTHERWISE.
2. ALL SEWER PIPE SHALL BE PVC (SDR-35).
3. SLOPES SHOWN ON THE PROFILES ARE BASED ON TRUE DISTANCES.
4. SEWER SERVICE LATERALS SHALL BE PROVIDED WITH ELECTRONIC MARKER DISCS (EMD) AS PER CITY OF ALBUQUERQUE STANDARD DRAWING 2125. EMD SHALL BE PROVIDED IN ACCORDANCE WITH THE STANDARD SPECIFICATION.
5. THE CONTRACTOR SHALL BE RESPONSIBLE FOR SELECTING APPROPRIATE MEANS AND METHODS TO EXCAVATE AND TRENCH AND INSTALL PIPE SO AS TO NOT EXCEED RIGHT-OF-WAY OR EASEMENT LIMITS, AND SO AS NOT TO INTERFERE WITH OTHER UTILITIES. THIS SHALL BE CONSIDERED INCIDENTAL TO TRENCHING, THEREFORE, NO SEPARATE PAYMENT WILL BE MADE.
6. THE CONTRACTOR SHALL BE RESPONSIBLE FOR PROTECTING, SUPPORTING AND REPLACING, IF DAMAGED, ALL OTHER UTILITIES ENCOUNTERED DURING CONSTRUCTION. THIS SHALL BE CONSIDERED INCIDENTAL TO TRENCHING, THEREFORE, NO SEPARATE PAYMENT WILL BE MADE.
7. WHERE WATER AND SANITARY SEWER LINES CROSS, THE SANITARY SEWER LINE SHALL BE INSTALLED AS PRESSURE PIPE BETWEEN MANHOLES IF 18 INCHES OF VERTICAL SEPARATION DOES NOT EXIST.
8. ALL SANITARY SEWER MANHOLES SHALL BE 4' DIAMETER TYPE "C" MANHOLES PER C.O.A. STD. DWG. 2101 UNLESS OTHERWISE NOTED.

WATER SERVICE SCHEDULE

LOT(S)	SIZE	TYPE	STA	COVER/LID DWG
1/2	3/4"	DOUBLE	11+15	2368 (STD)
3/4	3/4"	DOUBLE	12+65	2369 (HVY)
5/6	3/4"	DOUBLE	AS SHOWN	2369 (HVY)
7/8	3/4"	DOUBLE	AS SHOWN	2369 (HVY)

SANITARY SEWER SERVICE SCHEDULE

LOT	SIZE	STA	INV @ ℄
1	4"	10+60	5628.00
2	4"	11+25	5629.00
3	4"	12+00	5628.00
9	4"	12+22.84	5630.00
4	4"	12+75	5630.00
8	4"	13+33.26	5631.50
5	4"	13+50.00	5632.00
6	4"	AS SHOWN	5633.00
7	4"	AS SHOWN	5633.50

JEFF MORTENSEN & ASSOCIATES, INC.
6010-B MIDWAY PARK BLVD. N.E.
ALBUQUERQUE NEW MEXICO 87109
ENGINEERS SURVEYORS (505) 345-4250
FAX: 505 345-4254 ESTABLISHED 1977

2002.0504 8

CITY OF ALBUQUERQUE
PUBLIC WORKS DEPARTMENT
ENGINEERING DEVELOPMENT GROUP

TITLE: OCOTILLO SUBDIVISION
WATER AND SANITARY SEWER IMPROVEMENTS PLAN AND PROFILE
DESERT LILY LANE N.E.

Design Review Committee: APPROVED
City Engineer Approval: 2004 CITY ENGINEER
Last Design Update: Mo./Day/Yr. | Mo./Day/Yr.

City Project No. 729181 | Zone Map No. C-21 | Sheet 20 Of 25

AS BUILT INFORMATION
CONTRACTOR: CCM
WORK STAKED BY: JMA
INSPECTOR'S ACCEPTANCE BY: PDS SOUTHWEST
DATE: 04-20-2004
FIELD VERIFICATION BY: J.G.
DATE: 12/04
DRAWINGS CORRECTED BY: JMA
DATE: 1/05
MICRO-FILM INFORMATION
RECORDED BY
DATE
NO.

BENCH MARKS

PROJECT BENCHMARK- ACS STATION "HEAVEN" (TIED TO PASEO DEL NORTE ROADWAY CONSTRUCTION IN 1999) PREVIOUS ELEVATION = 5378.79 FEET (NGVD 1929). THIS BENCHMARK HAS BEEN USED TO PROVIDE UNIFORMITY BETWEEN THIS SURVEY AND THE PREVIOUS SURVEYS CONDUCTED FOR RELATED NORTH DOMINGO BACA ARROYO PROJECTS. THE ELEVATION FOR ACS STATION "5-C20", AN ACS 1 3/4" ALUMINUM DISK STAMPED "ACS BM, 5-C20", EPOXIED TO THE TOP OF THE CONCRETE DROP INLET, AT THE NNE CURB RETURN IN THE NORTHEAST QUADRANT OF THE INTERSECTION OF VENTURA STREET AND ANAHEM AVENUE N.E., BASED UPON THIS DATUM IS 5352.84 FEET (NGVD 1929). THE C.O.A. PUBLISHED ELEV. IS 5352.71 (NGVD 1929)

SURVEY INFORMATION

FIELD NOTES

NO.	BY	DATE
20502	JMA	03/03

ENGINEER'S SEAL
J. ALFREME MEANS NEW MEXICO 13679 REGISTERED PROFESSIONAL ENGINEER
04/21/2004

JMA

RECORD DRAWING

NO.	DATE	REMARKS
1		Revisions
		DESIGN

	BY	Date
Designed By	G.M.	03-2004
Drawn By	S.G.H.	03-2004
Checked By	G.M.	04-2004

File Path: G:\MWORK\PROJECTS\
File Name: 20504D2.DWG
Plot Date: 04-20-2004
Plot Time: 4:21 pm

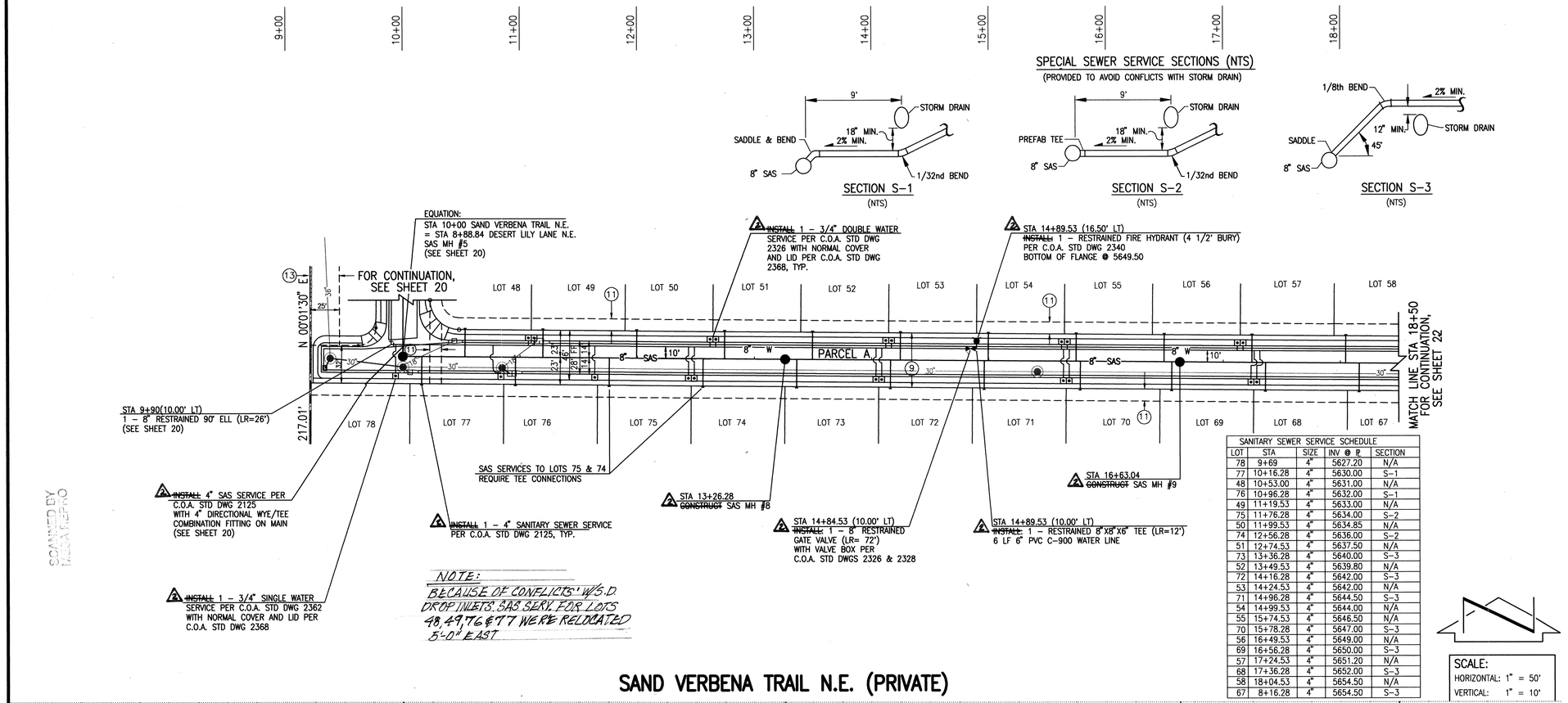

SANITARY SEWER SERVICE SCHEDULE				
LOT	STA	SIZE	INV @ ℄	SECTION
78	9+69	4"	5627.20	N/A
77	10+16.28	4"	5630.00	S-1
48	10+53.00	4"	5631.00	N/A
76	10+96.28	4"	5632.00	S-1
49	11+19.53	4"	5633.00	N/A
75	11+76.28	4"	5634.00	S-2
50	11+99.53	4"	5634.85	N/A
74	12+56.28	4"	5636.00	S-2
51	12+74.53	4"	5637.50	N/A
73	13+36.28	4"	5640.00	S-3
52	13+49.53	4"	5639.80	N/A
72	14+16.28	4"	5642.00	S-3
53	14+24.53	4"	5642.00	N/A
71	14+96.28	4"	5644.50	S-3
54	14+99.53	4"	5644.00	N/A
55	15+74.53	4"	5646.50	N/A
70	15+78.28	4"	5647.00	S-3
56	16+49.53	4"	5649.00	N/A
69	16+56.28	4"	5650.00	S-3
57	17+24.53	4"	5651.20	N/A
68	17+36.28	4"	5652.00	S-3
58	18+04.53	4"	5654.50	N/A
67	8+16.28	4"	5654.50	S-3

SCALE:
HORIZONTAL: 1" = 50'
VERTICAL: 1" = 10'

WATER LINE CONSTRUCTION NOTES:

1. ALL STATIONING IS BASED ON STREET CENTERLINE UNLESS INDICATED OTHERWISE.
2. FOR ALL LINES 12" AND SMALLER, WATER MAIN SHALL BE PVC C-900 PIPE OR AS APPROVED BY THE CITY OF ALBUQUERQUE CITY ENGINEER. DUCTILE IRON IS AN ACCEPTABLE PIPE MATERIAL IN LIEU OF PVC.
3. FOR ALL LINES 14" AND LARGER, WATER MAIN SHALL BE DUCTILE IRON OR PVC C-905 OR AS APPROVED BY THE CITY OF ALBUQUERQUE CITY ENGINEER. CONCRETE CYLINDER IS AN ACCEPTABLE PIPE MATERIAL IN LIEU OF DUCTILE IRON.
4. WATER LINE SHALL HAVE A MINIMUM COVER OF 3'-0" (FINISHED GRADE TO TOP OF PIPE). EXTRA DEPTH TRENCHING, IF REQUIRED, SHALL BE CONSIDERED INCIDENTAL TO CONSTRUCTION, THEREFORE, NO SEPARATE PAYMENT WILL BE MADE.
5. ELECTRONIC MARKER DISCS (EMD) SHALL BE INSTALLED IN ACCORDANCE WITH THE STANDARD SPECIFICATION.
6. IN ACCORDANCE WITH SECTION 801 OF THE "STANDARD SPECIFICATIONS", METALIZED DETECTABLE WARNING TAPE SHALL BE INSTALLED 18" ABOVE ALL PVC PIPE INSTALLED ON THIS PROJECT.
7. VALVE STEM AND FIRE HYDRANT EXTENSIONS SHALL BE PROVIDED IN ACCORDANCE WITH THE STANDARD SPECIFICATIONS. THE COST OF EACH EXTENSION SHALL BE CONSIDERED INCIDENTAL TO CONSTRUCTION THEREFORE NO SEPARATE PAYMENT WILL BE MADE.
8. JOINT RESTRAINT SHALL BE PROVIDED ON ALL JOINTS OF FIRE HYDRANT LEGS FROM TEE TO FIRE HYDRANT INCLUDING THE TEE AND FIRE HYDRANT.
9. FOR THE PURPOSES OF THIS PROJECT, ALL RESTRAINED JOINTS AND JOINT RESTRAINT SHALL BE MECHANICALLY RESTRAINED. JOINT RESTRAINT LENGTHS SPECIFIED HEREON ARE THE LENGTHS TO BE RESTRAINED EACH SIDE OF THE FITTING.
10. THE CONTRACTOR SHALL BE RESPONSIBLE FOR SELECTING APPROPRIATE MEANS AND METHODS TO EXCAVATE AND TRENCH AND INSTALL PIPE SO AS TO NOT EXCEED RIGHT-OF-WAY OR EASEMENT LIMITS, AND SO AS NOT TO INTERFERE WITH OTHER UTILITIES. THIS SHALL BE CONSIDERED INCIDENTAL TO TRENCHING, THEREFORE, NO SEPARATE PAYMENT WILL BE MADE.
11. THE CONTRACTOR SHALL BE RESPONSIBLE FOR PROTECTING, SUPPORTING AND REPLACING, IF DAMAGED, ALL OTHER UTILITIES ENCOUNTERED DURING CONSTRUCTION. THIS SHALL BE CONSIDERED INCIDENTAL TO TRENCHING, THEREFORE, NO SEPARATE PAYMENT WILL BE MADE.
12. WHERE WATER AND SANITARY SEWER LINES CROSS, THE SANITARY SEWER LINE SHALL BE INSTALLED AS PRESSURE PIPE BETWEEN MANHOLES IF 18 INCHES OF VERTICAL SEPARATION DOES NOT EXIST.
13. ALL FIRE HYDRANTS SHALL BE SECURELY WRAPPED IN BLACK PLASTIC UNTIL SUCH TIME AS THE NEW WATER LINE IS PUT INTO SERVICE BY WATER SYSTEM DIVISION PERSONNEL.

SANITARY SEWER CONSTRUCTION NOTES:

1. ALL STATIONING IS BASED ON STREET CENTERLINE UNLESS INDICATED OTHERWISE.
2. ALL SEWER PIPE SHALL BE PVC (SDR-35).
3. SLOPES SHOWN ON THE PROFILES ARE BASED ON TRUE DISTANCES.
4. SEWER SERVICE LATERALS SHALL BE PROVIDED WITH ELECTRONIC MARKER DISCS (EMD) AS PER CITY OF ALBUQUERQUE STANDARD DRAWING 2125. EMD SHALL BE PROVIDED IN ACCORDANCE WITH THE STANDARD SPECIFICATION.
5. THE CONTRACTOR SHALL BE RESPONSIBLE FOR SELECTING APPROPRIATE MEANS AND METHODS TO EXCAVATE AND TRENCH AND INSTALL PIPE SO AS TO NOT EXCEED RIGHT-OF-WAY OR EASEMENT LIMITS, AND SO AS NOT TO INTERFERE WITH OTHER UTILITIES. THIS SHALL BE CONSIDERED INCIDENTAL TO TRENCHING, THEREFORE, NO SEPARATE PAYMENT WILL BE MADE.
6. THE CONTRACTOR SHALL BE RESPONSIBLE FOR PROTECTING, SUPPORTING AND REPLACING, IF DAMAGED, ALL OTHER UTILITIES ENCOUNTERED DURING CONSTRUCTION. THIS SHALL BE CONSIDERED INCIDENTAL TO TRENCHING, THEREFORE, NO SEPARATE PAYMENT WILL BE MADE.
7. WHERE WATER AND SANITARY SEWER LINES CROSS, THE SANITARY SEWER LINE SHALL BE INSTALLED AS PRESSURE PIPE BETWEEN MANHOLES IF 18 INCHES OF VERTICAL SEPARATION DOES NOT EXIST.
8. ALL SANITARY SEWER MANHOLES SHALL BE 4' DIAMETER TYPE "C" MANHOLES PER C.O.A. STD. DWG. 2101 UNLESS OTHERWISE NOTED.

WATER SERVICE SCHEDULE			
LOT(S)	STA	TYPE	SIZE
78	9+94	SINGLE	3/4"
77	10+83.78	SINGLE	3/4"
48/49	11+09.53	DOUBLE	3/4"
76	11+63.78	SINGLE	3/4"
75/74	12+46.28	DOUBLE	3/4"
50/51	12+64.53	DOUBLE	3/4"
73/72	14+06.28	DOUBLE	3/4"
52/53	14+14.53	DOUBLE	3/4"
54/55	15+64.53	DOUBLE	3/4"
71/70	15+66.28	DOUBLE	3/4"
56/57	17+14.53	DOUBLE	3/4"
69/68	17+26.28	DOUBLE	3/4"

JEFF MORTENSEN & ASSOCIATES, INC.
6010-B MIDWAY PARK BLVD. N.E.
ALBUQUERQUE NEW MEXICO 87109
ENGINEERS SURVEYORS (505) 345-4250
FAX: 505 345-4254 ESTABLISHED 1977

2002.050A8

AS BUILT INFORMATION
CONTRACTOR C.C.M.
WORK STAKED BY JMA
ACCEPTANCE INSPECTION BY Ray Gutierrez DATE JUNE 27 2004
FIELD VERIFICATION BY J.G. DATE 10/04
DRAWINGS CORRECTED BY JMA DATE 12/04
MICRO-FILM INFORMATION
RECORDED BY DATE
NO. DATE

BENCH MARKS
PROJECT BENCHMARK- ACS STATION "HEAVEN" (TIED TO PASEO DEL NORTE ROAD- WAY CONSTRUCTION IN 1999) PREVIOUS ELEVATION = 5378.79 FEET (NGVD 1929). THIS BENCHMARK HAS BEEN USED TO PROVIDE UNIFORMITY BETWEEN THIS SURVEY AND THE PREVIOUS SURVEYS CONDUCTED FOR RELATED NORTH DOMINGO BACA ARROYO PROJECTS. THE ELEVATION FOR ACS STATION "S-C20", AN ACS 1 3/4" ALUMINUM DISK STAMPED "ACS BM, S-C20", EPOXIED TO THE TOP OF THE CONCRETE DROP INLET, AT THE NNE CURB RETURN IN THE NORTHEAST QUADRANT OF THE INTER-SECTION OF VENTURA STREET AND ANAHEIM AVENUE N.E., BASED UPON THIS DATUM IS 5552.84 FEET (NGVD 1929). THE C.O.A. PUBLISHED ELEV. IS 5552.71 (NGVD 1929)

SURVEY INFORMATION
FIELD NOTES
NO. BY DATE
20502 JMA 03/03

ENGINEER'S SEAL
I GRAEME MEANS NEW MEXICO 13676 PROFESSIONAL ENGINEER
04/21/2004

RECORD DRAWING
NO. DATE REMARKS
Revisions
DESIGN
Designed By G.M. Date 03-2004
Drawn By S.G.H. Date 03-2004
Checked By G.M. Date 04-2004

CITY OF ALBUQUERQUE
PUBLIC WORKS DEPARTMENT
ENGINEERING DEVELOPMENT GROUP

TITLE: OCOTILLO SUBDIVISION
WATER AND SANITARY SEWER IMPROVEMENTS PLAN AND PROFILE
SAND VERBENA TRAIL N.E. STA 9+90.00 TO STA 18+50.00

Design Review Committee: APPROVED MAY 27 2004
City Engineer Approval: APPROVED JUN 1 2004 CITY ENGINEER
Last Design Update | Mo./Day/Yr. | Mo./Day/Yr.

City Project No. 729181 | Zone Map No. C-21 | Sheet 21 Of 25

File Path: E:\MWORK\2002\050A\
File Name: 2050403.DWG
Plot Date: 04-20-2004
Plot Time: 4:34 pm

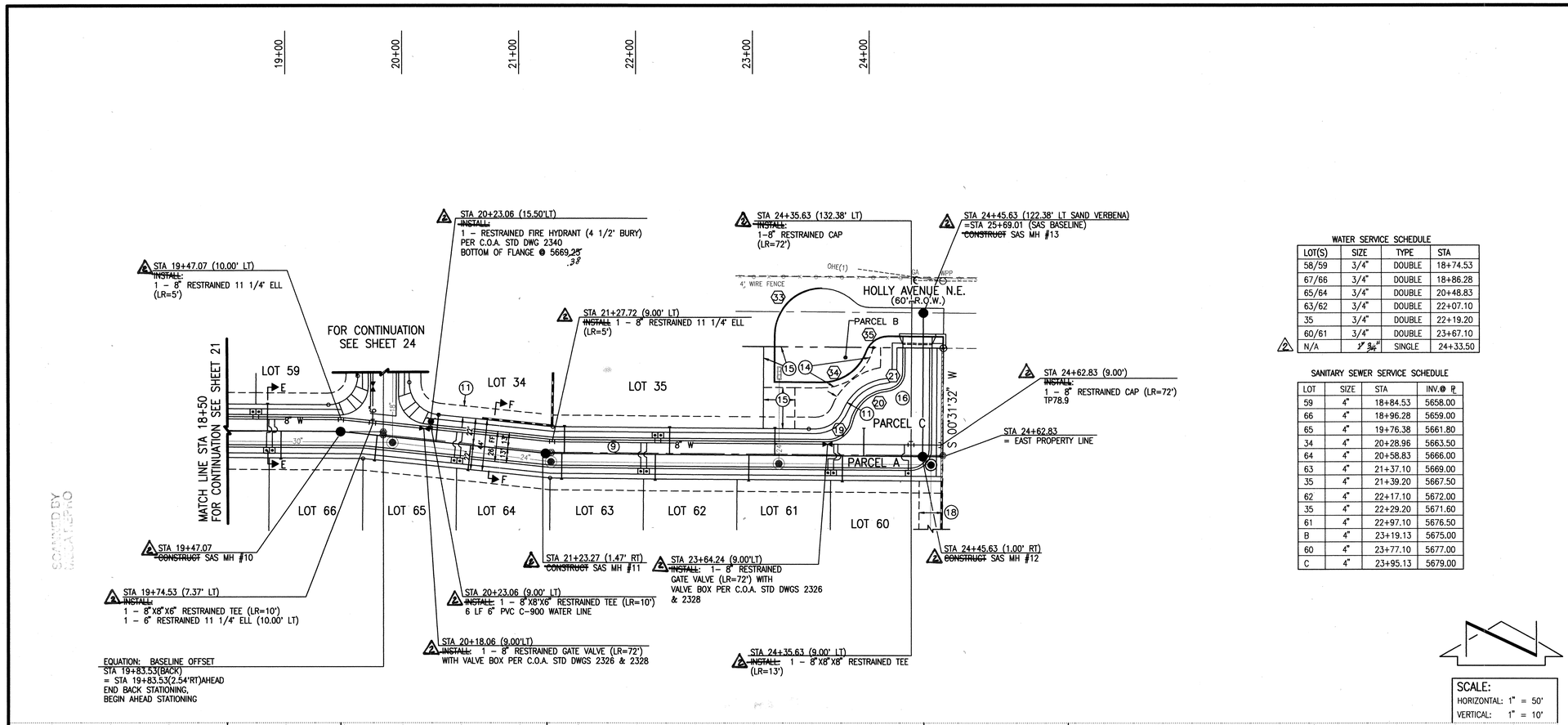

WATER SERVICE SCHEDULE

LOT(S)	SIZE	TYPE	STA
58/59	3/4"	DOUBLE	18+74.53
67/66	3/4"	DOUBLE	18+86.28
65/64	3/4"	DOUBLE	20+48.83
63/62	3/4"	DOUBLE	22+07.10
35	3/4"	DOUBLE	22+19.20
60/61	3/4"	DOUBLE	23+67.10
N/A	~~1~~ 3/4"	SINGLE	24+33.50

SANITARY SEWER SERVICE SCHEDULE

LOT	SIZE	STA	INV.@ PL
59	4"	18+84.53	5658.00
66	4"	18+96.28	5659.00
65	4"	19+76.38	5661.80
34	4"	20+28.96	5663.50
64	4"	20+58.83	5666.00
63	4"	21+37.10	5669.00
35	4"	21+39.20	5667.50
62	4"	22+17.10	5672.00
35	4"	22+29.20	5671.60
61	4"	22+97.10	5676.50
B	4"	23+19.13	5675.00
60	4"	23+77.10	5677.00
C	4"	23+95.13	5679.00

SCALE:
HORIZONTAL: 1" = 50'
VERTICAL: 1" = 10'

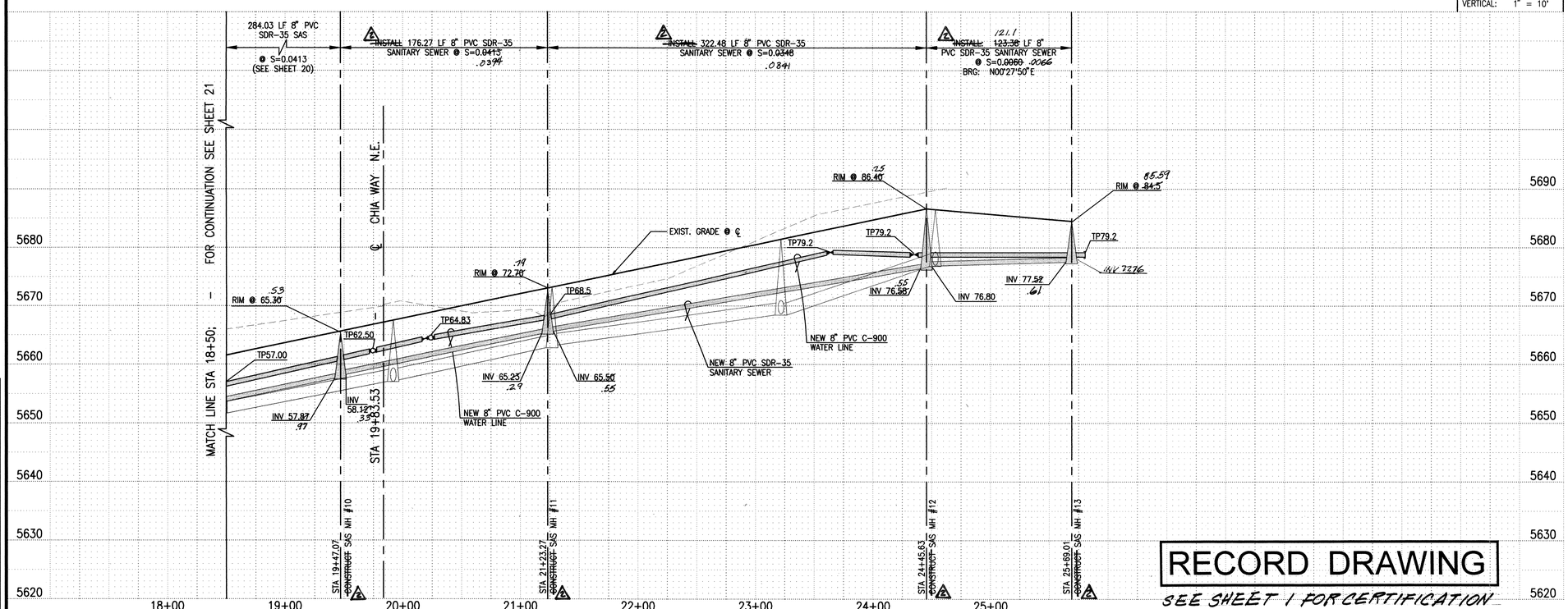

RECORD DRAWING

SEE SHEET 1 FOR CERTIFICATION

ELEVATIONS ARE IN NGVD 1929

WATER LINE CONSTRUCTION NOTES:

1. ALL STATIONING IS BASED ON STREET CENTERLINE UNLESS INDICATED OTHERWISE.
2. FOR ALL LINES 12" AND SMALLER, WATER MAIN SHALL BE PVC C-900 PIPE OR AS APPROVED BY THE CITY OF ALBUQUERQUE CITY ENGINEER. DUCTILE IRON IS AN ACCEPTABLE PIPE MATERIAL IN LIEU OF PVC.
3. FOR ALL LINES 14" AND LARGER, WATER MAIN SHALL BE DUCTILE IRON OR PVC C-905 OR AS APPROVED BY THE CITY OF ALBUQUERQUE CITY ENGINEER. CONCRETE CYLINDER IS AN ACCEPTABLE PIPE MATERIAL IN LIEU OF DUCTILE IRON.
4. WATER LINE SHALL HAVE A MINIMUM COVER OF 3'-0" (FINISHED GRADE TO TOP OF PIPE). EXTRA DEPTH TRENCHING, IF REQUIRED, SHALL BE CONSIDERED INCIDENTAL TO CONSTRUCTION, THEREFORE, NO SEPARATE PAYMENT WILL BE MADE.
5. ELECTRONIC MARKER DISCS (EMD) SHALL BE INSTALLED IN ACCORDANCE WITH THE STANDARD SPECIFICATION.
6. IN ACCORDANCE WITH SECTION 801 OF THE "STANDARD SPECIFICATIONS", METALIZED DETECTABLE WARNING TAPE SHALL BE INSTALLED 18" ABOVE ALL PVC PIPE INSTALLED ON THIS PROJECT.
7. VALVE STEM AND FIRE HYDRANT EXTENSIONS SHALL BE PROVIDED IN ACCORDANCE WITH THE STANDARD SPECIFICATIONS. THE COST OF EACH EXTENSION SHALL BE CONSIDERED INCIDENTAL TO CONSTRUCTION THEREFORE NO SEPARATE PAYMENT WILL BE MADE.
8. JOINT RESTRAINT SHALL BE PROVIDED ON ALL JOINTS OF FIRE HYDRANT LEGS FROM TEE TO FIRE HYDRANT INCLUDING THE TEE AND FIRE HYDRANT.
9. FOR THE PURPOSES OF THIS PROJECT, ALL RESTRAINED JOINTS AND JOINT RESTRAINT SHALL BE MECHANICALLY RESTRAINED. JOINT RESTRAINT LENGTHS SPECIFIED HEREON ARE THE LENGTHS TO BE RESTRAINED EACH SIDE OF THE FITTING.
10. THE CONTRACTOR SHALL BE RESPONSIBLE FOR SELECTING APPROPRIATE MEANS AND METHODS TO EXCAVATE AND TRENCH AND INSTALL PIPE SO AS TO NOT EXCEED RIGHT-OF-WAY OR EASEMENT LIMITS, AND SO AS NOT TO INTERFERE WITH OTHER UTILITIES. THIS SHALL BE CONSIDERED INCIDENTAL TO TRENCHING, THEREFORE, NO SEPARATE PAYMENT WILL BE MADE.
11. THE CONTRACTOR SHALL BE RESPONSIBLE FOR PROTECTING, SUPPORTING AND REPLACING, IF DAMAGED, ALL OTHER UTILITIES ENCOUNTERED DURING CONSTRUCTION. THIS SHALL BE CONSIDERED INCIDENTAL TO TRENCHING, THEREFORE, NO SEPARATE PAYMENT WILL BE MADE.
12. WHERE WATER AND SANITARY SEWER LINES CROSS, THE SANITARY SEWER LINE SHALL BE INSTALLED AS PRESSURE PIPE BETWEEN MANHOLES IF 18 INCHES OF VERTICAL SEPARATION DOES NOT EXIST.
13. ALL FIRE HYDRANTS SHALL BE SECURELY WRAPPED IN BLACK PLASTIC UNTIL SUCH TIME AS THE NEW WATER LINE IS PUT INTO SERVICE BY WATER SYSTEM DIVISION PERSONNEL.

SANITARY SEWER CONSTRUCTION NOTES:

1. ALL STATIONING IS BASED ON STREET CENTERLINE UNLESS INDICATED OTHERWISE.
2. ALL SEWER PIPE SHALL BE PVC (SDR-35).
3. SLOPES SHOWN ON THE PROFILES ARE BASED ON TRUE DISTANCES.
4. SEWER SERVICE LATERALS SHALL BE PROVIDED WITH ELECTRONIC MARKER DISCS (EMD) AS PER CITY OF ALBUQUERQUE STANDARD DRAWING 2125. EMD SHALL BE PROVIDED IN ACCORDANCE WITH THE STANDARD SPECIFICATION.
5. THE CONTRACTOR SHALL BE RESPONSIBLE FOR SELECTING APPROPRIATE MEANS AND METHODS TO EXCAVATE AND TRENCH AND INSTALL PIPE SO AS TO NOT EXCEED RIGHT-OF-WAY OR EASEMENT LIMITS, AND SO AS NOT TO INTERFERE WITH OTHER UTILITIES. THIS SHALL BE CONSIDERED INCIDENTAL TO TRENCHING, THEREFORE, NO SEPARATE PAYMENT WILL BE MADE.
6. THE CONTRACTOR SHALL BE RESPONSIBLE FOR PROTECTING, SUPPORTING AND REPLACING, IF DAMAGED, ALL OTHER UTILITIES ENCOUNTERED DURING CONSTRUCTION. THIS SHALL BE CONSIDERED INCIDENTAL TO TRENCHING, THEREFORE, NO SEPARATE PAYMENT WILL BE MADE.
7. WHERE WATER AND SANITARY SEWER LINES CROSS, THE SANITARY SEWER LINE SHALL BE INSTALLED AS PRESSURE PIPE BETWEEN MANHOLES IF 18 INCHES OF VERTICAL SEPARATION DOES NOT EXIST.
8. ALL SANITARY SEWER MANHOLES SHALL BE 4' DIAMETER TYPE "C" MANHOLES PER C.O.A. STD. DWG. 2101 UNLESS OTHERWISE NOTED.

AS BUILT INFORMATION

CONTRACTOR WORK STAKED BY	CCM	DATE 11-08-04 2004
INSPECTOR'S NOTES BY	JMA POST CONSTRUCT	DATE 10/04
FIELD VERIFICATION BY	JG	DATE 12/04
DRAWINGS CORRECTED BY	JMA	DATE 1/05

MICRO-FILM INFORMATION

RECORDED BY	DATE
NO.	

SURVEY INFORMATION

FIELD NOTES

NO.	BY	DATE
20502	JMA	03/03

BENCH MARKS

PROJECT BENCHMARK– ACS STATION "HEAVEN" (TIED TO PASEO DEL NORTE ROAD–WAY CONSTRUCTION IN 1999) PREVIOUS ELEVATION = 5378.79 FEET (NGVD 1929). THIS BENCHMARK HAS BEEN USED TO PROVIDE UNIFORMITY BETWEEN THIS SURVEY AND THE PREVIOUS SURVEYS CONDUCTED FOR RELATED NORTH DOMINGO BACA ARROYO PROJECTS. THE ELEVATION FOR ACS STATION "5-C20", AN ACS 1 3/4" ALUMINUM DISK STAMPED "ACS BM, 5-C20", EPOXIED TO THE TOP OF THE CONCRETE DROP INLET, AT THE NNE CURB RETURN IN THE NORTHEAST QUADRANT OF THE INTER–SECTION OF VENTURA STREET AND ANAHEIM AVENUE N.E., BASED UPON THIS DATUM IS 5552.84 FEET (NGVD 1929). THE C.O.A. PUBLISHED ELEV. IS 5552.71 (NGVD 1929)

ENGINEER'S SEAL

JAMES ALBERT MEANS NEW MEXICO 13679 LICENSED PROFESSIONAL ENGINEER

10/12/04

NO.	DATE	REMARKS	BY
1	10/04	RECORD DRAWING	JMA

Revisions

DESIGN		
Designed By	G.M.	Date 03-2004
Drawn By	R.R.W.	Date 03-2004
Checked By	G.M.	Date 04-2004

2002.050.K8

CITY OF ALBUQUERQUE
PUBLIC WORKS DEPARTMENT
ENGINEERING DEVELOPMENT GROUP

TITLE:
OCOTILLO SUBDIVISION
WATER AND SANITARY SEWER IMPROVEMENTS PLAN AND PROFILE
SAND VERBENA TRAIL N.E. STA 18+50 TO STA 25+67.01

Design Review Committee	City Engineer Approval	Last Design Update	Mo./Day/Yr.	Mo./Day/Yr.
MAY 27 2004	JUN 4 2004 CITY ENGINEER			

City Project No.	Zone Map No.	Sheet	Of
729181	C-21	22	25

File Path: E:\WWWORK\20050A\
File Name: 20504G7.DWG
Plot Date: 04-20-2004
Plot Time: 4:36 pm

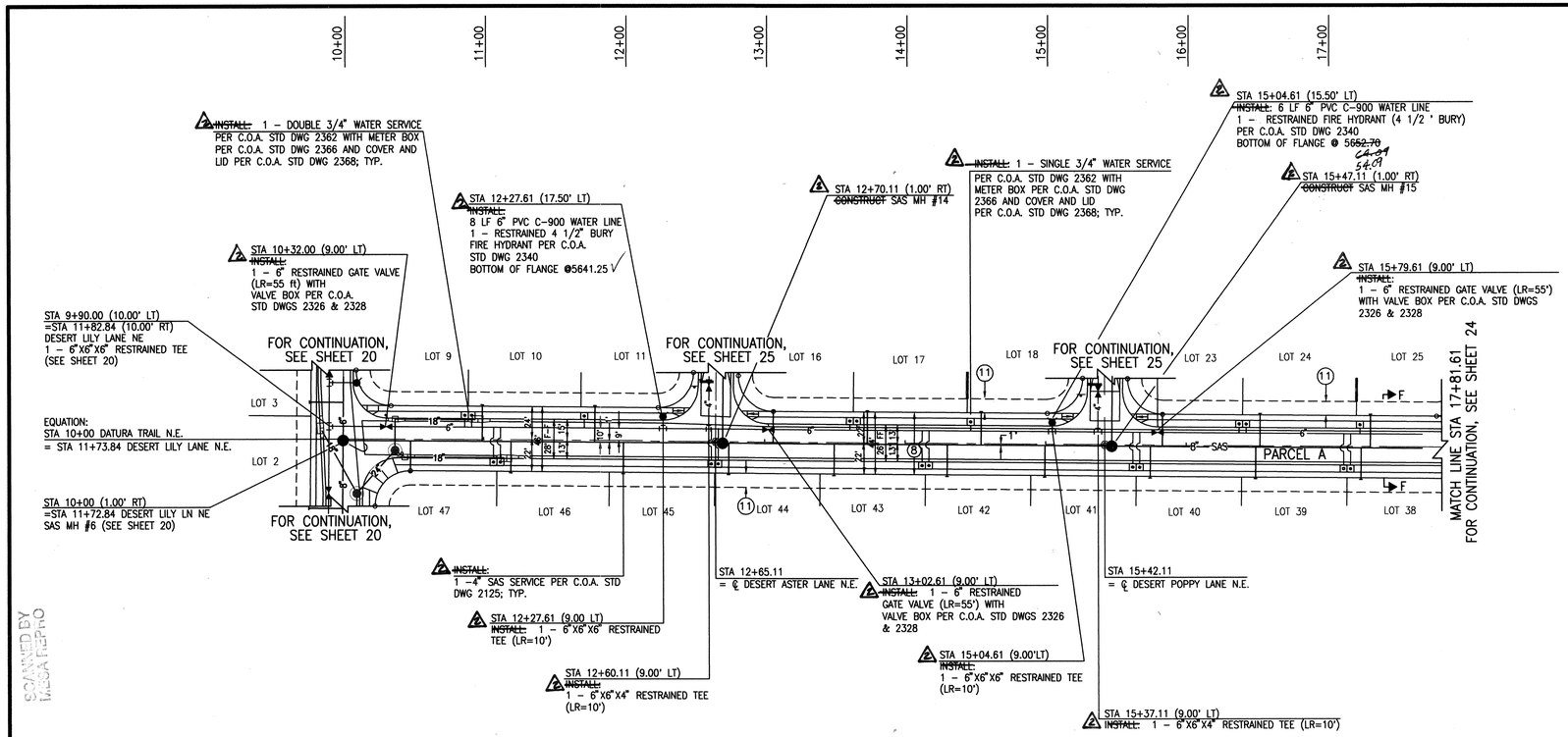

WATER SERVICE SCHEDULE				
LOT(S)	SIZE	TYPE	STA	COVER/LID DWG
9/10	3/4"	DOUBLE	10+89.00	STD/2368
47/46	3/4"	DOUBLE	11+09.53	STD/2368
11	3/4"	SINGLE	11+71.11	STD/2368
45/44	3/4"	DOUBLE	12+64.53	STD/2368
16/17	3/4"	DOUBLE	13+63.11	STD/2368
43/42	3/4"	DOUBLE	14+14.53	STD/2368
18	3/4"	SINGLE	14+46.11	STD/2368
41/40	3/4"	DOUBLE	15+64.53	STD/2368
23/24	3/4"	DOUBLE	16+43.11	STD/2368
39/38	3/4"	DOUBLE	17+14.53	STD/2368
25	3/4"	SINGLE	17+23.11	STD/2368

SANITARY SEWER SERVICE SCHEDULE			
LOT	SIZE	STA	INV @ ℄
47	4"	10+48.00	5628.70
10	4"	10+99.00	5629.50
46	4"	11+19.53	5632.00
11	4"	11+79.11	5633.00
45	4"	11+99.53	5635.00
44	4"	12+74.53	5638.20
16	4"	13+06.11	5638.10
43	4"	13+49.53	5641.50
17	4"	13+73.11	5640.90
42	4"	14+30.04	5644.70
18	4"	14+54.11	5644.20
41	4"	14+99.53	5647.60
40	4"	15+74.53	5650.60
23	4"	15+83.11	5649.60
39	4"	16+49.53	5654.00
24	4"	16+52.61	5652.40
38	4"	17+24.53	5657.00
25	4"	17+31.11	5655.70

WATER LINE CONSTRUCTION NOTES:

1. ALL STATIONING IS BASED ON STREET CENTERLINE UNLESS INDICATED OTHERWISE.
2. FOR ALL LINES 12" AND SMALLER, WATER MAIN SHALL BE PVC C-900 PIPE OR AS APPROVED BY THE CITY OF ALBUQUERQUE CITY ENGINEER. DUCTILE IRON IS AN ACCEPTABLE PIPE MATERIAL IN LIEU OF PVC.
3. FOR ALL LINES 14" AND LARGER, WATER MAIN SHALL BE DUCTILE IRON OR PVC C-905 OR AS APPROVED BY THE CITY OF ALBUQUERQUE CITY ENGINEER. CONCRETE CYLINDER IS AN ACCEPTABLE PIPE MATERIAL IN LIEU OF DUCTILE IRON.
4. WATER LINE SHALL HAVE A MINIMUM COVER OF 3'-0" (FINISHED GRADE TO TOP OF PIPE). EXTRA DEPTH TRENCHING, IF REQUIRED, SHALL BE CONSIDERED INCIDENTAL TO CONSTRUCTION, THEREFORE, NO SEPARATE PAYMENT WILL BE MADE.
5. ELECTRONIC MARKER DISCS (EMD) SHALL BE INSTALLED IN ACCORDANCE WITH THE STANDARD SPECIFICATION.
6. IN ACCORDANCE WITH SECTION 801 OF THE "STANDARD SPECIFICATIONS", METALIZED DETECTABLE WARNING TAPE SHALL BE INSTALLED 18" ABOVE ALL PVC PIPE INSTALLED ON THIS PROJECT.
7. VALVE STEM AND FIRE HYDRANT EXTENSIONS SHALL BE PROVIDED IN ACCORDANCE WITH THE STANDARD SPECIFICATIONS. THE COST OF EACH EXTENSION SHALL BE CONSIDERED INCIDENTAL TO CONSTRUCTION THEREFORE NO SEPARATE PAYMENT WILL BE MADE.
8. JOINT RESTRAINT SHALL BE PROVIDED ON ALL JOINTS OF FIRE HYDRANT LEGS FROM TEE TO FIRE HYDRANT INCLUDING THE TEE AND FIRE HYDRANT.
9. FOR THE PURPOSES OF THIS PROJECT, ALL RESTRAINED JOINTS AND JOINT RESTRAINT SHALL BE MECHANICALLY RESTRAINED. JOINT RESTRAINT LENGTHS SPECIFIED HEREON ARE THE LENGTHS TO BE RESTRAINED EACH SIDE OF THE FITTING.
10. THE CONTRACTOR SHALL BE RESPONSIBLE FOR SELECTING APPROPRIATE MEANS AND METHODS TO EXCAVATE AND TRENCH AND INSTALL PIPE SO AS TO NOT EXCEED RIGHT-OF-WAY OR EASEMENT LIMITS, AND SO AS NOT TO INTERFERE WITH OTHER UTILITIES. THIS SHALL BE CONSIDERED INCIDENTAL TO TRENCHING, THEREFORE, NO SEPARATE PAYMENT WILL BE MADE.
11. THE CONTRACTOR SHALL BE RESPONSIBLE FOR PROTECTING, SUPPORTING AND REPLACING, IF DAMAGED, ALL OTHER UTILITIES ENCOUNTERED DURING CONSTRUCTION. THIS SHALL BE CONSIDERED INCIDENTAL TO TRENCHING, THEREFORE, NO SEPARATE PAYMENT WILL BE MADE.
12. WHERE WATER AND SANITARY SEWER LINES CROSS, THE SANITARY SEWER LINE SHALL BE INSTALLED AS PRESSURE PIPE BETWEEN MANHOLES IF 18 INCHES OF VERTICAL SEPARATION DOES NOT EXIST.
13. ALL FIRE HYDRANTS SHALL BE SECURELY WRAPPED IN BLACK PLASTIC UNTIL SUCH TIME AS THE NEW WATER LINE IS PUT INTO SERVICE BY WATER SYSTEM DIVISION PERSONNEL.

SANITARY SEWER CONSTRUCTION NOTES:

1. ALL STATIONING IS BASED ON STREET CENTERLINE UNLESS INDICATED OTHERWISE.
2. ALL SEWER PIPE SHALL BE PVC (SDR-35).
3. SLOPES SHOWN ON THE PROFILES ARE BASED ON TRUE DISTANCES.
4. SEWER SERVICE LATERALS SHALL BE PROVIDED WITH ELECTRONIC MARKER DISCS (EMD) AS PER CITY OF ALBUQUERQUE STANDARD DRAWING 2125. EMD SHALL BE PROVIDED IN ACCORDANCE WITH THE STANDARD SPECIFICATION.
5. THE CONTRACTOR SHALL BE RESPONSIBLE FOR SELECTING APPROPRIATE MEANS AND METHODS TO EXCAVATE AND TRENCH AND INSTALL PIPE SO AS TO NOT EXCEED RIGHT-OF-WAY OR EASEMENT LIMITS, AND SO AS NOT TO INTERFERE WITH OTHER UTILITIES. THIS SHALL BE CONSIDERED INCIDENTAL TO TRENCHING, THEREFORE, NO SEPARATE PAYMENT WILL BE MADE.
6. THE CONTRACTOR SHALL BE RESPONSIBLE FOR PROTECTING, SUPPORTING AND REPLACING, IF DAMAGED, ALL OTHER UTILITIES ENCOUNTERED DURING CONSTRUCTION. THIS SHALL BE CONSIDERED INCIDENTAL TO TRENCHING, THEREFORE, NO SEPARATE PAYMENT WILL BE MADE.
7. WHERE WATER AND SANITARY SEWER LINES CROSS, THE SANITARY SEWER LINE SHALL BE INSTALLED AS PRESSURE PIPE BETWEEN MANHOLES IF 18 INCHES OF VERTICAL SEPARATION DOES NOT EXIST.
8. ALL SANITARY SEWER MANHOLES SHALL BE 4' DIAMETER TYPE "C" MANHOLES PER C.O.A. STD. DWG. 2101 UNLESS OTHERWISE NOTED.

SCALE:
HORIZONTAL: 1" = 50'
VERTICAL: 1" = 10'

DATURA TRAIL N.E.

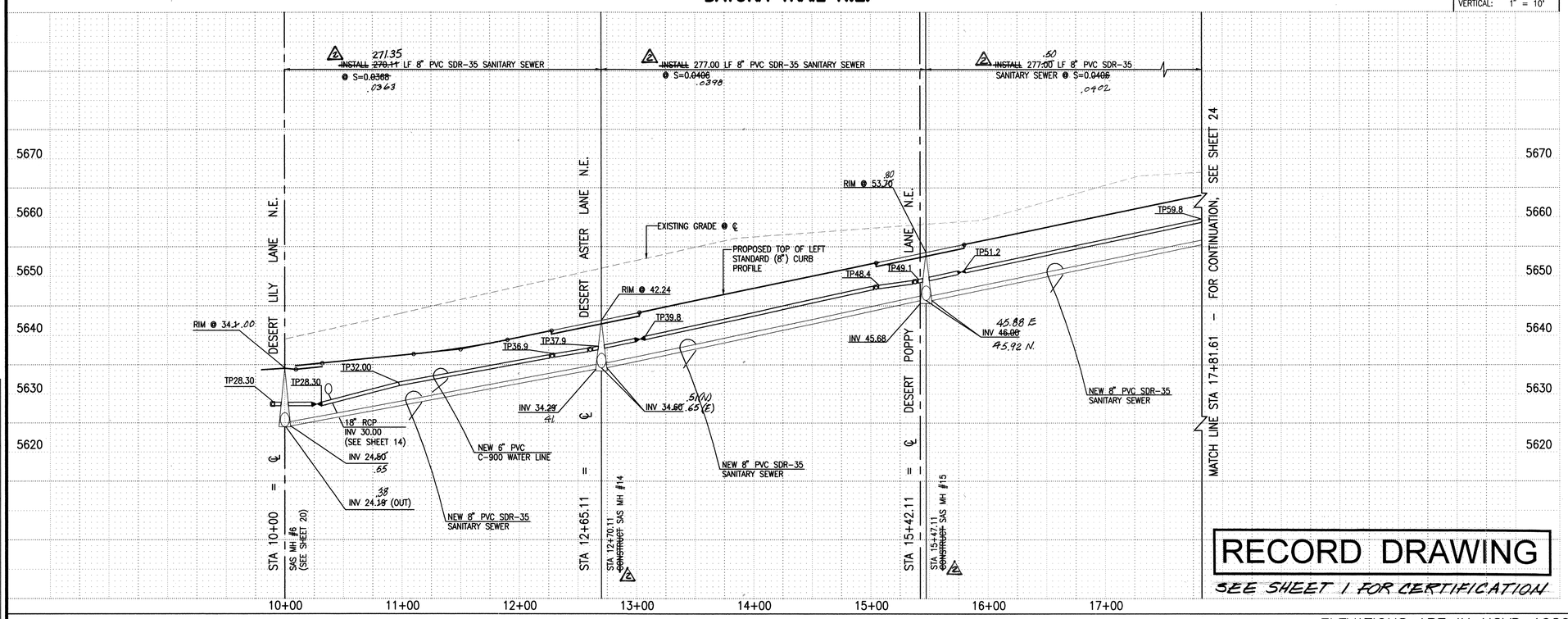

RECORD DRAWING

SEE SHEET 1 FOR CERTIFICATION

ELEVATIONS ARE IN NGVD 1929

SCANNED BY IMSA FIEPRO

File Path: E:\MAK\KOA\2002\KA\ Plot Date: 04-20-2004
File Name: 2050415.DWG Plot Time: 4:40 pm

SURVEY INFORMATION

FIELD NOTES		
NO.	BY	DATE
20502	JMA	03/03

PROJECT BENCHMARK– ACS STATION "HEAVEN" (TIED TO PASEO DEL NORTE ROAD-WAY CONSTRUCTION IN 1999) PREVIOUS ELEVATION = 5378.79 FEET (NGVD 1929). THIS BENCHMARK HAS BEEN USED TO PROVIDE UNIFORMITY BETWEEN THIS SURVEY AND THE PREVIOUS SURVEYS CONDUCTED FOR RELATED NORTH DOMINGO BACA ARROYO PROJECTS. THE ELEVATION FOR ACS STATION "5-C20", AN ACS 1 3/4" ALUMINUM DISK STAMPED "ACS BM, 5-C20", EPOXIED TO THE TOP OF THE CONCRETE DROP INLET, AT THE NNE CURB RETURN IN THE NORTHEAST QUADRANT OF THE INTER-SECTION OF VENTURA STREET AND ANAHEIM AVENUE N.E., BASED UPON THIS DATUM IS 5552.84 FEET (NGVD 1929). THE C.O.A. PUBLISHED ELEV. IS 5552.71 (NGVD 1929)

BENCH MARKS

AS BUILT INFORMATION

CONTRACTOR WORK STAKED BY	CCM	DATE 2-04
INSPECTOR'S ACCEPTANCE BY	JMA / KOA	DATE 10/04
FIELD VERIFICATION BY	JG	DATE 12/04
DRAWINGS CORRECTED BY	JMA	DATE 4/05

MICRO-FILM INFORMATION

RECORDED BY DATE
NO. DATE

ENGINEER'S SEAL

STATE OF NEW MEXICO (3676) REGISTERED PROFESSIONAL ENGINEER GABRIEL MENDEZ JR.
04/21/2004

RECORD DRAWING

NO.	DATE	REMARKS
1	10/04	Revisions

		BY
Designed By	G.M.	JMA
Drawn By	S.G.H.	
Checked By	G.M.	
Date	02-2004	
Date	02-2004	
Date	04-2004	

JEFF NORTENSEN & ASSOCIATES, INC.
☐ 6010-B MIDWAY PARK BLVD. N.E.
☐ ALBUQUERQUE ☐ NEW MEXICO 87109
☐ ENGINEERS ☐ SURVEYORS (505) 345-4250
☐ FAX: 505 345-4254 ☐ ESTABLISHED 1977

2002.050.K8

CITY OF ALBUQUERQUE
PUBLIC WORKS DEPARTMENT
ENGINEERING DEVELOPMENT GROUP

TITLE: OCOTILLO SUBDIVISION
WATER AND SANITARY SEWER IMPROVEMENTS PLAN AND PROFILE
DATURA TRAIL N.E.

Design Review Committee | City Engineer Approval | Last Design Update | Mo./Day/Yr. | Mo./Day/Yr.

City Project No. 729181 | Zone Map No. C-21 | Sheet 23 Of 25

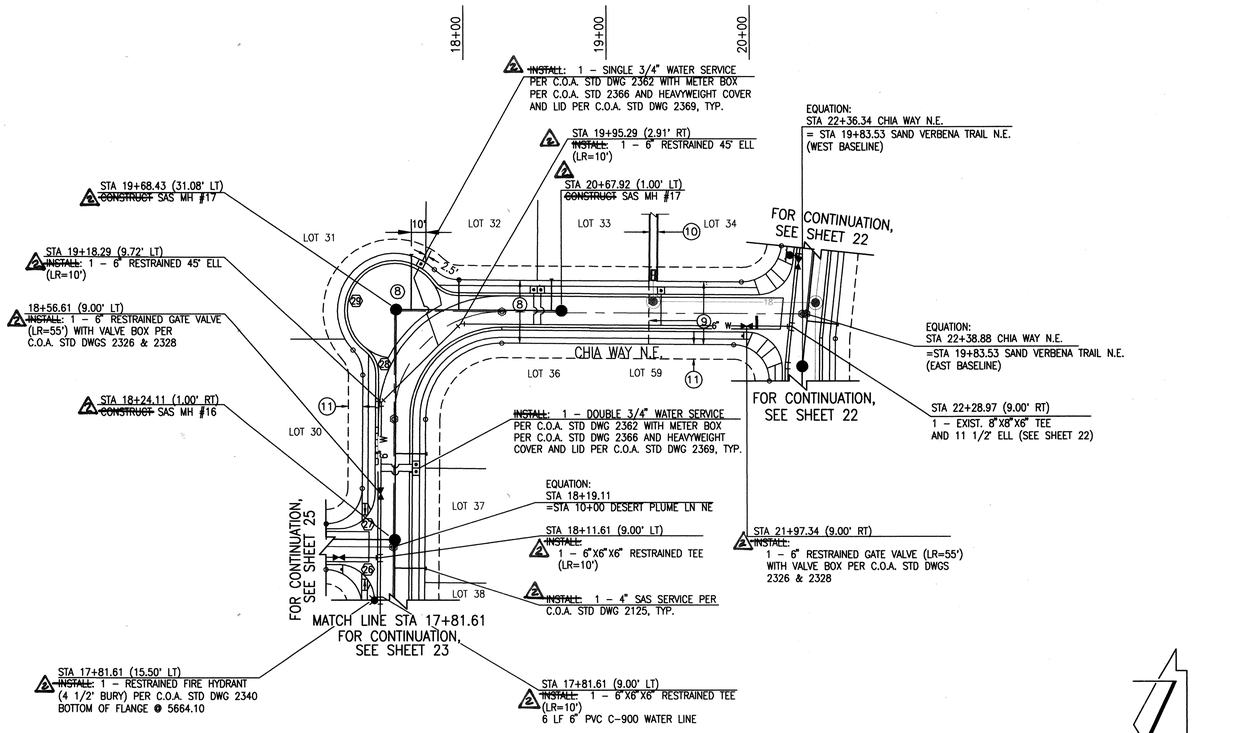

DATURA TRAIL N.E. / CHIA WAY N.E.

SCALE:
HORIZONTAL: 1" = 50'
VERTICAL: 1" = 10'

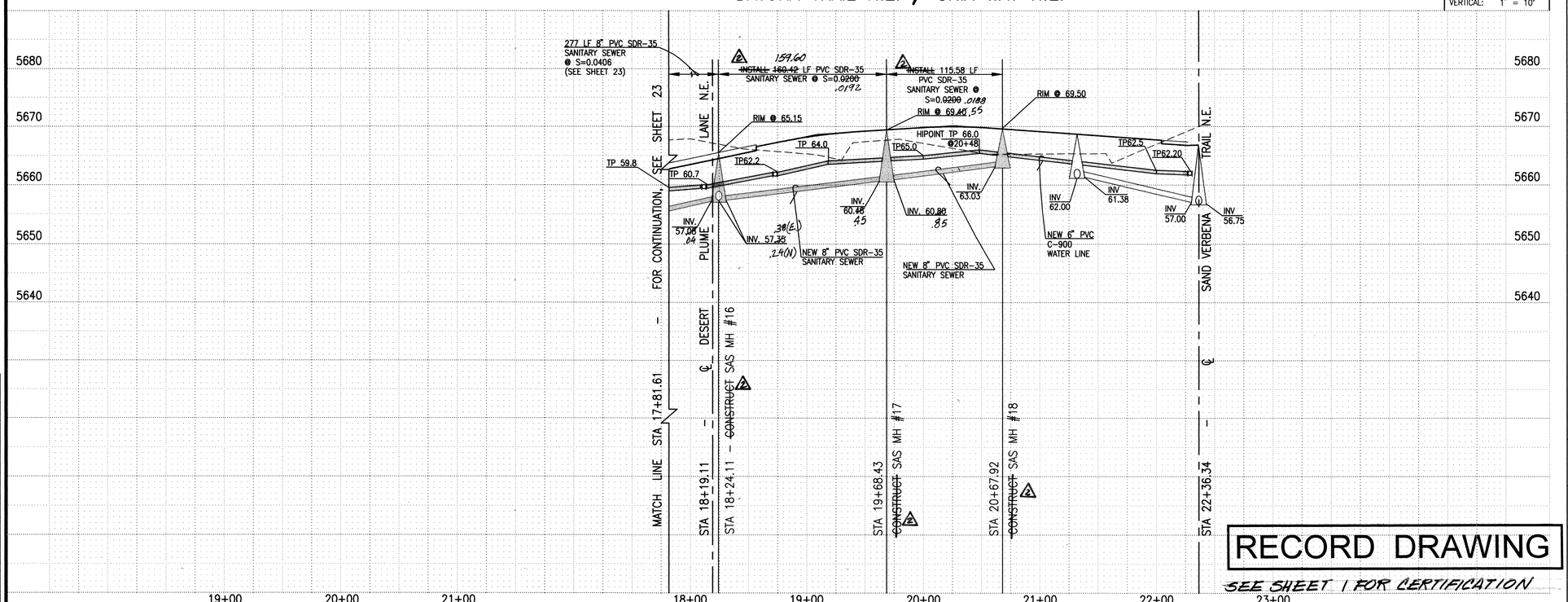

RECORD DRAWING

SEE SHEET 1 FOR CERTIFICATION

ELEVATIONS ARE IN NGVD 1929

WATER LINE CONSTRUCTION NOTES:

1. ALL STATIONING IS BASED ON STREET CENTERLINE UNLESS INDICATED OTHERWISE.
2. FOR ALL LINES 12" AND SMALLER, WATER MAIN SHALL BE PVC C-900 PIPE OR AS APPROVED BY THE CITY OF ALBUQUERQUE CITY ENGINEER. DUCTILE IRON IS AN ACCEPTABLE PIPE MATERIAL IN LIEU OF PVC.
3. FOR ALL LINES 14" AND LARGER, WATER MAIN SHALL BE DUCTILE IRON OR PVC C-905 OR AS APPROVED BY THE CITY OF ALBUQUERQUE CITY ENGINEER. CONCRETE CYLINDER IS AN ACCEPTABLE PIPE MATERIAL IN LIEU OF DUCTILE IRON.
4. WATER LINE SHALL HAVE A MINIMUM COVER OF 3'-0" (FINISHED GRADE TO TOP OF PIPE). EXTRA DEPTH TRENCHING, IF REQUIRED, SHALL BE CONSIDERED INCIDENTAL TO CONSTRUCTION, THEREFORE, NO SEPARATE PAYMENT WILL BE MADE.
5. ELECTRONIC MARKER DISCS (EMD) SHALL BE INSTALLED IN ACCORDANCE WITH THE STANDARD SPECIFICATION.
6. IN ACCORDANCE WITH SECTION 801 OF THE "STANDARD SPECIFICATIONS", METALIZED DETECTABLE WARNING TAPE SHALL BE INSTALLED 18" ABOVE ALL PVC PIPE INSTALLED ON THIS PROJECT.
7. VALVE STEM AND FIRE HYDRANT EXTENSIONS SHALL BE PROVIDED IN ACCORDANCE WITH THE STANDARD SPECIFICATIONS. THE COST OF EACH EXTENSION SHALL BE CONSIDERED INCIDENTAL TO CONSTRUCTION THEREFORE NO SEPARATE PAYMENT WILL BE MADE.
8. JOINT RESTRAINT SHALL BE PROVIDED ON ALL JOINTS OF FIRE HYDRANT LEGS FROM TEE TO FIRE HYDRANT INCLUDING THE TEE AND FIRE HYDRANT.
9. FOR THE PURPOSES OF THIS PROJECT, ALL RESTRAINED JOINTS AND JOINT RESTRAINT SHALL BE MECHANICALLY RESTRAINED. JOINT RESTRAINT LENGTHS SPECIFIED HEREON ARE THE LENGTHS TO BE RESTRAINED EACH SIDE OF THE FITTING.
10. THE CONTRACTOR SHALL BE RESPONSIBLE FOR SELECTING APPROPRIATE MEANS AND METHODS TO EXCAVATE AND TRENCH AND INSTALL PIPE SO AS TO NOT EXCEED RIGHT-OF-WAY OR EASEMENT LIMITS, AND SO AS NOT TO INTERFERE WITH OTHER UTILITIES. THIS SHALL BE CONSIDERED INCIDENTAL TO TRENCHING, THEREFORE, NO SEPARATE PAYMENT WILL BE MADE.
11. THE CONTRACTOR SHALL BE RESPONSIBLE FOR PROTECTING, SUPPORTING AND REPLACING, IF DAMAGED, ALL OTHER UTILITIES ENCOUNTERED DURING CONSTRUCTION. THIS SHALL BE CONSIDERED INCIDENTAL TO TRENCHING, THEREFORE, NO SEPARATE PAYMENT WILL BE MADE.
12. WHERE WATER AND SANITARY SEWER LINES CROSS, THE SANITARY SEWER LINE SHALL BE INSTALLED AS PRESSURE PIPE BETWEEN MANHOLES IF 18 INCHES OF VERTICAL SEPARATION DOES NOT EXIST.
13. ALL FIRE HYDRANTS SHALL BE SECURELY WRAPPED IN BLACK PLASTIC UNTIL SUCH TIME AS THE NEW WATER LINE IS PUT INTO SERVICE BY WATER SYSTEM DIVISION PERSONNEL.

SANITARY SEWER CONSTRUCTION NOTES:

1. ALL STATIONING IS BASED ON STREET CENTERLINE UNLESS INDICATED OTHERWISE.
2. ALL SEWER PIPE SHALL BE PVC (SDR-35).
3. SLOPES SHOWN ON THE PROFILES ARE BASED ON TRUE DISTANCES.
4. SEWER SERVICE LATERALS SHALL BE PROVIDED WITH ELECTRONIC MARKER DISCS (EMD) AS PER CITY OF ALBUQUERQUE STANDARD DRAWING 2125. EMD SHALL BE PROVIDED IN ACCORDANCE WITH THE STANDARD SPECIFICATION.
5. THE CONTRACTOR SHALL BE RESPONSIBLE FOR SELECTING APPROPRIATE MEANS AND METHODS TO EXCAVATE AND TRENCH AND INSTALL PIPE SO AS TO NOT EXCEED RIGHT-OF-WAY OR EASEMENT LIMITS, AND SO AS NOT TO INTERFERE WITH OTHER UTILITIES. THIS SHALL BE CONSIDERED INCIDENTAL TO TRENCHING, THEREFORE, NO SEPARATE PAYMENT WILL BE MADE.
6. THE CONTRACTOR SHALL BE RESPONSIBLE FOR PROTECTING, SUPPORTING AND REPLACING, IF DAMAGED, ALL OTHER UTILITIES ENCOUNTERED DURING CONSTRUCTION. THIS SHALL BE CONSIDERED INCIDENTAL TO TRENCHING, THEREFORE, NO SEPARATE PAYMENT WILL BE MADE.
7. WHERE WATER AND SANITARY SEWER LINES CROSS, THE SANITARY SEWER LINE SHALL BE INSTALLED AS PRESSURE PIPE BETWEEN MANHOLES IF 18 INCHES OF VERTICAL SEPARATION DOES NOT EXIST.
8. ALL SANITARY SEWER MANHOLES SHALL BE 4' DIAMETER TYPE "C" MANHOLES PER C.O.A. STD. DWG. 2101 UNLESS OTHERWISE NOTED.

WATER SERVICE SCHEDULE

LOT(S)	SIZE	TYPE	STA	COVER/LID DWG
37/36	3/4"	DOUBLE	18+74.53	2369 (HEAVY)
31	3/4"	SINGLE	AS SHOWN	2369 (HEAVY)
32/33	3/4"	DOUBLE	20+47.92	2369 (HEAVY)
34	3/4"	SINGLE	21+37.42	2369 (HEAVY)

SANITARY SEWER SERVICE SCHEDULE

LOT	SIZE	STA	INV @ ℄
37	4"	18+04.53	5659.00
36	4"	18+84.53	5663.00
31	4"	AS SHOWN	5665.00
32	4"	20+03.77	5665.00
33	4"	20+60.92	5665.00

jma
2002.050.38

CITY OF ALBUQUERQUE
PUBLIC WORKS DEPARTMENT
ENGINEERING DEVELOPMENT GROUP

TITLE: OCOTILLO SUBDIVISION
WATER AND SANITARY SEWER IMPROVEMENTS PLAN AND PROFILE
DATURA TRAIL N.E / CHIA WAY N.E.

Design Review Committee | City Engineer Approval | Last Design Update | Mo./Day/Yr. | Mo./Day/Yr.

City Project No. 729181 | Zone Map No. C-21 | Sheet 24 Of 25

SURVEY INFORMATION

FIELD NOTES

NO.	BY	DATE
20502	JMA	03/03

BENCH MARKS

PROJECT BENCHMARK – ACS STATION "HEAVEN" (TIED TO PASEO DEL NORTE ROADWAY CONSTRUCTION IN 1999) PREVIOUS ELEVATION = 5378.79 FEET (NGVD 1929). THIS BENCHMARK HAS BEEN USED TO PROVIDE UNIFORMITY BETWEEN THIS SURVEY AND THE PREVIOUS SURVEYS CONDUCTED FOR RELATED NORTH DOMINGO BACA ARROYO PROJECTS. THE ELEVATION FOR ACS STATION "5-C20", AN ACS 1 3/4" ALUMINUM DISK STAMPED "ACS BM, 5-C20", EPOXIED TO THE TOP OF THE CONCRETE DROP INLET, AT THE NNE CURB RETURN IN THE NORTHEAST QUADRANT OF THE INTERSECTION OF VENTURA STREET AND ANAHEM AVENUE N.E., BASED UPON THIS DATUM IS 5552.84 FEET (NGVD 1929). THE C.O.A. PUBLISHED ELEV. IS 5552.71 (NGVD 1929)

AS BUILT INFORMATION

		DATE
CONTRACTOR WORK STAKED BY	CGM	JUNE-OCT 2004
INSPECTOR'S ACCEPTANCE BY	JMA	
FIELD VERIFICATION BY	TRUMAN PATTERSON	DATE 10/04
DRAWINGS CORRECTED BY	J.G.	DATE 12/04
MICRO-FILM	JMA	DATE 1/05
INFORMATION RECORDED BY		DATE
NO.		

ENGINEER'S SEAL

JAMES M. GRAEME, MEANS
NEW MEXICO
13679
REGISTERED PROFESSIONAL ENGINEER
04/21/2004

RECORD DRAWING

NO.	DATE	REMARKS	BY
1	10/04	Revisions	JMA

		Date
Designed By	G.M.	03-2004
Drawn By	S.G.H.	03-2004
Checked By	G.M.	04-2004

File Path: E:\MWORK\2002\050\
File Name: 2050406.DWG
Plot Date: 04-20-2004
Plot Time: 4:41 pm

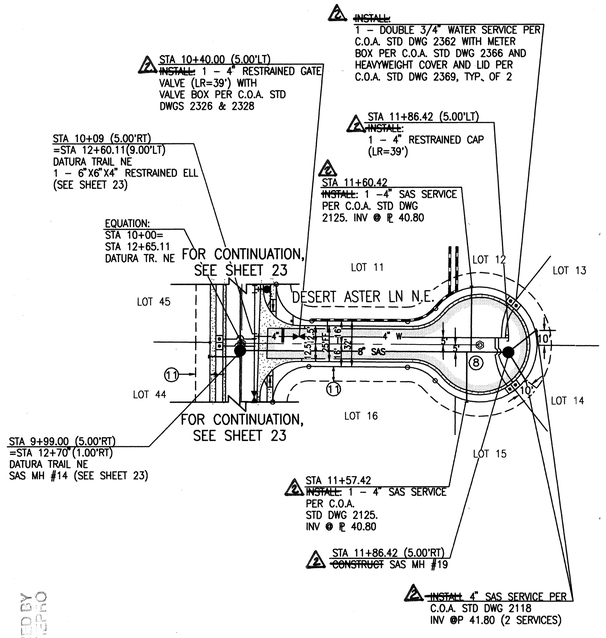

DESERT ASTER LANE N.E.

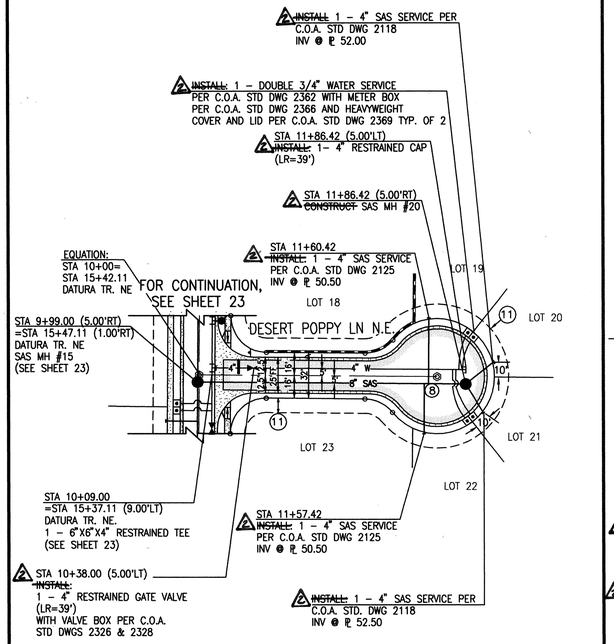

DESERT POPPY LANE N.E.

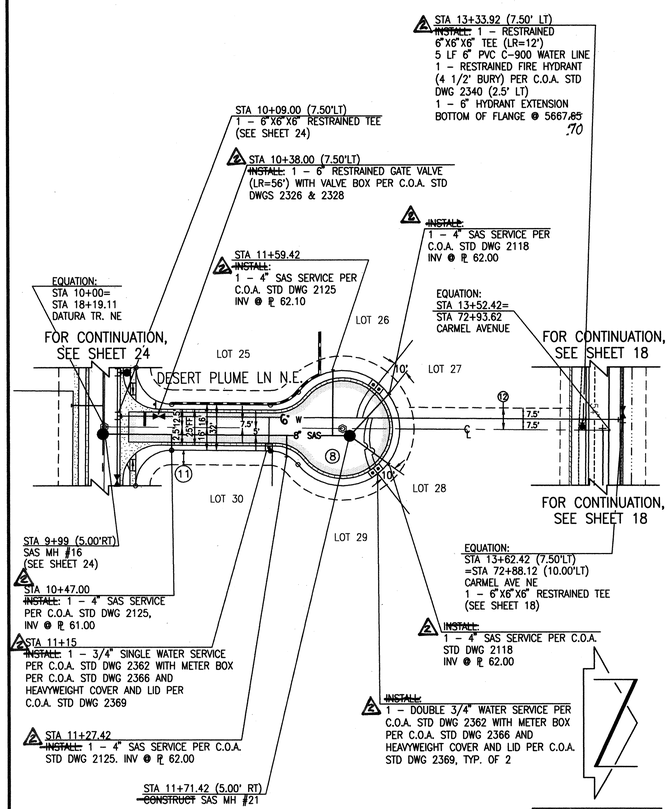

DESERT PLUME LANE N.E.

SCALE:
HORIZONTAL: 1" = 50'
VERTICAL: 1" = 10'

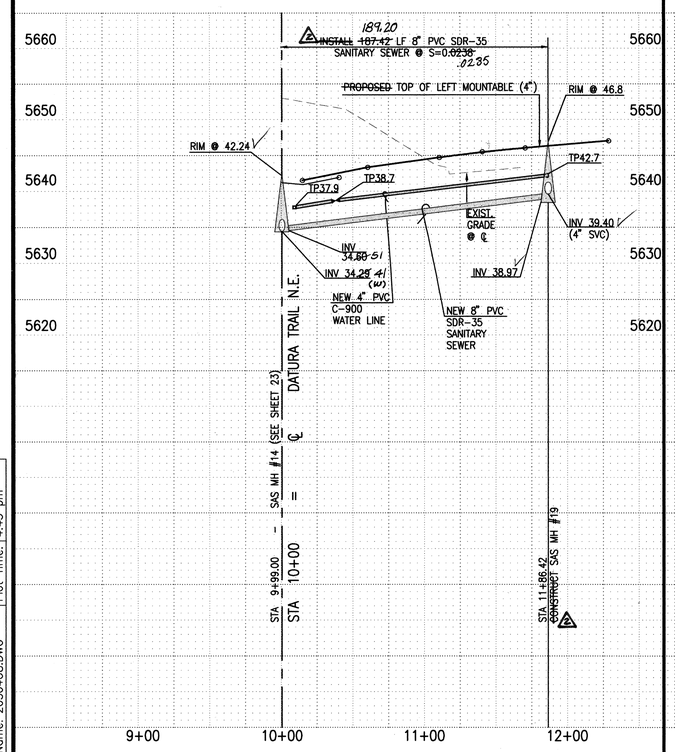

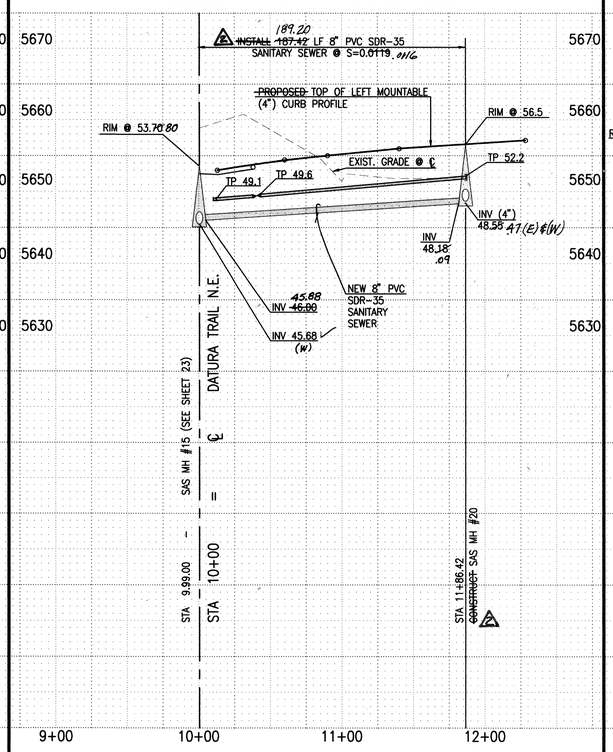

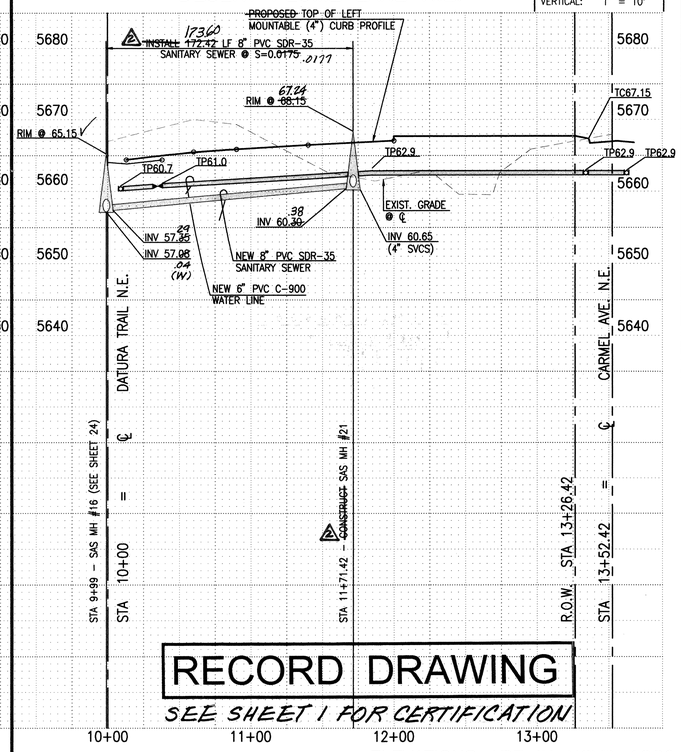

RECORD DRAWING

SEE SHEET 1 FOR CERTIFICATION

ELEVATIONS ARE IN NGVD 1929

WATER LINE CONSTRUCTION NOTES:

1. ALL STATIONING IS BASED ON STREET CENTERLINE UNLESS INDICATED OTHERWISE.
2. FOR ALL LINES 12" AND SMALLER, WATER MAIN SHALL BE PVC C-900 PIPE OR AS APPROVED BY THE CITY OF ALBUQUERQUE CITY ENGINEER. DUCTILE IRON IS AN ACCEPTABLE PIPE MATERIAL IN LIEU OF PVC.
3. FOR ALL LINES 14" AND LARGER, WATER MAIN SHALL BE DUCTILE IRON OR PVC C-905 OR AS APPROVED BY THE CITY OF ALBUQUERQUE CITY ENGINEER. CONCRETE CYLINDER IS AN ACCEPTABLE PIPE MATERIAL IN LIEU OF DUCTILE IRON.
4. WATER LINE SHALL HAVE A MINIMUM COVER OF 3'-0" (FINISHED GRADE TO TOP OF PIPE). EXTRA DEPTH TRENCHING, IF REQUIRED, SHALL BE CONSIDERED INCIDENTAL TO CONSTRUCTION, THEREFORE, NO SEPARATE PAYMENT WILL BE MADE.
5. ELECTRONIC MARKER DISCS (EMD) SHALL BE INSTALLED IN ACCORDANCE WITH THE STANDARD SPECIFICATION.
6. IN ACCORDANCE WITH SECTION 801 OF THE "STANDARD SPECIFICATIONS", METALIZED DETECTABLE WARNING TAPE SHALL BE INSTALLED 18" ABOVE ALL PVC PIPE INSTALLED ON THIS PROJECT.
7. VALVE STEM AND FIRE HYDRANT EXTENSIONS SHALL BE PROVIDED IN ACCORDANCE WITH THE STANDARD SPECIFICATIONS. THE COST OF EACH EXTENSION SHALL BE CONSIDERED INCIDENTAL TO CONSTRUCTION THEREFORE NO SEPARATE PAYMENT WILL BE MADE.
8. JOINT RESTRAINT SHALL BE PROVIDED ON ALL JOINTS OF FIRE HYDRANT LEGS FROM TEE TO FIRE HYDRANT INCLUDING THE TEE AND FIRE HYDRANT.
9. FOR THE PURPOSES OF THIS PROJECT, ALL RESTRAINED JOINTS AND JOINT RESTRAINT SHALL BE MECHANICALLY RESTRAINED. JOINT RESTRAINT LENGTHS SPECIFIED HEREON ARE THE LENGTHS TO BE RESTRAINED EACH SIDE OF THE FITTING.
10. THE CONTRACTOR SHALL BE RESPONSIBLE FOR SELECTING APPROPRIATE MEANS AND METHODS TO EXCAVATE AND TRENCH AND INSTALL PIPE SO AS TO NOT EXCEED RIGHT-OF-WAY OR EASEMENT LIMITS, AND SO AS NOT TO INTERFERE WITH OTHER UTILITIES. THIS SHALL BE CONSIDERED INCIDENTAL TO TRENCHING, THEREFORE, NO SEPARATE PAYMENT WILL BE MADE.
11. THE CONTRACTOR SHALL BE RESPONSIBLE FOR PROTECTING, SUPPORTING AND REPLACING, IF DAMAGED, ALL OTHER UTILITIES ENCOUNTERED DURING CONSTRUCTION. THIS SHALL BE CONSIDERED INCIDENTAL TO TRENCHING, THEREFORE, NO SEPARATE PAYMENT WILL BE MADE.
12. WHERE WATER AND SANITARY SEWER LINES CROSS, THE SANITARY SEWER LINE SHALL BE INSTALLED AS PRESSURE PIPE BETWEEN MANHOLES IF 18 INCHES OF VERTICAL SEPARATION DOES NOT EXIST.
13. ALL FIRE HYDRANTS SHALL BE SECURELY WRAPPED IN BLACK PLASTIC UNTIL SUCH TIME AS THE NEW WATER LINE IS PUT INTO SERVICE BY WATER SYSTEM DIVISION PERSONNEL.

SANITARY SEWER CONSTRUCTION NOTES:

1. ALL STATIONING IS BASED ON STREET CENTERLINE UNLESS INDICATED OTHERWISE.
2. ALL SEWER PIPE SHALL BE PVC (SDR-35).
3. SLOPES SHOWN ON THE PROFILES ARE BASED ON TRUE DISTANCES.
4. SEWER SERVICE LATERALS SHALL BE PROVIDED WITH ELECTRONIC MARKER DISCS (EMD) AS PER CITY OF ALBUQUERQUE STANDARD DRAWING 2125. EMD SHALL BE PROVIDED IN ACCORDANCE WITH THE STANDARD SPECIFICATION.
5. THE CONTRACTOR SHALL BE RESPONSIBLE FOR SELECTING APPROPRIATE MEANS AND METHODS TO EXCAVATE AND TRENCH AND INSTALL PIPE SO AS TO NOT EXCEED RIGHT-OF-WAY OR EASEMENT LIMITS, AND SO AS NOT TO INTERFERE WITH OTHER UTILITIES. THIS SHALL BE CONSIDERED INCIDENTAL TO TRENCHING, THEREFORE, NO SEPARATE PAYMENT WILL BE MADE.
6. THE CONTRACTOR SHALL BE RESPONSIBLE FOR PROTECTING, SUPPORTING AND REPLACING, IF DAMAGED, ALL OTHER UTILITIES ENCOUNTERED DURING CONSTRUCTION. THIS SHALL BE CONSIDERED INCIDENTAL TO TRENCHING, THEREFORE, NO SEPARATE PAYMENT WILL BE MADE.
7. WHERE WATER AND SANITARY SEWER LINES CROSS, THE SANITARY SEWER LINE SHALL BE INSTALLED AS PRESSURE PIPE BETWEEN MANHOLES IF 18 INCHES OF VERTICAL SEPARATION DOES NOT EXIST.
8. ALL SANITARY SEWER MANHOLES SHALL BE 4' DIAMETER TYPE "C" MANHOLES PER C.O.A. STD. DWG. 2101 UNLESS OTHERWISE NOTED.

2002.050.K8

AS BUILT INFORMATION

CONTRACTOR	CCM	DATE ~~JUNE 29~~ 2004
WORK STAKED BY	JMA	DATE 10/04
INSPECTOR'S ACCEPTANCE BY	ROD LUCERO	DATE 12/04
FIELD INSPECTION BY	JG	DATE 1/05
DRAWINGS CORRECTED BY	JMA	DATE

MICRO-FILM INFORMATION

RECORDED BY
DATE
NO.

BENCH MARKS

PROJECT BENCHMARK– ACS STATION "HEAVEN" (TIED TO PASEO DEL NORTE ROAD WAY CONSTRUCTION IN 1999) PREVIOUS ELEVATION = 5378.79 FEET (NGVD 1929). THIS BENCHMARK HAS BEEN USED TO PROVIDE UNIFORMITY BETWEEN THIS SURVEY AND THE PREVIOUS SURVEYS CONDUCTED FOR RELATED NORTH DOMINGO BACA ARROYO PROJECTS. THE ELEVATION FOR ACS STATION "S-C20", AN ACS 1 3/4" ALUMINUM DISK STAMPED "ACS BM, S-C20", EPOXIED TO THE TOP OF THE CONCRETE DROP INLET, AT THE NNE CURB RETURN IN THE NORTHEAST QUADRANT OF THE INTERSECTION OF VENTURA STREET AND ANAHEIM AVENUE N.E., BASED UPON THIS DATUM IS 5352.84 FEET (NGVD 1929). THE C.O.A. PUBLISHED ELEV. IS 5352.71 (NGVD 1929)

SURVEY INFORMATION

FIELD NOTES

NO.	BY	DATE
20502	JMA	03/03

ENGINEER'S SEAL

GRAEME MEANS ENGINEERING NEW MEXICO (3676) REGISTERED PROFESSIONAL ENGINEER
04/21/2004

JMA

NO.	DATE	REMARKS	BY
		Revisions	
		DESIGN	
		Designed By G.M.	Date 03-2004
		Drawn By S.G.H.	Date 03-2004
		Checked By G.M.	Date 04-2004

RECORD DRAWING

CITY OF ALBUQUERQUE
PUBLIC WORKS DEPARTMENT
ENGINEERING DEVELOPMENT GROUP

TITLE: OCOTILLO SUBDIVISION
WATER AND SANITARY SEWER IMPROVEMENTS PLAN AND PROFILE
DESERT ASTER LN. N.E., DESERT POPPY LN. N.E., DESERT PLUME LN. N.E.

Design Review Committee: MAY 27 2004 — DESIGN REVIEW COMMITTEE
City Engineer Approval: JUN 4 2004 — CITY ENGINEER
Last Design Update: Mo./Day/Yr.
Mo./Day/Yr.

City Project No. 729181 | Zone Map No. C-21 | Sheet 25 Of 25

File Path: E:\MKWORK\2002\K\
File Name: 205041B.DWG
Plot Date: 04-20-2004
Plot Time: 4:43 pm