1 2 3 4 5 6 7 8 9 10 11 12 13 14 15
2 6 - 7 4 9 9 . 8 2 - 2 0 1 5

RECORD DRAWING

CONSTRUCTION PLANS for WEST MESA HIGH SCHOOL PUBLIC AND PRIVATE WATER, SANITARY SEWER AND STORM DRAIN LINE EXTENSIONS AND RELOCATIONS

ALBUQUERQUE, NEW MEXICO

JANUARY, 2015

LEGEND

MATERIALS

- CONCRETE
- RIP-RAP

LINES

- SUBDIVISION BOUNDARY
- PROPERTY LINE (PLAN)
- PROPERTY LINE (SECTION)
- CENTERLINE
- EASEMENT LINE
- MATCH LINE
- SECTION CUT LINE

EARTHWORK

	EXISTING	NEW
CONTOUR LINE	25	25
SPOT ELEVATION		
PROJECT / PHASE BOUNDARY		
FLOWLINE		
DIRECTION OF FLOW		

MISCELLANEOUS UTILITIES

- GAS LINE — G
- UNDERGROUND TELEPHONE — UT
- UNDERGROUND ELECTRICAL — UE
- STORM DRAIN — SD
- STORM DRAIN MANHOLE
- STORM DRAIN INLET

SANITARY SEWER

- SANITARY SEWER LINE — SAS
- SANITARY SEWER MANHOLE
- SAS SERVICE CONNECTIONS
- SAS CAP OR PLUG
- ENCASEMENT

WATER

- WATER LINE — W
- WATER SERVICE CONNECTIONS
- GATE VALVE
- FIRE HYDRANT
- BUTTERFLY VALVE
- REDUCER
- WATER PRESSURE ZONE BOUNDARY

WATER FITTINGS

- CAPS AND PLUGS
- ELBOW
- CROSS
- TEE

MISCELLANEOUS

- CHAINLINK FENCE
- FIELD FENCE
- COMMON YARD WALL
- RETAINING WALL
- POWER OR TELEPHONE POLE

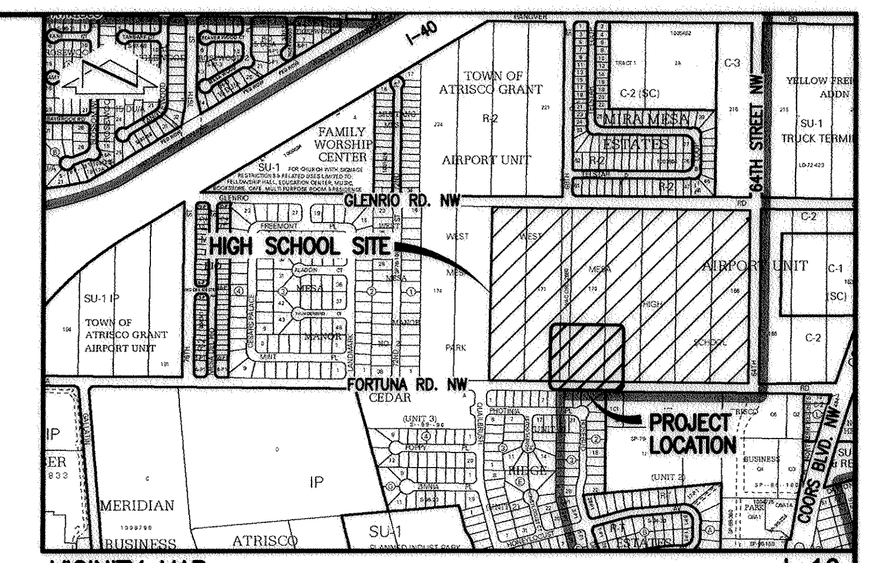

VICINITY MAP

SCALE: 1" = 750'

J-10

GENERAL NOTES:

1. ALL WORK DETAILED ON THESE PLANS TO BE PERFORMED UNDER CONTRACT SHALL, EXCEPT AS OTHERWISE STATED OR PROVIDED FOR HEREON, BE CONSTRUCTED IN ACCORDANCE WITH THE CITY OF ALBUQUERQUE STANDARD SPECIFICATIONS–PUBLIC WORKS CONSTRUCTION–1986–UPDATE NO. 8 INCLUDING AMENDMENT NO. 1.
2. TWO (2) WORKING DAYS PRIOR TO ANY EXCAVATION, CONTRACTOR MUST CONTACT NEW MEXICO ONE CALL SYSTEM, 811, FOR DESIGNATION (LINE–SPOTTING) OF EXISTING PUBLIC UTILITIES AND EXISTING UTILITIES OWNED AND OPERATED BY ALBUQUERQUE PUBLIC SCHOOLS.
3. IF ANY UTILITY LINES, PIPELINES, OR UNDERGROUND UTILITY LINES ARE SHOWN ON THESE DRAWINGS, THEY ARE SHOWN IN AN APPROXIMATE MANNER ONLY, AND SUCH LINES MAY EXIST WHERE NONE ARE SHOWN. IF ANY SUCH EXISTING LINES ARE SHOWN, THE LOCATION IS BASED UPON INFORMATION PROVIDED BY THE OWNER OF SAID UTILITY, AND THE INFORMATION MAY BE INCOMPLETE, OR MAY BE OBSOLETE BY THE TIME CONSTRUCTION COMMENCES. THE ENGINEER HAS CONDUCTED ONLY PRELIMINARY INVESTIGATION OF THE LOCATION, DEPTH, SIZE, OR TYPE OF EXISTING UTILITY LINES, PIPELINES, OR UNDERGROUND UTILITY LINES. THIS INVESTIGATION IS NOT CONCLUSIVE, AND MAY NOT BE COMPLETE, THEREFORE, MAKES NO REPRESENTATION PERTAINING THERETO, AND ASSUMES NO RESPONSIBILITY OR LIABILITY THEREFOR. THE CONTRACTOR SHALL INFORM ITSELF OF THE LOCATION OF ANY UTILITY LINE, PIPELINE, OR UNDERGROUND UTILITY LINE IN OR NEAR THE AREA OF THE WORK IN ADVANCE OF AND DURING EXCAVATION WORK. THE CONTRACTOR IS FULLY RESPONSIBLE FOR ANY AND ALL DAMAGE CAUSED BY ITS FAILURE TO LOCATE, IDENTIFY AND PRESERVE ANY AND ALL EXISTING UTILITIES, PIPELINES, AND UNDERGROUND UTILITY LINES. IN PLANNING AND CONDUCTING EXCAVATION, THE CONTRACTOR SHALL COMPLY WITH STATE STATUTES, MUNICIPAL AND LOCAL ORDINANCES, RULES AND REGULATIONS, IF ANY, PERTAINING TO THE LOCATION OF THESE LINES AND FACILITIES.
4. SHOULD A CONFLICT EXIST BETWEEN THESE PLANS AND ACTUAL FIELD CONDITIONS, THE CONTRACTOR SHALL PROMPTLY NOTIFY THE ENGINEER IN WRITING SO THAT THE CONFLICT CAN BE RESOLVED WITH A MINIMUM AMOUNT OF DELAY FOR ALL PARTIES.
5. THE CONTRACTOR SHALL MAINTAIN ACCESS TO ADJACENT PROPERTIES DURING CONSTRUCTION.
6. ALL WORK ON THIS PROJECT SHALL BE PERFORMED IN ACCORDANCE WITH APPLICABLE FEDERAL, STATE AND LOCAL LAWS, RULES AND REGULATIONS CONCERNING SAFETY AND HEALTH.
7. ALL UTILITIES AND UTILITY SERVICE LINES SHALL BE INSTALLED PRIOR TO PAVING.
8. BACKFILL COMPACTION SHALL BE ACCORDING TO SPECIFIED STREET USE OR PER CITY OF ALBUQUERQUE STANDARD DRAWING 2465, WHICHEVER IS MORE STRINGENT.
9. TACK COAT REQUIREMENTS SHALL BE DETERMINED DURING CONSTRUCTION BY THE PROJECT ENGINEER.
10. SIDEWALKS AND WHEELCHAIR RAMPS WITHIN THE CURB RETURNS SHALL BE CONSTRUCTED WHEREVER A NEW CURB RETURN IS CONSTRUCTED.
11. IF CURB IS DEPRESSED FOR A DRIVEPAD OR A HANDICAP RAMP, THE DRIVEPAD OR RAMP SHALL BE CONSTRUCTED PRIOR TO ACCEPTANCE OF THE CURB AND GUTTER.
12. ALL STORM DRAINAGE FACILITIES SHALL BE COMPLETED PRIOR TO FINAL ACCEPTANCE.
13. THE CONTRACTOR SHALL COORDINATE WITH THE WATER AUTHORITY SEVEN (7) DAYS IN ADVANCE OF PERFORMING WORK THAT WILL AFFECT THE PUBLIC WATER OR SANITARY SEWER INFRASTRUCTURE. WORK REQUIRING SHUTOFF OF FACILITIES DESIGNATED AS MASTER PLAN FACILITIES MUST BE COORDINATED WITH THE WATER AUTHORITY 14 DAYS IN ADVANCE OF PERFORMING SUCH WORK. ONLY WATER AUTHORITY CREWS ARE AUTHORIZED TO OPERATE PUBLIC VALVES. SHUTOFF REQUESTS MUST BE MADE ONLINE AT http://www.abcwua.org/Water_Shut_off_and_Turn_on_Procedures.aspx.
14. CONTRACTOR SHALL NOTIFY THE CITY SURVEYOR NOT LESS THAN SEVEN (7) DAYS PRIOR TO STARTING WORK IN ORDER THAT THE CITY SURVEYOR MAY TAKE NECESSARY MEASURES TO INSURE THE PRESERVATION OF SURVEY MONUMENTS. CONTRACTOR SHALL NOT DISTURB PERMANENT SURVEY MONUMENTS WITHOUT THE CONSENT OF THE CITY SURVEYOR AND SHALL NOTIFY THE CITY SURVEYOR AND BEAR THE EXPENSE OF REPLACING ANY THAT MAY BE DISTURBED WITHOUT PERMISSION. REPLACEMENT SHALL BE DONE ONLY BY THE CITY SURVEYOR. WHEN A CHANGE IS MADE IN THE FINISHED ELEVATION OF THE PAVEMENT OF ANY ROADWAY IN WHICH A PERMANENT SURVEY MONUMENT IS LOCATED, CONTRACTOR SHALL, AT HIS OWN EXPENSE, ADJUST THE MONUMENT COVER TO THE NEW GRADE UNLESS OTHERWISE SPECIFIED. REFER TO SECTION 4.4 OF THE SPECIFICATIONS.
15. SEVEN (7) WORKING DAYS PRIOR TO BEGINNING CONSTRUCTION THE CONTRACTOR SHALL SUBMIT TO THE CONSTRUCTION COORDINATION DIVISION A DETAILED CONSTRUCTION SCHEDULE. TWO (2) WORKING DAYS PRIOR TO CONSTRUCTION THE CONTRACTOR SHALL OBTAIN A BARRICADING PERMIT FROM THE CONSTRUCTION COORDINATION DIVISION. CONTRACTOR SHALL NOTIFY BARRICADE ENGINEER (924–3400) PRIOR TO OCCUPYING AN INTERSECTION. CONTRACTOR MUST REFER TO SECTION 19 OF THE STANDARD SPECIFICATION FOR TRAFFIC CONTROL.
16. ALL STREET STRIPING ALTERED OR DESTROYED SHALL BE REPLACED WITH PLASTIC REFLECTORIZED STRIPING BY CONTRACTOR TO EXISTING LOCATION OR AS INDICATED BY THIS PLAN SET. FINAL STRIPING TO BE REVIEWED BY TRAFFIC OPERATIONS, DMD. COORDINATE REVIEW BY TRAFFIC OPERATIONS THROUGH CONSTRUCTION ENGINEER, DRC/CONSTRUCTION SECTION, CITY OF ALBUQUERQUE PLANNING DEPARTMENT.
17. CAUTION: THESE DRAWINGS DO NOT INCLUDE NECESSARY COMPONENTS FOR CONSTRUCTION SAFETY WHICH SHALL REMAIN THE RESPONSIBILITY OF THE CONTRACTOR. ALL EXCAVATION, TRENCHING AND SHORING ACTIVITIES MUST BE CARRIED–OUT IN ACCORDANCE WITH OSHA 29 CFR 1926, SUBPART P–EXCAVATIONS.
18. ANY WORK OCCURRING WITHIN AN ARTERIAL ROADWAY REQUIRES TWENTY–FOUR HOUR CONSTRUCTION.
19. CONTRACTOR SHALL MAINTAIN A GRAFFITI–FREE WORK SITE. CONTRACTOR SHALL PROMPTLY REMOVE ANY AND ALL GRAFFITI FROM EQUIPMENT, WHETHER PERMANENT OR TEMPORARY.
20. WHEN APPLICABLE, CONTRACTOR SHALL, ON BEHALF OF THE OWNER AND OPERATORS, SECURE "TOPSOIL DISTURBANCE PERMIT" FROM THE CITY AND/OR FILE A NOTICE OF INTENT (N.O.I.) WITH THE EPA PRIOR TO BEGINNING CONSTRUCTION.
21. CONTRACTOR SHALL BE RESPONSIBLE FOR PROVIDING AND MAINTAINING ALL CONSTRUCTION SIGNING UNTIL THE PROJECT HAS BEEN ACCEPTED BY THE CITY OF ALBUQUERQUE.
22. ALL FILL SHALL BE CLEAN, FREE FROM VEGETATION, DEBRIS, AND OTHER DELETERIOUS MATERIALS, AND SHALL NOT BE CONTAMINATED WITH HYDROCARBONS OR OTHER CHEMICAL CONTAMINANTS.

ENGINEER'S RECORD DRAWING CERTIFICATION

I, J. GRAEME MEANS, NMPE 13676, OF THE FIRM HIGH MESA CONSULTING GROUP, HEREBY CERTIFY THAT THE INFRASTRUCTURE CONSTRUCTED AS PART OF THIS PROJECT HAS BEEN INSPECTED BY ME OR PERSONNEL UNDER MY DIRECT SUPERVISION AND, TO THE BEST OF MY KNOWLEDGE AND BELIEF, HAS BEEN CONSTRUCTED IN ACCORDANCE WITH THE PLANS AND SPECIFICATIONS AND THE ORIGINAL DESIGN INTENT OF THE CITY ENGINEER APPROVED PLANS DATED 03–23–2015. THE RECORD INFORMATION EDITED ONTO THIS ORIGINAL DESIGN DOCUMENT IS FROM THE AS–BUILT SURVEY CONDUCTED 08–27–2015, UNDER THE DIRECT SUPERVISION OF CHARLES G. CALA, JR., NMPS 11184, OF THE FIRM HIGH MESA CONSULTING GROUP, AND IS TRUE AND CORRECT TO THE BEST OF MY KNOWLEDGE AND BELIEF. THIS RECORD INFORMATION IS NOT NECESSARILY COMPLETE AND INTENDED ONLY TO VERIFY SUBSTANTIAL COMPLIANCE OF DESIGN INTENT OF THIS PROJECT. THOSE RELYING ON THIS RECORD DOCUMENT ARE ADVISED TO OBTAIN INDEPENDENT VERIFICATION OF ITS ACCURACY BEFORE USING IT FOR ANY OTHER PURPOSE. THIS CERTIFICATION IS SUBMITTED IN SUPPORT OF A REQUEST FOR ACCEPTANCE OF THE PROJECT BY THE CITY OF ALBUQUERQUE

J. GRAEME MEANS
NMPE NO. 13676

J. GRAEME MEANS NEW MEXICO 13676 REGISTERED PROFESSIONAL ENGINEER

9/18/15
DATE

INDEX OF DRAWINGS

SHEET	DESCRIPTION
1	COVER SHEET, VICINITY MAP, GENERAL NOTES, LEGEND AND INDEX OF DRAWINGS
2	OVERALL IMPROVEMENTS PLAN
3	PUBLIC WATER LINE EXTENSION PLAN AND PROFILE STA 6+83.89 TO STA 10+21.13
4	SANITARY SEWER SERVICE PLAN & PROFILE; WATER VALVE SHUTOFF PLAN
5	STORM DRAIN CONNECTION AND EXTENSION PLAN AND PROFILE
6	PRIVATE SANITARY SEWER EXTENSION (NOT PART OF WORK ORDER)
7	PRIVATE WATER AND FIRE LINE EXTENSIONS (NOT PART OF WORK ORDER)
8	PRIVATE SECTIONS AND DETAILS (NOT PART OF WORK ORDER)

APPROVED AS RECORD DRAWINGS
DESIGN REVIEW SECTION
CITY CONSTRUCTION ENGINEER
DATE: 12-16-15

HIGH MESA Consulting Group
6010-B MIDWAY PARK BLVD. NE • ALBUQUERQUE, NEW MEXICO 87109
PHONE: 505.345.4250 • FAX: 505.345.4254 • www.highmesacg.com

2013.187.87

REV.	SHEETS	CITY ENGINEER	DATE	USER DEPARTMENT	DATE	USER DEPARTMENT	DATE
1	7						
2	1-8						

ENGINEERS STAMP & SIGNATURE

J. GRAEME MEANS NEW MEXICO 13676 REGISTERED PROFESSIONAL ENGINEER
01/14/2015
9/18/2015

APPROVALS	ENGINEER	DATE
DRC Chairman		2-12-15
Transportation		1/29/15
Water/Wastewater		1/29/15
Hydrology		1/26/15
C.I.P.		
Const. Mngmt.		
Const. Coord.		

City Project No. 749982

****
APPROVED FOR CONSTRUCTION

3/23/15
City Engineer Date

SHEET 1 OF 8

File Path: P:\DATA\2013.187\ENG\R2\ | Plot Date: 09-18-2015
File Name: 131877_SH1_R2.DWG | Plot Time: 09:58 am

SCANNED BY
PLANNING

RECORD DRAWING
FOR CERTIFICATION, SEE SHEET 1

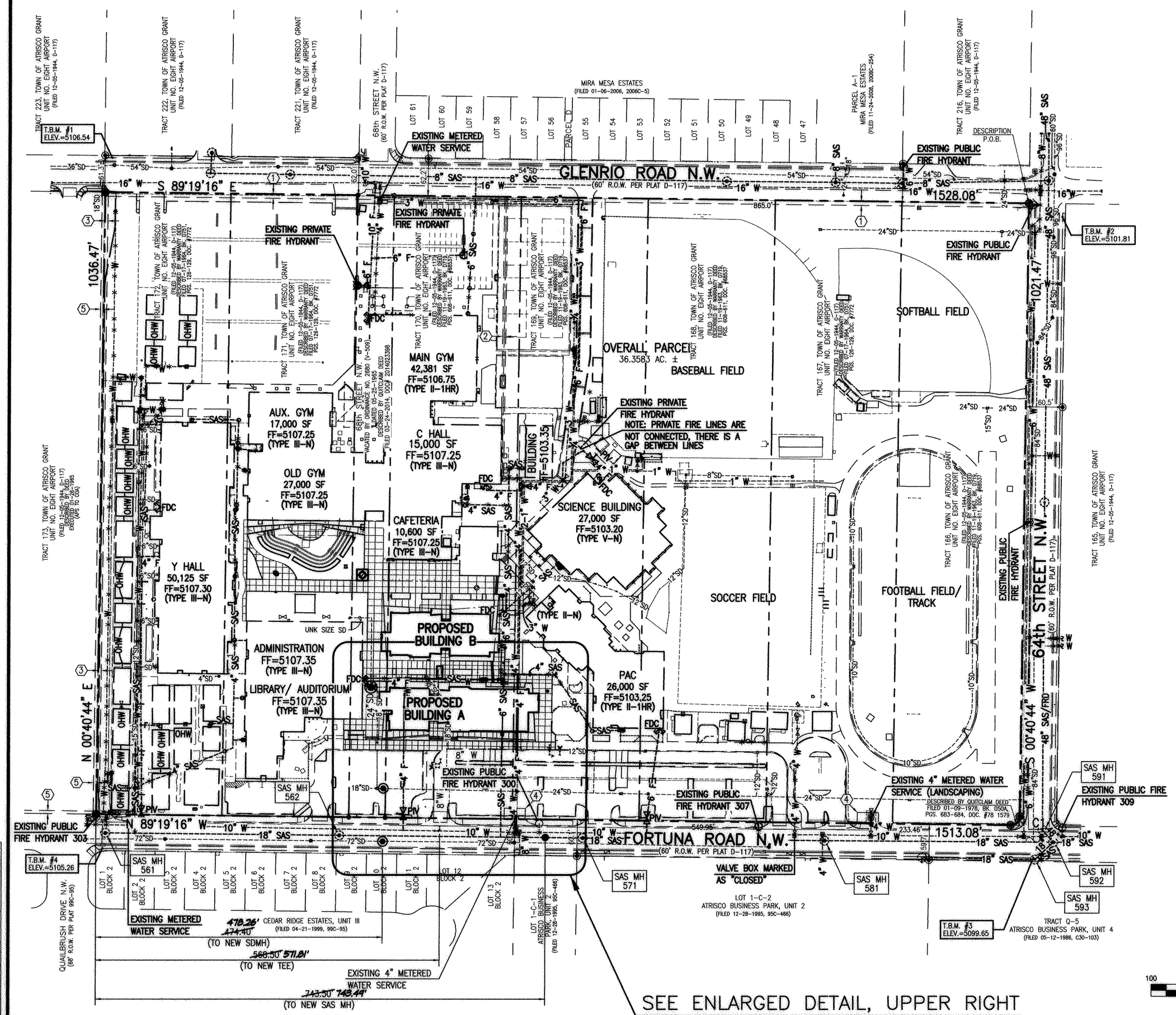

SEE ENLARGED DETAIL, UPPER RIGHT
FOR EXISTING AND PROPOSED
IMPROVEMENTS IN THIS AREA

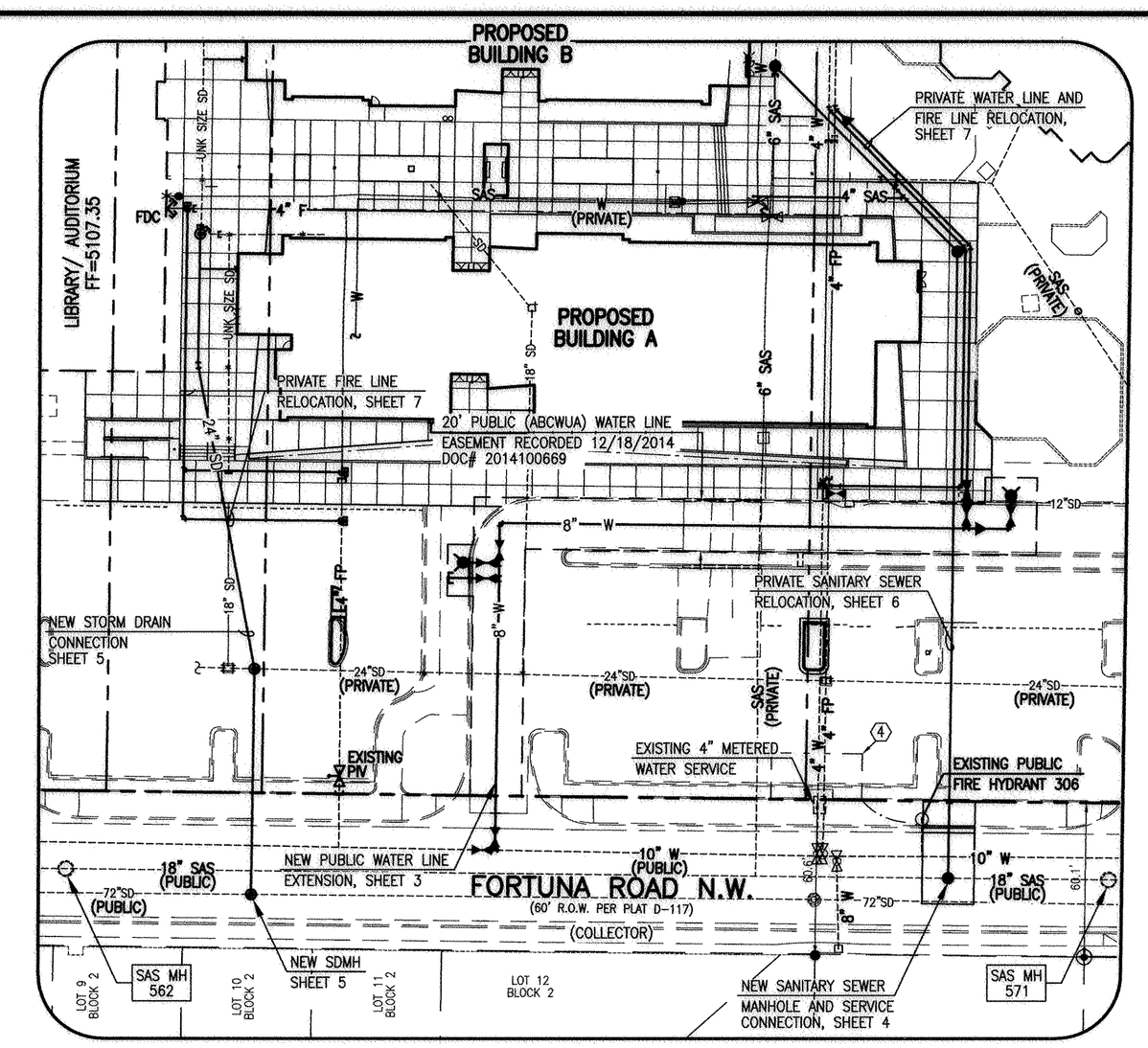

ENLARGED DETAIL

SCALE: 1" = 40'

LEGEND

- EXISTING FIRE HYDRANT
- PROPOSED FIRE HYDRANT
- FIRE DEPARTMENT CONNECTION (FDC)
- EXISTING SANITARY SEWER MANHOLE
- PROPOSED SANITARY SEWER MANHOLE
- EXISTING GATE VALVE
- PROPOSED GATE VALVE
- EXISTING DOUBLE CLEANOUT
- PROPOSED DOUBLE CLEANOUT
- EXISTING SINGLE CLEANOUT
- PROPOSED SINGLE CLEANOUT
- EXISTING WATER SERVICE
- PROPOSED WATER SERVICE
- EXISTING WATER LINE
- PROPOSED WATER LINE
- EXISTING SANITARY SEWER LINE
- PROPOSED SANITARY SEWER LINE
- EXISTING FIRE LINE
- PROPOSED FIRE LINE
- EXISTING POST INDICATOR VALVE (PIV)
- PROPOSED POST INDICATOR VALVE

NOTE:

REFER TO WATER VALVE SHUTOFF PLAN, SHEET 4, FOR EXISTING WATER VALVE NUMBERS

BENCHMARKS

PROJECT BENCHMARK

AN A.G.R.S. BRASS DISK STAMPED "18-J11", SET FLUSH IN THE SIDEWALK. LOCATED IN THE NORTHEAST QUADRANT OF THE INTERSECTION OF COORS ROAD AND GLENRIO ROAD. ELEVATION = 5099.609 FEET (NAVD 1988)

LEGAL DESCRIPTION

TRACTS 166 THROUGH 172, INCLUSIVE, TOWN OF ATRISCO GRANT, AIRPORT UNIT, ALBUQUERQUE, NEW MEXICO.

EXISTING EASEMENTS

1. 7' PNM AND MST&T EASEMENT GRANTED BY DOCUMENT EXECUTED 09-08-1965
2. 5' PNM AND MST&T EASEMENT GRANTED BY DOCUMENT EXECUTED 09-08-1965
3. 5' PNM AND MST&T EASEMENT GRANTED BY DOCUMENT EXECUTED 04-07-1969
4. ABCWUA PUBLIC WATER LINE EASEMENT FOR WATER METERS GRANTED BY DOCUMENT FILED 07-20-2010, DOC. #2010072287
5. 5' PNM AND MST&T EASEMENT DEPICTED BY DOCUMENT EXECUTED 04-07-1969

SCALE: 1" = 100'

100 0 200
50 100

NOTE:
THIS IS NOT A BOUNDARY SURVEY; APPARENT PROPERTY CORNERS ARE SHOWN FOR ORIENTATION ONLY. THE BOUNDARY AND TOPOGRAPHIC INFORMATION DEPICTED HEREON IS BASED UPON THE BOUNDARY, TOPOGRAPHIC AND UTILITY SURVEYS PREPARED BY HIGH MESA CONSULTING GROUP, NMPS NO. 11184, DATED 03/28/2014 (2013.180.3).

File Path: P:\DATA\2013.187.7\DWG\R2\ | Plot Date: 09-18-2015
File Name: 131877_SH2_R2.DWG | Plot Time: 10:02 am

AS BUILT INFORMATION

CONTRACTOR	ALTCR	DATE 09/15
WORK STAKED BY	HMCS	DATE 09/15
INSPECTOR'S ACCEPTANCE BY	HMCS	DATE 09/15
VERIFICATION BY	HMCS	DATE 09/15
DRAWINGS CORRECTED BY	HMCS	DATE 09/15
MICRO-FILM INFORMATION		DATE
RECORDED BY		
NO.		

BENCH MARKS
AN A.G.R.S. BRASS DISK STAMPED "18-J11", SET FLUSH IN THE SIDEWALK. LOCATED IN THE NORTHEAST QUADRANT OF THE INTERSECTION OF COORS ROAD AND GLENRIO ROAD.
ELEVATION = 5099.609 FEET (NAVD 1988)

SURVEY INFORMATION

FIELD NOTES		
NO.	BY	DATE
2013.180.3	HMCG	3/28/14

ENGINEER'S SEAL
JOSHUA L. MEANS NEW MEXICO 15269 REGISTERED PROFESSIONAL ENGINEER
01/14/2015

RLC

REMARKS	BY	
Revisions		
DESIGN		

RECORD DRAWING 09/15

NO.	DATE	REMARKS	BY

Designed By	G.M.	Date	12-2014
Drawn By	J.Y.R./S.C.C.	Date	12-2014
Checked By	G.M.	Date	01-2015

HIGH MESA Consulting Group
6010-B MIDWAY PARK BLVD. NE • ALBUQUERQUE, NEW MEXICO 87109
PHONE: 505.345.4250 • FAX: 505.345.4254 • www.highmesacg.com

CITY OF ALBUQUERQUE
PUBLIC WORKS DEPARTMENT
ENGINEERING DEVELOPMENT GROUP

TITLE: OVERALL IMPROVEMENTS PLAN
PUBLIC AND PRIVATE WATER, SANITARY SEWER
AND STORM DRAIN LINE EXTENSIONS AND RELOCATIONS
WEST MESA HIGH SCHOOL

Design Review Committee: APPROVED FEB 18 2015 DESIGN REVIEW COMMITTEE
City Engineer Approval: APPROVED MAR 23 2015 CITY ENGINEER
Last Design Update | No./Date/Ch. | No./Date/Ch.

City Project No.	Zone Map No.	Sheet	Of
749982	J-10	2	8

2013.187.7

SCANNED BY
PLANNING

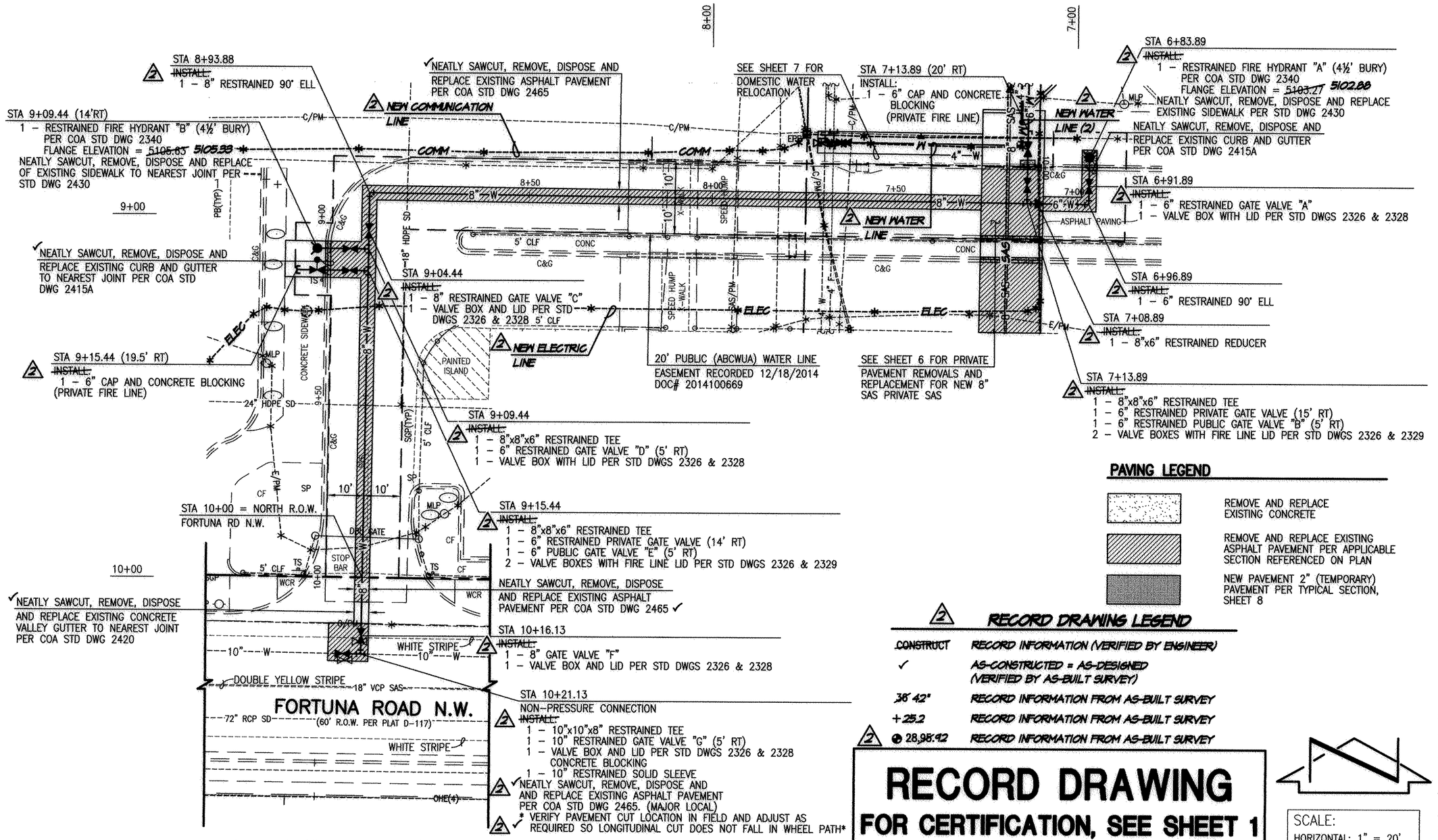

PUBLIC WATER LINE EXTENSION

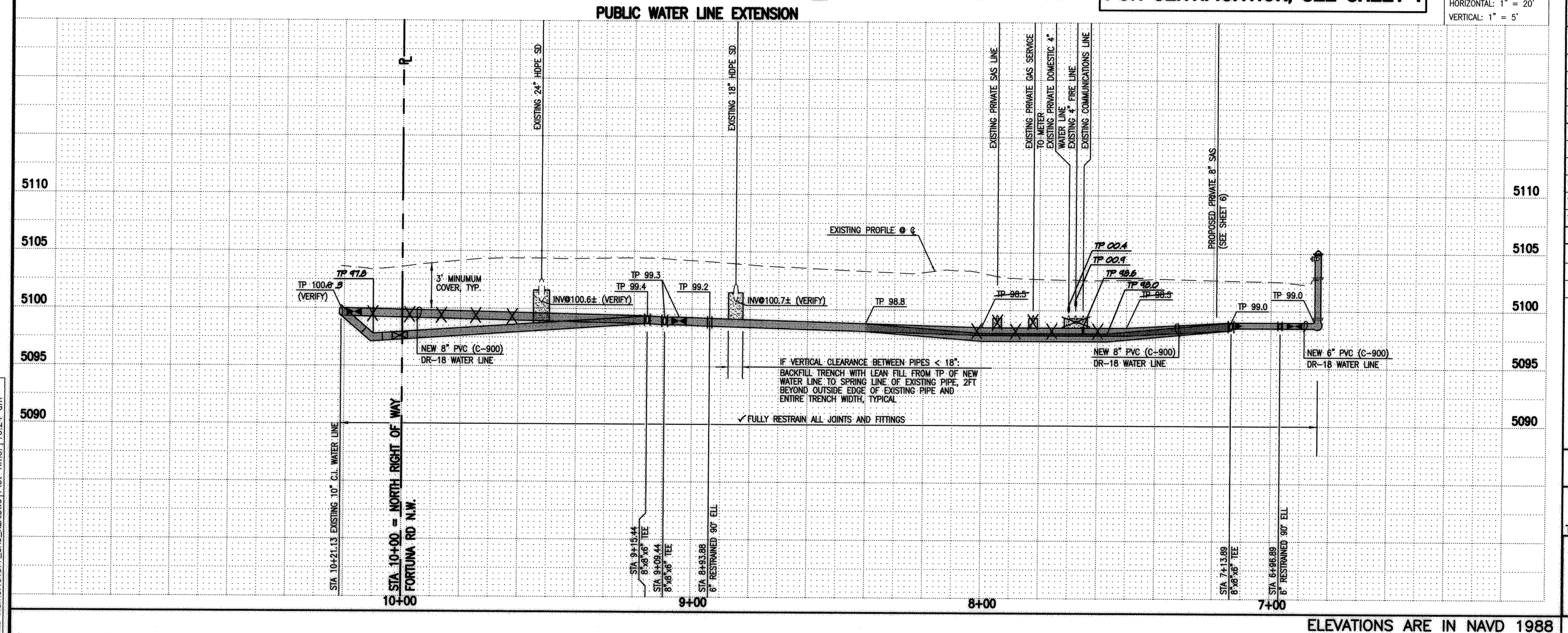

ELEVATIONS ARE IN NAVD 1988

WATER LINE CONSTRUCTION NOTES:

1. ALL STATIONING IS BASED ON EASEMENT CENTERLINE UNLESS INDICATED OTHERWISE.
2. FOR ALL LINES 12" AND SMALLER, WATER MAIN SHALL BE PVC C-900 DR18 PIPE OR AS APPROVED BY THE WATER AUTHORITY. DUCTILE IRON IS AN ACCEPTABLE PIPE MATERIAL IN LIEU OF PVC.
3. FOR ALL LINES LARGER THAN 12", WATER MAIN SHALL BE DUCTILE IRON OR PVC C-905 OR AS APPROVED BY THE WATER AUTHORITY. CONCRETE CYLINDER IS AN ACCEPTABLE PIPE MATERIAL IN LIEU OF DUCTILE IRON.
4. WATER LINE SHALL HAVE A MINIMUM COVER OF 3'-0" (FINISHED GRADE TO TOP OF PIPE) FOR ALL LINES 12" OR SMALLER; 4'-0" MINIMUM COVER FOR LINES 14" OR LARGER. EXTRA DEPTH TRENCHING, IF REQUIRED, SHALL BE CONSIDERED INCIDENTAL TO CONSTRUCTION, THEREFORE, NO SEPARATE PAYMENT WILL BE MADE.
5. ELECTRONIC MARKER DEVICES (EMD) SHALL BE INSTALLED IN ACCORDANCE WITH THE STANDARD SPECIFICATION, SECTION 170.
6. IN ACCORDANCE WITH SECTION 801 OF THE "STANDARD SPECIFICATIONS", METALIZED DETECTABLE WARNING TAPE SHALL BE INSTALLED 18" ABOVE ALL PVC PIPE INSTALLED ON THIS PROJECT.
7. FIRE HYDRANT EXTENSIONS SHALL BE PROVIDED IN ACCORDANCE WITH THE STANDARD SPECIFICATIONS. THE COST OF EACH EXTENSION SHALL BE CONSIDERED INCIDENTAL TO CONSTRUCTION THEREFORE NO SEPARATE PAYMENT WILL BE MADE.
8. JOINT RESTRAINT SHALL BE CONSIDERED INCIDENTAL TO WATER LINE CONSTRUCTION THEREFORE NO SEPARATE PAYMENT WILL BE MADE.
9. JOINT RESTRAINT SHALL BE PROVIDED ON ALL JOINTS OF FIRE HYDRANT LEGS FROM TEE TO FIRE HYDRANT INCLUDING THE TEE AND FIRE HYDRANT.
10. FOR THE PURPOSES OF THIS PROJECT, ALL RESTRAINED JOINTS AND JOINT RESTRAINT SHALL BE MECHANICALLY RESTRAINED. JOINT RESTRAINT LENGTHS SPECIFIED HEREON ARE THE LENGTHS TO BE RESTRAINED EACH SIDE OF THE FITTING.
11. THE CONTRACTOR SHALL BE RESPONSIBLE FOR SELECTING APPROPRIATE MEANS AND METHODS TO EXCAVATE AND TRENCH AND INSTALL PIPE SO AS TO NOT EXCEED RIGHT-OF-WAY OR EASEMENT LIMITS, AND SO AS NOT TO INTERFERE WITH OTHER UTILITIES. THIS SHALL BE CONSIDERED INCIDENTAL TO TRENCHING, THEREFORE, NO SEPARATE PAYMENT WILL BE MADE.
12. THE CONTRACTOR SHALL BE RESPONSIBLE FOR PROTECTING, SUPPORTING AND REPLACING, IF DAMAGED, ALL OTHER UTILITIES ENCOUNTERED DURING CONSTRUCTION. THIS SHALL BE CONSIDERED INCIDENTAL TO TRENCHING, THEREFORE, NO SEPARATE PAYMENT WILL BE MADE.
13. WHERE WATER AND SANITARY SEWER LINES CROSS, THE SANITARY SEWER LINE SHALL BE INSTALLED AS PRESSURE PIPE BETWEEN MANHOLES IF 18 INCHES OF VERTICAL SEPARATION DOES NOT EXIST.
14. ALL FIRE HYDRANTS SHALL BE SECURELY WRAPPED IN BLACK PLASTIC UNTIL SUCH TIME AS THE NEW WATER LINE IS PUT INTO SERVICE BY THE WATER AUTHORITY PERSONNEL.
15. NEW WATER LINE INSTALLATIONS SHALL INCLUDE INSULATED 12 GAUGE COPPER TRACER WIRE INSTALLED CONTINUOUSLY ALONG THE PIPE WITH WATER-PROOF SPLICE BOXES AT JUNCTIONS AND TEES. TRACER WIRE SHALL BE ACCESSIBLE AT ALL VALVES AND SERVICES. TRACER WIRE INSTALLATION SHALL BE CONSIDERED INCIDENTAL TO TRENCHING, THEREFORE, NO SEPARATE PAYMENT WILL BE MADE.

WATER LINE AND FIRE HYDRANT GIS DATA

ITEM	LOCATION	NAD' 83 GRID COORDINATES (US SURVEY FEET)		
		NORTHING	EASTING	ELEVATION
FH "A"	STA 6+83.89	1449114.31	1501634.84	5102.86
FH "B"	STA 9+09.44	1440088.34	1501423.44	5105.33
VALVE "A"	STA 6+91.89	1440106.40	1501634.64	5100.14
VALVE "B"	STA 7+13.89	1440106.78	1501617.62	5102.45
VALVE "C"	STA 9+04.44	1440092.62	1501437.75	5100.64
VALVE "D"	STA 9+09.44	1440087.42	1501432.57	5100.43
VALVE "E"	STA 9+15.44	1440082.05	1501432.43	5100.50
VALVE "F"	STA 10+16.13	1439980.05	1501435.45	5099.40
VALVE "G"	STA 10+21.13	1439974.87	1501432.00	5101.93

FIRE LINE SUMMARY

#	SIZE	LOCATION (STA/OFFSET)
1	8"	9+15.44 (5 FT RT)
2	6"	7+13.89 (5 FT RT)

HIGH MESA Consulting Group
6010-B MIDWAY PARK BLVD. NE • ALBUQUERQUE, NEW MEXICO 87109
PHONE: 505.345.4250 • FAX: 505.345.4254 • www.highmesacg.com
2013.187.87

AS BUILT INFORMATION
CONTRACTOR ALTOR
REVIEWED BY HMCS DATE 08/15
INSPECTOR'S ACCEPTANCE BY HMCS DATE 08/15
FIELD VERIFICATION BY HMCS DATE 08/15
DRAWINGS CORRECTED BY HMCS DATE 08/15
MICRO-FILM INFORMATION
RECORDED BY DATE
NO.

BENCH MARKS
AN A.C.R.S. BRASS DISK STAMPED "18-J11", SET FLUSH IN THE SIDEWALK, LOCATED IN THE NORTHEAST QUADRANT OF THE INTERSECTION OF COORS ROAD AND GLENRIO ROAD.
ELEVATION = 5099.609 FEET (NAVD 1988)

SURVEY INFORMATION
FIELD NOTES

NO.	BY	DATE
2013.180.3	HMCG	3/28/14

ENGINEER'S SEAL
J. EUGENE MEANS NEW MEXICO 13675 REGISTERED PROFESSIONAL ENGINEER
9/18/15
01/14/2015

RECORD DRAWING / AS-BUILTS

NO.	DATE	REMARKS	BY
2	08/15	Revisions	R.J.C.
		DESIGN	

Designed By G.M. Date 12-2014
Drawn By J.Y.R.\S.C.C. Date 12-2014
Checked By G.M. Date 01-2015

CITY OF ALBUQUERQUE
PUBLIC WORKS DEPARTMENT
ENGINEERING DEVELOPMENT GROUP

TITLE: PUBLIC WL EXTENSION PLAN & PROFILE STA 6+83.89 TO STA 10+21.13
PUBLIC AND PRIVATE WATER, SANITARY SEWER AND STORM DRAIN LINE EXTENSIONS AND RELOCATIONS
WEST MESA HIGH SCHOOL

Design Review Committee: APPROVED FEB 18 2015 DESIGN REVIEW COMMITTEE
City Engineer Approval: APPROVED MAR 23 2015 CITY ENGINEER

Last Design Update: Mo./Day/Yr. Mo./Day/Yr.

City Project No. 749982 | Zone Map No. J-10 | Sheet 3 Of 8

File Path: P:\MOA\2013.187.1\DWG\R2\ | Plot Date: 09-18-2015
File Name: 131877_SH3_ROA.DWG | Plot Time: 10:24 am

SCANNED BY PLANNING

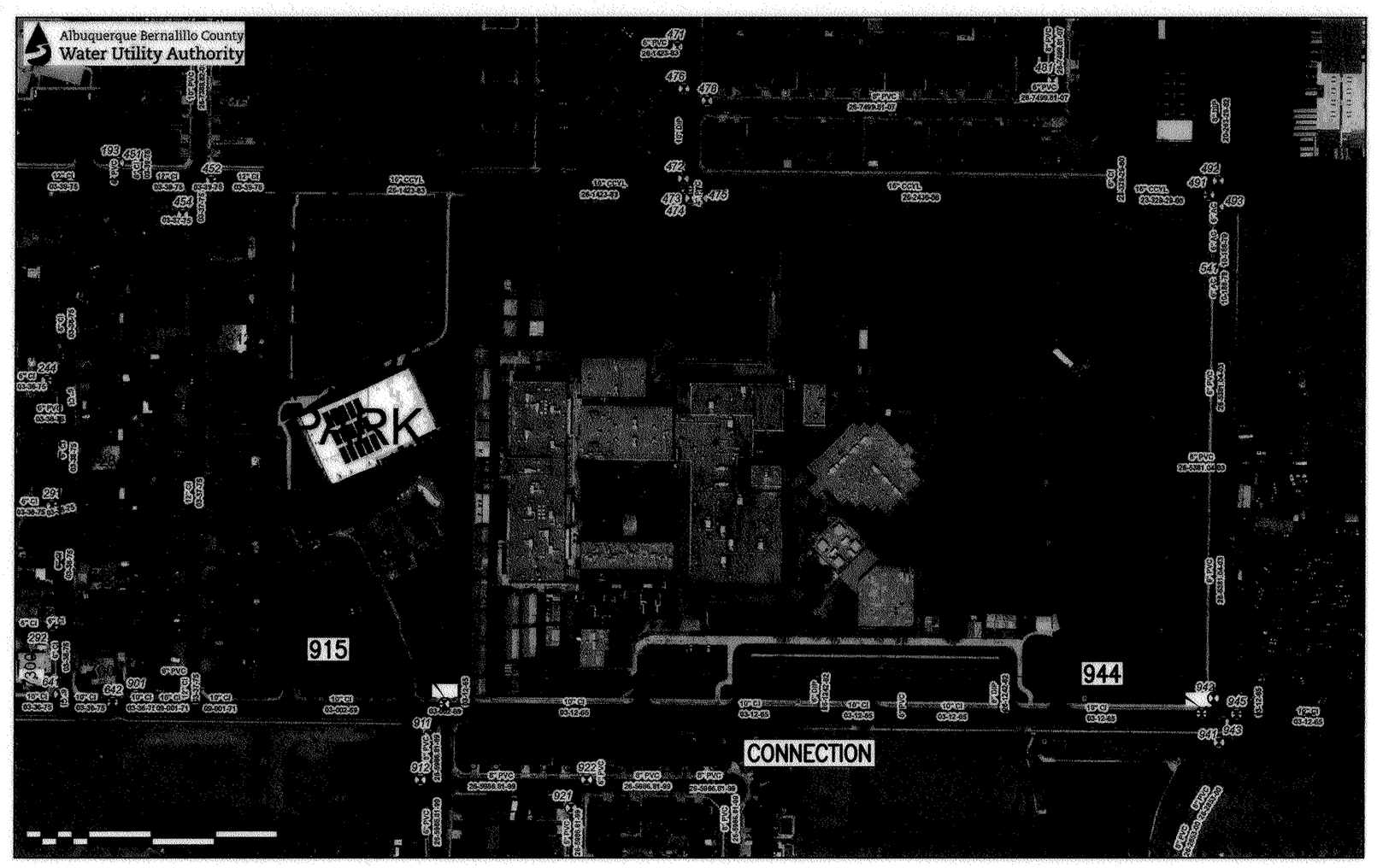

WATER VALVE SHUTOFF PLAN

(N.T.S.)

WATER VALVE SHUTOFF PLAN NOTES:

1. THE FOLLOWING VALVES AT A MINIMUM, SHOULD BE FACILITATE TO ISOLATE THE PROPOSED NON-PRESSURE CONNECTION:
   - VALVE #915 AND VALVE #944
2. WATER AUTHORITY PERSONNEL SHALL PERFORM ALL SHUTOFFS. THE CONTRACTOR SHALL NOT OPERATE ANY VALVES THAT MAY AFFECT SYSTEM OPERATIONS.
3. THE CONTRACTOR SHALL COORDINATE WITH THE WATER AUTHORITY SEVEN (7) DAYS IN ADVANCE OF PERFORMING WORK THAT WILL AFFECT THE PUBLIC WATER INFRASTRUCTURE. WORK REQUIRING SHUTOFF OF FACILITIES DESIGNATED AS MASTER PLAN FACILITIES MUST BE COORDINATED WITH THE WATER AUTHORITY 14 DAYS IN ADVANCE OF PERFORMING SUCH WORK. ONLY WATER AUTHORITY CREWS ARE AUTHORIZED TO OPERATE PUBLIC VALVES. SHUTOFF REQUESTS MUST BE MADE ONLINE AT http://www.abcwua.org/Water_Shut_off_and_Turn_on_Procedures.aspx
4. WITHIN FIVE (5) DAYS AFTER RECEIPT OF CONTRACTOR'S SHUTOFF REQUEST, TRIAL SHUTOFFS WILL BE CONDUCTED. THE WATER AUTHORITY TO FURNISH LABOR AND APPURTENANCES NECESSARY TO VERIFY COMPLETENESS OF SHUTOFFS.
5. THE CONTRACTOR SHALL HAVE ALL FITTINGS, MATERIALS AND EQUIPMENT ON SITE PRIOR TO VALVE SHUTOFF. ALL EXCAVATION SHALL BE COMPLETE EXCEPT AS NECESSARY TO MAINTAIN SAFE SYSTEM OPERATION WHILE UNDER PRESSURE.
6. THE CONTRACTOR SHALL PROVIDE ALL RESTRAINTS AND THRUST BLOCKS NECESSARY TO EFFECT ALL NECESSARY SHUTOFFS AND CONNECTIONS.
7. EXISTING WATER VALVE AND WATER LINE INFORMATION OBTAINED FROM CITY OF ALBUQUERQUE AUTOMATED WATER DISTRIBUTION SYSTEM SECTIONAL MAPS, MAP GRID J-10.
8. THE CONTRACTOR SHALL NOTIFY ALL AFFECTED PROPERTY OWNERS AT LEAST TWENTY-FOUR (24) HOURS IN ADVANCE OF THE RESPECTIVE SHUTOFFS. ALL VALVES REFERENCED ABOVE, ALSO SHOWN ON SITE PLAN ABOVE AT A LARGER SCALE FOR CLARITY.

2 RECORD DRAWING LEGEND

CONSTRUCT	RECORD INFORMATION (VERIFIED BY ENGINEER)
✓	AS-CONSTRUCTED = AS-DESIGNED (VERIFIED BY AS-BUILT SURVEY)
38' 42"	RECORD INFORMATION FROM AS-BUILT SURVEY
+25.2	RECORD INFORMATION FROM AS-BUILT SURVEY
⊕ 28,98.42	RECORD INFORMATION FROM AS-BUILT SURVEY

2

RECORD DRAWING
FOR CERTIFICATION, SEE SHEET 1

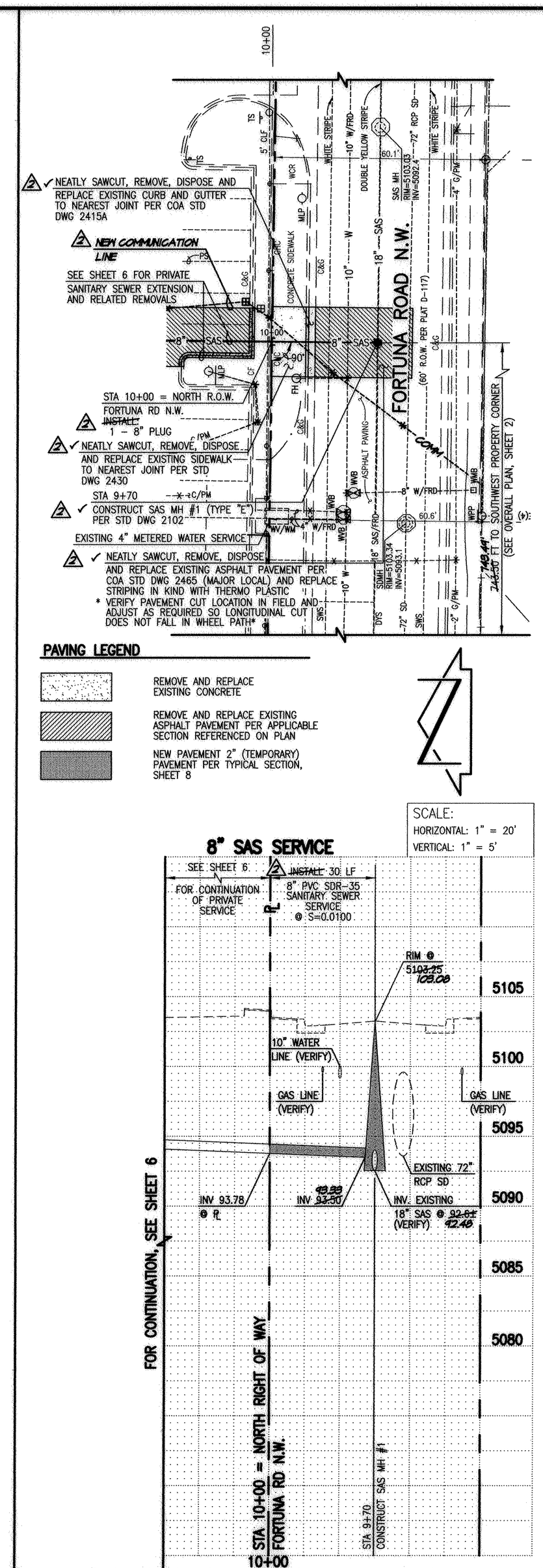

SANITARY SEWER CONSTRUCTION NOTES:

1. ALL STATIONING IS BASED ON CONSTRUCTION BASELINE UNLESS INDICATED OTHERWISE.
2. ALL SEWER PIPE SHALL BE PVC (SDR-35).
3. SLOPES SHOWN ON THE PROFILES ARE BASED ON TRUE DISTANCES.
4. SEWER SERVICE LATERALS AND MAINS SHALL BE PROVIDED WITH ELECTRONIC MARKER DEVICES (EMD) AS PER CITY OF ALBUQUERQUE STANDARD DRAWING 2125. EMD SHALL BE PROVIDED IN ACCORDANCE WITH THE STANDARD SPECIFICATION, SECTION 170.
5. THE CONTRACTOR SHALL BE RESPONSIBLE FOR SELECTING APPROPRIATE MEANS AND METHODS TO EXCAVATE AND TRENCH AND INSTALL PIPE SO AS TO NOT EXCEED RIGHT-OF-WAY OR EASEMENT LIMITS, AND SO AS NOT TO INTERFERE WITH OTHER UTILITIES. THIS SHALL BE CONSIDERED INCIDENTAL TO TRENCHING, THEREFORE, NO SEPARATE PAYMENT WILL BE MADE.
6. THE CONTRACTOR SHALL BE RESPONSIBLE FOR PROTECTING, SUPPORTING AND REPLACING, IF DAMAGED, ALL OTHER UTILITIES ENCOUNTERED DURING CONSTRUCTION. THIS SHALL BE CONSIDERED INCIDENTAL TO TRENCHING, THEREFORE, NO SEPARATE PAYMENT WILL BE MADE.
7. WHERE WATER AND SANITARY SEWER LINES CROSS, THE SANITARY SEWER LINE SHALL BE INSTALLED AS PRESSURE PIPE BETWEEN MANHOLES IF 18 INCHES OF VERTICAL SEPARATION DOES NOT EXIST.
8. ALL SANITARY SEWER MANHOLES SHALL BE 4' DIAMETER TYPE "E" MANHOLES PER WATER AUTHORITY STD. DWG. 2102 UNLESS OTHERWISE NOTED.

WATER LINE AND FIRE HYDRANT GIS DATA

ITEM	LOCATION	NAD' 83 GRID COORDINATES (US SURVEY FEET)		
		NORTHING	EASTING	ELEVATION
SAS MH #1	STA 9+70.00	1484465.73	1501611.03	5103.08

NOTE:
THIS IS NOT A BOUNDARY SURVEY; APPARENT PROPERTY CORNERS ARE SHOWN FOR ORIENTATION ONLY. THE BOUNDARY AND TOPOGRAPHIC INFORMATION DEPICTED HEREON IS BASED UPON THE BOUNDARY, TOPOGRAPHIC AND UTILITY SURVEYS PREPARED BY HIGH MESA CONSULTING GROUP, NMPS NO. 11184, DATED 03/28/2014 (2013.180.3).

HIGH MESA Consulting Group
6010-B MIDWAY PARK BLVD. NE • ALBUQUERQUE, NEW MEXICO 87109
PHONE: 505.345.4250 • FAX: 505.345.4254 • www.highmesacg.com

2013.187.87

CITY OF ALBUQUERQUE
PUBLIC WORKS DEPARTMENT
ENGINEERING DEVELOPMENT GROUP

TITLE: SANITARY SEWER SERVICE PLAN & PROFILE; WATER VALVE SHUTOFF PLAN PUBLIC AND PRIVATE WATER, SANITARY SEWER AND STORM DRAIN LINE EXTENSIONS AND RELOCATIONS WEST MESA HIGH SCHOOL

Design Review Committee: APPROVED FEB 18 2015 DESIGN REVIEW COMMITTEE
City Engineer Approval: APPROVED MAR 23 2015 CITY ENGINEER
Last Design Update: Mo./Day/Yr. | Mo./Day/Yr.

City Project No. 749982 | Zone Map No. J-10 | Sheet 4 Of 8

AS BUILT INFORMATION

		DATE
CONTRACTOR STAKED BY	HMCG	08/15
INSPECTOR'S FIELD ACCEPTANCE BY	HMCG	DATE 08/15
VERIFICATION BY	HMCG	DATE 08/15
DRAWINGS CORRECTED BY	HMCG	DATE 08/15

MICRO-FILM INFORMATION
RECORDED BY DATE
NO.

BENCH MARKS
AN A.G.R.S. BRASS DISK STAMPED "18-J11", SET FLUSH IN THE SIDEWALK, LOCATED IN THE NORTHEAST QUADRANT OF THE INTERSECTION OF COORS ROAD AND GLENRIO ROAD.
ELEVATION = 5099.609 FEET (NAVD 1988)

SURVEY INFORMATION

NO.	FIELD NOTES BY	DATE
2013.180.3	HMCG	3/28/14

ENGINEER'S SEAL
L. GRAHAME MEANS NEW MEXICO 11184 REGISTERED PROFESSIONAL ENGINEER
01/14/2015

RECORD DRAWING / AS-BUILTS

NO.	DATE	REMARKS	BY
1	08/15	Revisions	RJC

		Date
Designed By	G.M.	12-2014
Drawn By	J.T.R. / S.C.C.	12-2014
Checked By	G.M.	01-2015

File Path: P:\DATA\2013.187.7\DWG\R2\ | Plot Date: 09-18-2015
File Name: 131877_SH4_R2.DWG | Plot Time: 10:29 am

SCANNED BY PLANNING

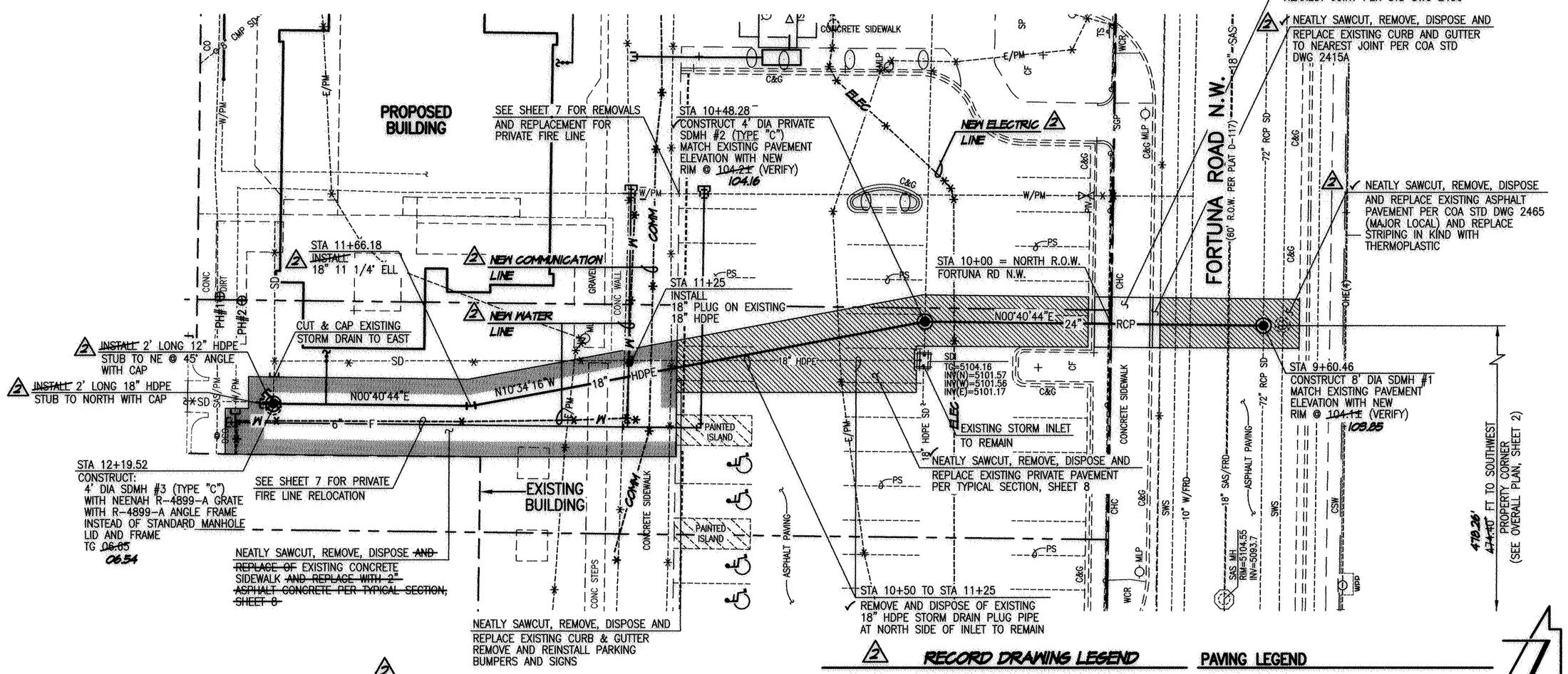

RECORD DRAWING
FOR CERTIFICATION, SEE SHEET 1

RECORD DRAWING LEGEND

~~CONSTRUCT~~	RECORD INFORMATION (VERIFIED BY ENGINEER)
✓	AS-CONSTRUCTED = AS-DESIGNED (VERIFIED BY AS-BUILT SURVEY)
36' 42'	RECORD INFORMATION FROM AS-BUILT SURVEY
+25.2	RECORD INFORMATION FROM AS-BUILT SURVEY
@ 28.96:42	RECORD INFORMATION FROM AS-BUILT SURVEY

PAVING LEGEND

- REMOVE AND REPLACE EXISTING CONCRETE
- REMOVE AND REPLACE EXISTING ASPHALT PAVEMENT PER APPLICABLE SECTION REFERENCED ON PLAN
- NEW PAVEMENT 2" (TEMPORARY) PAVEMENT PER TYPICAL SECTION, SHEET 8

SCALE:
HORIZONTAL: 1" = 20'
VERTICAL: 1" = 5'

SUBSURFACE UTILITY LOCATION REPORT

POTHOLE PH#	SURFACE ELEVATION	PAVEMENT THICKNESS	UTILITY			ONPOINT DEPTH TO		TOP OF UTILITY LINE ELEVATION
			TYPE	MATERIAL	DIAMETER	TOP OF PIPE	BOTTOM OF PIPE	
1	5106.43'	N/A	SANITARY SEWER	CI	4"	47"	___	5102.5 +/-
2	5106.44'	N/A	WATER	CI	4"	38"	___	5103.3 +/-

PRIVATE STORM DRAIN CONNECTION AND PRIVATE EXTENSION

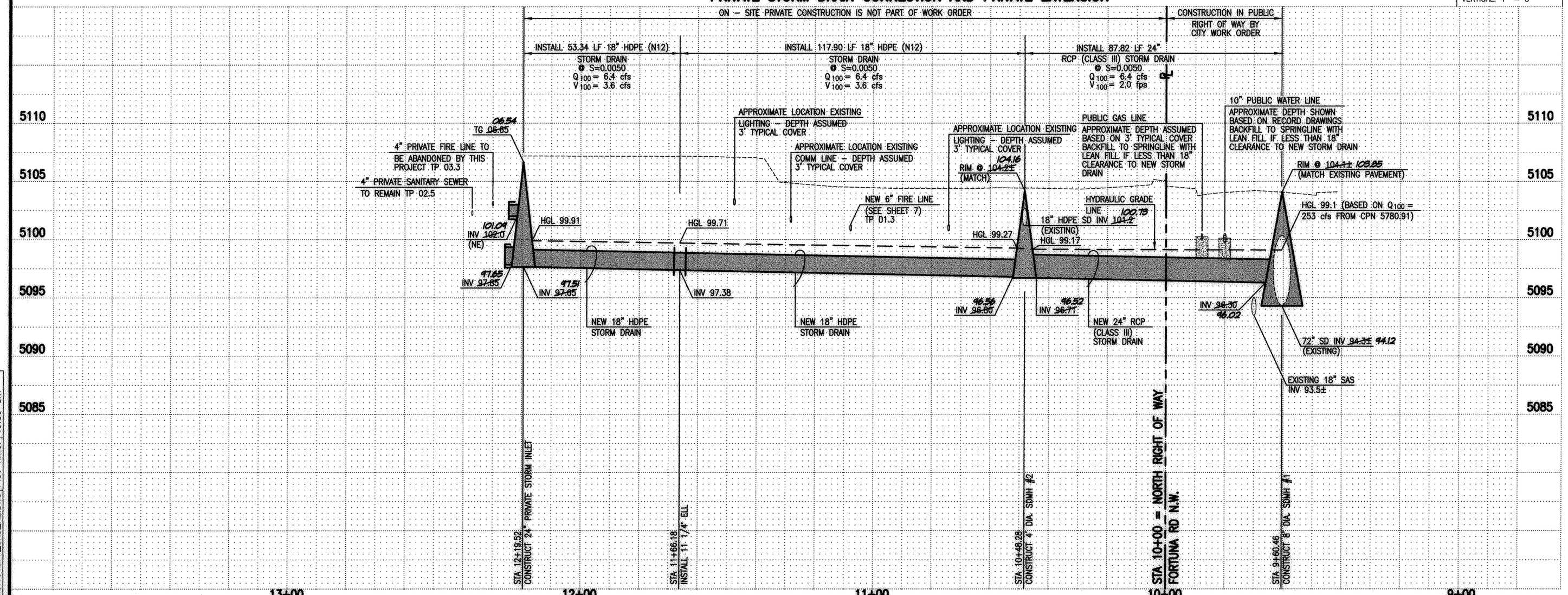

ELEVATIONS ARE IN NAVD 1988

RCP STORM DRAIN NOTES:

1. ALL STORM DRAIN TO BE CLASS III REINFORCED CONCRETE PIPE (RCP) UNLESS OTHERWISE NOTED.
2. ALL MANHOLES SHALL BE 6' DIAMETER TYPE 'C' PER CITY OF ALBUQUERQUE STANDARD DRAWING 2101 UNLESS OTHERWISE NOTED.
3. ALL STATIONING SHOWN HEREON IS BASED ON CONSTRUCTION BASELINE UNLESS OTHERWISE NOTED. SLOPES ARE BASED ON TRUE LENGTH OF PIPE.
4. THE CONTRACTOR SHALL BE RESPONSIBLE FOR SELECTING APPROPRIATE MEANS AND METHODS TO EXCAVATE AND TRENCH AND INSTALL PIPE SO AS TO NOT EXCEED RIGHT-OF-WAY OR EASEMENT LIMITS, AND SO AS NOT TO INTERFERE WITH OTHER UTILITIES. THIS SHALL BE CONSIDERED INCIDENTAL TO TRENCHING, THEREFORE, NO SEPARATE PAYMENT WILL BE MADE.
5. THE CONTRACTOR SHALL BE RESPONSIBLE FOR PROTECTING, SUPPORTING AND REPLACING, IF DAMAGED, ALL OTHER UTILITIES ENCOUNTERED DURING CONSTRUCTION. THIS SHALL BE CONSIDERED INCIDENTAL TO TRENCHING, THEREFORE, NO SEPARATE PAYMENT WILL BE MADE.
6. RCP SHALL BE INSTALLED SO THAT THE JOINT GAP AT THE HOME POSITION SHALL CONFORM TO THE APPROVED MANUFACTURER'S RECOMMENDATIONS. MANUFACTURER'S RECOMMENDED JOINT GAP TOLERANCES FOR EACH PIPE SIZE AND TYPE SHALL BE SUBMITTED TO THE ENGINEER FOR APPROVAL PRIOR TO PLACEMENT OF PIPE. RCP JOINTS SHALL NOT BE GROUTED UNLESS DIRECTED BY THE ENGINEER AFTER APPROVAL.

HDPE PIPE CONSTRUCTION NOTES:

1. HDPE PIPE AND FITTINGS SHALL MEET THE REQUIREMENTS OF AASHTO M 294 TYPE S FOR HDPE STORM DRAIN SYSTEMS.
2. JOINTS SHALL BE WATERTIGHT IN ACCORDANCE WITH THE REQUIREMENTS OF ASTM D3212. THE SPIGOTS SHALL HAVE O-RING GASKETS MEETING THE REQUIREMENTS OF ASTM F 477.
3. THE CONTRACTOR'S PROJECT SUPERINTENDENT AND FOREMAN OF THE PIPE-LAYING CREW SHALL SUBMIT TO THE OWNER A CERTIFICATE INDICATING COMPLETION OF AN ON-LINE TRAINING PROGRAM OFFERED BY ADS (ADS-PIPE.COM) OR OTHER MANUFACTURER AS APPROVED BY THE OWNER.
4. INSTALLATION SHALL BE IN ACCORDANCE WITH THE PIPE MANUFACTURER'S RECOMMENDATIONS.
5. ALL EXCAVATION SHALL BE IN ACCORDANCE WITH THE REQUIREMENTS OF SECTION 701 OF THE CITY OF ALBUQUERQUE STANDARD SPECIFICATIONS.
6. THE PIPE SHALL BE BEDDED IN A FOUNDATION OF COMPACTED GRANULAR MATERIAL THAT IS FREE OF ORGANIC MATTER, CLAY LUMPS, AND OTHER DELETERIOUS MATTER. THIS MATERIAL SHALL EXTEND A MINIMUM OF 6 INCHES BELOW THE OUTERMOST CORRUGATIONS AND BE USED FOR BACKFILL UP TO A MINIMUM OF 1 FOOT ABOVE THE TOP OF PIPE. UNTIL A MINIMUM COVER OF 1 FOOT IS ATTAINED, ONLY HAND OPERATED TAMPING EQUIPMENT MAY BE USED IN THE TRENCH PRISM OVER THE PIPE.
7. CONCRETE STRUCTURE CONNECTIONS FOR HDPE PIPE WILL REQUIRE THE USE OF A WATER STOP THAT MEETS THE PHYSICAL PROPERTIES OF ASTM C923. INSTALLATION SHALL BE PER MANUFACTURER'S SPECIFICATIONS.

NOTE:
THIS IS NOT A BOUNDARY SURVEY; APPARENT PROPERTY CORNERS ARE SHOWN FOR ORIENTATION ONLY. THE BOUNDARY AND TOPOGRAPHIC INFORMATION DEPICTED HEREON IS BASED UPON THE BOUNDARY, TOPOGRAPHIC AND UTILITY SURVEYS PREPARED BY HIGH MESA CONSULTING GROUP, NMPS NO. 11184, DATED 03/28/2014 (2013.180.3).

HIGH MESA Consulting Group
6010-B MIDWAY PARK BLVD. NE • ALBUQUERQUE, NEW MEXICO 87109
PHONE: 505.345.4250 • FAX: 505.345.4254 • www.highmesacg.com
2013.187.67

CITY OF ALBUQUERQUE
PUBLIC WORKS DEPARTMENT
ENGINEERING DEVELOPMENT GROUP

TITLE: STORM DRAIN CONNECTION AND EXTENSION PLAN AND PROFILE PUBLIC AND PRIVATE WATER, SANITARY SEWER AND STORM DRAIN LINE EXTENSIONS AND RELOCATIONS WEST MESA HIGH SCHOOL

APPROVED FEB 18 2015 DESIGN REVIEW COMMITTEE
APPROVED MAR 23 2015 CITY ENGINEER
Last Design Update

City Project No.	Zone Map No.	Sheet	Of
749982	J-10	5	8

AS BUILT INFORMATION

CONTRACTOR	ALTCR	DATE 02/15
WORK STAKED BY	HMCG	DATE 02/15
INSPECTOR'S ACCEPTANCE BY	HMCG	DATE 02/15
FIELD VERIFICATION BY	HMCG	DATE 02/15
DRAWINGS CORRECTED BY	HMCG	DATE 02/15

MICRO-FILM INFORMATION
RECORDED BY
DATE
NO.

BENCH MARKS
AN A.C.R.S. BRASS DISK STAMPED "18-J11", SET FLUSH IN THE SIDEWALK, LOCATED IN THE NORTHEAST QUADRANT OF THE INTERSECTION OF COORS ROAD AND GLENRIO ROAD.
ELEVATION = 5099.609 FEET (NAVD 1988)

SURVEY INFORMATION

NO.	BY	DATE
2013.180.3	HMCG	3/28/14

FIELD NOTES

ENGINEER'S SEAL
JOSEPH E. MEANS NEW MEXICO 13827 REGISTERED PROFESSIONAL ENGINEER
01/14/2015

RECORD DRAWING / AS-BUILTS

NO.	DATE	REMARKS	BY
1	05/15	Revisions	RJC

		DESIGN	Date	DESIGN	Date
Designed By	G.M.		12-2014		
Drawn By	J.T.R.\S.C.C.		12-2014		
Checked By	G.M.		01-2015		

File Path: P:\MWA\2013.187.7\ENG\R2\ | Plot Date: 09-18-2015
File Name: 131877_SH5_R2.DWG | Plot Time: 10:30 am

SUBSURFACE UTILITY LOCATION REPORT

POTHOLE PH#	SURFACE ELEVATION	PAVEMENT THICKNESS	UTILITY			ONPOINT DEPTH TO		TOP OF UTILITY LINE ELEVATION
			TYPE	MATERIAL	DIAMETER	TOP OF PIPE	BOTTOM OF PIPE	
3	5102.70'	N/A	SANITARY SEWER	CI	4"	50"	___	5098.2 +/-
4	5103.36'	N/A	SANITARY SEWER	AC	8"	67"	___	5097.1 +/-
5	5102.86'	N/A	SANITARY SEWER	AC	4"	42"	___	5099.0 +/-

SCANNED BY PLANNING

PAVING LEGEND

- REMOVE AND REPLACE EXISTING CONCRETE
- REMOVE AND REPLACE EXISTING ASPHALT PAVEMENT PER APPLICABLE SECTION REFERENCED ON PLAN
- NEW PAVEMENT 2" (TEMPORARY) PAVEMENT PER TYPICAL SECTION, SHEET 8

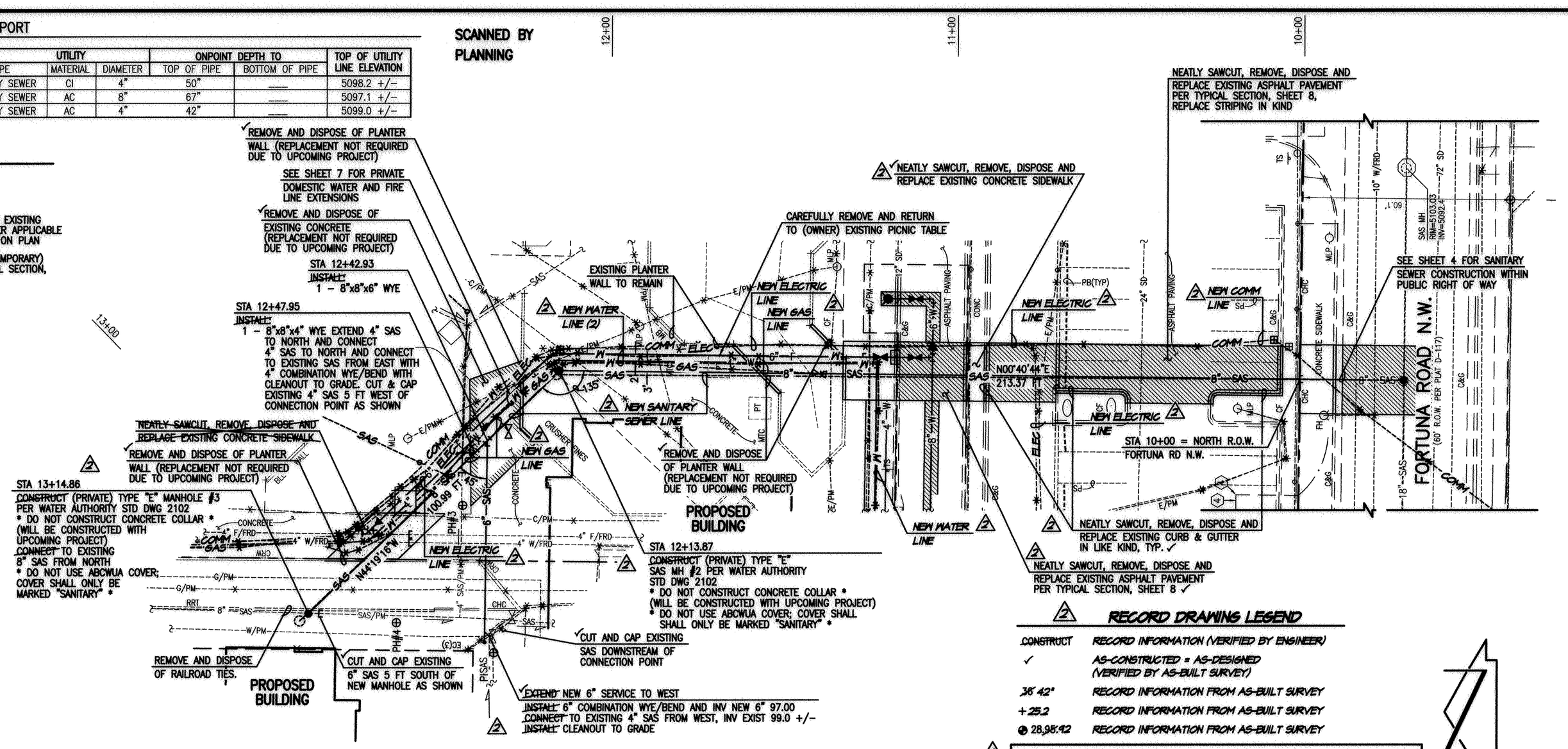

RECORD DRAWINGS LEGEND

CONSTRUCT	RECORD INFORMATION (VERIFIED BY ENGINEER)
✓	AS-CONSTRUCTED = AS-DESIGNED (VERIFIED BY AS-BUILT SURVEY)
36' 42"	RECORD INFORMATION FROM AS-BUILT SURVEY
+25.2	RECORD INFORMATION FROM AS-BUILT SURVEY
@ 28,985.42	RECORD INFORMATION FROM AS-BUILT SURVEY

RECORD DRAWING
FOR CERTIFICATION, SEE SHEET 1

SCALE:
HORIZONTAL: 1" = 20'
VERTICAL: 1" = 5'

PRIVATE SANITARY SEWER EXTENSION (NOT PART OF WORK ORDER)

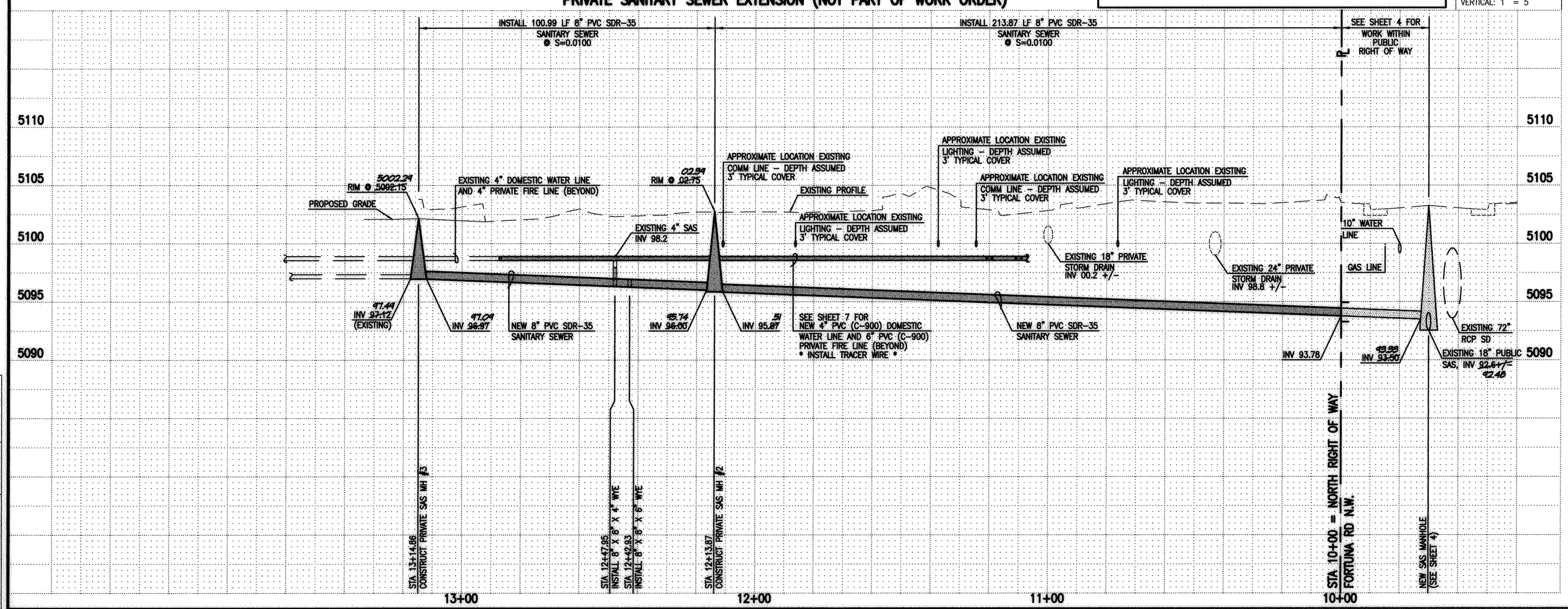

ELEVATIONS ARE IN NAVD 1988

SANITARY SEWER CONSTRUCTION NOTES:

1. ALL STATIONING IS BASED ON CONSTRUCTION BASE LINE UNLESS INDICATED OTHERWISE.
2. ALL SEWER PIPE SHALL BE PVC (SDR-35).
3. SLOPES SHOWN ON THE PROFILES ARE BASED ON TRUE DISTANCES.
4. THE CONTRACTOR SHALL BE RESPONSIBLE FOR SELECTING APPROPRIATE MEANS AND METHODS TO EXCAVATE AND TRENCH AND INSTALL PIPE SO AS TO NOT EXCEED RIGHT-OF-WAY OR EASEMENT LIMITS, AND SO AS NOT TO INTERFERE WITH OTHER UTILITIES. THIS SHALL BE CONSIDERED INCIDENTAL TO TRENCHING, THEREFORE, NO SEPARATE PAYMENT WILL BE MADE.
5. THE CONTRACTOR SHALL BE RESPONSIBLE FOR PROTECTING, SUPPORTING AND REPLACING, IF DAMAGED, ALL OTHER UTILITIES ENCOUNTERED DURING CONSTRUCTION. THIS SHALL BE CONSIDERED INCIDENTAL TO TRENCHING, THEREFORE, NO SEPARATE PAYMENT WILL BE MADE.
6. WHERE WATER AND SANITARY SEWER LINES CROSS, THE SANITARY SEWER LINE SHALL BE INSTALLED AS PRESSURE PIPE BETWEEN MANHOLES IF 18 INCHES OF VERTICAL SEPARATION DOES NOT EXIST.
7. ALL PRIVATE SANITARY SEWER MANHOLES SHALL BE 4' DIAMETER TYPE "E" MANHOLES PER WATER AUTHORITY STD. DWG. 2102 UNLESS OTHERWISE NOTED. DO NOT USE ABCWUA COVERS ON PRIVATE MANHOLES. COVERS SHALL ONLY BE MARKED "SANITARY".

ALL WORK ON THIS SHEET IS PRIVATE - NOT PART OF WORK ORDER

HIGH MESA Consulting Group
6010-B MIDWAY PARK BLVD. NE • ALBUQUERQUE, NEW MEXICO 87109
PHONE: 505.345.4250 • FAX: 505.345.4254 • www.highmesacg.com

2013.187.67

CITY OF ALBUQUERQUE
PUBLIC WORKS DEPARTMENT
ENGINEERING DEVELOPMENT GROUP

TITLE: PRIVATE SANITARY SEWER EXTENSION (NOT PART OF WORK ORDER) PUBLIC AND PRIVATE WATER, SANITARY SEWER AND STORM DRAIN LINE EXTENSIONS AND RELOCATIONS WEST MESA HIGH SCHOOL

Design Review Committee: N/A
City Engineer Approval: N/A
Last Design Update: Mo./Day/Yr. | Mo./Day/Yr.

City Project No. N/A | Zone Map No. J-10 | Sheet 6 Of 8

AS BUILT INFORMATION

		DATE
CONTRACTOR	ALTOR	
STAKED BY	HMCS	03/15
INSPECTOR'S ACCEPTANCE BY	HMCS	DATE 05/15
FIELD VERIFICATION BY	HMCS	DATE 08/15
AS-BUILT REVISIONS CORRECTED BY	HMCS	DATE 08/15
MICRO-FILM INFORMATION		DATE
RECORDED BY		
NO.		

BENCH MARKS

AN A.C.R.S. BRASS DISK STAMPED "18-J11", SET FLUSH IN THE SIDEWALK, LOCATED IN THE NORTHEAST QUADRANT OF THE INTERSECTION OF COORS ROAD AND GLENRIO ROAD.
ELEVATION = 5099.609 FEET (NAVD 1988)

SURVEY INFORMATION

NO.	BY	DATE
2013.180.3	HMCG	3/28/14

FIELD NOTES

ENGINEER'S SEAL

J. GRAEME MEANS NEW MEXICO 13677 REGISTERED PROFESSIONAL ENGINEER
01/14/2015

RECORD DRAWING / AS-BUILTS

NO.	DATE	REMARKS	BY
1	05/15	Revisions	RJC

DESIGN

Designed By	G.M.	Date 12-2014
Drawn By	J.Y.R.\S.C.C.	Date 12-2014
Checked By	G.M.	Date 01-2015

File Path: P:\DATA\2013.187.7\DWG\R2\ | Plot Date: 09-18-2015
File Name: 131877_SH6_R2.DWG | Plot Time: 10:39 am

SCANNED BY PLANNING

SUBSURFACE UTILITY LOCATION REPORT

POTHOLE PH#	SURFACE ELEVATION	PAVEMENT THICKNESS	UTILITY			ONPOINT DEPTH TO		TOP OF UTILITY LINE ELEVATION
			TYPE	MATERIAL	DIAMETER	TOP OF PIPE	BOTTOM OF PIPE	
1	5106.43'	N/A	SANITARY SEWER	CI	4"	47"	___	5102.2±
2	5106.44'	N/A	WATER	CI	4"	38"	___	5103.3±
3	5102.70'	N/A	SANITARY SEWER	CI	4"	50"	___	5098.2±
4	5103.36'	N/A	SANITARY SEWER	AC	8"	67"	___	5097.1±
5	5102.86'	N/A	SANITARY SEWER	AC	4"	42"	___	5099.0±

RECORD DRAWING
FOR CERTIFICATION, SEE SHEET 1

RECORD DRAWING LEGEND

CONSTRUCT	RECORD INFORMATION (VERIFIED BY ENGINEER)
✓	AS-CONSTRUCTED = AS-DESIGNED (VERIFIED BY AS-BUILT SURVEY)
36' 42"	RECORD INFORMATION FROM AS-BUILT SURVEY
+25.2	RECORD INFORMATION FROM AS-BUILT SURVEY
⊕ 28,98:42	RECORD INFORMATION FROM AS-BUILT SURVEY

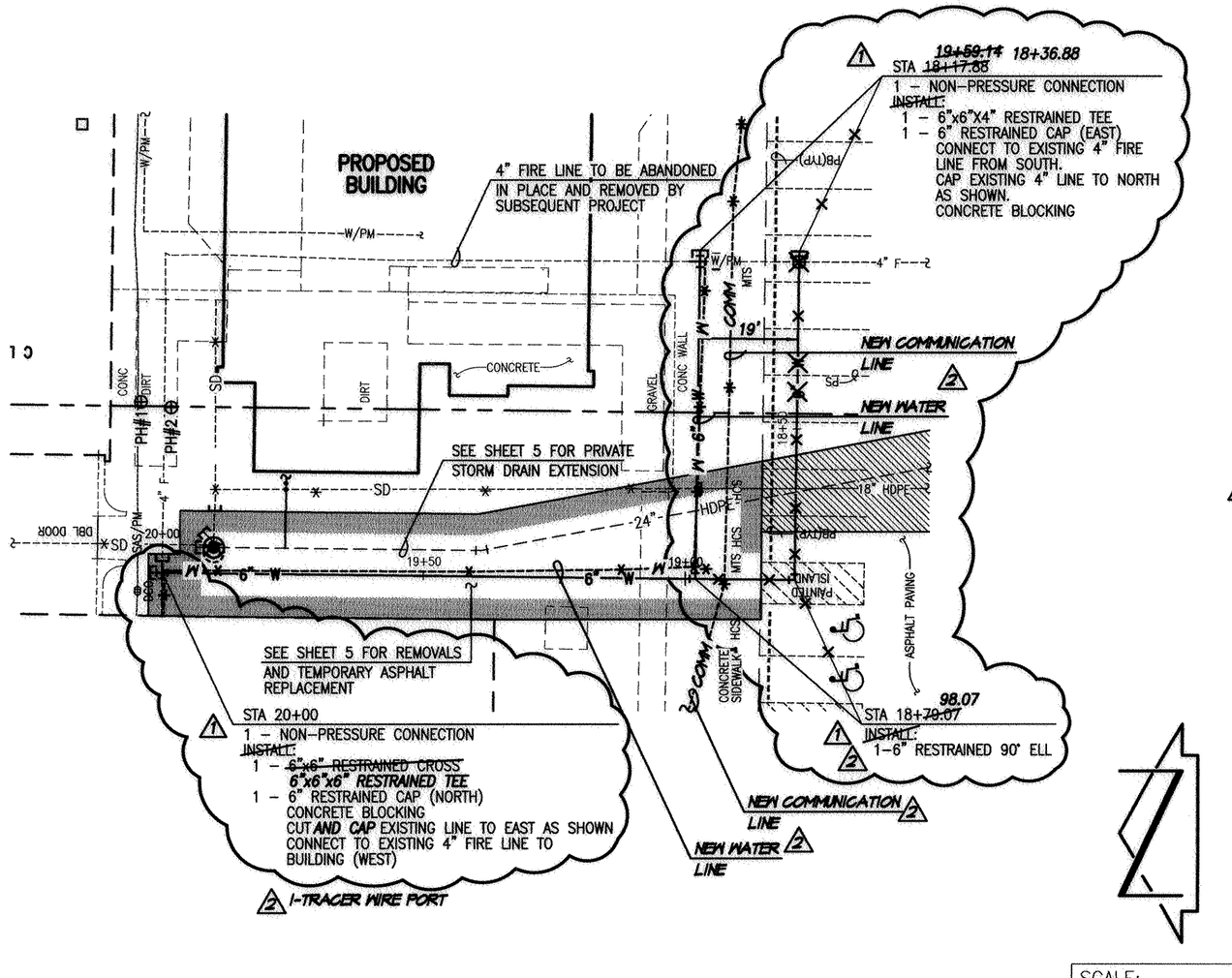

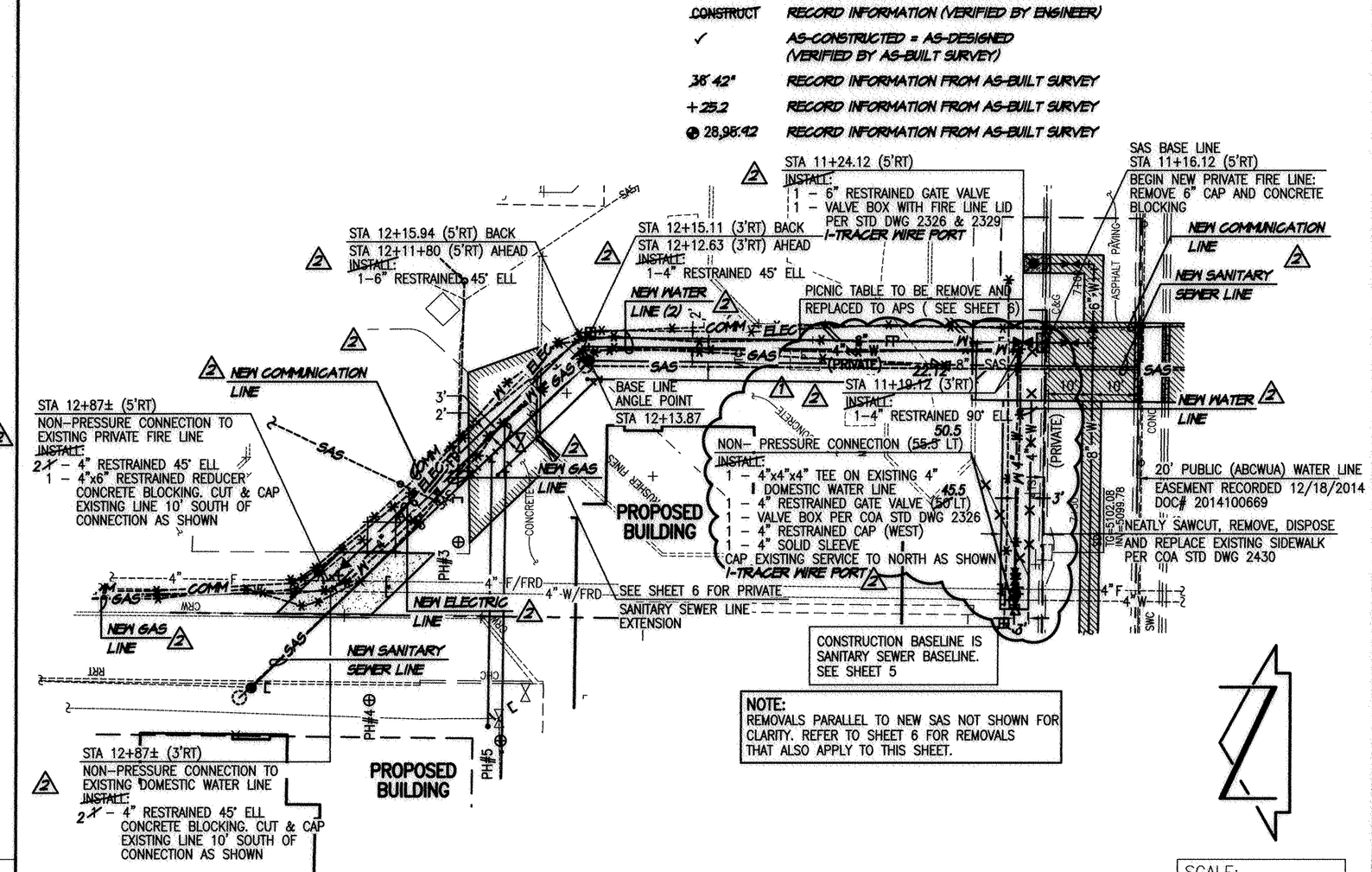

NOTE:
REMOVALS PARALLEL TO NEW SAS NOT SHOWN FOR CLARITY. REFER TO SHEET 6 FOR REMOVALS THAT ALSO APPLY TO THIS SHEET.

WATER LINE CONSTRUCTION NOTES:

1. ALL STATIONING IS BASED ON SANITARY SEWER BASELINE (SEE SHEET 5) UNLESS INDICATED OTHERWISE.
2. FOR ALL LINES 12" AND SMALLER, WATER MAIN SHALL BE PVC C–900 DR18 PIPE OR AS APPROVED BY THE WATER AUTHORITY. DUCTILE IRON IS AN ACCEPTABLE PIPE MATERIAL IN LIEU OF PVC.
3. FOR ALL LINES LARGER THAN 12", WATER MAIN SHALL BE DUCTILE IRON OR PVC C–905 OR AS APPROVED BY THE WATER AUTHORITY. CONCRETE CYLINDER IS AN ACCEPTABLE PIPE MATERIAL IN LIEU OF DUCTILE IRON.
4. WATER LINE SHALL HAVE A MINIMUM COVER OF 3'–0" (FINISHED GRADE TO TOP OF PIPE) FOR ALL LINES 12" OR SMALLER; 4'–0" MINIMUM COVER FOR LINES 14" OR LARGER. EXTRA DEPTH TRENCHING, IF REQUIRED, SHALL BE CONSIDERED INCIDENTAL TO CONSTRUCTION, THEREFORE, NO SEPARATE PAYMENT WILL BE MADE.
5. IN ACCORDANCE WITH SECTION 801 OF THE "STANDARD SPECIFICATIONS", METALIZED DETECTABLE WARNING TAPE SHALL BE INSTALLED 18" ABOVE ALL PVC PIPE INSTALLED ON THIS PROJECT.
6. FIRE HYDRANT EXTENSIONS SHALL BE PROVIDED IN ACCORDANCE WITH THE STANDARD SPECIFICATIONS. THE COST OF EACH EXTENSION SHALL BE CONSIDERED INCIDENTAL TO CONSTRUCTION THEREFORE NO SEPARATE PAYMENT WILL BE MADE.
7. JOINT RESTRAINT SHALL BE CONSIDERED INCIDENTAL TO WATER LINE CONSTRUCTION THEREFORE NO SEPARATE PAYMENT WILL BE MADE.
8. JOINT RESTRAINT SHALL BE PROVIDED ON ALL JOINTS OF FIRE HYDRANT LEGS FROM TEE TO FIRE HYDRANT INCLUDING THE TEE AND FIRE HYDRANT.
9. FOR THE PURPOSES OF THIS PROJECT, ALL RESTRAINED JOINTS AND JOINT RESTRAINT SHALL BE MECHANICALLY RESTRAINED. JOINT RESTRAINT LENGTHS SPECIFIED HEREON ARE THE LENGTHS TO BE RESTRAINED EACH SIDE OF THE FITTING.
10. THE CONTRACTOR SHALL BE RESPONSIBLE FOR SELECTING APPROPRIATE MEANS AND METHODS TO EXCAVATE AND TRENCH AND INSTALL PIPE SO AS TO NOT EXCEED RIGHT–OF–WAY OR EASEMENT LIMITS, AND SO AS NOT TO INTERFERE WITH OTHER UTILITIES. THIS SHALL BE CONSIDERED INCIDENTAL TO TRENCHING, THEREFORE, NO SEPARATE PAYMENT WILL BE MADE.
11. THE CONTRACTOR SHALL BE RESPONSIBLE FOR PROTECTING, SUPPORTING AND REPLACING, IF DAMAGED, ALL OTHER UTILITIES ENCOUNTERED DURING CONSTRUCTION. THIS SHALL BE CONSIDERED INCIDENTAL TO TRENCHING, THEREFORE, NO SEPARATE PAYMENT WILL BE MADE.
12. WHERE WATER AND SANITARY SEWER LINES CROSS, THE SANITARY SEWER LINE SHALL BE INSTALLED AS PRESSURE PIPE BETWEEN MANHOLES IF 18 INCHES OF VERTICAL SEPARATION DOES NOT EXIST.
13. NEW WATER LINE INSTALLATIONS SHALL INCLUDE INSULATED 12 GAUGE COPPER TRACER WIRE INSTALLED CONTINUOUSLY ALONG THE PIPE WITH WATER–PROOF SPLICE BOXES AT JUNCTIONS AND TEES. TRACER WIRE SHALL BE ACCESSIBLE AT ALL VALVES AND SERVICES. TRACER WIRE INSTALLATION SHALL BE CONSIDERED INCIDENTAL TO TRENCHING, THEREFORE, NO SEPARATE PAYMENT WILL BE MADE.

PAVING LEGEND

- REMOVE AND REPLACE EXISTING CONCRETE
- REMOVE AND REPLACE EXISTING ASPHALT PAVEMENT PER APPLICABLE SECTION REFERENCED ON PLAN
- NEW PAVEMENT 2" (TEMPORARY) PAVEMENT PER TYPICAL SECTION, SHEET 8

ALL WORK ON THIS SHEET IS PRIVATE – NOT PART OF WORK ORDER

PRIVATE FIRE LINE RELOCATION (NOT PART OF WORK ORDER)

SCALE:
HORIZONTAL: 1" = 20'
VERTICAL: 1" = 5'

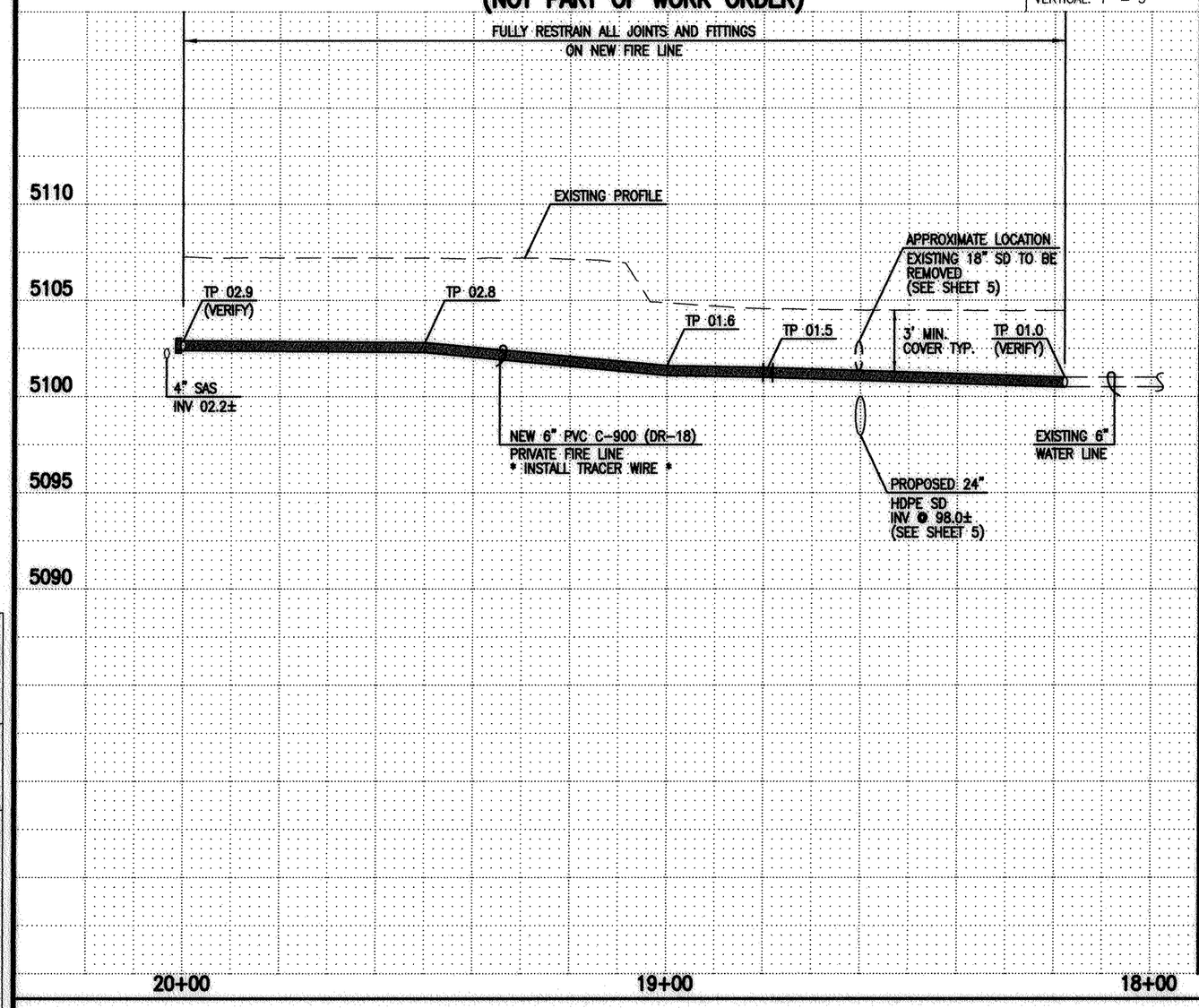

PRIVATE AND DOMESTIC WATER LINE RELOCATIONS (NOT PART OF WORK ORDER)

SCALE:
HORIZONTAL: 1" = 20'
VERTICAL: 1" = 5'

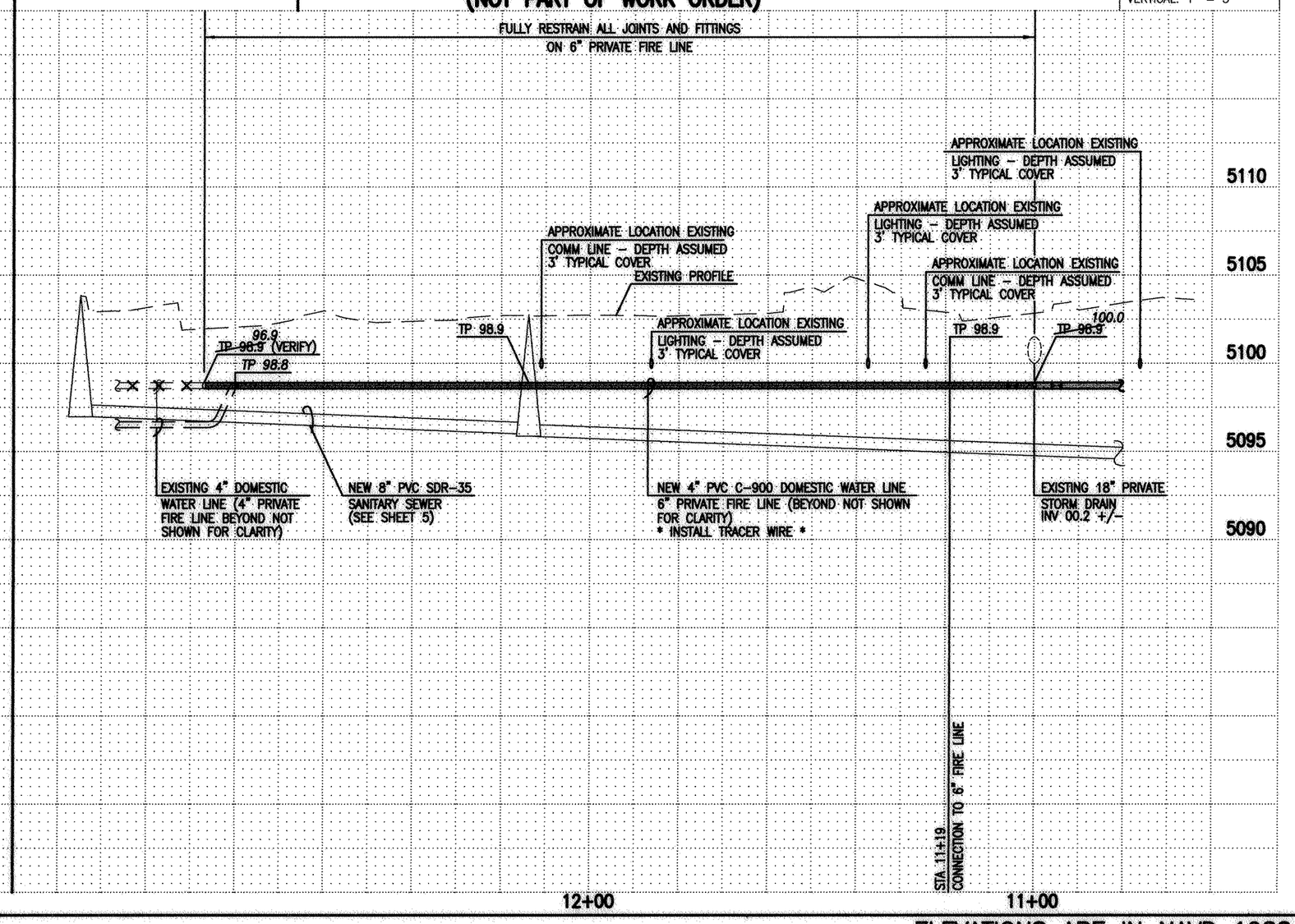

ELEVATIONS ARE IN NAVD 1988

AS BUILT INFORMATION

CONTRACTOR	ALTCR	DATE	02/15
WORK STAKED BY	HMCS	DATE	02/15
INSPECTOR'S ACCEPTANCE BY	HMCS	DATE	02/15
FIELD VERIFICATION BY	HMCS	DATE	02/15
DRAWINGS CORRECTED BY	HMCS	DATE	02/15

MICRO–FILM INFORMATION

RECORDED BY: DATE:
NO.:

BENCH MARKS

AN A.C.R.S. BRASS DISK STAMPED "18–J11", SET FLUSH IN THE SIDEWALK. LOCATED IN THE NORTHEAST QUADRANT OF THE INTERSECTION OF COORS ROAD AND GLENRIO ROAD.
ELEVATION = 5099.609 FEET (NAVD 1988)

SURVEY INFORMATION

FIELD NOTES

NO.	BY	DATE
2013.180.3	HMCG	3/28/14

ENGINEER'S SEAL

JOSEPH E. BEAMS, NEW MEXICO, 13675, REGISTERED PROFESSIONAL ENGINEER, SEAL 01/14/2015

4/2015	OFFSET PRIVATE WATER AND FIRE LINE	RJC	
08/15	RECORD DRAWING	RJC	

NO.	DATE	REMARKS	BY
		Revisions	
		DESIGN	

Designed By	G.M.	Date	12–2014
Drawn By	J.Y.R./S.C.C.	Date	12–2014
Checked By	G.M.	Date	01–2015

HIGH MESA Consulting Group
6010-B MIDWAY PARK BLVD. NE • ALBUQUERQUE, NEW MEXICO 87109
PHONE: 505.345.4250 • FAX: 505.345.4254 • www.highmesacg.com
2013.187.87

CITY OF ALBUQUERQUE
PUBLIC WORKS DEPARTMENT
ENGINEERING DEVELOPMENT GROUP

TITLE: PRIVATE WATER & FIRE LINE EXTENSIONS (NOT PART OF WORK ORDER)
PUBLIC AND PRIVATE WATER, SANITARY SEWER AND STORM DRAIN LINE EXTENSIONS AND RELOCATIONS
WEST MESA HIGH SCHOOL

Design Review Committee	City Engineer Approval	Last Design Update	Mo./Day/Yr.	Mo./Day/Yr.
N/A	N/A			

City Project No.	Zone Map No.	Sheet	Of
N/A	J–10	7	8

File Path: P:\DATA\2013.187.7\DWG\R2\ | Plot Date: 09–18–2015
File Name: 131877_SH7–R2–SC.DWG | Plot Time: 10:45 am

SCANNED BY PLANNING

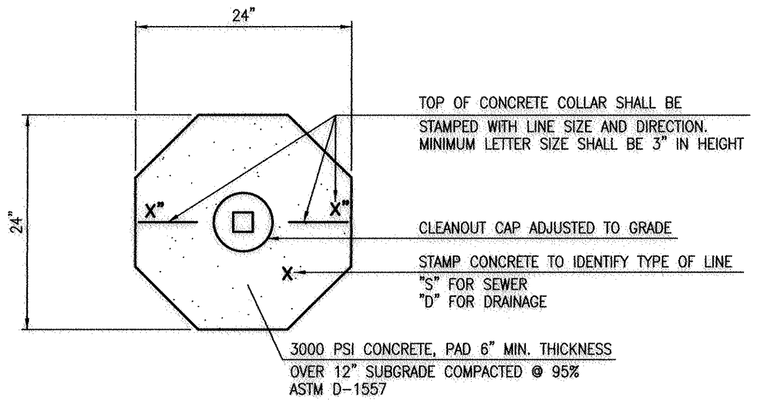

D1 TYPICAL CLEANOUT COLLAR DETAIL (PRIVATE)
SCALE: 1" = 1"

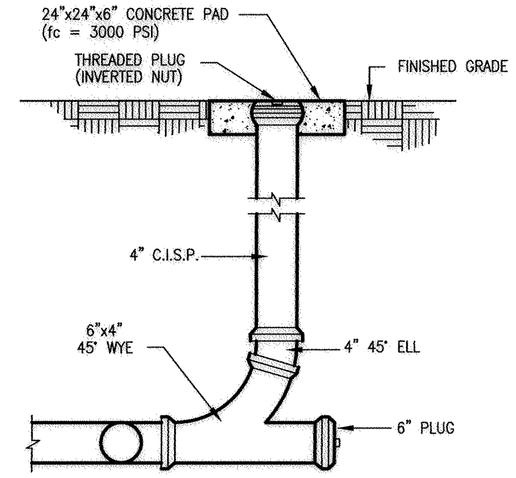

D2 TYPICAL SINGLE CLEANOUT SECTION (PRIVATE)
NOT TO SCALE

RECORD DRAWING

THESE SECTIONS AND DETAILS APPLY TO PRIVATE CONSTRUCTION ONLY AND ARE NOT PART OF PUBLIC WORK ORDER

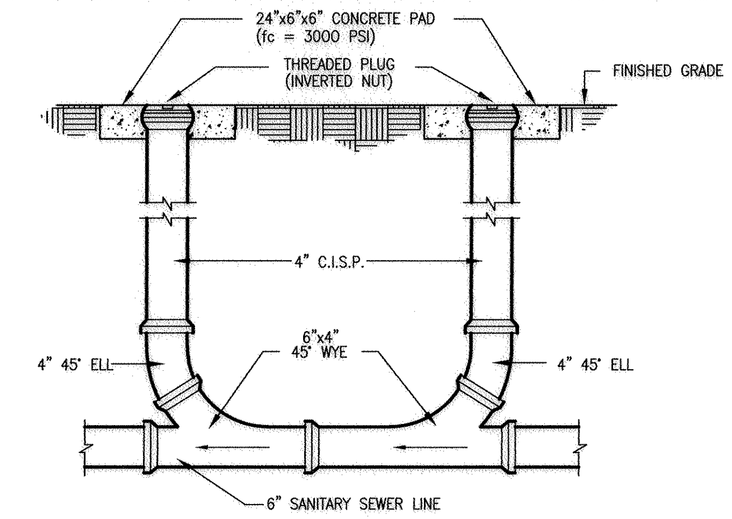

D5 TYPICAL DOUBLE CLEANOUT SECTION (PRIVATE)
NOT TO SCALE

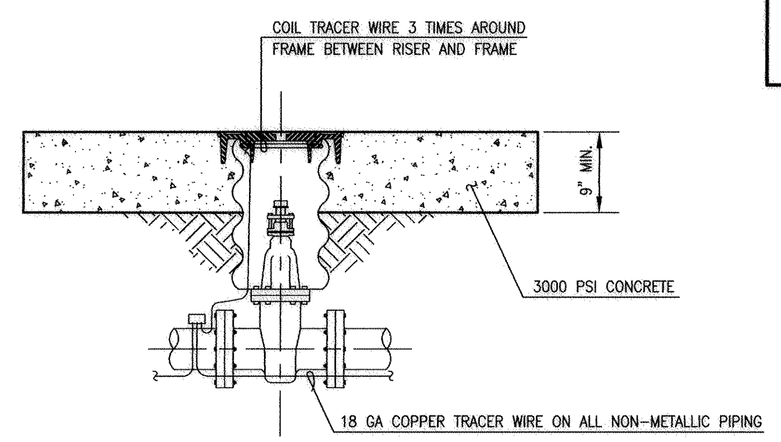

C2 TRACER WIRE AT WATER VALVE BOX SECTION (PRIVATE)
SCALE: 1" = 1'

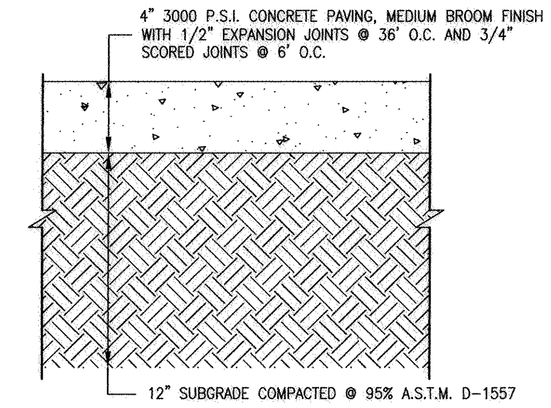

C5 TYPICAL CONCRETE SIDEWALK SECTION
SCALE: 1" = 0'-6"

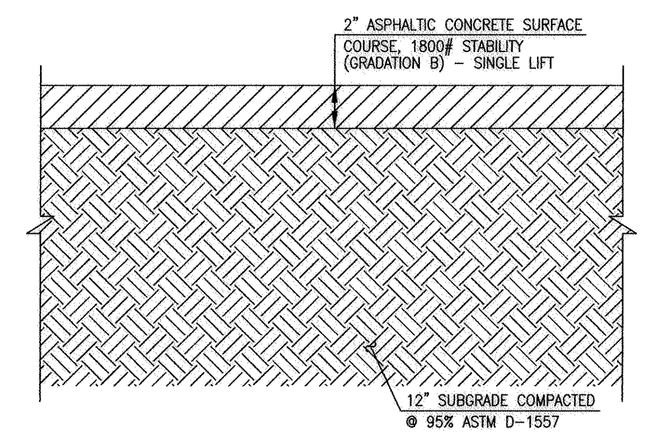

B5 TYPICAL 2" ASPHALT PAVING SECTION (PEDESTRIAN TRAFFIC AREAS)
SCALE: 1" = 0'-5"

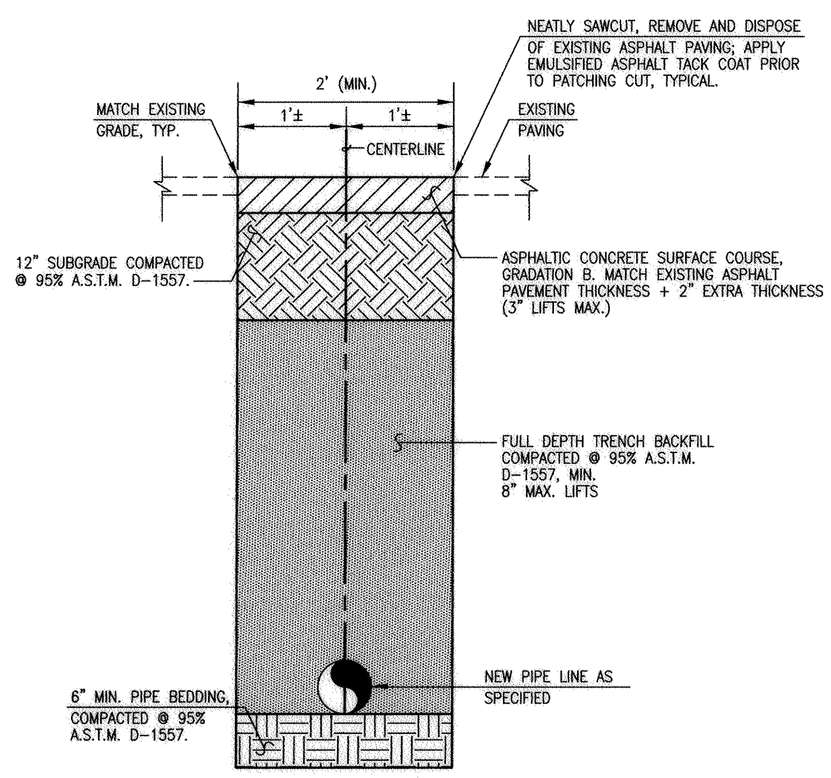

A2 TYPICAL PRIVATE PAVING UTILITY CUT AND PAVEMENT REPLACEMENT SECTION (PRIVATE)
SCALE: 1" = 1'-0"

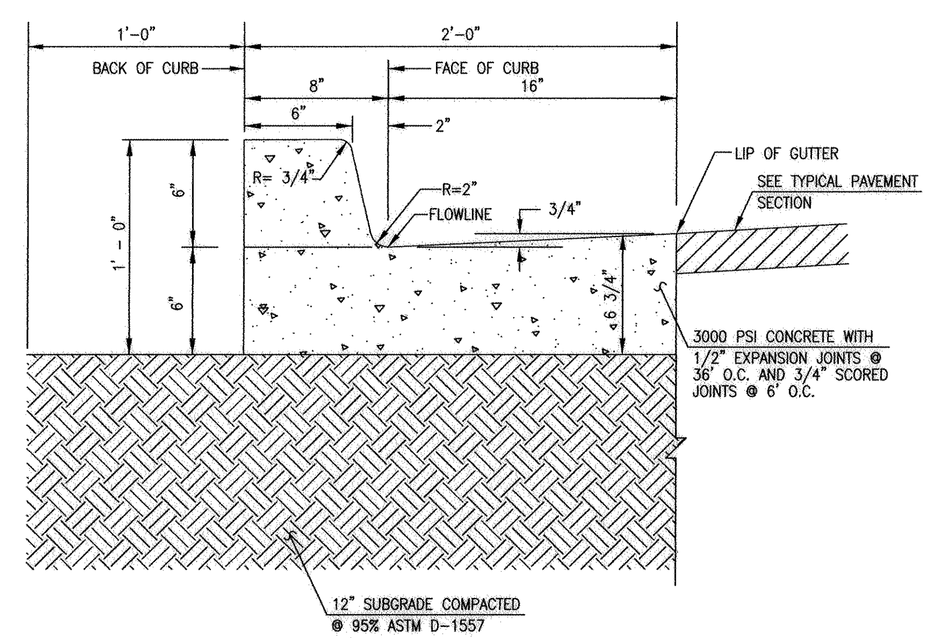

A4 TYPICAL SIX-INCH CURB & GUTTER
SCALE: 1" = 0'-6"

2013.187 7/8

File Path: P:\DATA\2013.187.7\DWG\PZ\	Plot Date: 09-18-2015
File Name: 131877_SH8_R2.DWG	Plot Time: 10:47 am

AS BUILT INFORMATION

CONTRACTOR	ALTCR	DATE 03/15
WORK STAKED BY	HKCS	
INSPECTOR'S ACCEPTANCE BY	HKCS	DATE 05/15
FIELD VERIFICATION BY	HKCS	DATE 08/15
DRAWINGS CORRECTED BY	HKCS	DATE 08/15

MICRO-FILM INFORMATION
RECORDED BY DATE
NO.

BENCH MARKS
AN A.G.R.S. BRASS DISK STAMPED "18-J11", SET FLUSH IN THE SIDEWALK, LOCATED IN THE NORTHEAST QUADRANT OF THE INTERSECTION OF COORS ROAD AND GLENRIO ROAD.
ELEVATION = 5099.609 FEET (NAVD 1988)

SURVEY INFORMATION

NO.	FIELD NOTES BY	DATE
2013.180.3	HMCG	3/28/14

ENGINEER'S SEAL
J. GRAEME MEANS NEW MEXICO 15367 REGISTERED PROFESSIONAL ENGINEER
09/18/15

RJC

NO.	DATE	REMARKS	BY
		Revisions	
		DESIGN	

Designed By G.M. Date 12-2014
Drawn By J.T.R./S.C.C. Date 12-2014
Checked By G.M. Date 01-2015

08/15 RECORD DRAWING

HIGH MESA Consulting Group
6010-B MIDWAY PARK BLVD. NE • ALBUQUERQUE, NEW MEXICO 87109
PHONE: 505.345.4250 • FAX: 505.345.4254 • www.highmesacg.com

CITY OF ALBUQUERQUE
PUBLIC WORKS DEPARTMENT
ENGINEERING DEVELOPMENT GROUP

TITLE: PRIVATE SECTIONS AND DETAILS (NOT PART OF WORK ORDER) PUBLIC AND PRIVATE WATER, SANITARY SEWER AND STORM DRAIN LINE EXTENSIONS AND RELOCATIONS WEST MESA HIGH SCHOOL

Design Review Committee	City Engineer Approval	Last Design Update	Mo./Day/Yr.	Mo./Day/Yr.
N/A	N/A			

City Project No.	Zone Map No.	Sheet	Of
N/A	J-10	8	8