CITY OF ALBUQUERQUE NEW MEXICO

DEPARTMENT OF MUNICIPAL DEVELOPMENT CONSTRUCTION PLANS

FOR

CITY OF ALBUQUERQUE
PLANNING
These plans have been reviewed for code compliance and are:
APPROVED
The Approval of these plans shall not be construed to be a permit for any violations of any code or ordinance of this city.
PERMIT #: BP-2018-46240
DATE: 12/27/18
A printed copy of these plans shall be on the job site for all requested inspections.

PROJECT AREA
LENGTH OF PROJECT = 0.05 MILE

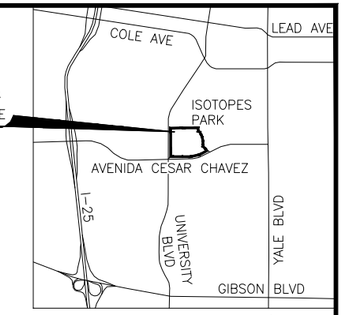

VICINITY MAP
1"=2000'
ZONE ATLAS – L15

DESCRIPTION OF WORK:
INCREASE VERTICAL CLEARANCE OF EXISTING ISOTOPES PARK PEDESTRIAN BRIDGE WITH PROPOSED RAMP IMPROVEMENTS. PROPOSED ACCESS ROAD IMPROVEMENTS TO ACCOMMODATE WB67 DESIGN VEHICLE.

ISOTOPES PARK PEDESTRIAN BRIDGE AND ACCESS ROAD IMPROVEMENTS

COA PROJECT NO. 7703.74 (CONSTRUCTION)
COA PROJECT NO. 7703.12 - TASK 13 (DESIGN)

Two working days before you dig
CALL NEW MEXICO ONE CALL SYSTEM
260-1990

T·Y· LIN INTERNATIONAL
engineers | planners | scientists
500 4th Street NW Suite 403
Albuquerque, NM 87102

REV.	DATE	CITY ENGINEER	DATE	USER DEPARTMENT	DATE	USER DEPARTMENT	DATE

ENGINEERS STAMP & SIGNATURE

ERIC J. FROBERG
NEW MEXICO
18855
PROFESSIONAL ENGINEER
12/07/2018

APPROVALS	ENGINEER	DATE
DRC Chairman		
Transportation		
Water/Wastewater		
Hydrology		
Parks		
Constr. Mngmt.		
Constr. Coord.		

City Project No.
7703.74

****
APPROVED FOR CONSTRUCTION

City Engineer Date

Sheet 1 Of 15

Phoenix Half Scale.ctb
Tate Jensen
12/7/2018 8:41:46 AM
P:\CoA On-call\Task 11 – Isotopes Park\CADD\Plans\Isotopes_CS01.dwg

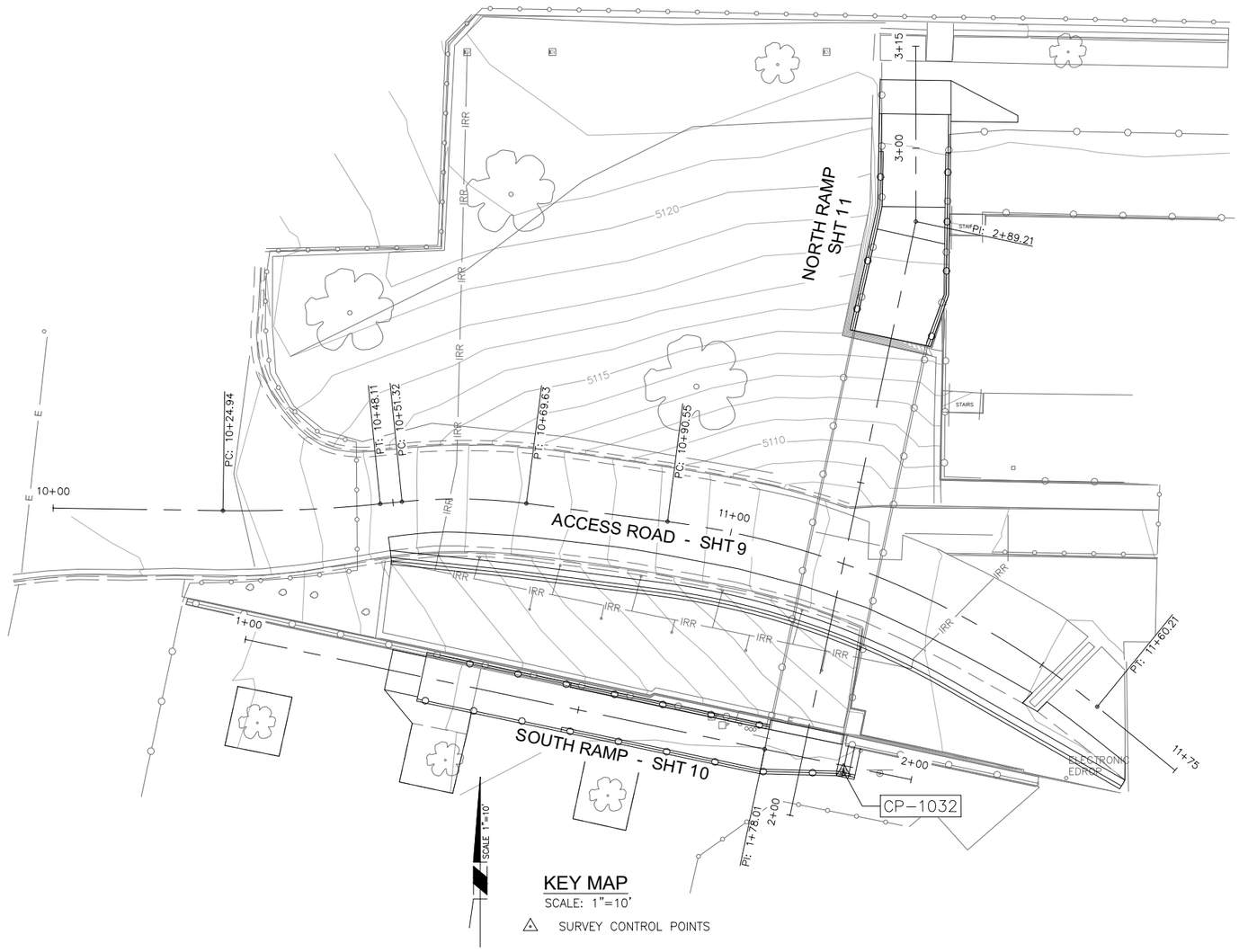

KEY MAP

SCALE: 1"=10'

△ SURVEY CONTROL POINTS

SURVEY CONTROL POINTS				
NO.	NORTHING	EASTING	ELEVATION	DESCRIPTION
CP-1032	1,481,622.51	1,527,311.71	5119.85	COA CONTROL STATION "1_J15R"

GENERAL NOTES

1. BEARINGS ARE BASED UPON NEW MEXICO STATE PLANE GRID BEARINGS (NAD 83-CENTRAL ZONE) AND WERE DERIVED BY GPS RTK OBSERVATIONS REFERENCED TO THE "TRIMBLE VRSNOW REGIONAL RTK NETWORK".
2. THE COORDINATES SHOWN HEREON ARE MODIFIED (SURFACE) N.M. STATE PLANE COORDINATES AND WERE SCALED BY THE PROJECT COMBINED FACTOR OF 1.000340271 AROUND AN ORIGIN OF 0,0.
3. ELEVATIONS ARE BASED UPON THE NAVD 88 DATUM, AND ARE REFERRED TO THE "TRIMBLE VRSNOW RTK NETWORK".
4. THE COORDINATES AND ELEVATIONS SHOWN HEREON ARE EXPRESSED IN U.S. SURVEY FEET.
5. FIELD SURVEYS WERE CONDUCTED ON MAY 23, 2018.

SHEET INDEX:

1	COVER SHEET
2	SHEET INDEX AND KEY MAP
3	GENERAL NOTES
4	GENERAL NOTES AND LEGEND
5	SUMMARY OF QUANTITIES
6	TYPICAL SECTIONS
7 TO 8	DEMOLITION PLANS
9 TO 11	PLAN AND PROFILE
12	BRIDGE PLAN AND PROFILE
13	BRIDGE DETAILS
14	RETAINING WALL DETAILS
15	RAMP DETAILS

Two working days before you dig CALL NEW MEXICO ONE CALL SYSTEM 260-1990

AS BUILT INFORMATION

	DATE
CONTRACTOR	
WORK STAKED BY	
INSPECTOR'S ACCEPTANCE BY	
FIELD VERIFICATION BY	
DRAWINGS CORRECTED BY	

MICRO-FILM INFORMATION

	DATE
RECORDED BY	
NO.	

BENCH MARKS

SURVEY INFORMATION

FIELD NOTES

NO.	BY	DATE

ENGINEER'S SEAL

ERIC J. FROBERG
NEW MEXICO
18855
PROFESSIONAL ENGINEER

12/07/2018

REVISIONS

NO.	DATE	REMARKS	BY

DESIGN

DESIGNED BY: T.JENSEN DATE: 12/2018
DRAWN BY: T.JENSEN DATE: 12/2018
CHECKED BY: E.FROBERG DATE: 12/2018

TY LIN INTERNATIONAL
engineers | planners | scientists
500 4th Street NW Suite 403F
Albuquerque, NM 87102

CITY OF ALBUQUERQUE
MUNICIPAL DEVELOPMENT DEPARTMENT
ENGINEERING DIVISION

TITLE: **ISOTOPES PARK BRIDGE AND ACCESS ROAD IMPROVEMENTS SHEET INDEX AND KEY MAP**

Design Review Committee	City Engineer Approval	Last Design Update	Mo./Day/Yr.	Mo./Day/Yr.

City Project No.	Zone Map No.	Sheet	Of
7703.74	L15	2	15

GENERAL NOTES

1. THE CONTRACTOR SHALL ABIDE BY ALL LOCAL, STATE, AND FEDERAL LAWS, RULES AND REGULATIONS WHICH APPLY TO THE CONSTRUCTION OF THESE IMPROVEMENTS.

2. ALL WORK DETAILED ON THESE PLANS TO BE PERFORMED, EXCEPT AS OTHERWISE STATED OR PROVIDED HEREON, SHALL BE CONSTRUCTED IN ACCORDANCE WITH CITY OF ALBUQUERQUE STANDARD SPECIFICATIONS FOR PUBLIC WORKS CONSTRUCTION, 1986 EDITION, THROUGH UPDATE #9, AND WILL BE REFERRED TO HEREIN AS "STANDARD SPECIFICATIONS". ADDITIONALLY, NMDOT STANDARD SPECIFICATIONS FOR HIGHWAY AND BRIDGE CONSTRUCTION, 2014 EDITION SHALL BE USED.

3. ALL CONSTRUCTION WITHIN CITY RIGHT-OF-WAY OR EASEMENTS MUST BE DONE FROM APPROVED WORK ORDER DOCUMENTS FROM THE CITY.

4. THE CONTRACTOR SHALL ASSUME THE SOLE AND COMPLETE RESPONSIBILITY FOR THE JOB SITE CONDITIONS DURING THE COURSE OF CONSTRUCTION OF THIS PROJECT, INCLUDING SAFETY OF ALL PERSONS AND PROPERTY. THIS REQUIREMENT SHALL APPLY CONTINUOUSLY AND NOT BE LIMITED TO NORMAL WORKING HOURS. THE CONTRACTOR SHALL DEFEND, INDEMNIFY, AND HOLD HARMLESS THE OWNER AND ENGINEER FROM ANY AND ALL LIABILITY, REAL OR ALLEGED, IN CONNECTION WITH THE PERFORMANCE OF WORK ON THIS PROJECT, EXCEPT LIABILITY ARISING FROM THE SOLE NEGLIGENCE OF THE OWNER OR ENGINEER

5. THE CONTRACTOR SHALL OBTAIN ALL NECESSARY PERMITS PRIOR TO CONSTRUCTION.

6. THE CONTRACTOR SHALL NOTIFY THE CITY SURVEYOR NOT LESS THAN SEVEN (7) DAYS PRIOR TO STARTING WORK IN ORDER THAT THE CITY SURVEYOR MAY TAKE NECESSARY MEASURES TO ENSURE THE PRESERVATION OF SURVEY MONUMENTS. THE CONTRACTOR SHALL NOT DISTURB PERMANENT SURVEY MONUMENTS WITHOUT THE CONSENT OF THE CITY SURVEYOR AND SHALL NOTIFY THE CITY SURVEYOR AND BEAR THE EXPENSE OF REPLACING ANY THAT MAY BE DISTURBED WITHOUT PERMISSION. ONLY THE CITY SURVEYOR SHALL REPLACE SURVEY MONUMENTS. WHEN A CHANGE IS MADE IN THE FINISHED ELEVATIONS OF THE PAVEMENT OF ANY ROADWAY IN WHICH A PERMANENT SURVEY MONUMENT IS LOCATED, THE CONTRACTOR SHALL, AT HIS OWN EXPENSE, ADJUST THE MONUMENT COVER TO THE NEW GRADE UNLESS OTHERWISE SPECIFIED.

7. ALL STREET STRIPING, ALTERED OR DESTROYED, SHALL BE THERMOPLASTIC REFLECTORIZED PAVEMENT MARKINGS TO SAME LOCATION AS EXISTING, OR AS INDICATED BY THIS PLAN SET.

8. SEVEN (7) WORKING DAYS PRIOR TO BEGINNING CONSTRUCTION, THE CONTRACTOR SHALL SUBMIT TO DMD, CONSTRUCTION SERVICES DIVISION, A DETAILED CONSTRUCTION SCHEDULE. THE CONTRACTOR SHALL OBTAIN EXCAVATION AND BARRICADE PERMIT TWO (2) DAYS PRIOR TO CONSTRUCTION.

9. NO PAVING ACTIVITIES SHALL BE STARTED UNTIL THE LOCATION AND SERVICEABILITY OF ALL UNDERGROUND UTILITIES WITHIN THE ROADWAY ARE APPROVED BY THE UTILITY OWNER AND THE CITY.

10. PNM WILL PROVIDE AT NO COST TO THE CITY OR THE CONTRACTOR THE REQUIRED PERSONNEL FOR INSPECTION OR OBSERVATION DEEMED NECESSARY BY PNM WHILE THE CONTRACTOR IS EXPOSING PNM'S CABLES. HOWEVER, THE CONTRACTOR SHALL BE CHARGED THE TOTAL COST ASSOCIATED WITH REPAIRS TO ANY DAMAGED CABLES OR FOR ANY COST ASSOCIATED WITH SUPPORTING OR RELOCATING THE POLES AND CABLES DURING CONSTRUCTION.

11. THE ENGINEER HAS UNDERTAKEN NO FIELD VERIFICATION OF THE LOCATION, DEPTH, SIZE, OR TYPE OF EXISTING UNDERGROUND UTILITY LINES, MAKES NO REPRESENTATION PERTAINING THERETO, AND ASSUMES NO RESPONSIBILITY OR LIABILITY THEREFOR. THE CONTRACTOR SHALL INFORM ITSELF OF THE LOCATION OF ANY UTILITY LINE IN OR NEAR THE AREA OF THE WORK IN ADVANCE OF AND DURING EXCAVATION WORK. THE CONTRACTOR IS FULLY RESPONSIBLE FOR ANY AND ALL DAMAGE CAUSED BY ITS FAILURE TO LOCATE, IDENTIFY, AND PRESERVE ANY AND ALL EXISTING UTILITIES. ANY PREVIOUSLY UNKNOWN UTILITY RELOCATIONS IDENTIFIED BY THE CONTRACTOR AND APPROVED BY THE CITY PROJECT MANAGER SHALL BE COVERED THROUGH THE UTILITY RELOCATION ALLOWANCE ESTABLISHED FOR THIS PROJECT.

12. THE CONTRACTOR IS TO SUPPORT AND MAINTAIN THE INTEGRITY OF ALL UNDERGROUND WATER, WASTEWATER, REUSE WATER, TELEPHONE, ELECTRIC CABLES AND CABLE TELEVISION UTILITIES AT NO ADDITIONAL COST TO THE OWNER. CABLE IS TO BE SUPPORTED AT A MAXIMUM OF EVERY FIFTEEN (15) FEET. THE CONTRACTOR SHALL COORDINATE WITH AND MAKE NECESSARY PAYMENT (IF ANY) TO UTILITY OWNER FOR DE-ENERGIZATION OF CABLES OR SUPPORT OF CABLES BY THE UTILITY OWNER.

13. CONTRACTOR, AT HIS EXPENSE, IS RESPONSIBLE FOR DRAINAGE MANAGEMENT AND EROSION CONTROL AT ALL TIMES DURING THE CONSTRUCTION PERIOD.

14. THE CONTRACTOR, AT HIS EXPENSE, SHALL PROMPTLY CLEAN UP ANY MATERIAL EXCAVATED WITHIN THE PUBLIC RIGHT-OF-WAY OR PRIVATE ROADWAY EASEMENTS SO THAT THE EXCAVATED MATERIAL IS NOT SUSCEPTIBLE TO BEING WASHED DOWN THE STREET OR INTO ANY PUBLIC DRAINAGE FACILITY.

15. CONTRACTOR, AT HIS EXPENSE, SHALL BE RESPONSIBLE TO PROVIDE AND MAINTAIN ALL CONSTRUCTION SIGNING UNTIL THE PROJECT HAS BEEN ACCEPTED BY THE CITY OF ALBUQUERQUE.

16. ALL EXCAVATION, TRENCHING, AND SHORING ACTIVITES MUST BE CARRIED-OUT IN ACCORDANCE WITH OSHA 29 CFR 1926.650 SUBPART P AND COA STD. DWG. 2465.

17. IF A PAVEMENT DROP-OFF IS CREATED DURING THE COURSE OF CONSTRUCTION, THE CONTRACTOR SHALL INITIATE PROTECTIVE ACTION TO MAINTAIN A SMOOTH TRANSITION. THIS WORK SHALL BE CONSIDERED INCIDENTAL TO BID ITEMS 5 & 6.

18. A FOG SEAL COAT SHALL BE APPLIED TO ALL NEW AND EXISTING PAVEMENTS PRIOR TO FINAL STRIPING OF THE PROJECT. LIMITS OF THE COAT SHALL BE THROUGHOUT THE ENTIRE PROJECT AND INCIDENTAL TO BID ITEMS 5 & 6.

19. PRIOR TO CONSTRUCTION, CONTRACTOR SHALL EXCAVATE AND VERIFY THE HORIZONTAL AND VERTICAL LOCATIONS OF ALL POTENTIAL OBSTRUCTIONS. SHOULD A CONFLICT EXIST, THE CONTRACTOR SHALL NOTIFY THE CITY PROJECT MANAGER OR CONSTRUCTION OBSERVER SO THAT THE CONFLICT CAN BE RESOLVED WITH A MINIMUM AMOUNT OF DELAY AND COVERED THROUGH THE UTILITY RELOCATION ALLOWANCE ESTABLISHED FOR THIS PROJECT.

20. ALL ELECTRICAL, TELEPHONE, CABLE TV, GAS AND OTHER UTILITY LINES, CABLES AND APPURTENANCES ENCOUNTERED DURING CONSTRUCTION THAT REQUIRE RELOCATION, SHALL BE COORDINATED WITH THAT UTILITY (SEE UTILITY CONTACT INFORMATION ON SHEET 1). THE CONTRACTOR SHALL BE RESPONSIBLE FOR COORDINATION OF ALL NECESSARY UTILITY ADJUSTMENTS. NO ADDITIONAL COMPENSATION WILL BE ALLOWED FOR DELAYS OR INCONVENIENCES CAUSED BY UTILITY COMPANY WORK CREWS. THE CONTRACTOR MAY BE REQUIRED TO RESCHEDULE HIS ACTIVITIES TO ALLOW UTILITY CREWS TO PERFORM THEIR REQUIRED WORK.

21. DISPOSAL SITE FOR ALL EXCESS EXCAVATION MATERIAL, AND UNSUITABLE MATERIAL SHALL BE OBTAINED BY THE CONTRACTOR IN COMPLIANCE WITH APPLICABLE ENVIRONMENTAL REGULATIONS AND APPROVED BY THE CONSTRUCTION OBSERVER. IDENTIFICATION OF A SITE AND VERIFICATION OF SITE SUITABILITY IS CONSIDERED INCIDENTAL TO PROJECT BID ITEM #28.

22. THE CONTRACTOR IS RESPONSIBLE FOR PROTECTING THE EXISTING UTILITY LINES WITHIN THE CONSTRUCTION AREA. ANY DAMAGE TO EXISTING FACILITIES CAUSED BY CONSTRUCTION ACTIVITY SHALL BE REPAIRED OR REPLACED AT THE CONTRACTOR'S EXPENSE AND APPROVED BY THE CONSTRUCTION OBSERVER.

23. CONSTRUCTION ACTIVITY SHALL BE LIMITED TO THE CITY RIGHT-OF-WAY AND/OR PROJECT LIMITS. ANY DAMAGE TO ADJACENT PROPERTIES RESULTING FROM THE CONSTRUCTION PROCESS IS THE RESPONSIBILITY OF THE CONTRACTOR. ANY COSTS INCURRED FOR REPAIRS SHALL BE THE COST OF THE CONTRACTOR.

24. OVERNIGHT PARKING OF CONSTRUCTION EQUIPMENT SHALL NOT OBSTRUCT DRIVEWAYS OR DESIGNATED TRAFFIC LANES. THE CONTRACTOR SHALL NOT STORE ANY EQUIPMENT OR MATERIAL WITHIN THE PUBLIC RIGHT-OF-WAY.

25. THE CONTRACTOR SHALL BE RESPONSIBLE TO REPLACE AT HIS EXPENSE ANY AND ALL PROPERTY CORNERS DESTROYED DURING CONSTRUCTION. ALL PROPERTY CORNERS MUST BE RESET BY A REGISTERED LAND SURVEYOR.

26. ALL BARRICADES AND CONSTRUCTION SIGNING SHALL CONFORM TO APPLICABLE SECTIONS OF THE M.U.T.C.D., U.S. DEPARTMENT OF TRANSPORTATION, LATEST EDITION.

27. THE CONTRACTOR SHALL MAINTAIN ALL CONSTRUCTION BARRICADES AND SIGNING AT ALL TIMES. THE CONTRACTOR SHALL VERIFY THE PROPER LOCATION OF ALL BARRICADING AT THE END AND BEGINNING OF EACH DAY.

28. THE CONTRACTOR SHALL ASSUME RESPONSIBILITY FOR ANY DAMAGE TO EXISTING PAVEMENTS, PAVEMENT MARKINGS, SIGNAGE, CURB & GUTTER, DRIVEPADS, ADA CURB RAMPS, AND SIDEWALK DURING CONSTRUCTION, APART FROM THOSE SECTIONS INDICATED FOR REMOVAL ON THE PLANS AND SHALL REPAIR OR REPLACE PER COA STANDARDS, AT HIS OWN EXPENSE.

29. CONTRACTOR MUST OBTAIN A TOPSOIL DISTURBANCE PERMIT FROM THE ENVIRONMENTAL HEALTH DIVISION PRIOR TO CONSTRUCTION.

30. THE CONTRACTOR SHALL CONFORM TO ALL CITY, COUNTY, STATE AND FEDERAL DUST CONTROL MEASURES AND REQUIREMENTS AND WILL BE RESPONSIBLE FOR PREPARING AND OBTAINING ALL NECESSARY APPLICATIONS AND APPROVALS. THIS WORK SHALL BE INCIDENTAL TO BID ITEM #29.

31. GUARDS/POSITIVE PROTECTION SHALL BE LOCATED ALONG OPEN-SIDED WALKING SURFACES THAT ARE LOCATED MORE THAN 30 INCHES MEASURED VERTICALLY TO THE FLOOR OR GRADE BELOW AT ANY POINT WITHIN 36 INCHES HORIZONTALLY TO THE EDGE OF THE OPEN SIDE. GUARDS SHALL BE IN ACCORDANCE WITH SECTION 1013 OF THE 2009 IBC. IF THIS SITUATION OCCURS THE CONTRACTOR SHALL NOTIFY THE CITY PROJECT MANAGER PRIOR TO PROCEEDING.

32. CONTRACTOR SHALL TRANSPORT ALL REMOVED AND SALVAGED SIGNS TO PINO YARD OR LOCATION DIRECTED BY THE CITY'S PROJECT MANAGER AT NO ADDITIONAL COST.

33. ALL WORK SITES SHALL BE MAINTAINED GRAFFITI-FREE. UPON NOTIFICATION OF GRAFFITI FOUND ON WORK SITE, INCLUDING CONTRACTOR'S EQUIPMENT, FACILITIES, AND APPURTENANCES, AND ANY AND ALL BARRICADING AND SIGNAGE ASSOCIATED WITH THE PROJECT, CONTRACTOR SHALL HAVE 24 HOURS TO BEGIN REMOVAL OF ALL GRAFFITI. GRAFFITI REMOVAL SHALL CONTINUE EXPEDITIOUSLY UNTIL COMPLETED. IF CONTRACTOR FAILS TO BEGIN OR COMPLETE GRAFFITI REMOVAL, THE GRAFFITI MAY BE REMOVED BY THE CITY AT CONTRACTOR'S SOLE COST.

34. ALL SIDEWALKS, TRAILS, AND CURB RAMPS SHALL BE INSTALLED IN ACCORDANCE WITH THE PROPOSED ACCESSIBILITY GUIDELINES FOR PEDESTRIAN FACILITIES IN THE PUBLIC RIGHT-OF-WAY. ALL DETECTABLE WARNING SURFACE (TRUNCATED DOMES) ARE CONSIDERED INCIDENTAL TO BID ITEM #9.

35. WARPING OF SLOPES: THE CONTRACTOR SHALL WARP SLOPES WHERE NECESSARY TO STAY WITHIN THE RIGHT OF WAY OR TEMPORARY CONSTRUCTION EASEMENT LIMITS, SUBJECT TO THE APPROVAL OF THE CITY PROJECT MANAGER.

36. BEFORE SCHEDULING DELIVERY OF CONCRETE, CONTRACTOR SHALL MEET WITH CITY INSPECTOR/PROJECT MANAGER TO ENSURE THE CONCRETE FORMWORK IS CONSTRUCTED TO DIMENSIONS AND GRADES SHOWN ON PLANS AND MEETS PROWAG, 2011 TECHNICAL DESIGN CRITERIA. CONTRACTOR SHALL CALIBRATE 24" ELECTRONIC DIGITAL LEVEL PRIOR TO VERIFYING MEASUREMENTS. CONTRACTOR SHALL VERIFY MEASUREMENTS MEET REQUIREMENTS OR REQUIRE CORRECTION OF ALL DISCREPANCIES BEFORE SCHEDULING OF CONCRETE TO ENSURE THE FINISHED CONCRETE WILL MEET PROWAG REQUIREMENTS. WHEN ALL MEASUREMENTS MEET REQUIREMENTS THEN THE INSPECTOR SHALL PERMIT CONCRETE POUR. CONTRACTOR SHALL REPEAT THE PROCEDURE AFTER CONCRETE POUR TO ENSURE THE CURB RAMP MEETS PROWAG COMPLIANCE. FINAL ACCEPTANCE OF A CURB RAMP DOES NOT OCCUR UNTIL THE FINAL INSPECTION OF THE PROJECT. THIS PROCEDURE SHALL BE CONSIDERED INCIDENTAL TO BID ITEM #9.

37. CONTRACTOR TO TEST SUBGRADE R-VALUE PRIOR TO CONSTRUCTION. IN THE EVENT THE R-VALUE IS LESS THAN 65, REMOVE 2 FEET OF SUBGRADE MATERIAL AND IMPORT MATERIAL WITH R-VALUE GREATER THAN 65 OR CONTACT THE ENGINEER IMMEDIATELY SO THE PAVEMENT SECTION CAN BE MODIFIED.

38. BASE COURSE SHALL BE REQUIRED UNDER (AND 12" BEHIND) THE PROPOSED CURB & GUTTER PER COA DWG 2405B.

39. BASE COURSE SHALL BE REQUIRED UNDER (AND 12" BEHIND) THE PROPOSED CURB & GUTTER PER COA DWG 2405B.

40. AS-BUILTS: THE CONTRACTOR SHALL MAINTAIN AN UP TO DATE SET OF AS-BUILT PLANS FOR THE PROJECT. THESE PLANS SHALL BE KEPT CURRENT, WITHIN TWO WEEKS, AT ALL TIMES AND SHALL BE SUBJECT TO REVIEW BY THE PROJECT ENGINEER THROUGHOUT THE PROJECT AND WILL BE REVIEWED BY THE PROJECT ENGINEER FOR ACCURACY AND COMPLETENESS AT LEAST ONCE EVERY 30 DAYS. THE FINAL AS-BUILT PLANS SHALL BE SUBMITTED AND ACCEPTED BY THE CITY PROJECT MANAGER PRIOR TO FINAL PAYMENT.

41. CONTRACTOR, AT HIS EXPENSE, SHALL PROTECT EXISTING LANDSCAPING DURING CONSTRUCTION. IN AREAS OF SIDEWALK REALIGNMENT, THE LANDSCAPING MATERIAL IN THE AREA IDENTIFIED FOR NEW SIDEWALK SHALL BE RELOCATED TO THE AREA PREVIOUSLY OCCUPIED BY THE SIDEWALK OR ADJACENT TO NEW SIDEWALK WHERE SIDEWALK DOES NOT CURRENTLY EXIST. IN AREAS WHERE TURF REMOVAL IS NEEDED FOR SIDEWALK INSTALLATION, THE TURF SHALL BE REMOVED TO A NEAT, CLEAN EDGE. ANY EXISTING IRRIGATION (MAINLINES, SPRINKLERS, AND DRIP IRRIGATION) SHALL BE RELOCATED AS NECESSARY TO MAINTAIN IRRIGATION.

42. CONTRACTOR SHALL BE RESPONSIBLE FOR THE IDENTIFICATION, PROTECTION, AND/OR RELOCATION OF ANY IMPACTED PRIVATE IRRIGATION LINES WITHIN CITY ROW AND WITHIN PRIVATE PROPERTY. PRIVATE IRRIGATION SHALL INCLUDE BUT NOT BE LIMITED TO MAINLINES, SPRINKLERS, RISERS, DRIPPERS, ETC. PRIVATE IRRIGATION IDENTIFICATION, PROTECTION, AND/OR RELOCATION SHALL BE COVERED THROUGH THE UTILITY RELOCATION ALLOWANCE ESTABLISHED FOR THIS PROJECT.

43. VIBRATION MONITORING AND VIDEO TAPING DOCUMENTATION SHALL BE PERFORMED IN AND AROUND ALL STRUCTURES. "STRUCTURE" IS DEFINED AS BUILDINGS, RETAINING AND PRIVACY WALLS, END WALLS, DROP INLETS, CATCH BASINS, SEWER AND SERVICE PIPES, DRAINS AND OTHER FEATURES THAT MAY BE ENCOUNTERED DURING CONSTRUCTION. THE CONSTRUCTION AREA AND AREAS ADJACENT TO THE LIMITS OF CONSTRUCTION SHALL ALSO BE VIDEO TAPED. VIBRATION MONITORING AND VIDEO TAPING DOCUMENTATION SHALL BE PAID FOR AS A SEPARATE LUMP SUM PAY ITEM UNDER THE APPROPRIATE SPECIFICATION(S) LISTED ABOVE.

44. CONTRACTOR SHALL CUT, CAP AND/OR SPLICE THE EXISTING IRRIGATION LINES IN AREAS OF TREE REMOVAL, AS SPECIFIED BY THE PROJECT MANAGER. THE PROTECTION AND MODIFICATION OF EXISTING IRRIGATION LINES HALL BE INCIDENTAL TO BID ITEM #1, AND NO OTHER PAYMENTS SHALL BE MADE.

45. CONTRACTOR SHALL BE RESPONSIBLE FOR THE IDENTIFICATION, PROTECTION, AND RELOCATION OF ANY IMPACTED IRRIGATION LINES WITHIN THE PROJECT IMPROVEMENT LIMITS AND/OR IDENTIFIED ON THE PLANS. IRRIGATION LINES SHALL INCLUDE BUT NOT BE LIMITED TO MAINLINES, SPRINKLERS, RISERS, DRIPPERS, ETC. IRRIGATION LINE IDENTIFICATION, PROTECTION, AND RELOCATION SHALL BE INCIDENTAL TO BID ITEM #23.

AS BUILT INFORMATION

	DATE
CONTRACTOR	
WORK STAKED BY	DATE
SURVEYED BY	
ACCEPTANCE BY	DATE
FIELD VERIFICATION BY	DATE
DRAWINGS CORRECTED BY	DATE

MICRO-FILM INFORMATION

	DATE
RECORDED BY	
NO.	

BENCH MARKS

SURVEY INFORMATION

FIELD NOTES

NO.	BY	DATE

ENGINEER'S SEAL

ERIC J. FROBERG
NEW MEXICO
18855
PROFESSIONAL ENGINEER

12/07/2018

NO.	DATE	REMARKS	BY

REVISIONS

DESIGN

DESIGNED BY: T.JENSEN DATE: 12/2018
DRAWN BY: T.JENSEN DATE: 12/2018
CHECKED BY: E.FROBERG DATE: 12/2018

TY LIN INTERNATIONAL
engineers | planners | scientists
500 4th Street NW Suite 403F
Albuquerque, NM 87102

CITY OF ALBUQUERQUE
MUNICIPAL DEVELOPMENT DEPARTMENT
ENGINEERING DIVISION

TITLE: **ISOTOPES PARK BRIDGE AND ACCESS ROAD IMPROVEMENTS GENERAL NOTES**

Design Review Committee	City Engineer Approval	Last Design Update	Mo./Day/Yr.	Mo./Day/Yr.

City Project No.	Zone Map No.	Sheet	Of
7703.74	L15	3	15

LEGEND

- BENCHMARK
- CONSTRUCTION CENTER LINE
- COMBINED CURB & GUTTER/MEDIAN CURB – COA DETAIL 2415A/2415B
- EXISTING R/W
- EXISTING ROADWAY ASPHALT CONCRETE PAVEMENT
- NEW MULTI–USE TRAIL ASPHALT CONCRETE PAVEMENT
- EXISTING CONCRETE PAVEMENT OR SIDEWALK
- EXISTING CONCRETE CHANNEL LINING TO BE DEMOLISHED
- PROPOSED CONCRETE CHANNEL LINING AND NOTCH
- EXISTING ASPHALT MULTI–USE TRAIL
- EXISTING ASPHALT MULTI–USE TRAIL TO BE DEMOLISHED
- CONCRETE MEDIAN PAVING PER C.O.A. DETAIL 2408/2502
- NEW CONCRETE SIDEWALK RAMP – C.O.A. DETAIL 2440/2441
- EXISTING WATER MARKER
- EXISTING FIRE HYDRANT
- EXISTING WATER VALVE
- EXISTING WATER METER
- EXISTING WATER MANHOLE
- EXISTING STORM DRAIN MANHOLE
- EXISTING STORM DROP INLET
- EXISTING SEWER MANHOLE
- EXISTING TREE
- EXISTING ELECTRICAL PULL BOX
- EXISTING ELECTRICAL BOX/TRANSFORMER
- EXISTING ELECTRICAL POWER POLE
- EXISTING ELECTRICAL GUY ANCHOR
- EXISTING TELEPHONE PEDESTAL
- EXISTING TELEPHONE PULL BOX
- EXISTING TELEPHONE MANHOLE
- EXISTING FIBER OPTIC PEDESTAL
- EXISTING CATV PEDESTAL
- EXISTING TRAFFIC SIGNAL CABINET
- EXISTING TRAFFIC PULLBOX
- EXISTING TRAFFIC SIGNAL AND POLE MAST
- EXISTING GAS METER
- EXISTING GAS VALVE
- EXISTING WALL
- EXISTING FENCE/RAIL
- EXISTING WIRE FENCE
- EXISTING GUARD RAIL
- EXISTING SINGLE AND DOUBLE POST SIGN
- EXISTING POST OR BOLLARD
- EXISTING LIGHT POLE
- T — EXISTING TELEPHONE LINE
- FO — EXISTING FIBER OPTIC LINE
- GAS — EXISTING GAS LINE
- W — EXISTING WATER LINE
- CTV — EXISTING CABLE TELEVISION LINE
- E — EXISTING UNDERGROUND ELECTRIC LINE
- OHE — EXISTING OVERHEAD POWER LINE
- SS — EXISTING SANITARY SEWER LINE
- SD — EXISTING STORM DRAIN LINE

ABBREVIATIONS DEFINITIONS

ABCWUA	ALBUQUERQUE BERNALILLO COUNTY WATER UTILITY AUTHORITY
AMAFCA	ALBUQUERQUE METROPOLITAN ARROYO FLOOD CONTROL AUTHORITY
COA	CITY OF ALBUQUERQUE
TC	TOP OF CURB
BC	BACK OF CURB
EX	EXISTING
P	PAVEMENT ELEVATION AT FINISHED GRADE
ROW	RIGHT OF WAY
TCE	TEMPORARY CONSTRUCTION EASEMENT

AS BUILT INFORMATION

	DATE
CONTRACTOR	
WORK STAKED BY	
CONSTRUCTION ACCEPTANCE BY	
FIELD VERIFICATION BY	
DRAWINGS CORRECTED BY	

MICRO–FILM INFORMATION

	DATE
RECORDED BY	
NO.	

BENCH MARKS

SURVEY INFORMATION

FIELD NOTES

NO.	BY	DATE

ENGINEER'S SEAL

ERIC J. FROBERG
NEW MEXICO
18855
PROFESSIONAL ENGINEER

12/07/2018

NO.	DATE	REMARKS	BY

REVISIONS

DESIGN

DESIGNED BY:	T.JENSEN	DATE: 12/2018
DRAWN BY:	T.JENSEN	DATE: 12/2018
CHECKED BY:	E.FROBERG	DATE: 12/2018

Two working days before you dig
CALL NEW MEXICO ONE CALL SYSTEM
260-1990

TY LIN INTERNATIONAL
engineers | planners | scientists
500 4th Street NW Suite 403F
Albuquerque, NM 87102

CITY OF ALBUQUERQUE
MUNICIPAL DEVELOPMENT DEPARTMENT
ENGINEERING DIVISION

TITLE: **ISOTOPES PARK BRIDGE AND ACCESS ROAD IMPROVEMENTS GENERAL NOTES AND LEGEND**

Design Review Committee	City Engineer Approval	Last Design Update	Mo./Day/Yr.	Mo./Day/Yr.

City Project No.	Zone Map No.	Sheet	Of
7703.74	L15	4	15

ESTIMATED QUANTITIES					SHEETS				
BID ID NO.	ITEM ID NO.	ITEM DESCRIPTION	UNIT	TOTAL	7	8	9	10	11
1	201.0X	TREES, <12" CIRCUMFRENCE, REMOVE & DISPOSE, COMPL.	EA	3	–	3	–	–	–
2	201.0X	REMOVE AND DISPOSE EXISTING GRAVEL	SF	216	–	216	–	–	–
3	301.02	SUBGRADE PREP. 12" AT 95% COMPACTION, CIP.	SY	50	–	–	50	–	–
4	302.01X	AGGREGATE BASE COURSE, CRUSHED, 7" AT 95% COMPACTION, CIP. SD 2408	SY	50	–	–	50	–	–
5	336.021	ASPHALT CONCRETE, 1-1/2 INCH THICK, SUPERPAVE	SY	50	–	–	50	–	–
6	336.022	ASPHALT CONCRETE, 2 INCH THICK, SUPERPAVE	SY	50	–	–	50	–	–
7	336.12	TACK COAT, CATIONIC EMULSIFIED ASPHALT, CIP.	SY	50	–	–	50	–	–
8	337.0X	CONCRETE PAVEMENT, 6" THICK, PORTLAND CONCRETE CEMENT, CIP.	SY	32	–	–	–	28	4
9	340.01	SIDEWALK, 4" THICK, PORTLAND CEMENT CONCRETE, INCL. SUBGRADE COMPACTION, CIP. SD 2430	SY	93	–	–	–	49	44
10	340.XX	CONCRETE STAIRS PER DETAILS ON PROJECT PLANS, CIP.	LF	20	–	–	–	20	–
11	340.06	CURB & GUTTER, MEDIAN, PORTLAND CEMENT CONCRETE, CIP. SD 2408	LF	115	–	–	115	–	–
12	340.11	HEADER CURB, PORTLAND CEMENT CONCRETE, INCL. SUBGRADE, CIP. SD 2415	LF	71	–	–	71	–	–
13	343.02	EXISTING PAVEMENT, ASPHALT CONCRETE, UP TO 4" THICK, SAWCUT, REMOVE & DISPOSE, COMPL.	SY	26	26	–	–	–	–
14	343.04	EXISTING PAVEMENT, PC CONCRETE, UP TO 8" THICK, SAWCUT, REMOVE & DISPOSE, COMPL.	SY	125	17	108	–	–	–
15	343.08	EXISTING CURB & GUTTER OR VALLEY GUTTER, PC CONCRETE, REMOVE & DISPOSE, COMPL.	LF	71	71	–	–	–	–
16	410.01X	PEDESTRIAN RAILING, PER DETAILS ON PROJECT PLANS, CIP.	LF	66	–	–	–	66	–
17	410.03X	EXISTING PEDESTRIAN RAILING, REMOVE AND REINSTALL PER DETAILS ON PROJECT PLANS, CIP.	LF	119	–	119	–	–	–
18	450.101X	SIGN, POST, & BASE POST, REMOVE & RELOCATE, COMPL.	EA	2	–	2	–	–	–
19	510.11	STRUCTURAL, REINFORCED PC CONCRETE, 3500 PSI, INCL. FORMWORK ,CIP.	CY	6	–	–	–	–	–
20	520.01	STRUCTURAL STEEL, FABRICATED, INCL. WELDING, CUTTING, DRILLING, ETC., CIP.	LB	257	–	–	–	–	–
21	540.60	STRUCTURAL REINFORCING BARS (GR 60)	LB	593	–	–	–	–	–
22	540.03X	EXISTING CONCRETE RETAINING WALL, REMOVE AND DISPOSE, COMPL.	LF	4	4	–	–	–	–
23	1001.XX	EXISTING IRRIGATION SYSTEM RELOCATIONS	LS	1	–	–	–	–	–
24	1001.XX	EXISTING ELECTRICAL UTILITY RELOCATIONS	LS	1	–	–	–	–	–
25	4.010	CONSTRUCTION STAKING, COMPL.	LS	1	–	–	–	–	–
26	1600.001	VIBRATION MONITORING AND DIGITAL VIDEO RECORDING	LS	1	–	–	–	–	–
27	--	LIFTING OR JACKING PLAN AND OPERATION	LS	1	–	–	–	–	–
28	205.01	BORROW, HAULING & COMPACTION OF SUITABLE FILL MATERIAL WHEN NOT OBTAINED FROM WITHIN LIMITS OF CONSTRUCTION, COMPL.	CY	22	–	–	–	–	–
29	6.050	MOBILIZATION	LS	1	–	–	–	–	–

STRUCTURAL STEEL ITEMS		
ITEM DESCRIPTION	UNIT	TOTAL
PLATE, 1/2"	LB	61
HSS, 4 X 6 X 3/16	LB	89
ANGLE, 2 X 2 X 3/16	LB	105
BOLTS, 1/2"	LB	0.4

Two working days before you dig
CALL NEW MEXICO ONE CALL SYSTEM
260-1990

AS BUILT INFORMATION
CONTRACTOR DATE
WORK STAKED BY DATE
SURVEY CHECKS BY DATE
ACCEPTANCE BY DATE
FIELD VERIFICATION BY DATE
DRAWINGS CORRECTED BY DATE
MICRO-FILM INFORMATION
RECORDED BY DATE
NO.

BENCH MARKS

SURVEY INFORMATION
FIELD NOTES
NO. BY DATE

ENGINEER'S SEAL
ERIC J. FROBERG
NEW MEXICO
18855
PROFESSIONAL ENGINEER
12/07/2018

NO.	DATE	REMARKS	BY

REVISIONS
DESIGN
DESIGNED BY: T.JENSEN DATE: 12/2018
DRAWN BY: T.JENSEN DATE: 12/2018
CHECKED BY: E.FROBERG DATE: 12/2018

TY LIN INTERNATIONAL
engineers | planners | scientists
500 4th Street NW Suite 403F
Albuquerque, NM 87102

CITY OF ALBUQUERQUE
MUNICIPAL DEVELOPMENT DEPARTMENT
ENGINEERING DIVISION

TITLE: **ISOTOPES PARK BRIDGE AND ACCESS ROAD IMPROVEMENTS SUMMARY OF QUANTITIES**

Design Review Committee | City Engineer Approval | Last Design Update | Mo./Day/Yr. | Mo./Day/Yr.

City Project No. 7703.74 | Zone Map No. L15 | Sheet 5 Of 15

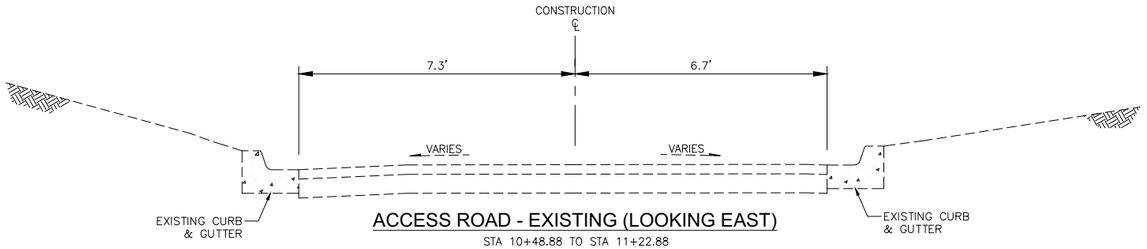

ACCESS ROAD - EXISTING (LOOKING EAST)

STA 10+48.88 TO STA 11+22.88

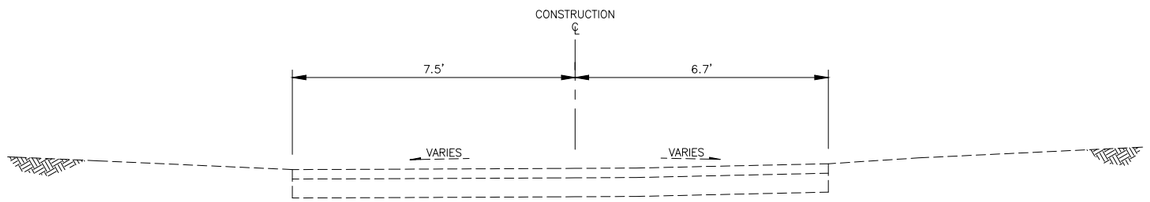

ACCESS ROAD - EXISTING (LOOKING EAST)

STA 11+22.88 TO STA 11+70.18

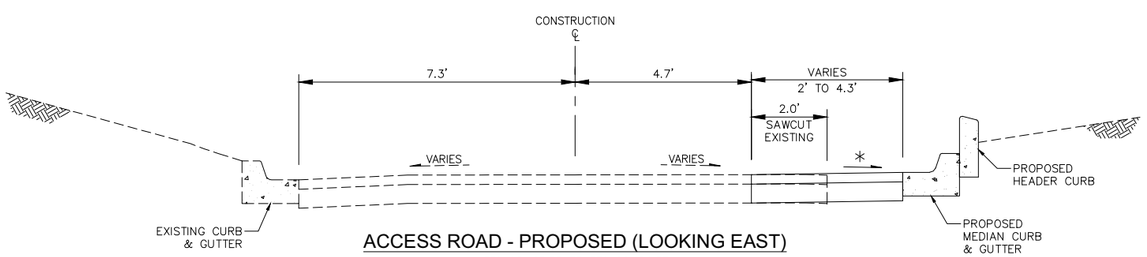

ACCESS ROAD - PROPOSED (LOOKING EAST)

STA 10+48.88 TO STA 11+24.37

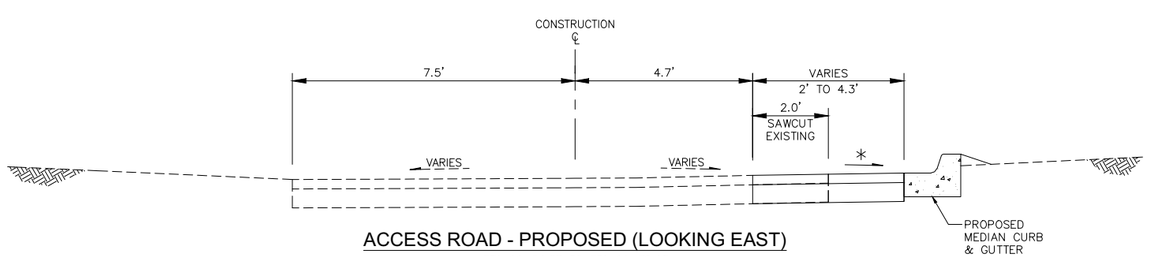

ACCESS ROAD - PROPOSED (LOOKING EAST)

STA 11+24.37 TO STA 11+70.18

* 1.5% TYP.
2.0% MAX.

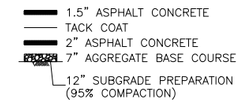

PAVEMENT STRUCTURAL SECTION A

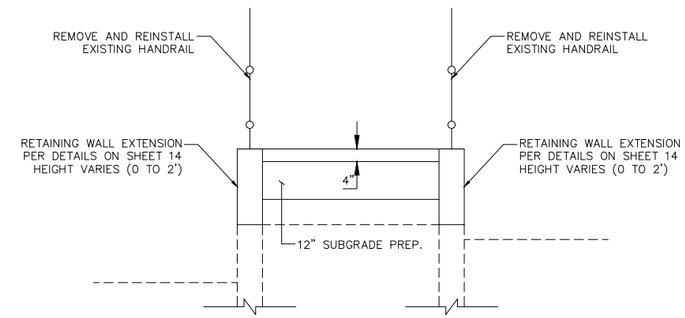

NORTH RAMP - PROPOSED (LOOKING NORTH)

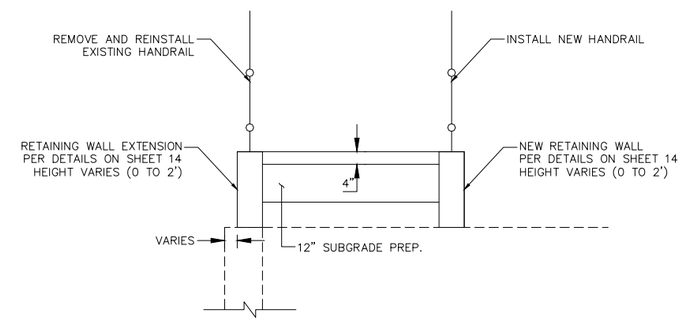

SOUTH RAMP - PROPOSED (LOOKING EAST)

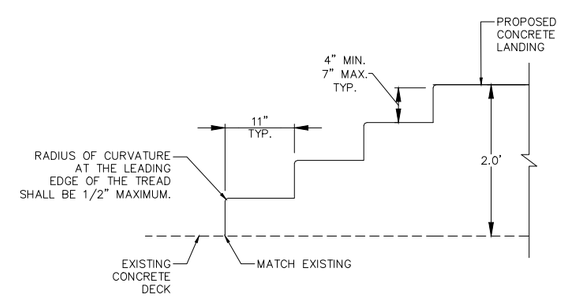

PROPOSED STAIRS DETAIL

*NOTE: STAIRWAYS SHALL COMPLY WITH PROWAG SECTION R408.

Two working days before you dig CALL NEW MEXICO ONE CALL SYSTEM 260-1990

TY LIN INTERNATIONAL
engineers | planners | scientists
500 4th Street NW Suite 403F
Albuquerque, NM 87102

CITY OF ALBUQUERQUE
MUNICIPAL DEVELOPMENT DEPARTMENT
ENGINEERING DIVISION

TITLE: **ISOTOPES PARK BRIDGE AND ACCESS ROAD IMPROVEMENTS TYPICAL SECTIONS**

Design Review Committee	City Engineer Approval	Last Design Update	Mo./Day/Yr.	Mo./Day/Yr.

City Project No.	Zone Map No.	Sheet	Of
7703.74	L15	6	15

AS BUILT INFORMATION
CONTRACTOR DATE
WORK STAKED BY DATE
INSPECTOR'S ACCEPTANCE BY DATE
FIELD VERIFICATION BY DATE
DRAWINGS CORRECTED BY DATE
MICRO-FILM INFORMATION
RECORDED BY DATE
NO.

BENCH MARKS

SURVEY INFORMATION
FIELD NOTES
NO. BY DATE

ENGINEER'S SEAL
ERIC J. FROBERG NEW MEXICO 18855 PROFESSIONAL ENGINEER
12/07/2018

REVISIONS
NO. DATE REMARKS BY

DESIGN
DESIGNED BY: T.JENSEN DATE: 12/2018
DRAWN BY: T.JENSEN DATE: 12/2018
CHECKED BY: E.FROBERG DATE: 12/2018

EXISTING ELEVATION @ SAWCUT LINE				
POINT NO.	STATION/OFFSET	EXISTING ELEVATION	NORTHING	EASTING
1	10+48.88, 7.0' RT	5115.53±	1481655.025	1527245.108
2	10+48.81, 5.0' RT	5115.60±	1481657.006	1527244.834
3	10+50.00, 4.9' RT	5115.43±	1481657.162	1527246.019
4	10+60.00, 4.9' RT	5114.11±	1481657.703	1527255.465
5	10+70.00, 4.8' RT	5112.82±	1481657.116	1527264.855
6	10+80.00, 4.7' RT	5111.40±	1481655.983	1527274.792
7	10+90.00, 4.8' RT	5109.94±	1481654.543	1527284.689
8	11+00.00, 5.1' RT	5108.56±	1481652.744	1527294.144
9	11+10.00, 5.0' RT	5107.34±	1481650.460	1527303.461
10	11+20.00, 5.0' RT	5106.71±	1481647.498	1527312.590
11	11+30.00, 5.0' RT	5106.16±	1481643.704	1527321.409
12	11+40.00, 4.8' RT	5105.60±	1481639.370	1527329.983
13	11+50.00, 4.3' RT	5105.04±	1481634.693	1527338.423
14	11+51.24, 4.2' RT	5104.98±	1481634.090	1527339.463
15	11+50.87, 6.2' RT	5105.01±	1481632.623	1527338.004
16	11+53.82, 4.0' RT	5104.92±	1481632.798	1527341.613
17	11+53.52, 6.0' RT	5104.93±	1481631.362	1527340.203
18	11+60.00, 3.9' RT	5104.96±	1481629.203	1527346.396
19	11+68.56, 3.7' RT	5104.94±	1481623.892	1527353.096
20	11+70.18, 5.8' RT	5105.03±	1481621.286	1527353.065

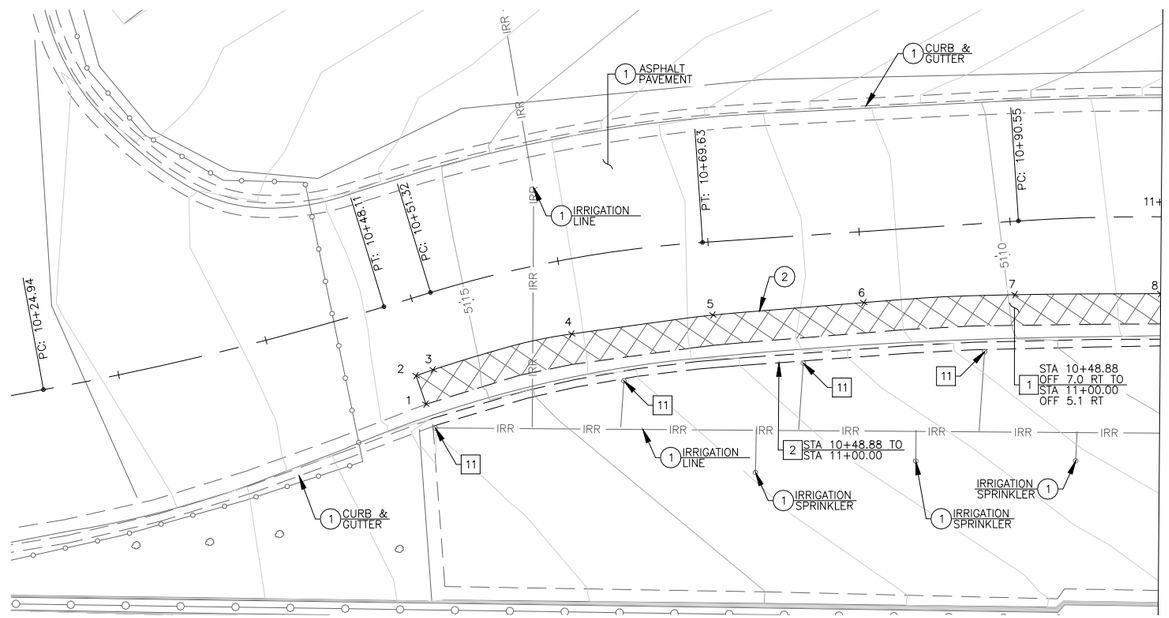

5' 2.5' 0 5'

SCALE HORIZ: 1"= 5'

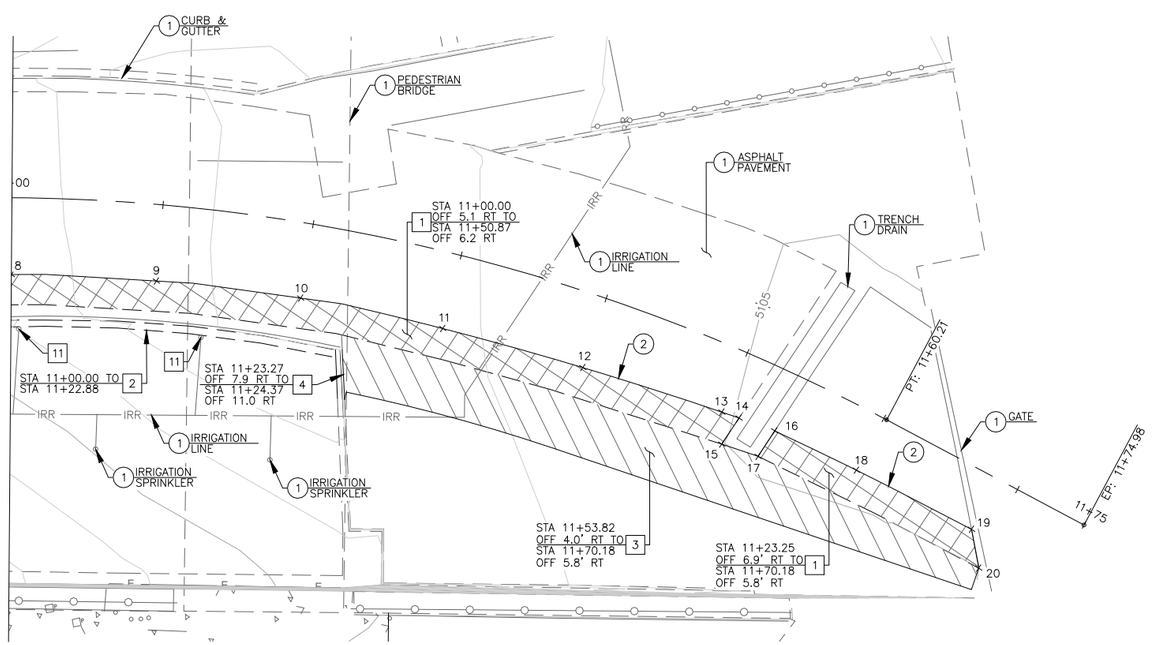

REMOVAL/RELOCATE

1	REMOVE AND DISPOSE EXISTING ASPHALT PAVEMENT	26 SY
2	REMOVE AND DISPOSE EXISTING CURB AND GUTTER	71 LF
3	REMOVE AND DISPOSE EXISTING CONCRETE PAVEMENT	17 SY
4	REMOVE EXISTING CONCRETE WALL	4 LF
11	REMOVE AND RELOCATE EXISTING IRRIGATION SPRINKLER	

CONSTRUCTION NOTES

1. PROTECT IN PLACE
2. SAWCUT AND MATCH EXISTING

EXISTING ASPHALT PAVEMENT TO BE REMOVED

EXISTING CONCRETE PAVEMENT TO BE REMOVED

Two working days before you dig CALL NEW MEXICO ONE CALL SYSTEM 260-1990

TY LIN INTERNATIONAL
engineers | planners | scientists
500 4th Street NW Suite 403F
Albuquerque, NM 87102

AS BUILT INFORMATION: CONTRACTOR / WORK STAKED BY / SURVEY CHECKS / ACCEPTANCE BY / FIELD VERIFICATION BY / DRAWINGS CORRECTED BY — DATE

MICRO-FILM INFORMATION: RECORDED BY / NO. — DATE

BENCH MARKS

SURVEY INFORMATION

FIELD NOTES

NO.	BY	DATE

ENGINEER'S SEAL

ERIC J. FROBERG NEW MEXICO 18855 PROFESSIONAL ENGINEER

12/07/2018

NO.	DATE	REMARKS	BY

REVISIONS

DESIGN

DESIGNED BY: T.JENSEN DATE: 12/2018

DRAWN BY: T.JENSEN DATE: 12/2018

CHECKED BY: E.FROBERG DATE: 12/2018

CITY OF ALBUQUERQUE
MUNICIPAL DEVELOPMENT DEPARTMENT
ENGINEERING DIVISION

TITLE: **ISOTOPES PARK BRIDGE AND ACCESS ROAD IMPROVEMENTS**
DEMOLITION PLAN - ACCESS ROAD

Design Review Committee	City Engineer Approval	Last Design Update	Mo./Day/Yr.	Mo./Day/Yr.

City Project No.	Zone Map No.	Sheet	Of
7703.74	L15	7	15

EXISTING ELEVATION @ SAWCUT LINE				
POINT NO.	STATION/OFFSET	EXISTING ELEVATION	NORTHING	EASTING
30	1+21.52, 3.0' LT	5119.64±	1481640.443	1527245.493
31	1+21.52, 3.0' RT	5119.65±	1481634.574	1527244.247
32	1+26.54, 7.0' RT	5119.81±	1481629.641	1527248.337
33	1+34.72, 6.9' RT	5120.04±	1481628.030	1527256.355
34	1+34.72, 3.7' RT	5120.11±	1481631.188	1527257.023
35	1+78.01, 3.7' RT	5119.84±	1481622.231	1527299.390
36	1+89.03, 1.7' RT	5119.87±	1481621.936	1527310.589
37	1+91.78, 1.7' RT	5119.78±	1481621.377	1527313.281
38	1+91.78, 2.9' LT	5119.97±	1481625.816	1527314.203

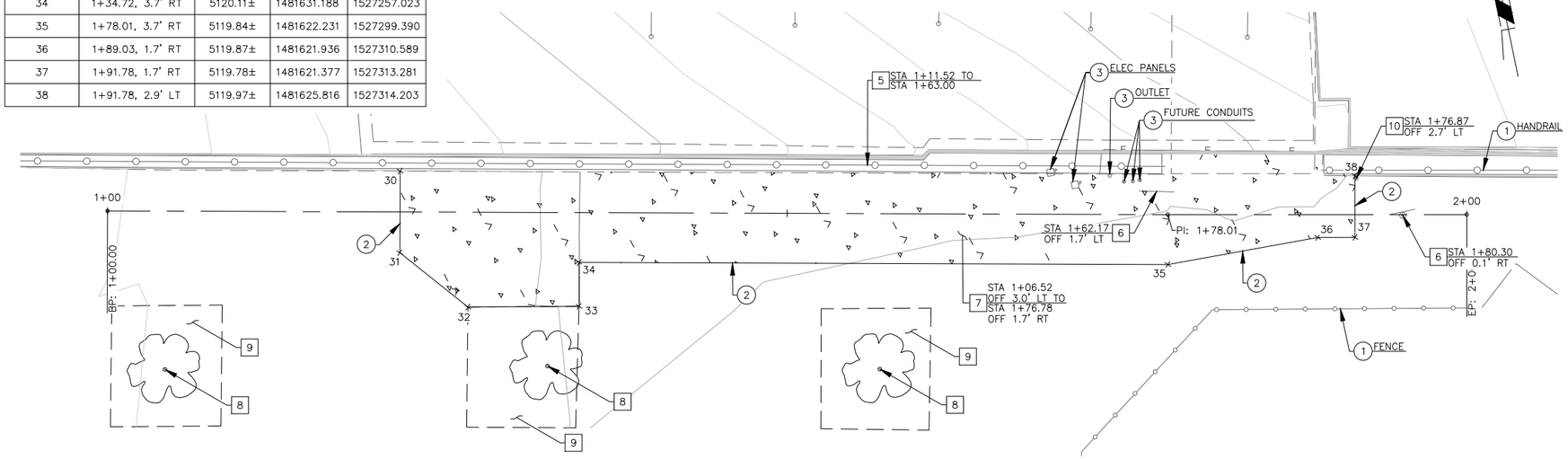

EXISTING ELEVATION @ SAWCUT LINE				
POINT NO.	STATION/OFFSET	EXISTING ELEVATION	NORTHING	EASTING
60	2+90.34, 4.9' RT	5121.82±	1481704.515	1527327.313
61	3+03.92, 5.1' RT	5122.10±	1481718.093	1527327.494
62	3+03.78, 15.0' RT	5122.06±	1481717.962	1527337.328
63	3+04.78, 15.0' RT	5122.08±	1481718.962	1527337.341
64	3+09.92, 5.2' RT	5122.23±	1481724.093	1527327.507
65	3+10.07, 5.2' LT	5122.23±	1481724.232	1527317.116
66	2+91.50, 5.6' LT	5121.77±	1481705.667	1527316.736
67	2+71.58, 6.2' LT	5122.34±	1481687.404	1527312.691
68	2+71.68, 5.9' RT	5122.33±	1481685.008	1527324.493
69	2+79.64, 6.9' RT	5122.11±	1481692.580	1527327.154

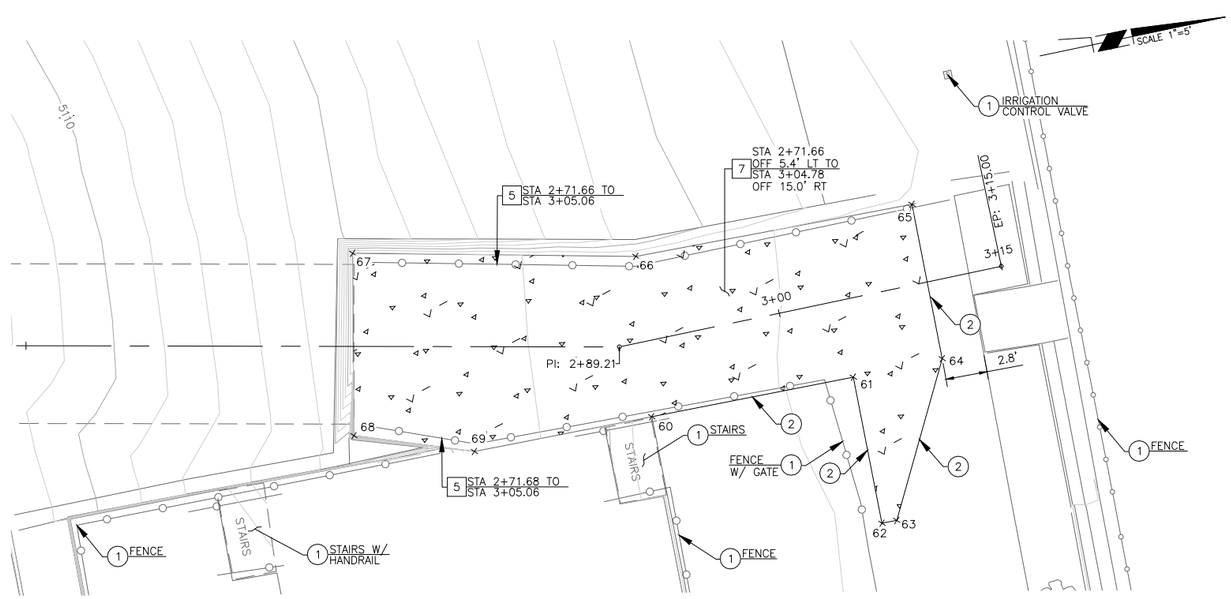

REMOVAL/RELOCATE

5	REMOVE AND REINSTALL EXISTING HANDRAIL ON TOP OF RETAINING WALL & RAMP	119 LF
6	REMOVE AND RELOCATE EXISTING SIGN	2 EA
7	REMOVE AND DISPOSE EXISTING CONCRETE	108 SY
8	REMOVE AND DISPOSE EXISTING TREE	3 EA
9	REMOVE AND DISPOSE EXISTING GRAVEL, CLEAN AND CLEAR EXISTING PLANTER AREA	216 SF
10	REMOVE AND RELOCATE EXISTING LIGHT PEDESTAL	

CONSTRUCTION NOTES

1. PROTECT IN PLACE
2. SAWCUT AND MATCH EXISTING
3. RELOCATE EXISTING ELECTRICAL EQUIPMENT (PER UTILITY RELOCATION ALLOWANCE)

EXISTING CONCRETE PAVEMENT TO BE REMOVED

Two working days before you dig CALL NEW MEXICO ONE CALL SYSTEM 260-1990

TY LIN INTERNATIONAL
engineers | planners | scientists
500 4th Street NW Suite 403F
Albuquerque, NM 87102

AS BUILT INFORMATION: CONTRACTOR / WORK STAKED BY / SURVEY WORK / ACCEPTANCE BY / FIELD VERIFICATION BY / DRAWINGS CORRECTED BY — DATE

MICRO-FILM INFORMATION: RECORDED BY / NO. — DATE

BENCH MARKS

SURVEY INFORMATION: FIELD NOTES — NO. / BY / DATE

ENGINEER'S SEAL: ERIC J. FROBERG, NEW MEXICO, 18855, PROFESSIONAL ENGINEER — 12/07/2018

NO.	DATE	REMARKS	BY
		REVISIONS	
		DESIGN	

DESIGNED BY: T.JENSEN DATE: 12/2018
DRAWN BY: T.JENSEN DATE: 12/2018
CHECKED BY: E.FROBERG DATE: 12/2018

CITY OF ALBUQUERQUE
MUNICIPAL DEVELOPMENT DEPARTMENT
ENGINEERING DIVISION

TITLE: **ISOTOPES PARK BRIDGE AND ACCESS ROAD IMPROVEMENTS DEMOLITION PLAN - RAMPS**

Design Review Committee	City Engineer Approval	Last Design Update	Mo./Day/Yr.	Mo./Day/Yr.

City Project No.	Zone Map No.	Sheet	Of
7703.74	L15	8	15

POINT TABLE					
POINT NO.	STATION/OFFSET	ELEVATION	NORTHING	EASTING	DESCRIPTION
21	10+48.92, 8.0' RT	5115.54	1481654.004	1527245.250	TOC – BEGIN
22	10+67.76, 10.0' RT	5113.53	1481652.223	1527262.201	TOC – END TAPER
23	10+69.63, 10.0' RT	5113.29	1481652.032	1527263.831	TOC – PT
24	10+90.55, 10.0' RT	5110.24	1481649.359	1527284.578	TOC – PC
25	11+24.37, 10.5' RT	5107.52	1481640.824	1527314.328	END HEADER CURB

POINT TABLE					
POINT NO.	STATION/OFFSET	ELEVATION	NORTHING	EASTING	DESCRIPTION
26	11+39.75, 10.0' RT	5106.02	1481635.005	1527327.192	TOC – BEGIN TAPER
27	11+70.34, 6.8' RT	5105.53	1481620.419	1527352.567	TOC – END

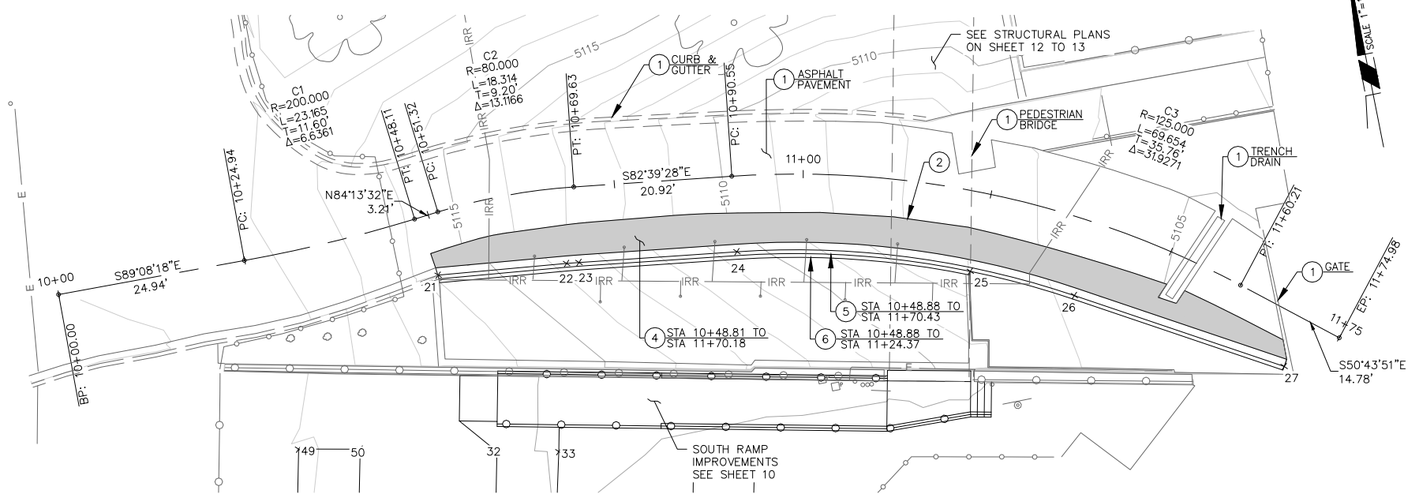

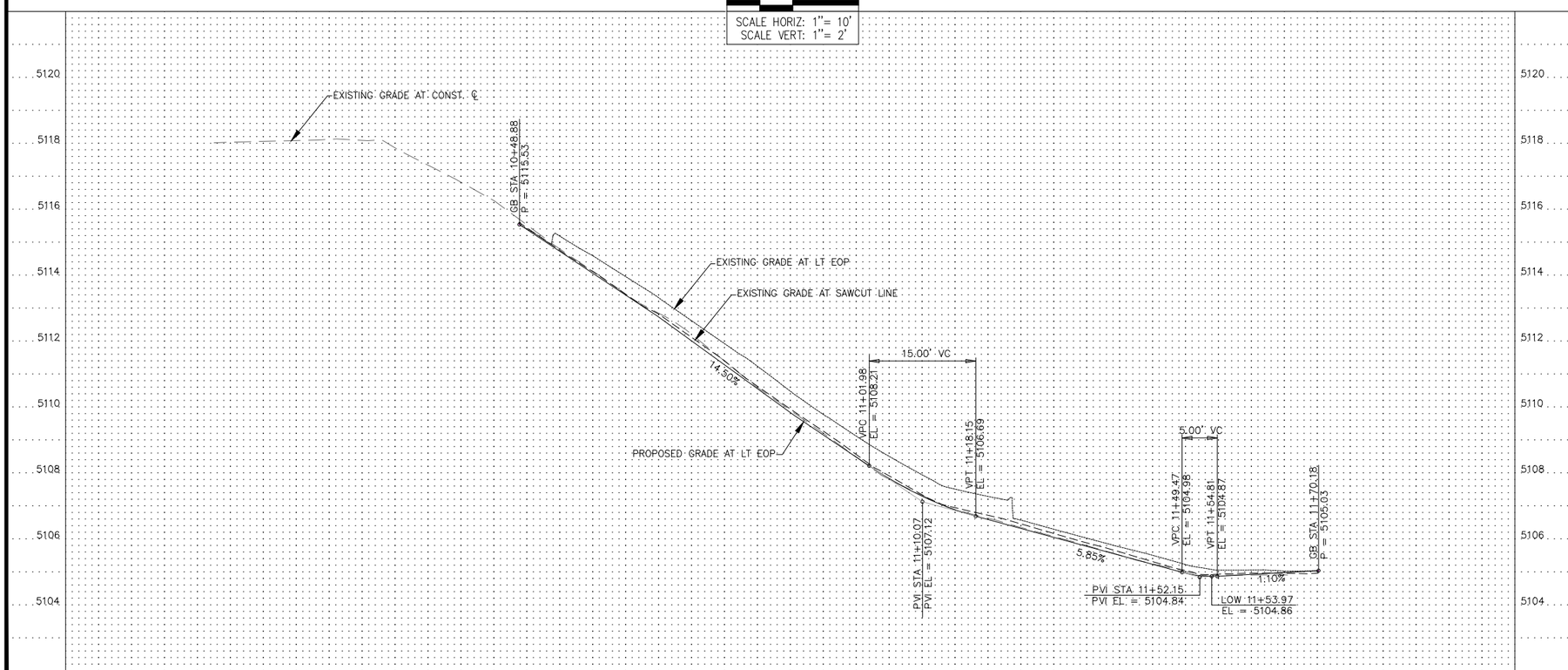

CONSTRUCTION NOTES

1. PROTECT IN PLACE
2. SAWCUT AND MATCH EXISTING
4. CONSTRUCT NEW PAVEMENT PER TYPICAL SECTION ON SHEET 6 — 50 SY
5. CONSTRUCT NEW MEDIAN CURB AND GUTTER PER COA STD DWG 2415B INCLUDING SUBGRADE PREP — 115 LF
6. CONSTRUCT NEW HEADER CURB PER COA STD DWG 2415B INCLUDING SUBGRADE PREP — 71 LF

NOTE:

1. SEE SHEET 7 FOR SAWCUT LINE TABLE.

PROPOSED ASPHALT PAVEMENT

Two working days before you dig CALL NEW MEXICO ONE CALL SYSTEM 260-1990

TY LIN INTERNATIONAL
engineers | planners | scientists
500 4th Street NW Suite 403F
Albuquerque, NM 87102

CITY OF ALBUQUERQUE
MUNICIPAL DEVELOPMENT DEPARTMENT
ENGINEERING DIVISION

TITLE: **ISOTOPES PARK BRIDGE AND ACCESS ROAD IMPROVEMENTS**
PLAN AND PROFILE - ACCESS ROAD

Design Review Committee	City Engineer Approval	Last Design Update	Mo./Day/Yr.	Mo./Day/Yr.

City Project No.	Zone Map No.	Sheet	Of
7703.74	L15	9	15

AS BUILT INFORMATION
CONTRACTOR / WORK STAKED BY / INSPECTOR'S ACCEPTANCE BY / FIELD VERIFICATION BY / DRAWINGS CORRECTED BY — DATE
MICRO-FILM INFORMATION
RECORDED BY — DATE
NO.

BENCH MARKS

SURVEY INFORMATION
FIELD NOTES
NO. | BY | DATE

ENGINEER'S SEAL
ERIC J. FROBERG
NEW MEXICO
18855
PROFESSIONAL ENGINEER
12/07/2018

NO.	DATE	REMARKS	BY

REVISIONS
DESIGN
DESIGNED BY: T.JENSEN DATE: 12/2018
DRAWN BY: T.JENSEN DATE: 12/2018
CHECKED BY: E.FROBERG DATE: 12/2018

POINT TABLE					
POINT NO.	STATION/OFFSET	ELEVATION	NORTHING	EASTING	DESCRIPTION
30	1+21.52, 3.0' LT	5119.64±	1481640.443	1527245.493	MATCH EXISTING
31	1+21.52, 3.0' RT	5119.65±	1481634.574	1527244.247	MATCH EXISTING
32	1+26.54, 7.0' RT	5119.81±	1481629.641	1527248.337	MATCH EXISTING
33	1+34.72, 6.9' RT	5120.04±	1481628.030	1527256.355	MATCH EXISTING
39	1+26.52, 3.0' LT	5119.72	1481639.405	1527250.384	FG
40	1+26.52, 3.0' RT	5119.74	1481633.536	1527249.138	FG
41	1+78.01, 3.0' RT	5122.04	1481622.883	1527299.528	FG
42	1+89.03, 1.0' RT	5122.07	1481622.600	1527310.726	FG

POINT TABLE					
POINT NO.	STATION/OFFSET	ELEVATION	NORTHING	EASTING	DESCRIPTION
43	1+89.03, 3.0' LT	5122.13	1481626.516	1527311.540	FG
44	1+89.04, 4.4' LT	5122.13	1481627.907	1527311.837	FG
45	1+78.00, 4.4' LT	5122.13	1481630.123	1527301.038	FG
46	1+78.00, 3.0' LT	5122.13	1481628.758	1527300.748	FG
47	1+26.48, 15.8' RT	5119.83	1481621.010	1527246.452	MATCH EXISTING
48	1+34.49, 15.8' RT	5120.01	1481619.331	1527254.289	MATCH EXISTING
49	1+00.33, 7.0' RT	5118.91±	1481635.052	1527222.694	MATCH EXISTING
50	1+08.46, 6.9' RT	5119.18±	1481633.466	1527230.670	MATCH EXISTING

POINT TABLE					
POINT NO.	STATION/OFFSET	ELEVATION	NORTHING	EASTING	DESCRIPTION
51	1+00.27, 15.9' RT	5118.94±	1481626.366	1527220.796	MATCH EXISTING
52	1+08.40, 15.8' RT	5119.20±	1481624.780	1527228.772	MATCH EXISTING
53	1+52.53, 7.0' RT	5119.94±	1481624.235	1527273.764	MATCH EXISTING
54	1+60.61, 6.9' RT	5119.85±	1481622.638	1527281.685	MATCH EXISTING
55	1+52.54, 15.8' RT	5119.84±	1481615.604	1527271.944	MATCH EXISTING
56	1+60.50, 15.9' RT	5119.76±	1481613.878	1527279.716	MATCH EXISTING

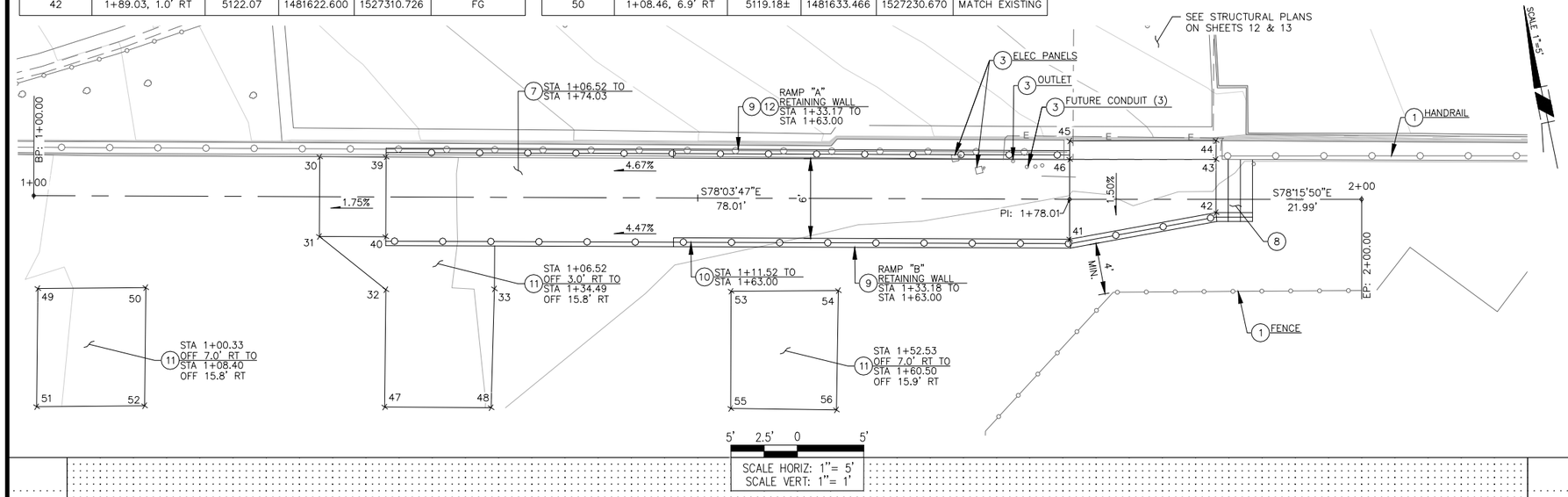

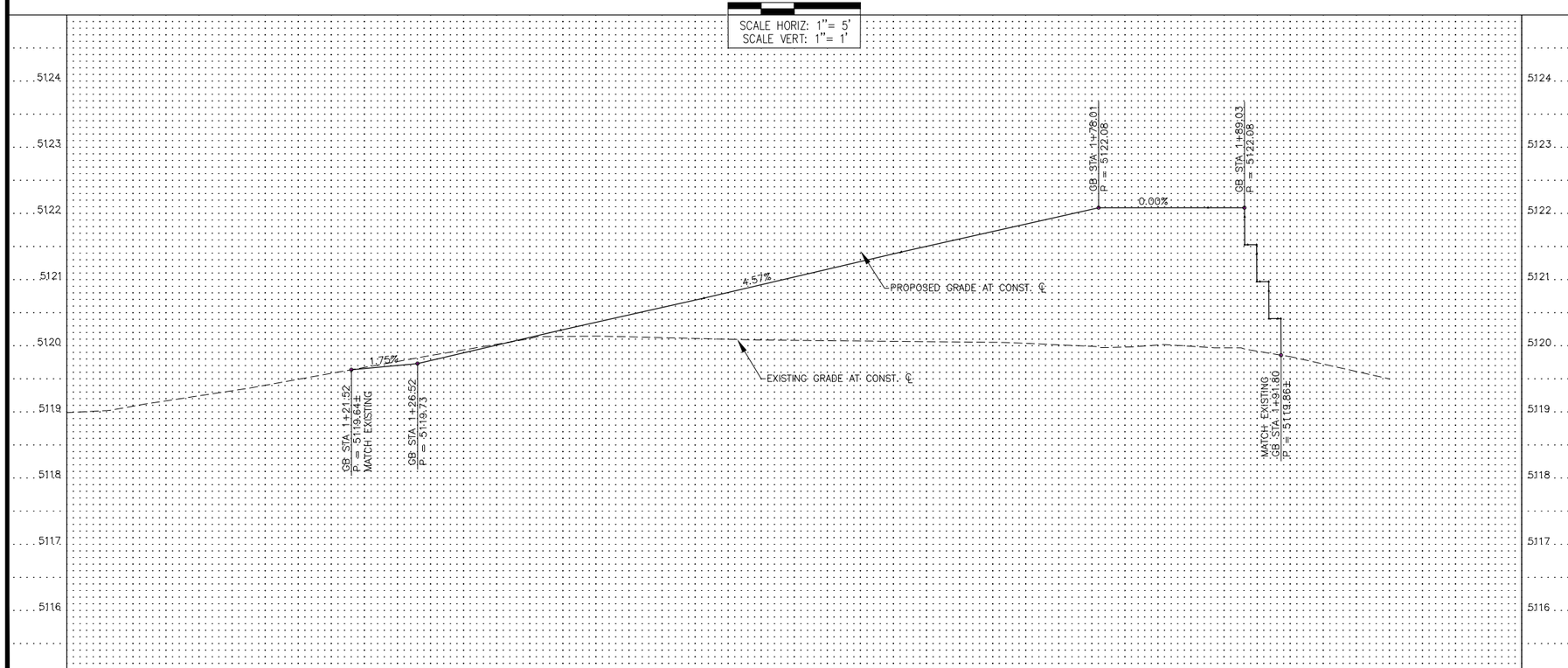

CONSTRUCTION NOTES

1. PROTECT IN PLACE
3. RELOCATE EXISTING ELECTRICAL EQUIPMENT (PER UTILITY RELOCATION ALLOWANCE)
7. CONSTRUCT NEW CONCRETE RAMP PER DETAILS ON SHEETS 6 & 15 — 49 SY
8. CONSTRUCT NEW CONCRETE STAIRS PER DETAIL ON SHEET 6 — 20 LF
9. CONSTRUCT RETAINING WALL PER DETAILS ON SHEET 14
10. INSTALL NEW PEDESTRIAN HANDRAIL ON TOP OF RETAINING WALL & RAMP — 66 LF
11. CONSTRUCT NEW CONCRETE DECK — 28 SY
12. REINSTALL EXISTING HANDRAIL ON TOP OF RETAINING WALL PER DETAILS ON SHEET 15

NOTE:

1. SEE SHEET 8 FOR SAWCUT LINE TABLE.

AS BUILT INFORMATION

	DATE
CONTRACTOR	
WORK STAKED BY	
SURVEYED BY	
ACCEPTANCE BY	
FIELD VERIFICATION BY	
DRAWINGS CORRECTED BY	

MICRO-FILM INFORMATION

	DATE
RECORDED BY	

NO.	BY

BENCH MARKS

SURVEY INFORMATION

FIELD NOTES

NO.	BY	DATE

ENGINEER'S SEAL

ERIC J. FROBERG NEW MEXICO 18855 PROFESSIONAL ENGINEER

12/07/2018

NO.	DATE	REMARKS	BY

REVISIONS

DESIGN

DESIGNED BY: T.JENSEN DATE: 12/2018
DRAWN BY: T.JENSEN DATE: 12/2018
CHECKED BY: E.FROBERG DATE: 12/2018

Two working days before you dig CALL NEW MEXICO ONE CALL SYSTEM 260-1990

TY LIN INTERNATIONAL
engineers | planners | scientists
500 4th Street NW Suite 403F
Albuquerque, NM 87102

CITY OF ALBUQUERQUE
MUNICIPAL DEVELOPMENT DEPARTMENT
ENGINEERING DIVISION

TITLE: **ISOTOPES PARK BRIDGE AND ACCESS ROAD IMPROVEMENTS**
PLAN AND PROFILE - SOUTH RAMP

Design Review Committee	City Engineer Approval	Last Design Update	Mo./Day/Yr.	Mo./Day/Yr.

City Project No.	Zone Map No.	Sheet	Of
7703.74	L15	10	15

POINT TABLE					
POINT NO.	STATION/OFFSET	ELEVATION	NORTHING	EASTING	DESCRIPTION
64	3+09.92, 5.2' RT	5122.23±	1481724.093	1527327.507	MATCH EXISTING
65	3+10.07, 5.2' LT	5122.23±	1481724.232	1527317.116	MATCH EXISTING
70	3+05.07, 5.3' LT	5122.28	1481719.237	1527317.014	FG
71	2+91.42, 5.0' LT	5123.10	1481705.587	1527317.401	FG
72	2+86.95, 5.3' LT	5123.15	1481702.274	1527316.667	FG
73	2+71.66, 5.5' LT	5124.30	1481687.347	1527313.361	FG

POINT TABLE					
POINT NO.	STATION/OFFSET	ELEVATION	NORTHING	EASTING	DESCRIPTION
74	2+71.68, 5.2' RT	5124.30	1481685.144	1527323.834	FG
75	2+79.62, 6.2' RT	5123.71	1481692.698	1527326.489	FG
76	2+86.86, 4.8' RT	5123.16	1481700.077	1527326.587	FG
77	2+91.29, 4.3' RT	5123.08	1481705.464	1527326.659	FG
78	3+04.92, 5.2' RT	5122.29	1481719.093	1527327.507	FG

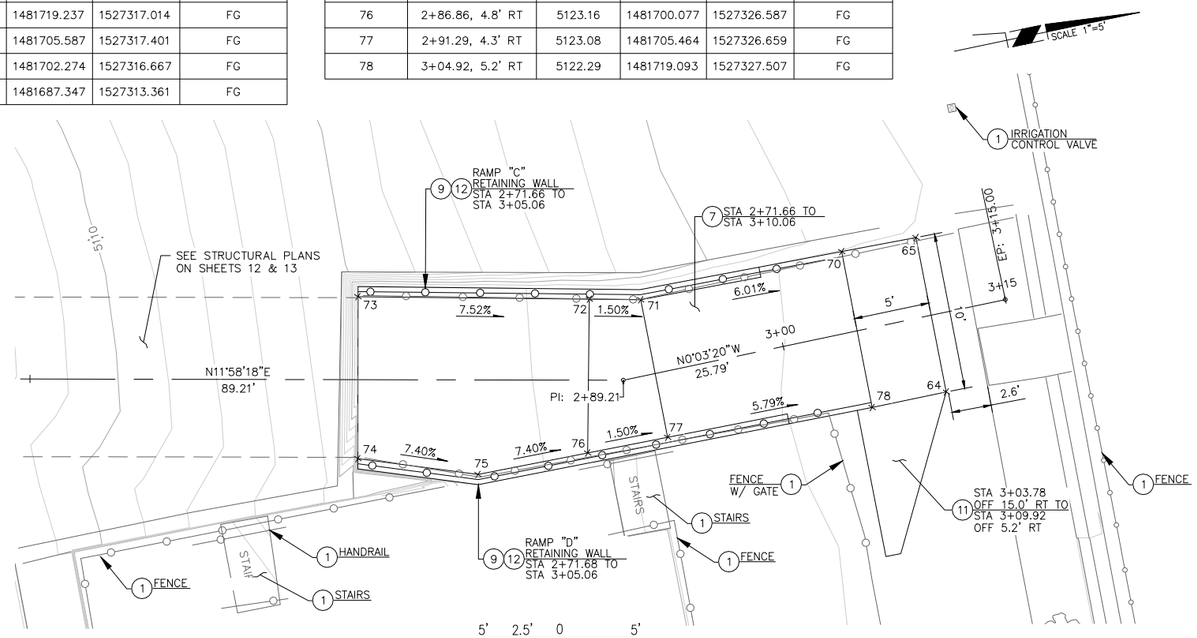

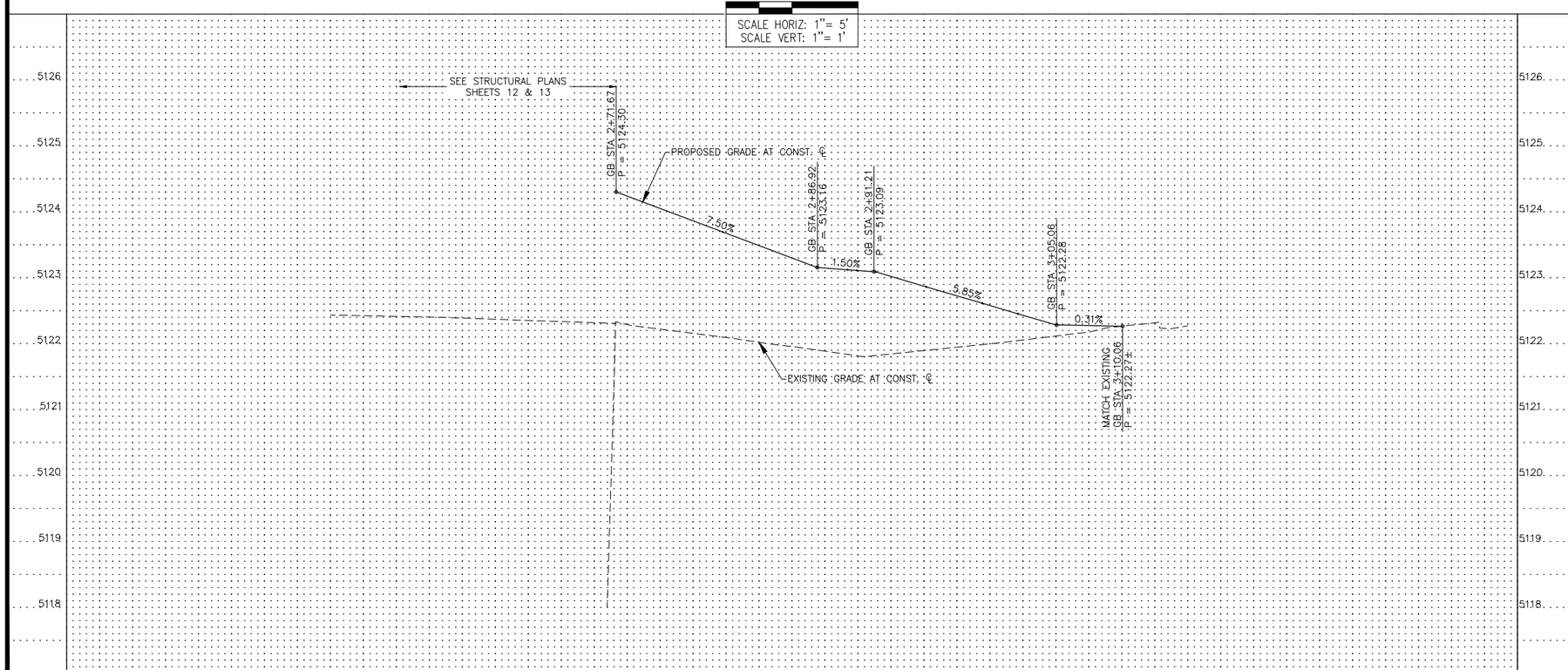

CONSTRUCTION NOTES

1. PROTECT IN PLACE
7. CONSTRUCT NEW CONCRETE RAMP PER DETAILS ON SHEETS 6 & 15 — 44 SY
9. CONSTRUCT RETAINING WALL PER DETAILS ON SHEET 14
11. CONSTRUCT NEW CONCRETE DECK — 4 SY
12. REINSTALL EXISTING HANDRAIL ON TOP OF RETAINING WALL & RAMP

NOTE:

1. SEE SHEET 8 FOR SAWCUT LINE TABLE.

Two working days before you dig CALL NEW MEXICO ONE CALL SYSTEM 260-1990

TY LIN INTERNATIONAL
engineers | planners | scientists
500 4th Street NW Suite 403F
Albuquerque, NM 87102

CITY OF ALBUQUERQUE
MUNICIPAL DEVELOPMENT DEPARTMENT
ENGINEERING DIVISION

TITLE: **ISOTOPES PARK BRIDGE AND ACCESS ROAD IMPROVEMENTS**
PLAN AND PROFILE - NORTH RAMP

Design Review Committee | City Engineer Approval | Last Design Update | Mo./Day/Yr. | Mo./Day/Yr.

City Project No. 7703.74 | Zone Map No. L15 | Sheet 11 Of 15

AS BUILT INFORMATION: CONTRACTOR / WORK STAKED BY / SURVEYED BY / ACCEPTANCE BY / FIELD VERIFICATION BY / DRAWINGS CORRECTED BY — DATE
MICRO-FILM INFORMATION: RECORDED BY / DATE / NO.

BENCH MARKS

SURVEY INFORMATION — FIELD NOTES: NO. / BY / DATE

ENGINEER'S SEAL: ERIC J. FROBERG, NEW MEXICO, 18855, PROFESSIONAL ENGINEER — 12/07/2018

NO.	DATE	REMARKS	BY

REVISIONS

DESIGN
DESIGNED BY: T.JENSEN DATE: 12/2018
DRAWN BY: T.JENSEN DATE: 12/2018
CHECKED BY: E.FROBERG DATE: 12/2018

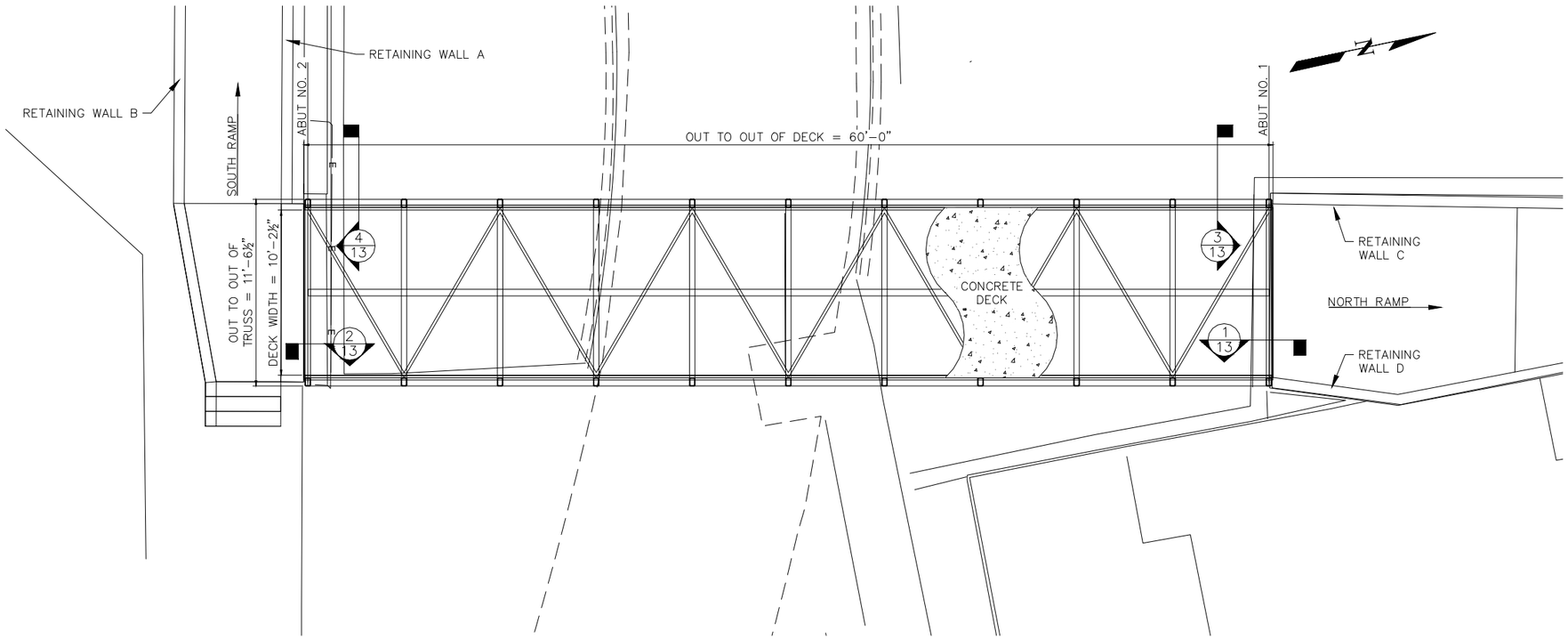

STRUCTURE LOCATION PLAN

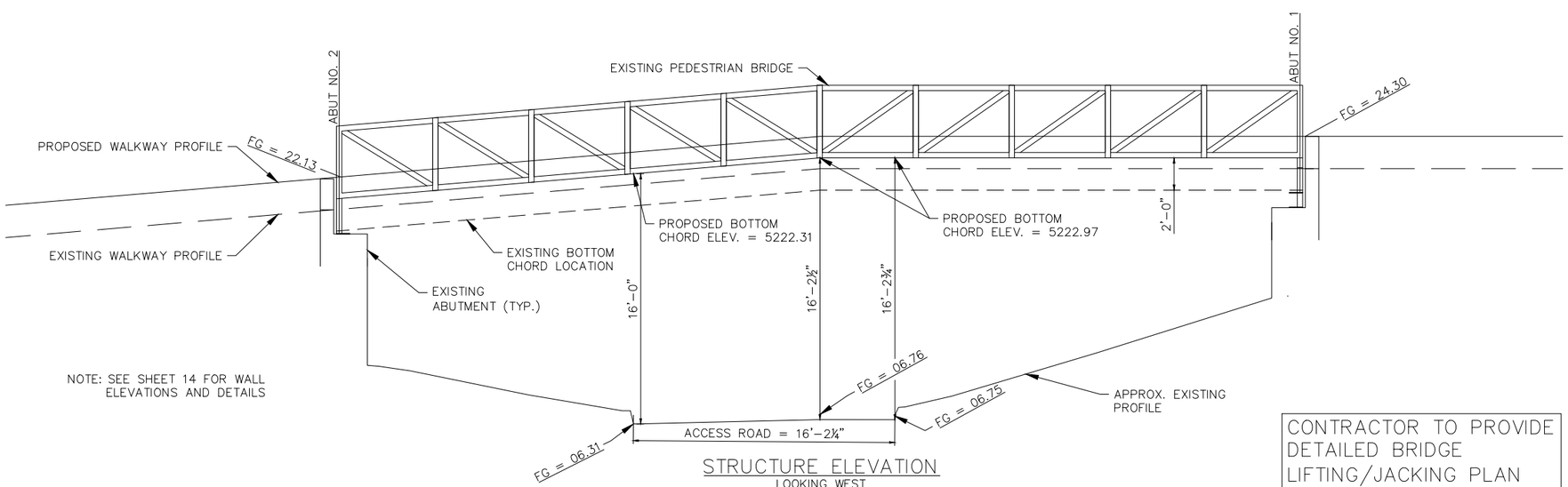

NOTE: SEE SHEET 14 FOR WALL ELEVATIONS AND DETAILS

STRUCTURE ELEVATION
LOOKING WEST

CONTRACTOR TO PROVIDE DETAILED BRIDGE LIFTING/JACKING PLAN TO CITY FOR REVIEW PRIOR TO CONSTRUCTION

AS BUILT INFORMATION

	DATE
CONTRACTOR	
WORK STAKED BY	
INSPECTOR'S ACCEPTANCE BY	
FIELD VERIFICATION BY	
DRAWINGS CORRECTED BY	

MICRO-FILM INFORMATION

	DATE
RECORDED BY	
NO.	

BENCH MARKS

SURVEY INFORMATION

FIELD NOTES

NO.	BY	DATE

ENGINEER'S SEAL

ERIC J. FROBERG
NEW MEXICO
18855
PROFESSIONAL ENGINEER

12/07/2018

NO.	DATE	REMARKS	BY

REVISIONS

DESIGN

DESIGNED BY: T.JENSEN DATE: 12/2018
DRAWN BY: T.JENSEN DATE: 12/2018
CHECKED BY: E.FROBERG DATE: 12/2018

Two working days before you dig.
CALL NEW MEXICO ONE CALL SYSTEM
260-1990

TY LIN INTERNATIONAL
engineers | planners | scientists
500 4th Street NW Suite 403F
Albuquerque, NM 87102

CITY OF ALBUQUERQUE
MUNICIPAL DEVELOPMENT DEPARTMENT
ENGINEERING DIVISION

TITLE: **ISOTOPES PARK BRIDGE AND ACCESS ROAD IMPROVEMENTS BRIDGE PLAN AND PROFILE**

Design Review Committee	City Engineer Approval	Last Design Update	Mo./Day/Yr.	Mo./Day/Yr.

City Project No.	Zone Map No.	Sheet	Of
7703.74	L15	12	15

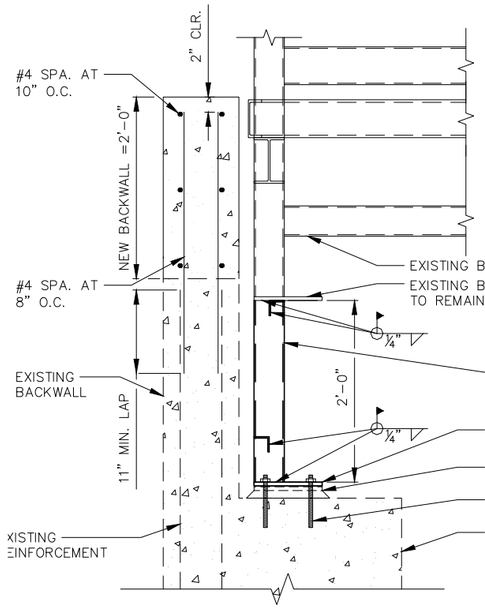

1 ABUTMENT NO. 1
1" = 1'-0"

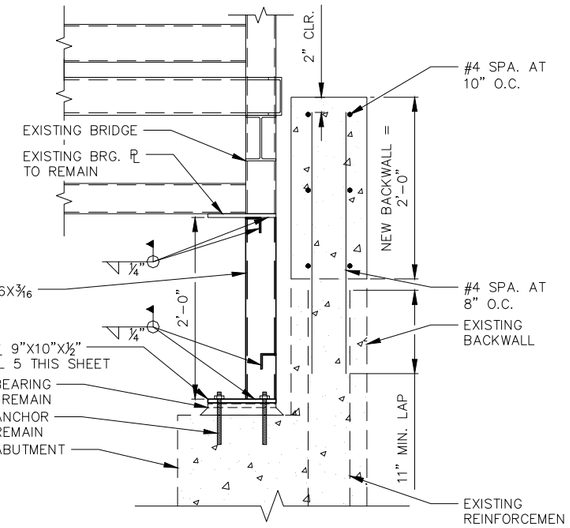

2 ABUTMENT NO. 2
1" = 1'-0"

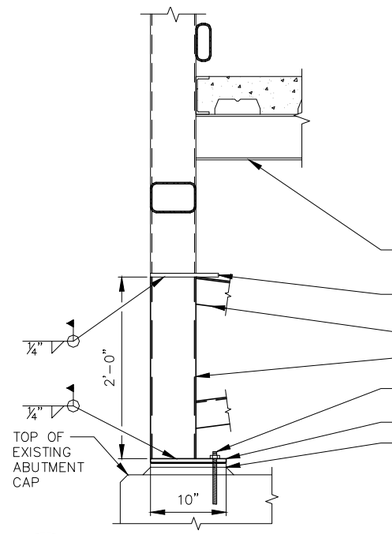

3 ABUTMENT NO. 1
1" = 1'-0"

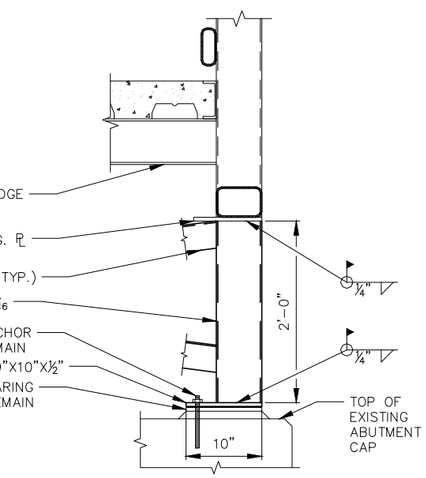

4 ABUTMENT NO. 2
1" = 1'-0"

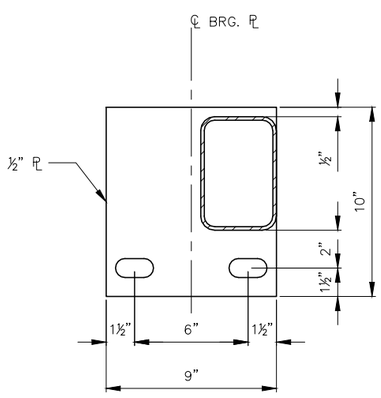

5 BEARING PLATE
1/4" = 1'-0"

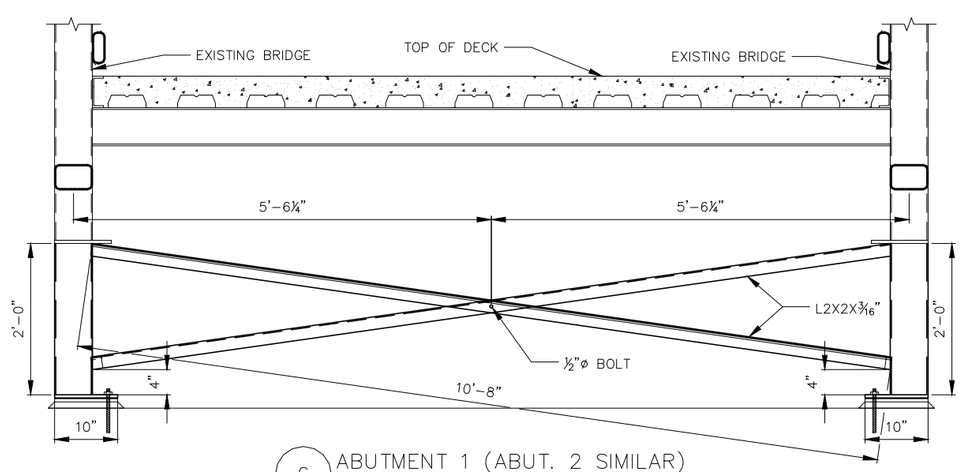

6 ABUTMENT 1 (ABUT. 2 SIMILAR)
1" = 10'-0"

CONTRACTOR TO PROVIDE DETAILED BRIDGE LIFTING/JACKING PLAN TO CITY FOR REVIEW PRIOR TO CONSTRUCTION

AS BUILT INFORMATION

	DATE
CONTRACTOR	
WORK STAKED BY	
INSPECTOR'S ACCEPTANCE BY	
FIELD VERIFICATION BY	
DRAWINGS CORRECTED BY	

MICRO-FILM INFORMATION

	DATE
RECORDED BY	
NO.	

BENCH MARKS

SURVEY INFORMATION

NO.	FIELD NOTES BY	DATE

ENGINEER'S SEAL

ERIC J. FROBERG
NEW MEXICO
18855
PROFESSIONAL ENGINEER
12/07/2018

NO.	DATE	REMARKS	BY
		REVISIONS	

DESIGN

DESIGNED BY:	T.JENSEN	DATE: 12/2018
DRAWN BY:	T.JENSEN	DATE: 12/2018
CHECKED BY:	E.FROBERG	DATE: 12/2018

Two working days before you dig
CALL NEW MEXICO ONE CALL SYSTEM
260-1990

TY LIN INTERNATIONAL
engineers | planners | scientists
500 4th Street NW Suite 403F
Albuquerque, NM 87102

CITY OF ALBUQUERQUE
MUNICIPAL DEVELOPMENT DEPARTMENT
ENGINEERING DIVISION

TITLE: **ISOTOPES PARK BRIDGE AND ACCESS ROAD IMPROVEMENTS BRIDGE DETAILS**

Design Review Committee	City Engineer Approval	Last Design Update	Mo./Day/Yr.	Mo./Day/Yr.

City Project No.	Zone Map No.	Sheet	Of
7703.74	L15	13	15

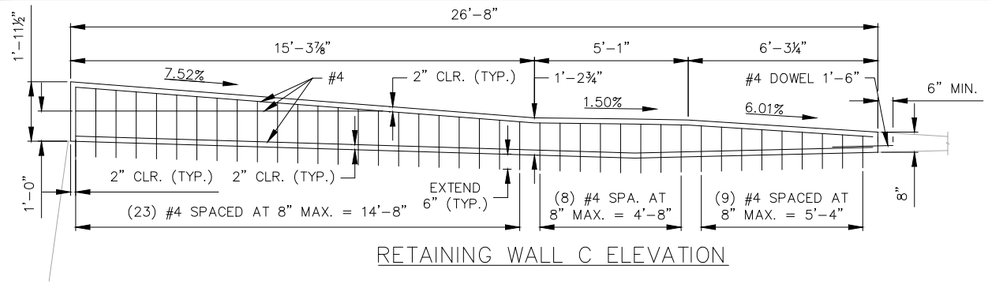

RETAINING WALL C ELEVATION

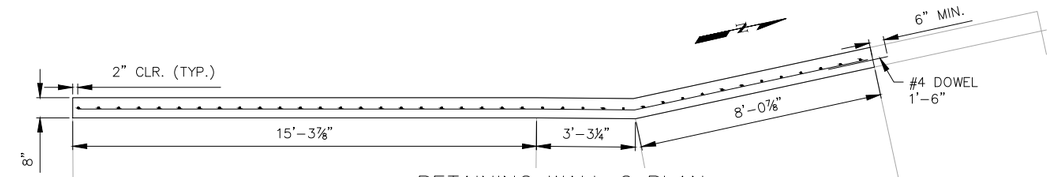

RETAINING WALL C PLAN

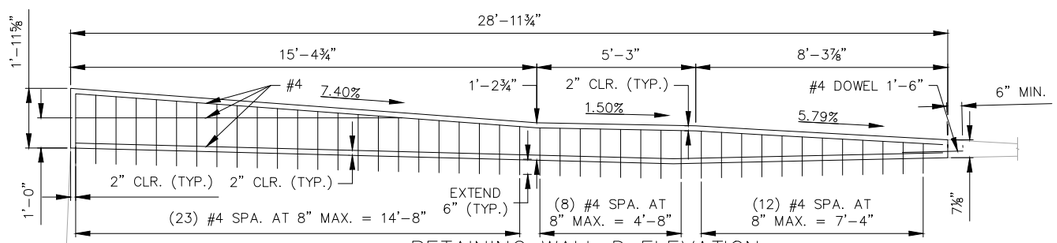

RETAINING WALL D ELEVATION

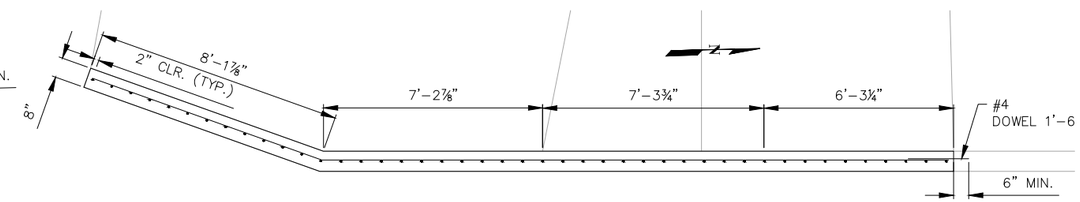

RETAINING WALL D PLAN

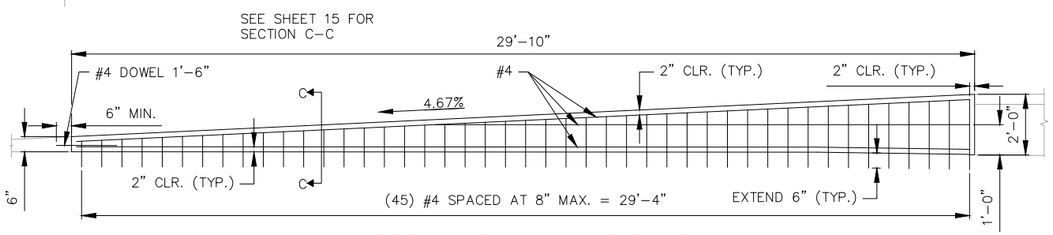

RETAINING WALL A ELEVATION

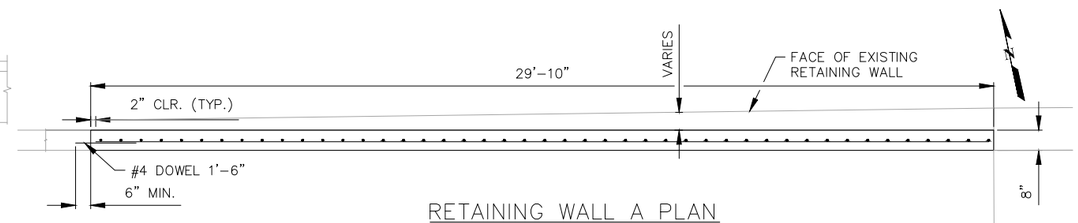

RETAINING WALL A PLAN

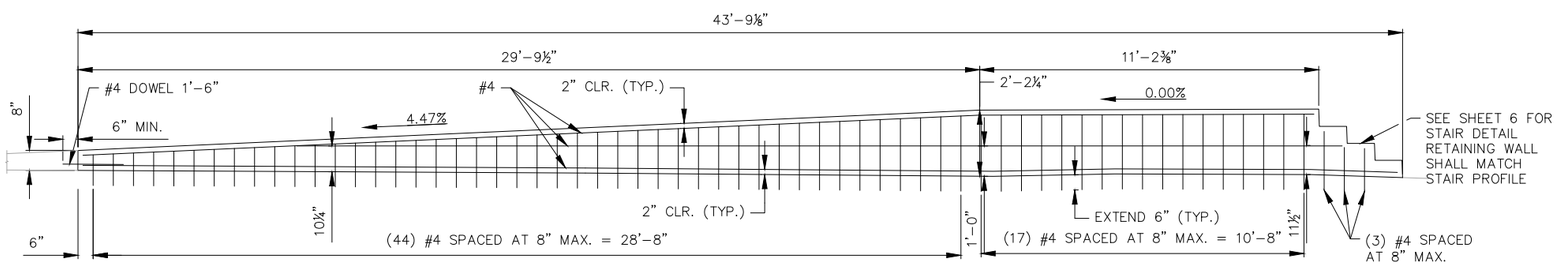

RETAINING WALL B ELEVATION

NOTE: RAILING NOT SHOWN FOR CLARITY. REATTACH RAILING TO TOP OF PROPOSED RETAINING WALL. RAILING SHALL BE CENTERED ON PROPOSED RETAINING WALL.

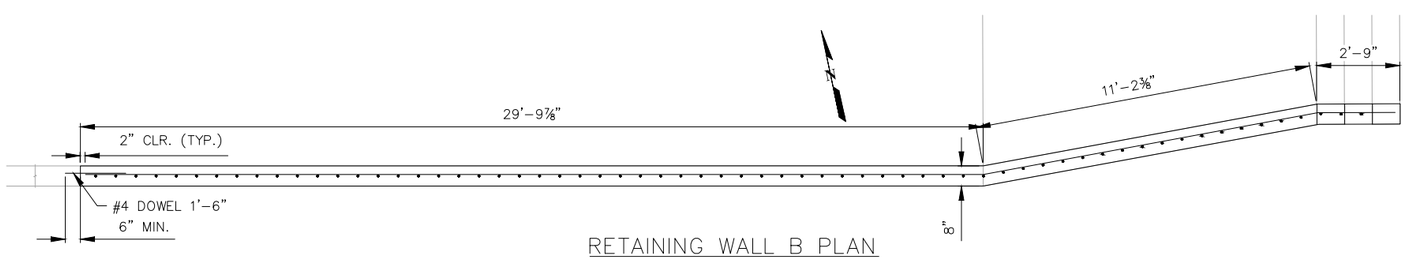

RETAINING WALL B PLAN

Two working days before you dig
CALL NEW MEXICO ONE CALL SYSTEM
260-1990

TY LIN INTERNATIONAL
engineers | planners | scientists
500 4th Street NW Suite 403F
Albuquerque, NM 87102

CITY OF ALBUQUERQUE
MUNICIPAL DEVELOPMENT DEPARTMENT
ENGINEERING DIVISION

TITLE: **ISOTOPES PARK BRIDGE AND ACCESS ROAD IMPROVEMENTS RETAINING WALL PLANS AND PROFILES**

Design Review Committee	City Engineer Approval	Last Design Update	Mo./Day/Yr.	Mo./Day/Yr.

City Project No.	Zone Map No.	Sheet	Of
7703.74	L15	14	15

AS BUILT INFORMATION
CONTRACTOR DATE
WORK STAKED BY DATE
INSPECTOR'S ACCEPTANCE BY DATE
FIELD VERIFICATION BY DATE
DRAWINGS CORRECTED BY DATE
MICRO-FILM INFORMATION
RECORDED BY DATE
NO.

BENCH MARKS

SURVEY INFORMATION
FIELD NOTES
NO. BY DATE

ENGINEER'S SEAL
ERIC J. FROBERG
NEW MEXICO
18855
PROFESSIONAL ENGINEER
12/07/2018

REVISIONS
NO. DATE REMARKS BY
DESIGN
DESIGNED BY: T.JENSEN DATE: 12/2018
DRAWN BY: T.JENSEN DATE: 12/2018
CHECKED BY: E.FROBERG DATE: 12/2018

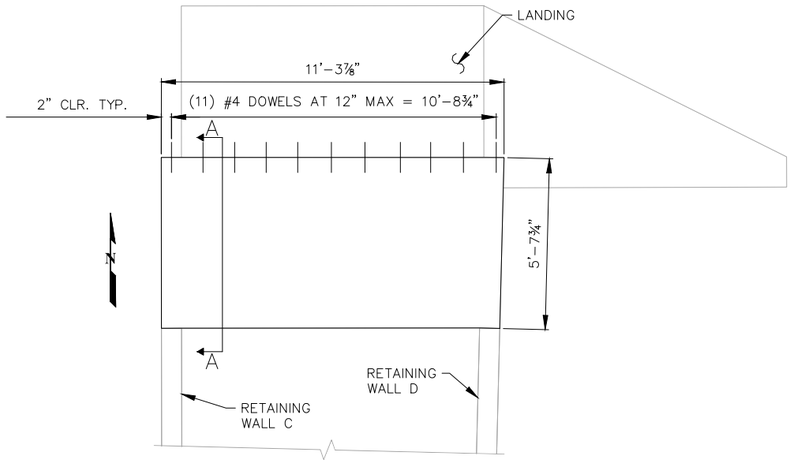

END OF NORTH RAMP PLAN

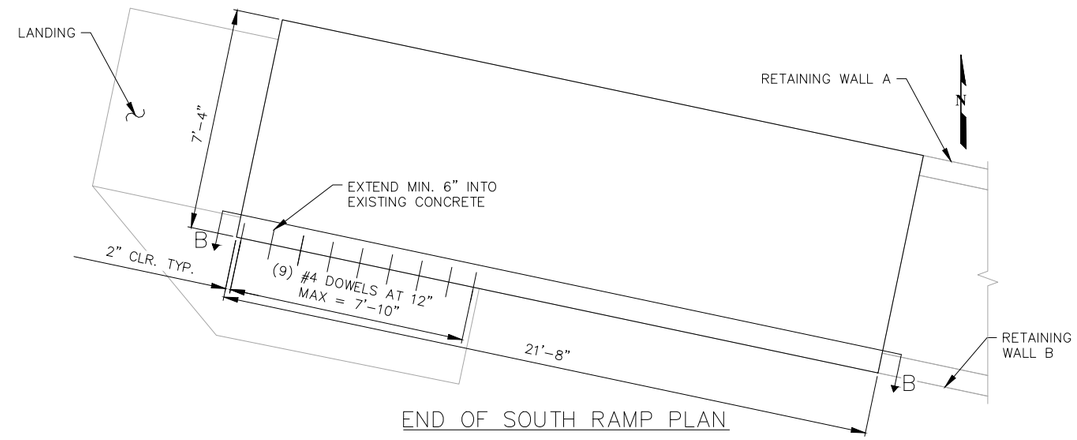

END OF SOUTH RAMP PLAN

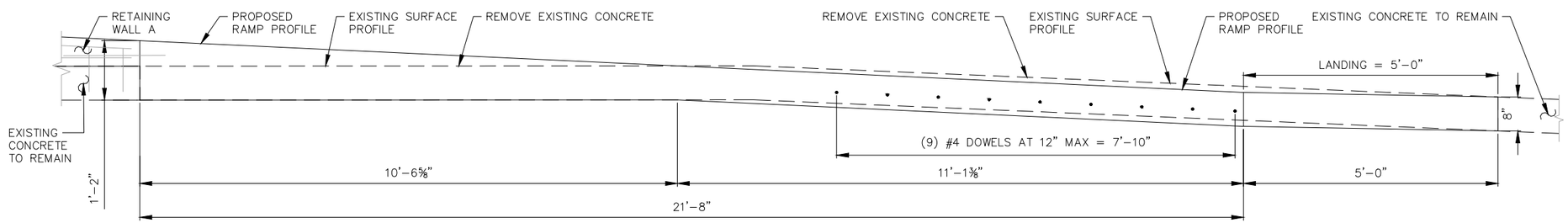

SECTION B–B

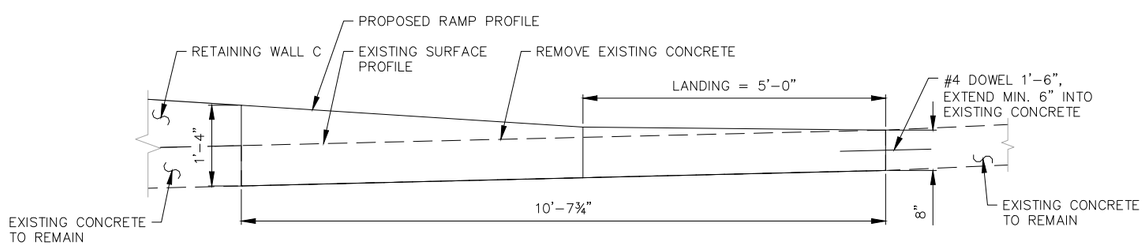

SECTION A–A

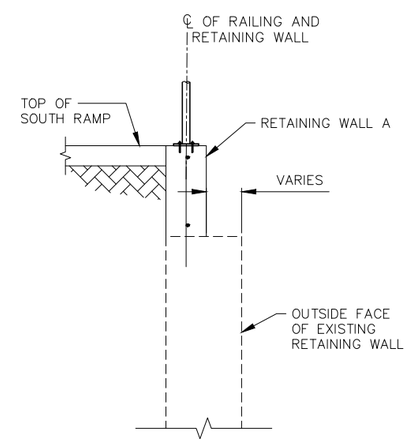

SECTION C–C

AS BUILT INFORMATION

CONTRACTOR	DATE
WORK STAKED BY	DATE
INSPECTOR'S ACCEPTANCE BY	DATE
FIELD VERIFICATION BY	DATE
DRAWINGS CORRECTED BY	DATE

MICRO–FILM INFORMATION

RECORDED BY	DATE
NO.	

BENCH MARKS

SURVEY INFORMATION

FIELD NOTES

NO.	BY	DATE

ENGINEER'S SEAL

ERIC J. FROBERG NEW MEXICO 18855 PROFESSIONAL ENGINEER

12/07/2018

REVISIONS

NO.	DATE	REMARKS	BY

DESIGN

DESIGNED BY: T.JENSEN DATE: 12/2018
DRAWN BY: T.JENSEN DATE: 12/2018
CHECKED BY: E.FROBERG DATE: 12/2018

Two working days before you dig CALL NEW MEXICO ONE CALL SYSTEM 260-1990

TY LIN INTERNATIONAL
engineers | planners | scientists
500 4th Street NW Suite 403F
Albuquerque, NM 87102

CITY OF ALBUQUERQUE
MUNICIPAL DEVELOPMENT DEPARTMENT
ENGINEERING DIVISION

TITLE: **ISOTOPES PARK BRIDGE AND ACCESS ROAD IMPROVEMENTS RAMP DETAILS**

Design Review Committee	City Engineer Approval	Last Design Update	Mo./Day/Yr.	Mo./Day/Yr.

City Project No.	Zone Map No.	Sheet	Of
7703.74	L15	15	15