SUNSHINE WEST UTILITY IMPROVEMENT

ABBREVIATIONS

A = AIR LINE
AREA = DRAIN
AIP = ABANDONED IN PLACE
BLDG = BUILDING
BM = BENCHMARK
CATV = CABLE TELEVISION LINE
CIP = CAST IRON PIPE
CMP = CORRUGATED PIPE
CMPA = CORRUGATED METAL PIPE ARCH
CO = CLEANOUT
COA = CITY OF ALBUQUERQUE
CONC = CONCRETE
CL = CENTERLINE
DIA = DIAMETER
DIP = DUCTILE IRON PIPE
DTL = DETAIL
DWG = DRAWING
EG = EXISTING GRADE
ELEC = ELECTRIC
ELEV = ELEVATION
EX = EXISTING
FF = FINISH FLOOR ELEVATION
FG = FINISH GRADE
FH = FIRE HYDRANT
FL = FLOW LINE
G = GAS PIPE
GM = GAS METER
GV = GATE VALVE
HI PT = HIGH POINT
INV = INVERT ELEVATION
LF = LINEAL FEET
LP = LIGHT POLE
L/S = LANDSCAPING
MH = MANHOLE
NG = NATURAL GRADE
OE = OVERHEAD ELECTRIC LINE
OT = OVERHEAD TELEPHONE LINE
PB = ELECTRIC PULL BOX
PCC = PORTLAND CEMENT CONCRETE
PP = POWER POLE
PROP = PROPOSED
PVC = POLYVINYL CHLORIDE PIPE
RCP = REINFORCED CONCRETE PIPE
R/W = RIGHT-OF-WAY
S = SLOPE
SAS = SANITARY SEWER
SD = STORM DRAIN
STA = STATION
STD = STANDARD
SW = SIDEWALK
T = TELEPHONE
TA = TOP OF ASPHALT PAVEMENT
TAC = TOP OF ASPHALT CURB
TC = TOP OF CONCRETE SLAB (PAVEMENT)
TCC = TOP OF CONCRETE CURB
TS = TOP OF SIDEWALK
TW = TOP OF WALL
TYP = TYPICAL
UE = UNDERGROUND ELECTRIC
UT = UNDERGROUND TELEPHONE
W = WATER
WM = WATER METER
WV = WATER VALVE

INDEX OF DRAWINGS

SHEET NO.	DESCRIPTION
1	COVER, INDEX OF SHEETS, GENERAL NOTES AND VICINITY MAP
2A-2E	~~OVERALL SEWER LAYOUT PLAN~~ Plat spw 3/5/08
3	OVERALL SEWER LAYOUT PLAN
4-7	SEWER LINE PLAN AND PROFILE
8	OVERALL WATER LAYOUT PLAN
9-12	WATER LINE PLAN AND PROFILE
13-14	TYPICAL WATER DETAILS
15-16	TYPICAL SEWER DETAILS
~~17-20~~	~~STANDARD TRAFFIC CONTROL SHEETS~~ spw 3/5/08

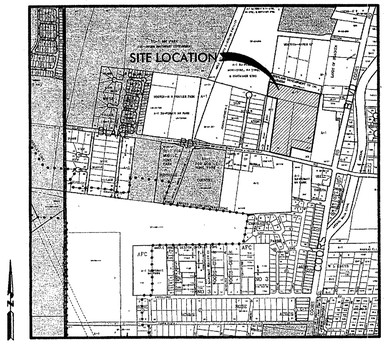

VICINITY MAP NUMBER N-10

GENERAL NOTES:

1. ALL WORK DETAILED ON THESE PLANS TO BE PERFORMED, EXCEPT AS OTHERWISE STATED OR APPROVED HEREON, SHALL BE CONSTRUCTED IN ACCORDANCE WITH NMDOT STANDARD SPECIFICATIONS FOR ROAD AND BRIDGE CONSTRUCTION, LATEST EDITION THROUGH MOST RECENT UPDATE AND WILL BE REFERRED TO HERE ON AS "STANDARD SPECIFICATIONS".
2. ALL CONSTRUCTION WITHIN COUNTY RIGHT-OF-WAY OR EASEMENTS MUST BE DONE FROM APPROVED WORK ORDER DOCUMENTS FROM THE COUNTY.
3. ALL WORK ON THIS PROJECT SHALL BE PERFORMED IN ACCORDANCE WITH APPLICABLE FEDERAL, STATE AND LOCAL LAWS, ORDINANCES, RULES AND REGULATIONS CONCERNING CONSTRUCTION SAFETY AND HEALTH.
4. CONTRACTOR AGREES THAT HE SHALL ASSUME THE SOLE AND COMPLETE RESPONSIBILITY FOR THE JOB SITE CONDITIONS DURING THE COURSE OF CONSTRUCTION OF THIS PROJECT, INCLUDING SAFETY OF ALL PERSONS AND PROPERTY. THIS REQUIREMENT SHALL APPLY CONTINUOUSLY AND NOT BE LIMITED TO NORMAL WORKING HOURS. CONTRACTOR SHALL DEFEND, INDEMNIFY, AND HOLD HARMLESS THE OWNER AND ENGINEER FRON ANY AND ALL LIABILITY REAL OR ALLEGED, IN CONNECTION WITH PERFORMANCE OF WORK ON THIS PROJECT, EXCEPT LIABILITY ARISING FROM THE SOLE NEGLIGENCE OF THE OWNER OR ENGINEER.
5. ALL EXCAVATION, TRENCHING, AND SHORING ACTIVITIES MUST BE ACCOMPLISHED IN ACCORDANCE WITH OSHA 29CFR 1926.650 SUBPART P.
6. AN EXCAVATION/CONSTRUCTION PERMIT WILL BE REQUIRED BEFORE BEGINNING ANY WORK WITHIN COUNTY RIGHT-OF-WAY.
7. CONTRACTOR SHALL SECURE A "TOPSOIL DISTURBANCE PERMIT" PRIOR TO BEGINNING CONSTRUCTION (IF REQUIRED BY THE CITY OF ALBUQUERQUE).
8. PERM'T REQUESTS MAY BE DENIED OR DELAYED DUE TO CONFLICTS WITH OTHER PROJECTS IN THE AREA.
9. THE CONTRACTOR SHALL NOTIFY THE ENGINEER NOT LESS THAN SEVEN (7) DAYS PRIOR TO STARTING WORK IN ORDER THAT THE CITY SURVEYOR MAY MAKE NECESSARY MEASURES TO INSURE THE PRESERVATION OF SURVEY MONUMENTS. CONTRACTOR SHALL NOT DISTURB PERMANENT SURVEY MONUMENTS WITHOUT THE CONSENT OF THE CITY SURVEYOR AND SHALL NOTIFY THE CITY SURVEYOR AND BEAR THE EXPENSE OF REPLACING ANY THAT MAY BE DISTURBED WITHOUT PERMISSION. ONLY THE CITY SURVEYOR SHALL REPLACE SURVEY MONUMENTS. WHEN A CHANGE IS MADE IN THE FINISHED ELEVATIONS OF THE PAVEMENT OF ANY ROADWAY IN WHICH A PERMANENT SURVEY MONUMENT IS LOCATED, CONTRACTOR SHALL, AT HIS OWN EXPENSE ADJUST THE MONUMENT COVER TO THE NEW GRADE UNLESS OTHERWISE SPECIFIED. REFER TO STANDARD SPECIFICATIONS SECTION 4.4.
10. CONTRACTOR SHALL COORDINATE WITH C.A.B.C.W.U.A. (857-8200) SEVEN (7) WORKING DAYS PRIOR TO ANY WORK THAT MAY AFFECT EXISTING ABCWUA PUBLIC WATER OR SEWER UTILITIES. CONTRACTOR IS REFERRED TO SECTION 18 OF THE COA STANDARD SPECIFICATIONS. CONTRACTOR SHALL BE RESPONSIBLE FOR TIMING AND COORDINATION OF WATER SHUTOFF. EXISTING ABCWUA VALVES TO BE OPERATED BY CITY PERSONNEL ONLY.
11. FIVE (5) WORKING DAYS PRIOR TO BEGINNING CONSTRUCTION, CONTRACTOR SHALL SUBMIT TO ABCWUA A DETAILED CONSTRUCTION SCHEDULE. TWO (2) WORKING DAYS PRIOR TO CONSTRUCTION, CONTRACTOR SHALL OBTAIN A BARRICADING PERMIT FROM THE ABCWUA. CONTRACTOR SHALL NOTIFY BARRICADE ENGINEER (848-1504) PRIOR TO OCCUPYING AN INTERSECTION. REFER TO SECTION 19 OF THE STANDARD SPECIFICATIONS.
12. CONTRACTOR SHALL DETERMINE IN ADVANCE OF HIS CONSTRUCTION IF OVERHEAD UTILITIY LINES, SUPPORT STRUCTURES, POLES, GUYS, ETC. ARE AN OBSTRUCTION TO CONSTRUCTION OPERATIONS. IF ANY OF OBSTRUCTION TO CONSTRUCTION OPERATIONS IS EVIDENT, CONTRACTOR SHALL BE RESPONSIBLE FOR COORDINATING WITH THE APPROPRIATE UTILITY OWNER TO REMOVE OR SUPPORT THE UTILITY OBSTRUCTION. ANY COST ASSOCIATED WITH THIS EFFORT SHALL BE THE RESPONSIBILITY OF THE CONTRACTOR.
13. PNM WILL PROVIDE AT NO COST TO THE COUNTY OR THE CONTRACTOR THE REQUIRED PERSONNEL FOR INSPECTION OR OBSERVATION DEEMED NECESSARY BY PNM WHILE THE CONTRACTOR IS EXPOSING PNM'S CABLES. HOWEVER, THE CONTRACTOR SHALL BE CHARGED THE TOTAL COST ASSOCIATED WITH REPAIRS TO ANY DAMAGED CABLES OR FOR ANY COST ASSOCIATED WITH SUPPORTING OR RELOCATING THE POLES AND CABLES DURING CONSTRUCTION.
14. TWO (2) WORKING DAYS PRIOR TO ANY EXCAVATION, CONTRACTOR MUST CONTACT NEW MEXICO ONE CALL SYSTEM (260-1990) FOR LOCATION OF EXISTING UTILITIES.
15. PRIOR TO CONSTRUCTION, CONTRACTOR SHALL EXCAVATE AND VERIFY THE HORIZONTAL AND VERTICAL LOCATIONS OF ALL PERTINENT EXISTING UTILITIES AND/OR OBSTRUCTIONS. SHOULD A CONFLICT EXIST, THE CONTRACTOR SHALL NOTIFY THE ENGINEER SO THE CONFLICT CAN BE RESOLVED WITH A MINIMUM AMOUNT OF DELAY.
16. EXISTING UTILITY LINE LOCATIONS ARE SHOWN IN AN APPROXIMATE MANNER ONLY AND SUCH LINES MAY EXIST WHERE NONE ARE SHOWN. THE LOCATION OF ANY SUCH EXISTING LINE IS BASED UPON INFORMATION PROVIDED BY THE OTHER UTILITY COMPANY, THE OWNER, OR BY OTHERS, AND THE INFORMATION MAY BE INCOMPLETE OR MAY BE OBSOLETE BY THE TIME CONSTRUCTION COMMENCES.
17. THE ENGINEER HAS UNDERTAKEN NO FIELD VERIFICATION OF THE LOCATION, DEPTH, SIZE, OR TYPE OF EXISTING UNDERGROUND UTILITY LINES, MAKES NO REPRESENTATION PERTAINING THERETO, AND ASSUMES NO RESPONSIBILITY OR LIABILITY THEREFOR. CONTRACTOR SHALL INFORM ITSELF OF THE LOCATION OF ANY UTILITY LINE IN OR NEAR THE ARE OF THE WORK IN ADVANCE OF AND DURING EXCAVATION WORK. CONTRACTOR IS FULLY RESPONSIBLE FOR ANY AND ALL DAMAGE CAUSED BY ITS FAILURE TO LOCATE, IDENTIFY, AND PRESERVE ANY AND ALL EXISTING UTILITIES.
18. CONTRACTOR SHALL SUPPORT ALL EXISTING, UNDERGROUND UTILTY LINES WHICH BECOME EXPOSED DURING CONSTRUCTION. PAYMENT FOR SUPPORTING WORK SHALL BI INCIDENTAL TO WATER LINE AND/OR SEWER LINE COSTS.
19. CONTRACTOR IS TO SUPPORT AND MAINTAIN THE INTEGRITY OF ALL UNDERGROUND TELEPHONE, ELECTRIC CABLES AND CABLE TELEVISION UTILITIES AT NO ADDITIONAL COST TO THE OWNER. CABLE IS TO BE SUPPORTED AT A MAXIMUM OF EVERY FIFTEEN (15) FEET. CONTRACTOR SHALL COORDINATE WITH AND MAKE NECESSARY PAYMENT (IF ANY) TO UTILITY OWNER FOR DE-ENERGIZATION OF CABLES OR SUPPORT OF CABLES BY THE UTILITY OWNER.
20. CONTRACTOR SHALL ASSIST THE ENGINEER/INSPECTOR IN THE RECORDING OF DATA ON ALL UTILITY LINES AND ACCESSORIES AS REQUIRED BY THE CITY OF ALBUQUERQUE FOR THE PREPARATION OF "AS-CONSTRUCTED" DRAWINGS. CONTRACTOR SHALL NOT COVER UTILITY LINES AND ACCESSORIES UNTIL ALL DATA HAS BEEN RECORDED.
21. ALL UTILITIES AND UTILITY SERVICE LINES SHALL BE INSTALLED PRIOR TO PAVING.
22. ALL FINAL BACKFILL TRENCHES SHALL BE COMPACTED TO A MINIMUM OF 95% MAXIMUM DENSITY PER ASTM-D1557 AND AS DIRECTED BY STANDARD SPECIFICATIONS SECTION 701.14.2 AND STANDARD DRAWING NUMBER 2315.
23. CONTRACTOR SHALL PROMPTLY CLEAN UP ANY MATERIAL EXCAVATED WITHIN THE PUBLIC RIGHT-OF-WAY OR PRIVATE ROADWAY EASEMENTS SO THAT THE EXCAVATED MATERIAL IS NOT SUSCEPTIBLE TO BEING WASHED DOWN THE STREET OR INTO ANY PUBLIC DRAINAGE FACILITY.
24. REMOVALS SHALL BE DISPOSED OF OFF-SITE AND SHALL BE THE RESPONSIBILITY OF THE CONTRACTOR.
25. THE CONTRACTOR SHALL DISPOSE OF ALL UNSUITABLE MATERIAL IN AN ENVIRONMENTALLY ACCEPTABLE MANNER AT A LOCATION ACCEPTABLE TO THE PROJECT MANAGER. THERE WILL NO DIRECT COMPENSATION FOR THIS WORK.
26. CONTRACTOR SHALL CONDUCT HIS OPERATIONS IN A MANNER WHICH WILL MINIMIZE INTERFERENCE WITH LOCAL TRAFFIC.
27. ANY WORK AFFECTING AN ARTERIAL ROADWAY REQUIRES TWENTY-FOUR (24) HOURS OF NOTICE TO CITY OF ALBUQUERQUE PRIOR TO COMMENCEMENT OF CONSTRUCTION.
28. ALL EXISTING SIGNS, MARKERS, DELINEATORS, ETC. WITHIN THE CONSTRUCTION LIMITS SHALL BE REMOVED, STORED AND RE-SET BY THE CONTRACTOR.
29. WHEN ABUTTING EXISTING PAVEMENT TO NEW, SAW CUT EXISTING PAVEMENT (PER BERNALILLO COUNTY SD 2465) TO A STRAIGHT EDGE AND AT A RIGHT ANGLE , OR AS APPROVED BY THE FIELD ENGINEER. REMOVAL OF BROKEN OR CRACKED PAVEMENT WILL ALSO BE REQUIRED. THE CONTRACTOR SHALL CALL BERNALILLO COUNTY PUBLIC WORKS DEPARTMENT (848-1500) TO REQUEST AN INSPECTOR TO VERIFY PAVEMENT THICKNESS.
30. REMOVAL OF EXISTING CURB AND GUTTER OR SIDEWALK SHALL BE TO THE NEAREST JOINT OR SAW CUT.
31. AT HIS OWN EXPENSE, CONTRACTOR SHALL ASSUME RESPONSIBILITY FOR ANY DAMAGE TO EXISTING PAVEMENT, PAVEMENT MARKINGS, CURB AND GUTTER, HANDICAP RAMPS, AND SIDEWALK DURING CONSTRUCTION APART FROM THOSE SECTIONS INDICATED FOR REMOVAL ON THE PLANS AND SHALL REPAIR OR REPLACE, PER STANDARD SPECIFICATIONS.
32. ALL STREET STRIPING, ALTERED OR DESTROYED, SHALL BE REPLACED WITH PLASTIC REFLECTORIZED PAVEMENT MARKINGS BY CONTRACTOR TO SAME LOCATION AS EXISTING, OR AS INDICATED BY THIS PLAN SET.
33. CONTRACTOR SHALL MAINTAIN A GRAFFITI-FREE WORK SITE. CONTRACTOR SHALL PROMPTLY REMOVE ANY AND ALL GRAFFITI FROM EQUIPMENT, WHEATHER PERMANENT OR TEMPORARY.
34. ELECTRONIC MARKER DISKS (EMD) SHALL BE PLACED ACCORDING TO SECTION 170 OR THE CITY OF ALBUQUERQUE STANDARD SPECIFICATIONS FOR PUBLIC WORKS CONSTRUCTION, 1986 EDITION AS REVISED THROUGH UPDATE #7.
35. THE CONTRACTOR WILL CONFINE HIS WORK WITHIN THE CONSTRUCTION EASEMENT LIMITS AND/OR RIGHT-OF-WAY OR PROVIDE COPIES OF AGREEMENTS WITH ADJACENT LANDOWNERS TO THE COUNTY.
36. THE CONTRACTOR SHALL PERFORM ALL WORK IN ACCORDANCE WITH THE NATIONAL POLLUTANT DISCHARGE SYSTEM (NPDES) REQUIREMENTS INCLUDING, BUT NOT LIMITED TO, OBTAINING AN NPDES PERMIT DURING CONSTRUCTION, SUBMISSION OF A COMPLETED NOTICE OR INTENT (NOI) APPLICATION, AND SUBMISSION OF A COMPLETED NOTICE OF TERMINATION (NOT). THE CONTRACTOR SHALL ALSO BE RESPONSIBLE FOR TE IMPLEMENTATION OF AND INSPECTION REPORTS FOR THE STORM WATER POLLUTION PREVENTION PLAN (SWPPP). IT IS THE RESPONSIBILITY OF THE CONTRACTOR TO HAVE THE SWPPP REVIEWED AND APPROVED BY BERNALILLO COUNTY PUBLIC WORKS DIVISION, AT NO ADDITIONAL COST TO THE COUNTY, PRIOR TO IMPLEMENTATION OF THE SWPPP.
37. NMDOT HAS JURISDICTION OVER COORS BOULEVARD. THE CONTRACTOR SHALL COORDINATE ALL CONSTRUCTION WORK WITHIN THE COORS RIGHT-OF-WAY WITH NMDOT AND OBTAIN ALL PERMITS FOR SAID CONSTRUCTION WORK.
38. ALL WATER LINES SHALL CONFORM TO AWWA STANDARD C900 DR18.
39. WATER LINES AND SANITARY SEWER LINES SHALL BE CONSTRUCTED IN ACCORDANCE WITH CITY OF ALBUQUERQUE STANDARD SPECIFICATIONS FOR PUBLIC WORKS CONSTRUCTION, 1986 EDITION, THROUGH THE MOST RECENT UPDATE.

LEGEND

	NEW CURB AND GUTTER & SIDEWALK	●	PROPOSED SAS MANHOLE	—SAS—	PROPOSED SANITARY SEWER LINE
	EXISTING CURB AND GUTTER & SIDEWALK	○	EXISTING SAS MANHOLE	- -SAS- -	EXISTING SANITARY SEWER LINE
	PROPOSED FIRE HYDRANT	Ⓦ	PROPOSED WATER METER	—6"W—	PROPOSED WATER LINE
	PROPOSED WATER VALVE	—S—	PROPOSED SANITARY SEWER SERVICE	- -6"W- -	EXISTING WATER LINE
	PROPOSED WATER VALVE	(S 83°39'25" W)	RECORD BEARING AND DISTANCE	S 83°39'25" W	MEASURED BEARING AND DISTANCE

ENGINEERS STAMP & SIGNATURE	APPROVALS	ENGINEER	DATE
EDWARD J. LOSINSKI, NEW MEXICO, 11376, REGISTERED PROFESSIONAL ENGINEER	BERNALILLO COUNTY – PUBLIC WORKS DIVISION		4 MAR 08
	BERNALILLO COUNTY – FIRE MARSHALL		
	WATER/WASTEWATER		1-29-08
			3-5-08

CITY PROJECT No.	BERNALILLO COUNTY PROJECT No.	SHEET	OF
7785.82	80003	1	16

JEL & ASSOCIATES, LLC
P.O. BOX 3180/250 BAZAN LP.
CORRALES, N.M. 87048
505 823-1556
505-823-3192 FAX
jelassoc@comcast.net
ENGINEERING • CONSULTING

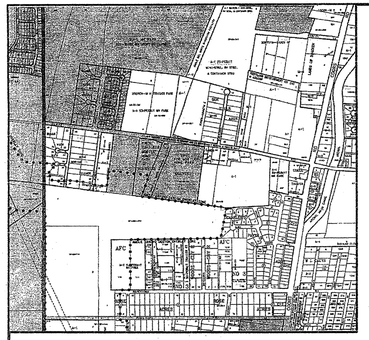

N.T.S.

VICINITY MAP NUMBER N-10

LEGAL DESCRIPTION

PLAT OF
SANTANGELO WEST SUBDIVISION
WITHIN
PROJECTED SECTION 3, TOWNSHIP 9 NORTH, RANGE 2 EAST, N.M.P.M.
WITHIN THE TOWN OF ATRISCO GRANT
CITY OF ALBUQUERQUE
BERNALILLO COUNTY, NEW MEXICO
AUGUST, 2007

CDRA CASE No.: _____

UTILITY APPROVALS:

PNM ELECTRIC SERVICES DATE

PNM GAS SERVICES DATE

QWEST TELECOMMUNICATIONS DATE

COMCAST DATE

CITY SURVEYOR DATE

AMAFCA DATE

BERNALILLO COUNTY PUBLIC WORKS DIVISION DATE

BERNALILLO COUNTY ENVIRONMENTAL HEALTH DEPARTMENT DATE

BERNALILLO COUNTY ZONING DEPARTMENT DATE

BERNALILLO COUNTY FIRE MARSHALL DATE

BERNALILLO COUNTY DEVELOPMENT REVIEW AUTHORITY, CHAIR DATE

PURPOSE OF PLAT:
THE PURPOSE OF THIS PLAT IS TO DIVIDE TRACT INTO 87 LOTS AND 6 TRACTS, DEDICATE ADDITIONAL RIGHT OF WAY AND GRANT ANY EASEMENTS AS SHOWN.

GENERAL NOTES:
1: UNLESS NOTED, No. 4 REBAR WITH CAP STAMPED P.S.#11463 WERE SET AT ALL PROPERTY CORNERS.
2: THIS PLAT SHOWS ALL EASEMENTS OF RECORD.
3: TOTAL AREA OF PROPERTY: 18.3548 ACRES.
4: TALOS LOG NO. _____
5: BASIS OF BEARINGS IS THE NEW MEXICO STATE PLANE COORDINATE SYSTEM, CENTRAL ZONE, NAD 1927.
6: DISTANCES ARE GROUND, BEARINGS ARE GRID.
7: BEARINGS AND DISTANCES SHOWN IN PARENTHESIS ARE RECORD.
8: DATE OF FIELD WORK: _____.
9: CURRENT ZONING: _____.

THIS IS TO CERTIFY THAT TAXES ARE CURRENT AND PAID ON
UPC#_____
PROPERTY OWNER OF RECORD:_____
BERNALILLO CO. TREASURER'S OFFICE:_____

FREE CONSENT

THE SUBDIVISION HEREON DESCRIBED IS WITH THE FREE CONSENT AND IN ACCORDANCE WITH THE DESIRES OF THE UNDERSIGNED OWNERS AND PROPRIETOR THEREOF. SAID OWNER / PROPRIETOR DOES HEREBY GRANT ANY AND ALL EASEMENTS AS MAY BE CREATED BY THIS PLAT. THOSE SIGNING AS OWNERS WARRANT THAT THEY HOLD AMONG THEM COMPLETE AND INDEFEASIBLE TITLE IN FEE SIMPLE TO THE LAND SUBDIVIDED.

_____ DATE

ACKNOWLEDGMENT
STATE OF NEW MEXICO)
COUNTY OF BERNALILLO) S.S.
THIS INSTRUMENT WAS ACKNOWLEDGED BEFORE ME A NOTARY PUBLIC
THIS _____, DAY OF _____, 20_____,
BY: _____
OWNERS NAME
MY COMMISSION EXPIRES:_____ BY:_____
NOTARY PUBLIC

SURVEYORS CERTIFICATE:
STATE OF NEW MEXICO)
COUNTY OF BERNALILLO) S.S.

I, ANTHONY L. HARRIS, A DULY PROFESSIONAL LICENSED LAND SURVEYOR, UNDER THE LAWS OF THE STATE OF NEW MEXICO, DO HEREBY CERTIFY THAT THE PLAT WAS PREPARED UNDER MY DIRECT SUPERVISION, THAT I AM RESPONSIBLE FOR SAID PLAT AND MEETS THE REQUIREMENTS FOR MONUMENTATION AND SURVEY OF THE ALBUQUERQUE SUBDIVISION ORDINANCE AND IS TRUE AND CORRECT TO THE BEST OF MY KNOWLEDGE AND BELIEF AND MEETS THE MINIMUM REQUIREMENTS FOR LAND SURVEYS AS SET FORTH BY THE STATE OF NEW MEXICO.

GIVEN UNDER MY HAND AND SEAL AT ALBUQUERQUE, NEW MEXICO,
THIS _____ DAY OF _____, 2007.

_____
ANTHONY L. HARRIS. P.S. # 11463

HSS HARRIS SURVEYING, INC. 8115-B JOURNAL STREET N.E. ALBUQUERQUE, NEW MEXICO 87110 PHONE: (505) 889-8056 FAX: (505) 889-8645

AS BUILT INFORMATION
Contractor
Work Staked By
Staked By
Inspector's Acceptance By
Field Verification By
Drawings Corrected By

MICRO-FILM INFORMATION
Recorded By
Date
No.

BENCH MARKS
ELEVATIONS ARE BASED ON CITY OF ALBUQUERQUE STATION NO. "NM45-7A" HAVING AN ELEVATION OF 4953.487.

SURVEY INFORMATION
FIELD NOTES
No.

ENGINEERS SEAL

No.	Date	REMARKS	Date
		REVISIONS	

DESIGN
Designed By E.J.L. Date
Drawn By T.D.S. Date
Checked By E.J.L. Date

JEL & ASSOCIATES, LLC
P.O. BOX 3180/250 BAZAN LP.
CORRALES, N.M. 87048
505 823-1556
505-823-2192 FAX
jelassoc@comcast.net
ENGINEERING • CONSULTING

CITY OF ALBUQUERQUE
PUBLIC WORKS DEPARTMENT
ENGINEERING GROUP

TITLE:
SUNSHINE WEST SUBDIVISION 1
SURVEY PLAT

Last Design Update | Mo./Day/Yr. | Mo./Day/Yr.

City Project No.	Zone Map NO.	Sheet	Of
7785.82	N-10	2A	16

PLAT OF
SANTANGELO WEST SUBDIVISION
WITHIN
PROJECTED SECTION 3, TOWNSHIP 9 NORTH, RANGE 2 EAST, N.M.P.M.
WITHIN THE TOWN OF ATRISCO GRANT
CITY OF ALBUQUERQUE
BERNALILLO COUNTY, NEW MEXICO
AUGUST, 2007

AS BUILT INFORMATION	
Contractor	
Work Staked By	
Inspector's Acceptance By	
Field Verification By	
Drawings Corrected By	

MICRO-FILM INFORMATION

Recorded By	Date
No.	

BENCH MARKS

ELEVATIONS ARE BASED ON CITY OF ALBUQUERQUE STATION NO. "NM45-7A" HAVING AN ELEVATION OF 4953.487.

SURVEY INFORMATION

FIELD NOTES

No.	

ENGINEERS SEAL

REVISIONS

No.	Date	REMARKS	Date

DESIGN

Designed By	E.J.L.	Date
Drawn By	T.D.S.	Date
Checked By	E.J.L.	Date

JEL & ASSOCIATES, LLC
P.O. BOX 3180/250 BAZAN LP.
CORRALES, N.M. 87048
505 823-1556
505-823-2192 FAX
jelassoc@comcast.net
ENGINEERING O CONSULTING

CITY OF ALBUQUERQUE
PUBLIC WORKS DEPARTMENT
ENGINEERING GROUP

TITLE: SUNSHINE WEST SUBDIVISION 1
SURVEY PLAT

Last Design Update	Mo./Day/Yr.	Mo./Day/Yr.

City Project No.	Zone Map NO.	Sheet	Of
7785.82	N-10	2B	16

PLAT OF
SANTANGELO WEST SUBDIVISION
WITHIN
PROJECTED SECTION 3, TOWNSHIP 9 NORTH, RANGE 2 EAST, N.M.P.M.
WITHIN THE TOWN OF ATRISCO GRANT
CITY OF ALBUQUERQUE
BERNALILLO COUNTY, NEW MEXICO
AUGUST, 2007

AS BUILT INFORMATION	
Contractor	
Work Staked By	
Inspector's Acceptance By	
As-Built Verification By	
Drawings Corrected By	
MICRO-FILM INFORMATION	
Recorded By	Date
No.	

SURVEY INFORMATION	
FIELD NOTES	
No.	

BENCH MARKS
ELEVATIONS ARE BASED ON CITY OF ALBUQUERQUE STATION NO. "NM45-7A" HAVING AN ELEVATION OF 4953.487.

ENGINEERS SEAL

REVISIONS		
No.	Date	REMARKS	Date

DESIGN

Designed By	E.J.L.	Date
Drawn By	T.D.S.	Date
Checked By	E.J.L.	Date

JEL & ASSOCIATES, LLC
P.O. BOX 3180/250 BAZAN LP.
CORRALES, N.M. 87048
505 823-1556
505-823-2192 FAX
jelassoc@comcast.net
ENGINEERING O CONSULTING

CITY OF ALBUQUERQUE
PUBLIC WORKS DEPARTMENT
ENGINEERING GROUP

TITLE: SUNSHINE WEST SUBDIVISION 1
SURVEY PLAT

Last Design Update	Mo./Day/Yr.	Mo./Day/Yr.

City Project No.	Zone Map NO.	Sheet	Of
7785.82	N-10	2C	16

PLAT OF
SANTANGELO WEST SUBDIVISION
WITHIN
PROJECTED SECTION 3, TOWNSHIP 9 NORTH, RANGE 2 EAST, N.M.P.M.
WITHIN THE TOWN OF ATRISCO GRANT
CITY OF ALBUQUERQUE
BERNALILLO COUNTY, NEW MEXICO
AUGUST, 2007

AS BUILT INFORMATION
Contractor
Work Staked By
Inspector's Acceptance By
Field Verification By
Drawings Corrected By
MICRO-FILM INFORMATION
Recorded By Date
No.

BENCH MARKS
ELEVATIONS ARE BASED ON CITY OF ALBUQUERQUE STATION NO. "NM45-7A" HAVING AN ELEVATION OF 4953.487.

SURVEY INFORMATION
FIELD NOTES
No.

ENGINEERS SEAL

REVISIONS
No. Date REMARKS Date

DESIGN
Designed By E.J.L. Date
Drawn By T.D.S. Date
Checked By E.J.L. Date

JEL & ASSOCIATES, LLC
P.O. BOX 3180/250 BAZAN LP.
CORRALES, N.M. 87048
505 823-1556
505-823-2192 FAX
jelassoc@comcast.net
ENGINEERING • CONSULTING

CITY OF ALBUQUERQUE
PUBLIC WORKS DEPARTMENT
ENGINEERING GROUP

TITLE: SUNSHINE WEST SUBDIVISION 1
SURVEY PLAT

Last Design Update Mo./Day/Yr. Mo./Day/Yr.

City Project No. 7785.82 | Zone Map NO. N-10 | Sheet 2D Of 16

PLAT OF

SANTANGELO WEST SUBDIVISION

WITHIN

PROJECTED SECTION 3, TOWNSHIP 9 NORTH, RANGE 2 EAST, N.M.P.M.

WITHIN THE TOWN OF ATRISCO GRANT

CITY OF ALBUQUERQUE

BERNALILLO COUNTY, NEW MEXICO

AUGUST, 2007

CURVE TABLE

NUMBER	DELTA ANGLE	CHORD DIRECTION	RADIUS	ARC LENGTH	CHORD LENGTH
C1	01°08'57"	S 11°58'59" W	31310.20	627.90	627.89
C2	25°17'36"	N 01°25'52" W	175.00	77.26	76.63
C3	25°17'36"	N 01°25'52" W	225.00	99.33	98.52
C4	90°00'00"	S 30°55'20" W	25.00	39.27	35.36
C5	90°00'00"	N 59°04'40" W	25.00	39.27	35.36
C6	65°22'11"	S 43°14'15" W	75.00	85.57	81.00
C7	99°08'59"	S 79°59'00" W	475.00	67.56	67.51
C8	48°11'23"	N 71°49'59" W	25.00	21.03	20.41
C9	276°22'46"	N 05°55'40" W	50.00	241.19	66.67
C10	48°11'23"	N 59°58'38" E	25.00	21.03	20.41
C11	88°08'59"	S 79°59'00" W	525.00	74.68	74.61
C12	89°59'59"	S 59°04'40" E	25.00	39.27	35.36
C13	224°16'55"	N 07°58'22" W	150.00	587.17	277.88
C14	27°21'26"	S 89°36'03" W	100.00	47.75	47.29
C15	16°08'10"	N 67°54'16" E	100.00	27.99	27.90
C16	90°00'00"	S 30°55'20" W	25.00	39.27	35.36
C17	15°07'33"	S 83°29'07" W	275.00	72.60	72.39
C18	48°11'23"	N 64°51'25" W	25.00	21.03	20.41
C19	276°22'46"	N 01°08'54" E	50.00	241.19	66.67
C20	234°20'24"	N 03°08'26" W	150.00	613.50	266.90
C21	36°06'25"	N 85°01'27" W	100.00	66.51	65.29
C22	28°29'33"	N 73°56'08" E	25.00	12.43	12.38
C23	48°11'23"	N 66°57'12" E	25.00	21.03	20.41
C24	15°07'34"	S 83°29'07" W	325.00	85.80	85.55
C25	12°15'34"	S 82°03'08" W	425.00	90.94	90.76
C26	90°00'01"	S 59°04'40" E	25.00	39.27	35.36
C27	90°00'00"	N 30°55'20" E	25.00	39.27	35.36
C28	65°22'11"	S 43°14'15" W	125.00	142.61	135.00
C29	59°58'31"	S 15°54'35" W	315.00	329.73	314.88
C30	85°08'23"	N 03°19'39" E	25.00	37.15	33.82
C31	118°39'57"	S 45°15'19" W	265.00	548.84	455.88
C32	70°31'44"	N 40°08'50" W	25.00	30.77	28.87
C33	250°31'44"	N 49°51'10" E	50.00	218.63	81.65
C34	41°44'38"	S 83°42'59" W	315.00	229.50	224.46
C35	77°54'47"	S 78°11'56" E	25.00	34.00	31.44
C36	36°10'09"	N 57°19'37" W	275.00	173.60	170.73
C37	253°52'06"	S 22°20'45" E	56.00	248.13	89.52
C38	84°36'42"	S 73°01'33" W	25.00	36.92	33.65
C39	25°25'33"	N 51°57'19" W	225.00	99.85	99.03
C40	114°27'04"	S 43°08'53" W	165.00	329.60	277.47
C41	48°27'10"	N 55°24'01" W	25.00	21.14	20.52
C42	137°03'17"	N 80°16'17" E	150.11	359.06	279.37
C43	50°18'05"	S 79°26'16" W	375.00	329.22	318.75
C44	15°36'17"	N 48°49'25" W	375.00	102.13	101.82
C45	10°43'50"	N 61°39'38" W	375.00	70.23	70.13
C46	08°03'09"	N 71°23'08" W	375.00	52.70	52.66
C47	22°39'01"	S 21°52'40" W	75.00	29.65	29.46
C48	42°43'10"	S 54°33'45" W	75.00	55.92	54.63
C49	15°59'50"	S 18°33'05" W	125.00	34.90	34.79
C50	18°51'45"	S 35°58'52" W	125.00	41.15	40.97
C51	13°17'11"	S 52°03'20" W	125.00	28.99	28.92
C52	17°13'25"	S 67°18'38" W	125.00	37.58	37.43
C53	82°45'01"	N 12°42'09" W	175.00	8.40	8.40
C54	22°32'35"	N 00°03'21" W	175.00	68.85	68.41
C55	16°36'23"	N 02°54'45" E	225.00	65.21	64.99
C56	08°41'13"	N 09°44'03" W	225.00	34.11	34.08
C57	28°14'45"	N 89°57'17" W	100.00	49.30	48.80
C58	00°53'20"	N 76°16'34" W	100.00	1.55	1.55
C59	19°05'52"	S 85°22'50" E	150.00	50.00	49.77
C60	40°12'08"	N 64°58'10" E	150.00	105.25	103.10
C61	42°06'44"	N 23°48'44" E	150.00	110.25	107.78
C62	38°17'31"	N 16°23'24" W	150.00	100.25	98.39
C63	40°12'08"	N 55°38'13" W	150.00	105.25	103.10
C64	35°22'14"	S 86°34'36" W	150.00	92.60	91.14
C65	09°00'19"	S 64°23'26" W	150.00	23.58	23.55
C66	01°55'06"	S 76°52'54" W	475.00	15.90	15.90
C67	06°13'53"	S 80°57'23" W	475.00	51.66	51.63
C68	47°11'29"	S 71°20'02" E	50.00	41.18	40.03
C69	40°12'08"	N 64°58'10" E	50.00	35.08	34.37
C70	45°56'29"	N 21°53'52" E	50.00	40.09	39.03
C71	34°27'47"	N 18°18'16" W	50.00	30.07	29.62
C72	40°12'08"	N 55°38'13" W	50.00	35.08	34.37
C73	49°53'00"	S 79°19'13" W	50.00	43.53	42.17
C74	18°29'46"	S 45°07'56" W	50.00	16.14	16.07
C75	00°29'54"	S 83°49'23" W	525.00	4.57	4.57

CURVE TABLE

NUMBER	DELTA ANGLE	CHORD DIRECTION	RADIUS	ARC LENGTH	CHORD LENGTH
C76	05°54'57"	S 80°36'57" W	525.00	54.21	54.18
C77	01°44'08"	S 76°47'25" W	525.00	15.90	15.90
C78	01°00'12"	S 76°25'27" W	100.00	1.75	1.75
C79	29°32'45"	N 88°18'05" W	100.00	51.57	51.00
C80	07°33'28"	N 69°44'58" W	100.00	13.19	13.18
C81	18°08'39"	S 75°02'31" E	150.00	47.50	47.30
C82	30°02'59"	N 80°51'42" E	150.00	78.67	77.77
C83	38°17'31"	N 46°41'28" E	150.00	100.25	98.39
C84	42°06'44"	N 06°29'20" E	150.00	110.25	107.78
C85	40°12'08"	N 34°40'06" W	150.00	105.25	103.10
C86	40°12'08"	N 74°52'13" W	150.00	105.25	103.10
C87	25°20'21"	S 72°21'32" W	150.00	66.34	65.80
C88	06°07'27"	N 62°45'06" E	25.00	2.67	2.67
C89	22°22'05"	N 76°59'52" E	25.00	9.76	9.70
C90	06°03'14"	S 85°09'18" W	425.00	44.91	44.89
C91	06°12'20"	S 79°01'30" W	425.00	46.03	46.01
C92	26°57'38"	S 54°14'32" E	50.00	23.53	23.31
C93	46°26'26"	N 89°03'26" E	50.00	40.53	39.43
C94	34°27'47"	N 48°36'20" E	50.00	30.07	29.62
C95	45°56'29"	N 08°24'12" E	50.00	40.09	39.03
C96	40°12'08"	N 34°40'06" W	50.00	35.08	34.37
C97	40°12'08"	N 74°52'13" W	50.00	35.08	34.37
C98	42°18'18"	S 63°56'37" W	50.00	36.80	35.98
C99	41°22'32"	N 63°32'47" E	25.00	18.05	17.66
C100	06°48'50"	N 87°38'28" E	25.00	2.97	2.97
C101	86°59'58"	S 87°32'54" W	325.00	39.70	39.68
C102	08°07'35"	S 79°59'08" W	325.00	46.16	46.06
C103	04°14'52"	S 11°57'13" E	315.00	23.35	23.35
C104	10°49'38"	S 08°12'19" E	265.00	50.08	50.00
C105	09°49'42"	S 04°54'56" E	315.00	54.03	53.97
C106	10°49'38"	S 02°37'20" W	265.00	50.08	50.00
C107	09°47'32"	S 04°53'41" W	315.00	53.83	53.77
C108	09°49'00"	S 14°41'57" W	315.00	53.97	53.90
C109	10°49'38"	S 13°26'58" W	265.00	50.08	50.00
C110	06°54'40"	S 22°19'07" W	265.00	31.97	31.95
C111	09°48'57"	S 24°30'56" W	315.00	53.97	53.90
C112	09°47'58"	S 34°19'23" W	315.00	53.88	53.81
C113	06°40'28"	S 42°33'37" W	315.00	36.69	36.67
C114	10°49'38"	S 42°00'35" W	265.00	50.08	50.00
C115	10°49'38"	S 31°11'17" W	265.00	50.08	50.00
C116	10°49'38"	S 32°50'33" W	265.00	50.08	50.00
C117	00°18'11"	N 14°04'40" W	249.63	1.32	1.32
C118	10°47'26"	S 08°11'44" E	165.56	31.18	31.13
C119	04°35'02"	S 00°29'58" E	165.00	13.20	13.20
C120	06°14'36"	S 04°54'51" W	165.00	17.98	17.97
C121	10°49'38"	S 13°26'58" W	165.00	31.18	31.13
C122	06°54'40"	S 22°19'07" W	165.00	19.90	19.89
C123	10°49'38"	S 31°11'17" W	165.00	31.18	31.13
C124	10°49'38"	S 42°00'35" W	165.00	31.18	31.13
C125	10°49'38"	S 52°50'33" W	165.00	31.18	31.13
C126	10°49'38"	S 63°40'11" W	165.00	31.18	31.13
C127	10°49'38"	S 74°29'50" W	165.00	31.18	31.13
C128	10°49'38"	S 85°19'28" W	165.00	31.18	31.13
C129	09°38'08"	N 84°26'39" W	165.00	27.75	27.72
C130	07°53'35"	N 75°40'48" W	25.00	3.44	3.44
C131	40°33'35"	N 51°27'13" W	25.00	17.70	17.33
C132	11°55'38"	S 37°09'54" E	150.11	31.25	31.19
C133	30°01'30"	S 58°08'28" E	150.11	78.66	77.76
C134	40°10'21"	N 86°45'37" E	150.11	105.25	103.10
C135	42°05'54"	N 45°37'29" E	150.11	110.29	107.83
C136	12°49'53"	N 18°09'35" E	150.11	33.62	33.55
C137	10°49'38"	S 63°40'11" W	265.00	50.08	50.00
C138	10°49'38"	S 74°29'50" W	265.00	50.08	50.00
C139	10°49'38"	S 85°19'28" W	265.00	50.08	50.00
C140	13°51'01"	N 82°20'13" W	265.00	64.06	63.90
C141	21°50'12"	S 15°48'05" E	50.00	19.06	18.94
C142	46°26'26"	S 49°56'24" E	50.00	40.53	39.43
C143	40°12'08"	N 86°44'20" E	50.00	35.08	34.37
C144	45°56'29"	N 43°40'02" E	50.00	40.09	39.03
C145	34°27'47"	N 03°27'34" E	50.00	30.07	29.62
C146	42°25'47"	N 34°58'53" W	50.00	37.03	36.19
C147	19°12'56"	N 65°48'14" W	50.00	16.77	16.69
C148	05°14'04"	N 78°01'44" W	315.00	28.78	28.77
C149	09°46'41"	N 85°38'07" W	315.00	53.76	53.69
C150	09°46'41"	S 84°41'12" W	315.00	53.76	53.69

CURVE TABLE

NUMBER	DELTA ANGLE	CHORD DIRECTION	RADIUS	ARC LENGTH	CHORD LENGTH
C151	09°46'41"	S 74°54'31" W	315.00	53.76	53.69
C152	07°10'30"	S 66°25'55" W	315.00	39.45	39.42
C153	08°55'58"	N 76°52'37" W	375.00	19.18	19.18
C154	10°53'26"	N 83°47'15" W	375.00	71.28	71.17
C155	10°55'29"	S 85°18'18" W	375.00	71.50	71.39
C156	09°38'39"	S 75°01'14" W	375.00	63.12	63.05
C157	01°16'54"	S 69°33'27" W	375.00	8.39	8.39
C158	14°37'47"	S 61°36'06" W	375.00	95.75	95.49
C159	34°23'16"	N 58°13'04" W	375.00	225.07	221.70
C160	06°45'04"	N 42°37'05" W	275.00	32.40	32.38
C161	10°38'07"	N 51°18'40" W	275.00	51.05	50.97
C162	10°43'50"	N 61°39'38" W	275.00	51.50	51.43
C163	08°03'09"	N 71°23'08" W	275.00	38.65	38.62
C164	23°40'40"	N 87°15'02" W	56.00	23.14	22.98
C165	26°39'00"	S 67°35'08" W	56.00	26.05	25.81
C166	25°47'45"	S 41°21'46" W	56.00	25.21	25.00
C167	31°04'25"	S 12°55'41" W	56.00	30.37	30.00
C168	133°19'07"	S 69°16'05" E	56.00	130.30	102.83
C169	13°21'09"	N 37°23'47" E	56.00	13.05	13.02
C170	14°18'59"	N 57°30'36" W	225.00	56.22	56.07
C171	11°06'34"	N 44°47'50" W	225.00	43.63	43.56

AS BUILT INFORMATION

Contractor

Work Staked By

Staking Checked By

Acceptance By

Field Book

Verification By

Drawings Corrected By

MICRO-FILM INFORMATION

Recorded By

Date

No.

BENCH MARKS

ELEVATIONS ARE BASED ON CITY OF ALBUQUERQUE STATION NO. "NM45-7A" HAVING AN ELEVATION OF 4953.487.

SURVEY INFORMATION

FIELD NOTES

No.

ENGINEERS SEAL

No.	Date	REMARKS

REVISIONS

DESIGN

Designed By E.J.L. Date

Drawn By T.D.S. Date

Checked By E.J.L. Date

JEL & ASSOCIATES, LLC

P.O. BOX 3180/250 BAZAN LP.
CORRALES, N.M. 87048
505 823-1556
505-823-2192 FAX
jelassoc@comcast.net

ENGINEERING CONSULTING

CITY OF ALBUQUERQUE
PUBLIC WORKS DEPARTMENT
ENGINEERING GROUP

TITLE: SUNSHINE WEST SUBDIVISION 1
SURVEY PLAT

Last Design Update

Mo./Day/Yr.	Mo./Day/Yr.

City Project No. 7785.82

Zone Map NO. N-10

Sheet 2E Of 16

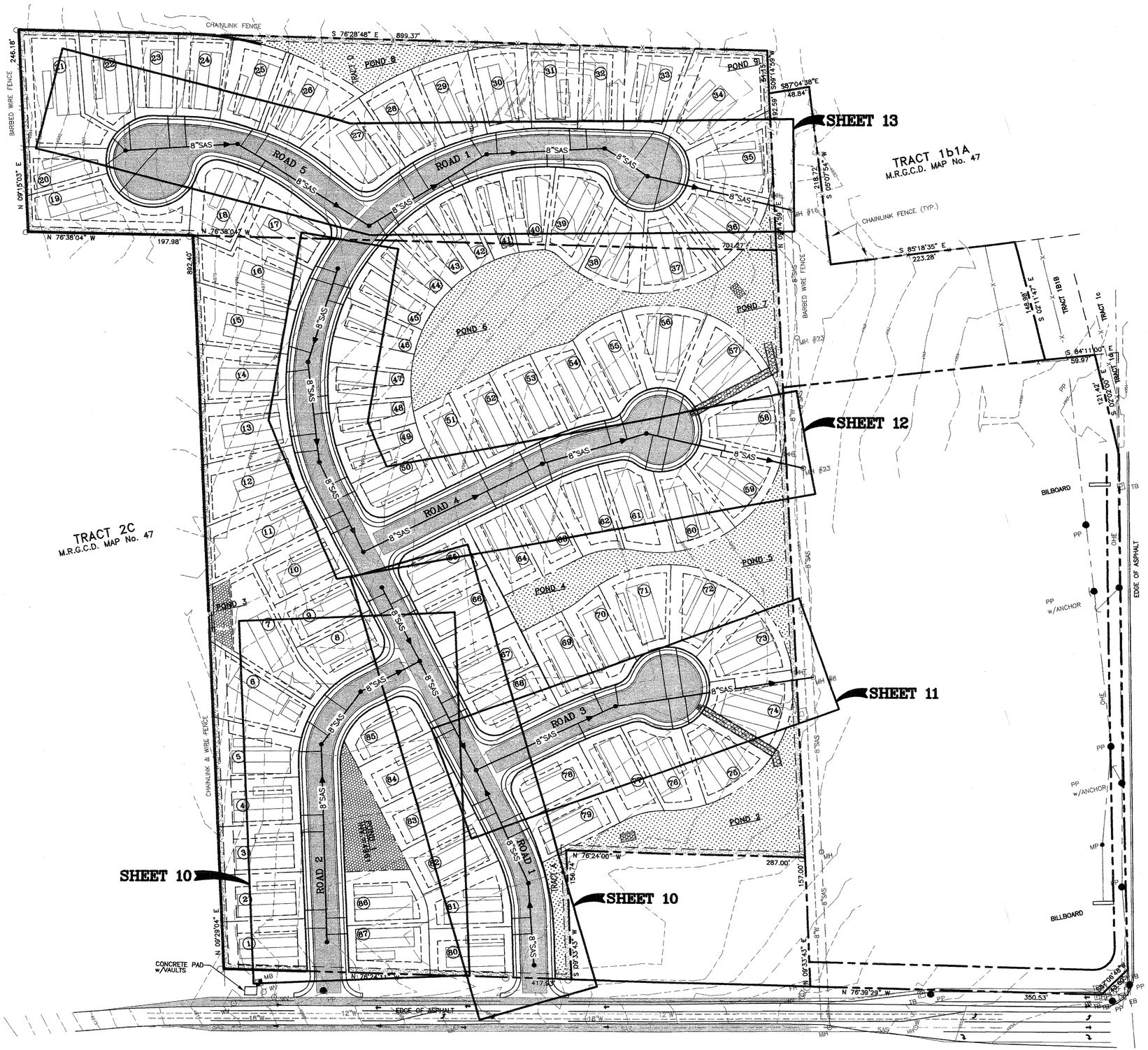

AS BUILT INFORMATION

Contractor
Work Staked By
Inspector's Acceptance By
Field Verification By
Drawings Corrected By

MICRO-FILM INFORMATION

Recorded By
Date
No.

SURVEY INFORMATION

FIELD NOTES

No.

BENCH MARKS

ELEVATIONS ARE BASED ON CITY OF ALBUQUERQUE STATION NO. "NM45-7A" HAVING AN ELEVATION OF 4953.487.

ENGINEERS SEAL

EDWARD J. ALESSI
NEW MEXICO
6519
12-6-07
REGISTERED PROFESSIONAL ENGINEER

No.	Date	REMARKS	Date
		REVISIONS	
		DESIGN	

Designed By E.J.L. Date
Drawn By T.D.S. Date
Checked By E.J.L. Date

JEL & ASSOCIATES, LLC
P.O. BOX 3180/250 BAZAN LP.
CORRALES, N.M. 87048
505 823-1556
505-823-2192 FAX
jelassoc@comcast.net
ENGINEERING O CONSULTING

CITY OF ALBUQUERQUE
PUBLIC WORKS DEPARTMENT
ENGINEERING GROUP

TITLE:

SUNSHINE WEST SUBDIVISION 1 OVERALL SEWER LAYOUT PLAN

12-6-07

Last Design Update Mo./Day/Yr. Mo./Day/Yr.

City Project No.	Zone Map NO.	Sheet	Of
7785.82	N-10	3	16

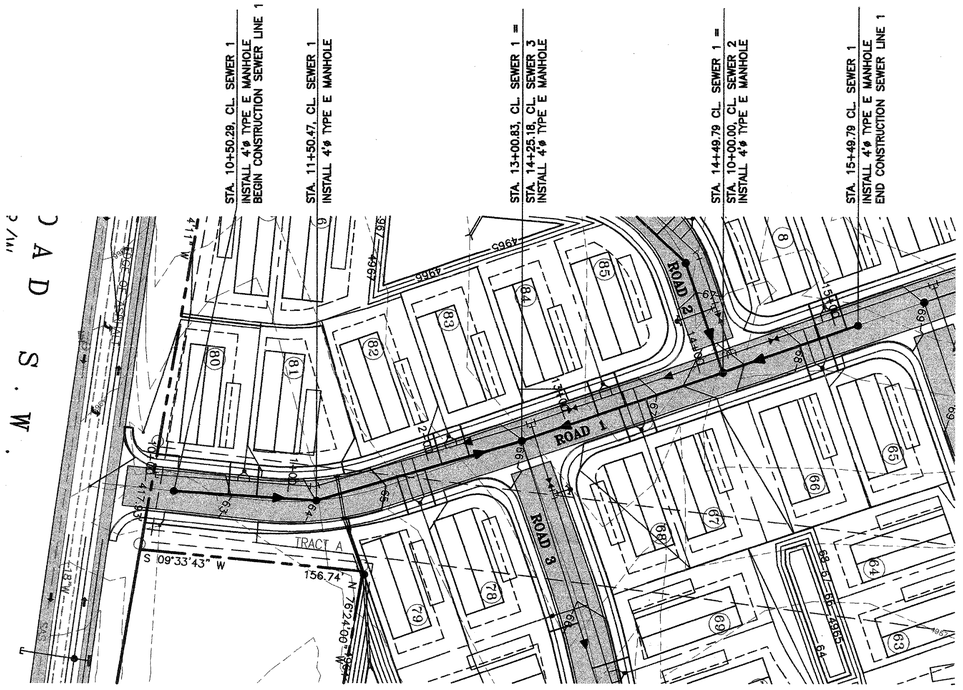

SCALE: HORIZ. 1" = 50'
VERT. 1" = 5'

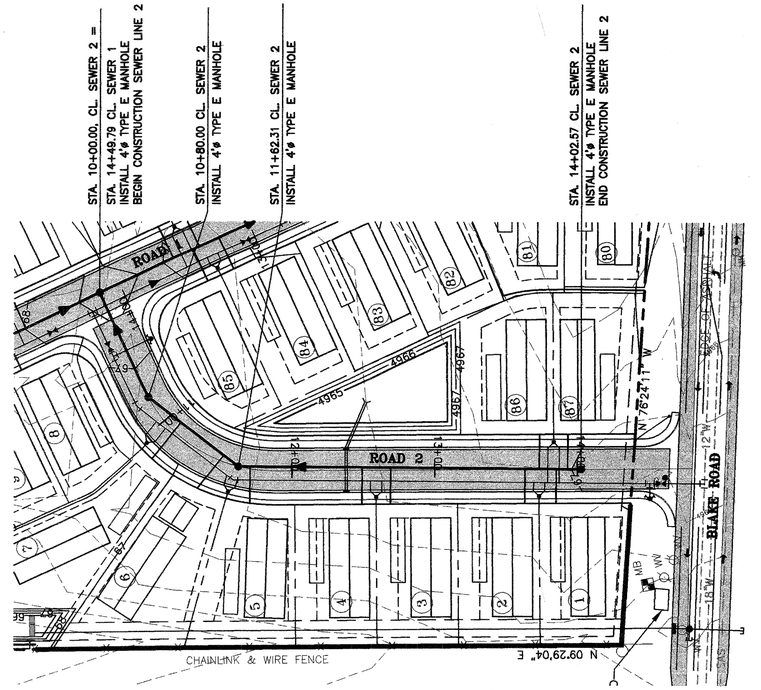

SCALE: HORIZ. 1" = 50'
VERT. 1" = 5'

SEWER SERVICE LINE TABLE			
ROADWAY 1			
STA./OFFSET	LOT	INV/MAIN	INV/ROW
10+88/1.48'LT	80	4955.94	4956.41
11+08/2.26' LT.	81	4955.72	4956.18
12+09/3.60' LT.	79	4954.61	4955.18
12+30/2.81' LT.	78	4954.38	4954.97
12+42/2.29' LT.	82	4954.25	4954.69
12+63/1.50' LT.	83	4954.02	4954.49
13+58/0'	84	4954.94	4954.44
13+73/0'	68	4954.03	4954.53
13+78/0'	85	4954.06	4954.56
13+93/0'	67	4954.16	4954.66
15+07/0'	66	4955.94	4956.44
15+22/0'	8	4956.33	4956.83
15+27/0'	65	4956.46	4956.96
15+42/0'	9	4956.85	4957.35
ROADWAY 2			
STA./OFFSET	LOT	INV/MAIN	INV/ROW
11+09/7.68' LT.	7	4955.15	4955.81
11+50/4.45' LT.	6	4955.39	4955.98
11+70/1.68' LT.	5	4955.51	4956.05
12+49/2.13' LT.	4	4955.99	4956.53
12+69/1.85' LT.	3	4956.11	4956.65
13+63/0.55' LT.	2	4956.67	4957.18
13+73/0.41' LT.	86	4956.73	4957.22
13+85/0.24' LT.	1	4956.80	4957.30
13+93/0.13' LT.	87	4956.85	4957.35

GENERAL NOTES:

1. ALL SEWER SERVICE CONNECTIONS PROVIDED WHERE MAIN LINE EXCEEDS 10' IN DEPTH SHALL REQUIRE RISERS AND CONFORM TO COA STANDARD DETAIL DRAWING 2136.

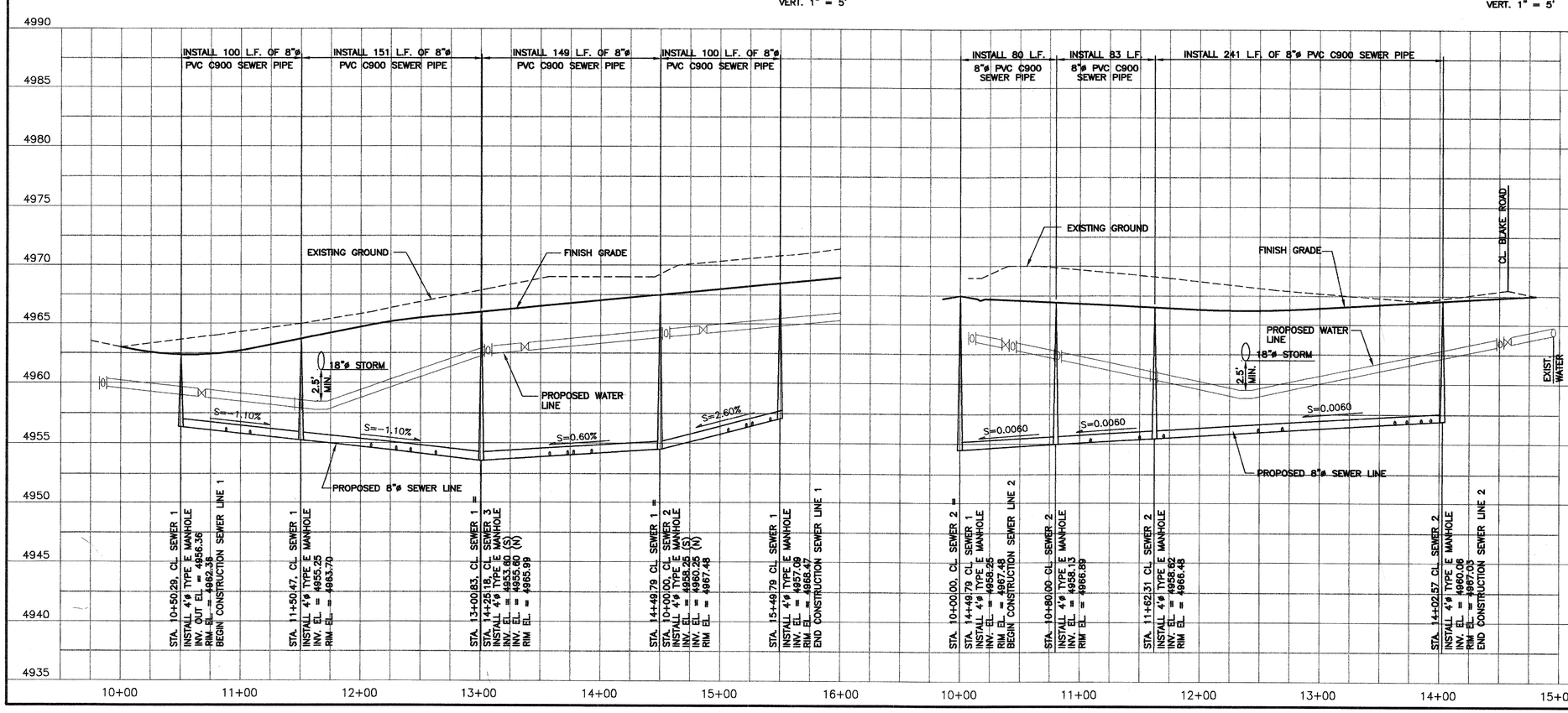

AS BUILT INFORMATION

No.	Date	REMARKS	Contractor	Work Staked By	Inspected By	Acceptance By	Field Verification By	Drawings Corrected By

MICRO-FILM INFORMATION

Recorded By: Date

No.

BENCH MARKS

ELEVATIONS ARE BASED ON CITY OF ALBUQUERQUE STATION NO. "NM45-7A" HAVING AN ELEVATION OF 4953.487.

SURVEY INFORMATION

FIELD NOTES

No.

ENGINEERS SEAL

EDWARD J. LOS KAMP
NEW MEXICO
12-6-07
REGISTERED PROFESSIONAL ENGINEER

REVISIONS	No.	Date

Designed By E.J.L. Date
Drawn By T.D.S. Date
Checked By E.J.L. Date

JEL & ASSOCIATES, LLC
P.O. BOX 3180/250 BAZAN LP.
CORRALES, N.M. 87048
505 823-1556
505-823-2192 FAX
jelassoc@comcast.net
ENGINEERING CONSULTING

CITY OF ALBUQUERQUE
PUBLIC WORKS DEPARTMENT
ENGINEERING GROUP

TITLE:

SUNSHINE WEST SUBDIVISION 1
SEWER LINE PLAN AND PROFILE

12-6-07

Last Design Update — Mo./Day/Yr. — Mo./Day/Yr.

City Project No. 7785.82 | Zone Map NO. N-10 | Sheet 4 Of 16

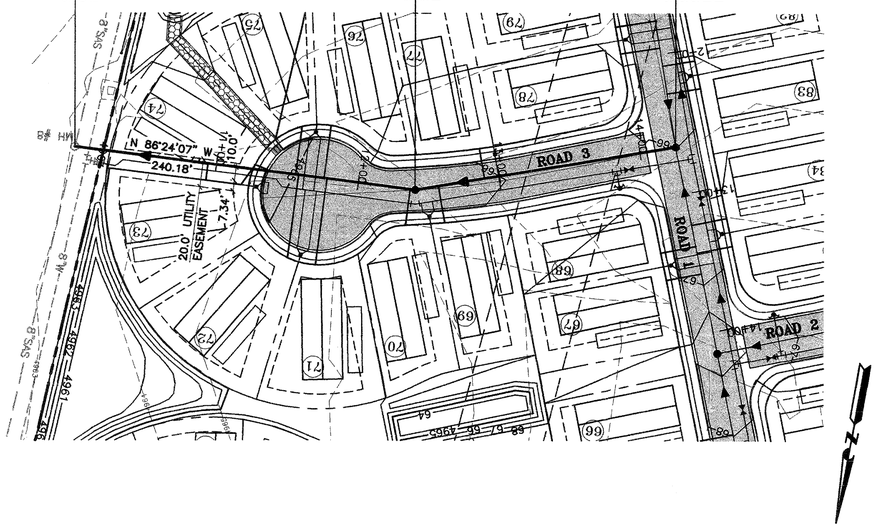

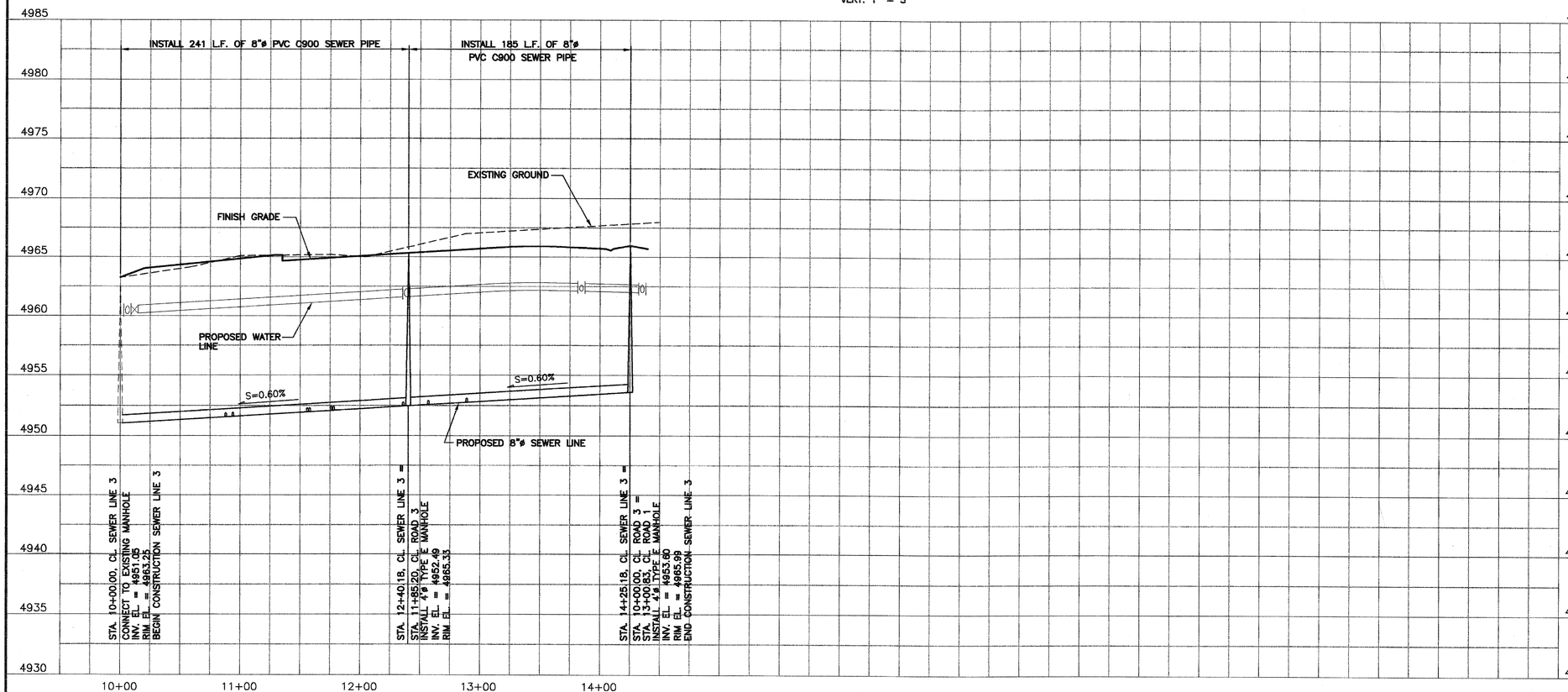

SEWER SERVICE LINE TABLE			
SEWER LINE 3			
STA./OFFSET	LOT	INV/MAIN	INV/ROW
10+88/0'	74	4952.29	4952.34
10+94/0'	73	4952.37	4952.62
11+56/0'	75	4953.19	4953.87
11+58/0'	72	4953.22	4954.40
11+76/0'	76	4953.45	4954.20
11+78/0'	71	4953.48	4954.73
12+36/0'	70	4954.25	4954.77
12+57/0'	69	4954.53	4955.07
12+89/0'	77	4954.95	4955.38

GENERAL NOTES:

1. ALL SEWER SERVICE CONNECTIONS PROVIDED WHERE MAIN LINE EXCEEDS 10' IN DEPTH SHALL REQUIRE RISERS AND CONFORM TO COA STANDARD DETAIL DRAWING 2136.

AS BUILT INFORMATION
Contractor
Work Staked By
Staking Checked By
Acceptance By
Field Verification By
Drawings Corrected By

MICRO-FILM INFORMATION
Recorded By Date
No.

BENCH MARKS
ELEVATIONS ARE BASED ON CITY OF ALBUQUERQUE STATION NO. "NM45-7A" HAVING AN ELEVATION OF 4953.487.

SURVEY INFORMATION
FIELD NOTES
No.

ENGINEERS SEAL
EDWARD J. LOSTETTER
NEW MEXICO
11370
REGISTERED PROFESSIONAL ENGINEER
12-6-07

No.	Date	REMARKS
		REVISIONS

DESIGN
Designed By E.J.L. Date
Drawn By T.D.S. Date
Checked By E.J.L. Date

JEL & ASSOCIATES, LLC
P.O. BOX 3180/250 BAZAN LP.
CORRALES, N.M. 87048
505 823-1556
505-823-2192 FAX
jelassoc@comcast.net
ENGINEERING O CONSULTING

CITY OF ALBUQUERQUE
PUBLIC WORKS DEPARTMENT
ENGINEERING GROUP

TITLE:
SUNSHINE WEST SUBDIVISION 1
SEWER LINE PLAN AND PROFILE

12-6-07

Last Design Update | Mo./Day/Yr. | Mo./Day/Yr.

City Project No. 7785.82 | Zone Map NO. N-10 | Sheet 5 Of 16

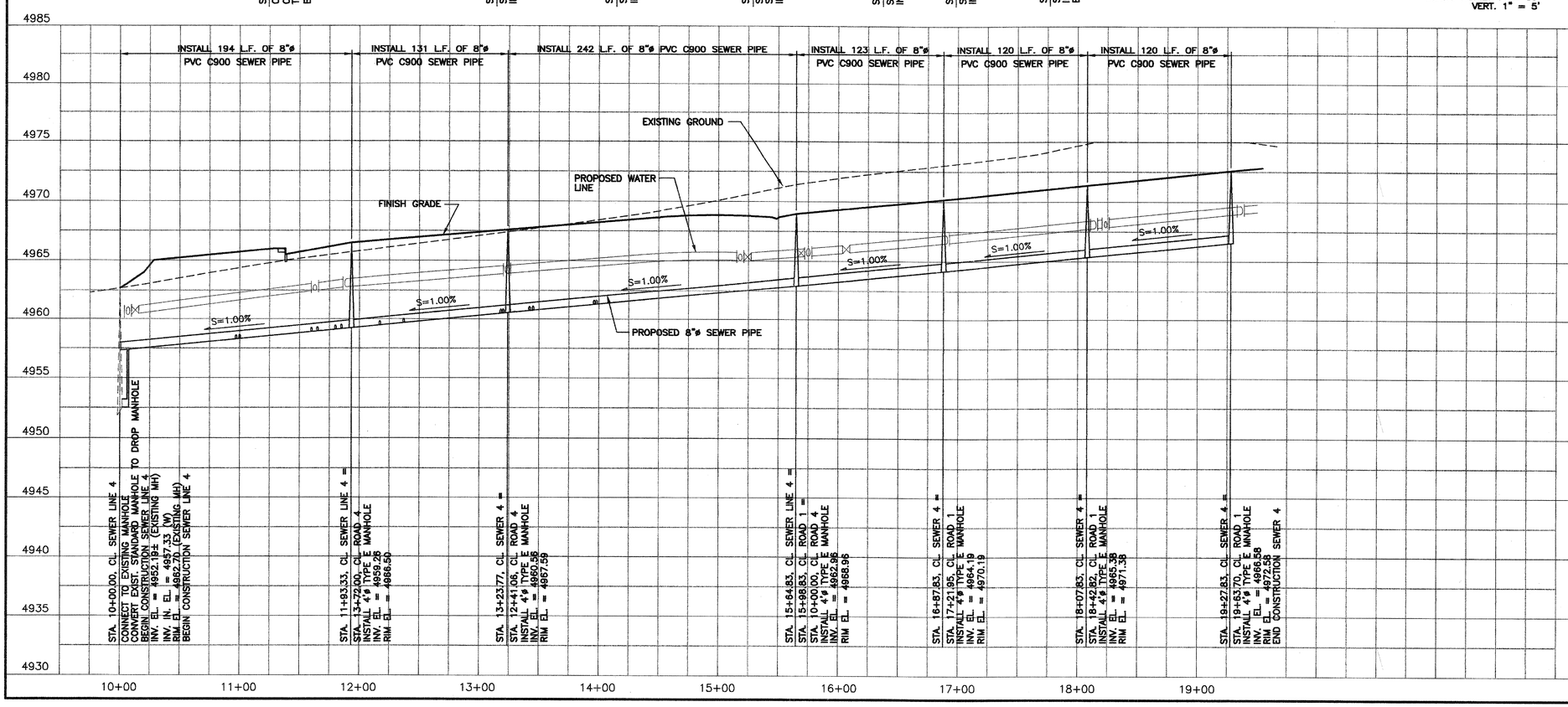

SEWER SERVICE LINE TABLE			
SEWER LINE 4			
STA./OFFSET	LOT	INV/MAIN	INV/ROW
10+97/0'	58	4958.30	4958.44
11+00/0'	59	4958.33	4958.49
11+60/0'	57	4958.93	4960.00
11+65/0'	60	4958.98	4959.81
11+80/0'	56	4959.13	4960.27
11+85/0'	61	4959.21	4960.06
12+17/0'	55	4959.50	4960.11
12+37/0'	54	4959.70	4960.27
13+18/0'	62	4960.50	4960.98
13+20/0'	53	4960.52	4961.03
13+42/0'	52	4960.74	4961.24
13+45/0'	63	4960.77	4961.27
13+96/0'	51	4961.28	4961.78
13+98/0'	64	4961.30	4961.80

GENERAL NOTES:

1. ALL SEWER SERVICE CONNECTIONS PROVIDED WHERE MAIN LINE EXCEEDS 10' IN DEPTH SHALL REQUIRE RISERS AND CONFORM TO COA STANDARD DETAIL DRAWING 2136.

AS BUILT INFORMATION
Contractor
Work Staked By
Inspector's Acceptance By
Field Verification By
Drawings Corrected By
MICRO-FILM INFORMATION
Recorded By
Date
No.

BENCH MARKS
ELEVATIONS ARE BASED ON CITY OF ALBUQUERQUE STATION NO. "NM45-7A" HAVING AN ELEVATION OF 4953.487.

SURVEY INFORMATION
FIELD NOTES
No.

ENGINEERS SEAL
EDWARD J. HOSTNER
NEW MEXICO
9375
REGISTERED PROFESSIONAL ENGINEER
12/26/07

No.	Date	REMARKS	Date
		REVISIONS	
		DESIGN	

Designed By E.J.L. Date
Drawn By T.D.S. Date
Checked By E.J.L. Date

JEL & ASSOCIATES, LLC
P.O. BOX 3180/250 BAZAN LP.
CORRALES, N.M. 87048
505 823-1556
505-823-2192 FAX
jelassoc@comcast.net
ENGINEERING CONSULTING

CITY OF ALBUQUERQUE
PUBLIC WORKS DEPARTMENT
ENGINEERING GROUP

TITLE:
SUNSHINE WEST SUBDIVISION 1
SEWER LINE PLAN AND PROFILE

12-6-07

Last Design Update | Mo./Day/Yr. | Mo./Day/Yr.

City Project No. 7785.82 | Zone Map NO. N-10 | Sheet 6 Of 16

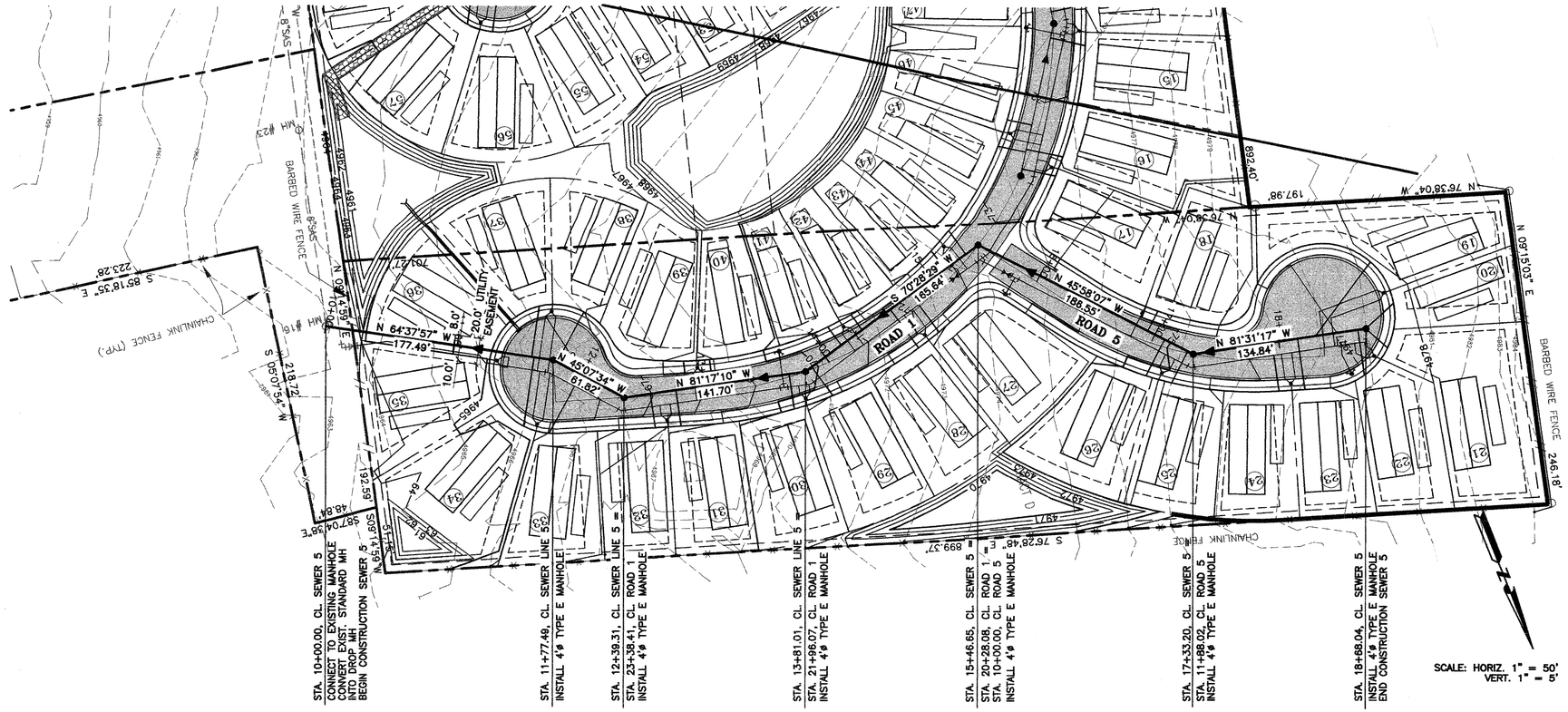

STA. 10+00.00, CL. SEWER 5
CONNECT TO EXISTING MANHOLE
CONNECT EXIST. STANDARD MH
INTO DROP MH
BEGIN CONSTRUCTION SEWER 5

STA. 11+77.49, CL. SEWER LINE 5
INSTALL 4'ø TYPE E MANHOLE

STA. 12+39.31, CL. SEWER LINE 5 =
STA. 23+38.41, CL. ROAD 1
INSTALL 4'ø TYPE E MANHOLE

STA. 13+81.01, CL. SEWER LINE 5
STA. 21+96.07, CL. ROAD 1
INSTALL 4'ø TYPE E MANHOLE

STA. 15+46.65, CL. SEWER 5 =
STA. 20+28.08, CL. ROAD 1 =
STA. 10+00.00, CL. ROAD 5
INSTALL 4'ø TYPE E MANHOLE

STA. 17+33.20, CL. SEWER 5
STA. 11+88.02, CL. ROAD 5
INSTALL 4'ø TYPE E MANHOLE

STA. 18+68.04, CL. SEWER 5
INSTALL 4'ø TYPE E MANHOLE
END CONSTRUCTION SEWER 5

SEWER SERVICE LINE TABLE			
SEWER LINE 5			
STA./OFFSET	LOT	INV/MAIN	INV/ROW
11+00/0'	35	4958.00	4958.14
11+03/0'	36	4958.02	4958.18
11+61/0'	37	4958.38	4959.17
11+63/0'	34	4958.40	4959.48
11+81/0'	38	4958.59	4959.47
12+01.31	33	4959.12	4960.27
12+60/0'	32	4960.68	4961.22
12+80/0'	31	4961.21	4961.78
12+89/0'	39	4961.45	4961.87
13+09/0'	40	4961.98	4962.37
13+68/0'	30	4963.56	4964.11
13+87/0'	29	4963.98	4964.53
14+15/0'	41	4964.39	4964.74
14+35/0'	42	4964.68	4964.97
14+62/0'	28	4965.07	4965.81
14+82/0'	27	4965.36	4966.09
15+15/0'	43	4965.84	4966.20
15+35/0'	44	4966.13	4966.58
16+90/0'	18	4968.37	4968.94
16+94/0'	26	4968.43	4968.77
17+08/0'	25	4968.63	4969.26
17+95/0'	24	4969.89	4970.65
18+15/0'	23	4970.18	4970.98
18+28/0'	19	4970.37	4972.05
18+68.04/0'	20	4970.94	4971.69
18+52/0'	22	4970.71	4971.53
18+68.04/0'	21	4970.94	4971.42

GENERAL NOTES:

1. ALL SEWER SERVICE CONNECTIONS PROVIDED WHERE MAIN LINE EXCEEDS 10' IN DEPTH SHALL REQUIRE RISERS AND CONFORM TO COA STANDARD DETAIL DRAWING 2136.

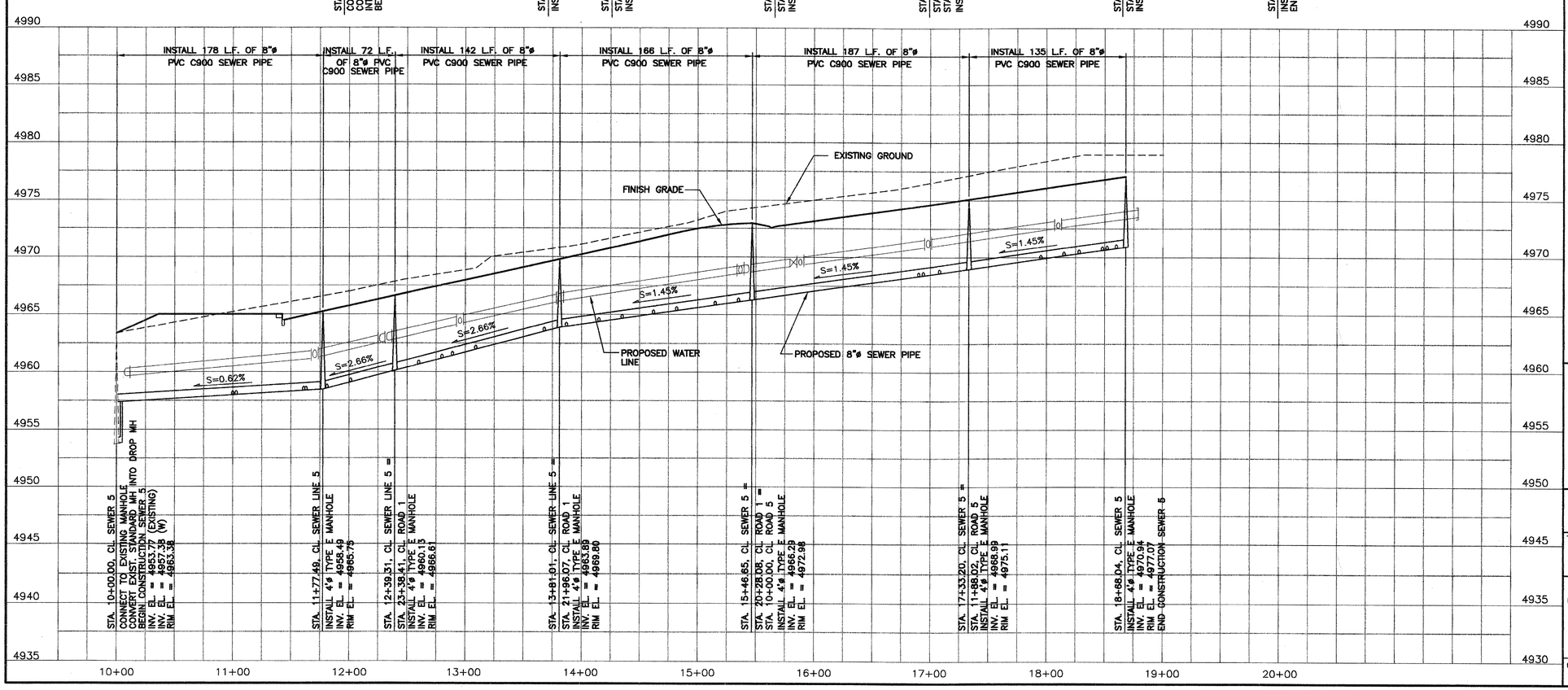

STA. 10+00.00, CL. SEWER 5
CONNECT TO EXISTING MANHOLE
CONNECT EXIST. STANDARD MH INTO DROP MH
BEGIN CONSTRUCTION SEWER 5
INV. EL. = 4953.77 (EXISTING)
INV. EL. = 4957.38 (W)
RIM EL. = 4963.38

STA. 11+77.49, CL. SEWER LINE 5
INSTALL 4'ø TYPE E MANHOLE
INV. EL. = 4958.49
RIM EL. = 4965.75

STA. 12+39.31, CL. SEWER LINE 5 =
STA. 23+38.41, CL. ROAD 1
INSTALL 4'ø TYPE E MANHOLE
INV. EL. = 4960.13
RIM EL. = 4966.61

STA. 13+81.01, CL. SEWER LINE 5 =
STA. 21+96.07, CL. ROAD 1
INSTALL 4'ø TYPE E MANHOLE
INV. EL. = 4963.89
RIM EL. = 4969.80

STA. 15+46.65, CL. SEWER 5
STA. 20+28.08, CL. ROAD 1 =
STA. 10+00.00, CL. ROAD 5
INSTALL 4'ø TYPE E MANHOLE
INV. EL. = 4966.29
RIM EL. = 4972.98

STA. 17+33.20, CL. SEWER 5 =
STA. 11+88.02, CL. ROAD 5
INSTALL 4'ø TYPE E MANHOLE
INV. EL. = 4968.99
RIM EL. = 4975.11

STA. 18+68.04, CL. SEWER 5
INSTALL 4'ø TYPE E MANHOLE
INV. EL. = 4970.94
RIM EL. = 4977.07
END CONSTRUCTION SEWER 5

AS BUILT INFORMATION
Contractor
Work Staked By
Inspector's Acceptance By
Field Verification By
Drawings Corrected By
MICRO-FILM INFORMATION
Recorded By
Date
No.

BENCH MARKS
ELEVATIONS ARE BASED ON CITY OF ALBUQUERQUE STATION NO. "NM45-7A" HAVING AN ELEVATION OF 4953.487.

SURVEY INFORMATION
FIELD NOTES
No.

ENGINEERS SEAL
EDWARD V. VOSLAKY
NEW MEXICO
14376
12-6-07
REGISTERED PROFESSIONAL ENGINEER

JEL & ASSOCIATES, LLC
P.O. BOX 3180/250 BAZAN LP.
CORRALES, N.M. 87048
505 823-1556
505-823-2192 FAX
jelassoc@comcast.net
ENGINEERING CONSULTING

No.	Date	REMARKS
		REVISIONS
		DESIGN

Designed By E.J.L. Date
Drawn By T.D.S. Date
Checked By E.J.L. Date

CITY OF ALBUQUERQUE
PUBLIC WORKS DEPARTMENT
ENGINEERING GROUP

TITLE:
SUNSHINE WEST SUBDIVISION 1
SEWER LINE PLAN AND PROFILE

12-6-07

Last Design Update | Mo./Day/Yr. | Mo./Day/Yr.

City Project No. 7785.82 | Zone Map NO. N-10 | Sheet 7 Of 16

GENERAL NOTES:

1. ON ALL WATER SERVICE LINES PROVIDE DUAL CHECK VALVES IN THE METER BOXES.
2. ALL WATER SERVICE LINES TO BE 3/4".

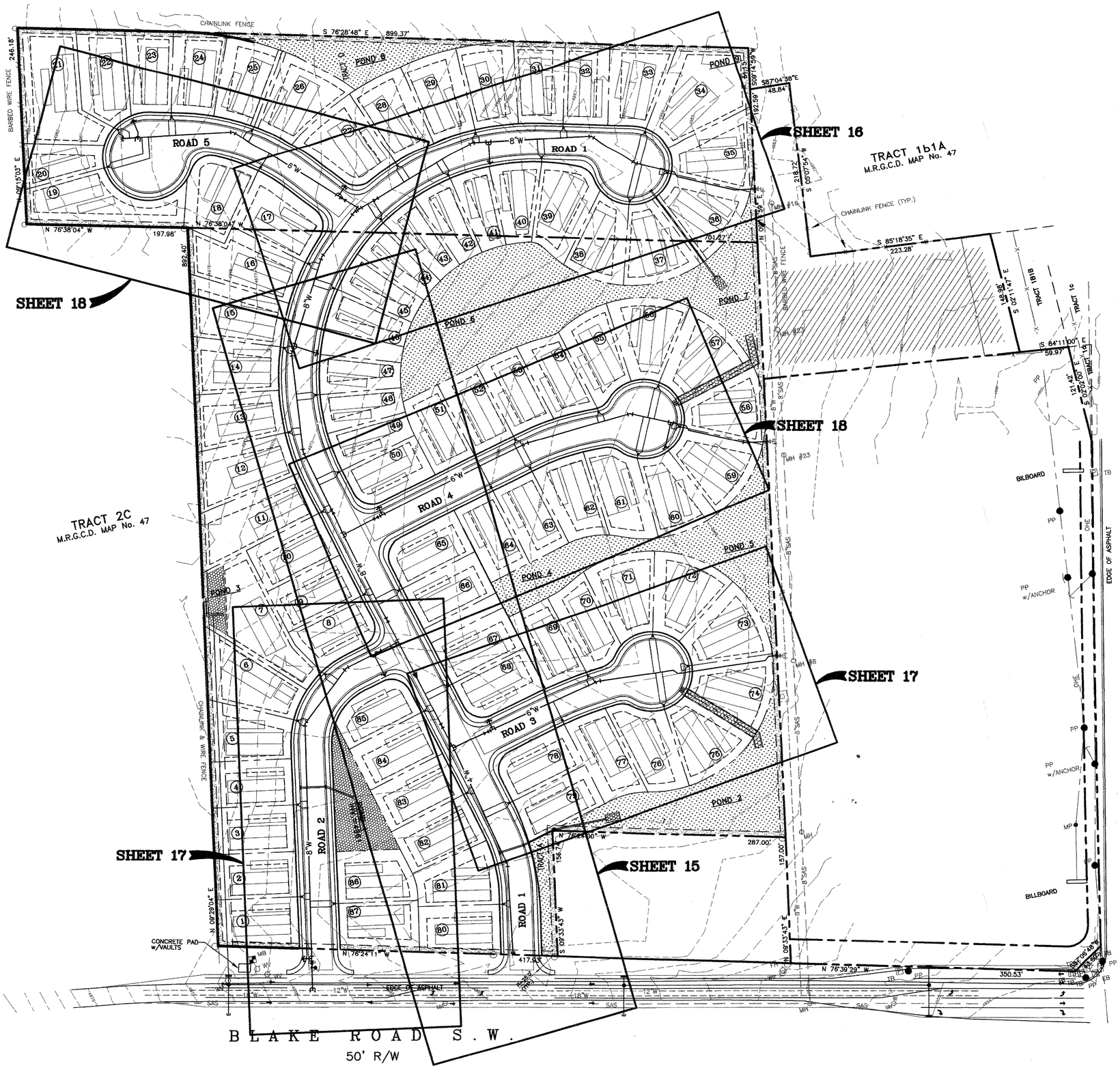

AS BUILT INFORMATION

Contractor	
Work Staked By	
Staking Checked By	
Acceptance By	
Field Verification By	
Drawings Corrected By	

MICRO-FILM INFORMATION

Recorded By	
Date	
No.	

BENCH MARKS

ELEVATIONS ARE BASED ON CITY OF ALBUQUERQUE STATION NO. "NM45-7A" HAVING AN ELEVATION OF 4953.487.

SURVEY INFORMATION

FIELD NOTES

No.

ENGINEERS SEAL

EDWARD J. LOSI NEW MEXICO 12126 REGISTERED PROFESSIONAL ENGINEER

No.	Date	REMARKS	Date
		REVISIONS	
		DESIGN	

Designed By E.J.L. Date
Drawn By T.D.S. Date
Checked By E.J.L. Date

JEL & ASSOCIATES, LLC
P.O. BOX 3180/250 BAZAN LP.
CORRALES, N.M. 87048
505 823-1556
505-823-2192 FAX
jelassoc@comcast.net
ENGINEERING O CONSULTING

CITY OF ALBUQUERQUE
PUBLIC WORKS DEPARTMENT
ENGINEERING GROUP

TITLE:

SUNSHINE WEST SUBDIVISION 1 OVERALL WATER LAYOUT PLAN

12-6-07

Last Design Update — Mo./Day/Yr. — Mo./Day/Yr.

City Project No.	Zone Map NO.	Sheet	Of
7785.82	N-10	8	16

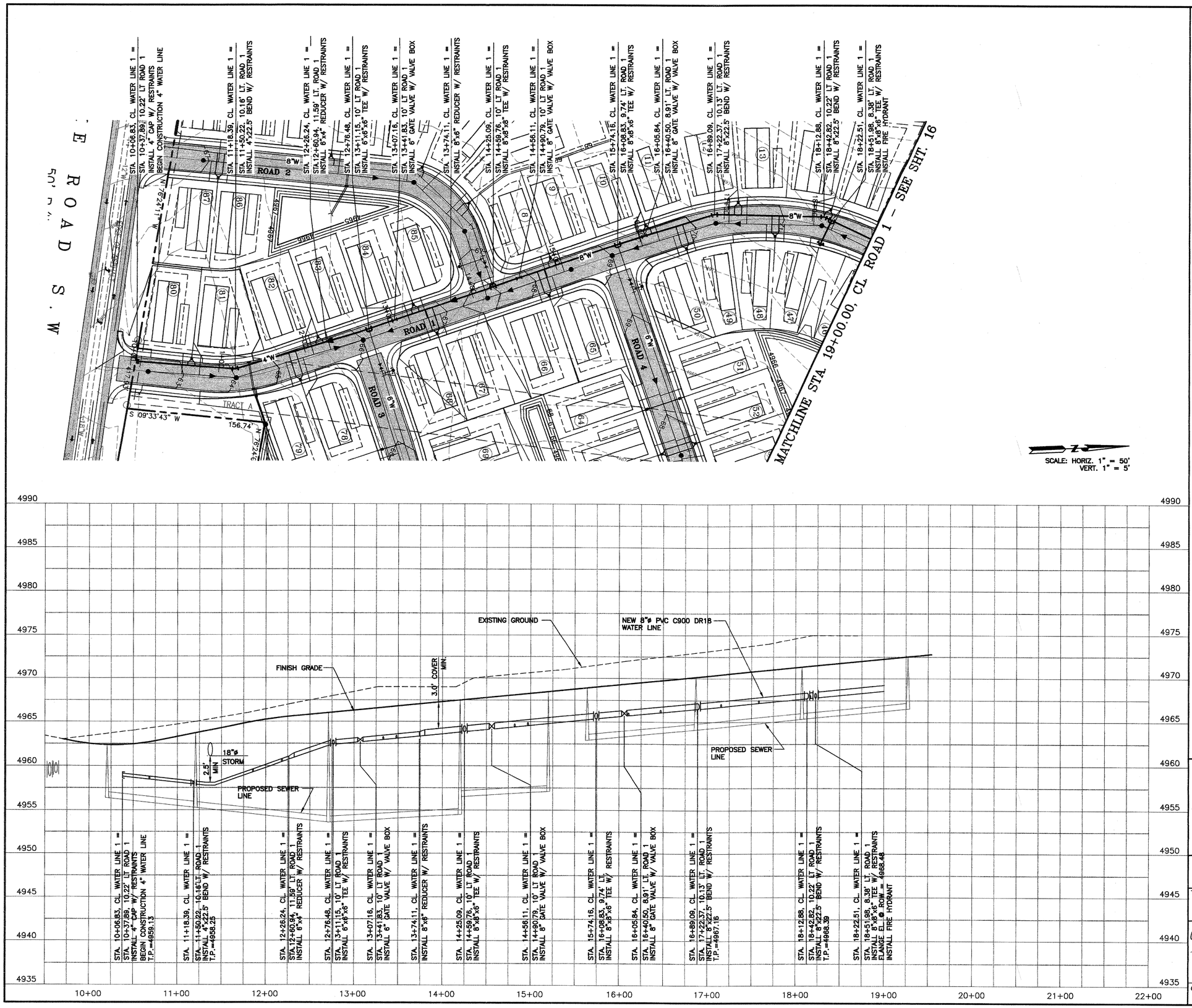

WATER SERVICE LINE TABLE		
ROADWAY 1		
STA./OFFSET	LOT	INV/ROW
10+68.46/0'	80,81	4961.04
11+85.61/0'	78,79	4963.36
12+18.56/0'	82,83	4963.84
13+33.11/0'	84,85	4964.99
13+48.16/0'	67,68	4965.14
14+82.16/0'	65,66	4966.48
14+97.11/0'	8,9	4966.62
16+10.70/0'	10,11	4967.76
16+47.05/0'	49,50	4968.12
17+15.61/0'	12,13	4968.80
17+58.30/0'	47,48	4969.22
18+16.62/0'	14,15	4969.81

GENERAL NOTE:

1. FOR RESTRAINED JOINT LENGTHS, SEE DETAIL ON SHEET C21.
2. ALL METER BOXES TO HAVE DUAL CHECK VALVES ON METER SETTER.

AS BUILT INFORMATION
Contractor
Work Staked By
Construction Acceptance By
Field Verification By
Drawings Corrected By
MICRO-FILM INFORMATION
Recorded By Date
No.

BENCH MARKS
ELEVATIONS ARE BASED ON CITY OF ALBUQUERQUE STATION NO. "NM45-7A" HAVING AN ELEVATION OF 4953.487.

SURVEY INFORMATION
FIELD NOTES
No.

ENGINEERS SEAL
EDWARD J. LOISTASH NEW MEXICO 11176 REGISTERED PROFESSIONAL ENGINEER 12-26-07

No.	Date	REMARKS	Date
		REVISIONS	
		DESIGN	

Designed By E.J.L. Date
Drawn By T.D.S. Date
Checked By E.J.L. Date

JEL & ASSOCIATES, LLC
P.O. BOX 3180/250 BAZAN LP.
CORRALES, N.M. 87048
505 823-1556
505-823-2192 FAX
jelassoc@comcast.net
ENGINEERING CONSULTING

CITY OF ALBUQUERQUE
PUBLIC WORKS DEPARTMENT
ENGINEERING GROUP

TITLE:
SUNSHINE WEST SUBDIVISION 1
WATER LINE PLAN AND PROFILE

12-6-07

Last Design Update | Mo./Day/Yr. | Mo./Day/Yr.

City Project No. 7785.82 | Zone Map NO. N-10 | Sheet 9 Of 16

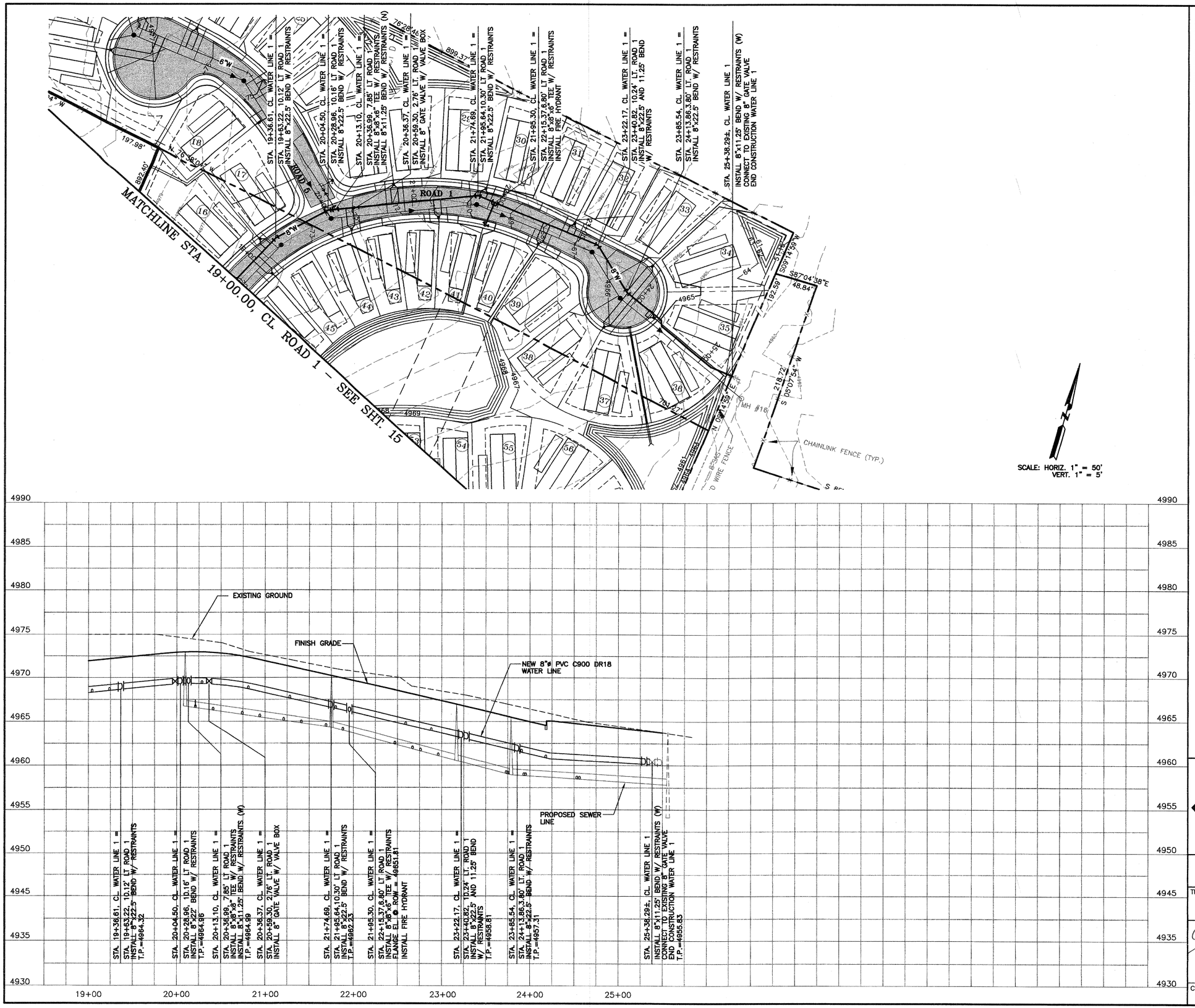

WATER SERVICE LINE TABLE		
ROADWAY 1		
STA./OFFSET	LOT	INV/ROW
19+04.14/0'	45,46	4965.38
19+23.93/0'	16,17	4965.58
20+28.45/0'	43,44	4966.36
20+80.98/0'	28,27	4965.74
21+27.92/0'	41,42	4964.68
21+79.93/0'	29,30	4963.49
22+59.30/0'	39,40	4961.68
22+88.17/0'	31,32	4961.00
23+88.17/0'	33,34	4963.80
23+90.62/0'	37,38	4964.28
24+17.97/0'	35,36	4963.65

GENERAL NOTE:

1. FOR RESTRAINED JOINT LENGTHS, SEE DETAIL ON SHEET C21.
2. ALL METER BOXES TO HAVE DUAL CHECK VALVES ON METER SETTER.

AS BUILT INFORMATION

Contractor
Work Staked By
Staking Checked By
Acceptance By
Field Verification By
Drawings Corrected By

MICRO-FILM INFORMATION

Recorded By
Date
No.

BENCH MARKS

ELEVATIONS ARE BASED ON CITY OF ALBUQUERQUE STATION NO. "NM45-7A" HAVING AN ELEVATION OF 4953.487.

SURVEY INFORMATION

FIELD NOTES

No.

ENGINEERS SEAL

EDWARD J. LOSTAL
NEW MEXICO
11876
12/26/07
REGISTERED PROFESSIONAL ENGINEER

No.	Date	REMARKS	Date
		REVISIONS	
		DESIGN	

Designed By E.J.L. Date
Drawn By T.D.S. Date
Checked By E.J.L. Date

JEL & ASSOCIATES, LLC
P.O. BOX 3180/250 BAZAN LP.
CORRALES, N.M. 87048
505 823-1556
505-823-2192 FAX
jelassoc@comcast.net
ENGINEERING CONSULTING

CITY OF ALBUQUERQUE
PUBLIC WORKS DEPARTMENT
ENGINEERING GROUP

TITLE:

SUNSHINE WEST SUBDIVISION 1 WATER LINE PLAN AND PROFILE

12-6-07

Last Design Update

Mo./Day/Yr.	Mo./Day/Yr.

City Project No. 7785.82

Zone Map NO. N-10

Sheet 10 Of 16

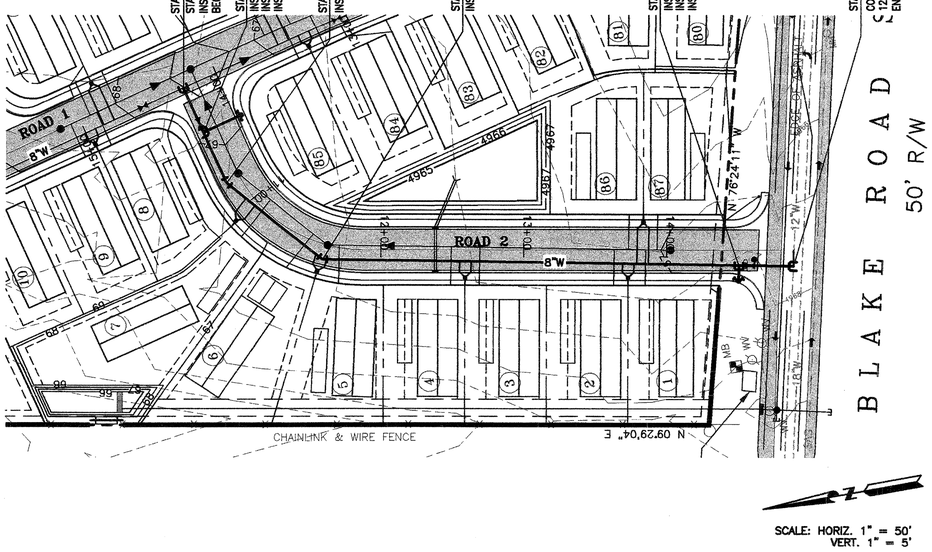

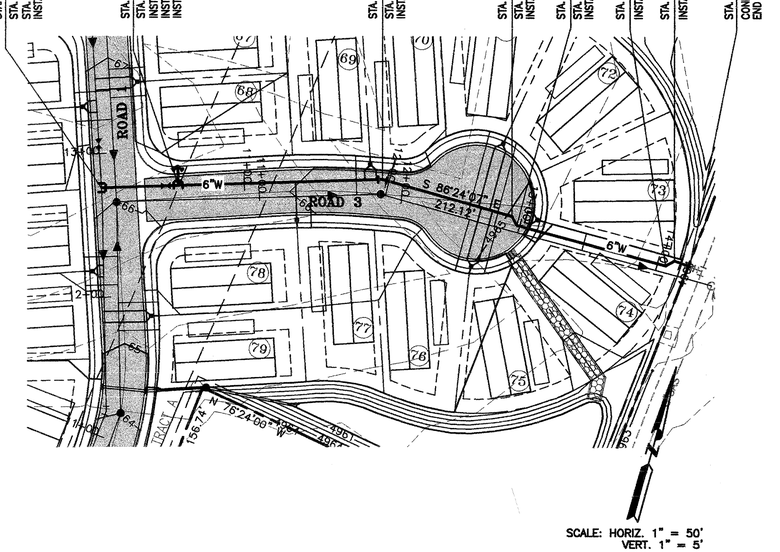

WATER SERVICE LINE TABLE		
ROAD 2		
STA./OFFSET	LOT	INV/ROW
11+00.67/3.82' RT.	7	4965.17
11+60.29/9.97' RT.	5,6	4964.87
12+59.10/8.01' RT.	3,4	4964.61
13+73.08/9.59' RT.	1,2	4965.24
13+83.17/9.73' RT.	86,87	4965.30
ROAD 3		
STA./OFFSET	LOT	INV/ROW
11+36.04/0'	77	4964.09
11+88.60/0'	69,70	4963.75
12+70.62/0'	71,72	4963.45
12+72.62/0'	75,76	4963.30
13+00.62/0'	73,74	4962.90

GENERAL NOTE:

1. FOR RESTRAINED JOINT LENGTHS, SEE DETAIL ON SHEET C21.
2. ALL METER BOXES TO HAVE DUAL CHECK VALVES ON METER SETTER.

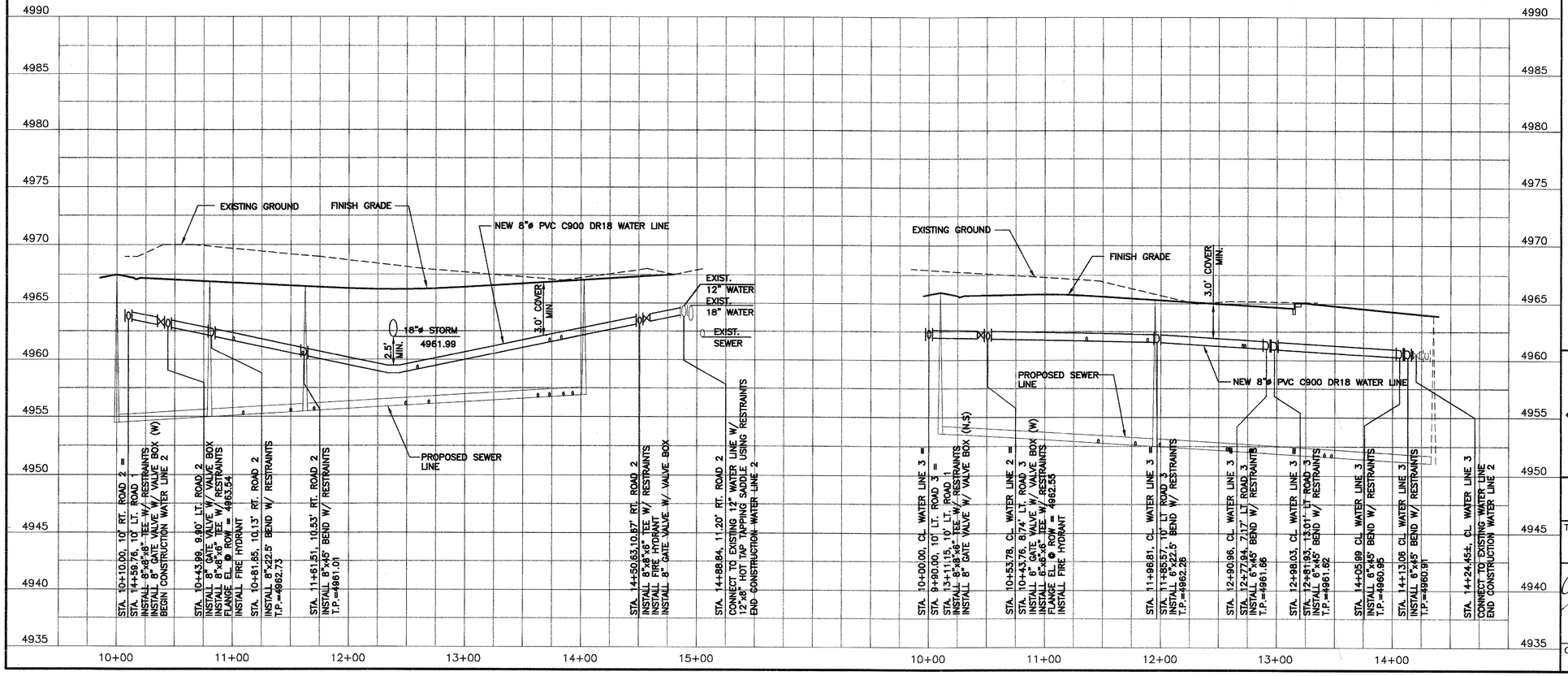

AS BUILT INFORMATION

Contractor	
Work Staked By	
Inspected By	
Acceptance By	
Field Verification By	
Drawings Corrected By	
MICRO-FILM INFORMATION	
Recorded By	Date
No.	

BENCH MARKS

ELEVATIONS ARE BASED ON CITY OF ALBUQUERQUE STATION NO. "NM45-7A" HAVING AN ELEVATION OF 4953.487.

SURVEY INFORMATION

FIELD NOTES

No.	

ENGINEERS SEAL

EDWARD J. LOZINSKI NEW MEXICO 11376 REGISTERED PROFESSIONAL ENGINEER 12/6/07

No.	Date	REMARKS	Date
		REVISIONS	
		DESIGN	

Designed By E.J.L. Date
Drawn By T.D.S. Date
Checked By E.J.L. Date

JEL & ASSOCIATES, LLC
P.O. BOX 3180/250 BAZAN LP.
CORRALES, N.M. 87048
505 823-1556
505-823-2192 FAX
jelassoc@comcast.net
ENGINEERING CONSULTING

CITY OF ALBUQUERQUE
PUBLIC WORKS DEPARTMENT
ENGINEERING GROUP

TITLE:

SUNSHINE WEST SUBDIVISION 1
WATER LINE PLAN AND PROFILE

12-6-07

Last Design Update

Mo./Day/Yr.	Mo./Day/Yr.

City Project No.	Zone Map NO.	Sheet	Of
7785.82	N-10	11	16

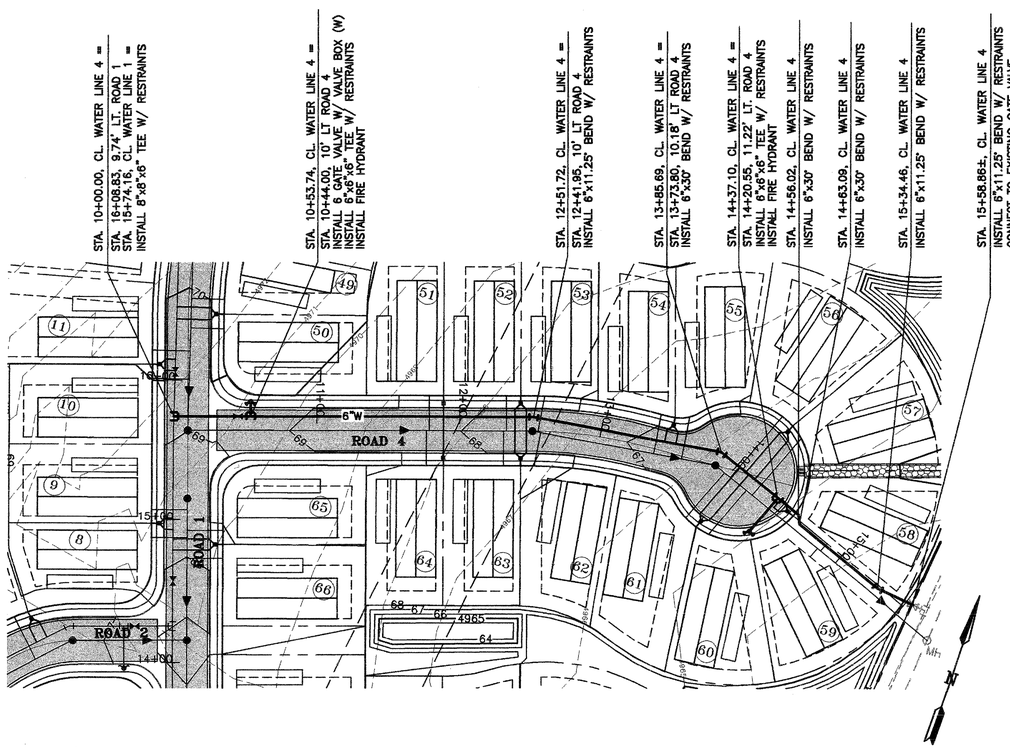

SCALE: HORIZ. 1" = 50'
VERT. 1" = 5'

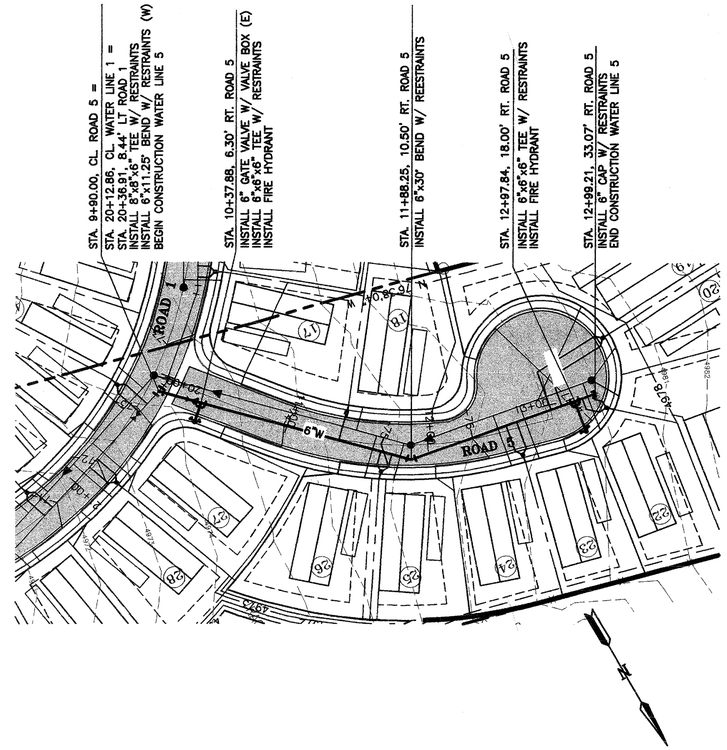

SCALE: HORIZ. 1" = 50'
VERT. 1" = 5'

WATER SERVICE LINE TABLE		
ROAD 4		
STA./OFFSET	LOT	INV/ROW
11+79.00/10'LT.	51,64	4966.57
12+33.00/10' LT.	52,53,62,63	4966.12
13+37.32/7.26' LT.	54,55	4965.04
13+92.74/1.51' LT.	60,61	4965.00
13+97.65/0.74' RT.	56,57	4964.80
14+22.59/12.15' RT.	58,59	4964.72
ROAD 5		
STA./OFFSET	LOT	INV/ROW
11+37.56/0.67' RT.	18	4964.11
11+71.26/5.94' RT.	25,26	4964.60
12+60.72/3.80' LT.	23,24	4965.90
12+96.64/4.44' RT.	19,20	4976.19
12+98.69/27.64' RT.	21,22	4975.48

GENERAL NOTE:

1. FOR RESTRAINED JOINT LENGTHS, SEE DETAIL ON SHEET C21.

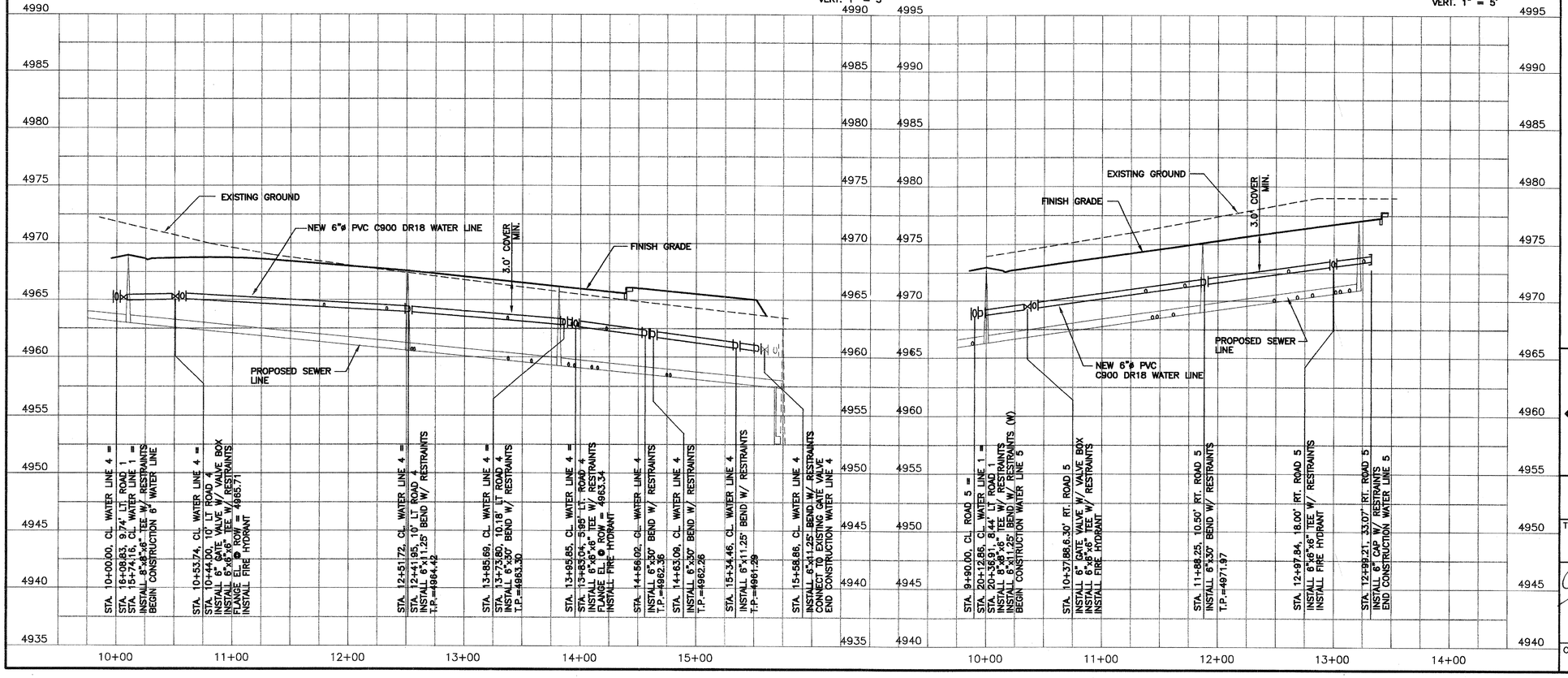

AS BUILT INFORMATION

Contractor
Work Staked By
Inspected By
Acceptance By
Field Verification By
Drawings Corrected By

MICRO-FILM INFORMATION

Recorded By Date
No.

BENCH MARKS

ELEVATIONS ARE BASED ON CITY OF ALBUQUERQUE STATION NO. "NM45-7A" HAVING AN ELEVATION OF 4953.487.

SURVEY INFORMATION

FIELD NOTES

No.	

ENGINEERS SEAL

EDWARD J. LOSTAKA
NEW MEXICO
13276
12/26/07
REGISTERED PROFESSIONAL ENGINEER

No.	Date	REMARKS	Date
		REVISIONS	
		DESIGN	

Designed By E.J.L. Date
Drawn By T.D.S. Date
Checked By E.J.L. Date

JEL & ASSOCIATES, LLC
P.O. BOX 3180/250 BAZAN LP.
CORRALES, N.M. 87048
505 823-1558
505-823-2192 FAX
jelassoc@comcast.net
ENGINEERING • CONSULTING

CITY OF ALBUQUERQUE
PUBLIC WORKS DEPARTMENT
ENGINEERING GROUP

TITLE:

SUNSHINE WEST SUBDIVISION 1
WATER LINE PLAN AND PROFILE

12-6-07

Last Design Update

Mo./Day/Yr.	Mo./Day/Yr.

City Project No.	Zone Map NO.	Sheet	Of
7785.82	N-10	12	16

GENERAL NOTES

1. MECHANICAL TAMPERS NOT TO BE USED IN THE INITIAL BACKFILL SECTION FOR FLEXIBLE PIPE.
2. MINIMUM CLASS "C" BEDDING WILL BE USED.

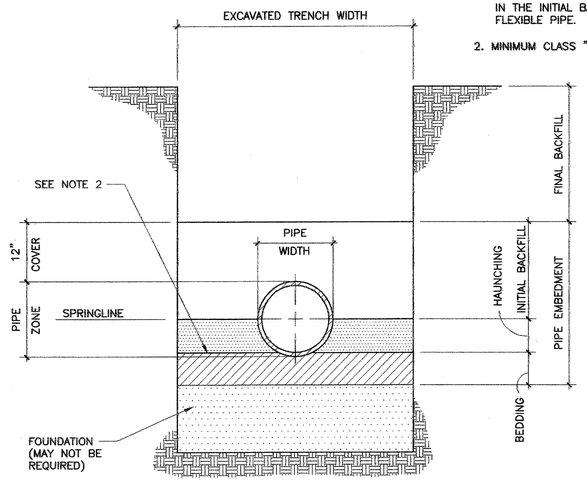

1/21 TRENCH CROSS SECTION SHOWING TERMINOLOGY

SCALE: N.T.S. C.O.A. STD. DWG. 2315

FITTING	PIPE MATERIAL	SOIL TYPE	SAFETY FACTOR	TRENCH TYPE	DEPTH OF BURY	TEST PRESSURE	NOMINAL SIZE	BEND ANGLE	BRANCH SIZE	LENGTH ALONG RUN	SMALL SIZE	LOWSIDE DEPTH	RESTRAINT LENGTH	RESTRAINT LENGTH 2
HORIZ. BEND	PVC	SC	1.5 TO 1	5	3	100	8	45°	–	–	–	–	6 FT.	–
HORIZ. BEND	PVC	SC	1.5 TO 1	5	3	150	8	90°	–	–	–	–	20 FT.	–
HORIZ. BEND	PVC	SC	1.5 TO 1	5	3	150	8	22.5°	–	–	–	–	4 FT.	–
HORIZ. BEND	PVC	SC	1.5 TO 1	5	3	150	8	11.25°	–	–	–	–	2 FT.	–
VERT. OFFSET	PVC	SC	1.5 TO 1	5	3	150	6	11.25°	–	–	–	7 FT.	6 FT.	1 FT.
VERT. OFFSET	PVC	SC	1.5 TO 1	5	3	150	6	22.5°	–	–	–	9 FT.	13 FT.	2 FT.
VERT. OFFSET	PVC	SC	1.5 TO 1	5	3	150	8	11.25°	–	–	–	7 FT.	8 FT.	2 FT.
VERT. OFFSET	PVC	SC	1.5 TO 1	5	3	150	8	22.5°	–	–	–	9 FT.	16 FT.	2 FT.
VERT. OFFSET	PVC	SC	1.5 TO 1	5	3	150	8	45°	–	–	–	–	8 FT.	–
TEE	PVC	SC	1.5 TO 1	5	3	150	8	–	6	10	–	–	1 FT.	–
TEE	PVC	SC	1.5 TO 1	5	3	150	8	–	8	10	–	–	1 FT.	–
REDUCER	PVC	SC	1.5 TO 1	5	3	150	8	–	–	–	6	–	26 FT.	–
REDUCER	PVC	SC	1.5 TO 1	5	3	150	6	–	–	–	4	–	25 FT.	–
DEAD END	PVC	SC	1.5 TO 1	5	3	100	8	–	–	–	6	–	42 FT.	–
HORIZ. BEND	PVC	SC	1.5 TO 1	5	3	150	6	90°	–	–	–	–	15 FT.	–
HORIZ. BEND	PVC	SC	1.5 TO 1	5	3	150	6	45°	–	–	–	–	7 FT.	–
HORIZ. BEND	PVC	SC	1.5 TO 1	5	3	150	6	22.5°	–	–	–	–	3 FT.	–
HORIZ. BEND	PVC	SC	1.5 TO 1	5	3	150	6	11.25°	–	–	–	–	2 FT.	–

2/21 THRUST RESTRAINT LENGTH DETAIL

SCALE: N.T.S. C.O.A. STD. DWG. 2320

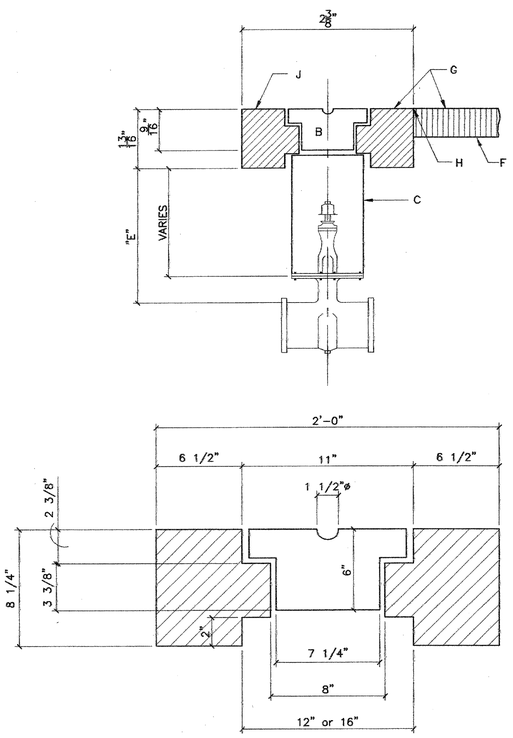

3/21 VALVE BOX TYPE "A"

SCALE: N.T.S. C.O.A. STD. DWG. 2325

KEYED NOTES:

A. 24"X24"X8" RUBBERIZED VALVE BOX CUSHION.

B. VALVE BOX LID

C. 10"ø C900 DR18 PVC VALVE CAN (LENGTH VARIES)

D. NEW OR EXISTING VALVE

E. COMPACTED BACKFILL. SOIL OR BASE COURSE MATERIAL (95% COMPACTION, SEE SECTION 701).

F. NEW OR EXISTING PAVEMENT SECTION.

G. FINISHED PAVEMENT ELEVATION.

H. FILL GAP BETWEEN CUSHION AND PAVEMENT WITH SEALANT.

J. TEXTURED SURFACE.

K. SERVICE HOLE.

L. VALVE RISER OPENING.

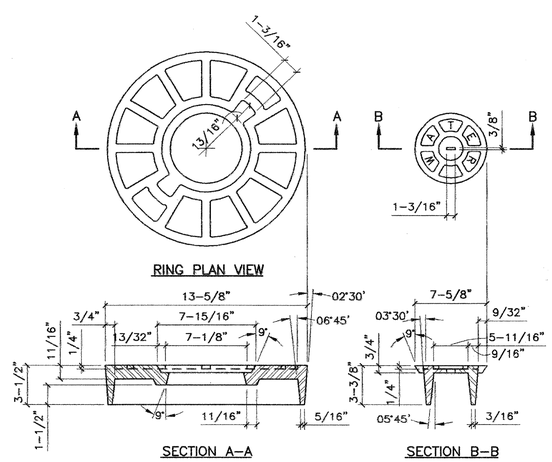

4/21 VALVE BOX AND RING COVER

SCALE: N.T.S. C.O.A. STD. DWG. 2328

AS BUILT INFORMATION
Contractor
Work Staked By
Inspector's Acceptance By
Field Verification By
Drawings Corrected By

MICRO-FILM INFORMATION
Recorded By
Date
No.

BENCH MARKS
ELEVATIONS ARE BASED ON CITY OF ALBUQUERQUE STATION NO. "NM45-7A" HAVING AN ELEVATION OF 4953.487.

SURVEY INFORMATION
FIELD NOTES
No.

ENGINEERS SEAL
EDWARD J. VOSTRESKI NEW MEXICO 11376 REGISTERED PROFESSIONAL ENGINEER

No.	Date	REMARKS	Date
		REVISIONS	
		DESIGN	

Designed By E.J.L. Date
Drawn By T.D.S. Date
Checked By E.J.L. Date

JEL & ASSOCIATES, LLC
P.O. BOX 3180/250 BAZAN LP.
CORRALES, N.M. 87048
505 823-1556
505-823-2192 FAX
jelassoc@comcast.net
ENGINEERING CONSULTING

CITY OF ALBUQUERQUE
PUBLIC WORKS DEPARTMENT
ENGINEERING GROUP

TITLE: SUNSHINE WEST SUBDIVISION 1
TYPICAL WATER DETAILS

3-5-08

Last Design Update Mo./Day/Yr. Mo./Day/Yr.

City Project No. 7785.82 | Zone Map NO. N-10 | Sheet 13 Of 16

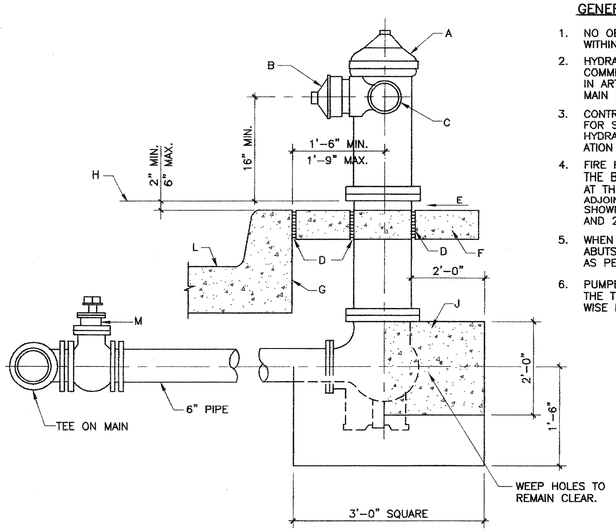

GENERAL NOTES

1. NO OBSTRUCTIONS WILL BE PERMITTED WITHIN 3 FT. OF FIRE HYDRANT.
2. HYDRANT LEG SHALL BE VALVED IN COMMERCIAL AND INDUSTRIAL AREAS, IN ARTERIAL STREETS, AND ON ALL MAIN LINES SIZED 10" OR GREATER.
3. CONTRACTOR SHALL BE RESPONSIBLE FOR SETTING TOP OF FLANGE OF FIRE HYDRANT TO THE CONTROLLED ELEVATION LINE.
4. FIRE HYDRANT SHALL BE LOCATED AT THE BEGINNING OF CURB RETURN OR AT THE PROPERTY LINE COMMON TO ADJOINING LOTS, UNLESS OTHERWISE SHOWN ON PLANS. SEE DWG. 2360 AND 2347.
5. WHEN NEW OR EXISTING SIDEWALK ABUTS CURB, RECONSTRUCT SIDEWALK AS PER DWG. 2430, 2431.
6. PUMPER NOZZLE TO BE SET FACING THE TRAVELED WAY, UNLESS OTHERWISE NOTED ON PLANS.

CONSTRUCTION NOTES :

A. FIRE HYDRANT PER SPEC'S..
B. PUMPER NOZZLE 4 1/2".
C. HOSE NOZZLE 2 1/2".
D. 1/2" EXPANSION JOINT MATERIAL.
E. SLOPE 1/4" PER FOOT.
F. 3'x3'x6" CONC. SQ. PAD, TO BE CONSTRUCTED AROUND FIRE HYDRANT'S CENTER LINE WHEN NOT LOCATED WITHIN SIDEWALK OR CONC. AREA.
G. BACK OF CURB.
H. CONTROLLED ELEV. LINE, LEBEL IN ALL DIRECTIONS.
J. CONC. THRUST BLOCK, APPROX.2'x2'x3' TO BE POURED AGAINST UNDISTURBED EARTH, F.H. WEEP HOLE MUST BE UNOBSTRUCTED.
K. GRAVEL DRAIN POCKET, COVER TOP SURFACE WITH TAR PAPER.
L. STANDARD CURB & GUTTER. FOR OTHER TYPES OF C. & G., OR WHERE NO C. & G. EXIST, THE PLACEMENT OF FIRE HYDRANT REQUIRES SPECIAL DESIGN.
M. IF VALVE IS REQUIRED, VALVE WILL BE CONNECTED TO TEE AT MAIN.

1/22 TYPICAL FIRE HYDRANT INSTALLATION

SCALE: N.T.S. — C.O.A. STD. DWG. 2340

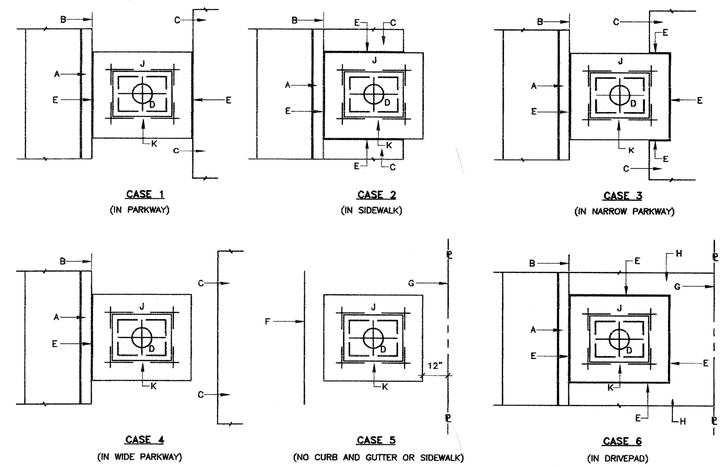

GENERAL NOTES:

1 FOR CONSTRUCTION AND DIMENSIONS OF WATER METER BOX AND CONCRETE PAD, SEE DWG. 2362, 2363, 2368 & 2369.

2 BECAUSE OF LIMITED SPACE, METER BOXES MAY BE ROTATED 90°. CONNECTIONS TO BE MADE PER WATER SYSTEMS DIVISION APPROVAL.

3 DOUBLE METER BOXES SHALL BE CENTERED ON ADJOINING PROPERTY LINES.

CONSTRUCTION NOTES:

A CURB.
B BACK OF CURB.
C SIDEWALK.
D METER BOX COVER, SEE DWGS. 2368 OR 2369.
E 1/2" EXPANSION JOINT.
F EDGE OF UNCURBED STREET OR GRADED STREET.
G PROPERTY LINE.
H DRIVEPAD.
J CONCRETE PAD SEE DWG. 2362
K #4 REBAR CONTINUOUS ALL AROUND METER BOX.

2/22 TYPICAL METER BOX INSTALLATIONS FOR 3/4" AND 1" METERS

SCALE: N.T.S. — C.O.A. STD. DWG. 2361

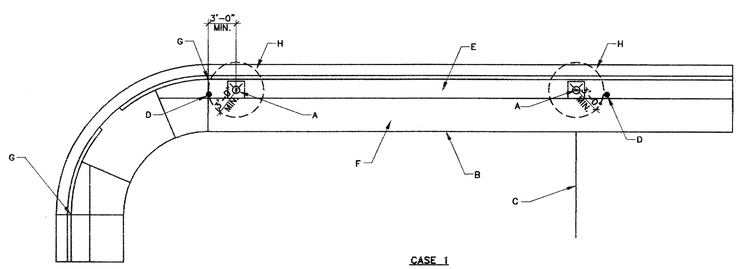

CASE 1
(WITH PARKWAY BEHIND CURB AND GUTTER)

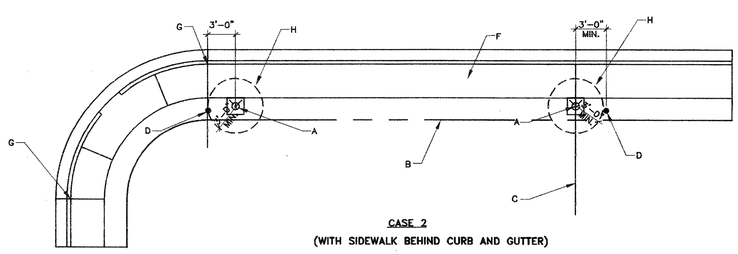

CASE 2
(WITH SIDEWALK BEHIND CURB AND GUTTER)

GENERAL NOTES:

1 FIRE HYDRANTS ARE NOT TO BE LOCATED WITHIN THE CURB RETURN AREA. FIRE HYDRANTS LOCATED IN THE MID BLOCK LENGTH SHALL BE CENTERED ON ADJOINING PROPERTY LINES.

2 A MINIMUM CLEARANCE OF 3' SHALL BE PROVIDED BETWEEN FIRE HYDRANT AND ANY PERMANENT OBSTRUCTION (UTILITY POLE, LIGHT STANDARD, TRAFFIC SIGNAL, ETC.).

3 FOR FIRE HYDRANT INSTALLATION DETAILS SEE DWG. 2340.

CONSTRUCTION NOTES:

A FIRE HYDRANT
B RIGHT-OF-WAY OR EASEMENT LINE
C PROPERTY LINE
D PERMANENT OBSTRUCTION
E PARKWAY
F SIDEWALK
G PC OR PT OF CURB RETURN
H MAINTAIN A MINIMUM CLEARANCE OF 3' RADIUS FROM CENTER OF HYDRANT TO ANY AND ALL OBSTRUCTIONS.

3/22 TYPICAL FIRE HYDRANT LOCATION

SCALE: N.T.S. — C.O.A. STD. DWG. 2347

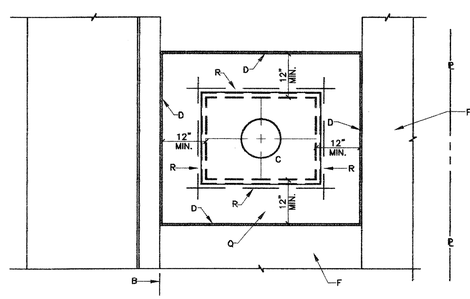

PLAN
SEE DWG. 2361 FOR TYPICAL INSTALLATIONS

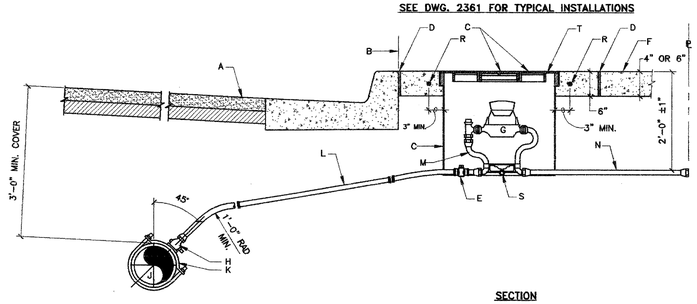

SECTION
SERVICE LINE FOR 3/4" - 1" METER

GENERAL NOTES:

1 THE METER SHALL BE SET UTILIZING A COPPER-SETTER. COPPER-SETTER HEIGHT 10" FOR 1" METER. 7" FOR 3/4" METER.

2 THE VALVE AND METER REGISTER BOX SHALL BE LOCATED UNDER THE LID OPENING. WHERE TWO METERS ARE TO BE INSTALLED IN A SINGLE METER BOX, THE METER REGISTERS SHALL BE WITHIN READING RANGE OF THE LID OPENING.

3 METER BOX LOCATION TO CONFORM TO DWG. 2361.

4 WHEN CONTRACTOR DOES NOT INSTALL METER, CONTRACTOR SHALL PROVIDE REMOVABLE PLUGS FOR END OF COPPER-SETTER.

5 EXISTING CONCRETE TO BE SAWCUT.

CONSTRUCTION NOTES:

A STREET SURFACE.
B BACK OF CURB.
C CAST IRON METER BOX, COVER AND LID. SEE DWG. 2368 OR 2369.
D 1/2" EXPANSION JOINT.
E CURB STOP, LOCATE INSIDE METER BOX.
F SIDEWALK OR DRIVEPAD.
G METER. TOP OF METER TO BE 12"-18" BELOW COVER.
H CORP STOP.
J MAIN WATER LINE.
K TAPPING SADDLE.
L COPPER SERVICE LINE.
M COPPER SETTER.
N TAILPIECE TO PROPERTY LINE WITH INSTA-TITE I.P.T. CAPPED FITTING.
Q CONCRETE PAD REQUIRED IN ALL AREAS.
R #4 REBAR CONTINUOUS ALL AROUND METER BOX.
S STABILIZER BAR. 12" LONG X 1/2" DIAMETER GALVANIZED STEEL PIPE.
T METER BOX LID SHALL BE FLUSH WITH SURROUNDING SIDEWALK.

4/22 METERED SERVICE LINE INSTALLATION FOR 3/4" AND 1" METERS

SCALE: N.T.S. — C.O.A. STD. DWG. 2362

AS BUILT INFORMATION
Contractor
Work Staked By
Staking Checked By
Acceptance By
Field Verification By
Drawings Corrected By
MICRO-FILM INFORMATION
Recorded By — Date
No.

BENCH MARKS
ELEVATIONS ARE BASED ON CITY OF ALBUQUERQUE STATION NO. "NM45-7A" HAVING AN ELEVATION OF 4953.487.

SURVEY INFORMATION
FIELD NOTES
No.

ENGINEERS SEAL
EDWARD L. JOSINSKI — NEW MEXICO — 14176 — REGISTERED PROFESSIONAL ENGINEER — 12-6-07

No.	Date	REMARKS	Date
		REVISIONS	
		DESIGN	

Designed By E.J.L. Date
Drawn By T.D.S. Date
Checked By E.J.L. Date

JEL & ASSOCIATES, LLC
P.O. BOX 3180/250 BAZAN LP.
CORRALES, N.M. 87048
505 823-1556
505-823-2192 FAX
jelassoc@comcast.net
ENGINEERING O CONSULTING

CITY OF ALBUQUERQUE
PUBLIC WORKS DEPARTMENT
ENGINEERING GROUP

TITLE: SUNSHINE WEST SUBDIVISION 1
TYPICAL WATER DETAILS

12-6-07

Last Design Update — Mo./Day/Yr. — Mo./Day/Yr.

City Project No. 7785.82 — Zone Map NO. N-10 — Sheet 14 Of 16

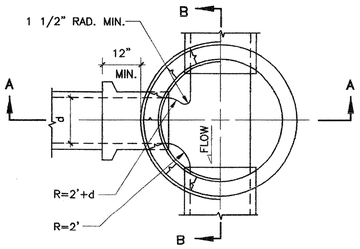

PLAN AT C–C

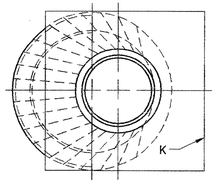

PLAN AT D–D

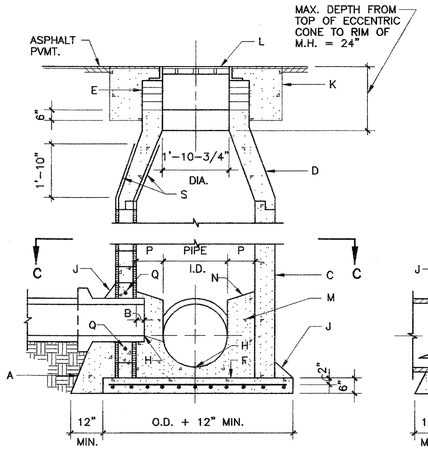

CROSS SECTION A–A

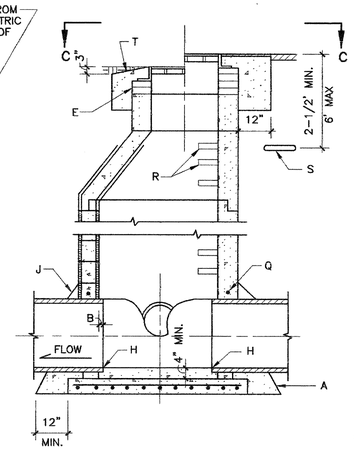

CROSS SECTION B–B

GENERAL NOTES:

1. TYPE "E" M.H. NOT FOR DEPTHS LESS THAN 6' MEASURED FROM INV. TO RIM.
2. MANHOLE GREATER THAN 18' IN DEPTH SHALL BE OF PRECAST CONCRETE SECTIONS ONLY.
3. DESIGN APPLIES TO 4' & 6' I.D. MANHOLES.
4. USE NON–SHRINK GROUT FOR JOINTS, FILLETS AND PENETRATIONS.
5. COMPACT ALL BACKFILL AROUND M.H. TO 95%.
6. POSITION M.H. OPENING OVER THE UPSTREAM SIDE OF MAIN LINE.

CONSTRUCTION NOTES:

A. CONCRETE PIPE SUPPORTS SHALL EXTEND OUTSIDE OF M.H. TO BELL OF FIRST JOINT AND SHALL CRADLE PIPE TO SPRING LINE.

B. PIPE PENETRATION INTO MANHOLE SHALL BE FLUSH TO 2" MAX., MEASURED AT SPRING LINE OF PIPE.

E. USE MAX. 4 COURSES GR. MS BRICK ON UNPAVED STREET FOR FUTURE ADJ. OF M.H. FRAME TO PVMT. GRADE. PLASTER INSIDE WITH 1/2" MORTAR.

F. CONCRETE BASE TO BE POURED IN PLACE USING NO. 4 BARS AT 6" O.C. EA. WAY FOR M.H. DEPTH OF 16' OR GREATER. NO. 4 BARS AT 12" O.C. EA. WAY FOR M.H. LESS THAN 16' IN DEPTH.

H. INV. EL. OF STUB OR LATERAL AS SHOWN ON PLANS.

J. 6" GROUT FILLET ON UPPER HALF OF PIPE AND AROUND BASE.

K. USE A 5' X 5' CONC. PAD IN ALL AREAS.

L. FRAME AND COVER, SEE DWG. 2110.

M. CONCRETE FILL, 3000 PSI.

N. SLOPE 1" PER FOOT FROM PIPE CROWN.

P. SHELF TO BE 9" WIDE MINIMUM.

Q. APPROVED WATERSTOP TO BE COMPATIBLE WITH TYPE OF PIPE.

R. STEPS TO BE INSTALLED AS PER SPEC SECTION 920.4.7.

S. EMD (IN UNPAVED AREAS).

T. IN UNPAVED AREAS SET FRAME TO GRADE AND SLOPE TOP OF PAD.

1/23 TYPICAL MANHOLE TYPE "E"

SCALE: N.T.S. C.O.A. STD. DWG. 2102

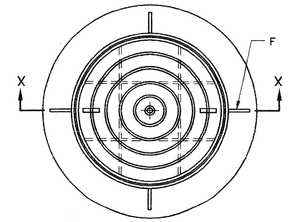

PLAN

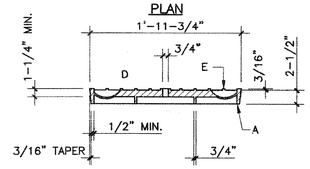

SOLID COVER (80 LB.)

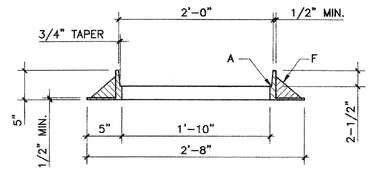

FRAME

SECTION X–X

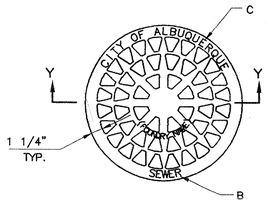

PLAN

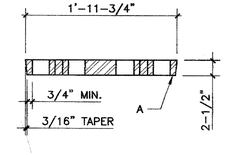

SECTION Y–Y

VENTED COVER (135 LB.)

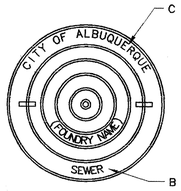

LETTERING PLAN

GENERAL NOTES:

1. STANDARD CAST IRON MANHOLE FRAME AND COVER. WEIGHTS: COVER = 180 LBS. FRAME = 145 LBS. TOTAL = 325 LBS (TOLERANCE = ±5%)
2. REFERENCE SPEC. SECTION 130.

CONSTRUCTION NOTES:

A. MACHINED OR GROUND BEARING SURFACES.

B. "SEWER", "WATER" OR "STORM" CAST ON COVER TO IDENTIFY SANITARY SEWER, WATER OR STORM DRAINAGE SYSTEMS RESPECTIVELY.

C. LETTER SIZE TO BE 1" MIN. IN HEIGHT, TYP.

D. VENT HOLE REQUIRED.

E. MONOLITHIC CAST IRON OR STEEL ROD INSERTS AT MANUFACTURER'S OPTION. IF INSERT IS PROVIDED, IT MUST HAVE 3/16" MIN. COVER AND 3/4" END EMBEDMENT IN CASTING.

F. GUSSETS OPTIONAL IF REQUIRED BY MANUFACTURER.

2/23 TYPICAL MANHOLE FRAME AND COVER

SCALE: N.T.S. C.O.A. STD. DWG. 2110

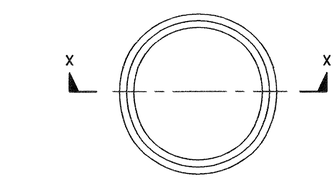

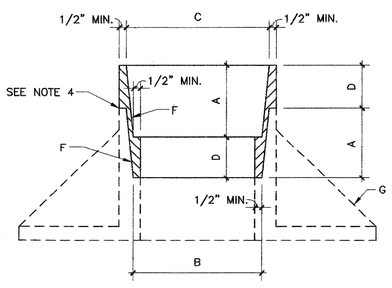

SECTION X–X

GENERAL NOTES:

1. ADJUSTMENT RING MADE FROM STANDARD ALUMINUM CASING, ALLOY 319.
2. I.D., O.D. AND DEPTH SHALL BE MACHINED TO REQUIRED DIMENSIONS.
3. BECAUSE OF VARYING EXISTING FRAME AND COVER SIZES, ALL DIMENSIONS MUST BE FIELD VERIFIED PRIOR TO MACHINING.
4. ALL EDGES OF RING SHALL BE LIGHTLY GROUND AFTER MACHINING TO REMOVE SHARPNESS AND BURRS.
5. COAT ALL SURFACES OF RING WITH CLEAR ACRYLIC RESIN AFTER MACHINING.

CONSTRUCTION NOTES:

A. DIMENSION = DEPTH OF EXISTING COVER EDGE.

B. DIMENSION = RING O.D. = FRAME I.D. AT SEAT.

C. DIMENSION = RING I.D. = FRAME O.D. AT RIM.

D. DIMENSION = HEIGHT OF RING ADJUSTMENT.

E. EXISTING GRAME AND COVER SHALL BE CLEANED AND REUSED.

F. TAPER = 1/2 x (C–B)

G. EXISTING FRAME.

A	B	C	D
2 3/8	23 1/2	23 3/8	
2 1/2	23 5/8	23 3/4	
2 3/8	23 5/8	23 3/4	
2	23 3/4	23 7/8	
2 1/4	23 3/4	23 7/8	
2 3/8	23 3/4	23 7/8	
2 1/2	23 3/4	23 7/8	
2 3/8	23 3/4	23 7/8	
2 3/4	23 3/4	23 7/8	
2 1/2	23 7/8	24	
1	23 7/8	25	1 1/4

3/23 SEWER MANHOLE COVER ADJUSTMENT RING

SCALE: N.T.S. VERTICAL SCALE EXAGGERATED FOR CLARITY C.O.A. STD. DWG. 2111

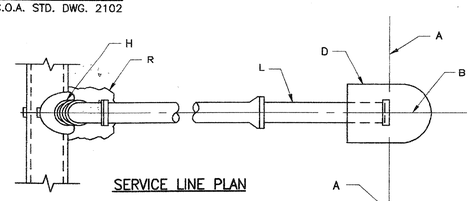

SERVICE LINE PLAN

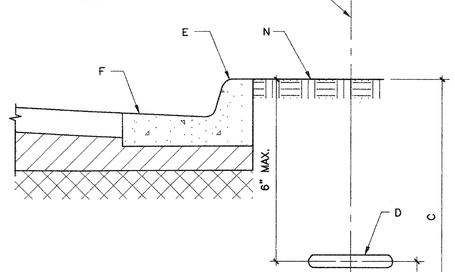

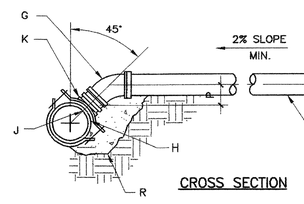

CROSS SECTION

GENERAL NOTES:

1. ALL SERVICE LINES SHALL CONFORM TO THE PLUMBING CODE OF CITY OF ALBUQUERQUE AND TO CHAPTER 24 SECTION 2 PART E, DEVEL. PROC. MANUAL.

CONSTRUCTION NOTES:

A. RIGHT–OF–WAY LINE.

B. CENTERLINE SERVICE LINE.

C. MINIMUM OF 4' FROM INVERT TO TOP OF CURB–AT–RIGHT OF WAY LINE.

D. ELECTRONIC MARKER DISC, COLOR CODED GREEN, PLACED ONLY IF SERVICE HOOK–UP IS POSTPONED.

E. STAMP OR CHISEL 3" SIZE "S" ON TOP OF CURB OVER LOCATION OF SERVICE LINE, MIN. 1/4" DEEP.

F. CURB AND GUTTER.

G. 22.5° OR 45° BEND.

H. CORE DRILLED, USING FOWLER QUIK–WAY DRILL SYSTEM, OR PILOT HOLE CUTTER SYSTEM OR APPROVED EQUAL.

J. SERVICE LINE SHALL NOT PROTRUDE INTO SEWER MAIN.

K. SANITARY SEWER TAPPING TEE, USING PIONEER OR GENERAL ENGINEERING CO. SADDLES OR APPROVED EQUAL. DO NOT OVER TIGHTEN SADDLE BOLTS WHICH WOULD PREVENT FREE PASSAGE OF REQUIRED MANDREL.

L. SERVICE LINE, (C.I. SOIL PIPE, SERVICE WEIGHT PVC SCH 40 OR ABS SCH 40.)

M. PLUG OR CAP.

N. GROUND LEVEL.

P. SAME ELEVATION OR HIGHER.

Q. APPROX. 6" BUT DEPTH OF BURY SHALL NOT BE MORE THAN 6'.

R. BACKFILL UNDER SERVICE WITH MIN. 1 CUBIC FOOT OR P.C. CONCRETE ("SACKRETE" OR EQUAL ALLOWABLE THIS INSTALLATION).

4/23 SEWER SERVICE LINE DETAILS

SCALE: N.T.S. C.O.A. STD. DWG. 2125

AS BUILT INFORMATION
Contractor
Work Staked By
Inspector's Acceptance By
Field Verification By
Drawings Corrected By
MICRO–FILM INFORMATION
Recorded By
Date
No.

BENCH MARKS
ELEVATIONS ARE BASED ON CITY OF ALBUQUERQUE STATION NO. "NM45–7A" HAVING AN ELEVATION OF 4953.487.

SURVEY INFORMATION
FIELD NOTES
No.

ENGINEERS SEAL
EDWARD J. LOSINSKI NEW MEXICO 13276 REGISTERED PROFESSIONAL ENGINEER 12/26/07

No.	Date	REMARKS	Date
		REVISIONS	
		DESIGN	

Designed By E.J.L. Date
Drawn By T.D.S. Date
Checked By E.J.L. Date

JEL & ASSOCIATES, LLC
P.O. BOX 3180/250 BAZAN LP.
CORRALES, N.M. 87048
505 823–1556
505–823–2192 FAX
jelassoc@comcast.net
ENGINEERING O CONSULTING

CITY OF ALBUQUERQUE
PUBLIC WORKS DEPARTMENT
ENGINEERING GROUP

TITLE:
SUNSHINE WEST SUBDIVISION 1
TYPICAL SEWER DETAILS

12-6-07

Last Design Update Mo./Day/Yr. Mo./Day/Yr.

City Project No. 7785.82 | Zone Map NO. N–10 | Sheet 15 Of 16

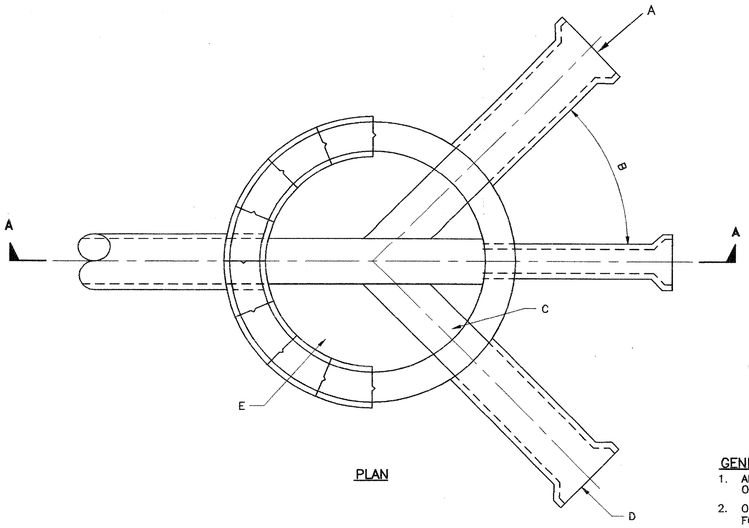

PLAN

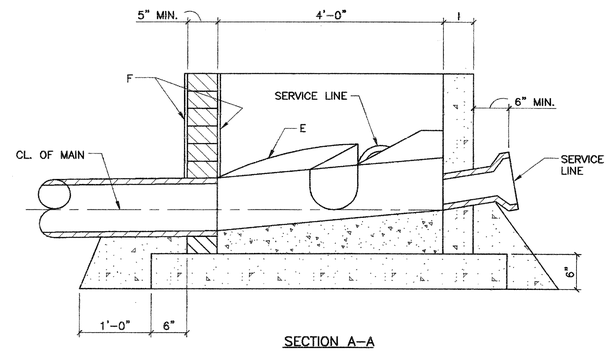

SECTION A–A

GENERAL NOTES:

1. ALL CONCRETE SHELF SLOPES TO BE ONE INCH PER FOOT.
2. ONE FOURTH INCH PER FOOT MIN. SLOPE FOR 4" OR 6" SERVICE LINE.
3. NEW SERVICE CONNECTIONS TO EXISTING MANHOLES MUST BE CORE DRILLED.
4. 8" OR LARGER SERVICE CONNECTIONS MUST BE MADE TO A MANHOLE.

CONSTRUCTION NOTES:

A. CAST IRON SERVICE STUB.
B. VARIABLE WITH MAX. ANGLE OF 90%.
C. FORM INVERT IN SHELF.
D. BELL END.
E. CONC. FILL TO BE TYPE II CEMENT.
F. PLASTER INSIDE AND OUTSIDE WITH 1/2" MORTAR.
G. INVERT ELEVATIONS OF SERVICE LINES SHALL BE THE SAME AS THE SPRING LINE ELEVATION OF THE SEWER MAIN.
H. MIN. 5" BLOCK FOR 4' I.D. M.H. 8" BLOCK OR DOUBLEWALL OF (2) 5" BLOCKS FOR 6' OR 8' DIAMETER MANHOLES.
I. PRECAST WALL THICKNESS:
4' I.D. M.H. – 5" MIN.
6' I.D. M.H. – 7" MIN.
8' I.D. M.H. – 9" MIN.

1/24 SEWER SERVICE LINE CONNECTIONS AT MANHOLE

SCALE: N.T.S.

C.O.A. STD. DWG. 2118

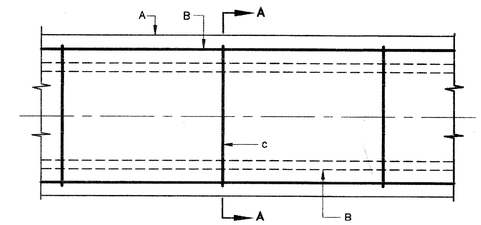

PLAN

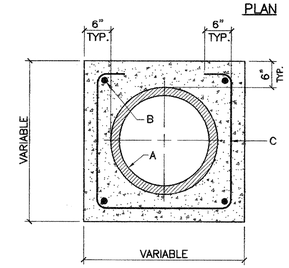

SECTION A–A

GENERAL NOTES:

1. WHERE A WATER LINE PASSES BENEATH OR LESS THAN 18" ABOVE AN EXISTING SEWER LINE, THE SEWER LINE SHALL BE ENCASED IN CONCRETE 6" THICK, AS DETAILED, FOR AT LEAST 10 FEET ON EACH SIDE OF THE WATER LINE OR THE SEWER LINE SHALL BE D.I. OR C.I. PIPE WITH PRESSURE–TYPE JOINTS FOR AT LEAST 10 FEET ON EACH SIDE OF THE WATER LINE. THIS SHALL ALSO APPLY WHERE A PARALLEL WATER LINE IS LESS THAN 10 FEET HORIZONTALLY AND LESS THAN 2 FEET ABOVE THE SEWER LINE.

CONSTRUCTION NOTES:

A. SANITARY SEWER LINE AS SHOWN ON PLANS.
B. 4 – #4 BARS, CONT. W/ 3" CLEARANCE.
C. #4 BARS @ 36" O.C.

2/24 SEWER ENCASEMENT DETAIL

SCALE: N.T.S.

C.O.A. STD. DWG. 2140

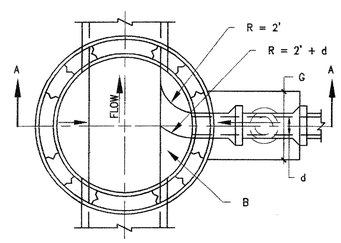

FLOOR PLAN

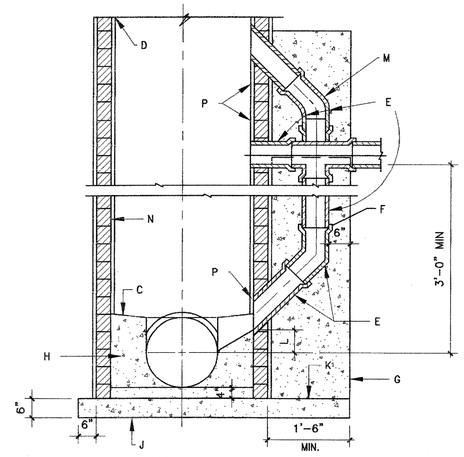

SECTION A–A

CONSTRUCTION NOTES:

A. VERTICAL DROP.
B. FORM THE INVERT IN SHELF.
C. SLOPE, 1" PER FT.
D. MANHOLE TYPE FOR UPPER PORTION WILL BE SPECIFIED ON DESIGN PROFILE.
E. USE D.I. OR P.V.C. (SDR 35) PIPE THROUGHOUT DROP.
F. USE BELL AND SPIGOT 45° SHORT OR LONG RADIUS BEND.
G. CONC. SUPPORT WIDTH EQUALS PIPE O.D. PLUS 6" MIN. EACH SIDE.
H. CONCRETE, SEE SECTION 101.
J. REINFORCED CONCRETE BASE. SEE CONSTRUCTION NOTE F. OF DWG. 2101, 2102.
K. FOR NEW DROP ON EXIST. MANHOLE CONSTRUCT 3 X 3 CONC. BASE BEFORE CONSTRUCTING DROP SUPPORT.
L. 4" ABOVE SPRING LINE OR AS SHOWN ON PLAN.
M. 8" MIN. DIAMETER, 2– 22 1/2° OR 1– 45° ELBOW.
N. INTERIOR OR DROP MANHOLE MUST BE COATED WITH APPROVED SEALER IN ACCORDANCE WITH SPEC. SECTION 920.4.
P. CORE DRILL FOR ALL WALL PENETRATIONS ON EXISTING MANHOLES.
Q. CROSS OR TEE. A TEE MAY BE USED ONLY WHEN THE VERTICAL HIGH IS INSUFFICIENT FOR THE VERTICAL PIPPING ABOVE THE SEWER LINE TO ENTER THE BARREL OF THE MANHOLE.

3/24 SEWER ENCASEMENT DETAIL

SCALE: N.T.S.

C.O.A. STD. DWG. 2116

AS BUILT INFORMATION
Contractor
Work Staked By
Inspector's Acceptance By
Field Verification By
Drawings Corrected By

MICRO–FILM INFORMATION
Recorded By
Date
No.

BENCH MARKS
ELEVATIONS ARE BASED ON CITY OF ALBUQUERQUE STATION NO. "NM45–7A" HAVING AN ELEVATION OF 4953.487.

SURVEY INFORMATION
FIELD NOTES
No.

ENGINEERS SEAL
EDWARD L. LOS/MAN
NEW MEXICO
12376
12-06-07
REGISTERED PROFESSIONAL ENGINEER

No.	Date	REMARKS	Date
		REVISIONS	
		DESIGN	

Designed By E.J.L. Date
Drawn By T.D.S. Date
Checked By E.J.L. Date

JEL & ASSOCIATES, LLC
P.O. BOX 3180/250 BAZAN LP.
CORRALES, N.M. 87048
505 823–1556
505–823–2192 FAX
jelassoc@comcast.net
ENGINEERING O CONSULTING

CITY OF ALBUQUERQUE
PUBLIC WORKS DEPARTMENT
ENGINEERING GROUP

TITLE:
SUNSHINE WEST SUBDIVISION 1
TYPICAL SEWER DETAILS

12-6-07

Last Design Update | Mo./Day/Yr. | Mo./Day/Yr.

City Project No. 7785.82 | Zone Map NO. N–10 | Sheet 16 Of 16