184481

SCANNED BY PLANNING

2 3 6 5 6 7 8 9 10 11 12 13 14 15
2 6 - 7 9 9 4 . 8 1 - 0 7

CITY OF ALBUQUERQUE
PRIVATE FIRE LINE INSTALLATION

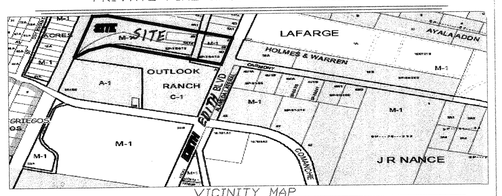

VICINITY MAP

LEGAL DESCRIPTION OF PROPERTY AND ADDRESS

4949 Edith Blvd. N.E.
Tract 3 A MRGCD Map 33

NOTICE TO CONTRACTORS

1. An excavation/barricade permit will be required before beginning any work within City, County, or Village right-of-way. An approved copy of these plans must be submitted at the time of application for these permits.
2. All work detailed on these plans to be done, except as otherwise stated or provided hereon, will be constructed in accordance with "City of Albuquerque Interim Standard Specification for Public Works Construction, 1986," latest revision.
3. Two working days prior to any excavation, the contractor must contact New Mexico One Call System, Inc., 260-1990, for location of existing utilities.
4. Prior to construction, the contractor will excavate and verify the horizontal and vertical locations of all construction. Should a conflict exist, the contractor will notify the Construction Engineer so that the conflict can be resolved with a minimum amount of delay.
5. The contractor will be responsible for coordinating the water shutoff with the Water Division seven (7) working days prior to construction.
6. The contractor will be responsible for performing soil density tests as required by the City of Albuquerque.

APPROVALS FOR	NAME	DATE	TITLE OF PROJECT:
DESIGN UTILITY DEVELOPMENT	William J. Pedel	12/26/06	Holly Asphalt Private Fire Line Owner: Holly Asphalt Contact: John Baumgartel 856-1699 Drawn By: TLC Plumbing & Utility (761-9696)
CONSTRUCTION CONSTRUCTION ENGINEER		1/25/07	Constructed By: TLC Plumbing & Utility Contact: Howard Ross 321-0751
ACCEPTANCE: CONSTRUCTION INSPECTOR		1/25/07	PROJECT NO. 799481 / ZONE ATLAS G-15 / SHEET 1 OF 5

hydrant1.dwg

CITY OF ALBUQUERQUE
PRIVATE FIRE LINE INSTALLATION
SITE DETAIL

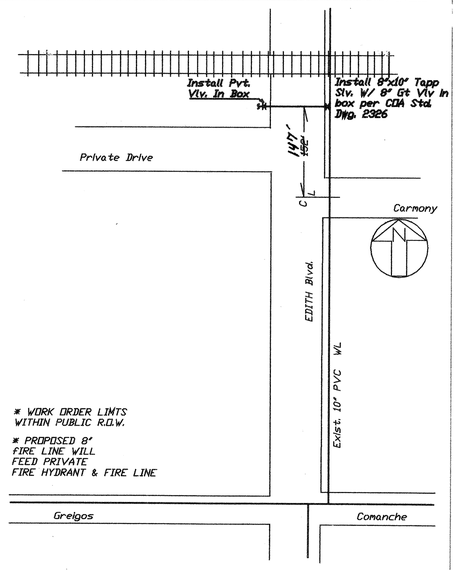

PROJECT NO. 799481	ZONE ATLAS G-15	TITLE: Holly Asphalt Private Fire Line
SHEET 2 OF 5		

hydrant2.dwg

CITY OF ALBUQUERQUE
PRIVATE FIRE LINE INSTALLATION
EMERGENCY WATER SHUT OFF PLAN

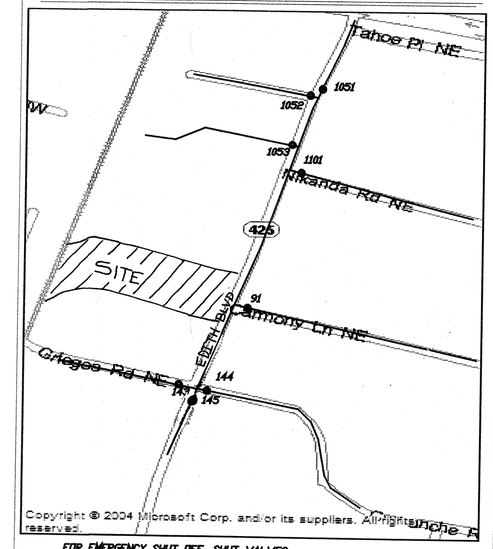

FOR EMERGENCY SHUT OFF, SHUT VALVES:
143,145,144,91,1101,1053,1052 & 1051

PROJECT NO. 799481	ZONE ATLAS G-15	TITLE: Holly Asphalt Private Fire Line
SHEET 3 OF 5		

hydrant2.dwg

CITY OF ALBUQUERQUE
PRIVATE FIRE LINE INSTALLATION
STANDARD DRAWING 2340-A

GENERAL NOTES
1. No obstruction will be permitted within 3'-0" of fire hydrant.
2. Hydrant leg shall be valved from mains 10" diameter and larger and in arterial streets located in commercial areas.
3. Contractor shall be responsible for setting top flange of fire hydrant to the dimensions shown.
4. For fire hydrant locations, see dwg. 2347-A.
5. When new or existing sidewalk abuts curb, reconstruct sidewalk per dwg. 2430, 2431.
6. Pumper nozzle to be set facing the traveled way, unless otherwise noted on plans.

CONSTRUCTION NOTES
A. Fire hydrant per specifications
B. Pumper nozzle 4 1/2"
C. Hose nozzle 2 1/2"
D. 1/2" expansion joint material
E. Slope 1/4" per foot
F. 3' x 3' x 6" concrete square pad, to be constructed around fire hydrant's centerline when not located within sidewalk or concrete area.
G. Back of curb
H. Controlled elevation line, level in all directions.
J. Use of restrained joints is mandatory. All fire hydrant leg piping and fittings including tee on main shall be restrained joint.
K. Gravel drain pocket, cover top surface with tar paper.
L. Standard curb & gutter. For other types of curb & gutter, or where no curb & gutter exist, the placement of fire hydrant requires special design.
M. If valve is required, valve will be connected to tee at main.

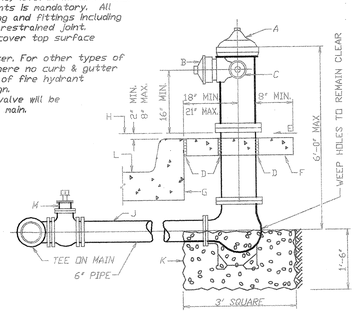

DETAIL OF FIRE HYDRANT SETTING

PROJECT NO. 799481	ZONE ATLAS G-15	TITLE: Holly Asphalt Private Fire Line
SHEET 4 OF 5		

hydrant3.dwg

CITY OF ALBUQUERQUE
PRIVATE FIRE LINE INSTALLATION
STANDARD DRAWING 2347-A

GENERAL NOTES
1. Normally, fire hydrants are located at end of curb return; hydrants will not be located within the curb return area. Fire hydrants to be located within the block length will be installed at a property line (Case 4).
2. A minimum clearance of 3'-0" will be provided between a fire hydrant and a permanent obstruction (utility pole, light standard, traffic signal, etc.).
3. For installation of fire hydrant, see dwg 2340-A.
4. See dwg 2431 for sidewalk configuration when fire hydrant is located in sidewalk.

CONSTRUCTION NOTES
A. Water main
B. Fire hydrant
C. Curb and gutter
D. Right-of-way line
E. Property line

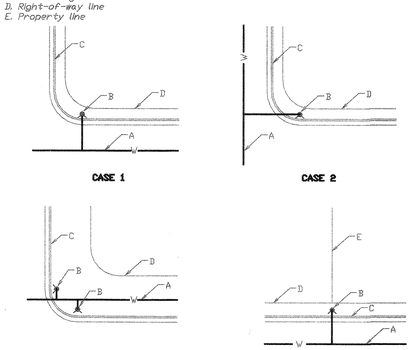

TYPICAL LOCATIONS

PROJECT NO. 799481	ZONE ATLAS G-15	TITLE: Holly Asphalt Private Fire Line
SHEET 5 OF 5		

hydrant4.dwg