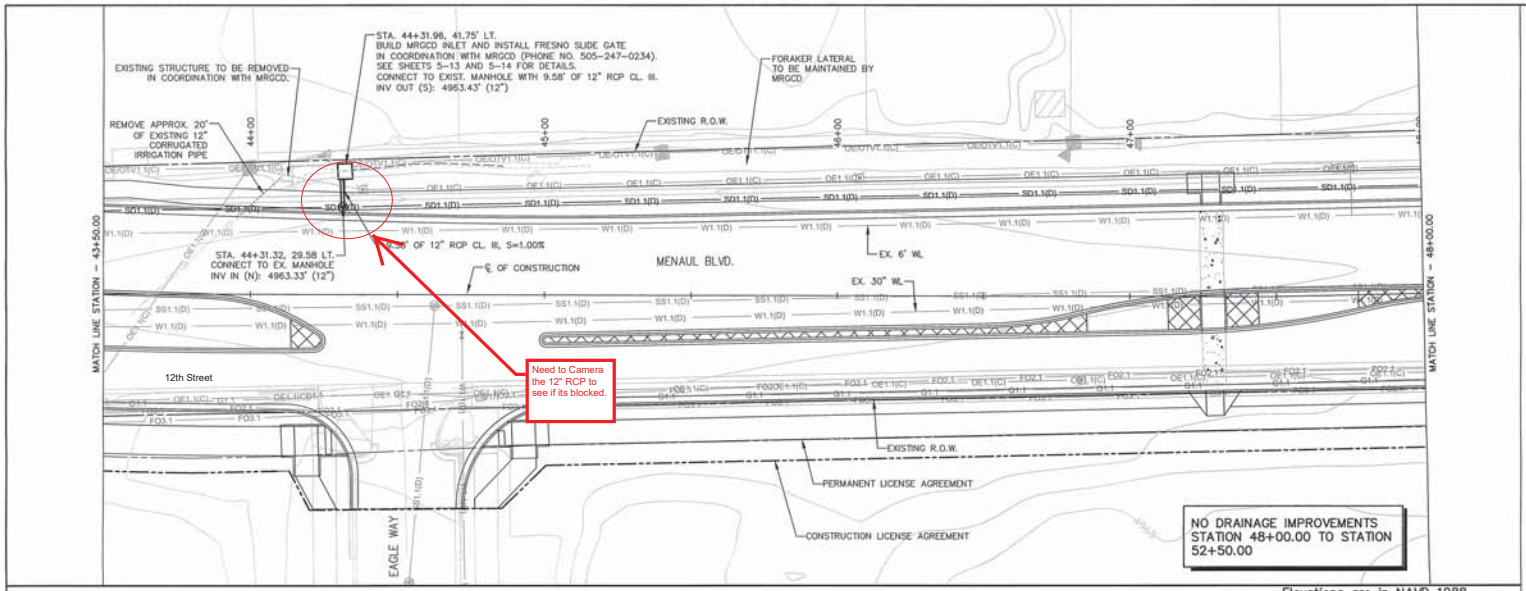

Elevations are in NAVD 1988

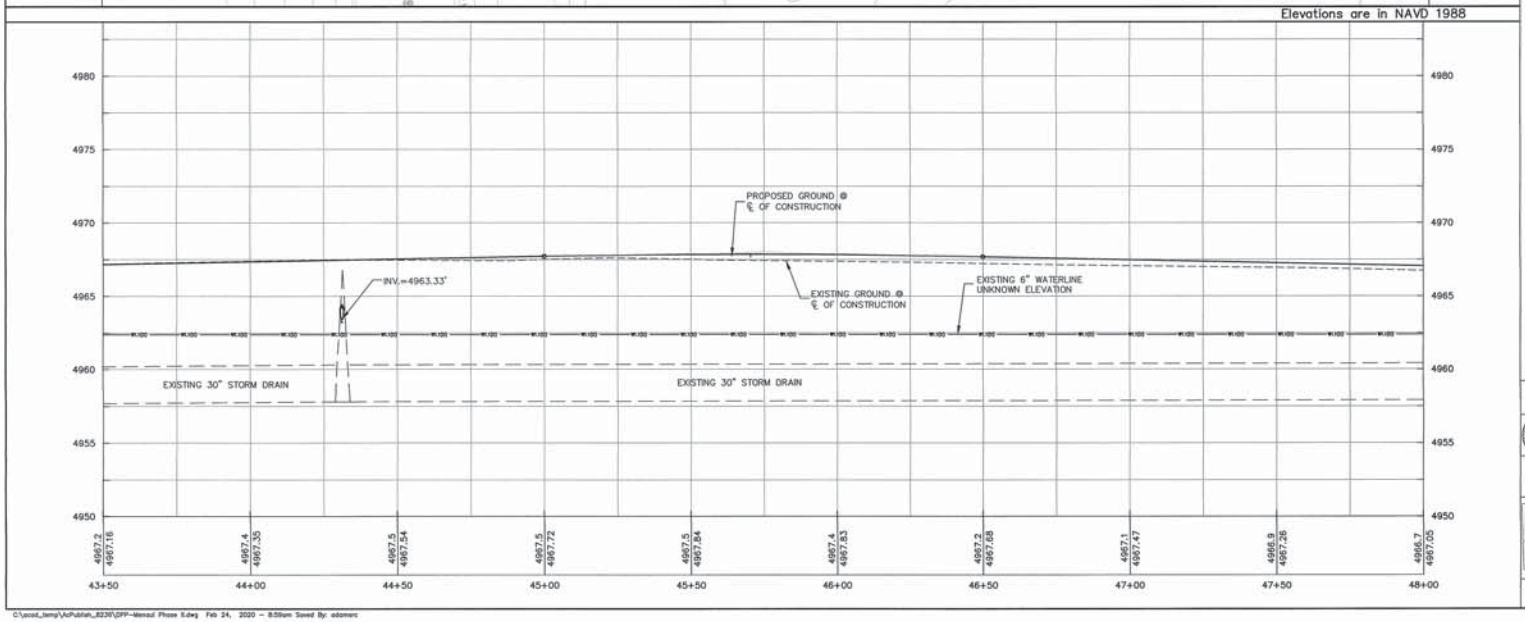

GENERAL NOTES:

1. STATION AND OFFSET FOR INLETS GIVEN TO FLOWLINE OF GUTTER UNLESS OTHERWISE NOTED.
2. STATION AND OFFSET PROVIDED REFERENCE CL OF CONSTRUCTION ON:

   12TH STREET FOR 12TH ST. DRAINAGE P&P SHEETS
   MENAUL BLVD. FOR MENAUL BLVD. DRAINAGE P&P SHEETS
3. INLET FLOWLINE ELEVATIONS ARE GIVEN AT THE NORMAL GUTTER GRADE.
4. FOR TYPE A INLETS, SEE COA DWG. 2201 & 2202. USE MODIFIED GRATE DETAIL ON SHEET 5-8.
5. FOR WATERLINE DETAILS REFER TO ABCWUA PROJECT NO. 965.037XX PLANS.
6. FOR TYPE C INLETS, SEE COA DWG. 2205. USE MODIFIED GRATE DETAIL ON SHEET 5-8.
7. FOR TYPE D INLETS, SEE COA DWG. 2206. USE MODIFIED GRATE DETAIL ON SHEET 5-8.
8. FOR MANHOLES, SEE COA DWG. 2101.
9. PIPE LENGTHS ARE MEASURED FROM THE CENTER OF MANHOLE TO THE CENTER OF MANHOLE AND FROM THE CENTER OF MANHOLE TO THE INSIDE WALL OF INLETS.
10. TO CONNECT NEW AND EXISTING PIPES, USE THE COLLAR DETAIL ON SHEET 5-9.
11. PROTECT EXISTING WATERLINES AND SEWER LINES IN PLACE. REFER TO COA DWG. 2381 FOR ANY WATERLINE RELOCATIONS NECESSARY.
12. GAS UTILITIES SHOWN REFLECT THE BEST INFORMATION AVAILABLE. THE CONTRACTOR SHALL COORDINATE WITH NEW MEXICO GAS CO. (PHONE NO. 505-697-6802) PRIOR TO ANY EXCAVATION.

GRAPHIC SCALE

(IN FEET)
1 inch = 20 ft.

AS BUILT INFORMATION
CONTRACTOR | DATE
STAKED BY | DATE
INSPECTED BY | DATE
FIELD VERIFICATION BY | DATE
CORRECTIONS BY | DATE
RECORDED BY | DATE
MICRO-FILM INFORMATION
NO.

BENCH MARKS
COA GEODETIC CONTROL STATION "5-J-13A"
LOCATED AT THE INTERSECTION OF MOUNATIN RD. NW AND 19TH ST. BRASS, DISC SET FLUSH WITH THE TOP OF NORTH CURB MOUNTAIN RD. NW
NM STATE PLANE COORDS. (NAD 83)
N=1491318.377
E=1515633.327
NAVD 88 ELEV. = 4960.499

SURVEY INFORMATION
FIELD NOTES
NO. | BY | DATE

ENGINEER'S SEAL
CARLOS D. ROMO
NEW MEXICO
22650
PROFESSIONAL ENGINEER

NO.	DATE	REMARKS	BY

DESIGN
DESIGNED BY CDR DATE 2/6/20
DRAWN BY RCA DATE 2/6/20
CHECKED BY JEH DATE 2/6/20

WSP USA Inc.
8100 Uptown Blvd. NE
Suite 200
Albuquerque, NM 87110

CITY OF ALBUQUERQUE
DEPARTMENT OF MUNICIPAL DEVELOPMENT
ENGINEERING DIVISION
12th STREET GREAT STREET PROJECT-PHASE 3
MENAUL BOULEVARD
DRAINAGE PLAN & PROFILES

DESIGN REVIEW COMMITTEE: FEB 26 2021 — DESIGN REVIEW COMMITTEE
CITY ENGINEER APPROVAL: FEB 23 2020 — CITY ENGINEER
MO./DAY/YR. | MO./DAY/YR.

City Project No. COA 7186.93 | Zone Map No. H13, H14 | Sheet 5-5

C:\pcad_temp\AcPublish_8230\DFP-Menaul Phase 5.dwg Feb 24, 2020 - 8:59am Saved By: adomarc

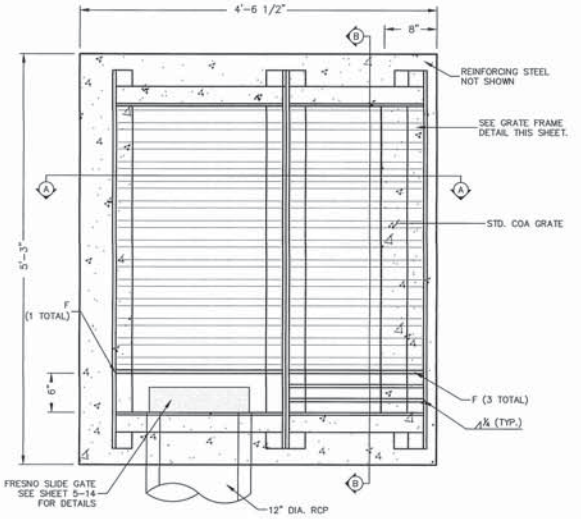

PLAN

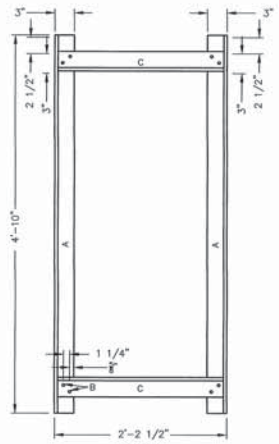

PLAN

SECTION

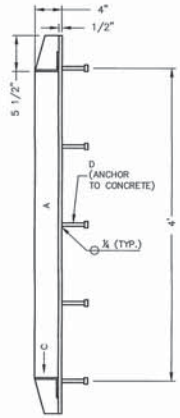

SECTION

GRATE FRAME DETAIL

GENERAL NOTES:

1. ALL EXPOSED METAL PARTS SHALL BE PAINTED PRIOR TO ASSEMBLY. WELDING, MACHINING, AND DRILLING SHALL BE DONE PRIOR TO PAINTING. ALL DIMENSIONS ARE FINISHED DIMENSIONS.
2. ALL METAL PARTS SHALL BE OF STRUCTURAL STEEL, GRADE 36.
3. AFTER CLEANING SURFACE OF SCALE, RUST, OILS, ETC., PAINT GRATE WITH ONE SHOP COAT RED OXIDE, TWO FINISH COATS ALUMINUM PAINT (AASHTO M 69)
4. FRAME MAY BE WELDED OR RIVETED.
5. ATTACH CHAIN TO EACH GRATE, SEE DETAIL.
6. ALL WORKMANSHIP AND MATERIALS, INCLUDING; FRAME, GRATE, CONCRETE, REBAR, ANCHORS, REINFORCING PIPE, SLIDE GATE, AND GRATE CHAIN SHALL BE PAID FOR AS MRGCD INLET.
7. CONTRACTOR SHALL FIELD VERIFY EXISTING TOP OF BANK AND DITCH BOTTOM ELEVATION PRIOR TO CONSTRUCTION

CONSTRUCTION NOTES:

A. 4" x 3" x 1/2" x 4'-9½" ∠
B. 2-3/8" RIVETS AT EACH CORNER
C. 3 - 1/2" x 3" x 3/8" x 2'-2½" ∠
D. 1/2"ø x 4" HEADED ANCHOR STUD @ 12" SPACING
E. PIPE 3 STD.: (O.D.=3.50", THICKNESS=0.216" (NOM.), L=4'-9⅜")
F. 3½" x 1/2" x 2'-1½" PLATE

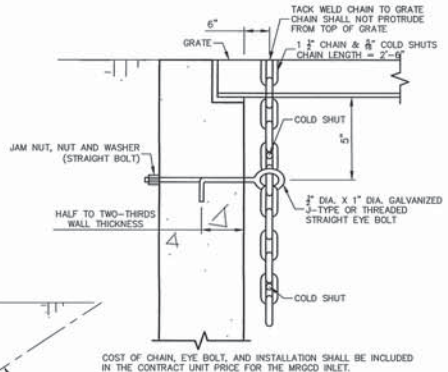

COST OF CHAIN, EYE BOLT, AND INSTALLATION SHALL BE INCLUDED IN THE CONTRACT UNIT PRICE FOR THE MRGCD INLET.

GRATE CHAINING DETAIL

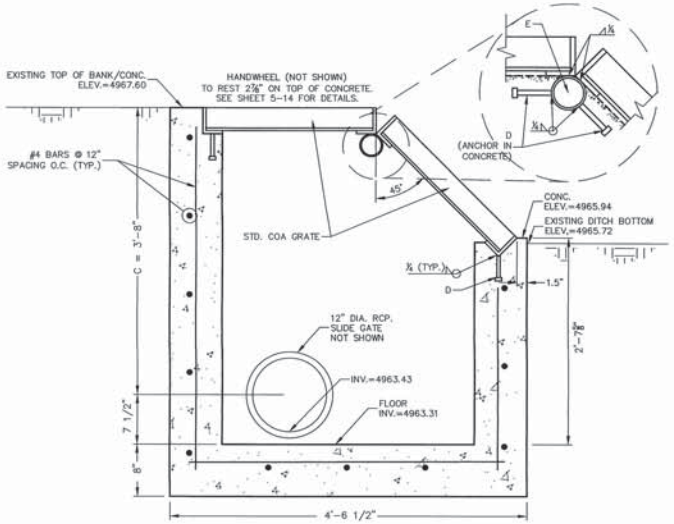

SECTION A-A

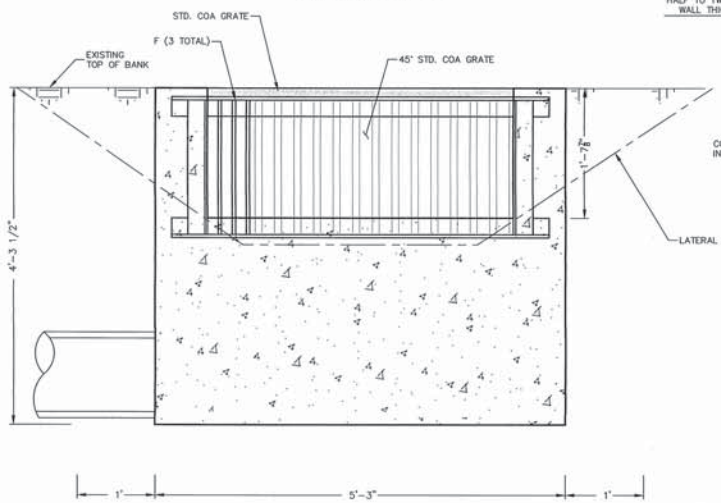

SECTION B-B

AS BUILT INFORMATION

CONTRACTOR	DATE
STAKED BY	DATE
ACCEPTANCE BY	DATE
FIELD VERIFICATION BY	DATE
DRAWINGS CORRECTED BY	DATE

MICRO-FILM INFORMATION

RECORDED BY	DATE
NO.	

BENCH MARKS

COA GEODETIC CONTROL STATION "5-J-13A"
LOCATED AT THE INTERSECTION OF MOUNATIN RD. NW AND 19TH ST. BRASS DISC SET FLUSH WITH THE TOP OF NORTH CURB MOUNTAIN RD. NW
NM STATE PLANE COORDS. (NAD 83)
N=1491318.377
E=1515633.327
NAVD 88 ELEV. = 4960.499

SURVEY INFORMATION

NO.	FIELD NOTES BY	DATE

ENGINEER'S SEAL

CARLOS D. ROMO
NEW MEXICO
22650
PROFESSIONAL ENGINEER

NO.	DATE	REMARKS	BY

DESIGN

		DATE
DESIGNED BY	CDR	2/6/20
DRAWN BY	RCA	2/6/20
CHECKED BY	JEH	2/6/20

WSP USA Inc.
8500 Menaul Blvd. NE
Suite 700
Albuquerque, NM 87110

CITY OF ALBUQUERQUE
DEPARTMENT OF MUNICIPAL DEVELOPMENT
ENGINEERING DIVISION
12th STREET GREAT STREET PROJECT-PHASE 3

MRGCD INLET DETAIL

DESIGN REVIEW COMMITTEE	CITY ENGINEER APPROVAL	MO./DAY/YR.	MO./DAY/YR.
APPROVED FEB 26 2020 DESIGN REVIEW COMMITTEE	APPROVED FEB 26 2020 CITY ENGINEER		

City Project No.	Zone Map No.	Sheet
COA 7186.93	H13, H14	5-13

J:\33686 12th Street Great Street\04 Engineering - COA 718692\Plans - Menau\3_Sheets\MRGCD Box Detail.dwg Feb 20, 2020 - 1:14pm Saved By: romocd