CITY OF ALBUQUERQUE,
NEW MEXICO
DEPARTMENT OF PUBLIC WORKS
WATER DIVISION

PLANS
FOR CONSTRUCTION
OF

RESERVOIR DRAINLINES

LOMAS-LINDA VISTA

09 007 0076 2020

AS CONSTRUCTED
DATE: JUNE 17, 1976.
SIGNED: [illegible]

MACCORNACK & BURNS
CONSULTING ENGINEERS INC.

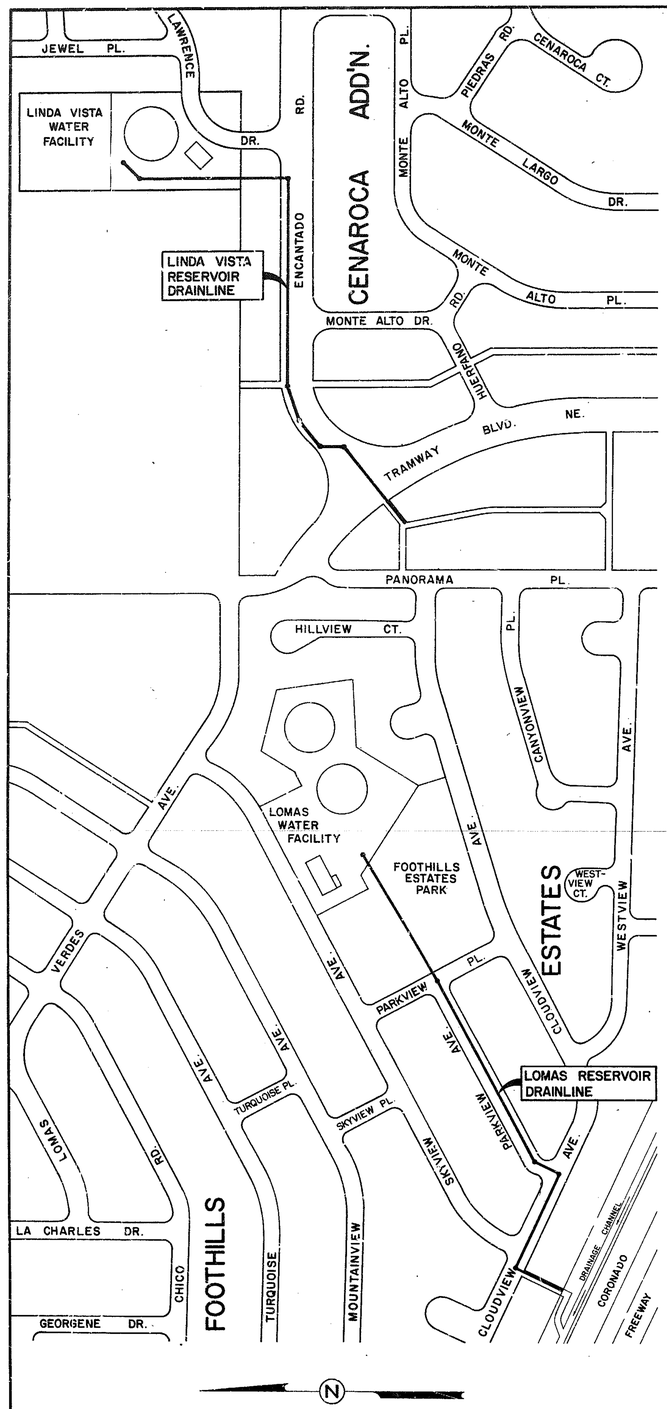

PROJECT VICINITY MAP 1"= 200'

INDEX OF DRAWINGS

RESERVOIR DRAINLINES LOMAS - LINDA VISTA

SHEET Nº	TITLE
1	VICINITY MAP - INDEX - DETAILS
2	TYPICAL MANHOLE DETAILS
3	RCP, TRENCH, PAVING AND INLET DETAILS
4	PLAN AND PROFILE - LOMAS
5	PLAN AND PROFILE - LOMAS
6	PLAN AND PROFILE - LINDA VISTA
7	PLAN AND PROFILE - LINDA VISTA
8	SITE AND GRADING PLANS AND STRUCTURAL DETAILS - LOMAS
9	SITE AND GRADING PLANS AND STRUCT. DET. - LINDA VISTA
10	CROSS SECTIONS

AS CONSTRUCTED

DATE: JUNE 17, 1976.

SIGNED: [illegible]

ALBUQUERQUE, NEW MEXICO

RESERVOIR DRAINLINES LOMAS - LINDA VISTA

PROJECT VICINITY
MAP
INDEX
MISCELLANEOUS DETAILS

MacCORNACK & BURNS
CONSULTING ENGINEERS, INC.
1721 GIRARD BLVD., N.E.
ALBUQUERQUE, NEW MEXICO 87106

SCALE	DATE	DRAWN: T.R.H.	SHEET 1
AS SHOWN	APRIL 1975	CHECKED: F.B.	of 10

09 007 0176 2121

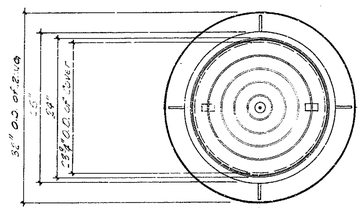

PLAN

	Cast Iron	Aluminum
Cover Weight	180 lbs.	60 lbs.
Ring Weight	145 lbs.	80 lbs.
Total Minimum Weight	325 lbs.	140 lbs.

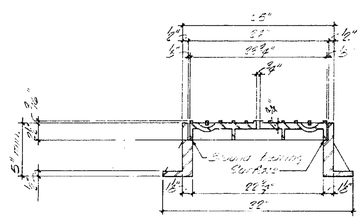

SECTION

STANDARD MANHOLE FRAME AND COVER DETAILS

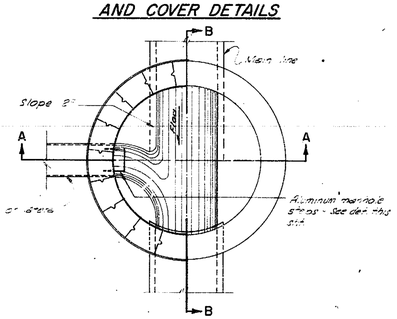

TYPICAL MANHOLE FLOOR PLAN

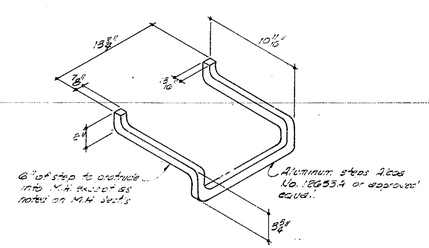

6" of step to protrude into M.H. except as noted on M.H. Sect's

TYPICAL MANHOLE STEP DETAIL

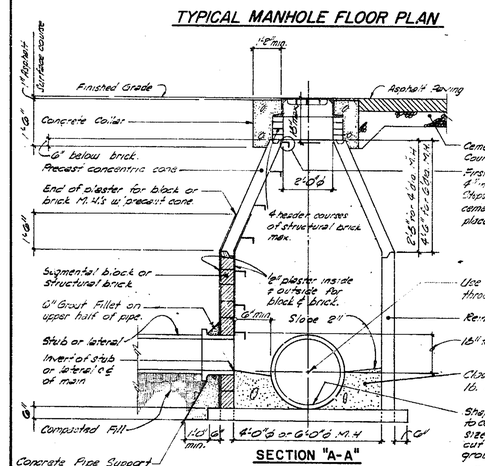

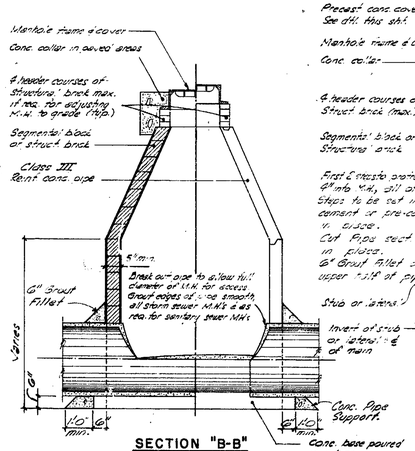

TYPE "B" MANHOLE SECTIONS

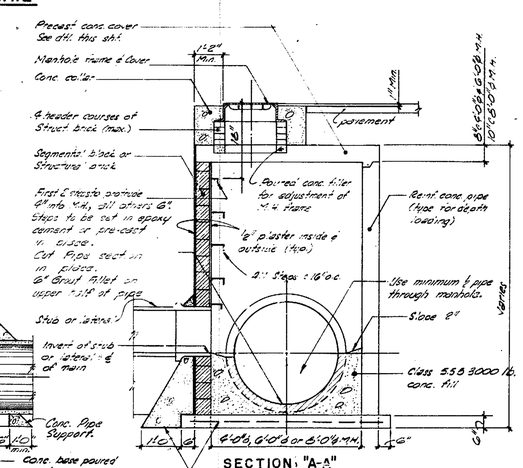

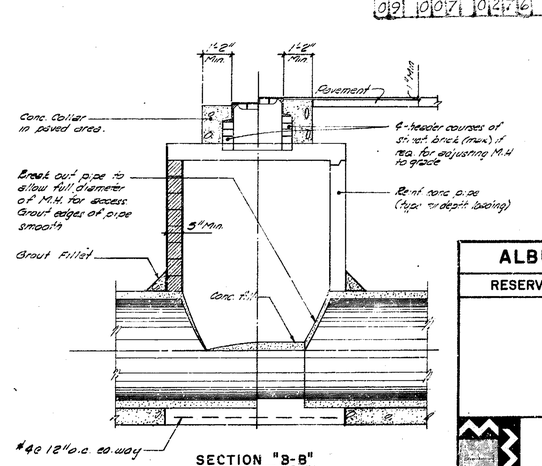

TYPE "C" MANHOLE SECTIONS

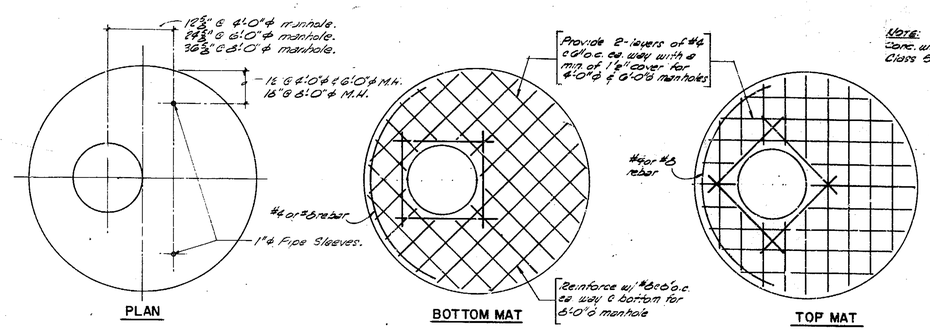

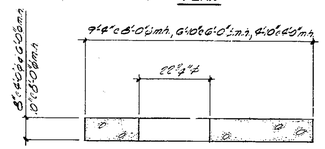

SECTION

REINFORCING FOR PRECAST CONCRETE COVER

PRECAST CONCRETE COVER

AS CONSTRUCTED

DATE: JUNE 17, 1976.

SIGNED: [illegible]

ALBUQUERQUE, NEW MEXICO

RESERVOIR DRAINLINES LOMAS - LINDA VISTA

TYPICAL MANHOLE DETAILS

MacCORNACK & BURNS
CONSULTING ENGINEERS, INC.
1721 GIRARD BLVD., N.E.
ALBUQUERQUE, NEW MEXICO 87106

SCALE	DATE	DRAWN: B.A.	SHEET 2
NONE	APRIL 1975	CHECKED: F.B.	of 10

PIPE DIA.	A	B	C	D	E	F	G	H	J	K	L
15"	3"	5/8"	3/8"	1/2"	1 9/16"	21/64"	2 1/4"	1/2"	1 9/16"	5 5/8"	3/4"
18"	3"	5/8"	3/8"	1/2"	1 9/16"	21/64"	2 1/4"	1/2"	1 9/16"	5 5/8"	3/4"
24"	3 1/4"	5/8"	3/8"	1 3/4"	1 5/8"	21/64"	3"	1/2"	1 13/16"	5 5/8"	3/4"

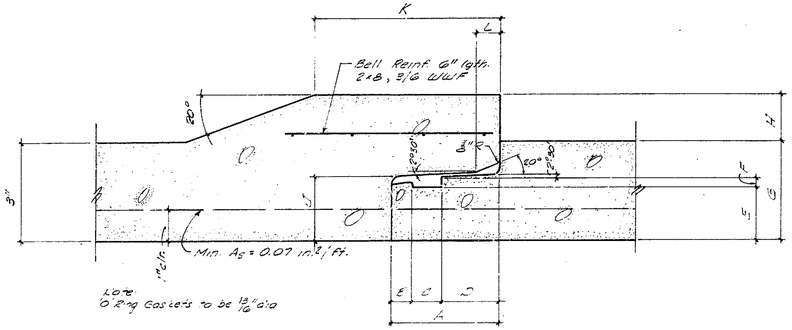

TYPICAL 'O' RING JOINT DETAIL ~ 15", 18" & 24" D.A. PIPE
Scale: Half Full

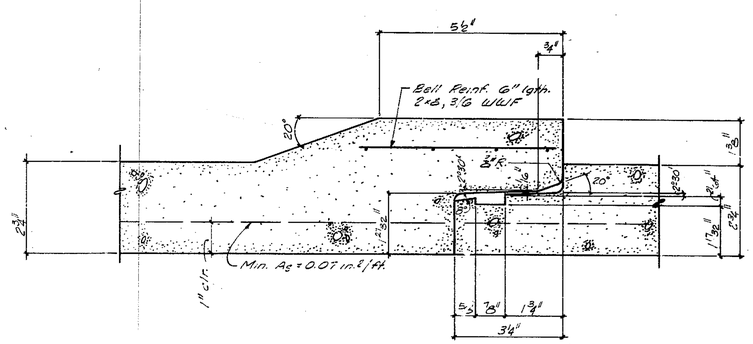

TYPICAL 'O' RING DETAIL ~ 21" DIA. PIPE
Scale: Half Full

REINFORCED CONCRETE PIPE NOTES:

1. Pipe shall be size, class, and wall thickness shown on plan and profiles.
2. All pipe shall conform to requirements of ASTM Designations C76.
3. Test "D" loads shall be performed on each size and class of reinforced concrete pipe. Cost of testing shall be included in the unit price bid for the item to which it applies. Manufacturer may elect quantity for which sampling will be the basis of acceptance or rejection.
4. The joints and gaskets shall conform to the requirements of ASTM Designation C443. Gaskets shall be installed and checked for proper placement in accordance with manufacturers recommendations.

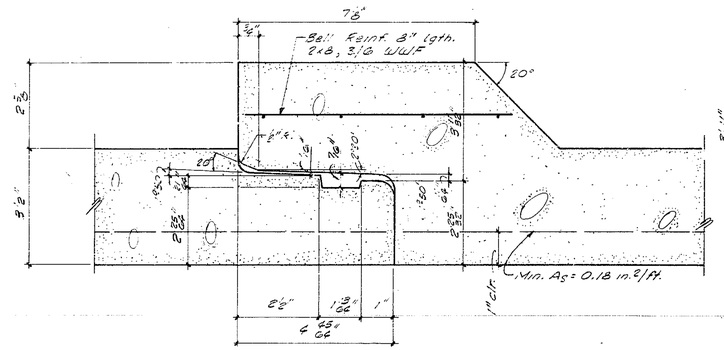

TYPICAL 'O' RING JOINT DETAIL ~ 30" DIA. PIPE
Scale: Half full

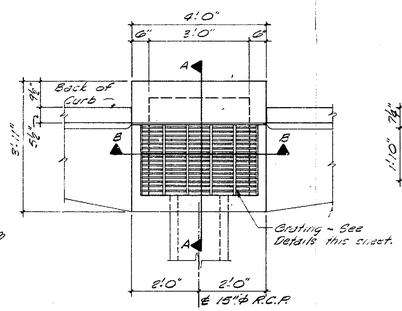

PLAN

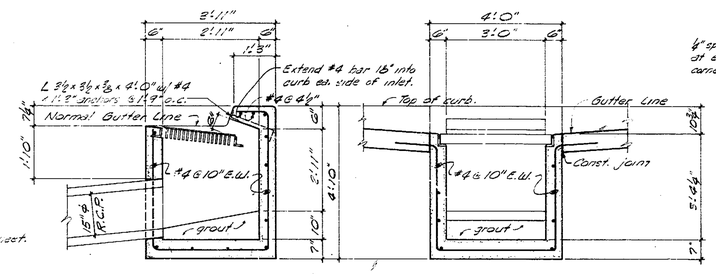

SECTION A-A.

SECTION B-B.

SINGLE "C" DROP INLET DETAILS.

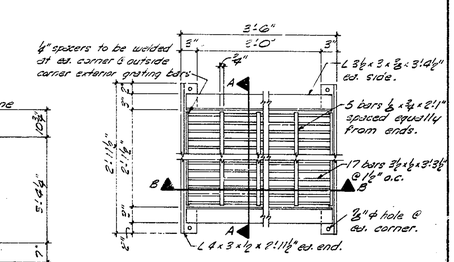

PLAN

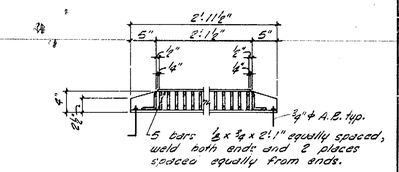

SECTION A-A.

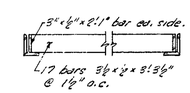

SECTION B-B.

GRATING DETAILS.

Note: "Hex" grating may be furnished subject to approval by Engineer.

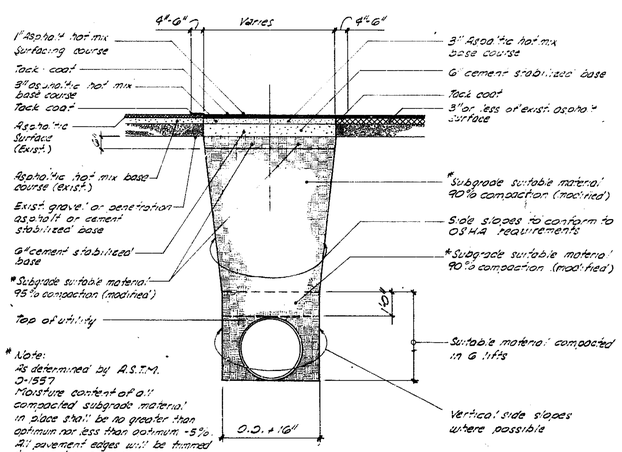

TYPICAL PAVING AND BACKFILL DETAIL
Scale: 3/8" = 1'0"

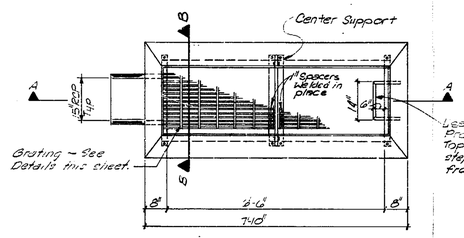

PLAN

Use Stimpson Manhole Step Model No. 6A. First step 18" from top of grate. 12" spacing of steps. Last step 18" max. from bottom.

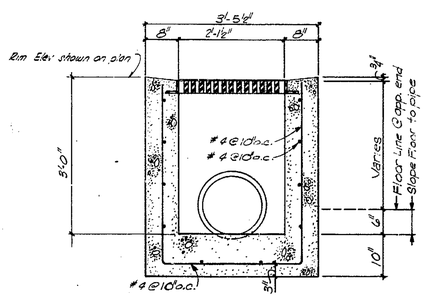

SECTION "B-B"

TYPICAL DETAILS ~ DOUBLE GRATE TYPE "D" INLET.

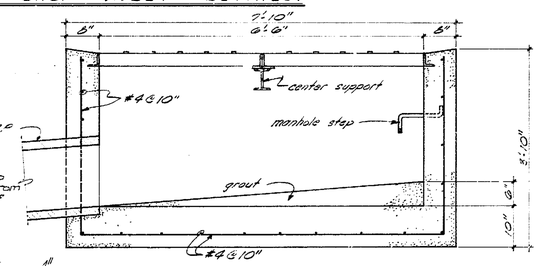

SECTION A-A.

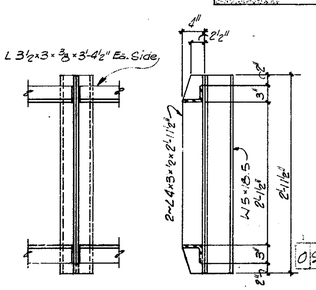

PLAN ELEVATION

CENTER SUPPORT
(Type "D" Inlet)

NOTES

1. Frame of grating and Center support to be welded construction.
2. After cleaning surface of scale, rust etc. Grating, Frame, and Center Support to be painted with one shop coat red lead. (AASHO M72, Type III or 307). Two finish coats aluminum paint (AASHO M69).

1	2	3	4	5	6	7	8	9	10	11	12	13	14	15	16	17	18	19	20	21	22	23	24	25	26	27	28	29	30
0	9		0	0	7		0	3	7	6				1	0	1	0												

AS CONSTRUCTED
DATE: JUNE 17, 1976.
SIGNED: [signature]

ALBUQUERQUE, NEW MEXICO

RESERVOIR DRAINLINES LOMAS - LINDA VISTA

RCP, TRENCH, PAVING & INLET DETAILS

MacCORNACK & BURNS
CONSULTING ENGINEERS, INC.
11... GIRARD BLVD., N.E.
ALBUQUERQUE, NEW MEXICO 87106

SCALE	DATE	DRAWN: B.A.	SHEET 3
AS SHOWN	APRIL 1975	CHECKED: F.B.	of 10

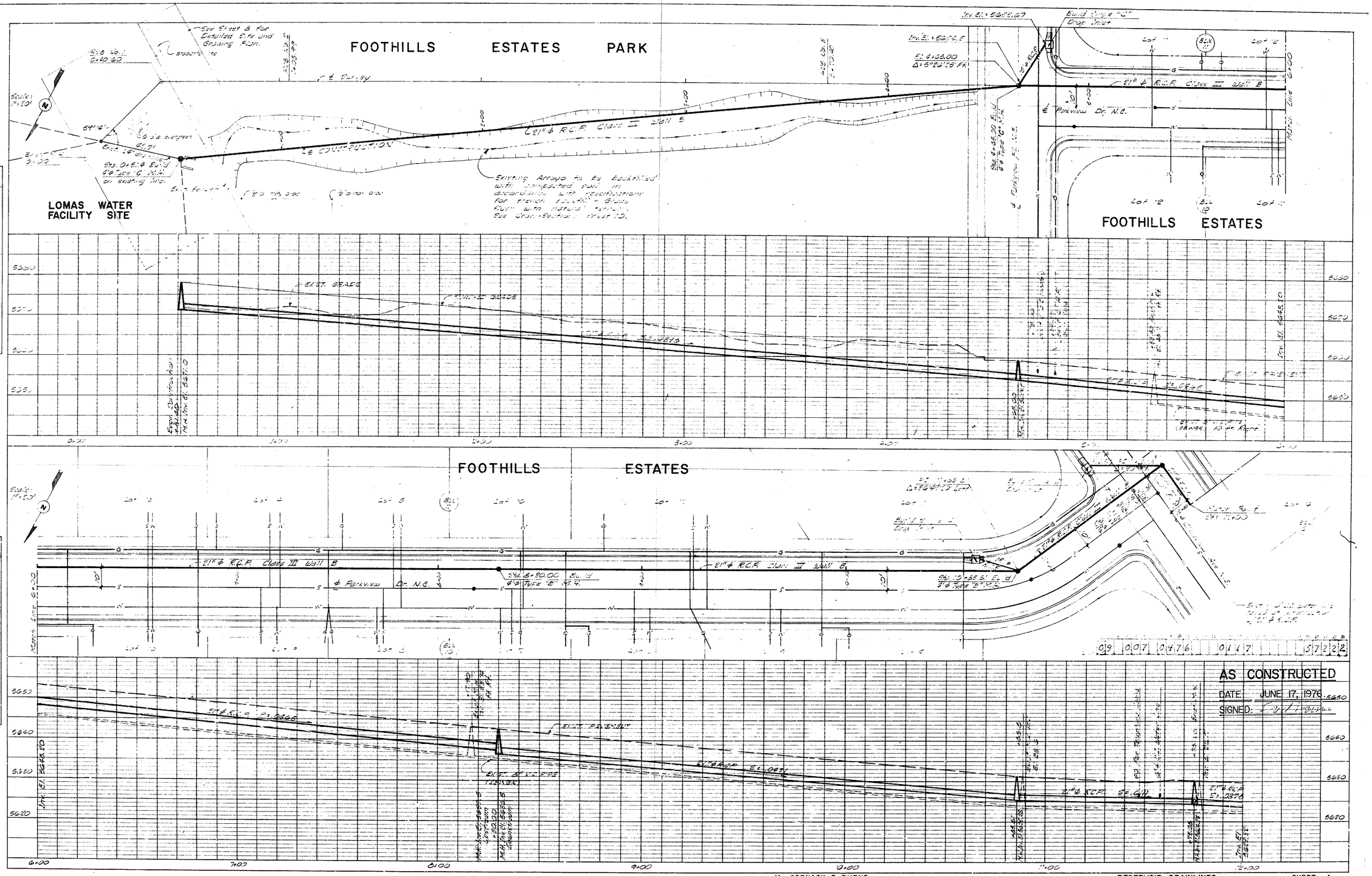

PLAN
SURVEYED
PLOTTED
NOTE BOOK
COMPUTATIONS CHECKED
R/W OF WAY CHECKED
No.
BY
DATE

PROFILE
SURVEYED
PLOTTED
NOTE BOOK
GRADES CHECKED
S. & V.'s NOTED
STRUCTURE DEVIATIONS CHECKED
No.
BY
DATE

HIGHWAY FEDERAL AID SHEET
PLATE 2-DOUBLE PLAN AND PROFILE-FULL LINE
TELEDYNE POST
PRINTED IN U.S.A.

MacCORNACK & BURNS
CONSULTING ENGINEERS, INC.

RESERVOIR DRAINLINES
LOMAS

SHEET 4
OF 10

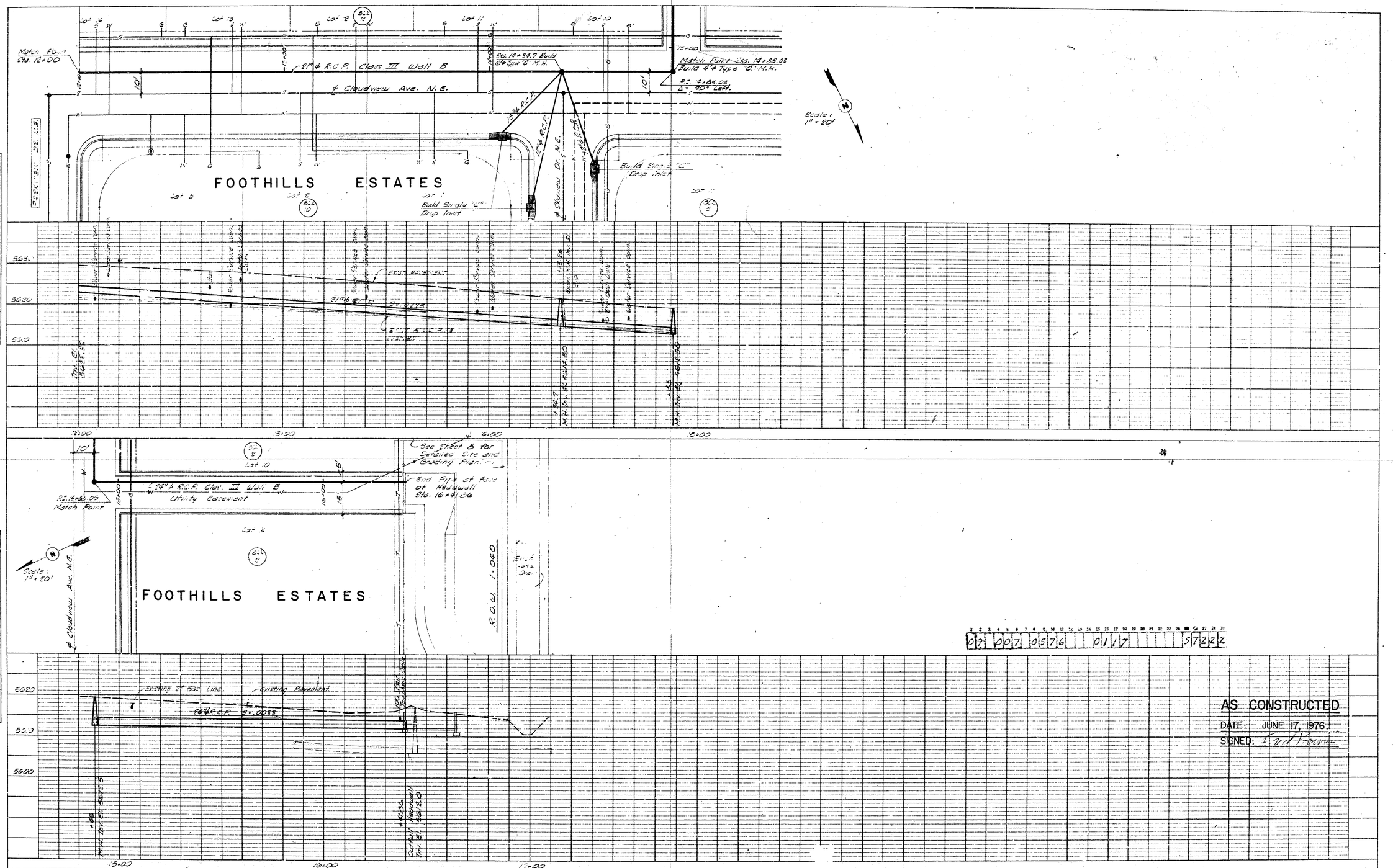
Match Point Sta. 12+00
21" ϕ R.C.P. Class III Wall B
℄ Claudview Ave. N.E.
Sta. 14+34.7 Build 6'ϕ Type "C" M.H.
Match Point Sta. 14+88.03
Build 6'ϕ Type "C" M.H.
Δ = 90° Left
Scale: 1" = 20'
FOOTHILLS ESTATES
Lot 5
Lot 6
Lot 7
Build Single "C" Drop Inlet
℄ Skyview Dr. N.E.
12" ϕ R.C.P.
Lot 10
Lot 11
Lot 12
Lot 13
Lot 14
Lot 15
Lot 16
Lot 17
Lot 18
Lot 19
Lot 20
Lot 21
Lot 22
Lot 23
Lot 24
Lot 25
Lot 26
Lot 27
Lot 28
Lot 29
Lot

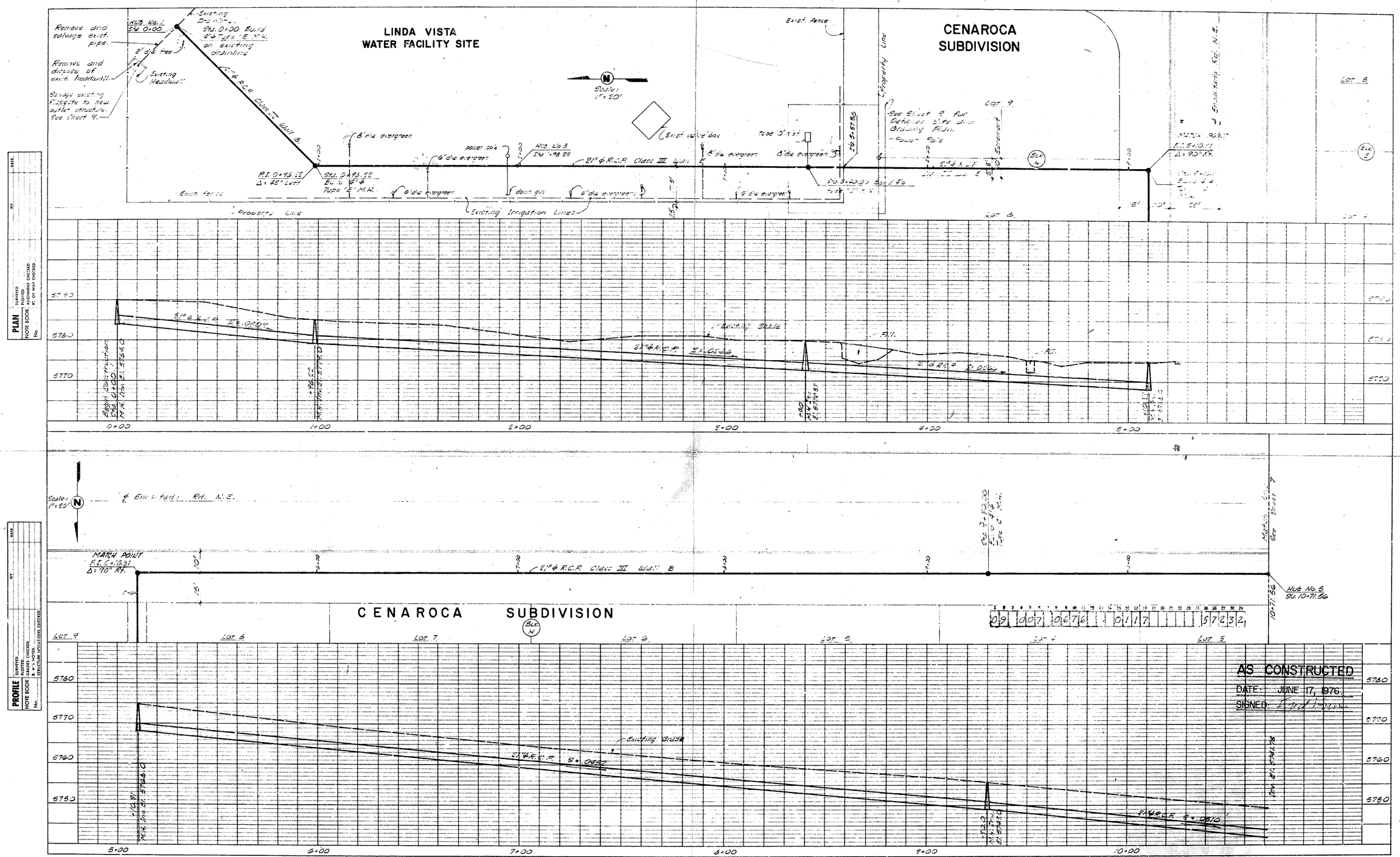

HIGHWAY FEDERAL AID SHEET
PLATE 2-DOUBLE PLAN AND PROFILE-FULL LINE
3M-TELEDYNE POST
PRINTED IN U.S.A.

MacCORNACK & BURNS
CONSULTING ENGINEERS, INC.

RESERVOIR DRAINLINES
LINDA VISTA

SHEET 6
OF 10

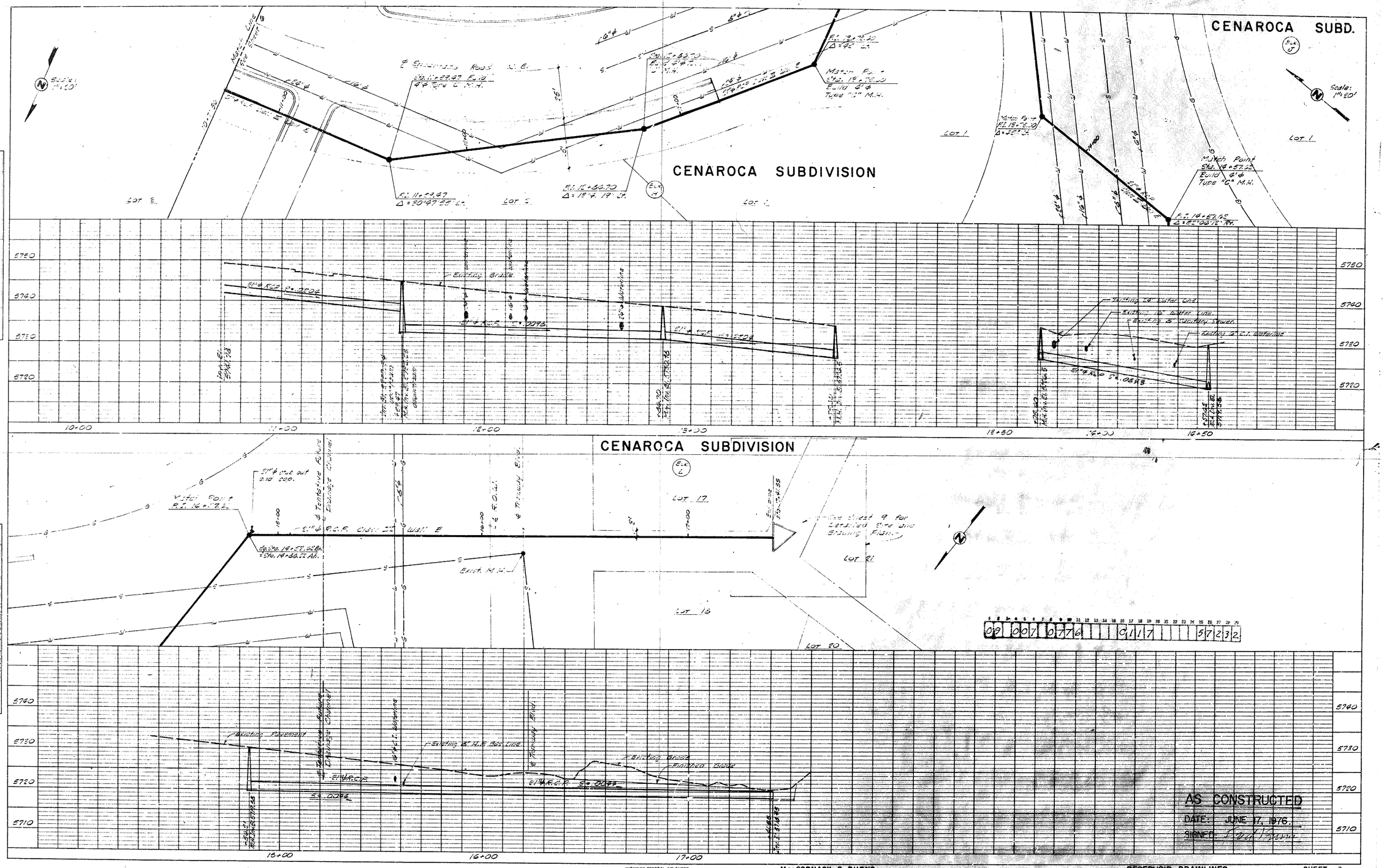

HIGHWAY FEDERAL AID SHEET
PLATE 2-DOUBLE PLAN AND PROFILE-FULL LINE
TELEDYNE POST
PRINTED IN U.S.A.

MacCORNACK & BURNS
CONSULTING ENGINEERS, INC.

RESERVOIR DRAINLINES
LINDA VISTA

SHEET 7
OF 10

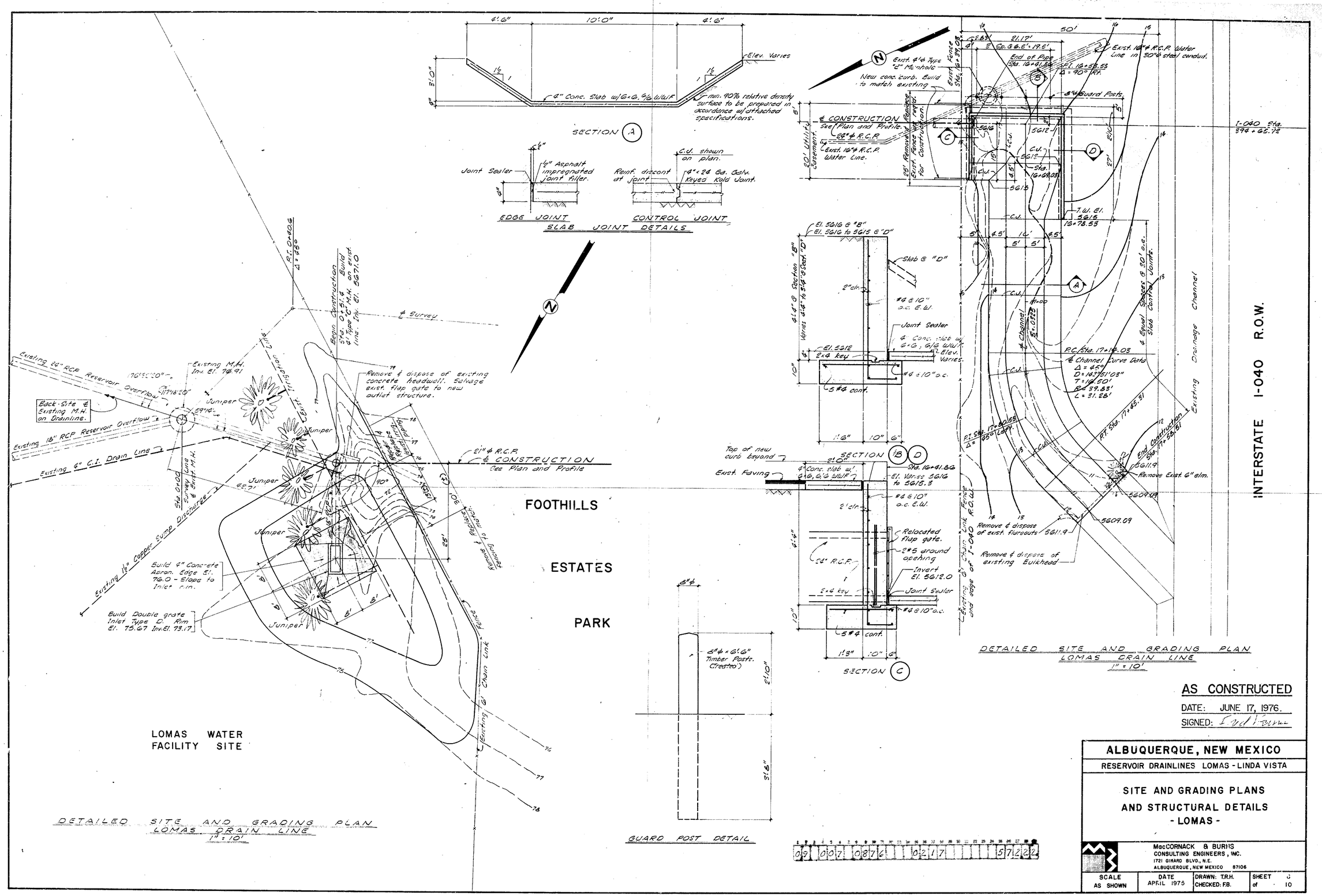

AS CONSTRUCTED

DATE: JUNE 17, 1976.

SIGNED: [illegible]

ALBUQUERQUE, NEW MEXICO

RESERVOIR DRAINLINES LOMAS - LINDA VISTA

SITE AND GRADING PLANS AND STRUCTURAL DETAILS - LOMAS -

MacCORNACK & BURNS CONSULTING ENGINEERS, INC.
1721 GIRARD BLVD., N.E.
ALBUQUERQUE, NEW MEXICO 87106

SCALE	DATE	DRAWN: T.R.H.	SHEET 3
AS SHOWN	APRIL 1975	CHECKED: F.B.	of 10

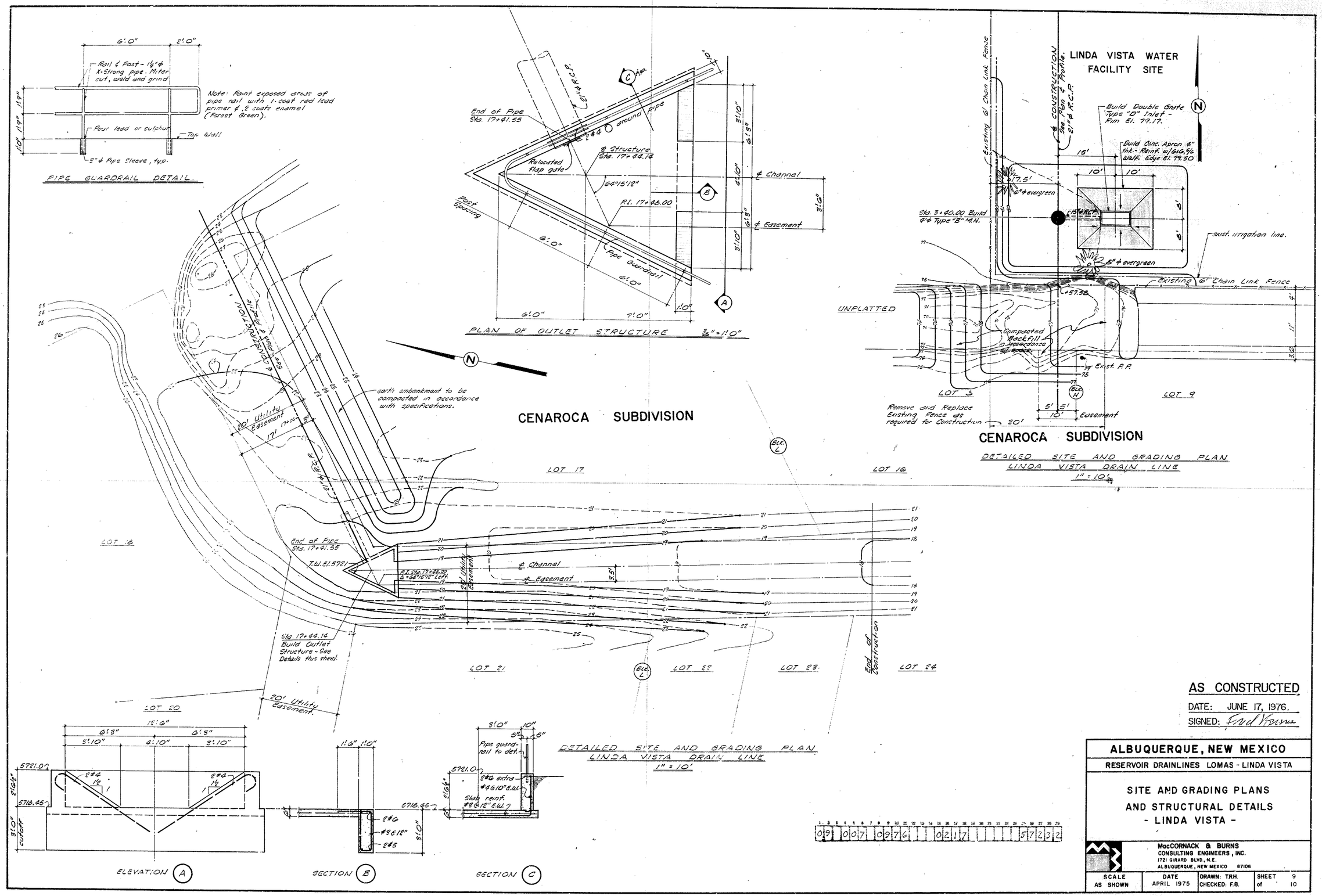

AS CONSTRUCTED

DATE: JUNE 17, 1976.

SIGNED: Fred Burns

ALBUQUERQUE, NEW MEXICO

RESERVOIR DRAINLINES LOMAS - LINDA VISTA

SITE AND GRADING PLANS AND STRUCTURAL DETAILS - LINDA VISTA -

MacCORNACK & BURNS
CONSULTING ENGINEERS, INC.
1721 GIRARD BLVD., N.E.
ALBUQUERQUE, NEW MEXICO 87106

SCALE	DATE	DRAWN: T.R.H.	SHEET 9
AS SHOWN	APRIL 1975	CHECKED: F.B.	of 10

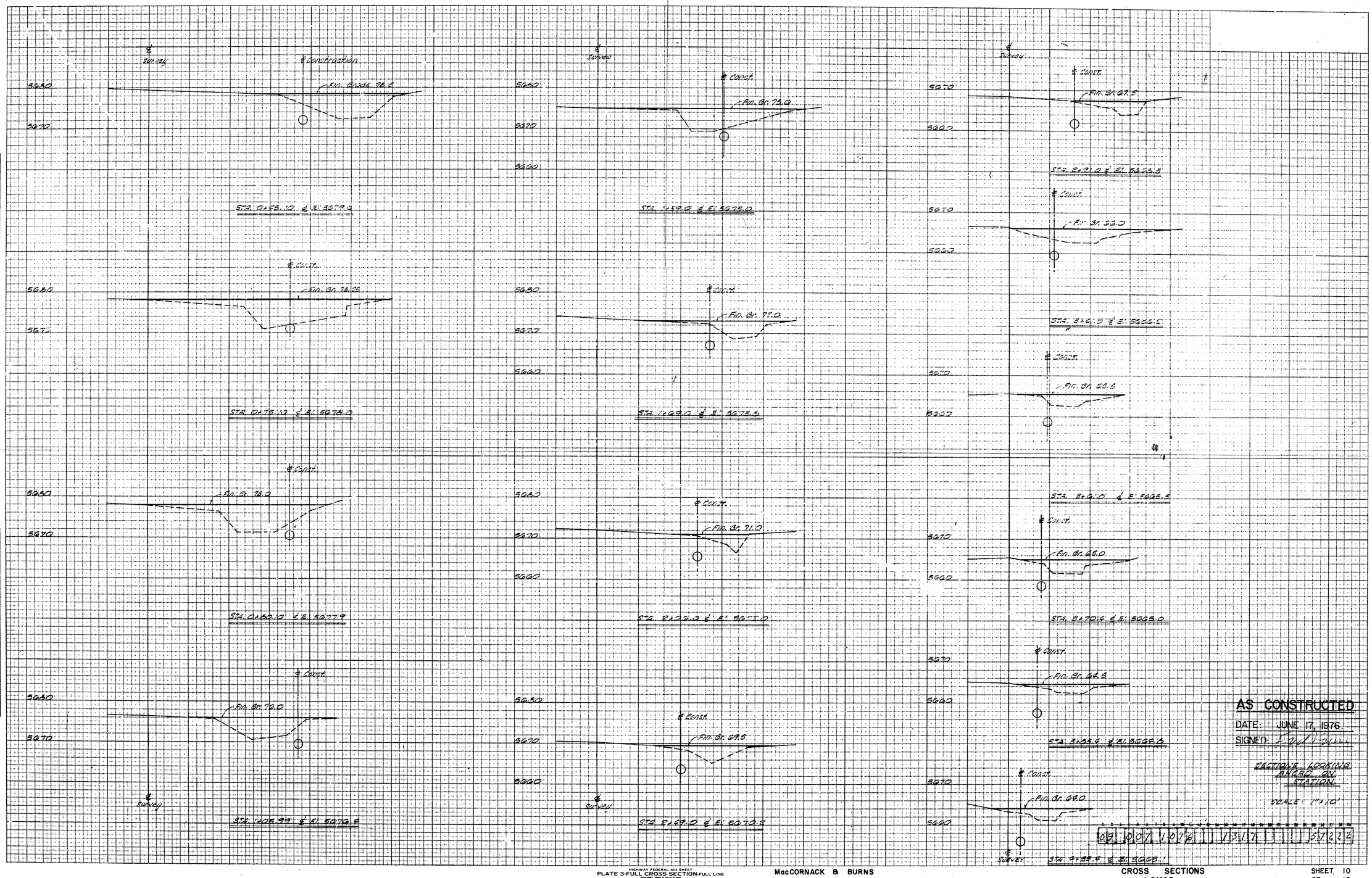

AS CONSTRUCTED
DATE: JUNE 17, 1976
SIGNED: [illegible]

SECTIONS LOOKING AHEAD ON STATION

SCALE: 1"=10'

09 | 0017 | 1976 | 13/17 | 37222

HIGHWAY FEDERAL AID SHEET
PLATE 3-FULL CROSS SECTION-FULL LINE
TELEDYNE POST
PRINTED IN U.S.A.

MacCORNACK & BURNS
CONSULTING ENGINEERS, INC.

CROSS SECTIONS
LOMAS

SHEET 10
OF 10