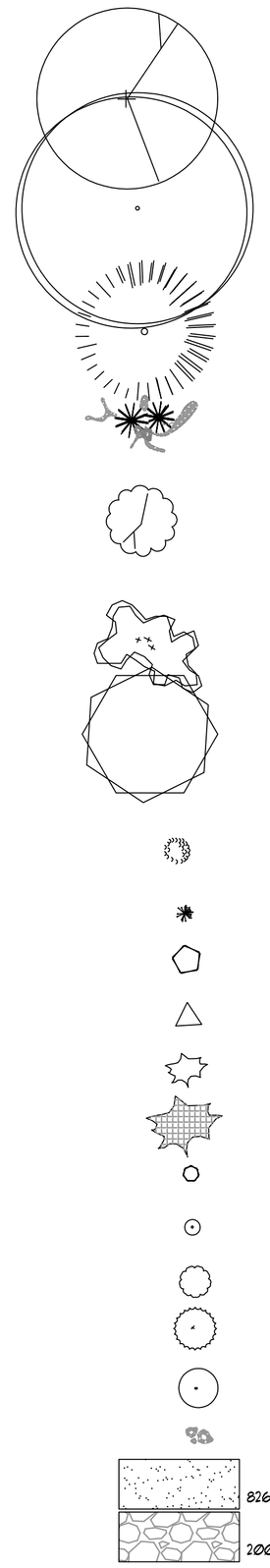

LANDSCAPE LEGEND

QTY	SIZE	COMMON/BOTANICAL				H2O USE
Trees						
4	2" cal	Chinese Pistache *Pistacia chinensis*	40x35	1225	4900	M+
2	2" cal	Honey Locust *Gleditsia triacanthos*	50x45	2025	4050	M
3	8-10'	Austrian Pine *Pinus nigra*	35x25	625	1875	M
2	4 - 6'	Palm Yucca *Yucca faxoniana*	15x6	36	72	M
12	15 Gal.	Oklahoma Redbud *Cercis reniformis*	15x12	144	1728	M
2	15 Gal	Crape Myrtle *Lagerstroemia indica*	12x15	225	450	M
4	15 Gal.	Chaste Tree *Vitex agnus castus*	20x25	625	2500	L
					15575	
Shrubs & Groundcovers						
24	5 Gal	India Hawthorne *Raphiolepis indica*	3x5	25	600	M
13	5 Gal	Feather Reed Grass *Calamogrostis arudinacea*	2.5x2	4	72	M
7	5 Gal	Wintergreen Barberry *Berberis julianae*	5x5	25	175	M
4	5 Gal	Butterfly Bush *Buddleia davidii*	5x5	25	100	M
16	5 Gal	Winter Jasmine *Jasminum nudiflorum*	4x12	144	2304	M
17	5 Gal	Buffalo Juniper *Juniperus sabina 'Buffalo'* Female Only	1x12	144	2448	M
4	1 Gal	Cherry Sage *Salvia greggii*	2x3	9	36	M
6	1 Gal	Blue Mist *Caryopteris x clandonensis*	3x3	9	54	M
3	1 Gal	Fern Bush *Chamaebatiaria millefolium*	5x6	36	108	L
5	1 Gal	Apache Plume *Fallugia paradoxa*	6x7	49	245	L
5	1 Gal	Chamisa *Chrysothamnus nauseosus*	5x7	25	125	L
					6267	
20	2-3cf	Boulders *To be placed at contractor discretion*				
8264		Landscape Gravel / Filter Fabric *3/4" Crushed Grey*				
200		Oversize Cobble Accents / Filter Fabric *2-4" Cobble*				

LANDSCAPE NOTES:
Landscape maintenance shall be the responsibility of the Property Owner. The Property Owner shall maintain street trees and shrubs in a living, healthy, and attractive condition.

Water management is the sole responsibility of the Property Owner. All landscaping will be in conformance with the City of Albuquerque Zoning Code. In general, water conservative, environmentally sound landscape principles will be followed in design and installation.

Landscape Gravel over Filter Fabric to a minimum depth of 3" shall be placed in all landscape areas which are not designated to receive native seed.

IRRIGATION NOTES:
Irrigation system maintenance and operation shall be the sole responsibility of the owner. It shall be the owners responsibility to ensure that fugitive water does not leave the site due to overwatering.

Irrigation shall be a complete underground system with Trees to receive 1 Netafim spiral (50' length) with 3 loops at a final radius of 4.5' from tree trunk, pinned in place. Netafim shall have emitters 12" o.c. with a flow of .6 gph. Shrubs to receive (2) 1.0 GPH Drip Emitters. Drip and Bubbler systems to be tied to 1/2" polypipe with flush caps at each end.

Run time per each shrub drip valve will be approximately 15 minutes per day. Tree drip valve shall run 1.5 hours, 3 times per week. Run time will be adjusted according to the season.

Point of connection for irrigation system is unknown at current time and will be coordinated in the field. Irrigation will be operated by automatic controller.

Location of controller to be field determined and power source for controller to be provided by others.

Irrigation maintenance shall be the responsibility of the Property Owner.

Water and Power source shall be the responsibility of the Developer/Builder.

LANDSCAPE CALCULATIONS

TOTAL LOT AREA (sf)	43560
TOTAL BUILDING AREA (sf)	5676
TOTAL LOT AREA (sf)	37884
LANDSCAPE REQUIREMENT	X .15
TOTAL LANDSCAPE REQUIRED (15%)	5682.6
TOTAL LANDSCAPE PROVIDED	8264
TOTAL LIVE GROUNDCOVER REQUIRED (75%)	6198
TOTAL LIVE GROUNDCOVER PROVIDED	6267

LEGAL DESCRIPTION

LOTS 31 AND 32, BLOCK 4
TRACT 2, UNIT 3
LOT AREA: 1 ACRE
NORTH ALBUQUERQUE ACRES
CITY OF ALBUQUERQUE ,
BERNALILLO COUNTY, NEW MEXICO
FEBRUARY, 2016

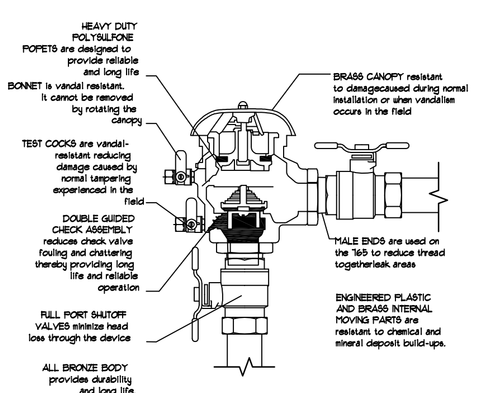

FEBCO MODEL 765
Pressure Vacuum Breaker
Features

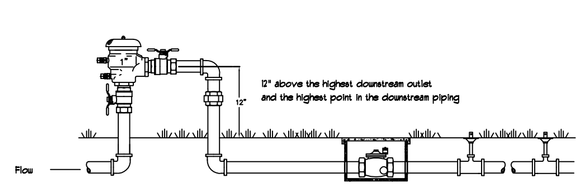

FEBCO MODEL 765
Pressure Vacuum Breaker
Outside Installation

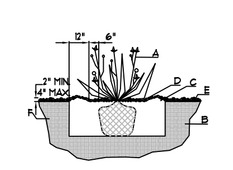

SHRUB PLANTING DETAIL
NTS

GENERAL NOTES:
1. THE OUTSIDE DIAMETER OF THE WATER RETENTION BASIN SHALL BE TWICE THE DIAMETER OF THE SHRUB PLANTING PIT.
CONSTRUCTION NOTES:
A. SHRUB.
B. BACKFILL WITH EXISTING SOIL.
C. EARTH BERM AROUND WATER RETENTION BASIN.
D. 3" DEPTH OF GRAVEL MULCH.
E. FINISH GRADE.
F. UNDISTURBED SOIL.

TREE PLANTING DETAIL
NTS

GENERAL NOTES:
1. ROOTBALL SHALL BE PLACED ON UNDISTURBED SOIL TO PREVENT TREE FROM SETTLING.
2. TOP OF ROOTCOLLAR INDICATED LEVEL AT WHICH TREE WAS GROWN AND DUGH THIS REPRESENTS THE LEVEL AT WHICH THE TREE SHOULD BE INSTALLED. THAT LEVEL MAY BE EXCEEDED BY ONLY A ONE INCH LAYER OF SOIL.
3. PRIOR TO BACKFILLING TREE, ALL WIRE, ROPE AND SYNTHETIC MATERIALS SHALL BE REMOVED FROM THE TREE AND THE PLANTING PIT.
4. PRIOR TO BACKFILLING ALL BURLAP SHALL BE CUT AWAY EXCEPT FROM BOTTOM OF THE ROOTBALL.
CONSTRUCTION NOTES:
A. TREE.
B. BACKFILL WITH EXISTING SOIL.
C. 3" DEPTH OF GRAVEL MULCH.
D. UNDISTURBED SOIL.

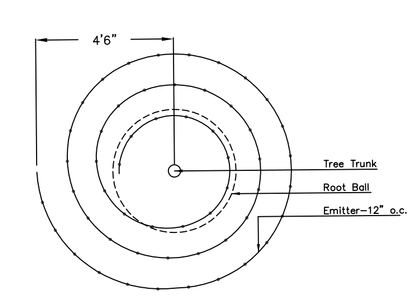

Netafim Spiral Detail

The Hilltop
7809 Edith N.E.
Albuquerque, NM 87113
Cell (505) 298-4589
Fax (505) 898-9630
Fax (505) 898-7137
danny@hilltoplandscaping.com

Landscape Architect

STATE OF NEW MEXICO
DANNY D. MITCHELL
239
REGISTERED LANDSCAPE ARCHITECT

February 23, 2016

Allergy Clinic
Albuquerque, NM

LANDSCAPE PLAN

The design contained herein remains the property of The Hilltop Landscape Architect and Contractors and are protected by copyright. Laws. This is an original design and must not be reproduced or copied in any form or manner without prior written permission. Plans have been paid for a job order placed.

The Hilltop
LANDSCAPE ARCHITECTS & CONTRACTORS

DRAWN BY
dm

REVISION #
1/5/2016
3/16/2016
11/17/2016

DATE
01/23/2016

SHEET #
LS-102