NOTE: ALL PROPOSED SIGNAGE SHALL COMPLY WITH THE SIGNAGE PROVISIONS OF THE C1 ZONE OF THE ZONING CODE SECTION 14-16-2-16.

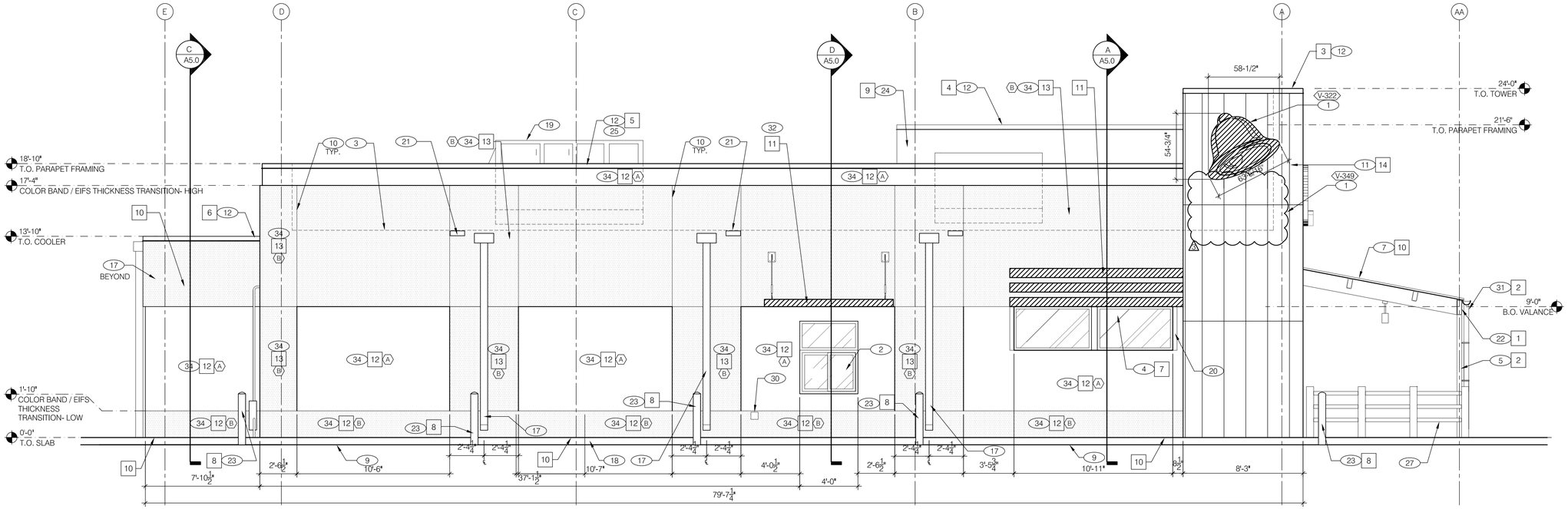

FACADE SF: 1513.17 SQ.FT SIGNAGE: 43.84 SQ. FT. MAXIMUM ALLOWED % OF FACADE: 2.9%

(NORTH) LEFT SIDE ELEVATION 1/4"=1'-0" A

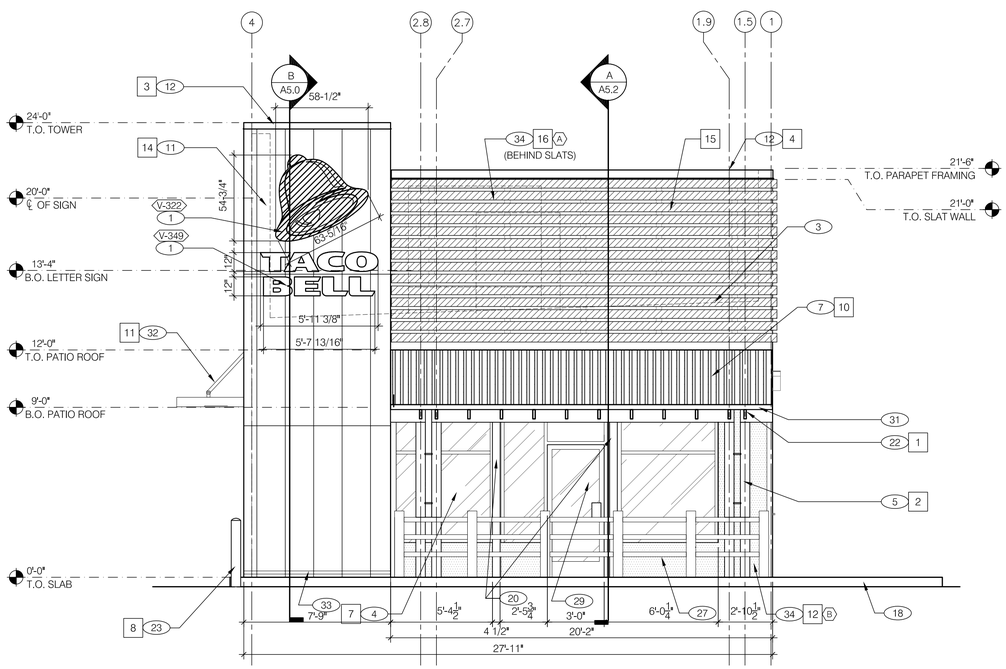

FACADE SF: 619.82 SQ.FT SIGNAGE: 43.84 SQ. FT. MAXIMUM ALLOWED % OF FACADE: 5.79%

(WEST) FRONT ELEVATION 1/4" = 1'-0" C

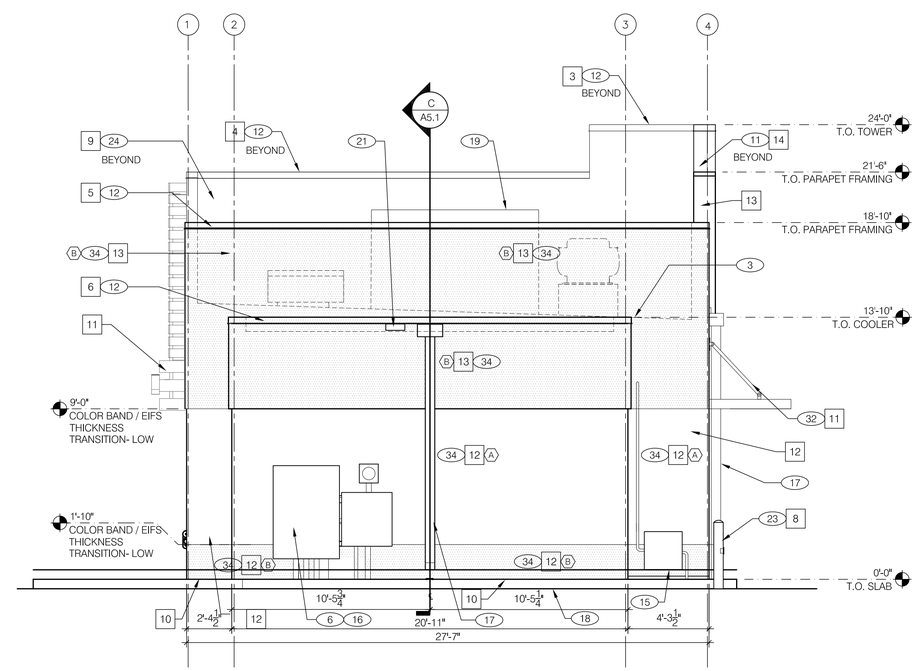

(EAST) REAR ELEVATION 1/4" = 1'-0" B

MARK D. MCCLUGGAGE AIA, CCS
1525 E. Douglas Wichita, KS 67211
Tel: (316) 265-5646
Fax: (316) 265-5646
www.gmrv.com

STATE OF NEW MEXICO
MARK D. McCLUGGAGE
NO. 3650
12-13-2016
REGISTERED ARCHITECT

12134.240

1	2016.11.11 - REVISION 1
2	2016.11.29 - REVISION 2
3	2016.12.13 - SIGNS
	DRB 1ST SUB 03.02.17

CONTRACT DATE:	JUNE 07, 2016
BUILDING TYPE:	EXP. LITE MED40
PLAN VERSION:	SEPTEMBER 2015
SITE NUMBER:	--
STORE NUMBER:	--

TACO BELL

UNSER BLVD NW & LADERA
ALBUQUERQUE, NM 87114

EXPLORER LITE
MEDIUM 40

EXTERIOR ELEVATIONS

A4.1