OFFICIAL NOTICE OF DECISION

CITY OF ALBUQUERQUE
PLANNING DEPARTMENT
DEVELOPMENT REVIEW BOARD

November 3, 2010

Project# 1003417
10DRB-70299 EXT OF SIA FOR TEMP DEFR SDWK CONST

MARK GOODWIN AND ASSOCIATES PA agent(s) for QUIVERA 2, LLC request(s) the above action(s) for all or a portion of **MOUNTAIN TRAIL,** zoned R-D, located on GLENDALE NE BETWEEN WYOMING NE AND BARSTOW NE (B-19)

At the November 3, 2010 Development Review Board meeting, a 2 year extension to the agreement for the deferral of sidewalks was approved. Please provide an exhibit to the Design Review Committee indicating the lot number/addresses where sidwalks are still deferred.

If you wish to appeal this decision, you must do so by November 18, 2010, in the manner described below.

> Appeal is to the Land Use Hearing Officer. Any person aggrieved with any determination of the Development Review Board may file an appeal on the Planning Department form, to the Planning Department, within 15 days of the Development Review Board's decision. The date the determination in question is issued is not included in the 15-day period for filing an appeal.

If the fifteenth day falls on a Saturday, Sunday or holiday as listed in the Merit System Ordinance, the next working day is considered as the deadline for filing the appeal. Such appeal shall be heard within 60 days of its filing.

You will receive notice if any other person files an appeal. Successful applicants are reminded that other requirements of the City must be complied with, even after approval of the referenced application(s).

Jack Cloud, AICP, DRB Chair

Cc: Tierra West LLC – 5571 Midway Park Place NE – Albuquerque, NM 87109
Cc: Wal-Mart Stores East LP – 2001 SE 10th Street- Bentonville, AR 72716
Marilyn Maldonado
file

2. **Project# 1000762**
10DRB-70281 MAJOR – 2 YEAR EXTENSION OF SUBDIVISION IMPROVEMENTS AGREEMENT (2YR SIA)

BOHANNAN HUSTON INC agent(s) for FIRST BAPTIST CHURCH OF ALBUQUERQUE request(s) the referenced/ above action(s) for all or a portion of **TRACT I, FOUNTAIN HILLS PLAZA SUBDIVISION,** zoned SU-1 FOR IP USES W/ EXCEPTIONS, and located on the north side of PASEO DEL NORTE NW between RICHLAND HILLS RD NW and RANCH RD NW containing approximately 13.8994 acre(s). (C-12) *[Deferred from 10/27/10]* **A ONE YEAR EXTENSION OF THE SUBDIVISION IMPROVEMENT AGREEMENT (SIA) WAS APPROVED.**

MINOR PLATS, FINAL (MAJOR) PLATS, AMENDED PLATS AND PLANS

3. **Project# 1003417**
10DRB-70299 EXT OF SIA FOR TEMP DEFR SDWK CONST

MARK GOODWIN AND ASSOCIATES PA agent(s) for QUIVERA 2, LLC request(s) the above action(s) for all or a portion of **MOUNTAIN TRAIL,** zoned R-D, located on GLENDALE NE BETWEEN WYOMING NE AND BARSTOW NE (B-19) **A TWO YEAR EXTENSION TO THE AGREEMENT FOR THE DEFERRAL OF SIDEWALKS WAS APPROVED.**

NO ACTION IS TAKEN ON THESE CASES:
APPLICANT - AGENT IS REQUIRED TO BE AT THE MEETING

4. **Project# 1008565**
10DRB-70302 SKETCH PLAT REVIEW AND COMMENT

THE SURVEY OFFICE agent(s) for ANTHONY LOPEZ request(s) the above action(s) for all or a portion of Lot(s) 22-24, Block(s) 16, Tract(s) , **MESA VERDE,** zoned R-2, located on PENNSYLVANIA NE BETWEEN COPPER NE AND CHICO NE containing approximately 0.3248 acre(s). (K-19)**THE ABOVE ITEM WAS REVIEWED AND COMMENTS WERE GIVEN.**

5. **Project# 1001568**
10DRB-70303 SKETCH PLAT REVIEW AND COMMENT

ED HADDAWAY request(s) the above action(s) for all or a portion of Lot(s)C **LANDS OF HADDAWAY,** zoned RA2, R1, located on containing approximately 1.55 acre(s). (H-12, H-13) **THE ABOVE ITEM WAS REVIEWED AND COMMENTS WERE GIVEN.**

6. Other Matters: NONE.

7. Approval of the Development Review Board Minutes for September 22nd, 29th, October 6th, 13th. 2010

ADJOURNED: 9:30

HEARING DATE: 11-3-10 (ESIA)

OFFICIAL NOTICE OF DECISION

CITY OF ALBUQUERQUE
PLANNING DEPARTMENT
DEVELOPMENT REVIEW BOARD

November 19, 2008

Project# 1003417
08DRB-70477 EXT OF SIA FOR TEMP DEFR SDWK CONST

MARK GOODWIN AND ASSOCIATES PA agent(s) for QUIVERA 2, LLC request(s) the above action(s) for all or a portion of **MOUNTAIN TRAILS** zoned R-D, located on GLENDALE AVE NE BETWEEN WYOMING AND BARSTOW (B-19)

At the November 19, 2008 Development Review Board meeting, a two year extension to the four-year agreement for the deferral of sidewalks was approved.

Jack Cloud, AICP, DRB Chair

Cc: Mark Goodwin & Associates, PA – P.O. Box 90606 – Albuquerque, NM 87199
Cc: Quivera 2, LLC – 100 Gold SW, Ste 209 – Albuquerque, NM 87120
Marilyn Maldonado
File

MINOR PLATS, FINAL (MAJOR) PLATS, AMENDED PLATS AND PLANS

3. **Project# 1003417**
08DRB-70477 EXT OF SIA FOR TEMP DEFR SDWK CONST

MARK GOODWIN AND ASSOCIATES PA agent(s) for QUIVERA 2, LLC request(s) the above action(s) for all or a portion of **MOUNTAIN TRAILS** zoned R-D, located on GLENDALE AVE NE BETWEEN WYOMING AND BARSTOW (B-19) **A ONE YEAR EXTENSION TO THE 4-YEAR AGREEMENT FOR THE DEFERRAL OF SIDEWALKS WAS APPROVED.**

4. **Project# 1005536**
08DRB-70483 EXT OF MAJOR PRELIMINARY PLAT

ISAACSON & ARFMAN agent(s) for BCR CONSTRUCTION request(s) the above action(s) for all or a portion of Lot(s) 57-59, **ROSSITER ADDITON (TO BE KNOWN 12TH STREET VILLAS),** zoned R2, located on 12TH ST NW BETWEEN CANDELARIA RD NW AND GRIEGOS RD NW containing approximately 1.0522 acre(s). (G-14) **A ONE-YEAR EXTENSION OF THE PRELIMINARY PLAT WAS APPROVED.**

5. **Project# 1007490**
08DRB-70466 MINOR - PRELIMINARY/ FINAL PLAT APPROVAL

CONSENSUS PLANNING agent(s) for C&S EQUITIES LLC request(s) the above action(s) for all or a portion of Tract(s) 3B, **LANDS OF IHS ACQUISITION NO. 120, INC.,** zoned SU-2 FOR HOSPITAL AND MEDICAL, located on HORIZON BLVD NW BETWEEN NORTH DIVISION CHANNEL AND BALLOON FIESTA PARK NW containing approximately 18.7 acre(s). (B-17 & C-17) *[Deferred from 11/5/08]***DEFERRED TO 12/3/08 AT THE AGENT'S REQUEST.**

6. **Project# 1003604**
08DRB-70480 MINOR - PRELIMINARY/ FINAL PLAT APPROVAL

ALPHA PROFESSIONAL SURVEYING INC agent(s) for ANTHONY MONTOYA request(s) the above action(s) for all or a portion of Tract(s) PARCEL A, **MIRA MESA ESTATES,** zoned R-2, located on TELSTAR LOOP NW BETWEEN 68TH ST NW AND GLENRIO RD NW containing approximately .2353 acre(s). (J-10) **THE PRELIMINARY/FINAL PLAT WAS APPROVED WITH FINAL SIGN OFF DELEGATED TO PLANNING FOR AMAFCA SIGNATURE AND TO RECORD.**

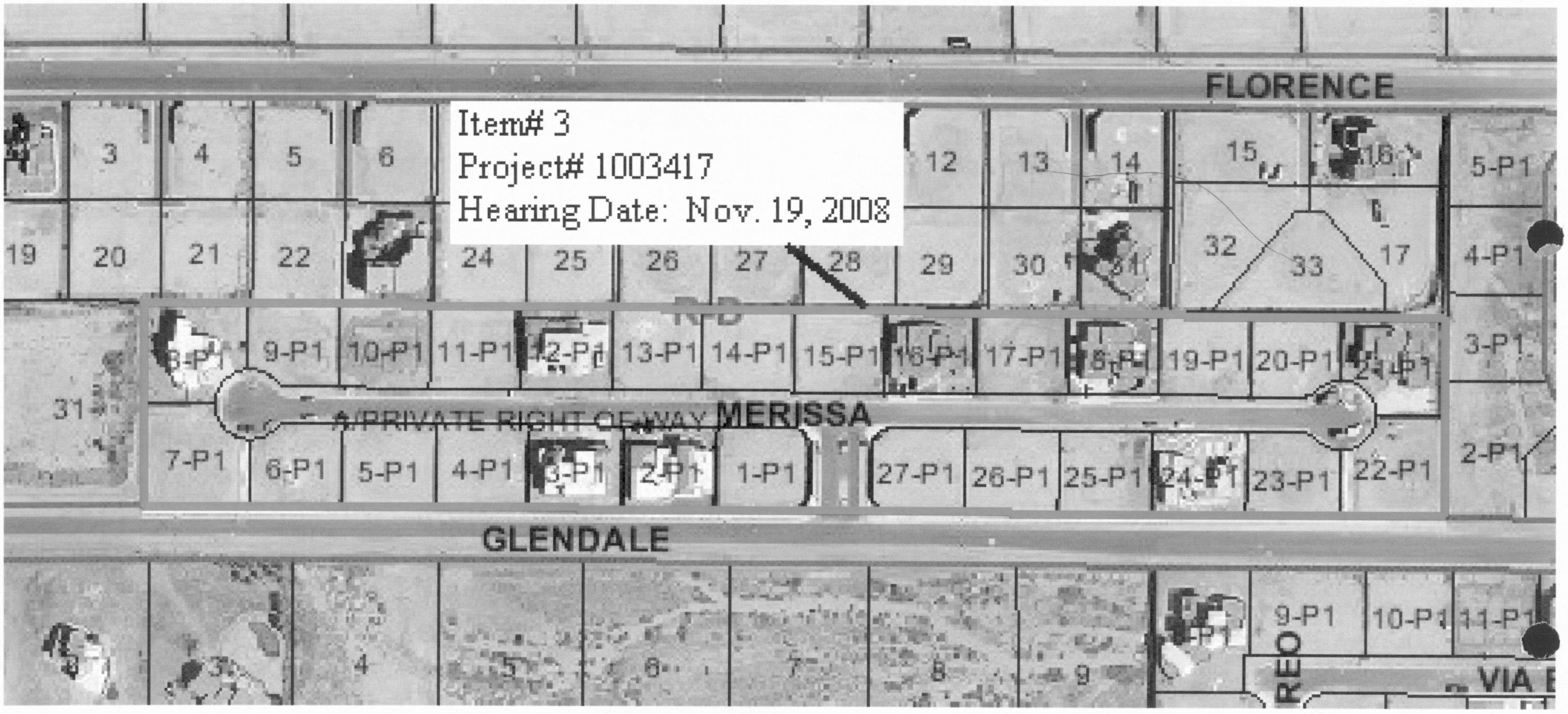
Item# 3
Project# 1003417
Hearing Date: Nov. 19, 2008
FLORENCE
GLENDALE
MERISSA
A PRIVATE RIGHT OF WAY
VIA

#12 Complete 2-28-05 BL.

DRB CASE ACTION LOG (FINAL PLAT)

REVISED 2/5/04

This sheet must accompany your plat or site plan to obtain delegated signatures. Return sheet with site plan/plat once comments are addressed.

DRB Application No.: **05DRB-00237 (FP)** Project # **100** 3417

Project Name: **MOUNTAIN TRAIL SUBD. UN 3**

Agent: Mark Goodwin & Associates Phone No.: 828-2200

Project Number 100341 7

Your request for (**SDP for SUB**), (**SDP for BP**), (**FINAL PLATS**), (**MASTER DEVELOP. PLAN**), was approved on 2/23/05 by the DRB with delegation of signature(s) to the following departments.
OUTSTANDING SIGNATURES COMMENTS TO BE ADDRESSED

- ☐ TRANSPORTATION:
- ☐ UTILITIES:
- ☐ CITY ENGINEER / AMAFCA:
- ☒ PARKS / CIP: Cash in lieu ok CS
- ☐ PLANNING (Last to sign):
- ☐ **Planning must record this plat. Please submit the following items:**
  - -The original plat and a mylar copy for the County Clerk.
  - -Tax certificate from the County Treasurer.
  - -Recording fee (checks payable to the County Clerk). RECORDED DATE: 2-28-05
  - -Tax printout from the County Assessor.
- ☐ **Include 3 copies of the approved site plan along with the originals.**
- ☐ **County Treasurer's signature must be obtained prior to the recording of the plat with the County Clerk.**
- ☐ **Property Management's signature must be obtained prior to Planning Department's signature.**
- ~~☐ **AGIS DXF File approval required.**~~
- ☐ **Copy of recorded plat for Planning.**

P/U 2/28/05

#12

DRB CASE ACTION LOG (FINAL PLAT)

REVISED 2/5/04

This sheet must accompany your plat or site plan to obtain delegated signatures. Return sheet with site plan/plat once comments are addressed.

DRB Application No.: **05DRB-00237 (FP)** Project # **100** 3417

Project Name: **MOUNTAIN TRAIL SUBD. UN 3**

Agent: Mark Goodwin & Associates Phone No.: 828-2200

Your request for (**SDP for SUB**), (**SDP for BP**), (**FINAL PLATS**), (**MASTER DEVELOP. PLAN**), was approved on 2/23/05 by the DRB with delegation of signature(s) to the following departments

OUTSTANDING SIGNATURES COMMENTS TO BE ADDRESSED

- ☐ TRANSPORTATION:
- ☐ UTILITIES:
- ☐ CITY ENGINEER / AMAFCA:
- ☒ PARKS / CIP: Cash in lieu
- ☐ PLANNING (Last to sign):
- ☐ **Planning must record this plat. Please submit the following items:**
  - -The original plat and a mylar copy for the County Clerk.
  - -Tax certificate from the County Treasurer.
  - -Recording fee (checks payable to the County Clerk). RECORDED DATE: _____
  - -Tax printout from the County Assessor.
  - ☐ **Include 3 copies of the approved site plan along with the originals.**
  - ☐ **County Treasurer's signature must be obtained prior to the recording of the plat with the County Clerk.**
  - ☐ **Property Management's signature must be obtained prior to Planning Department's signature.**
  - ~~☐ **AGIS DXF File approval required.**~~
  - ☐ **Copy of recorded plat for Planning.**

Project Number 100341 7

OFFICIAL NOTICE OF DECISION

CITY OF ALBUQUERQUE
PLANNING DEPARTMENT
DEVELOPMENT REVIEW BOARD

February 23, 2005

12. Project # 1003417
05DRB-00238 Minor-Amnd Prelim Plat Approval
05DRB-00237 Major-Final Plat Approval

MARK GOODWIN & ASSOCIATES PA agent(s) for ALPHA EQUITIES LLC request(s) the above action(s) for all or a portion of Lot(s) 22-30, Block(s) 11, Tract(s) 1, NORTH ALBUQUERQUE ACRES (to be known as **MOUNTAIN TRAIL SUBDIVISION, UNIT 3**, zoned R-D, located on GLENDALE AVE NE, between WYOMING BLVD NE and BARSTOW ST NE containing approximately 10 acre(s). [REF: 04DRB00671, 04DRB01056, 04DRB01057, 04DRB01058, 04DRB01232] (B-19)

At the February 23, 2005, Development Review Board meeting, the amended preliminary plat was approved. The amended infrastructure list dated 2/23/05 was approved. The final plat was approved with final sign off delegated to Parks for cash-in-lieu.

Sheran Matson, AICP, DRB Chair

Cc:Alpha Equities LLC, P.O. Box 10005, 87184
Mark Goodwin & Associates PA, P.O. Box 90606, 87199
Marilyn Maldonado, Planning Department, 4th Floor, Plaza del Sol Bldg.
File

DEVELOPMENT REVIEW BOARD
ACTION SHEET

Plaza del Sol Hearing Room, Basement, Plaza del Sol Building

February 23, 2005 9:00 a.m.

MEMBERS:

Sheran Matson, AICP, DRB Chair
Claire Senova, Administrative Assistant

Wilfred Gallegos, Transportation Development
Brad Bingham, Alternate City Engineer

Roger Green, Utility Development
Christina Sandoval, Parks & Recreation

****

NOTE: UNLESS ANNOUNCED DURING THE MEETING, THE DEVELOPMENT REVIEW BOARD WILL NOT TAKE A LUNCH BREAK.

NOTE: INDIVIDUALS WITH DISABILITIES WHO NEED SPECIAL ASSISTANCE TO PARTICIPATE AT THIS MEETING SHOULD CONTACT CLAIRE SENOVA, PLANNING DEPARTMENT, AT 924-3946. HEARING IMPAIRED USERS MAY CONTACT HER VIA THE NEW MEXICO RELAY NETWORK BY CALLING TOLL-FREE:1-800-659-8331.

NOTE: REQUESTS FOR DEFERRAL OF CASES WILL BE DISCUSSED BY THE BOARD AND THE APPLICANT AND/OR AGENT AT THE BEGINNING OF THE AGENDA. BOTH PARTIES MUST AGREE UPON THE DATE OF DEFERRAL. IF THE APPLICANT/AGENT IS NOT PRESENT, THE ADMINISTRATIVE ASSISTANT MUST RECEIVE A LETTER, PRIOR TO THE HEARING DATE, REQUESTING A SPECIFIC DEFERRAL DATE. THE BOARD WILL DISCUSS AND MAKE A DECISION AT THE HEARING. THE APPLICANT/AGENT WILL THEN BE INFORMED OF THE DEFERRAL DATE AND REASON.

A. Call to Order: 9:00 A.M. Adjourned: 1:30 P.M.
B. Changes and/or Additions to the Agenda
C. New or Old Business

CASES WHICH REQUIRE PUBLIC NOTIFICATION
MAJOR SUBDIVISIONS, VACATIONS, SIA EXTENSIONS AND SITE DEVELOPMENT PLANS

1. **Project # 1001085**
05DRB-00133 Major-Vacation of Public Easements

ANTHONY E. DECK request(s) the above action(s) for all or a portion of Lot(s) 16 and 17, Block(s) B, Unit(s) 1, **ROSEWOOD SUBDIVISION,** zoned R-D, located on BLOSSOMWOOD PL NW between HANOVER NW and I-40 NW containing approximately 1 acre(s). [REF: 03DRB00372, 01DRB00261] (J-10) **VACATION WAS APPROVED AS SHOWN ON EXHIBIT B IN THE PLANNING FILE.**

2. **Project # 1003905**
05DRB-00134 Major-Vacation of Public Easements

ANTHONY E. DECK request(s) the above action(s) for all or a portion of Lot(s) 31 and 32, Block(s) B, Unit(s) 1, **SANDALWOOD SUBDIVISION,** zoned R-D, located on ALLWOOD NW NW, between HANOVER NW and I-40 NW containing approximately 1 acre(s). [REF: DRB-95-287, SV-96-55, S-96-6] (J-9) **VACATION WAS APPROVED AS SHOWN ON EXHIBIT B IN THE PLANNING FILE.**

3. **Project # 1003713**
05DRB-00147 Major-Vacation of Pub Right-of-Way
05DRB-00148 Minor-Prelim&Final Plat Approval
05DRB-00149 Minor-Sidewalk Variance

FAMILY HOUSING DEVELOPMENT CORPORATION agent(s) for CITY OF ALBUQUERQUE METROPOLITAN REDEVELOPMENT AGENCY request(s) the above action(s) for all or a portion of Lot(s) 1-7, Block(s) 19, PEREA ADDITION, AND LOTS 3A, 4 & 5, WEST END ADDITION (to be known as **BELL TRADING POST LOFTS, TRACT A**), zoned SU-2, SU-1, located on CENTRAL AVE NW, between LAGUNA RD NW and 15TH ST NW containing approximately 1 acre(s). [REF: Z-85-9, Z-68-134] (J-13) **VACATION WAS APPROVED AS SHOWN ON EXHIBIT B IN THE PLANNING FILE. WITH THE SIGNING OF THE INFRASTRUCTURE LIST DATED 2/23/05 THE PRELIMINARY PLAT WAS APPROVED. FINAL PLAT WAS INDEFINITELY DEFERRED FOR THE SIA. A SIDEWALK DESIGN VARIANCE WAS APPROVED AS SHOWN ON EXHIBIT C IN THE PLANNING FILE.**

05DRB-00303 Minor-SiteDev Plan BldPermit

FAMILY HOUSING DEVELOPMENT CORPORATION agent(s) for CITY OF ALBUQUERQUE METROPOLITAN REDEVELOPMENT AGENCY request(s) the above action(s) for all or a portion of Lot(s) 1-7, Block(s) 19, PEREA ADDITION, AND LOTS 3A, 4 & 5, WEST END ADDITION (to be known as **BELL TRADING POST LOFTS, TRACT A**), zoned SU-2, SU-1, located on CENTRAL AVE NW, between LAGUNA RD NW and 15TH ST NW containing approximately 1 acre(s). [REF: Z-85-9, Z-68-134] **[RUSSELL BRITO, EPC CASE PLANNER FOR MARY PISCITELLI]** (J-13) **SITE PLAN FOR BUILDING PERMIT WAS APPROVED WITH FINAL SIGN OFF DELEGATED TO CITY ENGINEER FOR SIA AND PLANNING FOR MINOR CORRECTIONS.**

4. **Project # 1003703**
05DRB-00150 Major-Preliminary Plat Approval
05DRB-00151 Major-Vacation of Pub Right-of-Way
05DRB-00153 Minor-Temp Defer SDWK

THE GROUP agent(s) for ADIL RIZVI request(s) the above action(s) for all or a portion of Lot(s) 13, 14, 15,16,19 and 20, Block(s) 2, Tract(s) 3, Unit(s) 3 NOR ESTE, NORTH ALBUQUERQUE ACRES, (to be known as **EAGLE'S VIEW ESTATES)** zoned R-D, located on VENTURA NE, between EAGLE ROCK NE and OAKLAND NE containing approximately 2 acre(s). [REF: 04DRB-01533] *[Deferred from 2/23/05]* (C-20) **DEFERRED AT THE AGENT'S REQUEST TO 3/9/05.**

5. **Project # 1001031**
05DRB-00140 Major-Vacation of Public Easements

BOHANNAN HUSTON agent(s) for BUILD NEW MEXICO request(s) the above action(s) for all or a portion of Tract(s) F, **SANDIA SCIENCE AND TECHNOLOGY PARK,** zoned IP, located on INNOVATION PARKWAY SE, between RESEARCH RD SE and GIBSON AVE SE containing approximately 10 acre(s). [REF: 01DRB00788, 03DRB01848] (M-21) **VACATION WAS APPROVED AS SHOWN ON EXHIBIT B IN THE PLANNING FILE.**

05DRB-00298 Minor-Prelim&Final Plat Approval

BOHANNAN HUSTON agent(s) for BUILD NEW MEXICO request(s) the above action(s) for all or a portion of Tract(s) F-1 & F-2, **SANDIA SCIENCE AND TECHNOLOGY PARK,** zoned IP, located on INNOVATION PARKWAY SE, between RESEARCH RD SE and GIBSON AVE SE containing approximately 11 acre(s). [REF: DRB 1001031, 01DRB00788, 05DRB00140] (M-21) **PRELIMINARY AND FINAL PLAT WERE APPROVED WITH FINAL SIGN OFF DELEGATED TO PLANNING FOR AIDS DXF AND THE 15-DAY APPEAL PERIOD.**

6. **Project # 1003684**
05DRB-00118 Major-Vacation of Pub Right-of-Way
05DRB-00121 Major-Preliminary Plat Approval
05DRB-00119 Minor-Sidewalk Waiver
05DRB-00120 Minor-Temp Defer SDWK

MARK GOODWIN & ASSOCIATES PA agent(s) for COLLATZ INC request(s) the above action(s) for all or a portion of Tract(s) A, B and B2B1, Block(s) 7-14, CALABACILLAS ARROYO, PARADISE HEIGHTS, UNIT 5, SEVILLE, UNIT 7, (to be known as **ANASAZI RIDGE SUBDIVISION, UNITS 1, 2 & 3**) zoned R-1 residential zone, located on MCMAHON BLVD NW, between WESTSIDE RD NW and UNIVERSE BLVD NW containing approximately 92 acre(s). [REF: 04DRB01443] [*Deferred from 2/16/05 & 2/23/05]* (A-10) **DEFERRED AT THE AGENT'S REQUEST TO 3/2/05.**

7. **Project # 1003790**
05DRB-00085 Major-Vacation of Public Easements

BOHANNAN HUSTON INC agent(s) for MCT INDUSTRIES request(s) the above action(s) for all or a portion of Lot(s) 1A & 25, Tract(s) H-1-C & A, Block(s) 1, **LANDS OF FILBERTO GURULE and NORTH ALBUQUERQUE ACRES,** zoned IP industrial park zone, located on NORTH I-25, between BALLOON FIESTA PARKWAY NE and SAN MATEO DR NE containing approximately 17 acre(s).[REF:04DRB01790] *[Deferred from 2/9/05 & 2/16/05]* (B-18) **VACATION WAS APPROVED AS SHOWN ON EXHIBIT B IN THE PLANNING FILE.**

05DRB-00158 Minor-SiteDev Plan Subd

DEKKER PERICH SABATINI agent(s) for MCT INDUSTRIES request(s) the above action(s) for all or a portion of Lot(s) 1-A & 25, Block(s) 1, Tract(s) H-1-C & A, **LANDS OF FILBERTO GURULE and NORTH ALBUQUERQUE ACRES,** zoned IP industrial park zone, located on NORTH I-25, between BALLOON FIESTA PARKWAY NE and SAN MATEO BLVD NE containing approximately 12 acre(s). [REF: 05DRB00085] *[Deferred from 2/9/05 & 2/16/05]* (B-18) **SITE PLAN FOR SUBDIVISION WAS APPROVED WITH FINAL SIGN OFF DELEGATED TO PLANNING FOR COMMENTS ON THE REVISIONS OF THE SITE PLAN.**

05DRB-00165 Minor-Prelim&Final Plat Approval

BOHANNAN HUSTON agent(s) for MCT INDUSTRIES request(s) the above action(s) for all or a portion of Tract(s) A, B & C, **NORTH GATEWAY,** zoned IP, located on NORTH I-25, between BALLOON FIESTA PARKWAY NE and SAN MATEO DR NE containing approximately 38 acre(s). [REF: 04DRB1790] *[Deferred from 2/9/05 & 2/16/05]* (B-18) **WITH THE SIGNING OF THE INFRASTRUCTURE LIST DATED 2/23/05 THE PRELIMINARY PLAT WS APPROVED WITH THE CONDITION: THE AMAFCA BOARD SHALL ALSO VACATE THIS EASEMENT AND THE DEVELOPER SHALL ENTER INTO A TURN-KEY AGREEMENT WITH AMAFCA FOR THE MAINTENANCE OF THE CHANNEL. THE FINAL PLAT WAS INDEFINITELY DEFERRED FOR THE SIA.**

8. **Project # 1003475**
04DRB-01694 Major-Vacation of Pub Right-of-Way
04DRB-01695 Major-Preliminary Plat Approval
04DRB-01696 Minor-Temp Defer SDWK

WILSON & COMPANY INC agent(s) for FELIX RABADI request(s) the above action(s) for unplatted lands and all or a portion of Tract(s) 2, PARAGON RESOURCES, (to be known as **PARADISE VIEW SUBDIVISION**) zoned RLT, located on PARADISE BLVD NW, between CONEFLOWER NW and LYON NW containing approximately 22 acre(s). [REF: 04DRB00842] *[Deferred from 12/1/04, 1/26/05 & 2/9/05 & 2/16/05 & 2/23/05]* (B-10) **DEFERRED AT THE AGENT'S REQUEST TO 3/9/05.**

SITE DEVELOPMENT PLANS, AMENDED PLANS, AND MASTER DEVELOPMENT PLANS

NOTE: IF THE APPLICANT/AGENT IS NOT PRESENT WHEN THEIR REQUEST IS CALLED, THE REQUEST MAY BE INDEFINITELY DEFERRED.

9. **Project # 1003865**
05DRB-00304 Minor-SiteDev Plan BldPermit

DORMAN BREEN ARCHITECTS agent(s) for JAY PARKS request(s) the above action(s) for all or a portion of Lot(s) 22A, Block(s) 28, Tract(s) A, NORTH ALBUQUERQUE ACRES, UNIT B, (to be known as **OAKLAND SELF STORAGE)** zoned SU-2 IP, located on OAKLAND AVE NE, between SAN PEDRO NE and LOUISIANA NE containing approximately 4 acre(s). [REF: 05DRB00006] (C-18) **INDEFINITELY DEFERRED AT THE AGENT'S REQUEST.**

10. **Project # 1000980**
05DRB-00161 Minor-Amnd SiteDev Plan BldPermit/EPC
05DRB-00162 Minor-SiteDev Plan Subd/EPC
05DRB-00163 Minor-SiteDev Plan BldPermit/EPC

NCA ARCHITECTS agent(s) for NEW MEXICO BANK & TRUST request(s) the above action(s) for all or a portion of Tract(s) A-3-B, **SIERRA VISTA SHOPPING CENTER,** zoned C-2 community commercial zone, located on MONTGOMERY BLVD NE, between PARSIFAL ST NE and EUBANK BLVD NE containing approximately 1 acre(s). [REF: ZA-01-201, Z-93-83, DRB-93-332, ZA-81-4, Z-77-78, Z-77-78-1, 01DRB01131, 01DRB01740, 02DRB01039, 01EPC00731] **[Carmen Marrone, EPC Case Planner]** *[Deferred from 2/9/05 & 2/16/05 & 2/23/05]* (G-20) **DEFERRED AT THE AGENT'S REQUEST TO 3/2/05.**

05DRB-00160 Minor-Prelim&Final Plat Approval

RON TYREE agent(s) for SIERRA VISTA ASSOCIATES LLC request(s) the above action(s) for all or a portion of Tract(s) A-3, **SIERRA VISTA SHOPPING CENTER,** zoned C-2 community commercial zone (SC), located on MONTGOMERY BLVD NE, between EUBANK BLVD NE and PARSIFAL ST NE containing approximately 15 acre(s). [REF: ZA-01-201, Z-93-83, DRB-93-332, ZA-81-4, Z-77-78-1, 01DRB01739, 01DRB01131, 01DRB01740, 02DRB01039, 01EPC00731] *[Deferred from 2/9/05 & 2/16/05 & 2/23/05]* (G-20) **DEFERRED AT THE AGENT'S REQUEST TO 3/2/05.**

MINOR PLATS, FINAL (MAJOR) PLATS, AMENDED PLATS AND PLANS

11. **Project # 1002928**
05DRB-00297 Major-Amnd Prelim Plat Approval
05DRB-00308 Major-Final Plat Approval

SURV-TEK, INC agent(s) for LONGFORD AT THE TRAILS, LLC request(s) the above action(s) for all or a portion of Tract(s) D, **TAOS AT THE TRAILS,** zoned R-D, located on TREELINE AVE NW, between RAINBOW BLVD NW and SOUTH OF PASEO DEL NORTE NW containing approximately 19 acre(s).[REF: DRB04-00718] *[Deferred from 2/23/05]* (C-9) **DEFERRED AT THE AGENT'S REQUEST TO 3/2/05.**

12. **Project # 1003417**
05DRB-00238 Minor-Amnd Prelim Plat Approval
05DRB-00237 Major-Final Plat Approval

MARK GOODWIN & ASSOCIATES PA agent(s) for ALPHA EQUITIES LLC request(s) the above action(s) for all or a portion of Lot(s) 22-30, Block(s) 11, Tract(s) 1, NORTH ALBUQUERQUE ACRES (to be known as **MOUNTAIN TRAIL SUBDIVISION, UNIT 3**, zoned R-D, located on GLENDALE AVE NE, between WYOMING BLVD NE and BARSTOW ST NE containing approximately 10 acre(s). [REF: 04DRB00671, 04DRB01056, 04DRB01057, 04DRB01058, 04DRB01232] (B-19) **AMENDED PRELIMINARY PLAT WAS APPROVED. AMENDED INFRASTRUCTURE LIST DATED 2/23/05 WAS APPROVED. FINAL PLAT WAS APPROVED WITH FINAL SIGN OFF DELEGATED TO PARKS FOR CASH-IN-LIEU.**

13. **Project # 1003759**
05DRB-00294 Minor-Prelim&Final Plat Approval

SURVEYS SOUTHWEST LTD agent(s) for KEN BALIZER request(s) the above action(s) for all or a portion of Tract(s) 173A and 174, MRGCD MAP 31, (to be known as **LANDS OF KEN BALIZER,** zoned RA-2, located on ARCADIAN TR NW, between CALLE LOS VECINOS NW and SAN ISIDRO ST NW containing approximately 1 acre(s). [REF: 04DRB01702] (G-13) **INDEFINITELY DEFERRED AT THE AGENT'S REQUEST.**

14. **Project # 1003761**
05DRB-00210 Minor-Prelim&Final Plat Approval

SURVEYS SOUTHWEST, LTD agent(s) for DOUGLAS F. VAUGHAN request(s) the above action(s) for all or a portion of Lot(s) 15 & portion of 16, Block(s) 20, Tract(s) 3, **NORTH ALBUQUERQUE ACRES, UNIT 3,** zoned SU-2 MIXED USE, located on PASEO DEL NORTE NE, between HOLLY AVE NE and HOLBROOK NE containing approximately 2 acre(s). *[Deferred from 2/16/05]* (C-20) **WITH THE SIGNING OF THE INFRASTRUCTURE LIST DATED 2/23/05 THE PRELIMINARY PLAT WAS APPROVED. THE FINAL PLAT WAS INDEFINITELY DEFERRED FOR THE SIA.**

15. **Project # 1003420**
05DRB-00295 Minor-Final Plat Approval

ISAACSON & ARFMAN PA agent(s) for WINDMILL MANOR ESTATES LLC request(s) the above action(s) for all or a portion of Tract(s) B-2 UNIT 3, VOLCANO CLIFFS, (to be known as **SUNRISE RIDGE SUBDIVISION**) zoned R-LT residential zone, located on TESUQUE DR NW, between MONTANO RD NW and CRYSTAL ST NW containing approximately 5 acre(s). [REF: 04EPC00682, 04DRB01508, 04DRB01509] (E-10) **FINAL PLAT WAS APPROVED WITH FINAL SIGN OFF DELEGATED TO PARKS FOR CASH-IN-LIEU AND PLANNING FOR PROPERTY MANAGEMENT'S SIGNATURE.**

16. **Project # 1000081**
05DRB-00305 Minor-Prelim&Final Plat Approval

TIERRA WEST agent(s) for RSF LAND & CATTLE CO LLC request(s) the above action(s) for all or a portion of Tract(s) B3D, **COTTONWOOD CORNERS,** zoned SU-1 IP, located on COORS BLVD BYPASS NW, between ELLISON DR NW and NM 528 NW containing approximately 6 acre(s).[REF: 00DRB00276, 04AA01343] (A-13/A-14) **PRELIMINARY PLAT WAS APPROVED WITH FINAL SIGN OFF DELEGATED TO PLANNING FOR NEW MEXICO UTILITIES SIGNATURE AND A COPY OF AN AMENDED SITE PLAN TO MAKE SURE IT MATCHES THE PLAT.**

17. **Project # 1002506**
05DRB-00306 Minor-Final Plat Approval

TIERRA WEST agent(s) for STH INVESTMENTS request(s) the above action(s) for all or a portion of Tract(s) 6C,12A and 12B, PORTION OF BLACK RANCH, (to be known as **BLACK FARMS ESTATES, UNITS 1 & 2,** zoned RA-1, located on COORS BLVD NW, between PASEO DEL NORTE NW and WESTSIDE DR NW containing approximately 67 acre(s). [REF: 04DRB00637, 03EPC00501] (C-13) **FINAL PLAT WAS APPROVED WITH FINAL SIGN OFF DELEGATED TO PARKS FOR CASH-IN-LIEU AND CITY ENGINEER FOR AMAFCA'S SIGNATURES.**

18. **Project # 1002639**
05DRB-00307 Minor-Prelim&Final Plat Approval

COMMUNITY SCIENCES CORP agent(s) for RAYLEE HOMES request(s) the above action(s) for all or a portion of Lot(s) 17, Block(s) A, **TREMENTINA SUBDIVISION,** zoned R-D, located on VIA CONTENTA NE, between WYOMING NE and LOUISIANA NE containing approximately 1 acre(s). [REF: 03DRB-00717, 03DRB-00719, 03DRB-00720, 03DRB-00721, 03DRB-00722, 03DRB02026] *[Deferred from 2/23/05]* (C-19) **DEFERRED AT THE AGENT'S REQUEST TO 3/2/05.**

19. **Project # 1002743**
04DRB-00888 Minor-Final Plat Approval

BORDENAVE DESIGNS agent(s) for HARVEST HOMES LLC request(s) the above action(s) for all or a portion of Tract(s) C, **LA LUZ DEL OESTE, UNIT 4,** zoned SU-1 PRD, located on COORS BLVD NW, between WESTERN TRAILS NW and DELLYNE NW containing approximately 2 acre(s).[REF:Z-03-01007, 03DRB00989]*[Final Plat was Indef Deferred for SIA 6/16/04] [Deferred from 2/9/05 & 2/16/05]* (F-11) **FINAL PLAT WAS APPROVED AND SIGNED OFF BY THE BOARD.**

20. **Project # 1001934**
05DRB-00292 Minor-Prelim&Final Plat Approval

WAYJOHN SURVEYING INC agent(s) for WILLIAM RIORDAN & PATRICK NAPOLEONE request(s) the above action(s) for all or a portion of Tract(s) 4C-4G, **ALVARADO GARDENS, UNIT 1,** zoned RA-2, located on RIO GRANDE BLVD NW, between CAMPBELL RD NW and MATTHEW AVE NW containing approximately 2 acre(s). [REF: 02DRB00697, 02DRB01863, 02DRB01866, 04DRB01471] (G-12) **PRELIMINARY AND FINAL PLAT WERE APPROVED AND SIGNED OFF BY THE BOARD.**

NO ACTION IS TAKEN ON THESE CASES:
APPLICANT - AGENT IS REQUIRED TO BE AT THE MEETING

21. **Project # 1000795**
05DRB-00302 Minor-Sketch Plat or Plan

WAYJOHN SURVEYING INC agent(s) for JOHN & NADINE MINER request(s) the above action(s) for all or a portion of Lot(s) 24, **ALVARADO GARDENS, UNIT 1,** zoned RA-2, located on MATTHEW AVE NW, between RIO GRANDE BLVD MW and 12TH ST NW containing approximately 2 acre(s). (G-13) **THE ABOVE REQUEST WAS REVIEWED AND COMMENTS WERE GIVEN.**

22. **Project # 1003971**
05DRB-00293 Minor-Sketch Plat or Plan

WAYJOHN SURVEYING INC agent(s) for LUBRICAR INC request(s) the above action(s) for all or a portion of Tract(s) A & B, **ROBERT H MOTT ADDITION,** zoned C-2, located on 4TH ST NW, between GENE AVE NW and GAVILAN PL NW containing approximately 1 acre(s). (F-14) **THE ABOVE REQUEST WAS REVIEWED AND COMMENTS WERE GIVEN.**

23. **Project # 1003975**
05DRB-00301 Minor-Sketch Plat or Plan

WAYJOHN SURVEYING INC agent(s) for COE PROPERTIES INC request(s) the above action(s) for all or a portion of Lot(s) 6, 7, 12 and 13, Block(s) 15, MESA GRANDE ADDITION (to be known as **ZUNI TOWNHOMES)** zoned 0-R, located on WASHINGTON ST SE, between CENTRAL AVE SE and ZUNI RD SE containing approximately 1 acre(s).[REF:ZA-78-377]K-17) **THE ABOVE REQUEST WAS REVIEWED AND COMMENTS WERE GIVEN.**

24. **Project # 1003973**
05DRB-00299 Minor-Sketch Plat or Plan

ISAACSON AND ARFMAN agent(s) for STILLBROOKE HOMES request(s) the above action(s) for all or a portion of **TRACT 7, THE TRAILS UNIT 2,** zoned R-D, located on OAKRIDGE ST NW, between WOODMONT AVE NW and TREELINE NW containing approximately 15 acre(s). (C-9) **THE ABOVE REQUEST WAS REVIEWED AND COMMENTS WERE GIVEN.**

25. **Project # 1003974**
05DRB-00300 Minor-Sketch Plat or Plan

ISAACSON AND ARFMAN, P.A. agent(s) for STILLBROOKE HOMES request(s) the above action(s) for all or a portion of **TRACT 5, THE TRAILS UNIT 2,** zoned R-D, located on OAKRIDGE ST NW, between TREELINE NW and UNIVERSE BLVD NW containing approximately 6 acre(s). (C-9) **THE ABOVE REQUEST WAS REVIEWED AND COMMENTS WERE GIVEN.**

26. Approval of the Development Review Board Minutes for February 2, 2005. **DEVELOPMENT REVIEW BOARD MINUTES FOR FEBRUARY 2, 2005 WERE APPROVED.**

ADJOURNED: 1:30 P.M.

CITY OF ALBUQUERQUE

ALBUQUERQUE
Making History

PLANNING DEPARTMENT
DEVELOPMENT AND BUILDING SERVICES
HYDROLOGY DEVELOPMENT SECTION

DEVELOPMENT REVIEW BOARD--SPEED MEMO

DRB CASE NO/PROJECT NO: 1003417 **AGENDA ITEM NO: 12**

SUBJECT:

(01) Sketch Plat/Plan	(05) Site Plan for Subd	(10) Sector Dev Plan
(02) Bulk Land Variance	(06) Site Plan for BP	(11) Grading Plan
(03) Sidewalk Variance	(07) Vacation	(12) SIA Extension
(03a) Sidewalk Deferral	(08) Final Plat	(13) Master Dev. Plan
(04) Preliminary Plat AND	(09) Infrastructure List	(14) Cost Allocation Plan

ACTION REQUESTED:

REV/CMT:() APP:() SIGN-OFF:(x) EXTN:() AMEND:(x)

ENGINEERING COMMENTS:

The Hydrology Section has no objection to the amendment request.
An executed Subdivision Improvements Agreement with financial guarantees is on file for Final Plat sign-off.

RESOLUTION:

APPROVED ____; DENIED ____; DEFERRED _____; COMMENTS PROVIDED ___; WITHDRAWN

SIGNED-OFF: **(SEC-PLN) (SP-SUB) (SP-BP) (FP)** BY: **(UD) (CE) (TRANS) (PKS) (PLNG)**

DELEGATED: **(SEC-PLN) (SP-SUB) (SP-BP) (FP)** TO: **(UD) (CE) (TRANS) (PKS) (PLNG)**

FOR:

SIGNED: Bradley L. Bingham
City Engineer/AMAFCA Designee

DATE: February 23, 2005

P.O. Box 1293
Albuquerque
New Mexico 87103
www.cabq.gov

CITY OF ALBUQUERQUE
PLANNING DEPARTMENT
February 23, 2005
DRB Comments

ITEM # 12

PROJECT # 1003417 APPLICATION # 05-00238 & 00237

RE: Mountain Trail Subdivision/ amended Prelim Plat & Final plat

Were there any other changes beside the subdivision name in this second amendment?

Even though the number of lots in this subdivision does not conform to the revised La Cueva Sector Plan, Planning has no objection to these requested actions. Because the preliminary plat was approved with 27 lots, it is too late to amend the number of lots at this time.

Planning must record the plat.

Sheran Matson

Sheran Matson, AICP DRB Chair

City of Albuquerque

DEVELOPMENT/ PLAN REVIEW APPLICATION

Supplemental form

SUBDIVISION
- ____ Major Subdivision action
- ____ Minor Subdivision action
- ____ Vacation
- ____ Variance (Non-Zoning)

SITE DEVELOPMENT PLAN
- ____ for Subdivision
- ____ for Building Permit
- ____ Administrative Amendment (AA)
- ____ IP Master Development Plan
- ____ Cert. of Appropriateness (LUCC)

STORM DRAINAGE (Form D)
- ____ Storm Drainage Cost Allocation Plan

S Z ZONING & PLANNING
- ____ Annexation
  - ____ County Submittal
  - ____ EPC Submittal
- ____ Zone Map Amendment (Establish or Change Zoning)
- ____ Sector Plan **(Phase I, II, III)**
- ____ Amendment to Sector, Area, Facility or Comprehensive Plan
- ____ Text Amendment (Zoning Code/Sub Regs)
- ____ Street Name Change (Local & Collector)

V

P

D

L A APPEAL / PROTEST of...
- ____ Decision by: DRB, EPC, LUCC, Planning Director or Staff, ZHE, Zoning Board of Appeals

PRINT OR TYPE IN BLACK INK ONLY. The applicant or agent must submit the completed application in person to the Planning Department Development Services Center, 600 2nd Street NW, Albuquerque, NM 87102. Fees must be paid at the time of application. Refer to supplemental forms for submittal requirements.

APPLICATION INFORMATION:

Professional/Agent (if any): MARK GOODWIN & ASSOCIATES, PA PHONE: 828-2200
ADDRESS: P.O. BOX 90606 FAX: ____
CITY: ALBUQUERQUE STATE NM ZIP 87199 E-MAIL: ____

APPLICANT: QUIVERA 2, LLC PHONE: 248-1688
ADDRESS: P.O. BOX 27560 FAX: ____
CITY: ALBUQUERQUE STATE NM ZIP 87125 E-MAIL: ____
Proprietary interest in site: OWNER List **all** owners: ____

DESCRIPTION OF REQUEST: APPROVAL OF 2-YEAR EXTENSION OF SIDEWALK DEFERRAL (MOUNTAIN TRAIL)

Is the applicant seeking incentives pursuant to the Family Housing Development Program? ___ Yes. ✓ No.

SITE INFORMATION: ACCURACY OF THE EXISTING LEGAL DESCRIPTION IS CRUCIAL! ATTACH A SEPARATE SHEET IF NECESSARY.

Lot or Tract No. ____ Block: ____ Unit: ____
Subdiv/Addn/TBKA: MOUNTAIN TRAIL
Existing Zoning: R-D Proposed zoning: R-D MRGCD Map No ____
Zone Atlas page(s): B-19 UPC Code: 101906529805741007

CASE HISTORY:
List any current or prior case number that may be relevant to your application (Proj., App., DRB-, AX_,Z_, V_, S_, etc.): 1003417, 04-01057, 08DRB-70477

CASE INFORMATION:
Within city limits? ✓ Yes Within 1000FT of a landfill? NO
No. of **existing** lots: 27 No. of **proposed** lots: 27 Total area of site (acres): ____
LOCATION OF PROPERTY BY STREETS: On or Near: GLENDALE NE
Between: WYOMING NE and BARSTOW NE

Check-off if project was previously reviewed by Sketch Plat/Plan ☐, or Pre-application Review Team ☐. Date of review: ____

SIGNATURE ____ DATE 10-18-10
(Print) GREGORY J. KRENIK, PE Applicant: ☐ Agent: ☒

FOR OFFICIAL USE ONLY Form revised 4/07

☐ **INTERNAL ROUTING**
- ☒ All checklists are complete
- ☒ All fees have been collected
- ☒ All case #s are assigned
- ☒ AGIS copy has been sent
- ☒ Case history #s are listed
- ☐ Site is within 1000ft of a landfill
- ☐ F.H.D.P. density bonus
- ☐ F.H D.P. fee rebate

Application case numbers	Action	S.F.	Fees
10DRB - ____ - 70299	ESIA	____	$ 50.00
____ - ____ - ____	____	____	$ 20.00
____ - ____ - ____	____	____	$ ____
____ - ____ - ____	____	____	$ ____
____ - ____ - ____	____	____	$ ____
			Total
			$ 70.00

Hearing date November 3, 2010

10-20-10
Planner signature / date

Project # 1003417

FORM V: SUBDIVISION VARIANCES & VACATIONS

☐ **BULK LAND VARIANCE (DRB04)** **(PUBLIC HEARING CASE)**

__ Application for Minor Plat on FORM S-3, including those submittal requirements. **24 copies**
__ Letter briefly describing and explaining: the request, compliance with the Development Process Manual, and all improvements to be waived.
__ Notice on the proposed Plat that there are conditions to subsequent subdivision (refer to DPM)
__ Office of Community & Neighborhood Coordination inquiry response, notifying letter, certified mail receipts
__ Sign Posting Agreement
__ Fee (see schedule)
__ List any original and/or related file numbers on the cover application

DRB Public hearings are approximately 30 DAYS after the filing deadline. Your attendance is required.

☐ **VACATION OF PUBLIC EASEMENT (DRB27)**
☐ **VACATION OF PUBLIC RIGHT-OF-WAY (DRB28)**

__ The complete document which created the public easement (folded to fit into an 8.5" by 14" pocket) **24 copies.** (Not required for City owned public right-of-way.)
__ Drawing showing the easement or right-of-way to be vacated, etc. (not to exceed 8.5" by 11") **24 copies**
__ Zone Atlas map with the entire property(ies) clearly outlined
__ Letter briefly describing, explaining, and justifying the request
__ Office of Community & Neighborhood Coordination inquiry response, notifying letter, certified mail receipts
__ Sign Posting Agreement
__ Fee (see schedule)
__ List any original and/or related file numbers on the cover application

Unless the vacation is shown on a DRB approved plat recorded by the County Clerk within one year, it will expire.

DRB Public hearings are approximately 30 DAYS after the filing deadline. Your attendance is required.

☐ **SIDEWALK VARIANCE (DRB20)**
☐ **SIDEWALK WAIVER (DRB21)**

__ Scale drawing showing the proposed variance or waiver (not to exceed 8.5" by 14") **6 copies**
__ Zone Atlas map with the entire property(ies) clearly outlined
__ Letter briefly describing, explaining, and justifying the variance or waiver
__ List any original and/or related file numbers on the cover application

DRB meetings are approximately 8 DAYS after the Tuesday noon filing deadline. Your attendance is required.

☐ **SUBDIVISION DESIGN VARIANCE FROM MINIMUM DPM STANDARDS (DRB25)**

__ Scale drawing showing the location of the proposed variance or waiver (not to exceed 8.5" by 14") **24 copies**
__ Zone Atlas map with the entire property(ies) clearly outlined
__ Letter briefly describing, explaining, and justifying the variance
__ Office of Community & Neighborhood Coordination inquiry response, notifying letter, certified mail receipts
__ Sign Posting Agreement
__ Fee (see schedule)
__ List any original and/or related file numbers on the cover application

DRB meetings are approximately 30 DAYS after the filing deadline. Your attendance is required.

☑ ~~**TEMPORARY DEFERRAL OF SIDEWALK CONSTRUCTION (DRB19)**~~
☑ **EXTENSION OF THE SIA FOR TEMPORARY DEFERRAL OF SIDEWALK CONSTRUCTION (DRB07)**

✓ Drawing showing the sidewalks subject to the proposed deferral or extension (not to exceed 8.5" by 14") **6 copies**
✓ Zone Atlas map with the entire property(ies) clearly outlined
✓ Letter briefly describing, explaining, and justifying the deferral or extension
✓ List any original and/or related file numbers on the cover application

DRB meetings are approximately 8 DAYS after the Tuesday noon filing deadline. Your attendance is required.

☐ **VACATION OF PRIVATE EASEMENT (DRB26)**
☐ **VACATION OF RECORDED PLAT (DRB29)**

__ The complete document which created the private easement/recorded plat (not to exceed 8.5" by 14") **6 copies**
__ Scale drawing showing the easement to be vacated (8.5" by 11") **6 copies**
__ Zone Atlas map with the entire property(ies) clearly outlined
__ Letter/documents briefly describing, explaining, and justifying the vacation **6 copies**
__ Letter of authorization from the grantors and the beneficiaries (private easement only)
__ Fee (see schedule)
__ List any original and/or related file numbers on the cover application

Unless the vacation is shown on a DRB approved plat recorded by the County Clerk within one year, it will expire.

DRB meetings are approximately 8 DAYS after the Tuesday noon filing deadline. Your attendance is required.

I, the applicant, acknowledge that any information required but not submitted with this application will likely result in deferral of actions.

GREGORY J. KRENIK
Applicant name (print)

10-18-10
Applicant signature / date

Form revised 4/07

☒ Checklists complete
☒ Fees collected
☒ Case #s assigned
☒ Related #s listed

Application case numbers
10DRB - - 70299
- -
- -

10-20-10
Planner signature / date

Project # 1003417

D. Mark Goodwin & Associates, P.A.
Consulting Engineers
P.O. BOX 90606, ALBUQUERQUE,NM 87199
(505) 828-2200 FAX 797-9539

October 15, 2010

Mr. Jack Cloud
DRB Chair
City of Albuquerque
PO Box 1293
Albuquerque, NM 87103

Re: Mountain Trail – 1003417

Dear Mr. Cloud:

We are requesting a 2 year extension of the sidewalk deferral for this project. The owner has not built all the homes and wishes to extend the SIA for the sidewalks. An exhibit showing the remaining sidewalk is attached.

Please contact our office if you have any questions.

Sincerely,

MARK GOODWIN & ASSOCIATES, PA

Gregory J. Krenik, PE
Vice President

GJK/sr

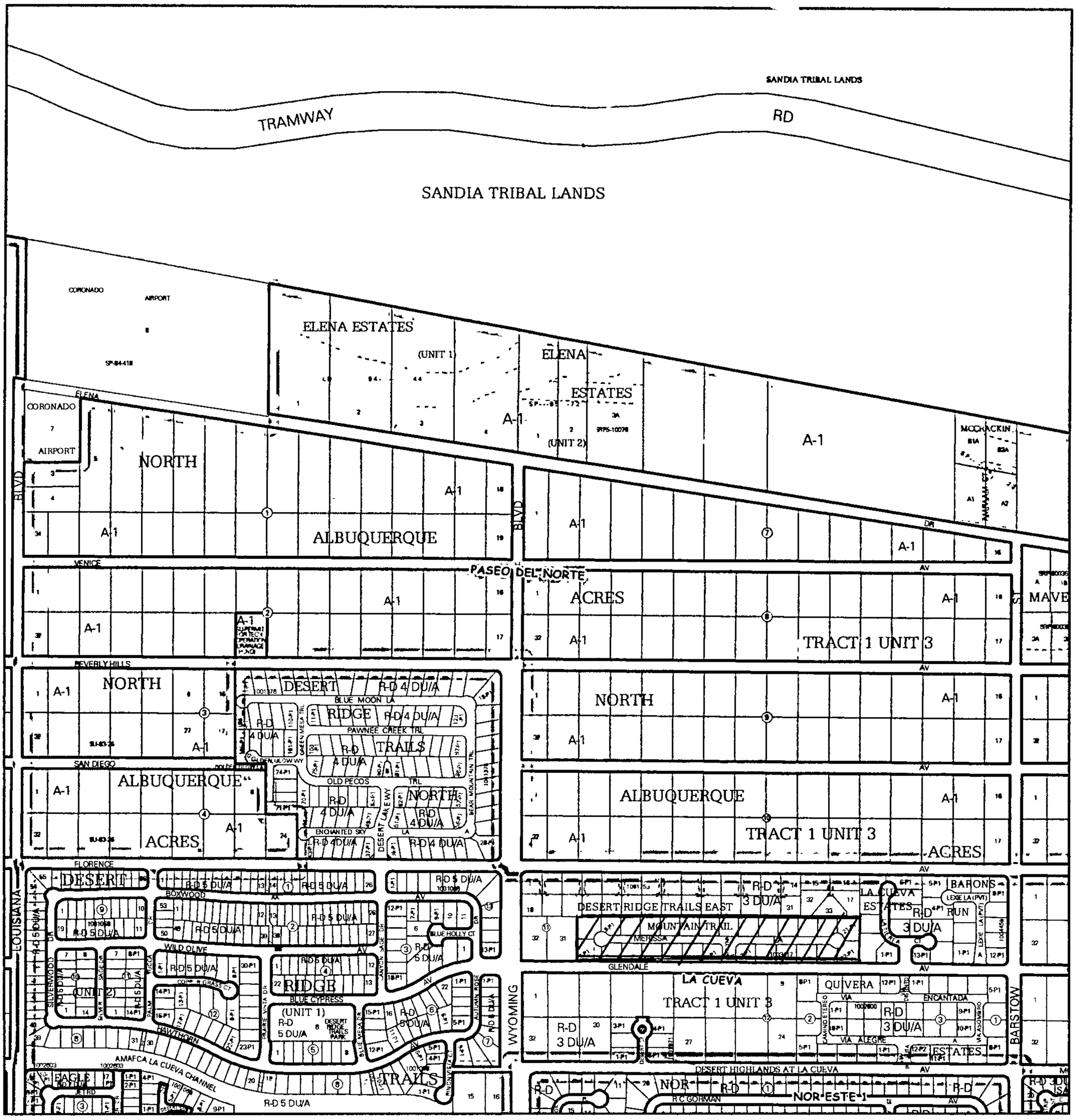

For more current information and more details visit: http://www.cabq.gov/gis

City of Albuquerque AGIS
Albuquerque Geographic Information System

Map amended through: 2/4/2010

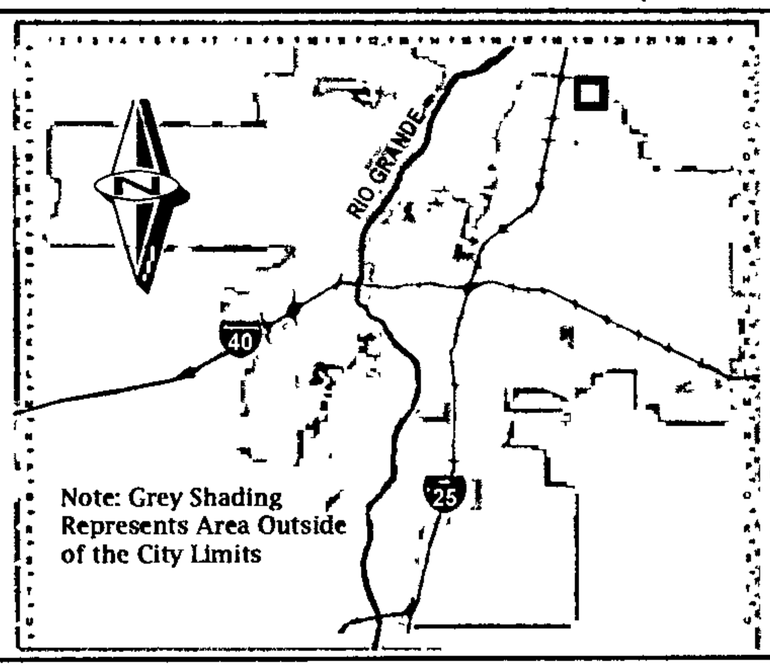

Zone Atlas Page:

B-19-Z

Selected Symbols

- SECTOR PLANS
- Design Overlay Zones
- City Historic Zones
- H-1 Buffer Zone
- Petroglyph Mon
- Escarpment
- 2 Mile Airport Zone
- Airport Noise Contours
- Wall Overlay Zone

0 750 1,500 Feet

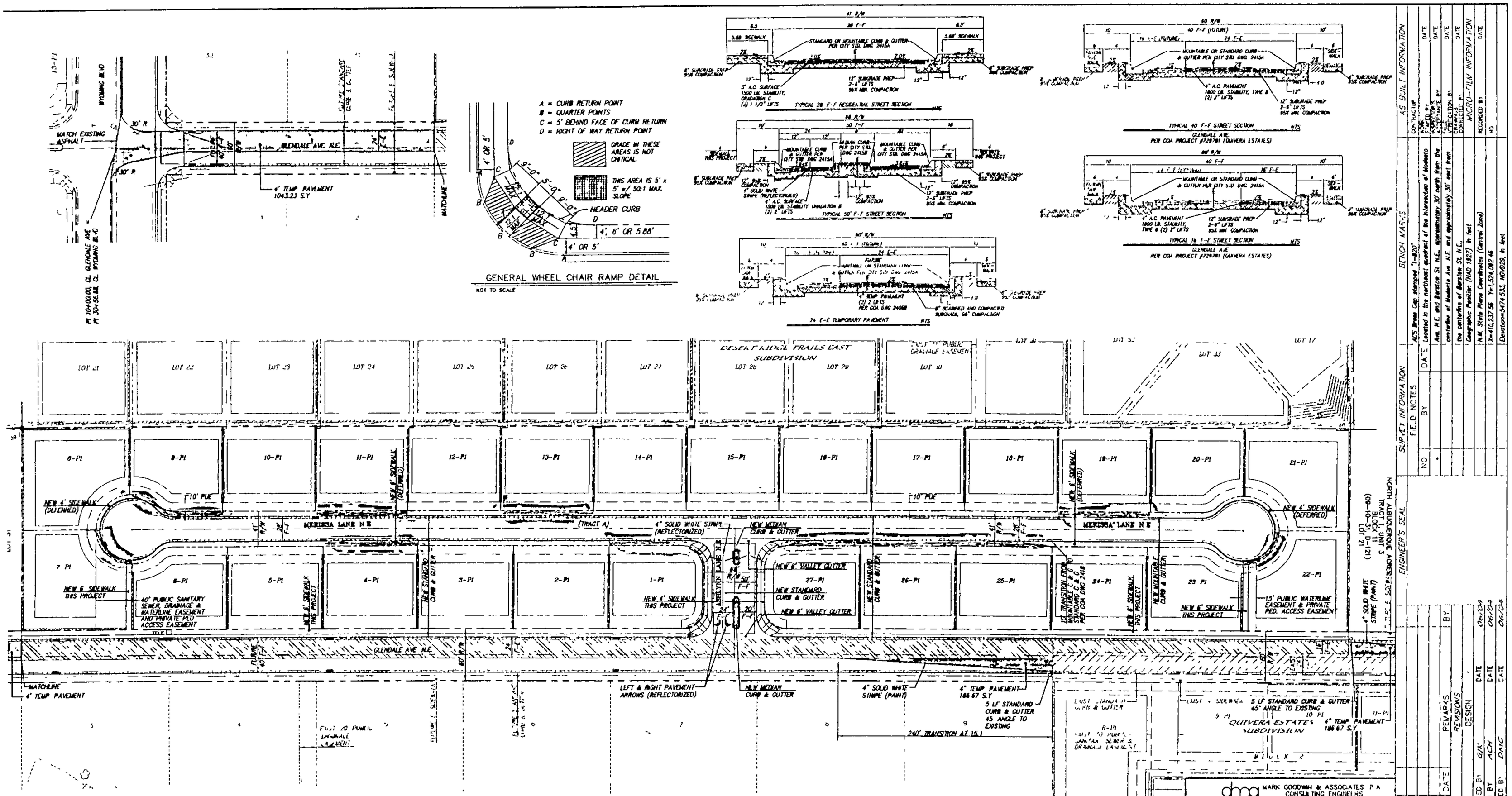

LEGEND

- EXISTING CHAIN LINK/WIRE FENCE
- EXISTING OVERHEAD ELECTRIC LINE
- EXISTING POWER POLE
- EXISTING GUY WIRE
- EXISTING TELEPHONE MANHOLE
- EXISTING TELEPHONE PEDESTAL
- NEW MOUNTABLE CURB & GUTTER
- NEW STANDARD CURB & GUTTER
- NEW STREET LIGHT
- NEW SIDEWALK
- NEW RIGHT-OF-WAY
- NEW CENTERLINE
- NEW LOT LINES
- NEW EASEMENTS
- NEW RETAINING WALL
- NEW 4" TEMPORARY PAVEMENT – PER COA STD DWG 2415B
- NEW PAVEMENT THIS PROJECT PER COA PROJECT #729781 (QUIVERA ESTATES)
- EXISTING PAVEMENT (QUIVERA ESTATES)

CONSTRUCTION NOTES

1. ALL SIDEWALKS PER CITY OF ALBUQUERQUE STANDARD DRAWING 2430.
2. ALL 6' VALLEY GUTTERS PER CITY OF ALBUQUERQUE STANDARD DRAWING 2420.
3. ALL HANDICAP RAMPS ARE PER DETAILS ON THIS SHEET, OR COA DETAIL 2441
4. TRANSITION FROM MOUNTABLE CURB TO STANDARD CURB SHALL BE 10 FEET
5. TRANSITION SECTION FROM FULL CROWN TO NO CROWN TO BE A MINIMUM OF 50 FEET PER C.O.A. STD DETAIL #2401.
6. ALL 10' VALLEY GUTTERS PER CITY OF ALBUQUERQUE STANDARD DRAWING 2422.
7. TRANSITION FROM MOUNTABLE CURB TO STANDARD CURB AT INTERSECTIONS SHALL OCCUR THROUGH THE H.C. RAMP PER C.O.A. STANDARD DRAWING 2418.
8. SOIL NOT HAVING THE MINIMUM R-VALUE OF 50 SHALL BE REMOVED TO A DEPTH OF 2 FEET AND REPLACED, BY THE CONTRACTOR, WITH SUITABLE MATERIAL, OR A PAVEMENT SECTION SHALL BE DESIGNED BY THE CONSULTANT ACCOMMODATING THE EXISTING R-VALUE PER C.O.A. STANDARD SPECIFICATIONS.
9. ALL MEDIAN NOSES TO BE PAINTED REFLECTORIZED YELLOW

50 25 0 50' 100
SCALE 1" = 50'

A4022QUIV/PLANS/A4022MPAV-50/09-28-04/ACH NHE

AS BUILT INFORMATION
CONTRACTOR
WORK STAKED BY | DATE
FIELD VERIFIED BY | DATE
DRAWINGS MARKED BY | DATE
CORRECTION BY | DATE
CAD CORRECTION BY | DATE
WICRO-FILM INFORMATION
RECORDED BY | DATE
NO

BENCH MARKS
ACS Brass Cap stamped "1-B20" Located in the northeast quadrant of the intersection of Modesto Ave. N.E. and Barstow St N.E. approximately 30' north from the centerline of Modesto Ave N.E. and approximately 30' east from the centerline of Barstow St. N.E.
Geographic Position (NAD 1927) in feet
N.M. State Plane Coordinates (Central Zone)
X=410,237.56 Y=1,524,082.46
Elevation=5474.533, NGVD29, in feet

SURVEY INFORMATION
FIELD NOTES
NO | BY | DATE

ENGINEER'S SEAL

NORTH ALBUQUERQUE ACRES
TRACT A, UNIT 3
(09-10-31 D-121)
LOT 21

REMARKS
REVISIONS
NO | DATE | BY

DESIGN
DESIGNED BY GAK DATE 06/04
DRAWN BY ACH DATE 06/04
CHECKED BY DMG DATE 06/04

dmg MARK GOODWIN & ASSOCIATES P.A.
CONSULTING ENGINEERS
P.O. BOX 90608
ALBUQUERQUE, NEW MEXICO 87199
(505) 828-2200 FAX (505) 797-9539

CITY OF ALBUQUERQUE
PUBLIC WORKS DEPARTMENT

TITLE
MOUNTAIN RIDGE SUBDIVISION
MASTER PAVING PLAN

DESIGN REVIEW COMMITTEE	CITY ENGINEER APPROVAL	LAST DESIGN PROJECT	MO/DAY/YR	MO/DAY/YR
#5454				

CITY PROJECT NO	ZONE MAP NO	SHEET	OF
745981	B-19	5	11

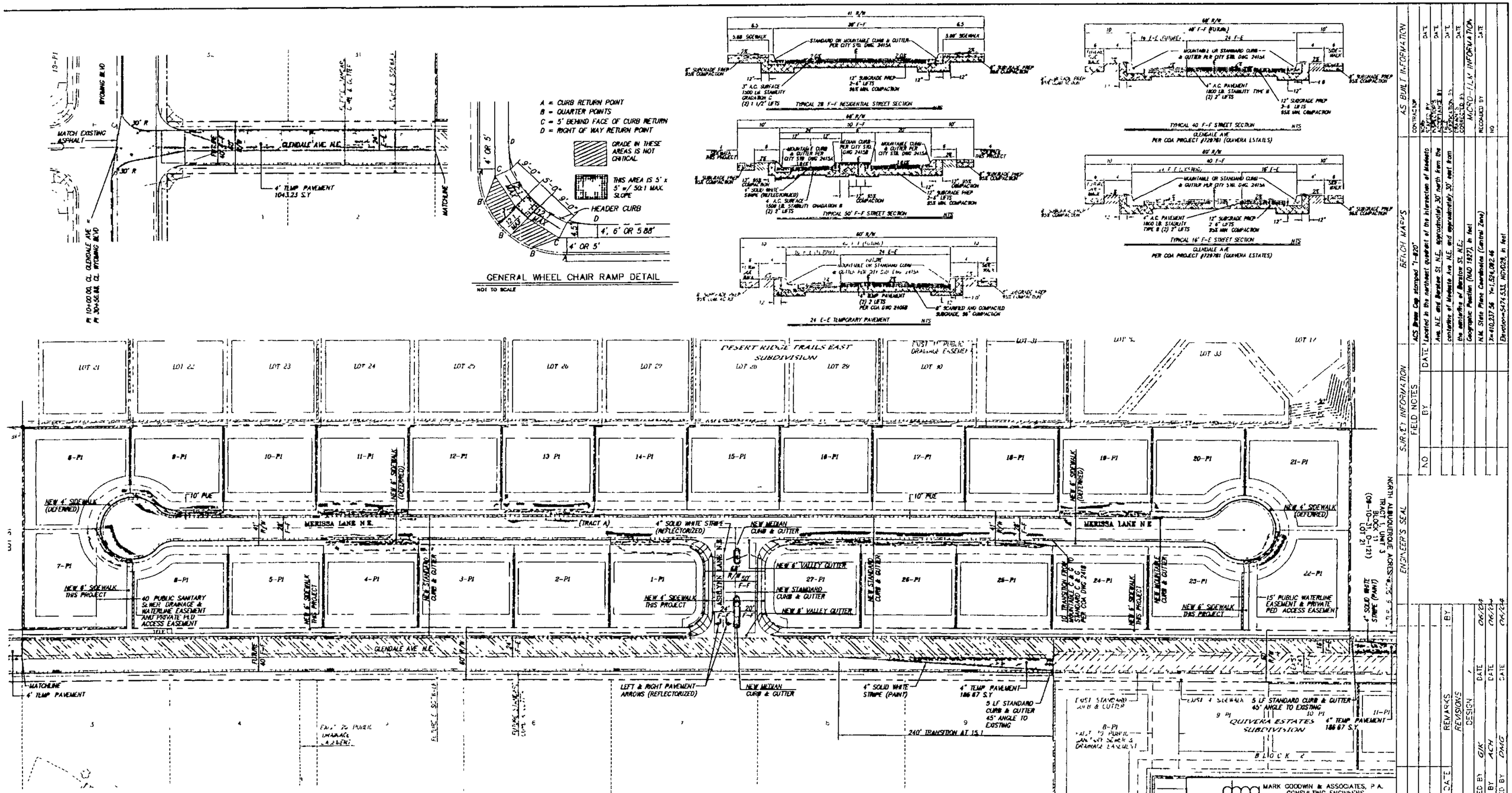

AS BUILT INFORMATION

NO.	BY	DATE	REMARKS

CONTRACTOR

NO.	BY	DATE

SURVEY INFORMATION

FIELD NOTES

NO.	BY	DATE

BENCH MARK'S

ACS Brass Cap stamped "1-B20" Located in the northwest quadrant of the intersection of Wyoming Ave. N.E. and Berdner St. N.E. approximately 30' north from the centerline of Wyoming Ave. N.E. and approximately 30' west from the centerline of Berdner St. N.E.

Geographic Position (NAD 1927), in feet
N.M. State Plane Coordinates (Central Zone)
X=410,237.58 Y=1,524,082.46
Elevation=5474.531 NGVD29, in feet

MICRO-FILM INFORMATION

RECORDED BY	DATE
NO	

ENGINEER'S SEAL

NO.	DATE	REVISIONS	BY

		DATE
DESIGNED BY	GJK	06/04
DRAWN BY	ACH	06/04
CHECKED BY	DMG	06/04

dmg MARK GOODWIN & ASSOCIATES, P.A.
CONSULTING ENGINEERS
P.O. BOX 90606
ALBUQUERQUE, NEW MEXICO 87199
(505) 828-2200 FAX (505) 797-9539

CITY OF ALBUQUERQUE
PUBLIC WORKS DEPARTMENT

TITLE
MOUNTAIN RIDGE SUBDIVISION
MASTER PAVING PLAN

DESIGN REVIEW COMMITTEE	CITY ENGINEER APPROVAL	LAYOUT NO.	MO/DAY/YR	MO/DAY/YR
#6454				

CITY PROJECT NO	ZONE MAP NO	SHEET	OF
745981	B-19	5	11

City of Albuquerque

DEVELOPMENT/ PLAN REVIEW APPLICATION

Supplemental form

SUBDIVISION — S
- ____ Major Subdivision action
- ____ Minor Subdivision action
- ____ Vacation — V
- ____ Variance (Non-Zoning)

SITE DEVELOPMENT PLAN — P
- ____ for Subdivision
- ____ for Building Permit
- ____ Administrative Amendment (AA)
- ____ IP Master Development Plan — D
- ____ Cert. of Appropriateness (LUCC) — L

STORM DRAINAGE (Form D) — A
- ____ Storm Drainage Cost Allocation Plan

ZONING & PLANNING — Z
- ____ Annexation
  - ____ County Submittal
  - ____ EPC Submittal
- ____ Zone Map Amendment (Establish or Change Zoning)
- ____ Sector Plan **(Phase I, II, III)**
- ____ Amendment to Sector, Area, Facility or Comprehensive Plan
- ____ Text Amendment (Zoning Code/Sub Regs)
- ____ Street Name Change (Local & Collector)

APPEAL / PROTEST of...
- ____ Decision by: DRB, EPC, LUCC, Planning Director or Staff, ZHE, Zoning Board of Appeals

PRINT OR TYPE IN BLACK INK ONLY. The applicant or agent must submit the completed application in person to the Planning Department Development Services Center, 600 2nd Street NW, Albuquerque, NM 87102. Fees must be paid at the time of application. Refer to supplemental forms for submittal requirements.

APPLICATION INFORMATION:

Professional/Agent (if any): MARK GOODWIN & ASSOCIATES, PA PHONE: 828-2200
ADDRESS: P.O. BOX 90606 FAX: ____
CITY: ALBUQUERQUE STATE NM ZIP 87199 E-MAIL: greg@goodwinengineers.com

APPLICANT: QUIVERA 2, LLC PHONE: 922-9411
ADDRESS: 100 GOLD SW, SUITE 209 FAX: ____
CITY: ALBUQUERQUE STATE NM ZIP 87120 E-MAIL: ____
Proprietary interest in site: OWNER **List all owners:** ____

DESCRIPTION OF REQUEST: REQUEST 2 YEAR EXTENSION OF SIDEWALK DEFERRAL — MOUNTAIN TRAILS —

Is the applicant seeking incentives pursuant to the Family Housing Development Program? ___ Yes. X No.

SITE INFORMATION: ACCURACY OF THE EXISTING LEGAL DESCRIPTION IS CRUCIAL! ATTACH A SEPARATE SHEET IF NECESSARY.

Lot or Tract No. ____ Block: ____ Unit: ____
Subdiv/Addn/TBKA: MOUNTAIN TRAILS
Existing Zoning: R-D Proposed zoning: R-D MRGCD Map No —
Zone Atlas page(s): B-19 UPC Code: ATTACHED

CASE HISTORY:
List **any** current or prior case number that may be relevant to your application (Proj., App., DRB-, AX_,Z_, V_, S_, etc.): 1003417, 04-01056

CASE INFORMATION:
Within city limits? X Yes Within 1000FT of a landfill? NO
No. of **existing** lots: 27 No. of **proposed** lots: 27 Total area of site (acres): ____
LOCATION OF PROPERTY BY STREETS: On or Near: GLENDALE AVE NE
Between: WYOMING and BARSTOW

Check-off if project was previously reviewed by Sketch Plat/Plan ☐, or Pre-application Review Team ☐. Date of review: ____

SIGNATURE ____ DATE 10-30-08
(Print) GREGORY J. KRENIK, PE Applicant: ☐ Agent: ☒

FOR OFFICIAL USE ONLY Form revised 4/07

	INTERNAL ROUTING	Application case numbers	Action	S.F.	Fees
	☒ All checklists are complete	08DRB - - 70477	ESIA		$ 50.00
	☒ All fees have been collected	- -	CMF		$ 20.00
	☒ All case #s are assigned	- -			$
NA	☐ AGIS copy has been sent	- -			$
	☒ Case history #s are listed	- -			$
NA	☐ Site is within 1000ft of a landfill	- -			$
NA	☐ F.H.D.P. density bonus				Total
NA	☐ F.H.D.P. fee rebate	Hearing date November 19, 2008			$ 70.00

11.5.08
Planner signature / date

Project # 1003417

FORM V: SUBDIVISION VARIANCES & VACATIONS

☐ **BULK LAND VARIANCE (DRB04)** **(PUBLIC HEARING CASE)**
- __ Application for Minor Plat on FORM S-3, including those submittal requirements. **24 copies**
- __ Letter briefly describing and explaining: the request, compliance with the Development Process Manual, and all improvements to be waived.
- __ Notice on the proposed Plat that there are conditions to subsequent subdivision (refer to DPM)
- __ Office of Community & Neighborhood Coordination inquiry response, notifying letter, certified mail receipts
- __ Sign Posting Agreement
- __ Fee (see schedule)
- __ List any original and/or related file numbers on the cover application

DRB Public hearings are approximately 30 DAYS after the filing deadline. Your attendance is required.

☐ **VACATION OF PUBLIC EASEMENT (DRB27)**
☐ **VACATION OF PUBLIC RIGHT-OF-WAY (DRB28)**
- __ The complete document which created the public easement (folded to fit into an 8.5" by 14" pocket) **24 copies.** (Not required for City owned public right-of-way.)
- __ Drawing showing the easement or right-of-way to be vacated, etc. (not to exceed 8.5" by 11") **24 copies**
- __ Zone Atlas map with the entire property(ies) clearly outlined
- __ Letter briefly describing, explaining, and justifying the request
- __ Office of Community & Neighborhood Coordination inquiry response, notifying letter, certified mail receipts
- __ Sign Posting Agreement
- __ Fee (see schedule)
- __ List any original and/or related file numbers on the cover application

Unless the vacation is shown on a DRB approved plat recorded by the County Clerk within one year, it will expire.
DRB Public hearings are approximately 30 DAYS after the filing deadline. Your attendance is required.

☐ **SIDEWALK VARIANCE (DRB20)**
☐ **SIDEWALK WAIVER (DRB21)**
- __ Scale drawing showing the proposed variance or waiver (not to exceed 8.5" by 14") **6 copies**
- __ Zone Atlas map with the entire property(ies) clearly outlined
- __ Letter briefly describing, explaining, and justifying the variance or waiver
- __ List any original and/or related file numbers on the cover application

DRB meetings are approximately 8 DAYS after the Tuesday noon filing deadline. Your attendance is required.

☐ **SUBDIVISION DESIGN VARIANCE FROM MINIMUM DPM STANDARDS (DRB25)**
- __ Scale drawing showing the location of the proposed variance or waiver (not to exceed 8.5" by 14") **24 copies**
- __ Zone Atlas map with the entire property(ies) clearly outlined
- __ Letter briefly describing, explaining, and justifying the variance
- __ Office of Community & Neighborhood Coordination inquiry response, notifying letter, certified mail receipts
- __ Sign Posting Agreement
- __ Fee (see schedule)
- __ List any original and/or related file numbers on the cover application

DRB meetings are approximately 30 DAYS after the filing deadline. Your attendance is required.

☐ **TEMPORARY DEFERRAL OF SIDEWALK CONSTRUCTION (DRB19)**
☑ **EXTENSION OF THE SIA FOR TEMPORARY DEFERRAL OF SIDEWALK CONSTRUCTION (DRB07)**
- __ Drawing showing the sidewalks subject to the proposed deferral or extension (not to exceed 8.5" by 14") **6 copies**
- X Zone Atlas map with the entire property(ies) clearly outlined
- X Letter briefly describing, explaining, and justifying the deferral or extension
- X List any original and/or related file numbers on the cover application

DRB meetings are approximately 8 DAYS after the Tuesday noon filing deadline. Your attendance is required.

☐ **VACATION OF PRIVATE EASEMENT (DRB26)**
☐ **VACATION OF RECORDED PLAT (DRB29)**
- __ The complete document which created the private easement/recorded plat (not to exceed 8.5" by 14") **6 copies**
- __ Scale drawing showing the easement to be vacated (8.5" by 11") **6 copies**
- __ Zone Atlas map with the entire property(ies) clearly outlined
- __ Letter/documents briefly describing, explaining, and justifying the vacation **6 copies**
- __ Letter of authorization from the grantors and the beneficiaries (private easement only)
- __ Fee (see schedule)
- __ List any original and/or related file numbers on the cover application

Unless the vacation is shown on a DRB approved plat recorded by the County Clerk within one year, it will expire.
DRB meetings are approximately 8 DAYS after the Tuesday noon filing deadline. Your attendance is required.

I, the applicant, acknowledge that any information required but not submitted with this application will likely result in deferral of actions.

GREGORY J. KRENIK
Applicant name (print)

10-30-08
Applicant signature / date

Form revised 4/07

☑ Checklists complete
☑ Fees collected
☑ Case #s assigned
☑ Related #s listed

Application case numbers
08DRB-_____-70477
_____-_____-_____
_____-_____-_____

11.5.08
Planner signature / date

Project # 1003417

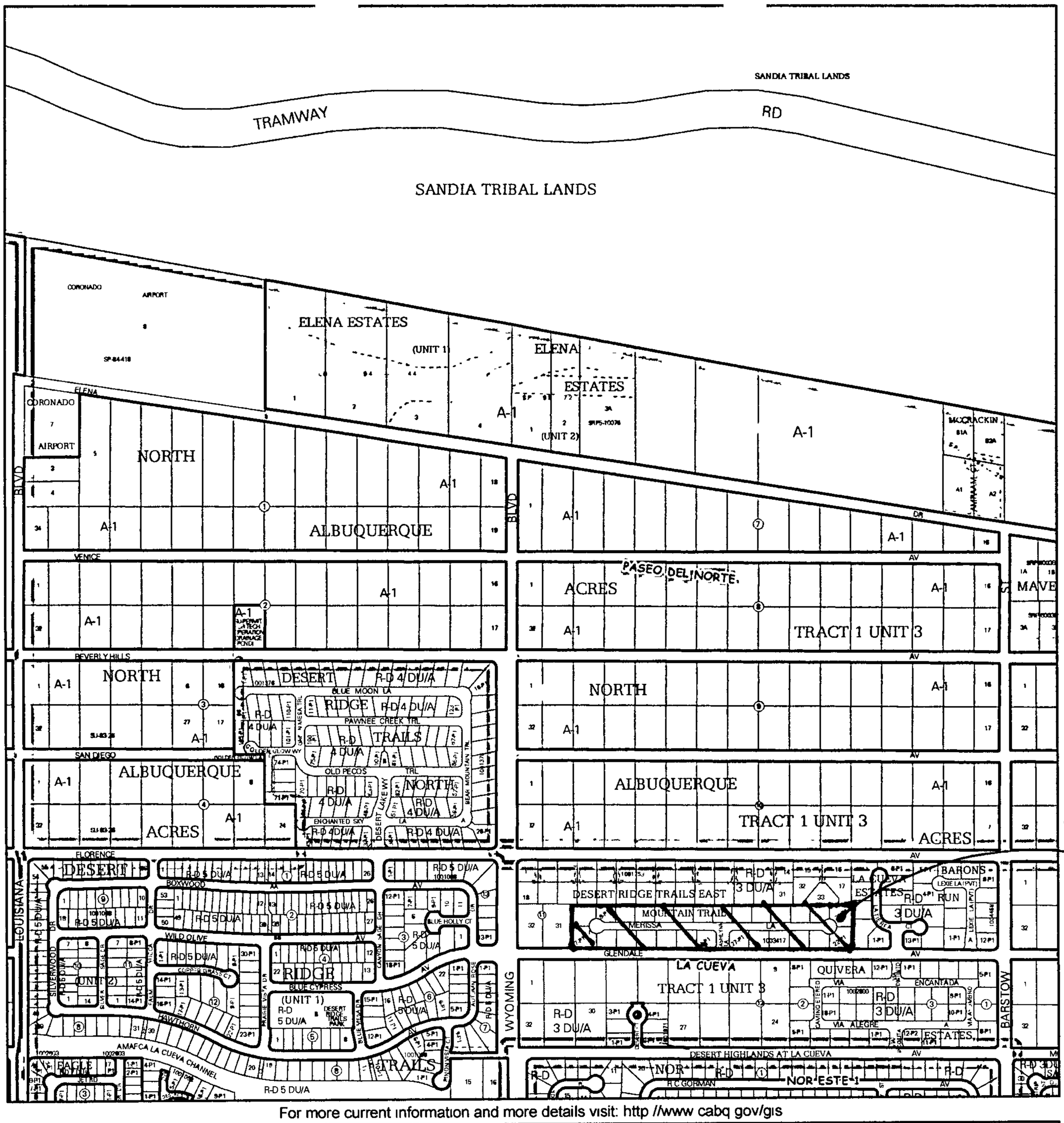

For more current information and more details visit: http //www cabq gov/gis

Albuquerque Geographic Information System

Map amended through: 6/13/2008

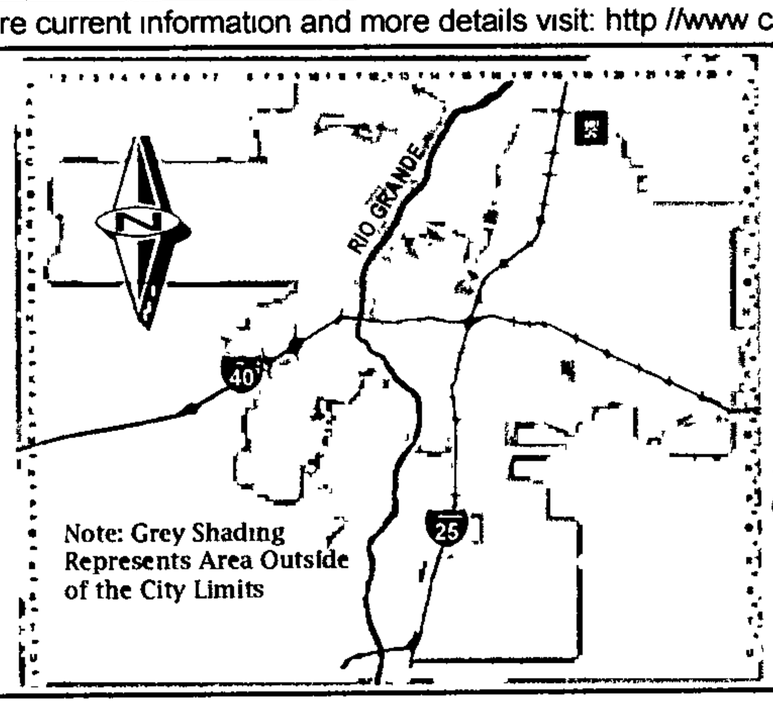

Zone Atlas Page:

B-19-Z

Selected Symbols

- SECTOR PLANS
- Design Overlay Zones
- City Historic Zones
- H-1 Buffer Zone
- Petroglyph Mon
- Escarpment
- 2 Mile Airport Zone
- Airport Noise Contours
- Wall Overlay Zone

0 750 1,500 Feet

Mountain Trails
UPC Numbers

101906536305641001
101906535305641002
101906534205641003
101906533105641004
101906532005641005
101906531005641006
101906529805741007
101906529806941008
101906530907041009
101906532007041010
101906533007041011
101906534107041012
101906535107041013
101906536107041014
101906537107041015
101906538207041016
101906539207041017
101906540207041018
101906541307041019
101906542407041020
101906543506941021
101906543505741022
101906542305641023
101906541305641024
101906540205641025
101906539105641026
101906538005641027

D. Mark Goodwin & Associates, P.A.
Consulting Engineers
P.O. BOX 90606, ALBUQUERQUE,NM 87199
(505) 828-2200 FAX 797-9539

~ 2008 ACEC/NM Award Winner for Engineering Excellence, Small Firm ~

October 30, 2008

Mr. Jack Cloud
DRB Chair
City of Albuquerque
PO Box 1293
Albuquerque, NM 87103

Re: Mountain Trail – 1003417

Dear Mr. Cloud:

We are requesting a 2 year extension of the sidewalk deferral for this project. The owner has not built all the homes and wishes to extend the SIA for the sidewalks. An exhibit showing the remaining sidewalk is attached.

Please contact our office if you have any questions.

Sincerely,

MARK GOODWIN & ASSOCIATES, PA

Gregory J. Kronik, PE
Vice President

GJK/sr

City of Albuquerque Planning Department

One Stop Shop – Development and Building Services

11/05/2008 Issued By: E08375

Permit Number: **2008 070 477** **Category Code 910**

Application Number: **08DRB-70477**, Ext Of Sia For Temp Defr Sdwk Const

Address:

Location Description: GLENDALE AVE NE BETWEEN WYOMING AND BARSTOW

Project Number: 1003417

Applicant
Quivera 2, Llc

100 Gold Sw Suite 209
Albuquerque NM 87120
922-9411

Agent / Contact
Mark Goodwin And Associates Pa
Mark Goodwin
P.O. Box 90606
Albuquerque NM 87199

mark@goodwinengineers.com

Application Fees

441018/4971000	Public Notification	
441032/3424000	Conflict Mgmt Fee	$20.00
441006/4983000	DRB Actions	$50.00
	TOTAL:	**$70.00**

City Of Albuquerque
Treasury Division

11/5/2008 10:08AM LOC: ANNX
WS# 007 TRANS# 0002
RECEIPT# 00106168-00106168
PERMIT# 200807047 7 TRSLJS
Trans Amt $70.00
Conflict Manag. Fee $20.00
DRB Actions $50.00
CK $70.00
CHANGE $0.00

Thank You

Current DRC Project Number: ~~ORIGINAL~~

#12

FIGURE 12

INFRASTRUCTURE LIST

Date Submitted: 8/2/04
Date Site Plan Approved:
Date Preliminary Plat Approved: 8/4/04
Date Preliminary Plat Expires: 8/4/05
DRB Project No.: 1003417
DRB Application No.: 04-01056

1 8-18-04 NAME CHANGE
2 10-13-04 SDWKS
3 2-23-05 SUBD NAME CHANGE

EXHIBIT "A"
TO SUBDIVISION IMPROVEMENTS AGREEMENT
DEVELOPMENT REVIEW BOARD (D.R.B.) REQUIRED INFRASTRUCTURE LIST

MOUNTAIN ~~RIDGE~~ Trail SUBDIVISION
PROPOSED NAME OF PLAT AND/OR SITE DEVELOPMENT PLAN 4

Lots 22-30, Tract 1, Block 11, Unit 3, North Albuquerque Acres
EXISTING LEGAL DESCRIPTION PRIOR TO PLATTING ACTION

Following is a summary of PUBLIC/PRIVATE Infrastructure required to be constructed or financially guaranteed for the above development. This Listing is not necessarily a complete listing. During the SIA process and/or in the review of the construction drawings, if the DRC Chair determines that appurtenant items and/or unforeseen items have not been included in the infrastructure listing, the DRC Chair may include those items in the listing and related financial guarantee. Likewise, if the DRC Chair determines that appurtenant or non-essential items can be deleted from the listing, those items may be deleted as well as the related portions of the financial guarantees. All such revisions require approval by the DRC Chair, the User Department and agent/owner If such approvals are obtained, these revisions to the listing will be incorporated administratively. In addition, any unforeseen items which arise during construction which are necessary to complete the project and which normally are the Subdivider's responsibility will be required as a condition of project acceptance and close out by the City

SIA Sequence #	COA DRC Project #	Size	Type of Improvement	Location	From	To	Private Inspector	City Inspector	City Cnst Engineer
			PAVING						
		28" FF Private ~~5.88'~~ 4'	Res Pvmt C & G (Both Sides) Sidewalk (Both Sides) (1) SDWK AROUND CUL DE SACS	1 MERISSA ~~Niki~~ Lane	East Terminus	West Terminus	/	/	/
		50' FF Private 4'	Res Pvmt C & G (Both Sides) Sidewalk (Both Sides)	Ashlynn Lane	1 MERISSA ~~Niki~~ Lane	Glendale Ave	/	/	/
		24' F-E 6'	Perm Pvmt C & G (North Side) Sidewalk (North Side)	Glendale Avenue	East Prop Line	West Prop Line	/	/	/
		24' E-E 6'	4" Temp Paving Sidewalk	Glendale Avenue	West Property Line	Wyoming Blvd	/	/	/
				40' Private Pedestrian 1	~~Niki~~ Lane	Glendale Ave	/	/	/
		6'	Sidewalk	Access Easment 1 MERISSA 15' Private Pedestrian 1 MERISSA Access Easment	~~Niki~~ Lane	Glendale Ave	/	/	/
			WATER						
		6" 6" 6" 8" 12"	Waterline Waterline Waterline Waterline (2) Waterline (2)	1 MERISSA ~~Niki~~ Lane 15' WL Easement MERISSA 40' SAS, SD, WL Esmt MERISSA 1 Glendale Ave Barstow St	1 East Terminus ~~Niki~~ Lane ~~Niki~~ Lane Wyoming Blvd Glendale Ave	West Terminus Glendale Ave Glendale Ave Barstow St Modesto Ave	/ / / / /	/ / / / /	/ / / / /
			SAS						
		8"	SAS	1 MERISSA ~~Niki~~ Lane	East Terminus	West Terminus	/	/	/

A04022

revised 07/01/01

ORIGINAL

Project name: Mountain Ridge Subdivision

SIA Sequence #	COA DRC Project #	Size	Type of Improvement	Location	From	To	Private Inspector	City Inspector	City Cnst Engineer
		8"	SAS	40' SAS, SD, WL Esmt	~~Niki~~ MERISSA Lane	Glendale Ave	/	/	/
		8"	SAS (2)	Glendale Ave	Wyoming Blvd	East Prop Line			
			STORM DRAIN						
		18"	Storm Drain	~~Niki~~ MERISSA Lane	Lot 5, Block 1	West Terminus	/	/	/
		24"	Storm Drain	40' SAS, SD, WL Esmt	~~Niki~~ MERISSA Lane	Glendale Ave	/	/	/
		78", 84" & 96"	Storm Drain (2)	Glendale Avenue	East Prop Line	Wyoming Boulevard			

1. Sidewalks to be deferred
2. Financially Guaranteed w/. COA Project # 729781
3. Water infrastructure to include valves, fittings, valveboxes and fire hydrants.
4. Sanitary sewer to include manholes and service connections.
5. Storm Drain to includes inlets, manholes
6. Grading & Drainage Certification per DPM including Perimeter walls as shown on the Grading Plan for Release of SIA and Financial Guarantees. Financial Guarantee is not required for this item
7. Street lights per DPM

AGENT / OWNER

Gregory J. Krenik, PE
NAME (print)

MARK GOODWIN & ASSOCIATES
FIRM

8-2-04
SIGNATURE - date

MAXIMUM TIME ALLOWED TO CONSTRUCT THE IMPROVEMENTS WITHOUT A DRB EXTENSION: _____

DEVELOPMENT REVIEW BOARD MEMBER APPROVALS

BA 2/23/05 — DRB CHAIR - date 8/4/04

Christina Sandoval 8/4/04 — PARKS & GENERAL SERVICES - date CS 8/18/04 CS 2/23/05

8/18/04 — TRANSPORTATION DEVELOPMENT - date 8-4-04 8-9-04 NA 2-23-05 NA

8/18/04 — AMAFCA - date

8/4/04 RB 2/23/04 — UTILITY DEVELOPMENT - date

_____ - date

Bob 8/18/04 — CITY ENGINEER - date 8/4/04 2/23/05

_____ - date

DESIGN REVIEW COMMITTEE REVISIONS

REVISION	DATE	DRC CHAIR	USER DEPARTMENT	AGENT /OWNER
2	10/13/04			

A04022

revised 07/01/01

Current DRC Project Number: ~~ORIGINAL~~

FIGURE 12

INFRASTRUCTURE LIST

Date Submitted: 8/2/04
Date Site Plan Approved:
Date Preliminary Plat Approved: 8/4/04
Date Preliminary Plat Expires: 8/4/05
DRB Project No.: 1003417
DRB Application No. 04-01056
1 8-18-04 NAME CHANGE
2 10-13-04 SDWKS

EXHIBIT "A"
TO SUBDIVISION IMPROVEMENTS AGREEMENT
DEVELOPMENT REVIEW BOARD (D.R.B.) REQUIRED INFRASTRUCTURE LIST

MOUNTAIN ~~RIDGE~~ TRAIL SUBDIVISION
PROPOSED NAME OF PLAT AND/OR SITE DEVELOPMENT PLAN

Lots 22-30, Tract 1, Block 11, Unit 3, North Albuquerque Acres
EXISTING LEGAL DESCRIPTION PRIOR TO PLATTING ACTION

Following is a summary of PUBLIC/PRIVATE Infrastructure required to be constructed or financially guaranteed for the above development. This Listing is not necessarily a complete listing. During the SIA process and/or in the review of the construction drawings, if the DRC Chair determines that appurtenant items and/or unforeseen items have not been included in the infrastructure listing, the DRC Chair may include those items in the listing and related financial guarantee. Likewise, if the DRC Chair determines that appurtenant or non-essential items can be deleted from the listing, those items may be deleted as well as the related portions of the financial guarantees. All such revisions require approval by the DRC Chair, the User Department and agent/owner. If such approvals are obtained, these revisions to the listing will be incorporated administratively. In addition, any unforeseen items which arise during construction which are necessary to complete the project and which normally are the Subdivider's responsibility will be required as a condition of project acceptance and close out by the City.

SIA Sequence #	COA DRC Project #	Size	Type of Improvement	Location	From	To	Private Inspector	City Inspector	City Cnst Engineer
			PAVING						
		28" FF Private 2 ~~5.88'~~ 41'	Res Pvmt C & G (Both Sides) Sidewalk (Both Sides) (1) SDWK AROUND CUL DE SACS	1 MERISSA ~~Niki~~ Lane	East Terminus	West Terminus	/	/	/
		50' FF Private 4'	Res Pvmt C & G (Both Sides) Sidewalk (Both Sides)	Ashlynn Lane	1 MERISSA ~~Niki~~ Lane	Glendale Ave	/	/	/
		24' F-E	Perm Pvmt C & G (North Side) 6' Sidewalk (North Side)	Glendale Avenue	East Prop Line	West Prop Line	/	/	/
		24' E-E 6'	4" Temp Paving Sidewalk	Glendale Avenue	West Property Line	Wyoming Blvd	/	/	/
				40' Private Pedestrian Access Easment	1 ~~Niki~~ Lane	Glendale Ave	/	/	/
		6'	Sidewalk	15' Private Pedestrian Access Easment	1 MERISSA ~~Niki~~ Lane	Glendale Ave	/	/	/
			WATER						
		6"	Waterline	1 MERISSA ~~Niki~~ Lane	East Terminus	West Terminus	/	/	/
		6"	Waterline	15' WL Easement	1 MERISSA ~~Niki~~ Lane	Glendale Ave	/	/	/
		6"	Waterline	40' SAS, SD, WL Esmt	1 MERISSA ~~Niki~~ Lane	Glendale Ave	/	/	/
		8"	Waterline (2)	Glendale Ave	Wyoming Blvd	Barstow St	/	/	/
		12"	Waterline (2)	Barstow St	Glendale Ave	Modesto Ave	/	/	/
			SAS						
		8"	SAS	1 MERISSA ~~Niki~~ Lane	East Terminus	West Terminus	/	/	/

A04022

revised 07/01/01

ORIGINAL

Project name: Mountain Ridge Subdivision

SIA Sequence #	COA DRC Project #	Size	Type of Improvement	Location	From	To	Private Inspector	City Inspector	City Cnst Engineer
		8"	SAS	40' SAS, SD, WL Esmt	1 MERISSA ~~Niki~~ Lane	Glendale Ave	/	/	/
		8"	SAS (2)	Glendale Ave	Wyoming Blvd	East Prop Line			
			STORM DRAIN						
		18"	Storm Drain	1 MERISSA ~~Niki~~ Lane	1 Lot 5, Block 1	West Terminus	/	/	/
		24"	Storm Drain	40' SAS, SD, WL Esmt	MERISSA ~~Niki~~ Lane	Glendale Ave	/	/	/
		78", 84" & 96"	Storm Drain (2)	Glendale Avenue	East Prop Line	Wyoming Boulevard			

1 Sidewalks to be deferred
2 Financially Guaranteed w/. COA Project # 729781
3 Water infrastructure to include valves, fittings, valveboxes and fire hydrants.
4 Sanitary sewer to include manholes and service connections.
5 Storm Drain to includes inlets, manholes
6 Grading & Drainage Certification per DPM including Perimeter walls as shown on the Grading Plan for Release of SIA and Financial Guarantees. Financial Guarantee is not required for this item
7 Street lights per DPM

AGENT / OWNER

Gregory J. Krenik, PE
NAME (print)

MARK GOODWIN & ASSOCIATES
FIRM

8-2-04
SIGNATURE - date

MAXIMUM TIME ALLOWED TO CONSTRUCT THE IMPROVEMENTS WITHOUT A DRB EXTENSION: _____

DEVELOPMENT REVIEW BOARD MEMBER APPROVALS

8/4/04
DRB CHAIR - date

8/18/04
PARKS & GENERAL SERVICES - date

8-18-04 WA
8-4-04
TRANSPORTATION DEVELOPMENT - date

8/18/04
AMAFCA - date

8/4/04
UTILITY DEVELOPMENT - date

_____ - date

8/18/04
8/4/04
CITY ENGINEER - date

_____ - date

DESIGN REVIEW COMMITTEE REVISIONS

REVISION	DATE	DRC CHAIR	USER DEPARTMENT	AGENT /OWNER
2	10/13/04			

A04022

revised 07/01/01

Current DRC Project Number ORIGINAL

FIGURE 12

INFRASTRUCTURE LIST

Date Submitted: 8/2//04
Date Site Plan Approved:
Date Preliminary Plat Approved: 8/4/04
Date Preliminary Plat Expires: 8/4/05
DRB Project No.: 1003417
DRB Application No. 04-01056

1 8-18-04 NAME CHANGE
2 10-13-04 SDWKS

EXHIBIT "A"
TO SUBDIVISION IMPROVEMENTS AGREEMENT
DEVELOPMENT REVIEW BOARD (D.R.B.) REQUIRED INFRASTRUCTURE LIST

MOUNTAIN RIDGE SUBDIVISION
PROPOSED NAME OF PLAT AND/OR SITE DEVELOPMENT PLAN

Lots 22-30, Tract 1, Block 11, Unit 3, North Albuquerque Acres
EXISTING LEGAL DESCRIPTION PRIOR TO PLATTING ACTION

Following is a summary of PUBLIC/PRIVATE Infrastructure required to be constructed or financially guaranteed for the above development. This Listing is not necessarily a complete listing. During the SIA process and/or in the review of the construction drawings, if the DRC Chair determines that appurtenant items and/or unforeseen items have not been included in the infrastructure listing, the DRC Chair may include those items in the listing and related financial guarantee. Likewise, if the DRC Chair determines that appurtenant or non-essential items can be deleted from the listing, those items may be deleted as well as the related portions of the financial guarantees. All such revisions require approval by the DRC Chair, the User Department and agent/owner. If such approvals are obtained, these revisions to the listing will be incorporated administratively. In addition, any unforeseen items which arise during construction which are necessary to complete the project and which normally are the Subdivider's responsibility will be required as a condition of project acceptance and close out by the City.

SIA Sequence #	COA DRC Project #	Size	Type of Improvement	Location	From	To	Private Inspector	City Inspector	City Cnst Engineer
			PAVING						
		28" FF Private ~~5.88'~~ 4'	Res Pvmt C & G (Both Sides) Sidewalk (Both Sides) (1) SDWK AROUND CUL DE SACS	1 MERISSA ~~Niki~~ Lane	East Terminus	West Terminus	/	/	/
		50' FF Private 4'	Res Pvmt C & G (Both Sides) Sidewalk (Both Sides)	Ashlynn Lane	1 MERISSA ~~Niki~~ Lane	Glendale Ave	/	/	/
		24' F-E	Perm Pvmt C & G (North Side)	Glendale Avenue	East Prop Line	West Prop Line	/	/	/
		6'	Sidewalk (North Side)						
		24' E-E	4" Temp Paving	Glendale Avenue	West Property Line	Wyoming Blvd	/	/	/
		6'	Sidewalk	40' Private Pedestrian Access Easment	1 MERISSA ~~Niki~~ Lane	Glendale Ave	/	/	/
		6'	Sidewalk	15' Private Pedestrian Access Easment	1 MERISSA ~~Niki~~ Lane	Glendale Ave	/	/	/
			WATER						
		6"	Waterline	1 MERISSA ~~Niki~~ Lane	1 East Terminus	West Terminus	/	/	/
		6"	Waterline	15' WL Easement	MERISSA ~~Niki~~ Lane	Glendale Ave	/	/	/
		6"	Waterline	40' SAS, SD, WL Esmt	MERISSA 1 ~~Niki~~ Lane	Glendale Ave	/	/	/
		8"	Waterline (2)	Glendale Ave	Wyoming Blvd	Barstow St	/	/	/
		12"	Waterline (2)	Barstow St	Glendale Ave	Modesto Ave	/	/	/
			SAS						
		8"	SAS	1 MERISSA ~~Niki~~ Lane	East Terminus	West Terminus	/	/	/

A04022

revised 07/01/01

ORIGINAL

Project name: Mountain Ridge Subdivision

SIA Sequence #	COA DRC Project #	Size	Type of Improvement	Location	From	To	Private Inspector	City Inspector	City Cnst Engineer
		8"	SAS	40' SAS, SD, WL Esmt	1 MERISSA ~~Niki~~ Lane	Glendale Ave	/	/	/
		8"	SAS (2)	Glendale Ave	Wyoming Blvd	East Prop Line			
			STORM DRAIN						
		18"	Storm Drain	1 MERISSA ~~Niki~~ Lane	1 Lot 5, Block 1	West Terminus	/	/	/
		24"	Storm Drain	40' SAS, SD, WL Esmt	MERISSA ~~Niki~~ Lane	Glendale Ave	/	/	/
		78", 84" & 96"	Storm Drain (2)	Glendale Avenue	East Prop Line	Wyoming Boulevard			

1 Sidewalks to be deferred
2 Financially Guaranteed w/. COA Project # 729781
3 Water infrastructure to include valves, fittings, valveboxes and fire hydrants.
4 Sanitary sewer to include manholes and service connections.
5 Storm Drain to includes inlets, manholes
6 Grading & Drainage Certification per DPM including Perimeter walls as shown on the Grading Plan for Release of SIA and Financial Guarantees. Financial Guarantee is not required for this item
7 Street lights per DPM

AGENT / OWNER

Gregory J. Krenik, PE
NAME (print)

MARK GOODWIN & ASSOCIATES
FIRM

8-2-04
SIGNATURE - date

MAXIMUM TIME ALLOWED TO CONSTRUCT THE IMPROVEMENTS WITHOUT A DRB EXTENSION: _____

DEVELOPMENT REVIEW BOARD MEMBER APPROVALS

8/4/04
DRB CHAIR - date

Christina Sandoval 8/4/04 CS 8/18/04
PARKS & GENERAL SERVICES - date

8-18-04 8-4-04
TRANSPORTATION DEVELOPMENT - date

8/18/04
AMAFCA - date

8/4/04
UTILITY DEVELOPMENT - date

_____ - date

Bob 8/18/04
Bradley J. Brigham 8/4/04
CITY ENGINEER - date

_____ - date

DESIGN REVIEW COMMITTEE REVISIONS

REVISION	DATE	DRC CHAIR	USER DEPARTMENT	AGENT /OWNER
2	10/13/04			

A04022

revised 07/01/01

City of Albuquerque

DEVELOPMENT/ PLAN REVIEW APPLICATION

Supplemental form

SUBDIVISION
X Major Subdivision action
___ Minor Subdivision action
___ Vacation
___ Variance (Non-Zoning)

SITE DEVELOPMENT PLAN
___ for Subdivision Purposes
___ for Building Permit
___ IP Master Development Plan
___ Cert. of Appropriateness (LUCC)

STORM DRAINAGE
___ Storm Drainage Cost Allocation Plan

S Z **ZONING & PLANNING**
___ Annexation
___ County Submittal
V ___ EPC Submittal
___ Zone Map Amendment (Establish or Change Zoning)
P ___ Sector Plan **(Phase I, II, III)**
___ Amendment to Sector, Area, Facility or Comprehensive Plan
___ Text Amendment (Zoning Code/Sub Regs)
___ Street Name Change (Local & Collector)

L A **APPEAL / PROTEST of...**
D ___ Decision by: DRB, EPC, LUCC, Planning Director or Staff, ZHE, Zoning Board of Appeals

PRINT OR TYPE IN BLACK INK ONLY. The applicant or agent must submit the completed application in person to the Planning Department Development Services Center, 600 2nd Street NW, Albuquerque, NM 87102. Fees must be paid at the time of application. Refer to supplemental forms for submittal requirements.

APPLICANT INFORMATION:

NAME: Alpha Equities, LLC PHONE: 922-9411
ADDRESS: P.O. Box 10005 FAX: 922-9418
CITY: Albuquerque STATE NM ZIP 87184 E-MAIL:
Proprietary interest in site: Owner List all owners:
AGENT (if any): Mark Goodwin & Associates, PA PHONE: 828-2200
ADDRESS: P.O. Box 90606 FAX: 797-9539
CITY: Albuquerque STATE NM ZIP 87199 E-MAIL:

DESCRIPTION OF REQUEST: Major Subdivision: Mountain Trail-Application for Final Plat Approval; Ammended Prel. Plat, G & D & Infrastructure List Approval

Is the applicant seeking incentives pursuant to the Family Housing Development Program? ___ Yes. X No.

SITE INFORMATION: ACCURACY OF THE LEGAL DESCRIPTION IS CRUCIAL! ATTACH A SEPARATE SHEET IF NECESSARY.

Lot or Tract No. Lots 22-30, Tract 1 Block: 11 Unit: 3
Subdiv. / Addn. North Albuquerque Acres
Current Zoning: R-D3 D/UA Proposed zoning: Same
Zone Atlas page(s): B-19 No. of **existing** lots: 9 No. of **proposed** lots: 27 + 1Tract
Total area of site (acres): 9.0066 Density if applicable: dwellings per gross acre: ___ dwellings per net acre: ___
Within city limits? xYes. No___, but site is within 5 miles of the city limits.) Within 1000FT of a landfill? No
UPC No. See Attached Sheet 101906544006940211 MRGCD Map No.
LOCATION OF PROPERTY BY STREETS: On or Near: Glendale Avenue NE
Between: Wyoming Boulevard NE and Barstow STreet NE

CASE HISTORY:
List **any** current or prior case number that may be relevant to your application (Proj., App., DRB-, AX_,Z_, V_, S_, etc.): 1003417

Check-off if project was previously reviewed by Sketch Plat/Plan ?, or Pre-application Review Team ?. Date of review: 05/12/2004

SIGNATURE DATE 2-9-05
(Print) Gregory J. Krenik, P.E. ___ Applicant X Agent

FOR OFFICIAL USE ONLY Form revised 4/04

☐ **INTERNAL ROUTING**
☑ All checklists are complete
☑ All fees have been collected
☑ All case #s are assigned
☑ AGIS copy has been sent
☑ Case history #s are listed
NO Site is within 1000ft of a landfill
NO F.H.D.P. density bonus
NO F.H.D.P. fee rebate

Application case numbers	Action	S.F.	Fees
05DRB-___-00237	FP	S(3)	$ 0
05DRB-___-00238	APP	S(3)	$ 50.00
___-___-___	CMF	___	$ 20.00
___-___-___	___	___	$
___-___-___	___	___	$
			Total $ 70.00

Hearing date 2-23-05

2-10-05

Project # 1003417

FORM S(3): SUBDIVISION - D.R.B. MEETING (UNADVERTISED) OR INTERNAL ROUTING

☐ **SKETCH PLAT REVIEW AND COMMENT** **YOUR ATTENDANCE IS REQUIRED.**

__ Scale drawing of the proposed subdivision plat (folded to fit into an 8.5" by 14" pocket) **6** copies for unadvertised meetings. Sketches are not reviewed through internal routing.
__ Site sketch with measurements showing structures, parking, Bldg. setbacks, adjacent rights-of-way and street improvements, etcetera, if there is any existing land use (folded to fit into an 8.5" by 14" pocket) **6** copies.
__ Zone Atlas map with the entire property(ies) precisely and clearly outlined and crosshatched (to be photocopied)
__ Letter briefly describing, explaining, and justifying the request
__ Any original and/or related file numbers are listed on the cover application

☐ **MAJOR SUBDIVISION EXTENSION OF PRELIMINARY PLAT** **Your attendance is required.**

__ Preliminary Plat reduced to 8.5" x 11"
__ Zone Atlas map with the entire property(ies) precisely and clearly outlined and crosshatched (to be photocopied)
__ Letter briefly describing, explaining, and justifying the request
__ Copy of previous D.R.B. approved infrastructure list
__ Copy of the LATEST Official D.R.B. Notice of approval for Preliminary Plat Extension request
__ Any original and/or related file numbers are listed on the cover application
Extensions are not reviewed through internal routing.
Extension of preliminary plat approval expires after one year.

☒ **MAJOR SUBDIVISION FINAL PLAT APPROVAL** **Your attendance is required.**

✓ X Proposed Final Plat (folded to fit into an 8.5" by 14" pocket) **6** copies for unadvertised meetings, **4** copies for internal routing.
N/A Design elevations & cross sections of perimeter walls **3 copies** APPROVED AT PRELIMINARY PLAT
✓ X Zone Atlas map with the entire property(ies) precisely and clearly outlined and crosshatched (to be photocopied)
X Original Mylar drawing of the proposed plat for internal routing only. Otherwise, bring Mylar to meeting.
✓ X Property owner's and City Surveyor's signatures on the Mylar drawing
✓ X SIA financial guaranty verification
N/A Landfill disclosure and EHD signature line on the Mylar drawing if property is within a landfill buffer
✓ X Any original and/or related file numbers are listed on the cover application
Rec'd X **DXF FILE AND HARD COPY OF FINAL PLAT DATA FOR AGIS IS REQUIRED.**

☐ **MINOR SUBDIVISION PRELIMINARY / FINAL PLAT APPROVAL** **Your attendance is required.**

__ Proposed Preliminary / Final Plat (folded to fit into an 8.5" by 14" pocket) **6** copies for unadvertised meetings, **4** copies for internal routing.
__ Site sketch with measurements showing structures, parking, Bldg. setbacks, adjacent rights-of-way and street improvements, etcetera, if there is any existing land use (folded to fit into an 8.5" by 14" pocket) **6** copies.
__ Zone Atlas map with the entire property(ies) precisely and clearly outlined and crosshatched (to be photocopied)
__ Letter briefly describing, explaining, and justifying the request
__ Original Mylar drawing of the proposed plat for internal routing only. Otherwise, bring Mylar to meeting.
__ Property owner's and City Surveyor's signatures on the Mylar drawing
__ Landfill disclosure and EHD signature line on the Mylar drawing if property is within a landfill buffer
__ **Signed** Pre-Annexation Agreement if Annexation required.
__ Fee (see schedule)
__ Any original and/or related file numbers are listed on the cover application
__ Infrastructure list if required **(verify with DRB Engineer)** **NO INTERNAL ROUTING**
DXF FILE AND HARD COPY OF FINAL PLAT DATA FOR AGIS IS REQUIRED.

☒ **AMENDMENT TO PRELIMINARY PLAT (with minor changes)** **Your attendance is required.**
☒ **AMENDMENT TO INFRASTRUCTURE LIST (with minor changes)**
☒ **AMENDMENT TO GRADING PLAN (with minor changes)**

PLEASE NOTE: There are no clear distinctions between significant and minor changes with regard to subdivision amendments. Significant changes are those deemed by the DRB to require public notice and public hearing.

✓ X Proposed Amended Preliminary Plat, Infrastructure List, and/or Grading Plan (folded to fit into an 8.5" by 14" pocket) **6** copies for unadvertised meetings.
✓ X Original Preliminary Plat, Infrastructure List, and/or Grading Plan (folded to fit into an 8.5" by 14" pocket) **6** copies for unadvertised meetings
✓ X Zone Atlas map with the entire property(ies) precisely and clearly outlined and crosshatched (to be photocopied)
✓ X Letter briefly describing, explaining, and justifying the request
✓ X Original Mylar drawing of the proposed amended plat for internal routing only. Otherwise, bring Mylar to meeting.
✓ X Property owner's and City Surveyor's signatures on the Mylar drawing, if the plat is being amended
✓ X Any original and/or related file numbers are listed on the cover application
Amended preliminary plat approval expires after one year

I, the applicant, acknowledge that any information required but not submitted with this application will likely result in deferral of actions.

Gregory J. Krenik, P.E.
Applicant name (print)

2-9-05
Applicant signature / date

Form revised 11/04

☐ Checklists complete
☐ Fees collected
☐ Case #s assigned
☐ Related #s listed

Application case numbers
05DRB - _____ - 00237
05DRB - _____ - 00238
_____ - _____ - _____

2-10-05
Planner signature / date

Project # 1003417

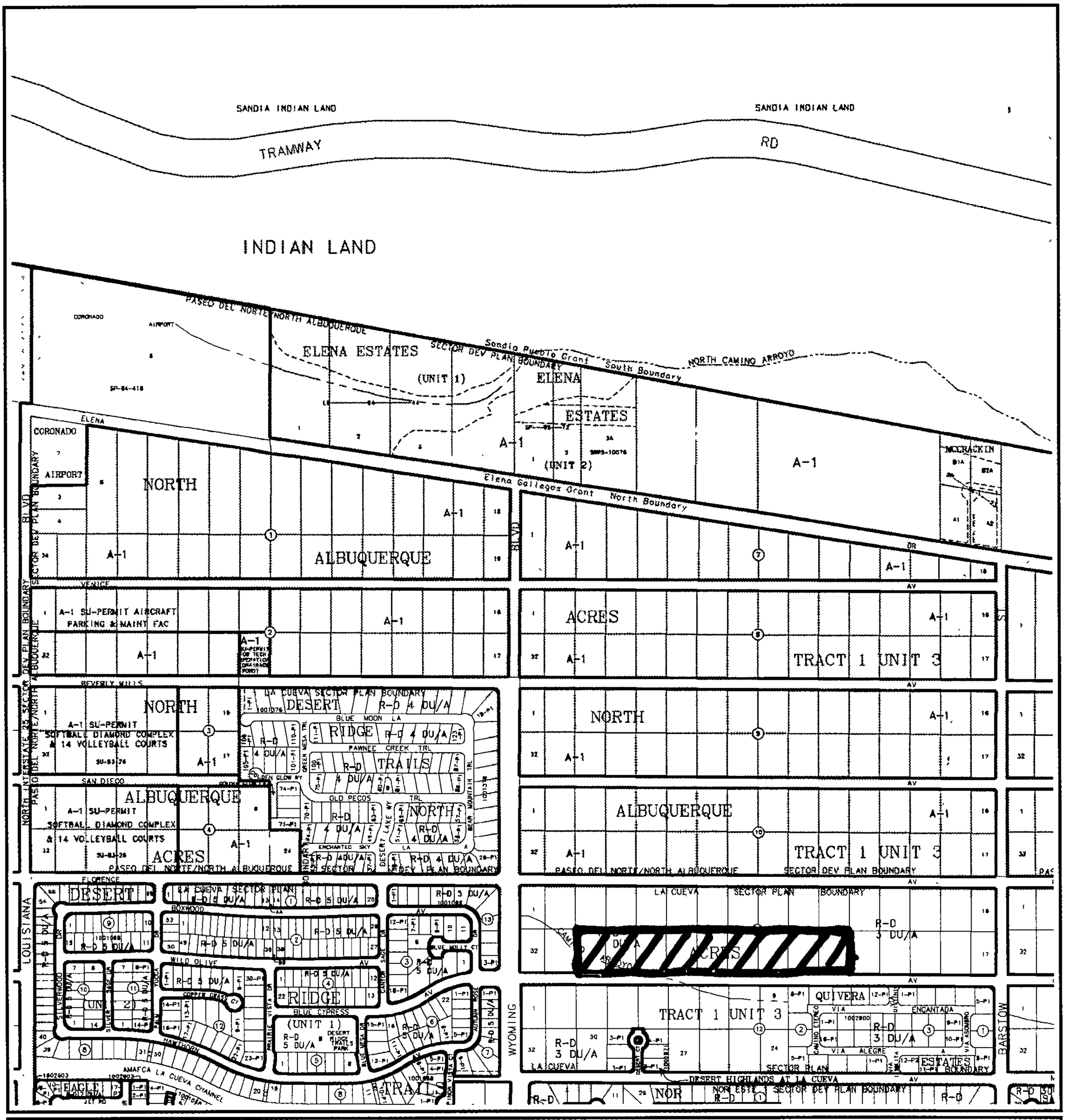
SANDIA INDIAN LAND
SANDIA INDIAN LAND
TRAMWAY
RD
INDIAN LAND
PASEO DEL NORTE/NORTH ALBUQUERQUE
ELENA ESTATES
(UNIT 1)
SECTOR DEV PLAN BOUNDARY
Sandia Pueblo Grant South Boundary
NORTH CAMINO ARROYO
ELENA ESTATES
(UNIT 2)
A-1
MCCRACKIN
Elena Gallegos Grant North Boundary
CORONADO AIRPORT
NORTH
ALBUQUERQUE
A-1 SU-PERMIT AIRCRAFT PARKING & MAINT FAC
ACRES
TRACT 1 UNIT 3
A-1 SU-PERMIT SOFTBALL DIAMOND COMPLEX & 14 VOLLEYBALL COURTS
LA CUEVA SECTOR PLAN BOUNDARY
DESERT RIDGE TRAILS
R-D 4 DU/A
BLUE MOON LA
PAWNEE CREEK TRL
OLD PECOS TRL
ENCHANTED SKY LA
DESERT RIDGE TRAILS
R-D 5 DU/A
BOXWOOD
WILD OLIVE
COPPER GRASS
BLUE CYPRESS
(UNIT 1)
DESERT RIDGE TRAILS PARK
HAWTHORN
AMAFCA LA CUEVA CHANNEL
EAGLE
LOUISIANA
WYOMING
BARSTOW
QUIVERA VIA ENCANTADA
VIA ALEGRE
ESTATES
DESERT HIGHLANDS AT LA CUEVA
SECTOR PLAN BOUNDARY
R-D 3 DU/A
NORTH ESTATES
Interstate 25
Interstate 40
River
NOTE: GREY SHADING REPRESENTS AREA OUTSIDE OF THE CITY LIMITS
CITY OF ALBUQUERQUE NEW MEXICO 1706
Albuquerque Geographic Information System
PLANNING DEPARTMENT
© Copyright 2004
GRAPHIC SCALE IN FEET
250 0 750 1000
Zone Atlas Page
B-19-Z
Map Amended through December 03, 2004

D. Mark Goodwin & Associates, P.A.
Consulting Engineers
P.O. BOX 90606, ALBUQUERQUE,NM 87199
(505) 828-2200 FAX 797-9539

December 20, 2004

Ms. Sheran Matson, Chair
Design Review Board
City of Albuquerque
PO Box 1293
Albuquerque, NM 87103

Re: Mountain Trail Subdivision (DRB # 1003417)

Dear Ms. Matson:

The owner wished to amend the name of the preliminary plat per the City Surveyors request. It appears the original name of Mountain Ridge Subdivision was already used. We are submitting the preliminary plat, grading & drainage plan, and infrastructure list for the 2nd amendment. We wish this to be heard concurrently with the Final Plat.

Sincerely,

MARK GOODWIN & ASSOCIATES, PA

Gregory J. Krenik, P.E.
Vice President

GJK/bg

f:\a04022-Mountain Trail\DRB ltr FP & amended PP IL GD.doc

UPC CODES:

Mountain Trail

1019065440069402 11
1019065424069402 10
1019065407069402 09
1019065389069402 08
1019065373069402 07
1019065356069402 06
1019065340068402 05
1019065324068402 04
1019065307068402 03

1st AMENDMENT TO AGREEMENT TO
CONSTRUCT SUBDIVISION IMPROVEMENTS
Mountain Trail

City Project # 745981

WHEREAS, the City and the Subdivider entered into an Agreement to Construct Public and/or Private Subdivision Improvements ("Original Agreement") on January 6, 2005, which was recorded on January 7, 2005, in the records of the Bernalillo County Clerk at Book A-90, pages 3254 thru 3254, wherein the Subdivider agreed to satisfactorily construct certain infrastructure improvements.

WHEREAS, the Subdivider has requested final plat approval of its plat identified as MOUNTAIN TRAIL; and

WHEREAS, the Subdivider is required to financially guarantee the construction of the public and/or private infrastructure; and

WHEREAS, the Subdivider is able to provide the required financial guaranty.

THEREFORE, the Subdivider and the City agree to amend the Original Agreement as follows:

1. Amending Section 5, FINANCIAL GUARANTY, second paragraph, to read as follows:

To meet the Subdivision Ordinance requirements, the Subdivider has acquired or is able to acquire the following "Financial Guaranty:"

Type of Financial Guaranty: Letter of Credit #1623
Amount: $ 467,982.36
Name of Financial Institution or Surety providing Guaranty: Los Alamos National Bank
Date City first able to call guaranty: October 22, 2005
Construction Completion Deadline: October 22, 2005
If guaranty other than a Bond, last day City is able to call on Guaranty is: December 22, 2005.
Additional information:

2. Other Terms Unchanged: Except as amended herein, the terms and conditions of the Original Agreement will remain unchanged and will continue in full force and effect unless there is a conflict between the terms and conditions of this Amendment, and the terms and conditions of the Original Agreement, in which case the terms and conditions of the Amendment to the Original Agreement will control.

07/02

2005015194
6211236
Page: 1 of 2
02/01/2005 11:38A
Bk-A91 Pg-5136
Mary Herrera Bern. Co. AMND R 11.00

ONE STOP SHOP
CITY OF ALBUQUERQUE PLANNING DEPARTMENT
Development & Building Services

PAID RECEIPT

APPLICANT NAME Alpha Equities

AGENT Mark Goodwin & Assoc

ADDRESS PO Box 90606

PROJECT & APP # 1003417 / 05DRB 00237/00238

PROJECT NAME Mountain Trail

$ 20.00 **441032/3424000 Conflict Management Fee**

$ 50.00 **441006/4983000 DRB Actions**

$ _____ **441006/4971000 EPC/AA/LUCC Actions & All Appeals**

$ _____ **441018/4971000 Public Notification**

$ _____ **441006/4983000 DRAINAGE PLAN REVIEW OR TRAFFIC IMPACT STUDY*****
( )Major/Minor Subdivision ( )Site Development Plan ( )Bldg Permit
( ) Letter of Map Revision ( )Conditional Letter of Map Revision
( ) Traffic Impact Study

$ 70.00 **TOTAL AMOUNT DUE**

******NOTE: If a subsequent submittal is required, bring a copy of this paid receipt with you to avoid an additional charge.***

QUIVERA II, LLC
8813 SECOND STREET NW, SUITE E
ALBUQUERQUE, NM 87114

1007

95-101/1070

2/9/05
DATE

PAY TO THE ORDER OF City of Albuquerque $ 70
Treasury Division
Seventy dollars & No/100 DOLLARS

Los Alamos National Bank
Smart Banking.
PO Box 60 Los Alamos, NM 87544 (505) 662-5171

FOR $70.00

⑆107001012⑆1007⑈0027483 6⑈01 24 Misc

© HARLAND 2001

DUPLICATE

2/10/2005 10:32AM LUC ANNX
RECEIPT# 00359 0016
Account 41032
Activity 24000
Trans Amt $70.00
Counterreceipt.d

2/10/2005 10:32AM LUC ANNX
RECEIPT# 00035972 WS# 008 TRANS# 016
Account 441006 Fund 0110
Activity 4983000 TRANS AM
Trans Amt $70.00
Misc 15 0.00
70.00
CHANGE 0.00
Thank You

3417

DXF Electronic Approval Form

DRB Project Case #: 1003417

Subdivision Name: MOUNTAIN TRAIL

Surveyor: TIMOTHY ALDRICH

Contact Person: J SCOTT DAVIS

Contact Information: 797-9539 (FAX)

DXF Received: 12/13/2004 Hard Copy Received: 12/27/2004

Coordinate System: NMSP Grid (NAD 27)

Approved 12/28/04 Date

* The DXF file cannot be accepted (at this time) for the following reason(s):

AGIS Use Only

Copied cov **3417** to agiscov on **12/28/2004** Contact person notified on **12/28/2004**

OFFICIAL NOTICE OF DECISION

CITY OF ALBUQUERQUE
PLANNING DEPARTMENT
DEVELOPMENT REVIEW BOARD

August 18, 2004

9. Project # 1003417
04DRB-01232 Minor-Amnd Prelim Plat Approval

MARK GOODWIN & ASSOCIATES agent(s) for QUIVERA 2, LLC request(s) the above action(s) for all or a portion of Lot(s) 22-30, Block(s) 11, Tract(s) 1, **NORTH ALBUQUERQUE ACRES, UNIT 3 (to be known as MOUNTAIN RIDGE SUBDIVISION),** zoned R-D residential and related uses zone, developing area, located on GLENDALE AVE NE, between WYOMING BLVD NE and BARSTOW ST NE containing approximately 10 acre(s). [REF: O4DRB-01056] (B-19)

At the August 18, 2004, Development Review Board meeting, the amended infrastructure list dated 8/18/04 was approved. The amended preliminary plat was approved. This amendment does not extend the expiration date of the already approved preliminary plat.

If you wish to appeal this decision, you must do so by September 2, 2004 in the manner described below.

Appeal is to the Environmental Planning Commission. Any person aggrieved with any determination of the Development Review Board may file an appeal on the Planning Division form, to the Planning Division, within 15 days of the Development Review Board's decision. The date the determination in question is issued is not included in the 15-day period for filing an appeal. If the fifteenth day falls on a Saturday, Sunday or holiday as listed in the Merit System Ordinance, the next working day is considered as the deadline for filing the appeal. Such appeal shall be heard within 60 days of its filing.

You will receive notice if any other person files an appeal. Successful applicants are reminded that other requirements of the City must be complied with, even after approval of the referenced application(s).

Sheran Matson

Sheran Matson, AICP, DRB Chair

Cc:Quivera 2, LLC, P.O. Box 10005, 87184
Mark Goodwin & Associates PA, P.O. Box 90606, 87199
Marilyn Maldonado, Planning Department, 4th Floor, Plaza del Sol Bldg.
Scott Howell, Property Management, Legal Dept./4th Flr, City/County Bldg
File

DEVELOPMENT REVIEW BOARD
ACTION SHEET
Plaza del Sol Hearing Room, Basement, Plaza del Sol Building

August 18, 2004 9:00 a.m.

MEMBERS:

Sheran Matson, AICP, DRB Chair
Claire Senova, Administrative Assistant

Wilfred Gallegos, Transportation Development
Brad Bingham, Alternate City Engineer
Roger Green, Utility Development
Christina Sandoval, Parks & Recreation

****

NOTE: UNLESS ANNOUNCED DURING THE MEETING, THE DEVELOPMENT REVIEW BOARD WILL NOT TAKE A LUNCH BREAK.

NOTE: INDIVIDUALS WITH DISABILITIES WHO NEED SPECIAL ASSISTANCE TO PARTICIPATE AT THIS MEETING SHOULD CONTACT CLAIRE SENOVA, PLANNING DEPARTMENT, AT 924-3946. HEARING IMPAIRED USERS MAY CONTACT HER VIA THE NEW MEXICO RELAY NETWORK BY CALLING TOLL-FREE:1-800-659-8331.

NOTE: REQUESTS FOR DEFERRAL OF CASES WILL BE DISCUSSED BY THE BOARD AND THE APPLICANT AND/OR AGENT AT THE BEGINNING OF THE AGENDA. BOTH PARTIES MUST AGREE UPON THE DATE OF DEFERRAL. IF THE APPLICANT/AGENT IS NOT PRESENT, THE ADMINISTRATIVE ASSISTANT MUST RECEIVE A LETTER, PRIOR TO THE HEARING DATE, REQUESTING A SPECIFIC DEFERRAL DATE. THE BOARD WILL DISCUSS AND MAKE A DECISION AT THE HEARING. THE APPLICANT/AGENT WILL THEN BE INFORMED OF THE DEFERRAL DATE AND REASON.

A. Call to Order: 9:00 a.m. Adjourned: 10:55 a.m.
B. Changes and/or Additions to the Agenda
C. New or Old Business

CASES WHICH REQUIRE PUBLIC NOTIFICATION
MAJOR SUBDIVISIONS, VACATIONS, SIA EXTENSIONS AND SITE DEVELOPMENT PLANS

1. **Project # 1003572**
04DRB-01143 Major-SiteDev Plan BldPermit
04DRB-01142 Major-SiteDev Plan Subd

CLAUDIO VIGIL ARCHITECTS agent(s) for BRUNACINI DEVELOPMENT LTD CO request(s) the above action(s) for all or a portion of Lot(s) A, JOURNAL CENTER, PHASE 2, UNIT 2, (to be known as **BRUNACINI @ JOURNAL CENTER**, zoned IP industrial park zone, located on RUTLEDGE RD NE, between NORTH DIVERSION CHANNEL and BARTLETT ST NE containing approximately 15 acre(s). [REF: DRB-95-268] [Listed as Project #1000633 in error] *[Deferred from 8/18/04]* (D-16) **DEFERRED AT THE AGENT'S REQUEST TO 8/25/04.**

2. **Project # 1003080**
04DRB-01146 Major-Preliminary Plat Approval
04DRB-01147 Minor-Sidewalk Waiver
04DRB-01149 Minor-Temp Defer SDWK
04DRB-01148 Minor-Subd Design (DPM) Variance

MARK GOODWIN & ASSOCIATES PA agent(s) for BROWN & ASSOCIATES request(s) the above action(s) for all or a portion of Tract(s) A, **BERNARDO TRAILS, UNIT 4,** zoned R-T residential zone, located on the northeast corner of VISTA DEL NORTE DR NE and LAS LOMITAS DR NE and containing approximately 6 acre(s). [REF: 04DRB-00591, O3EPC-01851] (D-16) **WITH THE SIGNING OF THE INFRASTRUCTURE LIST DATED 8/18/04 AND APPROVAL OF THE GRADING PLAN ENGINEER STAMP DATED 6/10/04 THE PRELIMINARY PLAT WAS APPROVED WITH A CONDITION OF FINAL PLAT: A VACATION OF THE DRAINAGE EASEMENT AT TWISTED BRANCH IS REQUIRED. A SIDEWALK VARIANCE FOR WAIVER OF SIDEWALKS WAS APPROVED AS SHOWN ON EXHIBIT C IN THE PLANNING FILE. THE TEMPORARY DEFERRAL OF CONSTRUCTION OF SIDEWALKS ON THE INTERIOR STREETS WAS APPROVED AS SHOWN ON EXHIBIT C IN THE PLANNING FILE. THE SUBDIVISION DESIGN VARIANCE WAS WITHDRAWN AT THE AGENT'S REQUEST.**

3. **Project # 1003568**
04DRB-01131 Major-Vacation of Public Easements

RHOMBUS PA, INC. agent(s) for MIGUEL SHERMAN request(s) the above action(s) for all or a portion of Lot(s) 44, **SANDIA HILLS SUBDIVISION,** zoned SU-1 special neighborhood zone, for PRD, located on NARCISCO ST NE, east of LOMAS BLVD NE and south of MONTE VERDE DR NE containing approximately 1 acre(s). [REF: DRB-94-135, DRB-93-391, Z-81-46] (J-23) **THE VACATION WAS APPROVED A SHOWN ON EXHIBIT B IN THE PLANNING FILE.**

4.	**Project # 1003366** 04DRB-00912 Major-Vacation of Pub Right-of-Way	ADVANCED ENGINEERING AND CONSULTING LLC, agent(s) for SHARIF (FELIX) RABADI request(s) the above action(s) for all or a portion of Tract(s) T-1A-2, **TOWN OF ALAMEDA GRANT,** zoned SU-1 FOR PRD, located on GOLF COURSE RD NW, between IRVING NW and CALABACILLAS ARROYO containing approximately 9 acre(s). [REF: 04EPC-00498, 04DRB-00596, Z-80-74, AX-85-20, Z-93-131, DRB-94-146, V-96-89] *[Deferred from 7/14/04 & Indefinitely deferred on 7/21/04] (No new submittal)* (B-12) **THE VACATION WAS APPROVED AS SHOWN ON EXHIBIT B IN THE PLANNING FILE WITH ADDED CONDITION: THE PLAT WILL SHOW THE PUBLIC ROADWAY EASEMENT IS 10 FEET FROM THE CURB.**
	04DRB-01242 Minor-SiteDev Plan BldPermit/EPC	ADVANCED ENGINEERING & CONSULTING LLC agent(s) for SHARIF (FELIX) RABADI request(s) the above action(s) for all or a portion of Tract(s) T-1A-2, **TOWN OF ALAMEDA GRANT, (to be known as RABADI COMPLEX,** zoned SU-1 FOR PRD, located on GOLF COURSE RD NW, between IRVING NW and CALABACILLAS ARROYO containing approximately 9 acre(s). [REF: 04EPC-00498, SPBP, Z-80-74, AX-80-16, Z-85-84, AX-85-20, Z-93-131, DRB-94-146, V-96-89] **[Juanita Vigil, EPC Case Planner]** (B-12) **THE SITE PLAN FOR BUILDING PERMIT WAS APPROVED WITH FINAL SIGN OFF DELEGATED TO CITY ENGINEER FOR SIA AND PLANNING FOR CHANGES TO THE SITE PLAN AND AN INFRASTRUCTURE LIST STATEMENT. AN INFRASTRUCTURE LIST DATED 8/18/04 WAS APPROVED.**

5. **Project # 1002196**
04DRB-00873 Major-Preliminary Plat Approval
04DRB-00877 Minor-Sidewalk Waiver
04DRB-00875 Minor-Temp Defer SDWK

WAYJOHN SURVEYING INC. agent(s) for DRAGON FLY DEVELOPMENT INC. request(s) the above action(s) for all or a portion of Tract(s) 1-B, TOWN OF ATRISCO GRANT UNIT 6, **LOS ANTEPASADOS SUBDIVISION** zoned SU-1 PRD, for MH 10 du/net acre special use zone, located on SUNSET GARDENS RD SW, between CORREGIDOR PL SW and SANTA CLARA CEMETERY SW containing approximately 6 acre(s). [REF: DRB-91-385, 02EPC-01356, 03EPC-02048, 04CC-00130] *[Deferred from 6/30/04, 7/14/04 & Indefinitely Deferred on 7/21/04] (No new submittal)* (K-11) **WITH THE SIGNING OF THE INFRASTRUCTURE LIST DATED 8/18/04 AND APPROVAL OF THE GRADING PLAN ENGINEER STAMP DATED 7/14/04 THE PRELIMINARY PLAT WAS APPROVED WITH THE CONDITION OF FINAL PLAT: THE MAINTENANCE AND REPAIR EASEMENTS SHALL BE SHOWN ON THE FINAL PLAT FOR THE ZERO LOT LINE LOTS. A SIDEWALK VARIANCE FOR WAIVER OF SIDEWALKS WAS APPROVED AS SHOWN ON EXHIBIT C IN THE PLANNING FILE. THE TEMPORARY DEFERRAL OF CONSTRUCTION OF SIDEWALKS ON THE INTERIOR STREETS WAS APPROVED AS SHOWN ON EXHIBIT C IN THE PLANNING FILE.**

04DRB-01000 Minor-SiteDev Plan Subd/EPC

WAYJOHN SURVEYING INC agent(s) for DRAGON FLY DEVELOPMENT INC request(s) the above action(s) for all or a portion of Tract(s) 1-B, TOWN OF ATRISCO GRANT, UNIT 6, **LOS ANTEPASADOS SUBDIVISION** zoned SU-1 PRD, for special use zone, located on SUNSET GARDENS RD SW, between CORREGIDOR PL SW and SANTA CLARA CEMETARY SW containing approximately 6 acre(s). [REF: DRB-91-385, 02EPC01356, 03EPC02048, 04CC00130] **[Elvira Lopez, EPC Case Planner]** *[Deferred from 7/14/04 & Indefinitely Deferred on 7/21/04] (No new submittal)* (K-11) **THE SITE PLAN FOR SUBDIVISION WAS APPROVED WITH FINAL SIGNOFF DELEGATED TO TRANSPORTATION DEVELOPMENT FOR OFF STREET PARKING CRITERIA TO FOLLOW P1 DESIGNATION PER ZONING CODE AND PLANNING FOR REVISED DESIGN REGS PER COMMENTS, ZERO LOT LINE NOTE ON SITE PLAN FOR SUBDIVISION, THREE (3) COPIES OF WALL DESIGN (SEE FILE) AND AEHD SIGNATURE.**

SITE DEVELOPMENT PLANS (EPC FINAL SIGN-OFF) AMENDED PLANS AND MASTER DEVELOPMENT PLANS (CITY COUNCIL FINAL SIGN-OFF)

NOTE: IF THE APPLICANT/AGENT IS NOT PRESENT WHEN THEIR REQUEST IS CALLED, THEN THE REQUEST MAY BE INDEFINITELY DEFERRED ON A NO SHOW.

6. **Project # 1000300**
04DRB-01238 Minor-SiteDev Plan BldPermit/EPC

CONSENSUS PLANNING INC agent(s) for AUTO ZONE INC request(s) the above action(s) for all or a portion of Tract(s) A-2-A, **MONTGOMERY CROSSING ADDITION, PHASE 3,** zoned SU-1 FOR C-1 AND O-1, located on MONTGOMERY BLVD NE, between GEN. CHENNAULT ST NE and MOON ST NE containing approximately 1 acre(s). [REF: Z-67-1, DRB--99-330, Z-99-140, 04EPC-00858] **[Russell Brito, EPC Case Planner for Eric Morgan]** (G-20) **THE SITE PLAN FOR BUILDING PERMIT WAS APPROVED WITH FINAL SIGN OFF DELEGATED TO TRANSPORTATION DEVELOPMENT FOR SHARED PARKING AGREEMENT AND CROSS-ACCESS DIMENSIONS AND PLANNING FOR MISCELLANEOUS COMMENTS.**

7. **Project # 1001899**
04DRB-01240 Minor-SiteDev Plan Subd/EPC
04DRB-01239 Minor-Prelim&Final Plat Approval
04DRB-01241 Minor-Temp Defer SDWK

BRASHER & LORENZ agent(s) for TIPTON & ASSOCIATES, INC request(s) the above action(s) for all or a portion of Tract(s) 7, LA VILLITA, (to be known as **VILLAS TUSCANO**) zoned SU-1 FOR PRD, located on LA VILLITA RD NE, between CANDELARIA NE and TRAMWAY BLVD NE containing approximately 2 acre(s). [REF: 04EPC00697, 04DRB 00248, DRB 98-84, DRB-99-233] **[Carmen Marrone, EPC Case Planner]** (H-23) **SITE PLAN FOR SUBDIVISION WAS APPROVED AND SIGNED OFF BY THE BOARD. WITH THE SIGNING OF THE INFRASTRUCTURE LIST DATED 8/18/04 AND APPROVAL OF THE GRADING PLAN ENGINEER STAMP DATED 8/6/04 THE PRELIMINARY PLAT WAS APPROVED WITH CONDITIONS: PROVIDE P1 LOT DESIGNATIONS AND PROVIDE A COPY OF THE RECORDED AGREEMENT. THE FINAL PLAT WAS INDEFINITELY DEFERRED FOR THE SIA. THE TEMPORARY DEFERRAL OF CONSTRUCTION OF SIDEWALKS ON THE INTERIOR STREETS WAS APPROVED AS SHOWN ON EXHIBIT C IN THE PLANNING FILE.**

8. **Project # 1003372**
04DRB-01234 Minor-SiteDev Plan Subd
04DRB-01236 Minor-SiteDev Plan BldPermit

DEKKER/PERICH/SABATINI agent(s) for TIM OTT request(s) the above action(s) for all or a portion of Lot(s) 30-A, Block(s) 11, Tract(s) A, **NORTH ALBUQUERQUE ACRES, UNIT B**, zoned SU-2 FOR M-1, located on ALAMEDA BLVD NE, between SAN MATEO BLVD NE and I-25 containing approximately 1 acre(s). [REF: 03DRB00092, DRB-96-352] *[Deferred from 8/18/04]* (C-18) **THE SITE PLAN FOR BUILDING PERMIT WAS WITHDRAWN AT THE AGENT'S REQUEST. THE SITE PLAN FOR SUBDIVISION WAS DEFERRED AT THE AGENT'S REQUEST TO 9/8/04.**

MINOR PLATS, FINAL (MAJOR) PLATS, AMENDED PLATS AND PLANS

9. **Project # 1003417**
04DRB-01232 Minor-Amnd Prelim Plat Approval

MARK GOODWIN & ASSOCIATES agent(s) for QUIVERA 2, LLC request(s) the above action(s) for all or a portion of Lot(s) 22-30, Block(s) 11, Tract(s) 1, **NORTH ALBUQUERQUE ACRES, UNIT 3 (to be known as MOUNTAIN RIDGE SUBDIVISION),** zoned R-D residential and related uses zone, developing area, located on GLENDALE AVE NE, between WYOMING BLVD NE and BARSTOW ST NE containing approximately 10 acre(s). [REF: O4DRB-01056] (B-19) **THE AMENDED INFRASTRUCTURE LIST DATED 8/18/04 WAS APPROVED. THE AMENDED PRELIMINARY PLAT WAS APPROVED. THIS AMENDMENT DOES NOT EXTEND THE EXPIRATION DATE OF THE ALREADY APPROVED PRELIMINARY PLAT.**

10. **Project # 1003605**
04DRB-01235 Minor-Prelim&Final Plat Approval

WILKS COMPANY agent(s) for RENEE ANN FREEMAN-WILFON request(s) the above action(s) for all or a portion of Lot(s) 1 & 2, Block(s) 4, **RIDGE PARK SUBDIVISION,** zoned SU-1 special use zone, located on INDIAN SCHOOL RD NE, between MADISON NE and QUINCY NE containing approximately 1 acre(s). (J-17) **THE PRELIMINARY AND FINAL PLAT WERE APPROVED AND SIGNED OFF BY THE BOARD.**

11. **Project # 1003112**
04DRB-01005 Major-Final Plat Approval

COMMUNITY SCIENCES CORP agent(s) for COLLATZ INC, JACK CLIFFORD request(s) the above action(s) for all or a portion of Tract(s) A, LANDS OF COLLATZ INC, **RINCONADA TRAILS,** zoned SU-1 special use zone, located on UNSER BLVD NW, between UNSER BLVD NW and WESTERN TRAILS NW containing approximately 9 acre(s). [REF: 03DRB-01994, 04DRB-00166, 04DRB-00167, 04DRB-00168] *[Deferred from 7/14/04,7/21/04, 8/4/04,8/11/04 & 8/18/04]* (F-11/F-12) **DEFERRED AT THE AGENT'S REQUEST TO 9/1/04.**

NO ACTION IS TAKEN ON THESE CASES:
APPLICANT - AGENT IS REQUIRED TO BE AT THE MEETING

12. **Project # 1003604**
04DRB-01233 Minor-Sketch Plat or Plan

ABQ ENGINEERING INC agent(s) for TERRY CORLIS request(s) the above action(s) for all or a portion of Lot(s) 217-220, **TOWN OF ATRISCO GRANT, AIRPORT UNIT 2,** zoned R-2 residential zone, located on 68TH ST NW between HANOVER RD NW and GLENRIO RD NW containing approximately 13 acre(s). (J-10) **THE ABOVE REQUEST WAS REVIEWED AND COMMENTS WERE GIVEN.**

13. **Project # 1003606**
04DRB-01237 Minor-Sketch Plat or Plan

MARK GOODWIN & ASSOCIATES PA agent(s) for WESTLAND DEVELOPMENT CO., INC request(s) the above action(s) for all or a portion of Lot(s) J09-26 & J0927, 19W, ROW 7; Lot(s) 12B, Tract(s) L, and a portion of Endee Road, TOWN OF ATRISCO GRANT UNIT A, WESTLAND NORTH SUBDIVISION, **SUNDORO SOUTH, UNIT 5,** zoned SU-2, RLT, located on LADERA DR NW, between 94th ST NW and 90th ST NW containing approximately 22 acre(s). (J-9) **THE ABOVE REQUEST WAS REVIEWED AND COMMENTS WERE GIVEN.**

14. Approval of the Development Review Board Minutes for August 4, 2004. **THE DEVELOPMENT REVIEW BOARD MINUTES DATED AUGUST 4, 2004 WERE APPROVED BY THE BOARD.**

ADJOURNED: 10:55 A.M.

CITY OF ALBUQUERQUE
PLANNING DEPARTMENT
August 18, 2004
DRB Comments

ITEM # 9

PROJECT # 1003417 APPLICATION # 04-01232

RE: Mountain Ridge /amend. prelim. plat

Planning has no objection to the amended infrastructure list or preliminary plat. Remember this amendment does not extend the original one year expiration date of the preliminary plat.

Sheran Matson, AICP DRB Chair
924-3880 Fax 924-3864 smatson@cabq.gov

CITY OF ALBUQUERQUE

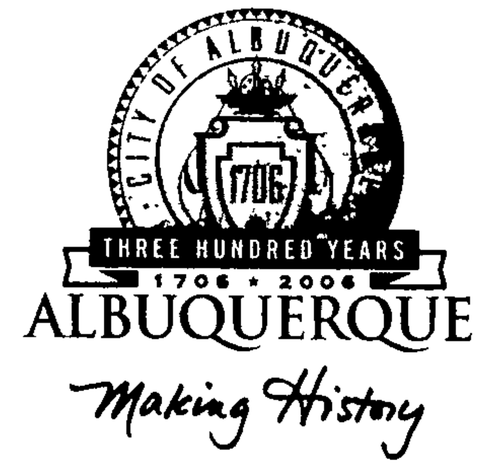

PLANNING DEPARTMENT
DEVELOPMENT AND BUILDING SERVICES
HYDROLOGY DEVELOPMENT SECTION

DEVELOPMENT REVIEW BOARD--SPEED MEMO

DRB CASE NO/PROJECT NO: 1003417 **AGENDA ITEM NO: 9**

SUBJECT:

(01) Sketch Plat/Plan	**(05)** Site Plan for Subd	**(10)** Sector Dev Plan
(02) Bulk Land Variance	**(06)** Site Plan for BP	**(11)** Grading Plan
(03) Sidewalk Variance	**(07)** Vacation	**(12)** SIA Extension
(03a) Sidewalk Deferral	**(08)** Final Plat	**(13)** Master Dev. Plan
(04) Preliminary Plat AND	**(09)** Infrastructure List	**(14)** Cost Allocation Plan

ACTION REQUESTED:

REV/CMT:() APP:(x) SIGN-OFF:() EXTN:() AMEND:()

ENGINEERING COMMENTS:

The Hydrology Section has no objection to the subject request.

RESOLUTION:

APPROVED X; DENIED ____; DEFERRED ____; COMMENTS PROVIDED ___; WITHDRAWN

SIGNED-OFF: **(SEC-PLN) (SP-SUB) (SP-BP) (FP)** BY: **(UD) (CE) (TRANS) (PKS) (PLNG)**

DELEGATED: **(SEC-PLN) (SP-SUB) (SP-BP) (FP)** TO: **(UD) (CE) (TRANS) (PKS) (PLNG)**

FOR:

SIGNED: Bradley L. Bingham
City Engineer/AMAFCA Designee

DATE: August 18, 2004

P.O. Box 1293
Albuquerque
New Mexico 87103
www.cabq.gov

OFFICIAL NOTICE OF DECISION

CITY OF ALBUQUERQUE
PLANNING DEPARTMENT
DEVELOPMENT REVIEW BOARD

August 4, 2004

3. Project # 1003417
04DRB-01056 Major-Preliminary Plat Approval
04DRB-01057 Minor-Subd Design (DPM) Variance
04DRB-01058 Minor-Temp Defer SDWK

MARK GOODWIN & ASSOCIATES, PA agent(s) for ALPHA EQUITIES, LLC request(s) the above action(s) for all or a portion of Lot(s) 22-30, Block(s) 11, Tract(s) 1, NORTH ALBUQUERQUE ACRES, UNIT 3, (to be known as **MOUNTAIN RIDGE SUBDIVISION,** zoned R-D residential and related uses zone, developing area, (3DU/A) located on GLENDALE AVE NE, between WYOMING BLVD NE and BARSTOW ST NE containing approximately 10 acre(s). [REF: 04DRB00671] *[Deferred from 7/28/04]* (B-19)

At the August 4, 2004, Development Review Board meeting, with the signing of the infrastructure list dated 8/4/04 and approval of the grading plan engineer stamp dated 8/2/04 the preliminary plat was approved.

A sidewalk variance from the design standards was approved as shown on Exhibit C in the Planning file.

The temporary deferral of construction of sidewalks on the interior streets was approved as shown on Exhibit C in the Planning file.

If you wish to appeal this decision, you must do so by August 19, 2004 in the manner described below.

Appeal is to the Environmental Planning Commission. Any person aggrieved with any determination of the Development Review Board may file an appeal on the Planning Division form, to the Planning Division, within 15 days of the Development Review Board's decision. The date the determination in question is issued is not included in the 15-day period for filing an appeal. If the fifteenth day falls on a Saturday, Sunday or holiday as listed in the Merit System Ordinance, the next working day is considered as the deadline for filing the appeal. Such appeal shall be heard within 60 days of its filing.

You will receive notice if any other person files an appeal. Successful applicants are reminded that other requirements of the City must be complied with, even after approval of the referenced application(s).

Please note that a Preliminary Plat approval date is the date of the DRB action plus the 15-day appeal period. The Preliminary Plat approval is effective one year from that date. The DRB must take action on the Preliminary Plat Extension prior to the expiration of the approval or the Preliminary Plat approval is null and void. (REF: Chapter 14 Article 14 Part 3-4 (E) Revised Ordinance.)

Sheran Matson, AICP, DRB Chair

Cc: Alpha Equities LLC, P.O. Box 10005, 87184
Mark Goodwin & Associates PA, P.O. Box 90606, 87199
Marilyn Maldonado, Planning Department, 4th Floor, Plaza del Sol Bldg.
Scott Howell, Property Management, Legal Dept./4th Flr, City/County Bldg
File

Sheran A. Matson
07/27/04 03:44 PM

To: <lhines@sandiapueblo.nsn.us>
cc:
cc: "Sheran Matson" <smatson@cabq.gov>, "Mike Ferguson" <mferguson@sandiapueblo.nsn.us>, "Sharon Hausam" <shausam@sandiapueblo.nsn.us>
Subject: Re: Drainage Issues on Sandia Pueblo Private Land Holdings

I asked Brad Bingham to get in touch with you. He is the City Hydologist.

"Loren Hines" <lhines@sandiapueblo.nsn.us>
07/27/04 02:47 PM
Please respond to lhines

To: "Sheran Matson" <smatson@cabq.gov>
cc: "Mike Ferguson" <mferguson@sandiapueblo.nsn.us>, "Sharon Hausam" <shausam@sandiapueblo.nsn.us>
Subject: Drainage Issues on Sandia Pueblo Private Land Holdings

Sheran Matson, Chair
Development Review Board
Planning Department
City of Albuquerque

Dear Sheran:

I was contemplating attending the DRB Hearing tomorrow to air a complaint. As the Realty Officer for the Pueblo of Sandia, I have the responsibility of managing Pueblo lands held in fee simple ownership. Much of this land is south of the Pueblo's Grant Boundary and within the City Limits of Albuquerque. Some of the lands are in Bernalillo County, outside of the Albuquerque City Limits. You will be hearing a case tomorrow (Project #1003417) for an area known as Quivera Estates, Unit 2. This property lies immediately east of two parcels (lots 31 & 32 of the same block and tract) owned jointly by the Pueblo and Mesa Verde Development. There has been extensive grading on the Pueblo's property over the last couple of weeks, with no consultation with the Pueblo. To the west of this development, where Beverly Hills intersects with Louisiana NE, more excavation was done on Pueblo owned land, with no consultation with the Pueblo. This was reported to A.M.A.F.C.A. as the drainage was flowing from land in the county onto land in the City. I am getting the distinct impression that developers may be taking as gospel the saying that it is easier to obtain forgiveness than approval. If notice is being given in advance regarding these activities, I am not aware of it. The only notices that I see are of the hearings.

I am sure that in both instances mentioned above, the developer will claim that they have magnanimously made improvements to our benefit. We are certainly capable of participating in discussions regarding the use and improvement of Pueblo owned land. As the owners of the former Coronado Airport, we participated in the construction of the La Cueva Channel improvements to the benefit of our property and others. Now we see development taking place to the east with no apparent solution other than some onsite ponding, some diversion to the La Cueva Channel and an increase in developed flows that impact the former airport property. Any assistance you can provide in curtailing these incursions onto private property would be greatly appreciated.

Very truly yours,
Loren J. Hines
Realty Officer
Pueblo of Sandia
771-5079

```
**********************
***   TX REPORT   ***
**********************

TRANSMISSION OK

TX/RX NO                1814
CONNECTION TEL                        97979539
SUBADDRESS
CONNECTION ID
ST. TIME                07/16 14:54
USAGE T                 01'07
PGS.                      2
RESULT                  OK
```

CITY OF ALBUQUERQUE
PLANNING DEPARTMENT
FAX FORM

TO: Mark Goodwin **FAX #** 797-9539
Greg Krenek

 # PAGES (INCLUDING COVER SHEET) 2

FROM: Sheran Matson, DRB Chair FAX # 924-3864 PHONE # 924-3880

1003417 Mtn. Ridge
7/16/04

COMMENTS:

Planning's comments

Project # 1002529
04DRB-01059 Major-Preliminary Plat Approval
04DRB-01060 Minor-SiteDev Plan Subd/EPC

CONSENSUS PLANNING INC agent(s) for RANDY EASTBURG, CAS, LLC request(s) the above action(s) for all or a portion of Tract(s) 6-B, Lot(s) 1 thru 5, **PARTITION OF BLACK RANCH,** zoned SU-1 special use zone for C-1, located on COORS BLVD NW, between WESTSIDE DR NW and CALABACILLAS ARROYO containing approximately 6 acre(s). [REF: 03EPC02058,03EPC 02059,03EPC 02060, Z- 93-115] **[Makita Hill, EPC Case Planner]** (B-13)

In the future, be sure the current zoning is listed on the preliminary plat per the Subdivision Ordinance. It should also be on the final plat.

The Subdivision Ordinance also requires additional language above the owner's signature: "Said owner warrants that he/she holds complete & indefeasible title in fee simple to the land subdivided." In the future, this language must be on the preliminary plat & also on the final plat.

The word "City" is misspelled in two places on the plat where it precedes the word "Surveyor". Please correct on the final plat.

Why are junipers included on the approved plats list? Who maintains the landscape buffer? A LMA may be required. If so, it should be listed on the Infrastructure List as well as the water meter for irrigation of the buffer.

Project # 1003417
04DRB-01056 Major-Preliminary Plat Approval
04DRB-01057 Minor-Subd Design (DPM) Variance
04DRB-01058 Minor-Temp Defer SDWK

MARK GOODWIN & ASSOCIATES, PA agent(s) for ALPHA EQUITIES, LLC request(s) the above action(s) for all or a portion of Lot(s) 22-30, Block(s) 11, Tract(s) 1, NORTH ALBUQUERQUE ACRES, UNIT 3, MOUNTAIN RIDGE SUBDIVISION (to be known as **QUIVERA ESTATES, UNIT 2,** zoned R-D residential and related uses zone, developing area, (3DU/A) located on GLENDALE AVE NE, between WYOMING BLVD NE and BARSTOW ST NE containing approximately 10 acre(s). [REF: 04DRB00671] (B-19)

The wall design is fine once it is re-submitted with the entire triangular pattern showing on the elevation. Part of it is obliterated with dimensions. Type A & B look identical ? The zoning should always be listed on the preliminary & final plat per the Subdivision Ordinance.

DEVELOPMENT REVIEW BOARD
ACTION SHEET

Plaza del Sol Hearing Room, Basement, Plaza del Sol Building

July 28, 2004 9:00 a.m.

MEMBERS:

Sheran Matson, AICP, DRB Chair
Claire Senova, Administrative Assistant

Wilfred Gallegos, Transportation Development
Brad Bingham, Alternate City Engineer
Roger Green, Utility Development
Christina Sandoval, Parks & Recreation

****

NOTE: UNLESS ANNOUNCED DURING THE MEETING, THE DEVELOPMENT REVIEW BOARD WILL NOT TAKE A LUNCH BREAK.

NOTE: INDIVIDUALS WITH DISABILITIES WHO NEED SPECIAL ASSISTANCE TO PARTICIPATE AT THIS MEETING SHOULD CONTACT CLAIRE SENOVA, PLANNING DEPARTMENT, AT 924-3946. HEARING IMPAIRED USERS MAY CONTACT HER VIA THE NEW MEXICO RELAY NETWORK BY CALLING TOLL-FREE:1-800-659-8331.

NOTE: REQUESTS FOR DEFERRAL OF CASES WILL BE DISCUSSED BY THE BOARD AND THE APPLICANT AND/OR AGENT AT THE BEGINNING OF THE AGENDA. BOTH PARTIES MUST AGREE UPON THE DATE OF DEFERRAL. IF THE APPLICANT/AGENT IS NOT PRESENT, THE ADMINISTRATIVE ASSISTANT MUST RECEIVE A LETTER, PRIOR TO THE HEARING DATE, REQUESTING A SPECIFIC DEFERRAL DATE. THE BOARD WILL DISCUSS AND MAKE A DECISION AT THE HEARING. THE APPLICANT/AGENT WILL THEN BE INFORMED OF THE DEFERRAL DATE AND REASON.

A. Call to Order: 9:00 A.M. Adjourned: 12:35 P.M.
B. Changes and/or Additions to the Agenda
C. New or Old Business

CASES WHICH REQUIRE PUBLIC NOTIFICATION
MAJOR SUBDIVISIONS, VACATIONS, SIA EXTENSIONS AND SITE DEVELOPMENT PLANS

1. **Project # 1000583**
04DRB-01016 Major-Two Year SIA

MARK GOODWIN & ASSOCIATES PA agent(s) for PEGGY DASKALOS request(s) the above action(s) for all or a portion of Block(s) 1, Tract(s) B-1-A AND B-1-B, **FOOTHILLS NORTH,** zoned C-2 community commercial zone, located on LOMAS BLVD NE, between TRAMWAY BLVD NE and CUMBRES ST NE containing approximately 4 acre(s). [REF: 02DRB-01022, 04DRB-01707, 04DRB-01652, 04DRB-01618, 04DRB-00772] (K-23) **A TWO-YEAR EXTENSION OF THE SIA WAS APPROVED.**

2. **Project # 1003531**
04DRB-01034 Major-Street Name Change

AFRICAN AMERICAN ALLIANCE OF ALBUQUERQUE request(s) the above action(s) for a Street Name Change from **BASEHART AVENUE SE TO OWEN SMAULDING ROAD SE**, zoned SU-1, PDA, located on UNIVERSITY BLVD SE, between AVENIDA CESAR CHAVEZ SE and COAL AVE SE. (L-15) **DENIED.**

3. **Project # 1002529**
04DRB-01059 Major-Preliminary Plat Approval
04DRB-01060 Minor-SiteDev Plan Subd/EPC

CONSENSUS PLANNING INC agent(s) for RANDY EASTBURG, CAS, LLC request(s) the above action(s) for all or a portion of Tract(s) 6-B, Lot(s) 1 thru 5, **PARTITION OF BLACK RANCH,** zoned SU-1 special use zone for C-1, located on COORS BLVD NW, between WESTSIDE DR NW and CALABACILLAS ARROYO containing approximately 6 acre(s). [REF: 03EPC02058,03EPC 02059,03EPC 02060, Z- 93-115] **[Makita Hill, EPC Case Planner]** *[Deferred from 7/28/04]* (B-13) **DEFERRED AT THE AGENT'S REQUEST TO 8/4/04.**

4. **Project # 1003417**
04DRB-01056 Major-Preliminary Plat Approval
04DRB-01057 Minor-Subd Design (DPM) Variance
04DRB-01058 Minor-Temp Defer SDWK

MARK GOODWIN & ASSOCIATES, PA agent(s) for ALPHA EQUITIES, LLC request(s) the above action(s) for all or a portion of Lot(s) 22-30, Block(s) 11, Tract(s) 1, NORTH ALBUQUERQUE ACRES, UNIT 3, (to be known as **MOUNTAIN RIDGE SUBDIVISION,** zoned R-D residential and related uses zone, developing area, (3DU/A) located on GLENDALE AVE NE, between WYOMING BLVD NE and BARSTOW ST NE containing approximately 10 acre(s). [REF: 04DRB00671] *[Deferred from 7/28/04]* (B-19) **DEFERRED AT THE AGENT'S REQUEST TO 8/4/04.**

5. **Project # 1001182**
04DRB-01047 Major-Vacation of Pub Right-of-Way
04DRB-01048 Major-Vacation of Public Easements
04DRB-01049 Major-Preliminary Plat Approval
04DRB-01050 Minor-Sidewalk Waiver
04DRB-01051 Minor-Temp Defer SDWK

THOMPSON ENGINEERING & CONSULTING INC agent(s) for VISION DEVELOPMENT LLC request(s) the above action(s) for all or a portion of Tract(s) B, WESTRIDGE MOBILE HOME PARK, PHASE 2, (to be known as **BLUEWATER POINTE SUBDIVISION,** zoned R-LT residential zone, located on 94TH ST NW, between BLUEWATER RD NW and AVALON RD NW containing approximately 8 acre(s). [REF: Z-97-58, AX-97-7, Z-99-60, 01EPC-01088, 01089, 01DRB-00505, 00506,02DRB-00337] *(Deferred from 7/28/04)* (K-9) **DEFERRED AT THE AGENT'S REQUEST TO 8/4/04.**

6. **Project # 1002715**
04DRB-00964 Major-Bulk Land Variance
04DRB-00965 Major-Vacation of Pub Right-of-Way
04DRB-00966 Major-Vacation of Public Easements
04DRB-00967 Minor-Prelim&Final Plat Approval

ISAACSON & ARFMAN PA agent(s) for BOULEVARD LIMITED PARTNERSHIP request(s) the above action(s) for all or a portion of Lot(s) 1 THRU 4, Tract(s) H, **LANDS OF HORIZON CORPORATION,** zoned SU-1 FOR C-1, located on UNSER BLVD NW, between PARADISE BLVD NW and LYONS BLVD NW containing approximately 30 acre(s). [REF: 03EPC-00918, 03EPC-00919] *[Deferred from 7/14/04 & 7/28/04]* (B-11) **DEFERRED AT THE AGENT'S REQUEST TO 8/25/04.**

04DRB-01061 Minor-SiteDev Plan Subd/EPC

CONSENSUS PLANNING INC agent(s) for BOULEVARD LIMITED PARTNERSHIP request(s) the above action(s) for all or a portion of Lot(s) 1, 2, 3, & 4, **HORIZON CORPORATION REPLAT OF TRACT H,** zoned SU-1, located on PARADISE BLVD NW, between LYON BLVD NW and UNIVERSE BLVD NW containing approximately 30 acre(s). [REF: 03EPC-00918, 03EPC-00919, 04DRB00964, 00965, 00966, 00967] **[Juanita Vigil, EPC Case Planner]** *[Deferred from 7/14/04 & 7/21/04]* (B-11) **DEFERRED AT THE AGENT'S REQUEST TO 8/25/04.**

7.	**Project # 1003369** 04DRB-00514 Major-Drainage Plan to Determine the Cost Allocation for Storm Drainage Improvements	BOB KEERAN agent(s) for LLAVE CONSTRUCTION INC request(s) these action(s) for all or a portion of Unit(s) 3, Lot(s) 6 & 7, Tract(s) 3, Block(s) 16, NORTH ALBUQUERQUE ACRES, **VINTNER COURT SUBDIVISION,** zoned DETENTION POND, located on VINTNER NE, between VENTURA NE and CORONA NE containing approximately 2 acre(s). *[Deferred from 5/12/04 & 5/26/04 & 6/9/04 & 6/23/04 & 7/14/04 & 7/21/04]* (C-20) **DEFERRED AT THE AGENT'S REQUEST TO 8/11/04.**
8.	**Project # 1002176** 04DRB-00960Major-PreliminaryPlat Approval 04DRB-00962 Major-Vacation of Public Easements 04DRB-00969 Minor-Vacation of Private Easements 04DRB-00961 Minor-Temp Defer SDWK	SURVEYS SOUTHWEST LTD agent(s) for MOUNTAIN WEST DEVELOPMENT, request(s) the above action(s) for all or a portion of Tract(s) E-1, NORTH FOUR HILLS, **COVERED WAGON SUBDIVISION,** zoned SU-1, located on FOUR HILLS RD SE, between LANIER DR SE and WATERFALL DR SE containing approximately 7acre(s). [REF:Z-98-113/Z98-54, 02DRB-01306, 04DRB-00526] *[Deferred from 7/14/04 & 7/21/04]* (L-23) **WITH THE SIGNING OF THE INFRASTRUCTURE LIST DATED 7/28/04 AND APPROVAL OF THE GRADING PLAN ENGINEER STAMP DATED 6/30/04 THE PRELIMINARY PLAT WAS APPROVED. THE VACATION WAS APPROVED AS SHOWN ON EXHIBIT B IN THE PLANNING FILE. THE TEMPORARY DEFERRAL OF CONSTRUCTION OF SIDEWALKS ON THE INTERIOR STREETS WAS APPROVED AS SHOWN ON EXHIBIT C IN THE PLANNING FILE.**
	04DRB-01071 Minor-SiteDev Plan BldPermit/EPC 04DRB-01072 Minor-SiteDev Plan Subd/EPC	BILL WADE, request(s) the above action(s) for all or a portion of Tract(s) E-1 and C, Block(s) 90C, Unit(s) 78, NORTH FOUR HILLS, **COVERED WAGON SUBDIVISION,** zoned SU-1, located on CENTRAL AVE SE between FOUR HILLS RD SE AND WATERFALL DR SE containing approximately 7 acre(s). [REF:04EPC-00162, 04DRB-000960, 00961, 00962, 00969, 02DRB-01306, 02DRB-00526] **[Debbie Stover, EPC Case Planner]** *[Deferred from 7/14/04 & 7/21/04]* (L-23) **THE SITE PLAN FOR SUBDIVISION AND SITE PLAN FOR BUILDING PERMIT WERE APPROVED AND SIGNED OFF BY THE BOARD.**

SITE DEVELOPMENT PLANS (EPC FINAL SIGN-OFF) AMENDED PLANS AND MASTER DEVELOPMENT PLANS (CITY COUNCIL FINAL SIGN-OFF)

NOTE: IF THE APPLICANT/AGENT IS NOT PRESENT WHEN THEIR REQUEST IS CALLED, THEN THE REQUEST MAY BE INDEFINITELY DEFERRED ON A NO SHOW.

9. **Project # 1003524**
04DRB-01012 Minor-SiteDev Plan BldPermit

RICK BENNETT ARCHITECTS agent(s) for WASHINGTON STREET INVESTMENTS request(s) the above action(s) for all or a portion of Lot(s) 17, Tract(s) B-1-A-1, ALAMEDA BUSINESS PARK, **LANDS OF SPRINGER BUILDING MATERIALS CORP.,** zoned SU-2, IP - EP, located on VISTA ALAMEDA NW, between PASEO ALAMEDA NW and ALAMEDA PARK DR NW containing approximately 1 acre(s). *[Deferred from 7/14/04]* (C-16) **SITE PLAN FOR BUILDING PERMIT WAS APPROVED WITH FINAL SIGN OFF DELEGATED TO TRANSPORTATION DEVELOPMENT FOR ONE- WAY SIGN, CITY STANDARD DRAWING NUMBER FOR CURB CUTS AND PARALLEL INTERIOR PARKING STALLS 22 FEET AND PLANNING FOR SIGNAGE ON BUILDING.**

10. **Project # 1003548**
04DRB-01090 Minor-SiteDev Plan BldPermit

JIM MEDLEY, ARCHITECT, AIA agent(s) for TERRI ULIBARRI request(s) the above action(s) for all or a portion of Tract(s) A-1, **MARIPOSA SQUARE,** zoned R-D, located on LADERA DR NW, between 72nd ST NW and MIAMI NW containing approximately 2 acre(s). [REF: DRB-95-353, V-88-95] *[Deferred from 7/21/04]* (H-10) **INDEFINITELY DEFERRED ON A NO SHOW.**

11. **Project # 1003550**
04DRB-01094 Minor-SiteDev Plan BldPermit

DORMAN / BREEN ARCHITECTS agent(s) for ALBUQUERQUE SIGN PRINT CO. request(s) the above action(s) for all or a portion of Lot(s) 2, Block(s) 30, Tract(s) A, **NORTH ALBUQUERQUE ACRES, UNIT B,** zoned SU-2 special neighborhood zone, IP, located on SIGNAL AVE NE, between SAN PEDRO DR NE and LOUISIANA BLVD NE containing approximately 1 acre(s). *[Indef deferred 7/21/04]* (C-18) **AN INFRASTRUCTURE LIST DATED 7/28/04 WAS APPROVED. THE SITE PLAN FOR BUILDING PERMIT WS APPROVED WITH FINAL SIGN OFF DELEGATED TO CITY ENGINEER FOR SIA AND PLANNING FOR LANDSCAPE LANGUAGE ON PLAN.**

12. **Project # 1000635**
04DRB-01092 Minor-SiteDev Plan Subd/EPC
04DRB-01093 Minor-SiteDev Plan BldPermit

GEORGE RAINHART ARCHITECTS & ASSOCIATES agent(s) for DEBARTALO DEVELOPMENT INC request(s) the above action(s) for all or a portion of Tract(s) 33-1A, 38-2-A, 38-3-A, & 27B-B-1-1, **TAYLOR RANCH,** zoned SU-1 FOR C-1 PERMISSIVE & CON USE & FULL SVC LIQUOR, located on COORS BLVD NW, between COORS BLVD NW and MONTANO NW containing approximately 5 acre(s). [REF: Z-80-2, Z-80-5, Z-85-138-48, Z-96-124, DRB-98-106] **[Debbie Stover, EPC Case Planner]** *[Indef deferred 7/21/04]* (E-12) **THE SITE PLAN FOR SUBDIVISION AND SITE PLAN FOR BUILDING PERMIT WERE APPROVED WITH FINAL SIGN OFF DELEGATED TO TRANSPORTATION DEVELOPMENT FOR TRAFFIC IMPACT STUDY UPDATE**

04DRB-01121 Minor-Prelim&Final Plat Approval

PRECISION SURVEYS, INC. agent(s) for COORS & MONTANO, LLC request(s) the above action(s) for all or a portion of Tract(s) 38-1-A, 38-2-A and 38-3-A, **TAYLOR RANCH,** zoned SU-1 special use zone, FOR C-1 USES, located on MONTANO RD NW, between COORS BLVD. NW and MONTANO PLAZA DR NW containing approximately 4 acre(s). [REF: 04DRB-01092, 01093, 03DRB-00613, 03DRB-00454, 00455] (E-12) **THE PRELIMINARY PLAT WAS APPROVED WITH FINAL PLAT SIGN OFF DELEGATED TO TRANSPORTATION DEVELOPMENT FOR CROSS LOT PARKING, ACCESS, DRAINAGE AND UTILITIES DEVELOPMENT FOR AGIS DXF FILE, ADD ADDITIONAL PUBLIC WATERLINE EASEMENT ON TRACT 38-2A2 FOR METER**

13. **Project # 1002584**
04DRB-01068 Minor-SiteDev Plan BldPermit/EPC

THE DESIGN GROUP, ERIK HAGEN, agent(s) for ARDENT HEALTH SERVICES dba SANDIA HEALTH SYSTEMS, request(s) the above action(s) for all or a portion of Tract(s) 1-A, **ST JOSEPH WEST MESA HOSPITAL, PARADISE HEIGHTS,** zoned SU-1 special use zone, located on GOLF COURSE RD NW, between MCMAHON BLVD NW and GOLF COURSE RD NW containing approximately 20 acre(s). [REF: Z-88-90, 03AA00579, 04EPC00696] **[Carmen Marrone, EPC Case Planner]** *[Deferred from 7/14/04 & Indef deferred 7/21/04]* (A-12) **WITH THE SIGNING OF THE INFRASTRUCTURE LIST DATED 7/28/04 THE SITE PLAN FOR BUILDING PERMIT WS APPROVED WITH FINAL SIGN OFF DELEGATED TO CITY ENGINEER FOR SIA.**

MINOR PLATS, FINAL (MAJOR) PLATS, AMENDED PLATS AND PLANS

14. **Project # 1001096**
04DRB-01127 Minor-Extension of Preliminary Plat

SURV-TEK, INC agent(s) for STUART HARROUN request(s) the above action(s) for all or a portion of Tract(s) A-1, **LANDS OF LLOYD LUZES GOFF,** zoned RO-1 rural and open zone, located on EDITH BLVD NE, between TYLER RD NE and LAS COLINAS DR NE containing approximately 15 acre(s). [REF: 01410-0000-00294, DRB 96-40, 02DRB01421/03DRB01273] (E-16) **A ONE-YEAR EXTENSION OF THE PRELIMINARY PLAT WAS APPROVED TO SEPTEMBER 12, 2005**.

15. **Project # 1003175**
04DRB-01126 Minor-Sidewalk Waiver

BOHANNAN HUSTON, INC. agent(s) for CURB. INC. request(s) the above action(s) for all or a portion of Tract(s) 33C-1-A, **SUNGATE SUBDIVISION,** zoned R-2 residential zone, located on GIBSON BLVD SW, between BLAKE RD SW and MESA ARENOSA DR SW containing approximately 21 acre(s). [REF: 04DRB-00010, 04DRB-00011, 00012] (N-9) **A SIDEWALK VARIANCE FOR WAIVER OF SIDEWALK WAS APPROVED AS SHOWN ON EXHIBIT C IN THE PLANNING FILE.**

16. **Project # 1000184**
04DRB-01111 Minor-Prelim&Final Plat Approval
04DRB-01112 Minor-Vacation of Private Easements

SURVEYS SOUTHWEST LTD agent(s) for ROB DICKSON request(s) the above action(s) for all or a portion of Tract(s) A-1-A & A-7-A, **BANNER SQUARE ADDITION,** zoned SU-2/SU-1, located on BROADWAY BLVD NE, between CENTRAL AVE NE and ARNO ST NE containing approximately 3 acre(s). [REF: 03DRB00442] (K-14) **THE PRELIMINARY AND FINAL PLAT WERE APPROVED AND SIGNED OFF BY THE BOARD. THE VACATION WAS APPROVED AS SHOWN ON EXHIBIT B IN THE PLANNING FILE.**

17. **Project # 1001763**
04DRB-01136 Minor-Prelim&Final Plat Approval

SURVEYS SOUTHWEST LTD agent(s) for J. HOWARD MOCK, LAVA PARTNERS request(s) the above action(s) for all or a portion of Tract(s) C-1, **ALBUQUERQUE WEST,** zoned SU-1 FOR C-1 PERMISSIVE USES, located on 57TH ST NW, between QUAIL RD NW and OURAY RD NW containing approximately 2 acre(s). [REF:DRB96-279, 02DRB00308, 309, 02DRB00856] *(Deferred from 7/28/04)* (H-11) **INDEFINITELY DEFERRED AT THE AGENT'S REQUEST.**

18. **Project # 1003572**
04DRB-01135 Minor-Prelim&Final Plat Approval

SURVEYS SOUTHWEST LTD agent(s) for BRUNACINI DEVELOPMENT, ANGELO BRUNACINI request(s) the above action(s) for all or a portion of Tract(s) A, **JOURNAL CENTER PHASE 2, UNIT 2,** zoned IP industrial park zone, located on RUTLEDGE ST NE, between NORTH DIVERSION CHANNEL and SNAPROLL ST NE containing approximately 15 acre(s). *(Deferred from 7/28/04)* (D-17) **INDEFINITELY DEFERRED AT THE AGENT'S REQUEST.**

19. **Project # 1000570**
04DRB-01139 Major-Final Plat Approval

PRECISION SURVEYS INC agent(s) for WESTLAND DEVELOPMENT CO INC request(s) the above action(s) for, **PARKWAY SUBDIVISION, UNIT 10,** zoned SU-2/R-LT, located on FORTUNA RD NW, between SANDY DR NW and SHEFFIELD PL NW containing approximately 8 acre(s). [REF: 02DRB01020, 02DRB00755, 02DRB01019, 0201567, 04DRB00270] (J-9) **FINAL PLAT WAS APPROVED AND DELEGATED TO PARKS FOR CASH-IN-LIEU AND PLANNING FOR AGIS DXF FILE.**

20. **Project # 1002861**
04DRB-01137 Major-Final Plat Approval

ABQ ENGINEERING INC agent(s) for INFILL SOLUTIONS request(s) the above action(s) for all or a portion of Lot(s) 13-16, Block(s) 46, NEW MEXICO TOWN COMPANY TOWNSITE, (to be known as **SOUTHERN UNION GAS LOFTS**) zoned SU-3 special center zone, located on 8TH ST SW, between 8TH ST SW and SILVER AVE SW containing approximately 1 acre(s). [REF: 03DRB01299] (K-13) **FINAL PLAT WAS APPROVED AND DELEGATED TO PLANNING FOR AGIS DXF FILE.**

21. **Project # 1003495**
04DRB-01123 Minor-Prelim&Final Plat Approval

PAUL BENNETT request(s) the above action(s) for all or a portion of Lot(s) 18 P1, **PASEO DE ESTRELLA SUBDIVISION,** zoned R-1 residential zone, located on VISTA DEL NORTE NE, between JEFFERSON NE and EDITH NE [REF: 04DRB00932] (E-16) **PRELIMINARY AND FINAL PLAT WERE APPROVED AND SIGNED OFF BY THE BOARD.**

22. **Project # 1003505**
04DRB-01124 Minor-Prelim&Final Plat Approval

ELLIOTT SURVEYING agent(s) for ALBUQUERQUE CHRISTIAN CHILDREN'S HOME request(s) the above action(s) for all or a portion of Tract(s) A & B, **ALBUQUERQUE CHRISTIAN CHILDREN'S HOME,** zoned SU-1, located on WINTER HAVEN RD NW, between MONTANO PLAZA DR NW and MONTANO RD NW containing approximately 6 acre(s). [REF: 04DRB-00956] (E-12) **PRELIMINARY AND FINAL PLAT WERE APPROVED AND SIGNED OFF BY THE BOARD.**

23. **Project # 1003567**
04DRB-01130 Minor-Prelim&Final Plat Approval

RHOMBUS, P. A. INC agent(s) for JOANNE NEALEY request(s) the above action(s) for all or a portion of Lot(s) 29 & 30, **MC DONALD ACRES, UNIT 3,** zoned R-1 residential zone, located on PHOENIX AVE NW, between 11TH ST NW and 10TH ST NW containing approximately 1 acre(s). *(Deferred from 7/28/04)*(H-14) **DEFERRED TO 8/4/04.**

24. **Project # 1003570**
04DRB-01133 Minor-Prelim&Final Plat Approval

SURVEYING CONTROL, INC agent(s) for CITY OF ALBUQUERQUE LEGAL DEPARTMENT, REAL PROPERTY, request(s) the above action(s) for all or a portion of Tract(s) B-9E, **SEVEN BAR RANCH,** zoned SU-1 special use zone, located on ELLISON DR NW, between COORS BLVD BYPASS NW and CIBOLA LOOP NW containing approximately 17 acre(s). [REF: V-89-58] (A-13) **PRELIMINARY PLAT WAS APPROVED WITH FINAL SIGN OFF DELEGATED TO UTILITIES DEVELOPMENT FOR NMU INC AND DRY UTILITIES SIGNATURES.**

25. **Project # 1002731**
04DRB-01004 Minor-Final Plat Approval

JEFF MORTENSEN & ASSOCIATES INC agent(s) for KAY LAMB request(s) the above action(s) for all or a portion of Lot(s) 24-27, Block(s) 12, **ALBRIGHT-MOORE ADDITION,** zoned S-R, located on 6TH ST NW, between BELLAMAH AVE NW and KINLEY AVE NW containing approximately 1 acre(s). [REF: 03DRB-00966, 00967] [Final Plat was Indef. Deferred for SIA] (J-14) **FINAL PLAT WAS APPROVED AND SIGNED OFF BY THE BOARD.**

NO ACTION IS TAKEN ON THESE CASES:
APPLICANT - AGENT IS REQUIRED TO BE AT THE MEETING

26. **Project # 1003571**
04DRB-01134 Minor-Sketch Plat or Plan

MARK GOODWIN & ASSOCIATES. agent(s) for CURB INC. request(s) the above action(s) for all or a portion of Tract(s) 9-B-1, 9-B-2 & 12-A-2, ATRISCO GRANT, **EL RANCHO GRANDE, UNIT 9B,** zoned R-LT residential zone, located on BLAKE RD SW, between AMOLE CHANNEL SW and 98TH ST SW containing approximately 36 acre(s). (N-9) **THE ABOVE REQUEST WAS REVIEWED AND COMMENTS WERE GIVEN.**

27. **Project # 1003565**
04DRB-01128 Minor-Sketch Plat or Plan

WILKS CO. agent(s) for ART GARDENSWARTZ REALTY request(s) the above action(s) for all or a portion of Lot(s) 1, Block(s) 8, Unit(s) 1, **MIRAMONTES PARK,** zoned C-1 neighborhood commercial zone & C-2, located on SAN MATEO BLVD NE, between PHOENIX AVE. NE and CLAREMONT AVE. NE containing approximately 4 acre(s). [REF: ZA-88-53, (1002072)] (H-18) **THE ABOVE REQUEST WAS REVIEWED AND COMMENTS WERE GIVEN.**

28. **Project # 1003573**
04DRB-01138 Minor-Sketch Plat or Plan

RIO GRANDE ENGINEERING agent(s) for ERIMY PROPERTIES, LTD request(s) the above action(s) for all or a portion of Lot(s) 28, 29 and 30, Block(s) 2, Tract(s) 3, **NORTH ALBUQUERQUE ACRES, UNIT 3,** zoned R-D residential and related uses zone, developing area, located on OAKLAND AVE NE, between VENTURA BLVD NE and BARSTOW BLVD NE containing approximately 3 acre(s). (C-20) **THE ABOVE REQUEST WAS REVIEWED AND COMMENTS WERE GIVEN.**

29. **Project # 1003039**
04DRB-01077 Minor-Sketch Plat or Plan

RIO GRANDE ENGINEERING agent(s) for SCACCIA, LLC, request(s) the above action(s) for all or a portion of Lot(s) 1, 2 & 3, Block(s) 16, Tract(s) 3, NORTH ALBUQUERQUE ACRES, UNIT 3, (to be known as **WILSHIRE ESTATES)** zoned R-D residential and related uses zone, developing area, 5 DU/AC, located on VENTURA ST NE, between CORONA AVE NE and WILSHIRE AVE NE containing approximately 3 acre(s). [REF: 03DRB-01771, DRB-93-337] [Was Indef Deferred on 7/21/04] (C-20) **THE ABOVE REQUEST WAS REVIEWED AND COMMENTS WERE GIVEN.**

30. **Project # 1003551**
04DRB-01095 Minor-Sketch Plat or Plan

BRASHER & LORENZ agent(s) for NAYLOR REALTY request(s) the above action(s) for all or a portion of Lot(s) 12, 13, 19, 20 & 21, Block(s) 11, Tract(s) 1, **NORTH ALBUQUERQUE ACRES, UNIT 3,** zoned RD, located on GLENDALE AVE NE, between BARSTOW AVE NE and WYOMING NE containing approximately 5 acre(s). [Was Indef Deferred on 7/21/04] (B-19) **THE ABOVE REQUEST WAS REVIEWED AND COMMENTS WERE GIVEN.**

31. Approval of the Development Review Board Minutes for July 14, 2004. THE DRB MINUTES FOR JULY 14, 2004 WERE APPROVED.

ADJOURNED: 12:35 P.M.

DRB PUBLIC HEARING SIGN IN SHEETS

CASE NUMBER: 1003417 AGENDA#: 4 DATE: 7.28.04

1. Name: JOE YAROMIAN Address: 7801 R.C. Zimm Zip: 87122 Report only.
2. Name: Amy Biese Address: MRA & Assoc Zip:
3. Name: Address: Zip:
4. Name: Address: Zip:
5. Name: Address: Zip:
6. Name: Address: Zip:
7. Name: Address: Zip:
8. Name: Address: Zip:
9. Name: Address: Zip:
10. Name: Address: Zip:
11. Name: Address: Zip:
12. Name: Address: Zip:
13. Name: Address: Zip:
14. Name: Address: Zip:

CITY OF ALBUQUERQUE

THREE HUNDRED YEARS 1706 • 2006
ALBUQUERQUE
Making History

PLANNING DEPARTMENT
DEVELOPMENT AND BUILDING SERVICES
HYDROLOGY DEVELOPMENT SECTION

DEVELOPMENT REVIEW BOARD--SPEED MEMO

DRB CASE NO/PROJECT NO: 1003417 **AGENDA ITEM NO: 4**

SUBJECT:

(01) Sketch Plat/Plan
(02) Bulk Land Variance
(03) Sidewalk Variance
(03a) Sidewalk Deferral
(04) Preliminary Plat
(05) Site Plan for Subd
(06) Site Plan for BP
(07) Vacation
(08) Final Plat
(09) Infrastructure List
(10) Sector Dev Plan
(11) Grading Plan
(12) SIA Extension
(13) Master Dev. Plan
(14) Cost Allocation Plan
DPM Variance

ACTION REQUESTED:

REV/CMT:() APP:(x) SIGN-OFF:() EXTN:() AMEND:()

ENGINEERING COMMENTS:

An approved drainage report is required for Preliminary Plat approval.
An approved infrastructure list is required for Preliminary Plat approval.

RESOLUTION: 8-4-04

APPROVED ____; DENIED ____; DEFERRED X; COMMENTS PROVIDED ___; WITHDRAWN

SIGNED-OFF: **(SEC-PLN) (SP-SUB) (SP-BP) (FP)** BY: **(UD) (CE) (TRANS) (PKS) (PLNG)**

DELEGATED: **(SEC-PLN) (SP-SUB) (SP-BP) (FP)** TO: **(UD) (CE) (TRANS) (PKS) (PLNG)**

FOR:

SIGNED: Bradley L. Bingham
City Engineer/AMAFCA Designee

DATE: July 28, 2004

P.O. Box 1293
Albuquerque
New Mexico 87103
www.cabq.gov

CITY OF ALBUQUERQUE
PLANNING DEPARTMENT
DEVELOPMENT REVIEW BOARD

July 28, 2004

Project # 1003417
04DRB-01056 Major-Preliminary Plat Approval
04DRB-01057 Minor-Subd Design (DPM) Variance
04DRB-01058 Minor-Temp Defer SDWK

MARK GOODWIN & ASSOCIATES, PA agent(s) for ALPHA EQUITIES, LLC request(s) the above action(s) for all or a portion of Lot(s) 22-30, Block(s) 11, Tract(s) 1, NORTH ALBUQUERQUE ACRES, UNIT 3, (to be known as **MOUNTAIN RIDGE SUBDIVISION,** zoned R-D residential and related uses zone, developing area, (3DU/A) located on GLENDALE AVE NE, between WYOMING BLVD NE and BARSTOW ST NE containing approximately 10 acre(s). [REF: 04DRB00671] (B-19)

AMAFCA	No comment.
COG	No adverse comments.
Transit	No objection.
Zoning Enforcement	No comments received.
Neighborhood Coordination	Letter sent to Nor Este (R) Neighborhood Assn.
APS	No comments received.

Police Department

A review of following case(s) indicates the following problems or crimes may occur or that the following concerns may need to be evaluated or addressed on this site or in this area. These comments do not indicate that a thorough CPTED evaluation has been done, or that other criminal activities may not occur. Lighting issues, need for a neighborhood association, placing sidewalks on back of curbs.

Fire Department

Fire Department is not approving street widths less than 32 feet at this time. Per Ray Sanchez, AFD. All required fire hydrants shall be installed and made serviceable prior to and during construction of subdivision.

PNM Electric & Gas	Approves.
QWEST	No comments received
Environmental Health	Site is not within 1000 feet of a landfill. No comment.
M.R.G.C.D.	No comments received.
Open Space Division	No adverse comments.

City Engineer

An approved drainage report is required for Preliminary Plat approval.

Transportation Development

Sidewalks along lots 27 and 1 should be built and not deferred. No objection to DPM variance for right-of-way width and placement of sidewalk at back of curb. Will this be a gated community? If so, provide x-section of entrance. Glendale Ave. is a major local and requires a 6' sidewalk with a 6' planter area. Are there any subdivisions on the south side of Glendale? Alignment of entrance? Where are the Pedestrian access points? (There should be one at each cul-de-sac.

Parks & Recreation

This request will be subject to the following requirements of the City Park Dedication and Development Ordinance:

Prior to sign-off on the final plat, a fee in-lieu of and equal to the value of the required park land dedication for 27 new residential lots will be required. The fee will be based on an estimate of land value to be provided by the City Real Property office. Alternatively, the applicant may submit current appraisal information mutually acceptable to the applicant and the City.

The park development requirement will be met via the payment of a fee prior to issuance of building permit for each new dwelling unit.

The R-D zone requires 2,400 square feet of open space for each dwelling unit. With submittal of the Preliminary Plat/Site Development Plan, provide an Open Space Calculation Table showing the lot number, lot size, building & driveway area, provided open space, remaining open space requirement (this table can be separate from the plat itself). Provide a dimensioned Typical Lot Plan, which shows a typical lot with the building footprint and driveway (this should be on the Site Development Plan rather than the plat). Include one of the following notes on the

Parks & Recreation

Preliminary and Final Plats indicating how the total remaining open space requirement will be met:

All open space requirements are met on the lot with the dwelling per the provisions of Section 14-16-3-8 (A) (1). ining open space requirements are met via a cash payment to the City of Albuquerque per the provisions of Section 14-16-3-8 (A) (2).

Total remaining open space requirements are met via the provision of detached open space per the provisions of Section 14-16-3-8 (A) (3). **Note: This option is only applicable to land covered by a Sector Development Plan.*

Utilities Development

No objection to Preliminary Plat approval. No objection to Design Variance. No objection to Sidewalk Deferral.

Planning Department

The wall design is fine once it is re-submitted with the entire triangular pattern showing on the elevation. Part of it is obliterated with dimensions. Type A & B look identical ? The zoning should always be listed on the preliminary & final plat per the Subdivision Ordinance.

IT IS REQUIRED THAT THE APPLICANT AND/OR AGENT BE PRESENT AT THE HEARING

cc:Alpha Equities LLC, P.O. Box 10005, 87184
Mark Goodwin & Associates PA, P.O. Box 90606, 87199

PUBLIC HEARING--DEVELOPMENT REVIEW BOARD
CITY OF ALBUQUERQUE

Notice is hereby given that the Development Review Board, City of Albuquerque, will hold a public hearing in the **Plaza del Sol Hearing Room, Basement, Plaza del Sol Building, 600 2nd St NW,** on **Wednesday, July 28, 2004,** beginning at **9:00 a.m.** for the purpose of considering the following:

Project # 1000583 04DRB-01016 Major-Two Year SIA	MARK GOODWIN & ASSOCIATES PA agent(s) for PEGGY DASKALOS request(s) the above action(s) for all or a portion of Block(s) 1, Tract(s) B-1-A AND B-1-B, **FOOTHILLS NORTH,** zoned C-2 community commercial zone, located on LOMAS BLVD NE, between TRAMWAY BLVD NE and CUMBRES ST NE containing approximately 4 acre(s). [REF: 02DRB-01022, 04DRB-01707, 04DRB-01652, 04DRB-01618, 04DRB-00772] (K-23)
Project # 1003531 04DRB-01034 Major-Street Name Change	AFRICAN AMERICAN ALLIANCE OF ALBUQUERQUE request(s) the above action(s) for a Street Name Change from **BASEHART AVENUE SE TO OWEN SMAULDING ROAD SE**, zoned SU-1, PDA, located on UNIVERSITY BLVD SE, between AVENIDA CESAR CHAVEZ SE and COAL AVE SE. (L-15)
Project # 1002529 04DRB-01059 Major-Preliminary Plat Approval 04DRB-01060 Minor-SiteDev Plan Subd/EPC	CONSENSUS PLANNING INC agent(s) for RANDY EASTBURG, CAS, LLC request(s) the above action(s) for all or a portion of Tract(s) 6-B, Lot(s) 1 thru 5, **PARTITION OF BLACK RANCH,** zoned SU-1 special use zone for C-1, located on COORS BLVD NW, between WESTSIDE DR NW and CALABACILLAS ARROYO containing approximately 6 acre(s). [REF: 03EPC02058,03EPC 02059,03EPC 02060, Z- 93-115] **[Makita Hill, EPC Case Planner]** (B-13)
Project # 1003417 04DRB-01056 Major-Preliminary Plat Approval 04DRB-01057 Minor-Subd Design (DPM) Variance 04DRB-01058 Minor-Temp Defer SDWK	MARK GOODWIN & ASSOCIATES, PA agent(s) for ALPHA EQUITIES, LLC request(s) the above action(s) for all or a portion of Lot(s) 22-30, Block(s) 11, Tract(s) 1, NORTH ALBUQUERQUE ACRES, UNIT 3, MOUNTAIN RIDGE SUBDIVISION (to be known as **QUIVERA ESTATES, UNIT 2,** zoned R-D residential and related uses zone, developing area, (3DU/A) located on GLENDALE AVE NE, between WYOMING BLVD NE and BARSTOW ST NE containing approximately 10 acre(s). [REF: 04DRB00671] (B-19)

SEE PAGE 2 . . .

PUBLIC HEARING--DEVELOPMENT REVIEW BOARD
CITY OF ALBUQUERQUE

PAGE 2

Project # 1001182 04DRB-01047 Major-Vacation of Pub Right-of-Way 04DRB-01048 Major-Vacation of Public Easements 04DRB-01049 Major-Preliminary Plat Approval 04DRB-01050 Minor-Sidewalk Waiver 04DRB-01051 Minor-Temp Defer SDWK	THOMPSON ENGINEERING & CONSULTING INC., agent(s) for VISION DEVELOPMENT LLC request(s) the above action(s) for all or a portion of Tract(s) B, WESTRIDGE MOBILE HOME PARK, PHASE 2, (to be known as **BLUEWATER POINTE SUBDIVISION,** zoned R-LT residential zone, located on 94TH ST NW, between BLUEWATER RD NW and AVALON RD NW containing approximately 8 acre(s). [REF: Z-97-58, AX-97-7, Z-99-60, 01EPC-01088, 01089, 01DRB-00505, 00506,02DRB-00337] (K-9)

Details of the application(s) may be examined at the Development Services Center of the Planning Department, Second Floor, Plaza Del Sol Building, 600 2nd St NW, between 10:00 a.m. and 12:00 p.m. or 2:00 p.m. and 4:00 p.m. Monday through Friday except holidays. Individuals with disabilities who need special assistance to participate at this meeting should contact Claire Senova, Planning Department, at 924-3946. Hearing Impaired users may contact her via the New Mexico Relay Network by calling toll-free: 1-800-659-8331.

Claire Senova
for Sheran Matson, AICP, DRB Chair
Development Review Board

TO BE PUBLISHED IN THE ALBUQUERQUE JOURNAL MONDAY, JULY 12, 2004.

171

CITY OF PLANNING
PLANNING DEPARTMENT
PROPERTY OWNERSHIP LIST

Meeting Date: JULY 28, 2004
Zone Atlas Page: B-19-Z
Notification Radius: 100 Ft.

Project# ~~1002417~~ 1003417
App# 04DRB-01056
App# 04DRB-01057
App# 04DRB-01058

Cross Reference and Location:

Applicant: ALPHA EQUITIES, LLC
Address: PO BOX 10005
ALBUQUERQUE NM 87184

Agent: MARK GOODWIN & ASSOCIATES
Address: PO BOX 90606
ALBUQUERQUE NM 87199

Special Instructions:

Notice must be mailed from the City's 15 day prior to the meeting.

Date Mailed: JULY 9, 2004

Signature: KYLE TSETHLIKAI

```
101906529009140231   LEGAL: 002  011N ORTH ALBUQ ACRES TR 1 UNIT 3              L    USE:
                     PROPERTY ADDR: 00000   FLORENCE
                        OWNER NAME: SPS INVESTMENTS LC
                        OWNER ADDR: 08300   CARMEL                   AV NE ALBUQUERQUE NM      87122

101906530709140230   LEGAL: 003  011N ORTH ALBUQ ACRES TR 1 UNIT 3              LAND USE:
                     PROPERTY ADDR: 00000   FLORENCE
                        OWNER NAME: SPS INVESTMENTS LC
                        OWNER ADDR: 08300   CARMEL                   AV NE ALBUQUERQUE NM      87122

101906532409140229   LEGAL: 004  011N ORTH ALBUQ ACRES TR 1 UNIT 3              LAND USE:
                     PROPERTY ADDR: 00000   FLORENCE
                        OWNER NAME: SPS INVESTEMENTS LC
                        OWNER ADDR: 08300   CARMEL                   AV NE ALBUQUERQUE NM      87122

101906534009140228   LEGAL: 005  011N ORTH ALBUQ ACRES TR 1 UNIT 3              LAND USE:
                     PROPERTY ADDR: 00000   FLORENCE
                        OWNER NAME: SPS INVESTMENTS LC
                        OWNER ADDR: 08300   CARMEL                   AV NE ALBUQUERQUE NM      87122

101906535609240227   LEGAL: 006  011N ORTH ALBUQ ACRES TR 1 UNIT 3              LAND USE:
                     PROPERTY ADDR: 00000   FLORENCE
                        OWNER NAME: SPS INVESTMENTS LC
                        OWNER ADDR: 08300   CARMEL                   AV NE ALBUQUERQUE NM      87122

101906537309240226   LEGAL: 007  011N ORTH ALBUQ ACRES TR 1 UNIT 3              LAND USE:
                     PROPERTY ADDR: 00000   FLORENCE
                        OWNER NAME: SPS INVESTMENTS LC
                        OWNER ADDR: 08300   CARMEL                   AV NE ALBUQUERQUE NM      87122

101906538909240225   LEGAL: 008  011N ORTH ALBUQ ACRES TR 1 UNIT 3              LAND USE:
                     PROPERTY ADDR: 00000   FLORENCE
                        OWNER NAME: SPS INVESTMENTS LC
                        OWNER ADDR: 08300   CARMEL                   AV NE ALBUQUERQUE NM      87122

101906540709240224   LEGAL: 009  011N ORTH ALBUQ ACRES TR 1 UNIT 3              LAND USE:
                     PROPERTY ADDR: 00000   FLORENCE
                        OWNER NAME: SPS INVESTMENTS LC
                        OWNER ADDR: 08300   CARMEL                   AV NE ALBUQUERQUE NM      87122

101906542409240223   LEGAL: 010  011N ORTH ALBUQ ACRES TR 1 UNIT 3              LAND USE:
                     PROPERTY ADDR: 00000   FLORENCE
                        OWNER NAME: LIFE INVESTMENTS LLC
                        OWNER ADDR: 00000                                ALBUQUERQUE NM      87199

101906544009240222   LEGAL: 011  011N ORTH ALBUQ ACRES TR 1 UNIT 3              LAND USE:
                     PROPERTY ADDR: 00000   FLORENCE
                        OWNER NAME: SPS INVESTMENTS LC
                        OWNER ADDR: 08300   CARMEL                   AV NE ALBUQUERQUE NM      87122

101906545609240221   LEGAL: 012  011N ORTH ALBUQ ACRES TR 1 UNIT 3              LAND USE:
                     PROPERTY ADDR: 00000   FLORENCE
                        OWNER NAME: DOUGHTY ENTERPRISES INC
                        OWNER ADDR: 07009   PROSPECT                 AV NE ALBUQUERQUE NM      87110
```



```
101906529006840202   LEGAL: 031  011N ORTH ALBUQ ACRES TR 1 UNIT 3              LAND USE:
                     PROPERTY ADDR: 00000   GLENDALE
                        OWNER NAME: PUEBLO OF SANDIA
                        OWNER ADDR: 00000                                BERNALILLO  NM      87004

101906530706840203   LEGAL: 030  011N ORTH ALBUQ ACRES TR 1 UNIT 3              LAND USE:
                     PROPERTY ADDR: 00000   GLENDALE
                        OWNER NAME: TAFOYA TONY & DULCIE
                        OWNER ADDR: 02723   CALLE CEDRO              SANTA FE    NM      87501

101906532406840204   LEGAL: 029  011N ORTH ALBUQ ACRES TR 1 UNIT 3              LAND USE:
                     PROPERTY ADDR: 00000   GLENDALE
                        OWNER NAME: GROFF RICHARD K & LINCOLN TRUS
                        OWNER ADDR: 00000                                DENVER      CO      80217

101906534006840205   LEGAL: 028  011N ORTH ALBUQ ACRES TR 1 UNIT 3              LAND USE:
                     PROPERTY ADDR: 00000   GLENDALE
                        OWNER NAME: LINCOLN TRUST CO TRUSTEE FBO
                        OWNER ADDR: 00000                                DENVER      CO      80217

101906535606940206   LEGAL: 027  011N ORTH ALBUQ ACRES TR 1 UNIT 3              LAND USE:
                     PROPERTY ADDR: 00000   GLENDALE
                        OWNER NAME: LOPEZ LEO
                        OWNER ADDR: 01089   NO. ALICE             AV    RIALTO      CA      92376

101906537306940207   LEGAL: 026  011N ORTH ALBUQ ACRES TR 1 UNIT 3              LAND USE:
                     PROPERTY ADDR: 00000   GLENDALE
                        OWNER NAME: LOPEZ LEO
                        OWNER ADDR: 01089   NORTH ALICE            AV    RIALTO      CA      92376

101906538906940208   LEGAL: 025  011N ORTH ALBUQ ACRES TR 1 UNIT 3              LAND USE:
                     PROPERTY ADDR: 00000   GLENDALE
                        OWNER NAME: LINCOLN TRUST CO TRUSTEE FBO
                        OWNER ADDR: 00000                                DENVER      CO      80217

101906540706940209   LEGAL: 024  011N ORTH ALBUQ ACRES TR 1 UNIT 3              LAND USE:
                     PROPERTY ADDR: 00000   GLENDALE
                        OWNER NAME: ASHWILL THOMAS D & DONNA L
                        OWNER ADDR: 07101   VISTA DEL ARROYO        NE ALBUQUERQUE NM      87109

101906542406940210   LEGAL: 023  011N ORTH ALBUQ ACRES TR 1 UNIT 3              LAND USE:
                     PROPERTY ADDR: 00000   GLENDALE
                        OWNER NAME: BACA JOSE E & AUGUSTINA
                        OWNER ADDR: 00000                                BELEN       NM      87002

101906544006940211   LEGAL: 022  011N ORTH ALBUQ ACRES TR 1 UNIT 3              LAND USE:
                     PROPERTY ADDR: 00000   GLENDALE
                        OWNER NAME: GROFF RICHARD K
                        OWNER ADDR: 01696   RUSTY                 RD NW ALBUQUERQUE NM      87114

101906545606940212   LEGAL: 021  011N ORTH ALBUQ ACRES TR 1 UNIT 3              LAND USE:
                     PROPERTY ADDR: 00000   GLENDALE
                        OWNER NAME: DOUGHTY ENTERPRISES INC
                        OWNER ADDR: 07009   PROSPECT                 AV NE ALBUQUERQUE NM      87110
```

101906529003840131 LEGAL: 002 012N ORTH ALBU, ACRES TR 1 UNIT 3 LAND USE:
PROPERTY ADDR: 00000 MODESTO
OWNER NAME: FRANKLIN ROBERT D &
OWNER ADDR: 07619 MODESTO AV NE ALBUQUERQUE NM 87122

101906530703840130 LEGAL: 003 012N ORTH ALBUQ ACRES TR 1 UNIT 3 LAND USE:
PROPERTY ADDR: 00000 MODESTO
OWNER NAME: STEPHENS D B & JOYCE M
OWNER ADDR: 11409 ELENA DR NE ALBUQUERQUE NM 87122

101906532403840129 LEGAL: 004 012N ORTH ALBUQ ACRES TR 1 UNIT 3 LAND USE:
PROPERTY ADDR: 00000 GLENDALE
OWNER NAME: RANDALL HOMES LTD LLC
OWNER ADDR: 00000 ALBUQUERQUE NM 87199

101906534003840128 LEGAL: 005 012N ORTH ALBUQ ACRES TR 1 UNIT 3 LAND USE:
PROPERTY ADDR: 00000 GLENDALE
OWNER NAME: SCHMILLE RANDALL J & BETTY
OWNER ADDR: 00000 ALBUQUERQUE NM 87199

101906535603940127 LEGAL: 006 012N ORTH ALBUQ ACRES TR 1 UNIT 3 LAND USE:
PROPERTY ADDR: 00000 GLENDALE
OWNER NAME: SCHMILLE RANDY & BETTY
OWNER ADDR: 00000 ALBUQUERQUE NM 87199

101906537303940126 LEGAL: 007 012N ORTH ALBUQ ACRES TR 1 UNIT 3 LAND USE:
PROPERTY ADDR: 00000 GLENDALE
OWNER NAME: SCHMILLE RANDALL J & BETTY
OWNER ADDR: 00000 ALBUQUERQUE NM 87199

101906538903940125 LEGAL: 008 012N ORTH ALBUQ ACRES TR 1 UNIT 3 LAND USE:
PROPERTY ADDR: 00000 GLENDALE
OWNER NAME: SCHMILLE RANDALL J & BETTY
OWNER ADDR: 00000 ALBUQUERQUE NM 87199

101906540703940124 LEGAL: 009 012N ORTH ALBUQ ACRES TR 1 UNIT 3 LAND USE:
PROPERTY ADDR: 00000 GLENDALE
OWNER NAME: MCALLISTER JAMES E & DIXIE L
OWNER ADDR: 00000 ALBUQUERQUE NM 87199

101906542403940123 LEGAL: 010 012N ORTH ALBUQ ACRES TR 1 UNIT 3 LAND USE:
PROPERTY ADDR: 00000 GLENDALE
OWNER NAME: SPRADLIN RONALD G & HELMICK TI
OWNER ADDR: 00000 ALBUQUERQUE NM 87154

101906544003940122 LEGAL: 011 012N ORTH ALBUQ ACRES TR 1 UNIT 3 LAND USE:
PROPERTY ADDR: 00000 GLENDALE
OWNER NAME: SPRADLIN RONALD G & HELMICK TI
OWNER ADDR: 00000 ALBUQUERQUE NM 87154

101906545603940121 LEGAL: 012 012N ORTH ALBUQ ACRES TR 1 UNIT 3 LAND USE:
PROPERTY ADDR: 00000 GLENDALE
OWNER NAME: SPRADLIN RONALD G & HELMICK TI
OWNER ADDR: 00000 ALBUQUERQUE NM 87154

PLEASE NOTE: The Neighborhood Association information listed in this letter is valid for one (1) month. If you haven't filed your application within one (1) month of the date of this letter – you will need to get an updated letter from our office. It is your responsibility to provide current information – outdated information may result in a deferral of your case.

City of Albuquerque

Date: June 29, 2004

TO CONTACT NAME: Susan Rasinski
COMPANY/AGENCY: Mark Goodman and Associates, PA
ADDRESS/ZIP: PO Box 90606 / 87199
PHONE/FAX #: 828-2200 Fax - 797-9539

Thank you for your inquiry of 6-29-04 (date) requesting the names of **Recognized Neighborhood Associations** who would be affected under the provisions of O-92 by your proposed project at Lots 22-30, Block 11, Tract 1, Unit 3, North Albuquerque Acres
zone map page(s) B19.

Our records indicate that the **Recognized Neighborhood Association(s)** affected by this proposal and the contact names are as follows:

NOR ESTE

Neighborhood Association
Contacts: JAY ROWLAND
7729 R.C. GORMAN AVE NE / 87122
797-0853 (h)
JOE YARDUMIAN
7801 R.C. GORMAN AVE NE / 87109
797-1851 (h)

Neighborhood Association
Contacts:

See reverse side for additional Neighborhood Association Information: YES {✓} NO { }

Please note that according to O-92 you are required to notify each of these contact persons by ***CERTIFIED MAIL, RETURN RECEIPT REQUESTED, BEFORE*** the Planning Department will accept your application filing. ***IMPORTANT! FAILURE OF ADEQUATE NOTIFICATION MAY RESULT IN YOUR APPLICATION HEARING BEING DEFERRED FOR 30 DAYS.*** If you have any questions about the information provided, please contact our office at (505) 924-3914 or by fax at 924-3913.

Sincerely,

Stephen Wu

OFFICE OF NEIGHBORHOOD COORDINATION

planning.recognized.na.form(12/03)

Attention: Both contacts per neighborhood association need to be notified.

FORM DRWS: DRAINAGE REPORT / WATER & SEWER AVAILABILITY

THIS FORM IS REQUIRED WITH THE DEVELOPMENT REVIEW BOARD APPLICATION FOR MAJOR SUBDIVISIONS AND SITE DEVELOPMENT PLANS.

PROJECT NAME Mountain Ridge Subdivision

AGIS MAP # B-19

LEGAL DESCRIPTION Lots 22-30, Tract 1, Block 11, Unit 3, NAA

X **DRAINAGE REPORT**

A drainage report, as per the Drainage Ordinance, was submitted to the City of Albuquerque Public Works Department, Hydrology Division (2nd floor Plaza del Sol) on 6-29-04 [date].

Applicant / Agent — 6-30-04 Date

Hydrology Division Representative — Date

X **WATER AND SEWER AVAILABILITY STATEMENT**

A Water and Sewer Availability Statement for this project was ~~requested~~ recieved from the City of Albuquerque Utilities Development Division (2nd floor Plaza del Sol) on 5-11-04 [date].

Applicant / Agent — 6-30-04 Date

Utilities Division Representative — Date

DRB# ____ - 1003417

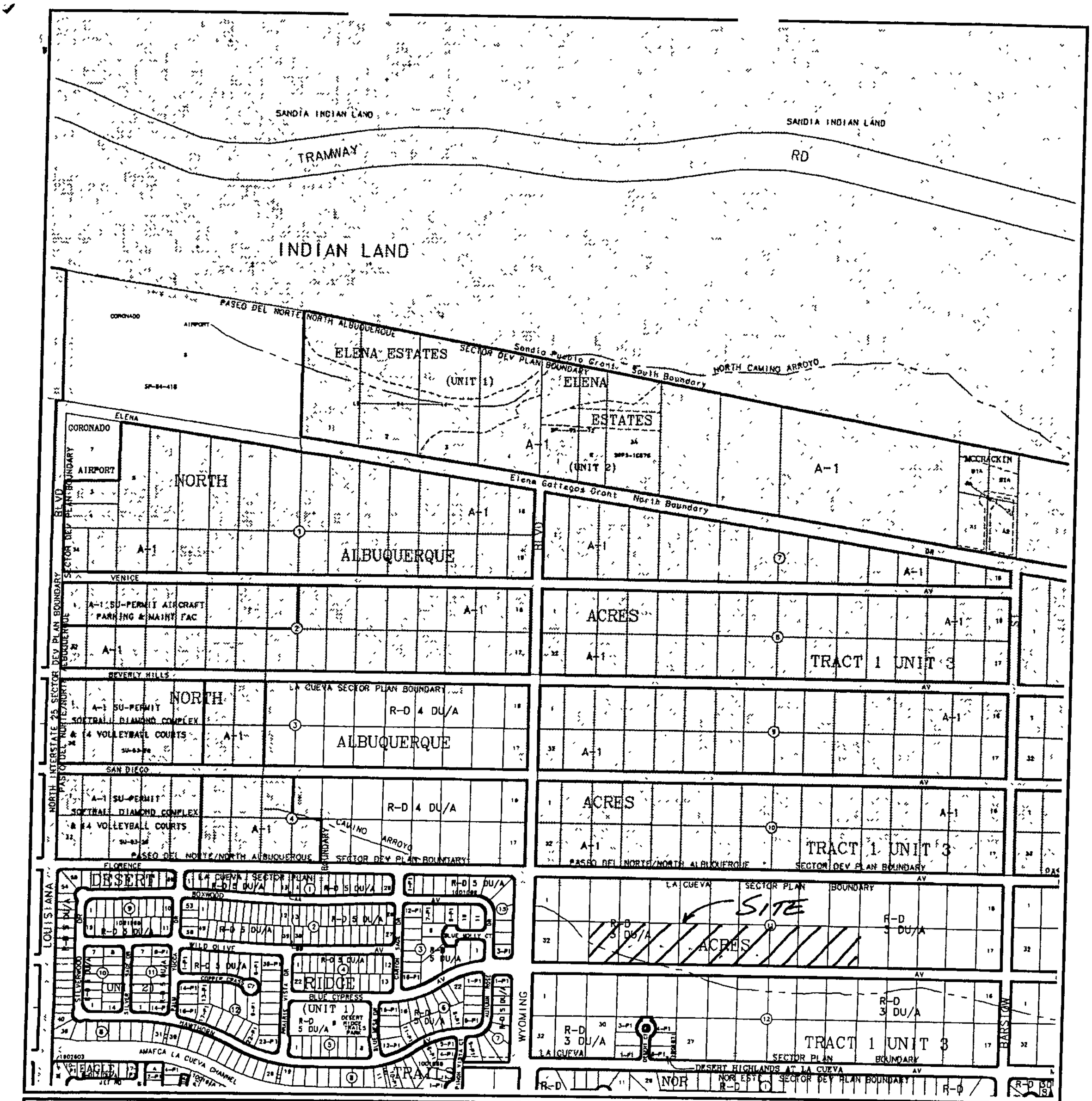

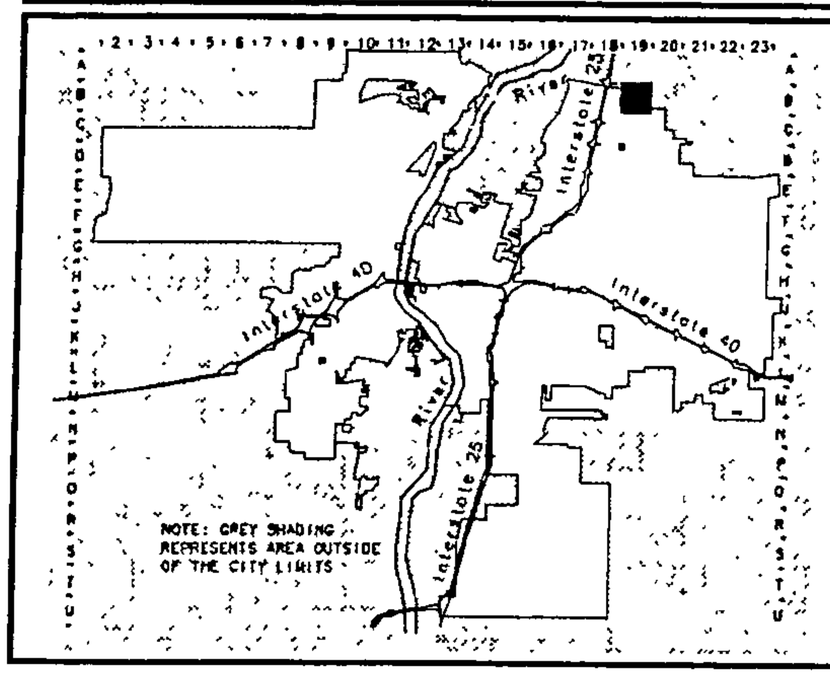

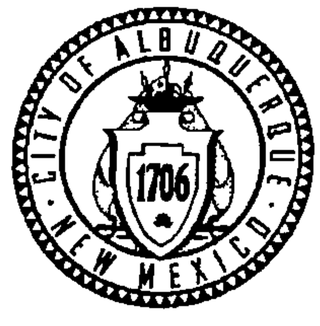

Albuquerque Geographic Information System
PLANNING DEPARTMENT

© Copyright 2003

GRAPHIC SCALE IN FEET

250 0 750 1000

Zone Atlas Page

B-19-Z

Map Amended through November 01, 2003

D. Mark Goodwi Associates, P.A.
Consulting Engineers
P.O. BOX 90606, ALBUQUERQUE,NM 87199
(505) 828-2200 FAX 797-9539
e-mail: goodwinengrs@comcast.net

June 29, 2004

Ms. Sheran Matson
DRB Chair
City of Albuquerque
P.O. Box 1293
Albuquerque, NM 87103

Re: Mountain Ridge Subdivision (aka Quivera Estates, Unit 2) DRB # 1003417

Dear Ms. Matson:

The owner of the above referenced project wishes to subdivide 9 North Albuquerque lots into 27 single-family home lots and 1 tract. The property is zoned RD-3. The owner would also like to defer temporarily the construction of sidewalks on the interior and request a variance from the minimum standards of the DPM by constructing the sidewalk at the back of curb within the subdivision. The roads are private and gated.

Please contact our office if you have any questions.

Sincerely,

MARK GOODWIN & ASSOCIATES, PA

Gregory J. Krenik, PE
Vice President

GJK/bg

f:\\a04022-mountain ridge\variance letter DRB

PUBLIC HEARING--DEVELOPMENT REVIEW BOARD
CITY OF ALBUQUERQUE

Notice is hereby given that the Development Review Board, City of Albuquerque, will hold a public hearing in the **Plaza del Sol Hearing Room, Basement, Plaza del Sol Building, 600 2nd St NW,** on **Wednesday, July 28, 2004,** beginning at **9:00 a.m.** for the purpose of considering the following:

Project # 1000583
04DRB-01016 Major-Two Year SIA

MARK GOODWIN & ASSOCIATES PA agent(s) for PEGGY DASKALOS request(s) the above action(s) for all or a portion of Block(s) 1, Tract(s) B-1-A AND B-1-B, **FOOTHILLS NORTH,** zoned C-2 community commercial zone, located on LOMAS BLVD NE, between TRAMWAY BLVD NE and CUMBRES ST NE containing approximately 4 acre(s). [REF: 02DRB-01022, 04DRB-01707, 04DRB-01652, 04DRB-01618, 04DRB-00772] (K-23)

Project # 1003531
04DRB-01034 Major-Street Name Change

AFRICAN AMERICAN ALLIANCE OF ALBUQUERQUE request(s) the above action(s) for a Street Name Change from **BASEHART AVENUE SE TO OWEN SMAULDING ROAD SE**, zoned SU-1, PDA, located on UNIVERSITY BLVD SE, between AVENIDA CESAR CHAVEZ SE and COAL AVE SE. (L-15)

Project # 1002529
04DRB-01059 Major-Preliminary Plat Approval
04DRB-01060 Minor-SiteDev Plan Subd/EPC

CONSENSUS PLANNING INC agent(s) for RANDY EASTBURG, CAS, LLC request(s) the above action(s) for all or a portion of Tract(s) 6-B, Lot(s) 1 thru 5, **PARTITION OF BLACK RANCH,** zoned SU-1 special use zone for C-1, located on COORS BLVD NW, between WESTSIDE DR NW and CALABACILLAS ARROYO containing approximately 6 acre(s). [REF: 03EPC02058,03EPC 02059,03EPC 02060, Z- 93-115] **[Makita Hill, EPC Case Planner]** (B-13)

Project # 1003417
04DRB-01056 Major-Preliminary Plat Approval
04DRB-01057 Minor-Subd Design (DPM) Variance
04DRB-01058 Minor-Temp Defer SDWK

MARK GOODWIN & ASSOCIATES, PA agent(s) for ALPHA EQUITIES, LLC request(s) the above action(s) for all or a portion of Lot(s) 22-30, Block(s) 11, Tract(s) 1, NORTH ALBUQUERQUE ACRES, UNIT 3, MOUNTAIN RIDGE SUBDIVISION (to be known as **QUIVERA ESTATES, UNIT 2,** zoned R-D residential and related uses zone, developing area, (3DU/A) located on GLENDALE AVE NE, between WYOMING BLVD NE and BARSTOW ST NE containing approximately 10 acre(s). [REF: 04DRB00671] (B-19)

SEE PAGE 2 . . .

PUBLIC HEARING--DEVELOPMENT REVIEW BOARD
CITY OF ALBUQUERQUE

Project # 1001182
04DRB-01047 Major-Vacation of Pub Right-of-Way
04DRB-01048 Major-Vacation of Public Easements
04DRB-01049 Major-Preliminary Plat Approval
04DRB-01050 Minor-Sidewalk Waiver
04DRB-01051 Minor-Temp Defer SDWK

THOMPSON ENGINEERING & CONSULTING INC., agent(s) for VISION DEVELOPMENT LLC request(s) the above action(s) for all or a portion of Tract(s) B, WESTRIDGE MOBILE HOME PARK, PHASE 2, (to be known as **BLUEWATER POINTE SUBDIVISION,** zoned R-LT residential zone, located on 94TH ST NW, between BLUEWATER RD NW and AVALON RD NW containing approximately 8 acre(s). [REF: Z-97-58, AX-97-7, Z-99-60, 01EPC-01088, 01089, 01DRB-00505, 00506,02DRB-00337] (K-9)

Details of the application(s) may be examined at the Development Services Center of the Planning Department, Second Floor, Plaza Del Sol Building, 600 2nd St NW, between 10:00 a.m. and 12:00 p.m. or 2:00 p.m. and 4:00 p.m. Monday through Friday except holidays. Individuals with disabilities who need special assistance to participate at this meeting should contact Claire Senova, Planning Department, at 924-3946. Hearing Impaired users may contact her via the New Mexico Relay Network by calling toll-free: 1-800-659-8331.

Claire Senova
for Sheran Matson, AICP, DRB Chair
Development Review Board

TO BE PUBLISHED IN THE ALBUQUERQUE JOURNAL MONDAY, JULY 12, 2004.

CITY OF ALBUQUERQUE

THREE HUNDRED YEARS
1706 • 2006
ALBUQUERQUE
Making History

Planning Department

P.O. Box 1293

Albuquerque, NM 87103

ALBUQUERQUE NM 87101

RETURN
TO SENDER
NOT DELIVERABLE
AS ADDRESSED
UNABLE TO FORWARD

UNITED STATES POSTAGE
PITNEY BOWES
02 1A $ 00.37
0004329277 JUL 12 20
MAILED FROM ZIP CODE 8710

DLB

ANK Need suite #

10190652900914023 1

SPS INVESTMENTS LC
8300 CARMEL AV NE
ALBUQUERQUE NM 87122

87122+31

PLANNING TRACKING LOG

Date	Project Name & #	Action Request	Action Taken
5/12/04	1003417 N.A.A. Unit 3	sketch	comments

CITY OF ALBUQUERQUE
PLANNING DEPARTMENT
Development Review Board
May 12, 2004 Comments

ITEM # 18

PROJECT # 1003417 **APPLICATION # 04-00671**

RE: Lots 22-30, Block 11, Tract 1, N.A.A., Unit 3/sketch

The La Cueva Sector Plan requires a site plan for subdivision only if the development proposed is more intense than what is typically allowed in the R-1 zone defined as lot size less than 5,000 square feet.

A perimeter wall design submittal is required for the wall along Glendale.

Please remember to list the zoning on the preliminary plat as per the Subdivision Ordinance.

Sheran Matson, AICP DRB Chair
924-3880 Fax 924-3864 smatson@cabq.gov

City of Albuquerque
Parks and Recreation Department

PO Box 1293, Albuquerque, New Mexico 87103
Inter-Office Correspondence

Development Review Board Comments

Project Number: 1003417	**DRB Date:** 5/12/04
Application Number: 04DRB-00671	**Item Number:** 18

Subdivision:

Lot(s) 22-30, Block(s) 11, Tract(s) 1, NORTH ALBUQUERQUE ACRES, UNIT 3

Zoning: R-D

Zone Page: B-19

New Lots (or units) : 27

Request for:

- [x] Sketch Plat Review & Comment
- [ ] Bulk Land Variance
- [ ] Site Development Plan for Subdivision
- [ ] Site Development Plan for Building Permit
- [ ] Preliminary Plat
- [ ] Final Plat
- [ ] Vacation of Public RoW
- [ ] Vacation of Public Easement
- [ ] Vacation of Private Easement
- [ ] Temp. Deferral of Sidewalk Construction
- [ ] Sidewalk Variance
- [ ] SIA Extension
- [ ] Other

Parks and Recreation Comments:

This request will be subject to the following requirements of the City Park Dedication and Development Ordinance:

Prior to sign-off on the final plat, a fee in-lieu of and equal to the value of the required park land dedication for 27 residential lots will be required. The fee will be based on an estimate of land value to be provided by the City Real Property office. Alternatively, the applicant may submit current appraisal information mutually acceptable to the applicant and the City.

The park development requirement will be met via the payment of a fee prior to issuance of building permit for each new dwelling unit.

The R-D zone requires 2,400 square feet of open space for each dwelling unit. With submittal of the Preliminary Plat/Site Development Plan, provide an Open Space Calculation Table showing the lot number, lot size, building & driveway area, provided open space, and remaining open space requirement. (This table can be separate from the plat itself.) Provide a dimensioned Typical Lot Plan, which shows a typical lot with the building footprint and driveway. (This should be on the Site Development Plan rather than the plat.) Include one of the following notes on the Preliminary and Final Plats indicating how the total remaining open space requirement will be met:

All open space requirements are met on the lot with the dwelling per the provisions of Section 14-16-3-8 (A) (1).

Total remaining open space requirements are met via a cash payment to the City of Albuquerque per the provisions of Section 14-16-3-8 (A) (2).

Total remaining open space requirements are met via the provision of detached open space per the

provisions of Section 14-16-3-8 (A) (3). *Note: This option is only applicable to land covered by a Sector Development Plan.

Signed: _____

for Christina Sandoval, (DMD) Phone: 768-3808

DEVELOPMENT REVIEW BOARD

TRANSPORTATION DEVELOPMENT

Standard Comment Sheet

DRB-1003417 **Item No. 18** **Zone Atlas B-19**

DATE ON AGENDA 5-12-04

INFRASTRUCTURE REQUIRED (X)YES ( )NO

CROSS REFERENCE: _____

_____

TYPE OF APPROVAL REQUESTED:

(X)SKETCH PLAT ( )PRELIMINARY PLAT ( )FINAL PLAT

( )SITE PLAN REVIEW AND COMMENT ( )SITE PLAN FOR SUBDIVISION

( )SITE PLAN FOR BUILDING PERMIT

No.	Comment
1)	Will this be a private road?
2)	Road width for P2 lots is 42'
3)	Need to show dedication on Glendale.
4)	Need pedestrian access points in addition to main entrance.
5)	Standard infrastructure req'd.
6)	Subdivision with greater than 6 acres need to have a through street. (Sector plan)

If you have any questions or comments please call Wilfred Gallegos at 924-3991. Meeting notes:

City of Albuquerque

CITY OF ALBUQUERQUE P.O. Box 1293 ALBUQUERQUE, NEW MEXICO 87103
PUBLIC WORKS DEPARTMENT
DEVELOPMENT SERVICE
HYDROLOGY DEVELOPMENT SECTION

DEVELOPMENT REVIEW BOARD--SPEED MEMO

DRB CASE NO/PROJECT NO: 1003417 **AGENDA ITEM NO: 18**

SUBJECT:

(01) Sketch Plat/Plan	(05) Site Plan for Subd	(10) Sector Dev Plan
(02) Bulk Land Variance	(06) Site Plan for BP	(11) Grading Plan
(03) Sidewalk Variance	(07) Vacation	(12) SIA Extension
(03a) Sidewalk Deferral	(08) Final Plat	(13) Master Development Plan
(04) Preliminary Plat	(09) Infrastructure List	(14) Other

ACTION REQUESTED:

REV/CMT:(x) APP:() SIGN-OFF:() EXTN:() AMEND:()

ENGINEERING COMMENTS:

An approved drainage report is required for Preliminary Plat approval.
An approved infrastructure list is required for Preliminary Plat approval.

RESOLUTION:

APPROVED ____; DENIED ____; DEFERRED ____; COMMENTS PROVIDED X discussed; WITHDRAWN

SIGNED-OFF: **(SEC-PLN) (SP-SUB) (SP-BP) (FP)** BY: **(UD) (CE) (TRANS) (PKS) (PLNG)**

DELEGATED: **(SEC-PLN) (SP-SUB) (SP-BP) (FP)** TO: **(UD) (CE) (TRANS) (PKS) (PLNG)**

FOR:

SIGNED: Bradley L. Bingham
City Engineer/AMAFCA Designee

DATE: May 12, 2004

THE CITY OF ALBUQUERQUE IS AN EQUAL OPPORTUNITY/REASONABLE ACCOMMODATION EMPLOYER

Current DRC Project Number: ~~ORIGINAL~~

9

FIGURE 12

INFRASTRUCTURE LIST

Date Submitted 8/2/04
Date Site Plan Approved:
Date Preliminary Plat Approved: 8/4/04
Date Preliminary Plat Expires 8/4/05
DRB Project No 1003417
DRB Application No. 04-01056
△1 8-18-04 NAME CHANGE

EXHIBIT "A"
TO SUBDIVISION IMPROVEMENTS AGREEMENT
DEVELOPMENT REVIEW BOARD (D.R.B.) REQUIRED INFRASTRUCTURE LIST

MOUNTAIN RIDGE SUBDIVISION

PROPOSED NAME OF PLAT AND/OR SITE DEVELOPMENT PLAN

Lots 22-30, Tract 1, Block 11, Unit 3, North Albuquerque Acres

EXISTING LEGAL DESCRIPTION PRIOR TO PLATTING ACTION

Following is a summary of PUBLIC/PRIVATE Infrastructure required to be constructed or financially guaranteed for the above development. This Listing is not necessarily a complete listing. During the SIA process and/or in the review of the construction drawings, if the DRC Chair determines that appurtenant items and/or unforeseen items have not been included in the infrastructure listing, the DRC Chair may include those items in the listing and related financial guarantee. Likewise, if the DRC Chair determines that appurtenant or non-essential items can be deleted from the listing, those items may be deleted as well as the related portions of the financial guarantees. All such revisions require approval by the DRC Chair, the User Department and agent/owner. If such approvals are obtained, these revisions to the listing will be incorporated administratively. In addition, any unforeseen items which arise during construction which are necessary to complete the project and which normally are the Subdivider's responsibility will be required as a condition of project acceptance and close out by the City.

SIA Sequence #	COA DRC Project #	Size	Type of Improvement	Location	From	To	Private Inspector	City Inspector	City Cnst Engineer
			PAVING						
		28" FF Private 6'	Res Pvmt C & G (Both Sides) Sidewalk (Both Sides) (1)	△1 MERISSA ~~Niki~~ Lane	East Terminus	West Terminus	/	/	/
		50' FF Private 4'	Res Pvmt C & G (Both Sides) Sidewalk (Both Sides)	Ashlynn Lane	△1 MERISSA ~~Niki~~ Lane	Glendale Ave	/	/	/
		24' F-E	Perm Pvmt C & G (North Side) Sidewalk (North Side)	Glendale Avenue	East Prop Line	West Prop Line	/	/	/
		24' E-E	4" Temp Paving	Glendale Avenue	West Property Line	Wyoming Blvd	/	/	/
		6'	Sidewalk	40' Private Pedestrian △1 MERISSA ~~Niki~~ Lane		Glendale Ave	/	/	/
		6'	Sidewalk	Access Easment △1 MERISSA 15' Private Pedestrian Access Easment	MERISSA ~~Niki~~ Lane	Glendale Ave	/	/	/
			WATER						
		6"	Waterline	△1 MERISSA ~~Niki~~ Lane	△1 East Terminus	West Terminus	/	/	/
		6"	Waterline	15' WL Easement MERISSA ~~Niki~~ Lane		Glendale Ave	/	/	/
		6"	Waterline	40' SAS, SD, WL Esmt MERISSA △1 ~~Niki~~ Lane		Glendale Ave	/	/	/
		8"	Waterline (2)	Glendale Ave	Wyoming Blvd	Barstow St	/	/	/
		12"	Waterline (2)	Barstow St	Glendale Ave	Modesto Ave	/	/	/
			SAS						
		8"	SAS	△1 MERISSA ~~Niki~~ Lane	East Terminus	West Terminus	/	/	/

A04022

revised 07/01/01

ORIGINAL

Project name: Mountain Ridge Subdivision

SIA Sequence #	COA DRC Project #	Size	Type of Improvement	Location	From	To	Private Inspector	City Inspector	City Cnst Engineer
		8"	SAS	40' SAS, SD, WL Esmt	△1 MERISSA ~~Niki~~ Lane	Glendale Ave	/	/	/
		8"	SAS (2)	Glendale Ave	Wyoming Blvd	East Prop Line			
			STORM DRAIN						
		18"	Storm Drain	△1 MERISSA ~~Niki~~ Lane	△1 Lot 5, Block 1	West Terminus	/	/	/
		24"	Storm Drain	40' SAS, SD, WL Esmt	MERISSA ~~Niki~~ Lane	Glendale Ave	/	/	/
		78", 84" & 96"	Storm Drain (2)	Glendale Avenue	East Prop Line	Wyoming Boulevard			

1 Sidewalks to be deferred
2 Financially Guaranteed w/. COA Project # 729781
3 Water infrastructure to include valves, fittings, valveboxes and fire hydrants.
4 Sanitary sewer to include manholes and service connections.
5 Storm Drain to includes inlets, manholes
6 Grading & Drainage Certification per DPM including Perimeter walls as shown on the Grading Plan for Release of SIA and Financial Guarantees. Financial Guarantee is not required for this item
7 Street lights per DPM

AGENT / OWNER

Gregory J. Krenik, PE
NAME (print)

MARK GOODWIN & ASSOCIATES
FIRM

8-2-04
SIGNATURE - date

MAXIMUM TIME ALLOWED TO CONSTRUCT THE IMPROVEMENTS WITHOUT A DRB EXTENSION: _____

DEVELOPMENT REVIEW BOARD MEMBER APPROVALS

8/4/04
DRB CHAIR - date

Christina Sandoval 8/4/04 CS 8/18/04
PARKS & GENERAL SERVICES - date

8-9-04 WA
8-4-04
TRANSPORTATION DEVELOPMENT - date

Kathleen 8/18/04
AMAFCA - date

8/4/04
UTILITY DEVELOPMENT - date

_____ - date

BOB 8/18/04
Bradley J. Bingham 8/4/04
CITY ENGINEER - date

_____ - date

DESIGN REVIEW COMMITTEE REVISIONS

REVISION	DATE	DRC CHAIR	USER DEPARTMENT	AGENT /OWNER

A04022

revised 07/01/01

Current DRC
Project Number:_____

FIGURE 12

INFRASTRUCTURE LIST

Date Submitted: 8/9//04
Date Site Plan Approved:_____
Date Preliminary Plat Approved:_____
Date Preliminary Plat Expires:)_____
DRB Project No.: 1003417
DRB Application No.:_____

ORIGINAL

EXHIBIT "A"
TO SUBDIVISION IMPROVEMENTS AGREEMENT
DEVELOPMENT REVIEW BOARD (D.R.B.) REQUIRED INFRASTRUCTURE LIST

MOUNTAIN RIDGE SUBDIVISION

PROPOSED NAME OF PLAT AND/OR SITE DEVELOPMENT PLAN

Lots 22-30, Tract 1, Block 11, Unit 3, North Albuquerque Acres

EXISTING LEGAL DESCRIPTION PRIOR TO PLATTING ACTION

Following is a summary of PUBLIC/PRIVATE infrastructure required to be constructed or financially guaranteed for the above development. This listing is not necessarily a complete listing. During the SIA process and/or in the review of the construction drawings, if the DRC Chair determines that appurtenant items and/or unforeseen items have not been included in the infrastructure listing, the DRC Chair may include those items in the listing and related financial guarantee. Likewise, if the DRC Chair determines that appurtenant or non-essential items can be deleted from the listing, those items may be deleted as well as the related portions of the financial guarantees. All such revisions require approval by the DRC Chair, the User Department and agent/owner. If such approvals are obtained, these revisions to the listing will be incorporated administratively. In addition, any unforeseen items which arise during construction which are necessary to complete the project and which normally are the Subdivider's responsibility will be required as a condition of project acceptance and close out by the City.

SIA Sequence #	COA DRC Project #	Size	Type of Improvement	Location	From	To	Private Inspector	City Inspector	City Cnst Engineer
			PAVING						
		28" FF Private 6'	Res Pvmt C & G (Both Sides) Sidewalk (Both Sides) (1)	Merissa Lane	East Terminus	West Terminus	/	/	/
		50' FF Private 4'	Res Pvmt C & G (Both Sides) Sidewalk (Both Sides)	Ashlynn Lane	Merissa Lane	Glendale Ave	/	/	/
		24' F-E	Perm Pvmt C & G (North Side) 6' Sidewalk (North Side)	Glendale Avenue	East Prop Line	West Prop Line	/	/	/
		24' E-E 6'	4" Temp Paving Sidewalk	Glendale Avenue 40' Private Pedestrian Access Easment	West Property Line Merissa Lane	Wyoming Blvd Glendale Ave	/ /	/ /	/ /
		6'	Sidewalk	15' Private Pedestrian Access Easment	Merissa Lane	Glendale Ave	/	/	/
			WATER						
		6"	Waterline	Merissa Lane	East Terminus	West Terminus	/	/	/
		6"	Waterline	15' WL Easement	Merissa Lane	Glendale Ave	/	/	/
		6"	Waterline	40' SAS, SD, WL Esmt	Merissa Lane	Glendale Ave	/	/	/
		8"	Waterline (2)	Glendale Ave	Wyoming Blvd	Barstow St	/	/	/
		12"	Waterline (2)	Barstow St	Glendale Ave	Modesto Ave	/	/	/
			SAS						
		8"	SAS	Merissa Lane	East Terminus	West Terminus	/	/	/

A04022

revised 07/01/01

Project name: Mountain Ridge Subdivision

SIA Sequence #	COA DRC Project #	Size	Type of Improvement	Location	From	To	Private Inspector	City Inspector	City Cnst Engineer
		8"	SAS	40' SAS, SD, WL Esmt	Merissa Lane	Glendale Ave	/	/	/
		8"	SAS (2)	Glendale Ave	Wyoming Blvd	East Prop Line			
			STORM DRAIN						
		18"	Storm Drain	Merissa Lane	Lot 5, Block 1	West Terminus	/	/	/
		24"	Storm Drain	40' SAS, SD, WL Esmt	Merissa Lane	Glendale Ave	/	/	/
		78", 84" & 96"	Storm Drain (2)	Glendale Avenue	East Prop Line	Wyoming Boulevard			

1 Sidewalks to be deferred
2 Financially Guaranteed w/. COA Project # 729781
3 Water infrastructure to include valves, fittings, valveboxes and fire hydrants.
4 Sanitary sewer to include manholes and service connections.
5 Storm Drain to includes inlets, manholes
6 Grading & Drainage Certification per DPM including Perimeter walls as shown on the Grading Plan for Release of SIA and Financial Guarantees Financial Guarantee is not required for this item
7 Street lights per DPM

AGENT / OWNER

Gregory J. Krenik, PE
NAME (print)

MARK GOODWIN & ASSOCIATES
FIRM

8-9-04
SIGNATURE - date

MAXIMUM TIME ALLOWED TO CONSTRUCT THE IMPROVEMENTS WITHOUT A DRB EXTENSION: _____

DEVELOPMENT REVIEW BOARD MEMBER APPROVALS

DRB CHAIR - date

PARKS & GENERAL SERVICES - date

TRANSPORTATION DEVELOPMENT - date

AMAFCA - date

UTILITY DEVELOPMENT - date

_____ - date

CITY ENGINEER - date

_____ - date

DESIGN REVIEW COMMITTEE REVISIONS

REVISION	DATE	DRC CHAIR	USER DEPARTMENT	AGENT /OWNER

A04022

revised 07/01/01

06/04/04 WED 14:29 FAX 5059243864 → → → MARK GOODWIN 002

Current DRC Project Number: ORIGINAL

FIGURE 12

INFRASTRUCTURE LIST

Date Submitted: 8/2//04
Date Site Plan Approved:
Date Preliminary Plat Approved: 8/4/04
Date Preliminary Plat Expires: 8/4/05
DRB Project No.: 1003417
DRB Application No. 04-01056

EXHIBIT "A"
TO SUBDIVISION IMPROVEMENTS AGREEMENT
DEVELOPMENT REVIEW BOARD (D.R.B.) REQUIRED INFRASTRUCTURE LIST

MOUNTAIN RIDGE SUBDIVISION

PROPOSED NAME OF PLAT AND/OR SITE DEVELOPMENT PLAN

Lots 22-30, Tract 1, Block 11, Unit 3, North Albuquerque Acres
EXISTING LEGAL DESCRIPTION PRIOR TO PLATTING ACTION

Following is a summary of PUBLIC/PRIVATE infrastructure required to be constructed or financially guaranteed for the above development. This Listing is not necessarily a complete listing. During the SIA process and/or in the review of the construction drawings, if the DRC Chair determines that appurtenant items and/or unforeseen items have not been included in the infrastructure listing, the DRC Chair may include those items in the listing and related financial guarantee. Likewise, if the DRC Chair determines that appurtenant or non-essential items can be deleted from the listing, those items may be deleted as well as the related portions of the financial guarantees. All such revisions require approval by the DRC Chair, the User Department and agent/owner. If such approvals are obtained, these revisions to the listing will be incorporated administratively. In addition, any unforeseen items which arise during construction which are necessary to complete the project and which normally are the Subdivider's responsibility will be required as a condition of project acceptance and close out by the City.

SIA Sequence #	COA DRC Project #	Size	Type of Improvement	Location	From	To	Private Inspector	City Inspector	City Cnst Engineer
			PAVING						
		28' FF Private 6'	Res Pvmt C & G (Both Sides) Sidewalk (Both Sides) (1)	Niki Lane	East Terminus	West Terminus	/	/	/
		50' FF Private 4'	Res Pvmt C & G (Both Sides) Sidewalk (Both Sides)	Ashlynn Lane	Niki Lane	Glendale Ave	/	/	/
		24' F-E	Perm Pvmt C & G (North Side) Sidewalk (North Side)	Glendale Avenue	East Prop Line	West Prop Line	/	/	/
		24' E-E	4" Temp Paving	Glendale Avenue	West Property Line	Wyoming Blvd	/	/	/
		6'	Sidewalk	40' Private Pedestrian Access Easment	Niki Lane	Glendale Ave	/	/	/
		6'	Sidewalk	15' Private Pedestrian Access Easment	Niki Lane	Glendale Ave	/	/	/
			WATER						
		6"	Waterline	Niki Lane	East Terminus	West Terminus	/	/	/
		6"	Waterline	15' WL Easement	Niki Lane	Glendale Ave	/	/	/
		6"	Waterline	40' SAS, SD, WL Esmt	Niki Lane	Glendale Ave	/	/	/
		8"	Waterline (2)	Glendale Ave	Wyoming Blvd	Barstow St	/	/	/
		12"	Waterline (2)	Barstow St	Glendale Ave	Modesto Ave	/	/	/
			SAS						
		8"	SAS	Niki Lane	East Terminus	West Terminus	/	/	/

A04022

revised 07/01/01

ORIGINAL

Project name: Mountain Ridge Subdivision

SIA Sequence #	COA DRC Project #	Size	Type of Improvement	Location	From	To	Private Inspector	City Inspector	City Cnst Engineer
		8"	SAS	40' SAS, SD, WL Esmt	Niki Lane	Glendale Ave	/	/	/
		8"	SAS (2)	Glendale Ave	Wyoming Blvd	East Prop Line			
			STORM DRAIN						
		18"	Storm Drain	Niki Lane	Lot 5, Block 1	West Terminus	/	/	/
		24"	Storm Drain	40' SAS, SD, WL Esmt	Niki Lane	Glendale Ave	/	/	/
		78", 84" & 96"	Storm Drain (2)	Glendale Avenue	East Prop Line	Wyoming Boulevard			

1 Sidewalks to be deferred
2 Financially Guaranteed w/. COA Project # 729781
3 Water infrastructure to include valves, fittings, valveboxes and fire hydrants.
4 Sanitary sewer to include manholes and service connections.
5 Storm Drain to includes inlets, manholes
6 Grading & Drainage Certification per DPM including Perimeter walls as shown on the Grading Plan for Release of SIA and Financial Guarantees. Financial Guarantee is not required for this item
7 Street lights per DPM

AGENT / OWNER

Gregory J. Krenik, PE
NAME (print)

MARK GOODWIN & ASSOCIATES
FIRM

8-2-04
SIGNATURE - date

MAXIMUM TIME ALLOWED TO CONSTRUCT THE IMPROVEMENTS WITHOUT A DRB EXTENSION: _____

DEVELOPMENT REVIEW BOARD MEMBER APPROVALS

S Matson 8/4/04
DRB CHAIR - date

Christina Sandoval 8/4/04
PARKS & GENERAL SERVICES - date

8-4-04
TRANSPORTATION DEVELOPMENT - date

AMAFCA - date

8/4/04
UTILITY DEVELOPMENT - date

_____ - date

Bradley J. Bingham 8/4/04
CITY ENGINEER - date

_____ - date

DESIGN REVIEW COMMITTEE REVISIONS

REVISION	DATE	DRC CHAIR	USER DEPARTMENT	AGENT /OWNER

A04022

City of Albuquerque

DEVELOPMENT/ PLAN REVIEW APPLICATION

	Supplemental form
SUBDIVISION	**S**
____ Major Subdivision action	
____ Minor Subdivision action	
____ Vacation	**V**
____ Variance (Non-Zoning)	
SITE DEVELOPMENT PLAN	**P**
____ ...for Subdivision Purposes	
____ ...for Building Permit	
____ IP Master Development Plan	
____ Cert. of Appropriateness (LUCC)	**L**

	Supplemental form
ZONING & PLANNING	**Z**
____ Annexation	
____ County Submittal	
____ EPC Submittal	
____ Zone Map Amendment (Establish or Change Zoning)	
____ Sector Plan (Phase I, II, III)	
____ Amendment to Sector, Area, Facility or Comprehensive Plan	
____ Text Amendment (Zoning Code/Sub Regs)	
APPEAL / PROTEST of...	**A**
____ Decision by: DRB, EPC, LUCC, Planning Director or Staff, ZHE, Zoning Board of Appeals	

PRINT OR TYPE IN BLACK INK ONLY. The applicant or agent must submit the completed application in person to the Planning Department Development Services Center, 600 2nd Street NW, Albuquerque, NM 87102. Fees must be paid at the time of application. Refer to supplemental forms for submittal requirements.

APPLICANT INFORMATION:

NAME: Quivera 2 , LLC PHONE: 922-9411

ADDRESS: PO Box 10005 FAX: 922-9418

CITY: Albuquerque STATE NM ZIP 87184 E-MAIL:

Proprietary interest in site: Owner **List all owners:**

AGENT (if any): Mark Goodwin & Associates, PA PHONE: 828-2200

ADDRESS: PO Box 90606 FAX: 797-9539

CITY: Albuquerque STATE NM ZIP 87199 E-MAIL:greg@goodwinengineers.com

DESCRIPTION OF REQUEST: Major Subdivision Application for Amended Perliminary Plat Approval & Amended Infrastructure List

Is the applicant seeking incentives pursuant to the Family Housing Development Program? ___ Yes. X No.

SITE INFORMATION: ACCURACY OF THE LEGAL DESCRIPTION IS CRUCIAL! ATTACH A SEPARATE SHEET IF NECESSARY.

Lot or Tract No. Lots 22-30, Tract 1 Block: 11 Unit: 3

Subdiv. / Addn. North Albuquerque Acres

Current Zoning: R-D3 D/UA Proposed zoning: Same

Zone Atlas page(s): B-19 No. of **existing** lots: 9 No. of **proposed** lots: 27 + 1 TR

Total area of site (acres): 9.0066 Density if applicable: dwellings per gross acre: _____ dwellings per net acre: _____

Within city limits? X Yes. No___, but site is within 5 miles of the city limits.) Within 1000FT of a landfill? No

UPC No. 101906544006940211, 101906542406940210, 101906540706940209, 101906538906940208, 101906537306940207, 101906535606940206, 101906534006840205, 101906532406840204, 101906530706840203 MRGCD Map No._____

LOCATION OF PROPERTY BY STREETS: On or Near: Glendale Avenue NE

Between: Wyoming Boulevard NE and Barstow Street NE

CASE HISTORY:

List **any** current or prior case number that may be relevant to your application (Proj., App., DRB-, AX_,Z_, V_, S_, etc.): 1003417

Check-off if project was previously reviewed by Sketch Plat/Plan ☐, or Pre-application Review Team ☐. Date of review: 05/12/04

SIGNATURE _____ DATE 8-9-04

(Print) Gregory J. Krenik, PE ___ Applicant X Agent

FOR OFFICIAL USE ONLY Form revised 9/01, 3/03, 7/03, 10/03, **3/04**

☑ ~~INTERNAL~~ ROUTING
☑ All checklists are complete
☑ All fees have been collected
☑ All case #s are assigned
☑ AGIS copy has been sent
☑ Case history #s are listed
☑ ~~A~~Site is within 1000ft of a landfill
☐ ~~F.H.~~D.P. density bonus
☐ ~~F.H.D~~.P. fee rebate

Application case numbers		Action	S.F.	Fees
04DRB - ____ - 01232		APP	S(3)	$ 50.00
____ - ____ - ____				$
____ - ____ - ____		Conf Mg Fee		$ 20.00
____ - ____ - ____				$
____ - ____ - ____				$
				Total $ 70.00

Hearing date Aug. 18th '04

8/10/04

Planner signature / date

Project # 1003417

FORM S(3): SUBDIVISION - D.R.B. MEETING (UNADVERTISED) OR INTERNAL ROUTING

☐ **SKETCH PLAT REVIEW AND COMMENT** **YOUR ATTENDANCE IS REQUIRED.**

__ Scale drawing of the proposed subdivision plat (folded to fit into an 8.5" by 14" pocket) **6** copies for unadvertised meetings. Sketches are not reviewed through internal routing.
__ Site sketch with measurements showing structures, parking, Bldg. setbacks, adjacent rights-of-way and street improvements, etcetera, if there is any existing land use (folded to fit into an 8.5" by 14" pocket) **6** copies.
__ Zone Atlas map with the entire property(ies) precisely and clearly outlined and crosshatched (to be photocopied)
__ Letter briefly describing, explaining, and justifying the request
__ Any original and/or related file numbers are listed on the cover application

☐ **MAJOR SUBDIVISION EXTENSION OF PRELIMINARY PLAT** **Your attendance is required.**

__ Preliminary Plat reduced to 8.5" x 11"
__ Zone Atlas map with the entire property(ies) precisely and clearly outlined and crosshatched (to be photocopied)
__ Letter briefly describing, explaining, and justifying the request
__ Copy of previous D.R.B. approved infrastructure list
__ Copy of the LATEST Official D.R.B. Notice of approval for Preliminary Plat Extension request
__ Any original and/or related file numbers are listed on the cover application

Extensions are not reviewed through internal routing.
Extension of preliminary plat approval expires after one year.

☐ **MAJOR SUBDIVISION FINAL PLAT APPROVAL** **Your attendance is required.**

__ Proposed Final Plat (folded to fit into an 8.5" by 14" pocket) **6** copies for unadvertised meetings, **4** copies for internal routing.
__ Design elevations & cross sections of perimeter walls
__ Zone Atlas map with the entire property(ies) precisely and clearly outlined and crosshatched (to be photocopied)
__ Original Mylar drawing of the proposed plat for internal routing only. Otherwise, bring Mylar to meeting.
__ Property owner's and City Surveyor's signatures on the Mylar drawing
__ SIA financial guaranty verification
__ Landfill disclosure and EHD signature line on the Mylar drawing if property is within a landfill buffer
__ Any original and/or related file numbers are listed on the cover application
__ **DXF FILE AND HARD COPY OF FINAL PLAT DATA FOR AGIS IS REQUIRED.**

☐ **MINOR SUBDIVISION PRELIMINARY / FINAL PLAT APPROVAL** **Your attendance is required.**

__ Proposed Preliminary / Final Plat (folded to fit into an 8.5" by 14" pocket) **6** copies for unadvertised meetings, **4** copies for internal routing.
__ Site sketch with measurements showing structures, parking, Bldg. setbacks, adjacent rights-of-way and street improvements, etcetera, if there is any existing land use (folded to fit into an 8.5" by 14" pocket) **6** copies.
__ Zone Atlas map with the entire property(ies) precisely and clearly outlined and crosshatched (to be photocopied)
__ Letter briefly describing, explaining, and justifying the request
__ Original Mylar drawing of the proposed plat for internal routing only. Otherwise, bring Mylar to meeting.
__ Property owner's and City Surveyor's signatures on the Mylar drawing
__ Landfill disclosure and EHD signature line on the Mylar drawing if property is within a landfill buffer
__ Fee (see schedule)
__ Any original and/or related file numbers are listed on the cover application
__ Infrastructure list if required **(verify with DRB Engineer)** **NO INTERNAL ROUTING**
__ **DXF FILE AND HARD COPY OF FINAL PLAT DATA FOR AGIS IS REQUIRED.**

☒ **AMENDMENT TO PRELIMINARY PLAT (with minor changes)** **Your attendance is required.**
☒ **AMENDMENT TO INFRASTRUCTURE LIST (with minor changes)**
☐ **AMENDMENT TO GRADING PLAN (with minor changes)**

PLEASE NOTE: There are no clear distinctions between significant and minor changes with regard to subdivision amendments. Significant changes are those deemed by the DRB to require public notice and public hearing.

X Proposed Amended Preliminary Plat, Infrastructure List, and/or Grading Plan (folded to fit into an 8.5" by 14" pocket) **6** copies for unadvertised meetings.
X Original Preliminary Plat, Infrastructure List, and/or Grading Plan (folded to fit into an 8.5" by 14" pocket) **6** copies for unadvertised meetings
X Zone Atlas map with the entire property(ies) precisely and clearly outlined and crosshatched (to be photocopied)
X Letter briefly describing, explaining, and justifying the request
X Original Mylar drawing of the proposed amended plat for internal routing only. Otherwise, bring Mylar to meeting.
X Property owner's and City Surveyor's signatures on the Mylar drawing, if the plat is being amended
X Any original and/or related file numbers are listed on the cover application

Amended preliminary plat approval expires after one year.

I, the applicant, acknowledge that any information required but not submitted with this application will likely result in deferral of actions.

GREGORY J. KRENIK
Applicant name (print)

8-9-04
Applicant signature / date

Form revised 3/03, 8/03 and **11/03**

☑ Checklists complete
☑ Fees collected
☑ Case #s assigned
☑ Related #s listed

Application case numbers
04DRB - ____ - 01232
____ - ____ - ____
____ - ____ - ____

1003417
Planner signature / date

Project # 8/10/04

D. Mark Goo(. ı & Associates, P.A.
Consulting Engineers
P.O. BOX 90606, ALBUQUERQUE,NM 87199
(505) 828-2200 FAX 797-9539
e-mail: goodwinengrs@comcast.net

August 9, 2004

Ms. Sheran Matson
DRB Chair
City of Albuquerque
PO Box 1293
Albuquerque, NM 87103

Re: Mountain Ridge Subdivision (DRB - 1003417)

Dear Ms. Matson:

The owner wishes to change the name of the East-West street from Niki Lane NE to Merissa Lane NE. This requires us to amend the approved preliminary plat and infrastructure list which we are doing with this application.

Please contact our office if you have any questions.

Sincerely,

MARK GOODWIN & ASSOCIATES, P.A.

Gregory J. Krenik, PE
Vice President

GJK/bg

f:\\A04022-Mountain Ridge\Amend PP & IL Ltr

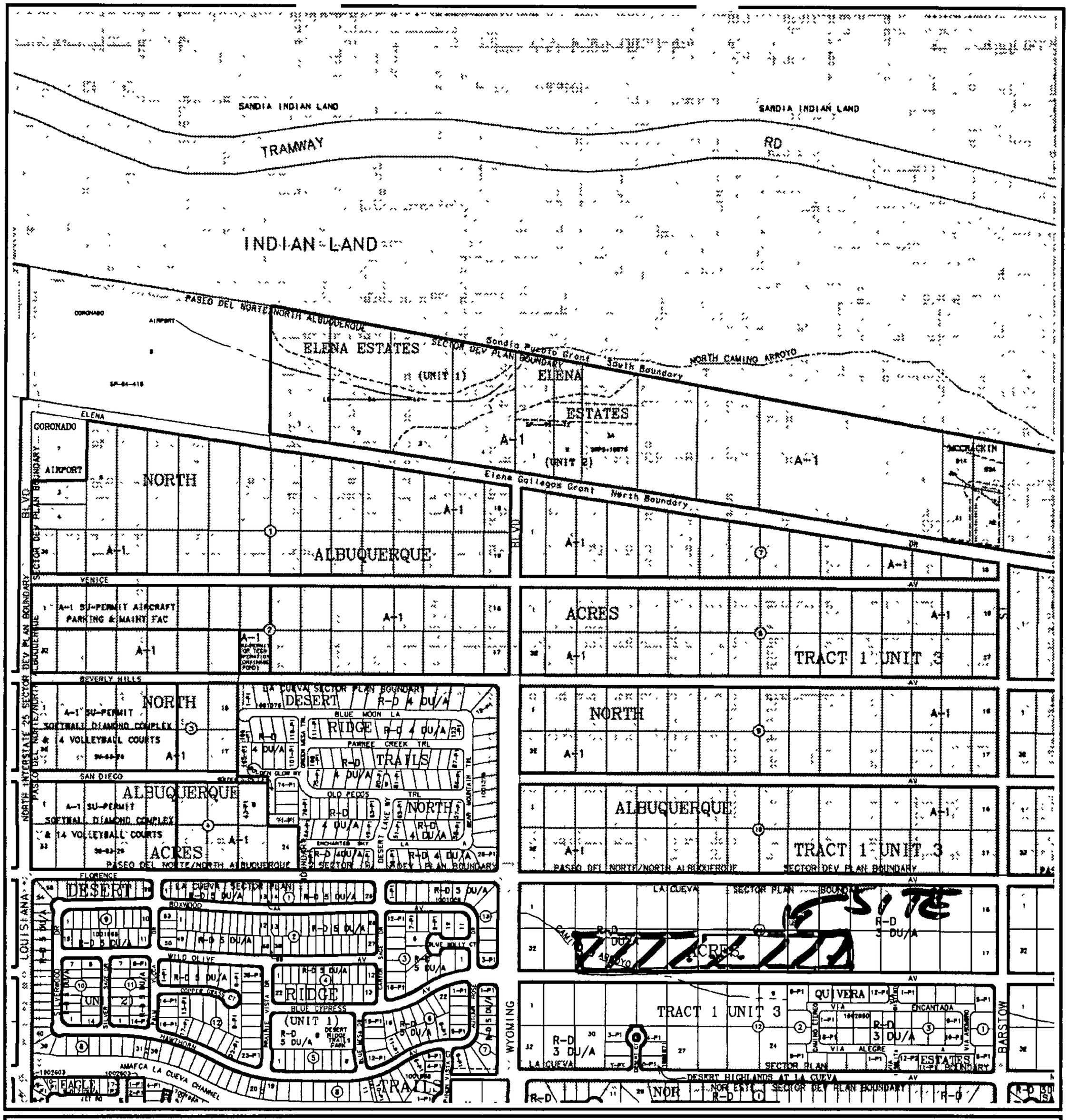

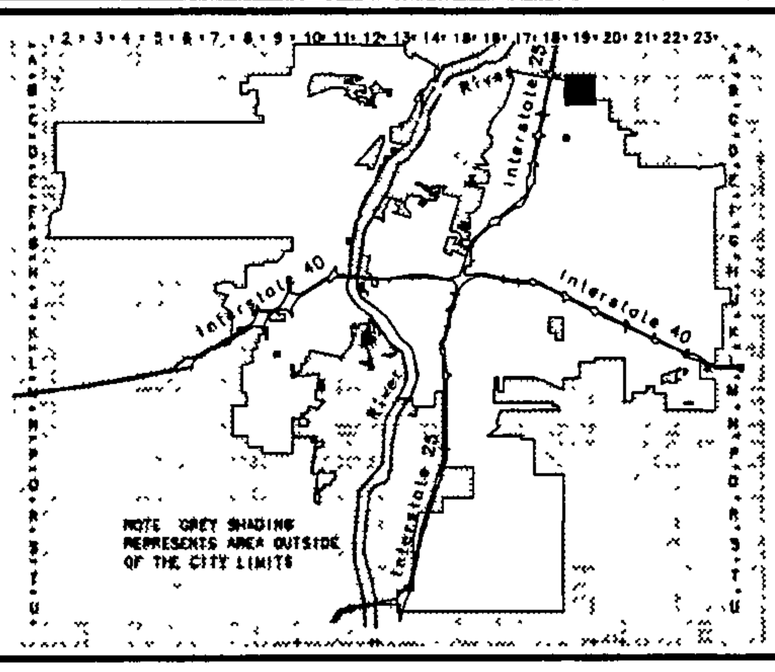

CITY OF ALBUQUERQUE · NEW MEXICO · 1706

Albuquerque Geographic Information System
PLANNING DEPARTMENT

© Copyright 2004

GRAPHIC SCALE IN FEET

250 0 750 1000

Zone Atlas Page

B-19-Z

Map Amended through August 03, 2004

ONE STOP SHOP
CITY OF ALBUQUERQUE PLANNING DEPARTMENT
Development & Building Services

PAID RECEIPT

APPLICANT NAME Quivera 2. LLC

AGENT Mark Goodwin & Assoc., PA

ADDRESS PO Box 90606

PROJECT & APP # 1003417

PROJECT NAME MOUNTAIN RIDGE SDBD.

$ 20.00 **441032/3424000 Conflict Management Fee**

$ 50.00 **441006/4983000 DRB Actions**

$ _____ **441006/4971000 EPC/AA/LUCC Actions & All Appeals**

$ _____ **441018/4971000 Public Notification**

$ _____ **441006/4983000 DRAINAGE PLAN REVIEW OR TRAFFIC IMPACT STUDY*****
( )Major/Minor Subdivision ( )Site Development Plan ( )Bldg Permit
( ) Letter of Map Revision ( )Conditional Letter of Map Revision
( ) Traffic Impact Study

$ 70.00 **TOTAL AMOUNT DUE**

******NOTE: If a subsequent submittal is required, bring a copy of this paid receipt with you to avoid an additional charge.***

ALPHA EQUITIES, LLC
PO BOX 10005
ALBUQUERQUE, NM 87184

LOS ALAMOS NATIONAL BANK
LOS ALAMOS, NM 87544
95-101/1070

10103

8/9/2004

PAY TO THE ORDER OF City of Albuquerque $ **70.00

Seventy and 00/100********** DOLLARS

Treasury Division
City of Albuquerque

8/10/2004 10:18AM LOGG ANNX
RECEIPT# 00027237 WS# 000 TRANS# 0007
ACCOUNT 441032 FUND 0110
ACTIVITY 3424000 TRSDMN
MEMO Mountain Ridge
J24 Misc $20.00

8/10/2004 10:19AM LOGG ANNX
RECEIPT# 00027232 WS# 000 TRANS# 0007
ACCOUNT 441006
ACTIVITY 4983000
Trans Amt $
J24 Misc $50.00
$70.00

⑈010103⑈ ⑆107001012⑆ 00688231⑈01

Thank You

© 2003 INTUIT INC. #7851-800-433-8610

Current DRC Project Number: ~~ORIGINAL~~

FIGURE 12

INFRASTRUCTURE LIST

EXHIBIT "A"

TO SUBDIVISION IMPROVEMENTS AGREEMENT

DEVELOPMENT REVIEW BOARD (D.R.B.) REQUIRED INFRASTRUCTURE LIST

Date Submitted: 8/2/04
Date Site Plan Approved:
Date Preliminary Plat Approved: 8/4/04
Date Preliminary Plat Expires: 8/4/05
DRB Project No.: 1003417
DRB Application No. 04-01056

1 8-18-04 NAME CHANGE
2 10-13-04 SDWKS

MOUNTAIN RIDGE SUBDIVISION

PROPOSED NAME OF PLAT AND/OR SITE DEVELOPMENT PLAN

Lots 22-30, Tract 1, Block 11, Unit 3, North Albuquerque Acres

EXISTING LEGAL DESCRIPTION PRIOR TO PLATTING ACTION

Following is a summary of PUBLIC/PRIVATE Infrastructure required to be constructed or financially guaranteed for the above development. This Listing is not necessarily a complete listing. During the SIA process and/or in the review of the construction drawings, if the DRC Chair determines that appurtenant items and/or unforeseen items have not been included in the infrastructure listing, the DRC Chair may include those items in the listing and related financial guarantee. Likewise, if the DRC Chair determines that appurtenant or non-essential items can be deleted from the listing, those items may be deleted as well as the related portions of the financial guarantees. All such revisions require approval by the DRC Chair, the User Department and agent/owner. If such approvals are obtained, these revisions to the listing will be incorporated administratively. In addition, any unforeseen items which arise during construction which are necessary to complete the project and which normally are the Subdivider's responsibility will be required as a condition of project acceptance and close out by the City.

SIA Sequence #	COA DRC Project #	Size	Type of Improvement	Location	From	To	Private Inspector	City Inspector	City Cnst Engineer
			PAVING						
		28" FF Private ~~5.88'~~ 4'	Res Pvmt C & G (Both Sides) Sidewalk (Both Sides) (1) SDWK AROUND CUL DE SACS	1 MERISSA ~~Niki~~ Lane	East Terminus	West Terminus	/	/	/
		50' FF Private 4'	Res Pvmt C & G (Both Sides) Sidewalk (Both Sides)	Ashlynn Lane	1 MERISSA ~~Niki~~ Lane	Glendale Ave	/	/	/
		24' F-E	Perm Pvmt C & G (North Side) 6' Sidewalk (North Side)	Glendale Avenue	East Prop Line	West Prop Line	/	/	/
		24' E-E	4" Temp Paving	Glendale Avenue	West Property Line	Wyoming Blvd	/	/	/
		6'	Sidewalk	40' Private Pedestrian Access Easment	1 MERISSA ~~Niki~~ Lane	Glendale Ave	/	/	/
		6'	Sidewalk	15' Private Pedestrian Access Easment	1 MERISSA ~~Niki~~ Lane	Glendale Ave	/	/	/
			WATER						
		6"	Waterline	1 MERISSA ~~Niki~~ Lane	1 East Terminus	West Terminus	/	/	/
		6"	Waterline	15' WL Easement	MERISSA ~~Niki~~ Lane	Glendale Ave	/	/	/
		6"	Waterline	40' SAS, SD, WL Esmt	MERISSA 1 ~~Niki~~ Lane	Glendale Ave	/	/	/
		8"	Waterline (2)	Glendale Ave	Wyoming Blvd	Barstow St	/	/	/
		12"	Waterline (2)	Barstow St	Glendale Ave	Modesto Ave	/	/	/
			SAS						
		8"	SAS	1 MERISSA ~~Niki~~ Lane	East Terminus	West Terminus	/	/	/

A04022

revised 07/01/01

ORIGINAL

Project name: Mountain Ridge Subdivision

SIA Sequence #	COA DRC Project #	Size	Type of Improvement	Location	From	To	Private Inspector	City Inspector	City Cnst Engineer
		8"	SAS	40' SAS, SD, WL Esmt	2 MERISSA ~~Niki~~ Lane	Glendale Ave	/	/	/
		8"	SAS (2)	Glendale Ave	Wyoming Blvd	East Prop Line			
			STORM DRAIN						
		18"	Storm Drain	2 MERISSA ~~Niki~~ Lane	2 Lot 5, Block 1	West Terminus	/	/	/
		24"	Storm Drain	40' SAS, SD, WL Esmt	MERISSA ~~Niki~~ Lane	Glendale Ave	/	/	/
		78", 84" & 96"	Storm Drain (2)	Glendale Avenue	East Prop Line	Wyoming Boulevard			

1 Sidewalks to be deferred
2 Financially Guaranteed w/. COA Project # 729781
3 Water infrastructure to include valves, fittings, valveboxes and fire hydrants.
4 Sanitary sewer to include manholes and service connections.
5 Storm Drain to includes inlets, manholes
6 Grading & Drainage Certification per DPM including Perimeter walls as shown on the Grading Plan for Release of SIA and Financial Guarantees. Financial Guarantee is not required for this item
7 Street lights per DPM

AGENT / OWNER

Gregory J. Krenik, PE
NAME (print)

MARK GOODWIN & ASSOCIATES
FIRM

8-2-04
SIGNATURE - date

MAXIMUM TIME ALLOWED TO CONSTRUCT THE IMPROVEMENTS WITHOUT A DRB EXTENSION: _____

DEVELOPMENT REVIEW BOARD MEMBER APPROVALS

8/4/04
DRB CHAIR - date

Christina Sandoval 8/4/04 CS 8/18/04
PARKS & GENERAL SERVICES - date

8-4-04
TRANSPORTATION DEVELOPMENT - date

8/18/04
AMAFCA - date

8/4/04
UTILITY DEVELOPMENT - date

_____ - date

Bob 8/18/04
Bradley J. Brigham 8/4/04
CITY ENGINEER - date

_____ - date

DESIGN REVIEW COMMITTEE REVISIONS

REVISION	DATE	DRC CHAIR	USER DEPARTMENT	AGENT /OWNER
2	10/13/04			

A04022

revised 07/01/01

3

Current DRC Project Number: ~~ORIGINAL~~

FIGURE 12

INFRASTRUCTURE LIST

Date Submitted: 8/2/04
Date Site Plan Approved
Date Preliminary Plat Approved: 8/4/04
Date Preliminary Plat Expires: 8/4/05
DRB Project No.: 1003417
DRB Application No. 04-01056

EXHIBIT "A"
TO SUBDIVISION IMPROVEMENTS AGREEMENT
DEVELOPMENT REVIEW BOARD (D.R.B.) REQUIRED INFRASTRUCTURE LIST

MOUNTAIN RIDGE SUBDIVISION

PROPOSED NAME OF PLAT AND/OR SITE DEVELOPMENT PLAN

Lots 22-30, Tract 1, Block 11, Unit 3, North Albuquerque Acres

EXISTING LEGAL DESCRIPTION PRIOR TO PLATTING ACTION

Following is a summary of PUBLIC/PRIVATE Infrastructure required to be constructed or financially guaranteed for the above development. This Listing is not necessarily a complete listing During the SIA process and/or in the review of the construction drawings, if the DRC Chair determines that appurtenant items and/or unforeseen items have not been included in the infrastructure listing, the DRC Chair may include those items in the listing and related financial guarantee. Likewise, if the DRC Chair determines that appurtenant or non-essential items can be deleted from the listing, those items may be deleted as well as the related portions of the financial guarantees. All such revisions require approval by the DRC Chair, the User Department and agent/owner. If such approvals are obtained, these revisions to the listing will be incorporated administratively. In addition, any unforeseen items which arise during construction which are necessary to complete the project and which normally are the Subdivider's responsibility will be required as a condition of project acceptance and close out by the City.

SIA Sequence #	COA DRC Project #	Size	Type of Improvement	Location	From	To	Private Inspector	City Inspector	City Cnst Engineer
			PAVING						
		28" FF	Res Pvmt	Niki Lane	East Terminus	West Terminus	/	/	/
		Private	C & G (Both Sides)						
		6'	Sidewalk (Both Sides) (1)						
		50' FF	Res Pvmt	Ashlynn Lane	Niki Lane	Glendale Ave	/	/	/
		Private	C & G (Both Sides)						
		4'	Sidewalk (Both Sides)						
		24' F-E	Perm Pvmt	Glendale Avenue	East Prop Line	West Prop Line	/	/	/
			C & G (North Side)						
		6'	Sidewalk (North Side)						
		24' E-E	4" Temp Paving	Glendale Avenue	West Property Line	Wyoming Blvd	/	/	/
		6'	Sidewalk	40' Private Pedestrian Access Easment	Niki Lane	Glendale Ave	/	/	/
		6'	Sidewalk	15' Private Pedestrian Access Easment	Niki Lane	Glendale Ave	/	/	/
			WATER						
		6"	Waterline	Niki Lane	East Terminus	West Terminus	/	/	/
		6"	Waterline	15' WL Easement	Niki Lane	Glendale Ave	/	/	/
		6"	Waterline	40' SAS, SD, WL Esmt	Niki Lane	Glendale Ave	/	/	/
		8"	Waterline (2)	Glendale Ave	Wyoming Blvd	Barstow St	/	/	/
		12"	Waterline (2)	Barstow St	Glendale Ave	Modesto Ave	/	/	/
			SAS						
		8"	SAS	Niki Lane	East Terminus	West Terminus	/	/	/

A04022

revised 07/01/01

ORIGINAL

Project name: Mountain Ridge Subdivision

SIA Sequence #	COA DRC Project #	Size	Type of Improvement	Location	From	To	Private Inspector	City Inspector	City Cnst Engineer
		8"	SAS	40' SAS, SD, WL Esmt	Niki Lane	Glendale Ave	/	/	/
		8"	SAS (2)	Glendale Ave	Wyoming Blvd	East Prop Line			
			STORM DRAIN						
		18"	Storm Drain	Niki Lane	Lot 5, Block 1	West Terminus	/	/	/
		24"	Storm Drain	40' SAS, SD, WL Esmt	Niki Lane	Glendale Ave	/	/	/
		78", 84" & 96"	Storm Drain (2)	Glendale Avenue	East Prop Line	Wyoming Boulevard			

1 Sidewalks to be deferred
2 Financially Guaranteed w/. COA Project # 729781
3 Water infrastructure to include valves, fittings, valveboxes and fire hydrants.
4 Sanitary sewer to include manholes and service connections.
5 Storm Drain to includes inlets, manholes
6 Grading & Drainage Certification per DPM including Perimeter walls as shown on the Grading Plan for Release of SIA and Financial Guarantees. Financial Guarantee is not required for this Item
7 Street lights per DPM

AGENT / OWNER

Gregory J. Krenik, PE
NAME (print)

MARK GOODWIN & ASSOCIATES
FIRM

8-2-04
SIGNATURE - date

MAXIMUM TIME ALLOWED TO CONSTRUCT THE IMPROVEMENTS WITHOUT A DRB EXTENSION: _____

DEVELOPMENT REVIEW BOARD MEMBER APPROVALS

S Matson 8/4/04
DRB CHAIR - date

Christina Sandoval 8/4/04
PARKS & GENERAL SERVICES - date

8-4-04
TRANSPORTATION DEVELOPMENT - date

AMAFCA - date

8/4/04
UTILITY DEVELOPMENT - date

_____ - date

Bradley J. Bingham 8/4/04
CITY ENGINEER - date

_____ - date

DESIGN REVIEW COMMITTEE REVISIONS

REVISION	DATE	DRC CHAIR	USER DEPARTMENT	AGENT /OWNER

A04022

revised 07/01/01

CITY OF ALBUQUERQUE

ALBUQUERQUE
Making History

PLANNING DEPARTMENT
DEVELOPMENT AND BUILDING SERVICES
HYDROLOGY DEVELOPMENT SECTION

DEVELOPMENT REVIEW BOARD--SPEED MEMO

DRB CASE NO/PROJECT NO: 1003417 **AGENDA ITEM NO: 3**

SUBJECT:

(01) Sketch Plat/Plan
(02) Bulk Land Variance
(03) Sidewalk Variance
(03a) Sidewalk Deferral
(04) Preliminary Plat
(05) Site Plan for Subd
(06) Site Plan for BP
(07) Vacation
(08) Final Plat
(09) Infrastructure List
(10) Sector Dev Plan
(11) Grading Plan
(12) SIA Extension
(13) Master Dev. Plan
(14) Cost Allocation Plan
DPM Variance

ACTION REQUESTED:

REV/CMT:() APP:(x) SIGN-OFF:() EXTN:() AMEND:()

ENGINEERING COMMENTS:

An approved drainage report dated 8-2-04 is on file for Preliminary Plat approval.

RESOLUTION: signed I.L.

APPROVED X; DENIED ____; DEFERRED ____; COMMENTS PROVIDED ___; WITHDRAWN

SIGNED-OFF: **(SEC-PLN) (SP-SUB) (SP-BP) (FP)** BY: **(UD) (CE) (TRANS) (PKS) (PLNG)**

DELEGATED: **(SEC-PLN) (SP-SUB) (SP-BP) (FP)** TO: **(UD) (CE) (TRANS) (PKS) (PLNG)**

FOR:

SIGNED: Bradley L. Bingham
City Engineer/AMAFCA Designee

DATE: August 4, 2004

P.O. Box 1293
Albuquerque
New Mexico 87103
www.cabq.gov

DRB PUBLIC HEARING SIGN IN SHEETS

CASE NUMBER: 1003417 AGENDA#: 3 DATE: 8.4.04

1. Name: Greg French Address: MAA Zip: _____

2. Name: _____ Address: _____ Zip: _____

3. Name: _____ Address: _____ Zip: _____

4. Name: _____ Address: _____ Zip: _____

5. Name: _____ Address: _____ Zip: _____

6. Name: _____ Address: _____ Zip: _____

7. Name: _____ Address: _____ Zip: _____

8. Name: _____ Address: _____ Zip: _____

9. Name: _____ Address: _____ Zip: _____

10. Name: _____ Address: _____ Zip: _____

11. Name: _____ Address: _____ Zip: _____

12. Name: _____ Address: _____ Zip: _____

13. Name: _____ Address: _____ Zip: _____

14. Name: _____ Address: _____ Zip: _____

City of Albuquerque

DEVELOPMENT/ PLAN REVIEW APPLICATION

	Supplemental form
SUBDIVISION	**S**
X Major Subdivision action	
___ Minor Subdivision action	
___ Vacation	**V**
X Variance (Non-Zoning)	
SITE DEVELOPMENT PLAN	**P**
___ ...for Subdivision Purposes	
___ ...for Building Permit	
___ IP Master Development Plan	
___ Cert. of Appropriateness (LUCC)	**L**

	Supplemental form
ZONING & PLANNING	**Z**
___ Annexation	
___ County Submittal	
___ EPC Submittal	
___ Zone Map Amendment (Establish or Change Zoning)	
___ Sector Plan (Phase I, II, III)	
___ Amendment to Sector, Area, Facility or Comprehensive Plan	
___ Text Amendment (Zoning Code/Sub Regs)	
APPEAL / PROTEST of...	**A**
___ Decision by: DRB, EPC, LUCC, Planning Director or Staff, ZHE, Zoning Board of Appeals	

PRINT OR TYPE IN BLACK INK ONLY. The applicant or agent must submit the completed application in person to the Planning Department Development Services Center, 600 2nd Street NW, Albuquerque, NM 87102. Fees must be paid at the time of application. Refer to supplemental forms for submittal requirements.

APPLICANT INFORMATION:

NAME: Alpha Equities, LLC PHONE: 922-9411

ADDRESS: PO Box 10005 FAX: 922-9418

CITY: Albuquerque STATE NM ZIP 87184 E-MAIL:

Proprietary interest in site: Owner **List all owners:**

AGENT (if any): Mark Goodwin & Associates, PA PHONE: 828-2200

ADDRESS: PO Box 90606 FAX: 797-9539

CITY: Albuquerque STATE NM ZIP 87199 E-MAIL:greg@goodwinengineers.com

DESCRIPTION OF REQUEST: Major Subdivision Application for Perliminary Plat Approval ; w/ sidewalk Deferral & Variance from DPM

Is the applicant seeking incentives pursuant to the Family Housing Development Program? ___ Yes. X No.

SITE INFORMATION: ACCURACY OF THE LEGAL DESCRIPTION IS CRUCIAL! ATTACH A SEPARATE SHEET IF NECESSARY.

Lot or Tract No. Lots 22-30, Tract 1 Block: 11 Unit: 3

Subdiv. / Addn. North Albuquerque Acres Mountain Ridge Subd. AKA Quinesta Estates Unit 2

Current Zoning: R-D3 D/UA Proposed zoning: Same

Zone Atlas page(s): B-19 No. of **existing** lots: 9 No. of **proposed** lots: 27 + 1 TR

Total area of site (acres): 9.0066 Density if applicable: dwellings per gross acre: _____ dwellings per net acre: _____

Within city limits? X Yes. No___, but site is within 5 miles of the city limits.) Within 1000FT of a landfill? No

UPC No. 101906544006940211, 101906542406940210, 101906540706940209, 101906538906940208, 101906537306940207, 101906535606940206, 101906534006840205, 101906532406840204, 101906530706840203 MRGCD Map No. _____

LOCATION OF PROPERTY BY STREETS: On or Near: Glendale Avenue NE

Between: Wyoming Boulevard NE and Barstow Street NE

CASE HISTORY:

List **any** current or prior case number that may be relevant to your application (Proj., App., DRB-, AX_,Z_, V_, S_, etc.): 1003417

Check-off if project was previously reviewed by Sketch Plat/Plan ☒, or Pre-application Review Team ☐. Date of review: 05/12/04

SIGNATURE _____ DATE 6-30-04

(Print) Gregory J. Krenik, PE ___ Applicant X Agent

FOR OFFICIAL USE ONLY Form revised 9/01, 3/03, 7/03, 10/03, **3/04**

☐ **INTERNAL ROUTING**
☐ All checklists are complete
☐ All fees have been collected
☐ All case #s are assigned
☐ AGIS copy has been sent
☐ Case history #s are listed
☐ Site is within 1000ft of a landfill
☐ F.H.D.P. density bonus
☐ F.H.D.P. fee rebate

Application case numbers	Action	S.F.	Fees
04DRB - - 01056	PP	S(2)	$ 1175.00
04DRB - - 01057	SDV	-	$ 0
04DRB - - 01058	TDS		$ 0
- -	CMF		$ 200.00
- -	AD Fee		$ 75.00
			Total $ 1270.00

Hearing date 7-28-04

7-2-04
Planner signature / date

Project # 1003417

FORM S(2): SUBDIVISION - D.R.B. PUBLIC HEARING

A **Bulk Land Variance** requires application on FORM-V in addition to application for subdivision on FORM-S.

☒ **MAJOR SUBDIVISION PRELIMINARY PLAT APPROVAL**

2 intersection.

- X Proposed Preliminary Plat including the Grading Plan (folded to fit into an 8.5" by 14" pocket) **24** copies
- X Proposed Infrastructure List
- X Design elevations & cross sections of perimeter walls
- X Zone Atlas map with the entire property(ies) precisely and clearly outlined and crosshatched (to be photocopied)
- X Letter briefly describing, explaining, and justifying the request
- X Property owner's and City Surveyor's signature on the proposed plat
- X FORM DRWS Drainage Report, Water & Sewer availability statement filing information
- X Office of Community & Neighborhood Coordination inquiry response, notifying letter, certified mail receipts
- __ Sign Posting Agreement
- X TIS/AQIA Traffic Impact Study / Air Quality Impact Assessment form
- X Fee (see schedule)
- X Any original and/or related file numbers are listed on the cover application

Preliminary plat approval expires after one year.
DRB Public hearings are approximately ONE MONTH after the filing deadline. **Your attendance is required.**

☐ **MAJOR SUBDIVISION AMENDMENT TO PRELIMINARY PLAT (with significant changes)**
☐ **MAJOR SUBDIVISION AMENDMENT TO INFRASTRUCTURE LIST (with significant changes)**
☐ **MAJOR SUBDIVISION AMENDMENT TO GRADING PLAN (with significant changes)**

PLEASE NOTE: There are no clear distinctions between significant and minor changes with regard to subdivision amendments. Significant changes are those deemed by the DRB to require public notice and public hearing.

- __ Proposed Amended Preliminary Plat, and/or Infrastructure List, and/or Grading Plan (folded to fit into an 8.5" by 14" pocket) **24** copies
- __ Original Preliminary Plat, and/or Infrastructure List, and/or Grading Plan (folded to fit into an 8.5" by 14" pocket)
- __ Zone Atlas map with the entire property(ies) precisely and clearly outlined and crosshatched (to be photocopied)
- __ Letter briefly describing, explaining, and justifying the request
- __ Property owner's and City Surveyor's signature on the proposed amended plat, if the preliminary plat is being amended
- __ Office of Community & Neighborhood Coordination inquiry response, notifying letter, certified mail receipts
- __ Sign Posting Agreement
- __ Any original and/or related file numbers are listed on the cover application

Amended preliminary plat approval expires after one year.
DRB Public hearings are approximately ONE MONTH after the filing deadline. **Your attendance is required.**

☐ **MAJOR SUBDIVISION EXTENSION OF SUBDIVISION IMPROVEMENTS AGREEMENT**
(Temporary sidewalk deferral uses FORM-V)

- __ **1** copy of each of the following items
- __ Zone Atlas map with the entire property(ies) precisely and clearly outlined and crosshatched (to be photocopied)
- __ Letter briefly describing, explaining, and justifying the request
- __ Plat or plan reduced to 8.5" x 11"
- __ Official D.R.B. Notice of the original approval
- __ Approved Infrastructure List. If not applicable, please initial. _____
- __ Previous SIA extension notice, if one has been issued. If not applicable, please initial. _____
- __ Office of Community & Neighborhood Coordination inquiry response, notifying letter, certified mail receipts
- __ Sign Posting Agreement
- __ Any original and/or related file numbers are listed on the cover application
- __ Fee (see schedule)

DRB Public hearings are approximately ONE MONTH after the filing deadline. Your attendance is required.

I, the applicant, acknowledge that any information required but not submitted with this application will likely result in deferral of actions.

GREGORY J. KRENIK
Applicant name (print)

6-30-04
Applicant signature / date

Form revised 9/01, 8/03 and **9/03**

☐ Checklists complete
☐ Fees collected
☐ Case #s assigned
☐ Related #s listed

Application case numbers
04DRB - ____ - 01056
04DRB - ____ - 01057
04DRB - ____ - 01058

7-2-04
Planner signature / date

Project # 1003417

FORM V: SUBDIVISION VARIANCES & VACATIONS

☐ **BULK LAND VARIANCE** **(Public Hearing Case)**

- ☐ Application for subdivision (Plat) on FORM S-3, including those submittal requirements. Variance and subdivision should be applied for simultaneously. (**24** copies)
- ☐ Letter briefly describing and explaining: the request, compliance with criteria in the Development Process Manual, and any improvements to be waived
- ☐ Notice on the proposed Plat that there are conditions to subsequent subdivision (refer to DPM)
- ☐ Office of Community & Neighborhood Coordination inquiry response, notifying letter, certified mail receipts
- ☐ Sign Posting Agreement
- ☐ Fee (see schedule) Fee is for Variance. Plat fee is listed on FORM-S.
- ☐ Any original and/or related file numbers are listed on the cover application

DRB Public hearings are approximately ONE MONTH after the filing deadline. **Your attendance is required.**

☐ **VACATION OF PUBLIC RIGHT-OF-WAY**

☐ **VACATION OF PUBLIC EASEMENT**

- ☐ The complete document which created the public easement (folded to fit into an 8.5" by 14" pocket) **24** copies. (Not required for dedicated and City owned public right-of-way.)
- ☐ Drawing showing the easement or right-of-way to be vacated, its relation to existing streets, etc. (folded to fit into an 8.5" by 14" pocket) **24** copies
- ☐ Zone Atlas map with the entire property(ies) precisely and clearly outlined and crosshatched (to be photocopied)
- ☐ Letter briefly describing, explaining, and justifying the request
- ☐ Office of Community & Neighborhood Coordination inquiry response, notifying letter, certified mail receipts
- ☐ Sign Posting Agreement
- ☐ Fee (see schedule)
- ☐ Any original and/or related file numbers are listed on the cover application

Unless the vacation is shown on a DRB approved plat recorded by the County Clerk within one year, it will expire.
DRB Public hearings are approximately ONE MONTH after the filing deadline. **Your attendance is required.**

☒ **SUBDIVISION DESIGN VARIANCE (VARIANCE FROM MINIMUM STANDARDS OF THE DEVELOPMENT PROCESS MANUAL)**

☐ **SIDEWALK DESIGN VARIANCE** 6

☐ **SIDEWALK WAIVER**

- ☒ Scale drawing showing the proposed variance or waiver (folded to fit into an 8.5" by 14" pocket) **6** copies for unadvertised meetings. These actions are not approved through internal routing.
- ☒ Zone Atlas map with the entire property(ies) precisely and clearly outlined and crosshatched (to be photocopied)
- ☒ Letter briefly describing, explaining, and justifying the variance or waiver
- ☒ Any original and/or related file numbers are listed on the cover application

DRB meetings are approximately 8 DAYS after the Tuesday noon filing deadline. **Your attendance is required.**

☒ **TEMPORARY DEFERRAL OF SIDEWALK CONSTRUCTION**

☐ **EXTENSION OF THE SIA FOR TEMPORARY DEFERRAL OF SIDEWALK CONSTRUCTION** 6

- ☒ Drawing showing the sidewalks subject to the proposed deferral or extension (folded to fit into an 8.5" by 14" pocket) **6** copies for unadvertised meetings. These actions are not approved through internal routing.
- ☒ Zone Atlas map with the entire property(ies) precisely and clearly outlined and crosshatched (to be photocopied)
- ☒ Letter briefly describing, explaining, and justifying the deferral or extension
- ☒ Any original and/or related file numbers are listed on the cover application

DRB meetings are approximately 8 DAYS after the Tuesday noon filing deadline. **Your attendance is required.**

☐ **VACATION OF PRIVATE EASEMENT**

- ☐ The complete document which created the private easement (folded to fit into an 8.5" by 14" pocket) **6** copies for unadvertised meetings. These actions are not approved through internal routing.
- ☐ Scale drawing showing the easement to be vacated, its relation to existing streets, etc. (folded to fit into an 8.5" by 14" pocket) **6** copies
- ☐ Zone Atlas map with the entire property(ies) precisely and clearly outlined and crosshatched (to be photocopied)
- ☐ Letter briefly describing, explaining, and justifying the vacation
- ☐ Letter of authorization from the grantors and the beneficiaries
- ☐ Fee (see schedule)
- ☐ Any original and/or related file numbers are listed on the cover application

Unless the vacation is shown on a DRB approved plat recorded by the County Clerk within one year, it will expire.
DRB meetings are approximately 8 DAYS after the Tuesday noon filing deadline. **Your attendance is required.**

I, the applicant, acknowledge that any information required but not submitted with this application will likely result in deferral of actions.

GREGORY J. KRENIK
Applicant name (print)

6-30-04
Applicant signature / date

Form revised April 2003

- ☐ Checklists complete
- ☐ Fees collected
- ☐ Case #s assigned
- ☐ Related #s listed

Application case numbers
04DRB-_____-01056
04DRB-_____-01057
04DRB-_____-01058

7-2-04
Planner signature / date

Project # 1003417

PLACE STICKER AT TOP OF ENVELOPE TO THE RIGHT OF THE RETURN ADDRESS. FOLD AT DOTTED LINE

CERTIFIED MAIL

7001 1140 0001 0568 7184

U.S. Postal Service
CERTIFIED MAIL RECEIPT
(Domestic Mail Only; No Insurance Coverage Provided)

OFFICIAL USE

Postage	$
Certified Fee	
Return Receipt Fee (Endorsement Required)	
Restricted Delivery Fee (Endorsement Required)	
Total Postage & Fees	$

Postmark Here

Sent To: Jay Rowland / Nor Esto
Street, Apt. No.; or PO Box No.: 1729 RC Gorman
City, State, ZIP+4: Alburq NM 87109

PS Form 3800, January 2001 — See Reverse for Instructions

SENDER: COMPLETE THIS SECTION

- Complete items 1, 2, and 3. Also complete item 4 if Restricted Delivery is desired.
- Print your name and address on the reverse so that we can return the card to you.
- Attach this card to the back of the mailpiece, or on the front if space permits.

1. Article Addressed to:
Jay Rowland
Nor Esto NA
1729 R.C. Gorman NE
Alburq NM 87109

COMPLETE THIS SECTION ON DELIVERY

A. Signature
X
☐ Agent
☐ Addressee

B. Received by (Printed Name)
C. Date of Delivery

D. Is delivery address different from item 1? ☐ Yes
If YES, enter delivery address below: ☐ No

3. Service Type
☐ Certified Mail ☐ Express Mail
☐ Registered ☐ Return Receipt for Merchandise
☐ Insured Mail ☐ C.O.D.

4. Restricted Delivery? (Extra Fee) ☐ Yes

2. Article Number (Transfer from service label) 7001 1140 0001 0568 7184

PS Form 3811, August 2001 Domestic Return Receipt 102595-02-M-1540

Mountain Ridge GJK

PLACE STICKER AT TOP OF ENVELOPE TO THE RIGHT OF THE RETURN ADDRESS. FOLD AT DOTTED LINE

CERTIFIED MAIL

7001 1140 0001 0568 7191

U.S. Postal Service
CERTIFIED MAIL RECEIPT
(Domestic Mail Only; No Insurance Coverage Provided)

OFFICIAL USE

Postage	$
Certified Fee	
Return Receipt Fee (Endorsement Required)	
Restricted Delivery Fee (Endorsement Required)	
Total Postage & Fees	$

Postmark Here

Sent To: Joe Yardiniean / Nor Esto
Street, Apt. No.; or PO Box No.: 7801 R.C. Gorman NE
City, State, ZIP+4: 87109

PS Form 3800, January 2001 — See Reverse for Instructions

SENDER: COMPLETE THIS SECTION

- Complete items 1, 2, and 3. Also complete item 4 if Restricted Delivery is desired.
- Print your name and address on the reverse so that we can return the card to you.
- Attach this card to the back of the mailpiece, or on the front if space permits.

1. Article Addressed to:
Joe Yardiniean
Nor Esto NA
7801 RC Gorman NE
Alburq NM 87109

COMPLETE THIS SECTION ON DELIVERY

A. Signature
X
☐ Agent
☐ Addressee

B. Received by (Printed Name)
C. Date of Delivery

D. Is delivery address different from item 1? ☐ Yes
If YES, enter delivery address below: ☐ No

3. Service Type
☐ Certified Mail ☐ Express Mail
☐ Registered ☐ Return Receipt for Merchandise
☐ Insured Mail ☐ C.O.D.

4. Restricted Delivery? (Extra Fee) ☐ Yes

2. Article Number (Transfer from service label) 7001 1140 0001 0568 7191

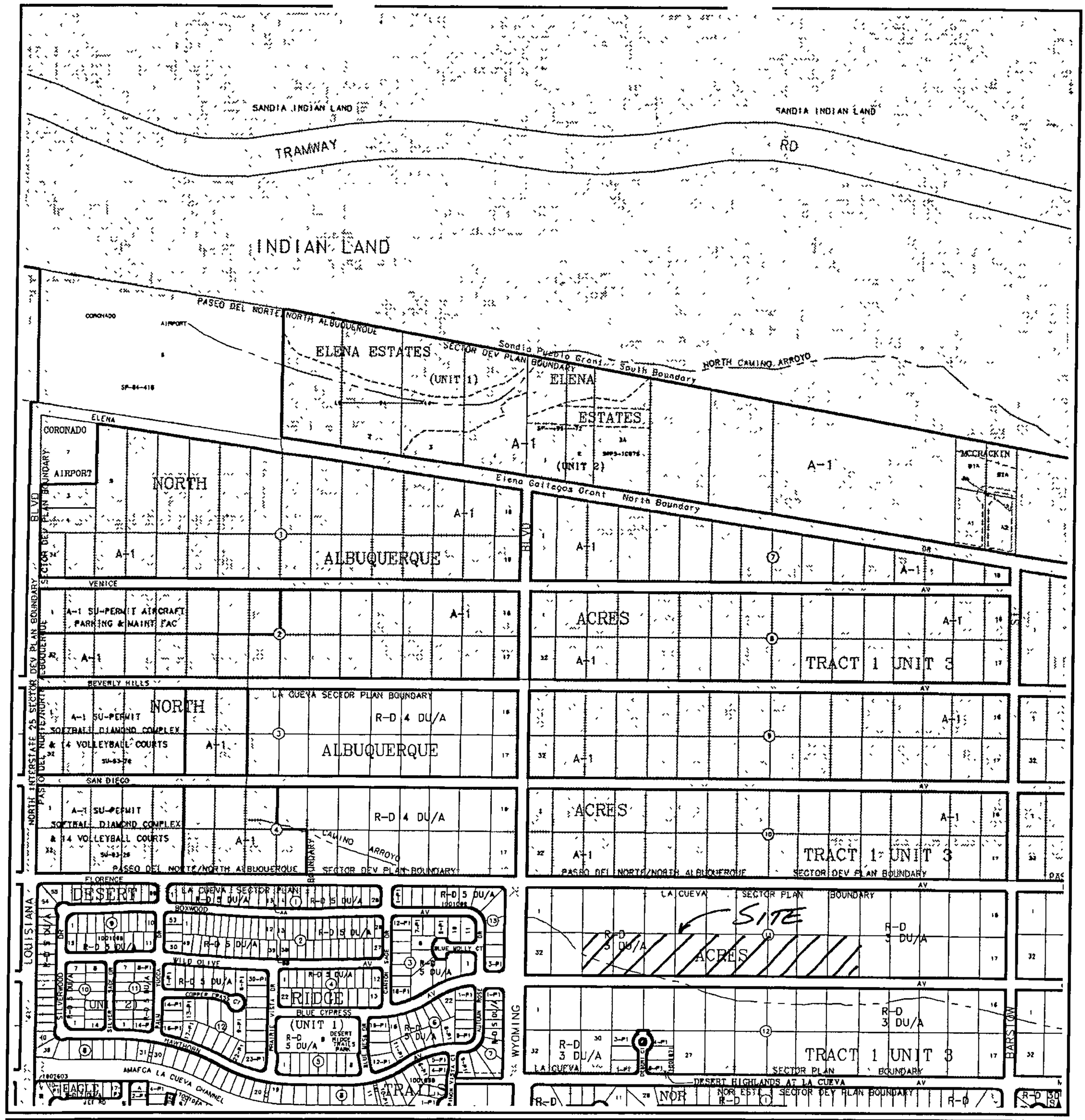

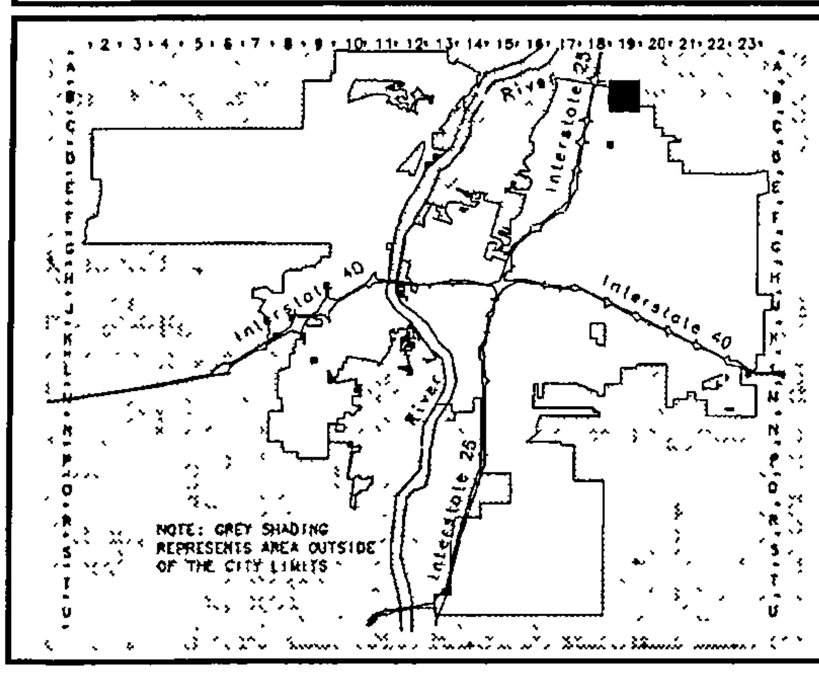

CITY OF ALBUQUERQUE · NEW MEXICO · 1706

Albuquerque Geographic Information System
PLANNING DEPARTMENT

© Copyright 2003

GRAPHIC SCALE IN FEET

250 0 750 1000

Zone Atlas Page

B-19-Z

Map Amended through November 01, 2003

D. Mark Good..... & Associates, P.A.
Consulting Engineers
P.O. BOX 90606, ALBUQUERQUE,NM 87199
(505) 828-2200 FAX 797-9539
e-mail: goodwinengrs@comcast.net

June 29, 2004

Ms. Sheran Matson
DRB Chair
City of Albuquerque
P.O. Box 1293
Albuquerque, NM 87103

Re: Mountain Ridge Subdivision (aka Quivera Estates, Unit 2) DRB # 1003417

Dear Ms. Matson:

The owner of the above referenced project wishes to subdivide 9 North Albuquerque lots into 27 single-family home lots and 1 tract. The property is zoned RD-3. The owner would also like to defer temporarily the construction of sidewalks on the interior and request a variance from the minimum standards of the DPM by constructing the sidewalk at the back of curb within the subdivision. The roads are private and gated.

Please contact our office if you have any questions.

Sincerely,

MARK GOODWIN & ASSOCIATES, PA

Gregory J. Krenik, PE
Vice President

GJK/bg

f:\\a04022-mountain ridge\variance letter DRB

FORM DRWS: DRAINAGE REPORT / WATER & SEWER AVAILABILITY

THIS FORM IS REQUIRED WITH THE DEVELOPMENT REVIEW BOARD APPLICATION FOR MAJOR SUBDIVISIONS AND SITE DEVELOPMENT PLANS.

PROJECT NAME Mountain Ridge Subdivision

AGIS MAP # B-19

LEGAL DESCRIPTION Lots 22-30, Tract 1, Block 11, Unit 3, NAA

X **DRAINAGE REPORT**

A drainage report, as per the Drainage Ordinance, was submitted to the City of Albuquerque Public Works Department, Hydrology Division (2nd floor Plaza del Sol) on 6-29-04 [date].

Applicant / Agent — Date 6-30-04

Hydrology Division Representative — Date

X **WATER AND SEWER AVAILABILITY STATEMENT**

A Water and Sewer Availability Statement for this project was ~~requested~~ recieved from the City of Albuquerque Utilities Development Division (2nd floor Plaza del Sol) on 5-11-04 [date].

Applicant / Agent — Date 6-30-04

Utilities Division Representative — Date

DRB# ____ - 1003417

City of Albuquerque

PLEASE NOTE: The Neighborhood Association information listed in this letter is valid for one (1) month. If you haven't filed your application within one (1) month of the date of this letter – you will need to get an updated letter from our office. It is your responsibility to provide current information – outdated information may result in a deferral of your case.

Date: June 29, 2004

TO CONTACT NAME: Susan Rasinski
COMPANY/AGENCY: Mark Goodwin and Associates, PA
ADDRESS/ZIP: PO Box 90606 / 87199
PHONE/FAX #: 828-2200 Fax - 797-9539

Thank you for your inquiry of 6-29-04 (date) requesting the names of **Recognized Neighborhood Associations** who would be affected under the provisions of O-92 by your proposed project at Lots 22-30, Block 11, Tract 1, Unit 3, North Albuquerque Acres

zone map page(s) B19.

Our records indicate that the **Recognized Neighborhood Association(s)** affected by this proposal and the contact names are as follows:

NOR ESTE

Neighborhood Association

Contacts: JAY ROWLAND
7729 R.C. GORMAN AVE NE / 87122
797-0853 (h)
JOE YARDUMIAN
7801 R.C. GORMAN AVE NE / 87109
797-1851 (h)

Neighborhood Association

Contacts:

See reverse side for additional Neighborhood Association Information: YES {✓} NO { }

Please note that according to O-92 you are required to notify each of these contact persons by **CERTIFIED MAIL, RETURN RECEIPT REQUESTED, BEFORE** the Planning Department will accept your application filing. ***IMPORTANT! FAILURE OF ADEQUATE NOTIFICATION MAY RESULT IN YOUR APPLICATION HEARING BEING DEFERRED FOR 30 DAYS.*** If you have any questions about the information provided, please contact our office at (505) 924-3914 or by fax at 924-3913.

Sincerely,

Stephen Wade

OFFICE OF NEIGHBORHOOD COORDINATION

Attention: Both contacts per neighborhood association need to be notified.

planning.recognized.na.form(12/03)

CITY OF ALBUQUERQUE

TRAFFIC IMPACT STUDY (TIS) / ENVIRONMENTAL HEALTH INFORMATION FORM

TO BE COMPLETED BY APPLICANT

APPLICANT: ALPHA EQUITIES, LLC **Date of request:** 6/30/04 **Zone atlas page(s):** B-19

CURRENT:

Zoning R-D3

Parcel Size (acres / sq.ft.) 9.0066

Legal Description -

Lot or Tract # 22-30, TRACT 1 Block # 11

Subdivision Name NORTH ALBUQUERQUE ACRES

REQUESTED CITY ACTION(S):

Annexation	[ ]	Sector Plan	[ ]	Site Development Plan:		Building Permit	[ ]
Comp. Plan		Zone Change	[ ]	a) Subdivision	[ ]	Access Permit	[ ]
Amendment	[ ]	Conditional Use	[ ]	b) Build'g Purposes	[ ]	Other	[X]
				c) Amendment	[ ]	PRELIMINARY PLAT	

PROPOSED DEVELOPMENT:

No construction / development [ ]

New Construction [X]

Expansion of existing development [ ]

GENERAL DESCRIPTION OF ACTION: [1]

# of units - 27

Building Size - _____(sq. ft.)

Notes: 1. Changes made to development proposals / assumptions, from the information provided above, may change the TIS or AQIA analysis requirements.

Applicant or Representative _____ Date _____

(To be signed upon completion of processing by Traffic Engineer and Environmental Health)

TRANSPORTATION DEVELOPMENT

TRAFFIC IMPACT STUDY (TIS) REQUIRED: YES [ ] NO [ ] BORDERLINE [ ]

Planning Dept., Dev. & Bldg. Services Div., Transportation Dev. Section - 2nd FL. 600 2nd St. NW Plaza del Sol Bldg. 924-3994

THRESHOLDS MET? YES [ ] NO [ ] Mitigating reasons for not requiring **TIS:** Previously studied: [ ]

Notes:

IF A TIS IS REQUIRED: A scoping meeting (as outlined in the Development Process Manual) must be held to define the level of analysis needed and the parameters of the study. **Any subsequent changes to the development proposal identified above may require an update or new TIS.**

_____ _____

TRAFFIC ENGINEER DATE

ENVIRONMENTAL HEALTH

Per letter dated August 7, 2003 from the Director of the Environmental Health Department to the Director of the Planning Department, "all 5 CO monitors within Bernalillo County are yielding 8-hour average CO levels at less than 50% of the Federal CO standard ..." and "based on our review of the available scientific data, we do not foresee a circumstance where preparation of a detailed air quality study for a land use development will be warranted - regardless of the project size, location or traffic generated".

Required **TIS** **must be completed prior to applying to the EPC.** Arrangements must be made prior to submittal if a variance to this procedure is requested and noted on this form, otherwise the application may not be accepted or deferred if the arrangements are not complied with.

TIS **- SUBMITTED** ___/___/___ _____ _____

- FINALIZED ___/___/___ TRAFFIC ENGINEER DATE

D. Mark Goodwin & Associates, P.A.
Consulting Engineers
P.O. BOX 90606, ALBUQUERQUE,NM 87199
(505) 828-2200 FAX 797-9539
e-mail: goodwinengrs@comcast.net

June 28, 2004

Mr. Jay Rowland
Nor Este Neighborhood Association
7729 R. C. Gorman Ave NE
Albuquerque, NM 87109

Mr. Joe Yardimian
Nor Este Neighborhood Association
7801 R. C. Gorman Ave NE
Albuquerque, NM 87109

Re: Mountain Ridge

Dear Mr. Rowland and Mr. Yardimian:

Enclosed please find a copy of the Design Review Board application to the City of Albuquerque for Preliminary Plat for the referenced project. The anticipated date to be heard July 28, 2004. Please contact Gregory J. Krenik of our office if you have any questions or concerns.

Sincerely,

MARK GOODWIN & ASSOCIATES, PA

Susan Rasinski

Susan Rasinski
Executive Assistant

/sr

Enclosure

f:\\4022-mountain ridge\neighborhood assoc.wpd

ONE STOP SHOP
CITY OF ALBUQUERQUE PLANNING DEPARTMENT
Development & Building Services

PAID RECEIPT

APPLICANT NAME Alpha Equities, LLC

AGENT Mark Goodwin & Assoc

ADDRESS

PROJECT & APP #

PROJECT NAME Mountain Ridge Subdivision

City Of Albuquerque
Treasury Division
7/2/2004 11:00AM LOC: ANNX
RECEIPT# 00025973 WS# 008 TRANS# 0012
Account 441018 Fund 0110
Activity 4971000 TRSDMM
Trans Amt $1,270.00
J24 Misc $75.00
CHANGE $1,270.00
Ck $0.00
Thank You

$ 20.00 **441032/3424000 Conflict Management Fee**

$ 1175.00 **441006/4983000 DRB Actions**

$ _____ **441006/4971000 EPC/AA/LUCC Actions & All Appeals**

$ 75.00 **441018/4971000 Public Notification**

$ _____ **441006/4983000 DRAINAGE PLAN REVIEW OR TRAFFIC IMPACT STUDY*****
( )Major/Minor Subdivision ( )Site Development Plan ( )Bldg Permit
( ) Letter of Map Revision ( )Conditional Letter of Map Revision
( ) Traffic Impact Study

$ 1270.00 **TOTAL AMOUNT DUE**

******NOTE: If a subsequent submittal is required, bring a copy of this paid receipt with you to avoid an* additional charge.**

ALPHA EQUTIES, LLC
501 - 3RD STREET SW PH. 505-248-1688
ALBUQUERQUE, NM 87102

2047
95-101/1070

6/24/04
DATE

PAY TO THE ORDER OF City of Alb. $ 1,270 -

One thousand two hundred seventy & 00/100 DOLLARS

Security Features Details on Back

Los Alamos NATIONAL BANK
P.O. Box 60 Los Alamos, NM 87544 (505) 662-5171

FOR Thank You

⑆107001012⑆ 2047⑈ 006882311⑈01

© HARLAND 2001

DUPLICATE
City of Albuquerque
Treasury Division
7/2/2004 11:00AM LOC: ANNX
RECEIPT# 0002597 WS# 008 TRANS# 0012
Account 441018 Fund 0110
Activity 4983000 TRSDMM
Trans Amt $1,270.00
J24 Misc $1,175.00

Thank You

SIGN POSTING AGREEMENT

REQUIREMENTS

POSTING SIGNS ANNOUNCING PUBLIC HEARINGS

All persons making application to the City under the requirements and procedures established by the City Zoning Code or Subdivision Ordinance are responsible for the posting and maintaining of one or more signs on the property which the application describes. Vacations of public rights-of-way (if the way has been in use) also require signs. Waterproof signs are provided at the time of application. If the application is mailed, you must still stop at the Development Services Front Counter to pick up the sign.

The applicant is responsible for ensuring that the signs remain posted throughout the 15-day period prior to public hearing. Failure to maintain the signs during this entire period may be cause for deferral or denial of the application. Replacement signs for those lost or damaged are available from the Development Services Front Counter at a charge of $3.50 each.

1. LOCATION

   A. The sign shall be conspicuously located. It shall be located within twenty feet of the public sidewalk (or edge of public street). Staff may indicate a specific location.
   B. The face of the sign shall be parallel to the street, and the bottom of the sign shall be at least two feet from the ground.
   C. No barrier shall prevent a person from coming within five feet of the sign to read it.

2. NUMBER

   A. One sign shall be posted on each paved street frontage. Signs may be required on unpaved street frontages.
   B. If the land does not abut a public street, then, in addition to a sign placed on the property, a sign shall be placed on and at the edge of the public right-of-way of the nearest paved City street. Such a sign must direct readers toward the subject property by an arrow and an indication of distance.

3. PHYSICAL POSTING

   A. A heavy stake with two crossbars or a full plywood backing works best to keep the sign in place, especially during high winds.
   B. Large headed nails or staples are best for attaching signs to a post or backing; the sign tears out less easily.

4. TIME

Signs must be posted from 7-13-04 To 7-28-04

5. REMOVAL

   A. The sign is not to be removed before the initial hearing on the request.
   B. The sign should be removed within five (5) days after the initial hearing.

I have read this sheet and discussed it with the Development Services Front Counter Staff. I understand (A) my obligation to keep the sign(s) posted for (15) days and (B) where the sign(s) are to be located. I am being given a copy of this sheet.

Lorraine Davis Mark Goodwin & Assoc. 7-2-04
(Applicant or Agent) (Date)

I issued 1 signs for this application, 7-2-04, [signature]
(Date) (Staff Member)

DRB PROJECT NUMBER: 1003417

Rev. 5/9/03

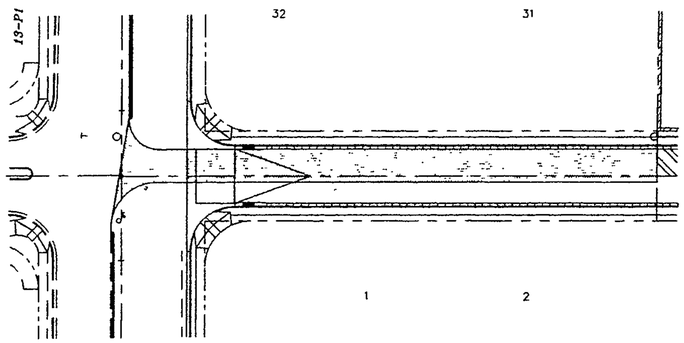

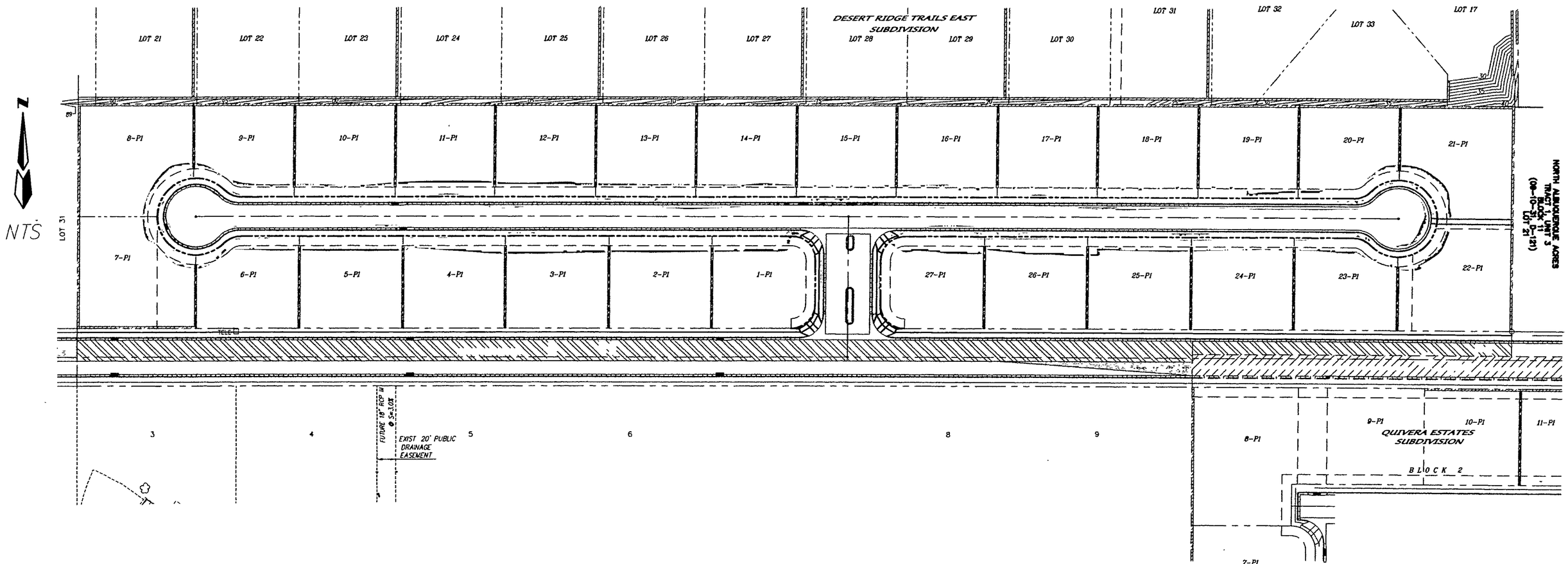

LEGEND

SIDEWALK DEFERRAL

DPM VARIANCE

EXHIBIT C

Date 7/28/04

MOUNTAIN RIDGE SUBDIVISION SIDEWALK EXHIBIT

dmg MARK GOODWIN & ASSOCIATES, P.A.
CONSULTING ENGINEERS
P.O. BOX 90606
ALBUQUERQUE, NEW MEXICO 87199
(505) 828-2200, FAX (505) 797-9539

A4022OLIV2\PLANS\A4022-EXHIBIT-SD\06-29-04\ MJR NHF ACH

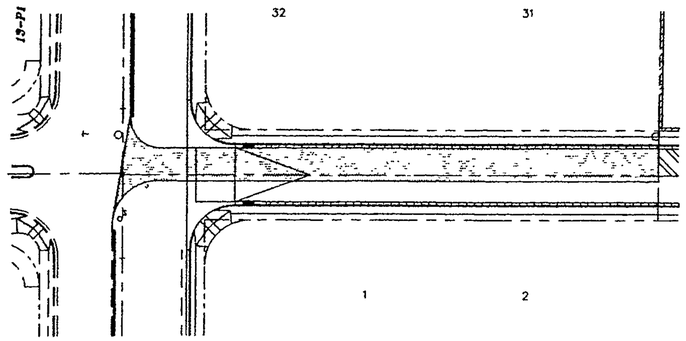

PERIMETER WALL DESIGN PROJECT DATA

NAME: MOUNTAIN RIDGE SUBDIVISION
ZONE ATLAS PAGE: B-19
DRB PROJECT: 1003417
LOCATION: THE NE CORNER OF GLENDALE AVE NE AND WYOMING BOULEVARD NE

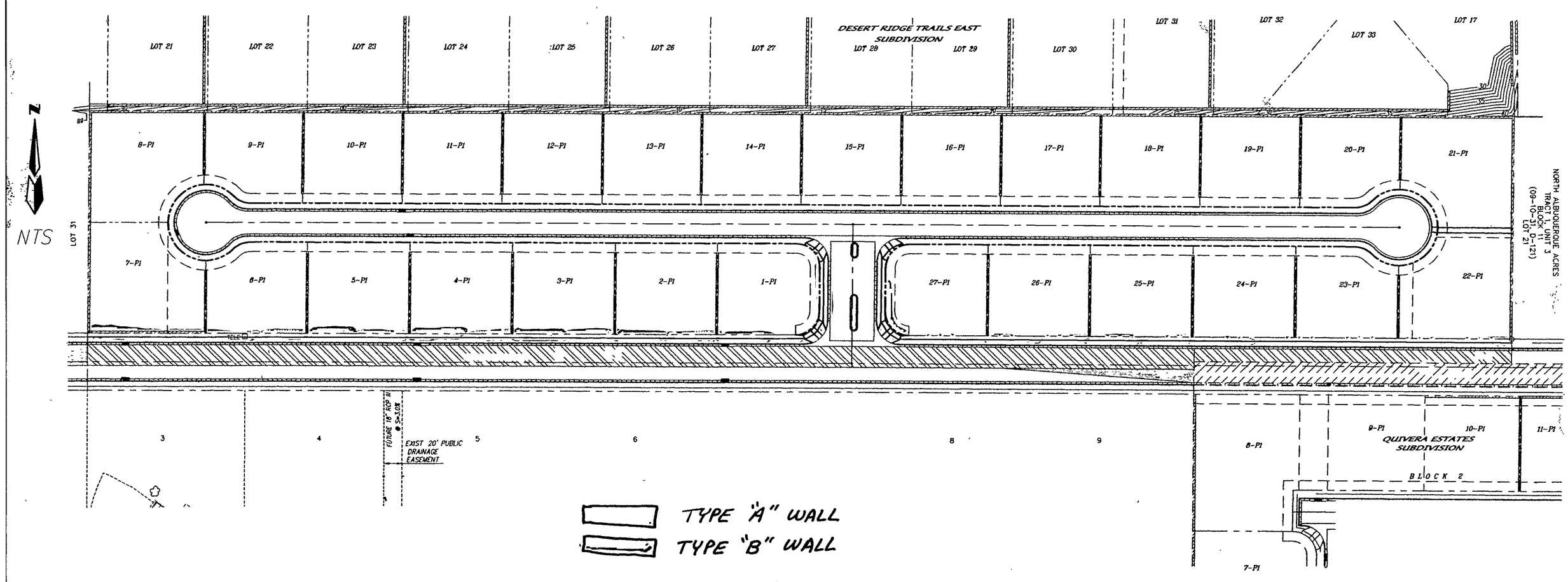

dmg MARK GOODWIN & ASSOCIATES, P.A.
CONSULTING ENGINEERS
P.O. BOX 90606
ALBUQUERQUE, NEW MEXICO 87199
(505) 828-2200, FAX (505) 797-9539

MOUNTAIN RIDGE SUBDIVISION PERIMETER WALL EXHIBIT

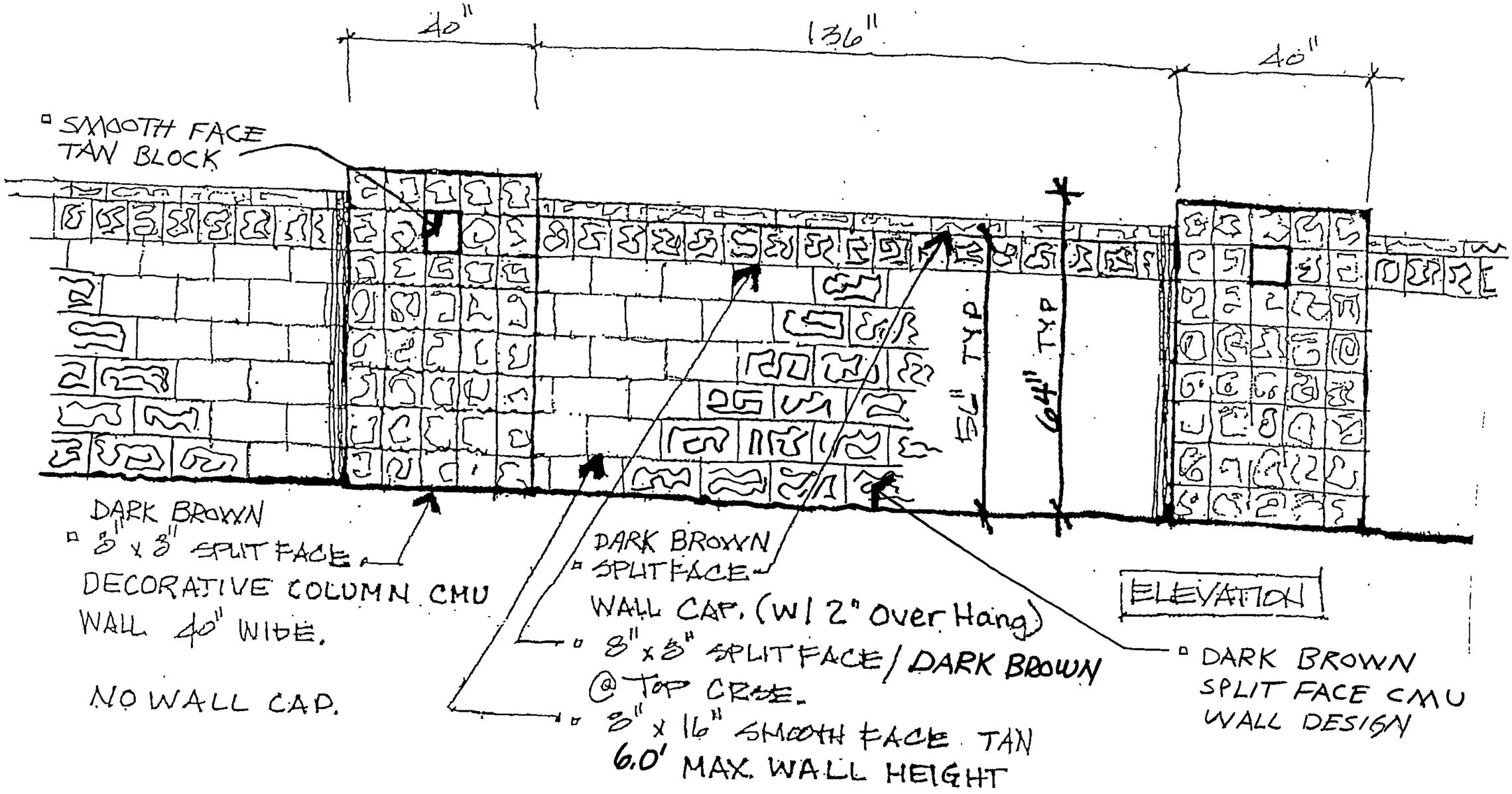

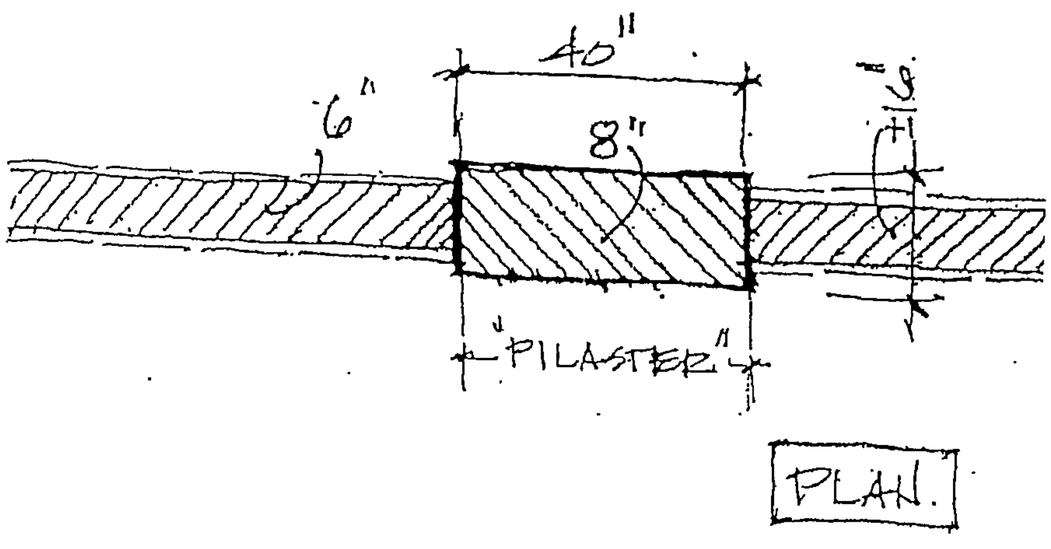

PERIMETER WALL DESIGN PROJECT DATA

NAME:	MOUNTAIN RIDGE SUBDIVISION - WALL TYPE "A"
ZONE ATLAS PAGE:	B-19
DRB PROJECT:	1003417
LOCATION:	THE NE CORNER OF GLENDALE AVE NE AND WYOMING BOULEVARD NE

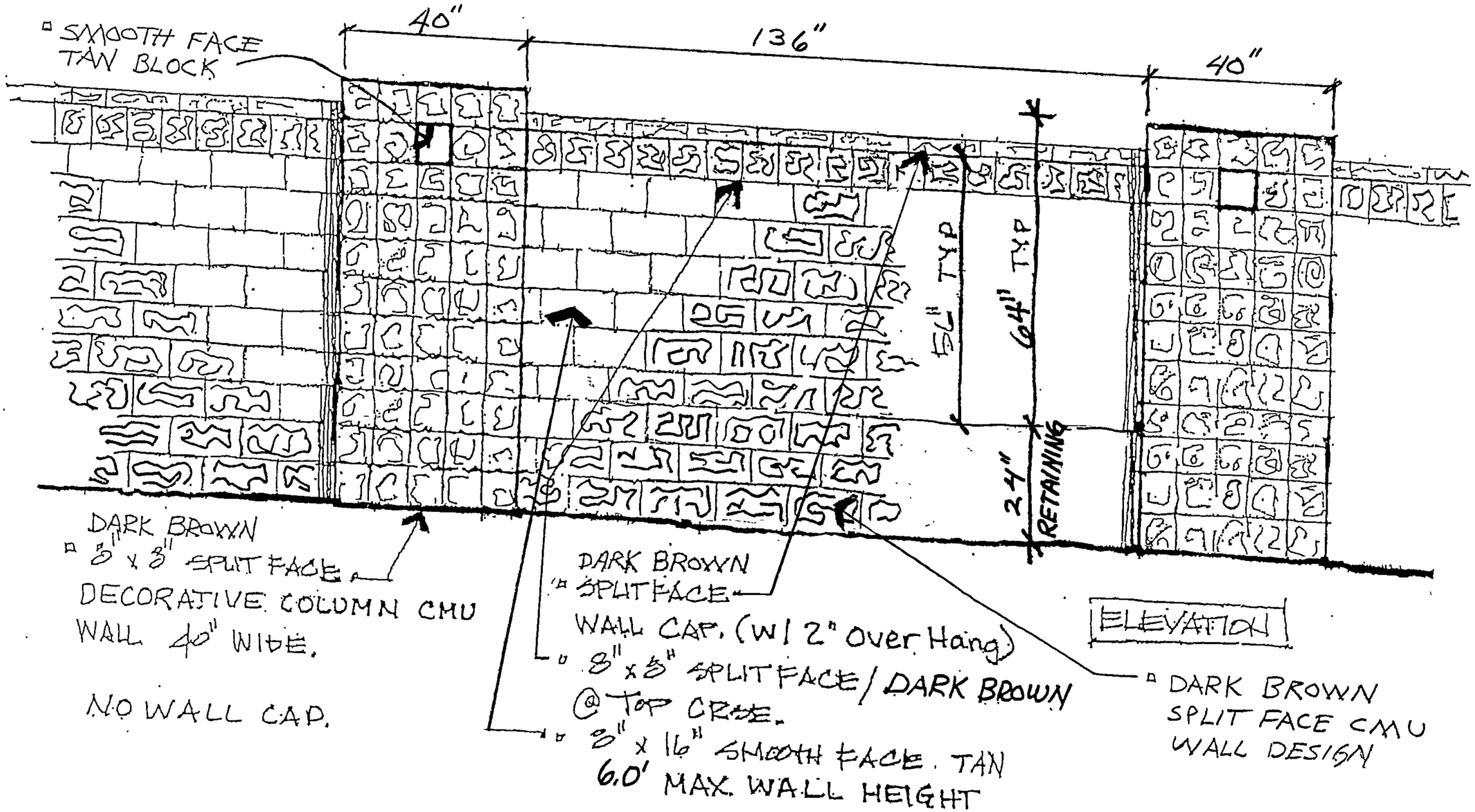

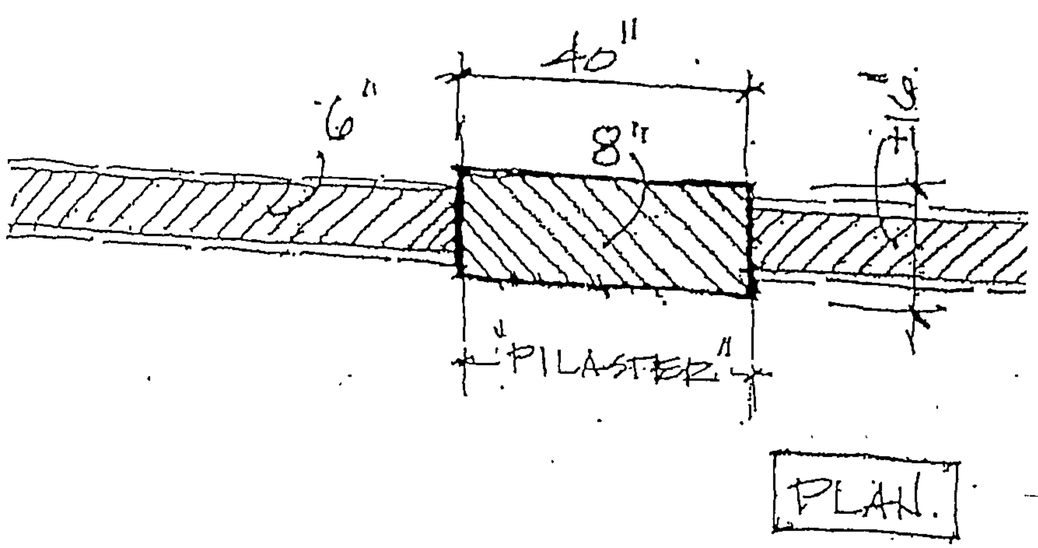

PERIMETER WALL DESIGN PROJECT DATA

NAME: MOUNTAIN RIDGE SUBDIVISION - WALL TYPE "B"
ZONE ATLAS PAGE: B-19
DRB PROJECT: 1003417
LOCATION: THE NE CORNER OF GLENDALE AVE NE AND WYOMING BOULEVARD NE

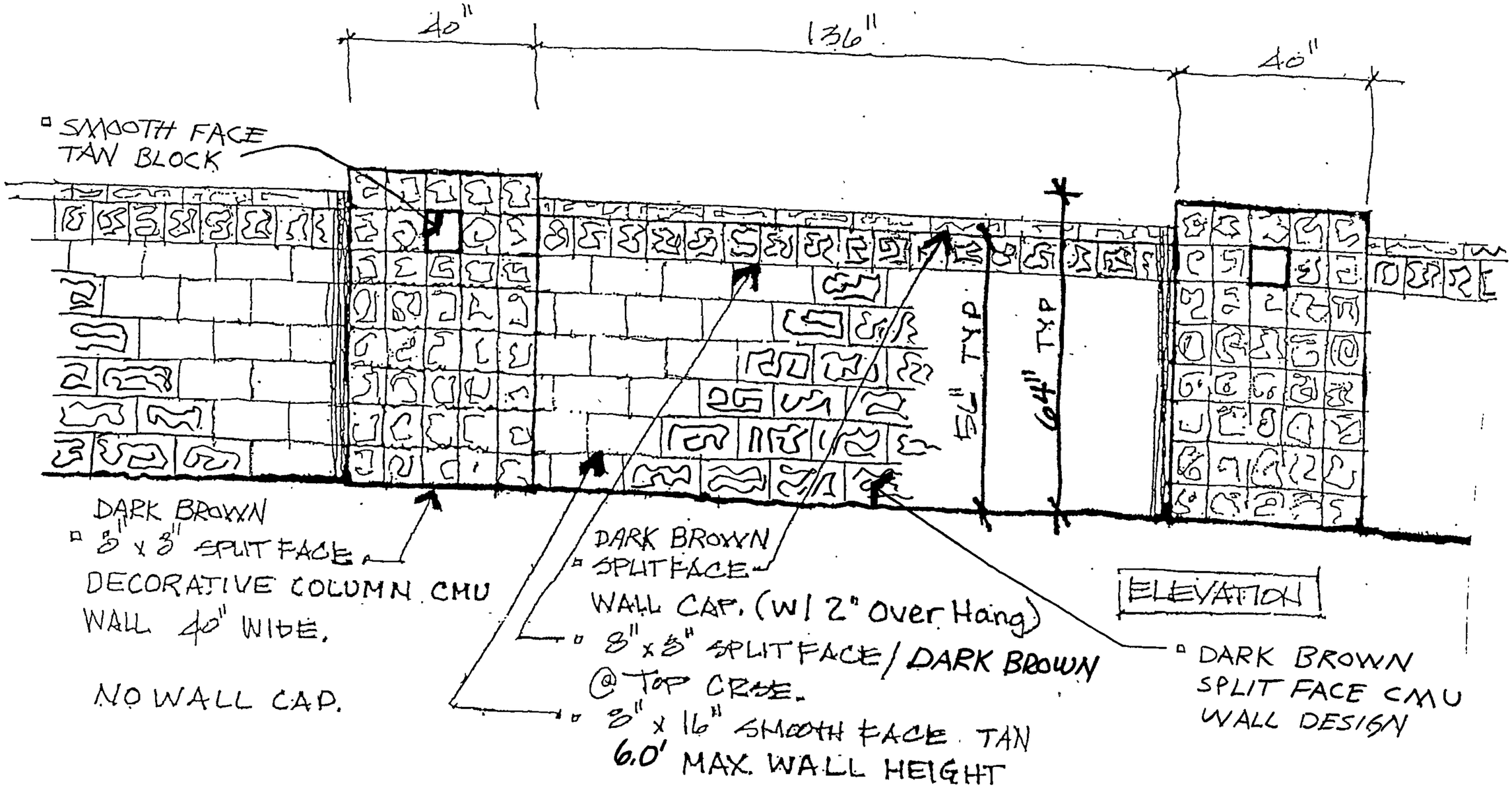

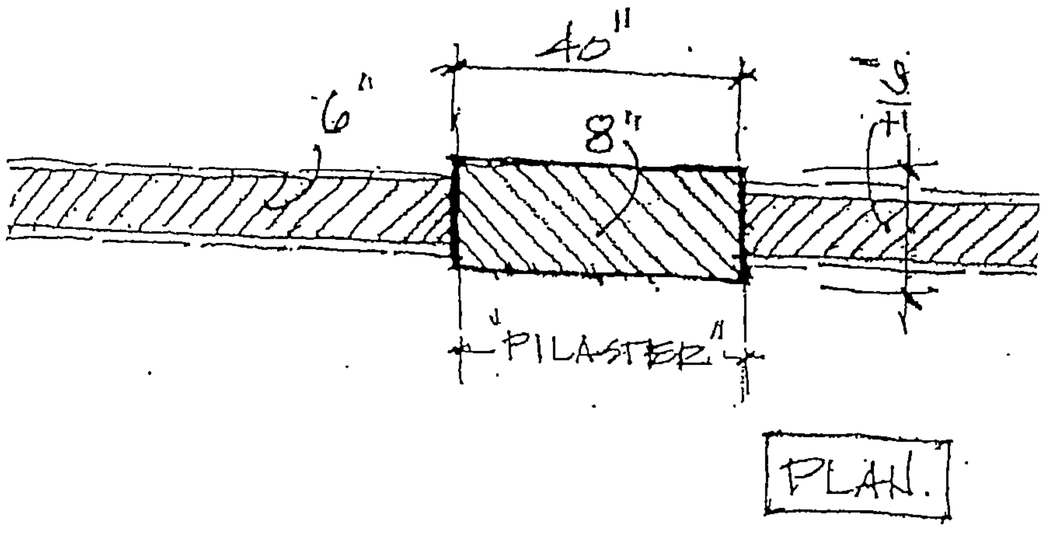

PERIMETER WALL DESIGN PROJECT DATA

NAME: MOUNTAIN RIDGE SUBDIVISION - WALL TYPE "A"
ZONE ATLAS PAGE: B-19
DRB PROJECT: 1003417
LOCATION: THE NE CORNER OF GLENDALE AVE NE AND WYOMING BOULEVARD NE

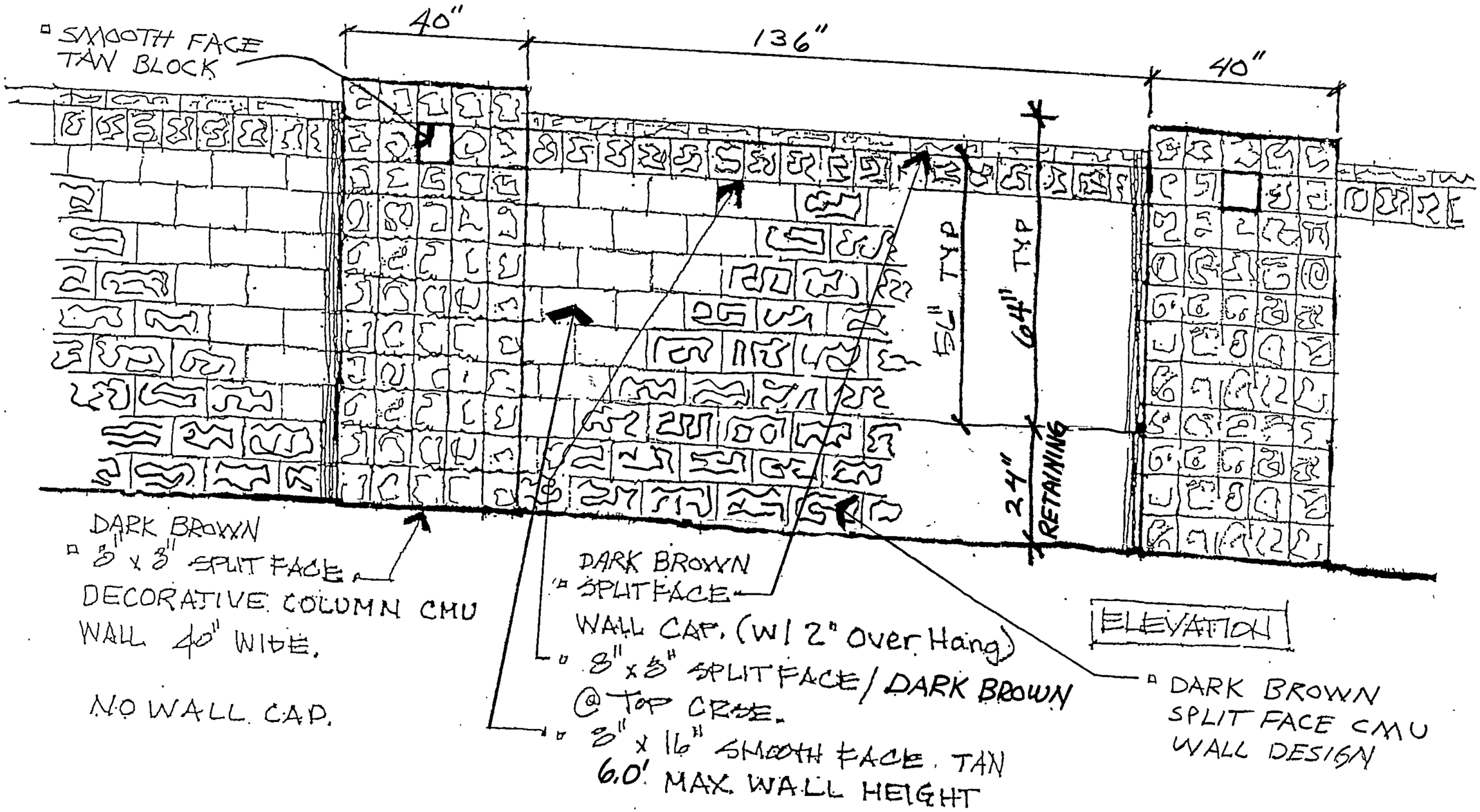

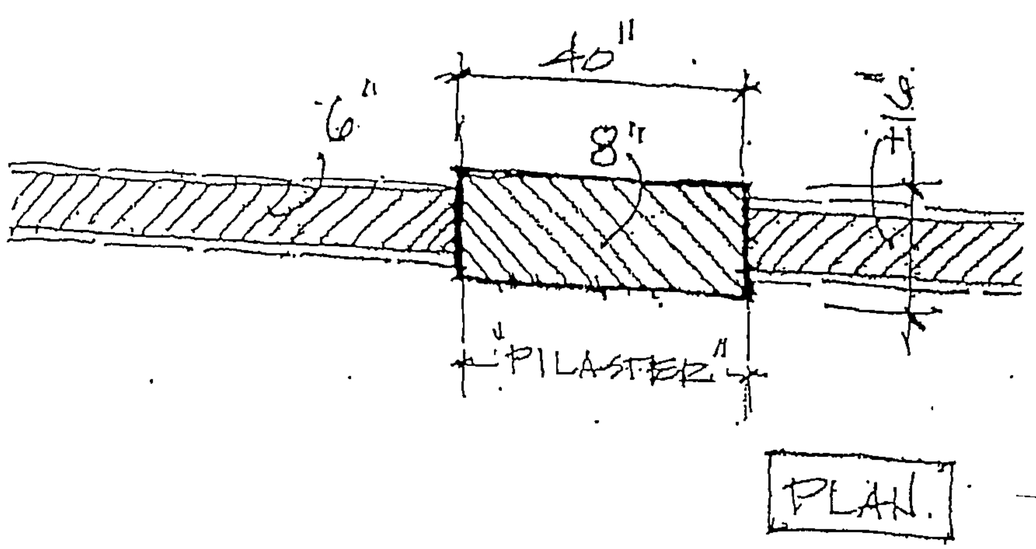

PERIMETER WALL DESIGN PROJECT DATA

NAME: MOUNTAIN RIDGE SUBDIVISION - WALL TYPE "B"
ZONE ATLAS PAGE: B-19
DRB PROJECT: 1003417
LOCATION: THE NE CORNER OF GLENDALE AVE NE AND WYOMING BOULEVARD NE

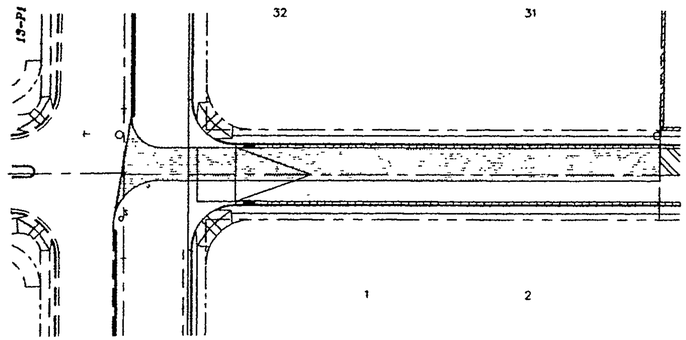

PERIMETER WALL DESIGN PROJECT DATA

NAME: MOUNTAIN RIDGE SUBDIVISION
ZONE ATLAS PAGE: B-19
DRB PROJECT: 1003417
LOCATION: THE NE CORNER OF GLENDALE AVE NE AND WYOMING BOULEVARD NE

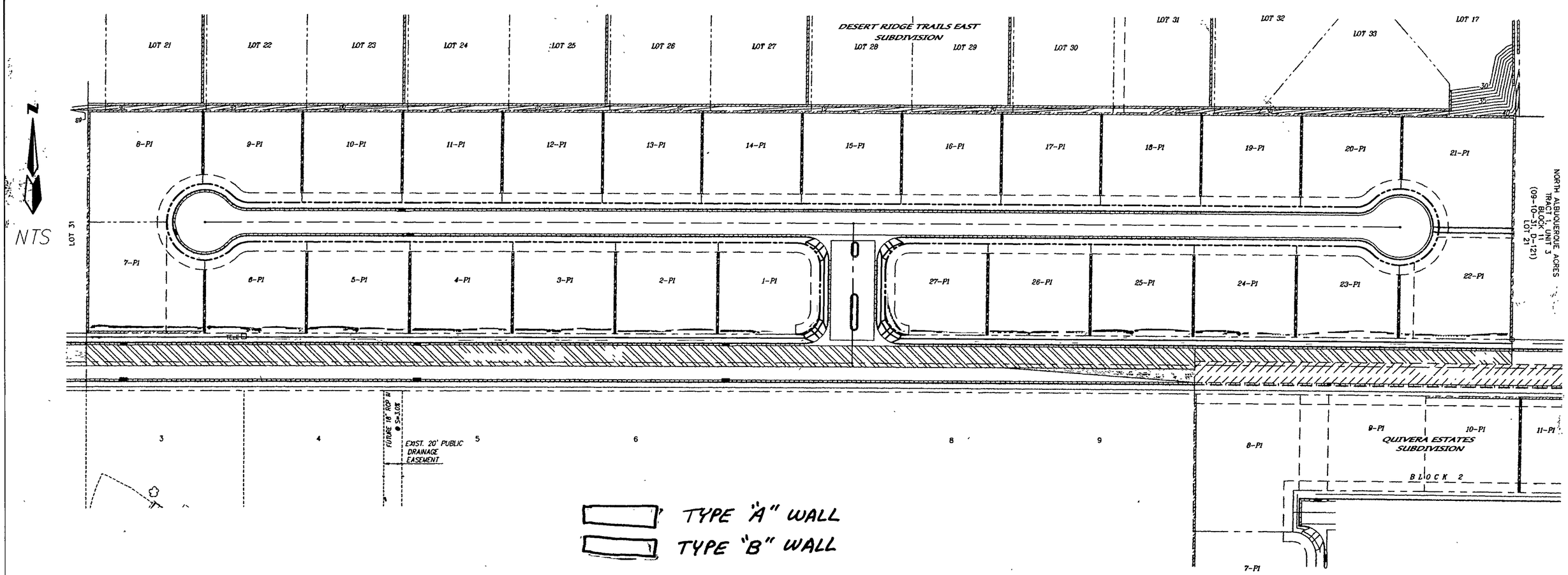

dmg MARK GOODWIN & ASSOCIATES, P.A.
CONSULTING ENGINEERS
P.O. BOX 90606
ALBUQUERQUE, NEW MEXICO 87199
(505) 828-2200, FAX (505) 797-9539

MOUNTAIN RIDGE SUBDIVISION PERIMETER WALL EXHIBIT

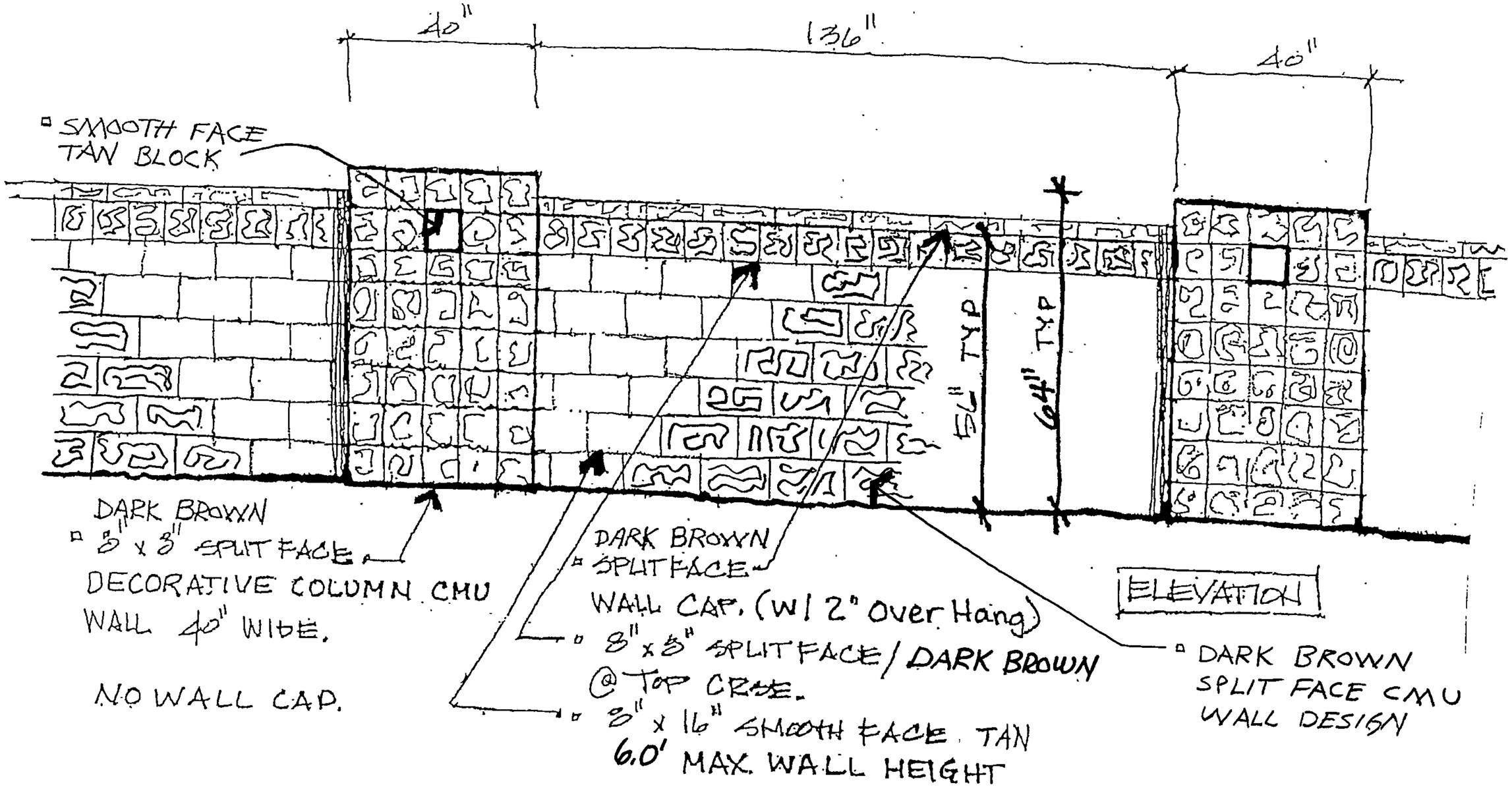

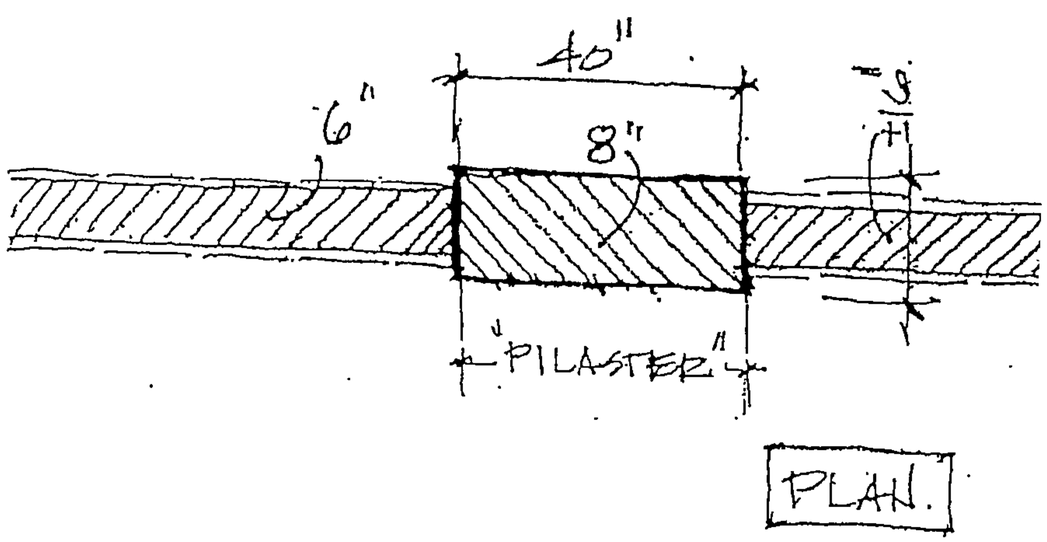

PERIMETER WALL DESIGN PROJECT DATA

NAME: MOUNTAIN RIDGE SUBDIVISION - WALL TYPE "A"
ZONE ATLAS PAGE: B-19
DRB PROJECT: 1003417
LOCATION: THE NE CORNER OF GLENDALE AVE NE AND WYOMING BOULEVARD NE

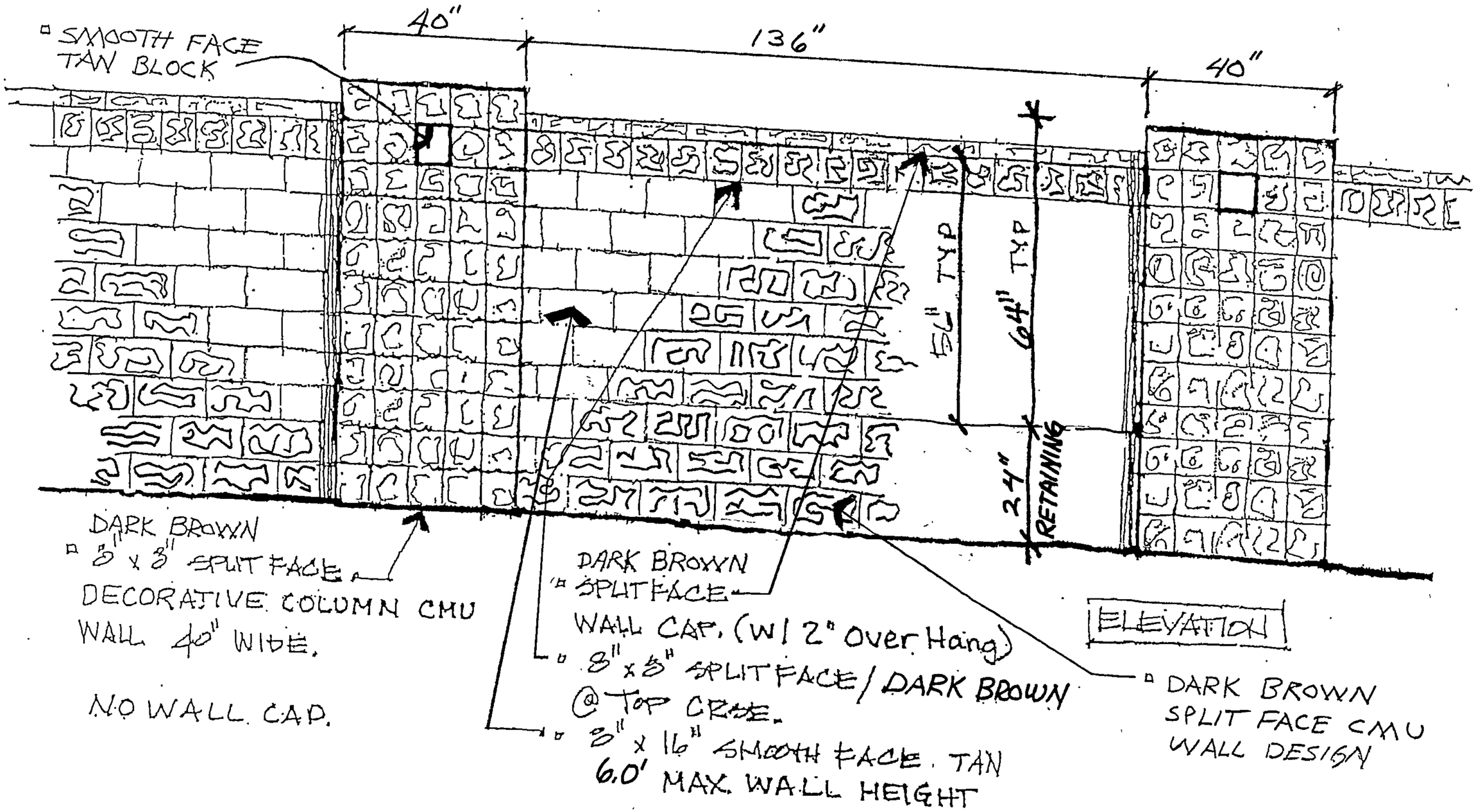

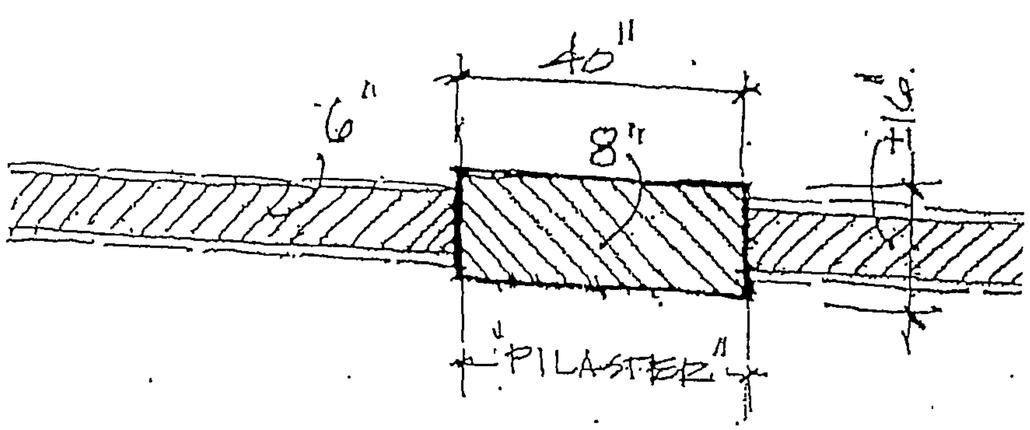

PERIMETER WALL DESIGN PROJECT DATA

NAME: MOUNTAIN RIDGE SUBDIVISION - WALL TYPE "B"
ZONE ATLAS PAGE: B-19
DRB PROJECT: 1003417
LOCATION: THE NE CORNER OF GLENDALE AVE NE AND WYOMING BOULEVARD NE

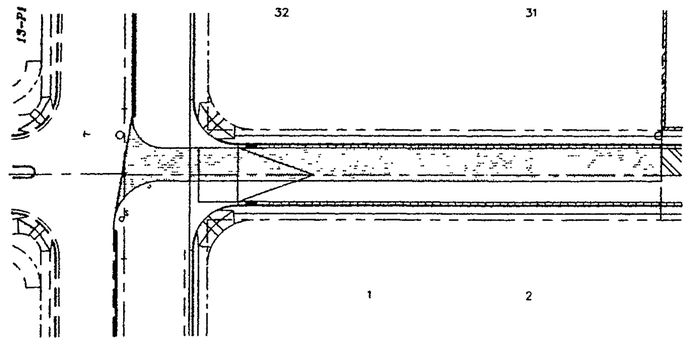

PERIMETER WALL DESIGN PROJECT DATA

NAME: MOUNTAIN RIDGE SUBDIVISION
ZONE ATLAS PAGE: B-19
DRB PROJECT: 1003417
LOCATION: THE NE CORNER OF GLENDALE AVE NE AND WYOMING BOULEVARD NE

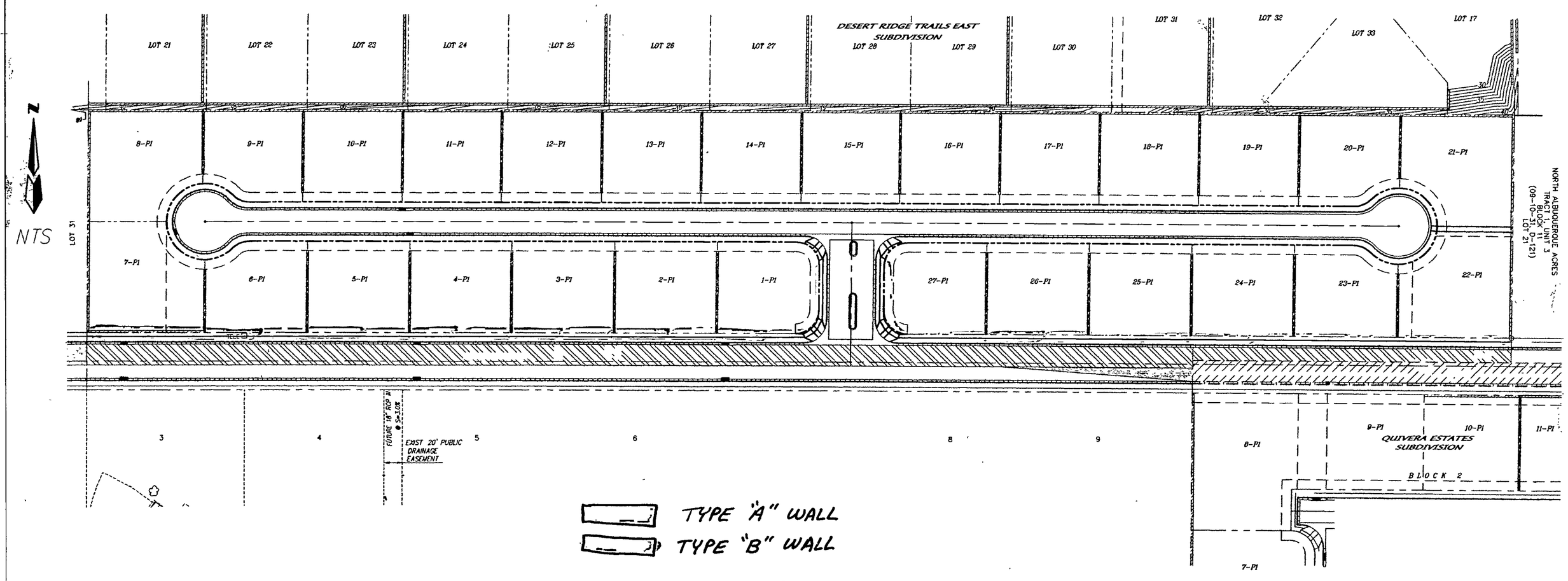

dmg MARK GOODWIN & ASSOCIATES, P.A.
CONSULTING ENGINEERS
P.O. BOX 90606
ALBUQUERQUE, NEW MEXICO 87199
(505) 828-2200, FAX (505) 797-9539

MOUNTAIN RIDGE SUBDIVISION PERIMETER WALL EXHIBIT

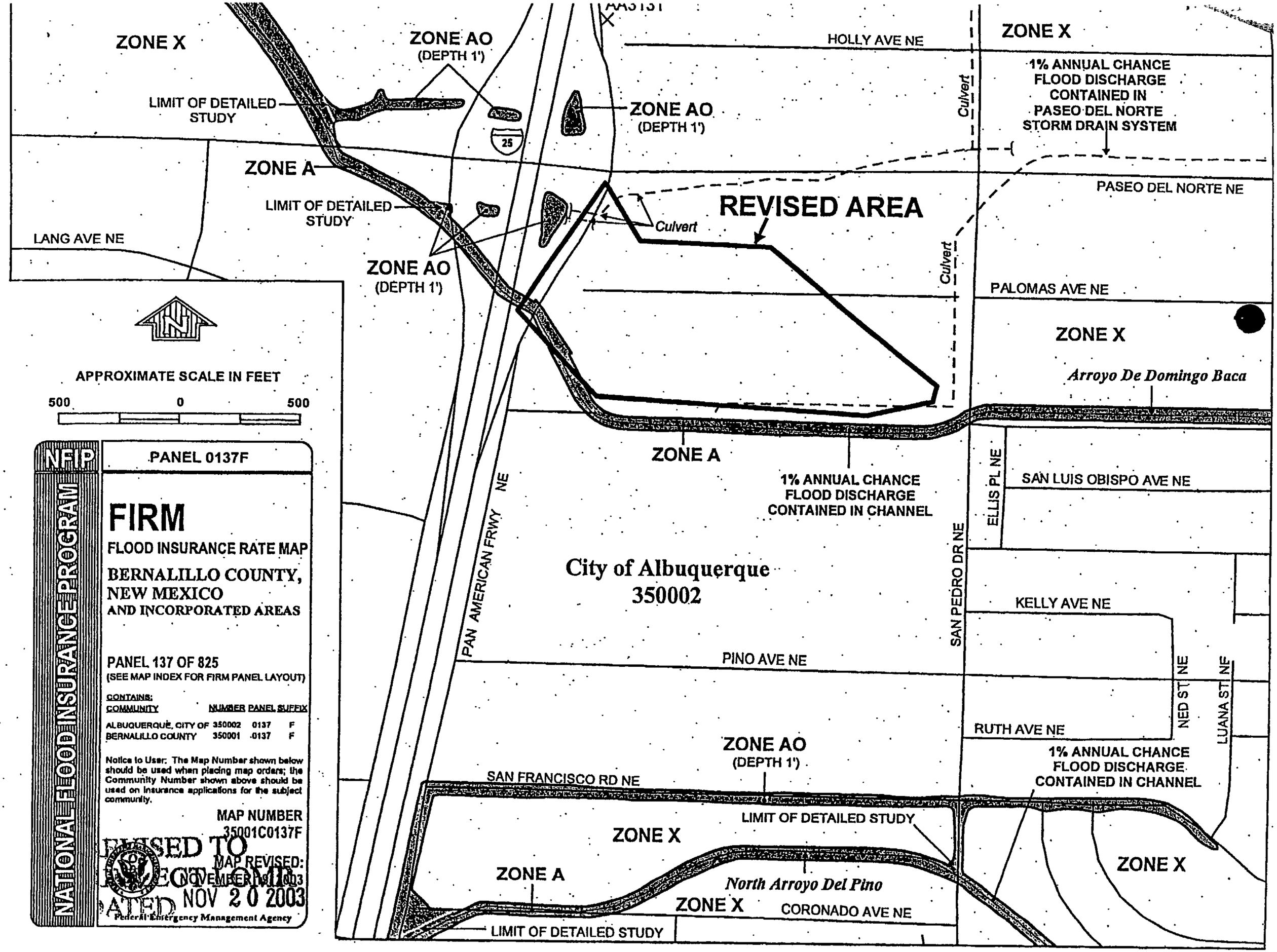
ZONE X
ZONE AO
(DEPTH 1')
LIMIT OF DETAILED STUDY
ZONE A
LIMIT OF DETAILED STUDY
ZONE AO
(DEPTH 1')
ZONE AO
(DEPTH 1')
25
HOLLY AVE NE
ZONE X
1% ANNUAL CHANCE FLOOD DISCHARGE CONTAINED IN PASEO DEL NORTE STORM DRAIN SYSTEM
Culvert
PASEO DEL NORTE NE
REVISED AREA
Culvert
Culvert
LANG AVE NE
PALOMAS AVE NE
ZONE X
Arroyo De Domingo Baca
APPROXIMATE SCALE IN FEET
500 0 500
ZONE A
1% ANNUAL CHANCE FLOOD DISCHARGE CONTAINED IN CHANNEL
ELLIS PL NE
SAN LUIS OBISPO AVE NE
PAN AMERICAN FRWY NE
City of Albuquerque
350002
SAN PEDRO DR NE
KELLY AVE NE
PINO AVE NE
NED ST NE
LUANA ST NE
RUTH AVE NE
ZONE AO
(DEPTH 1')
1% ANNUAL CHANCE FLOOD DISCHARGE CONTAINED IN CHANNEL
SAN FRANCISCO RD NE
LIMIT OF DETAILED STUDY
ZONE X
ZONE A
North Arroyo Del Pino
ZONE X
CORONADO AVE NE
ZONE X
LIMIT OF DETAILED STUDY
NFIP
NATIONAL FLOOD INSURANCE PROGRAM
PANEL 0137F
FIRM
FLOOD INSURANCE RATE MAP
BERNALILLO COUNTY, NEW MEXICO
AND INCORPORATED AREAS
PANEL 137 OF 825
(SEE MAP INDEX FOR FIRM PANEL LAYOUT)
CONTAINS:
COMMUNITY NUMBER PANEL SUFFIX
ALBUQUERQUE, CITY OF 350002 0137 F
BERNALILLO COUNTY 350001 0137 F
Notice to User: The Map Number shown below should be used when placing map orders; the Community Number shown above should be used on insurance applications for the subject community.
MAP NUMBER
35001C0137F
MAP REVISED:
NOVEMBER 20, 2003
REVISED TO REFLECT LOMR EFFECTIVE DATED NOV 20 2003
Federal Emergency Management Agency

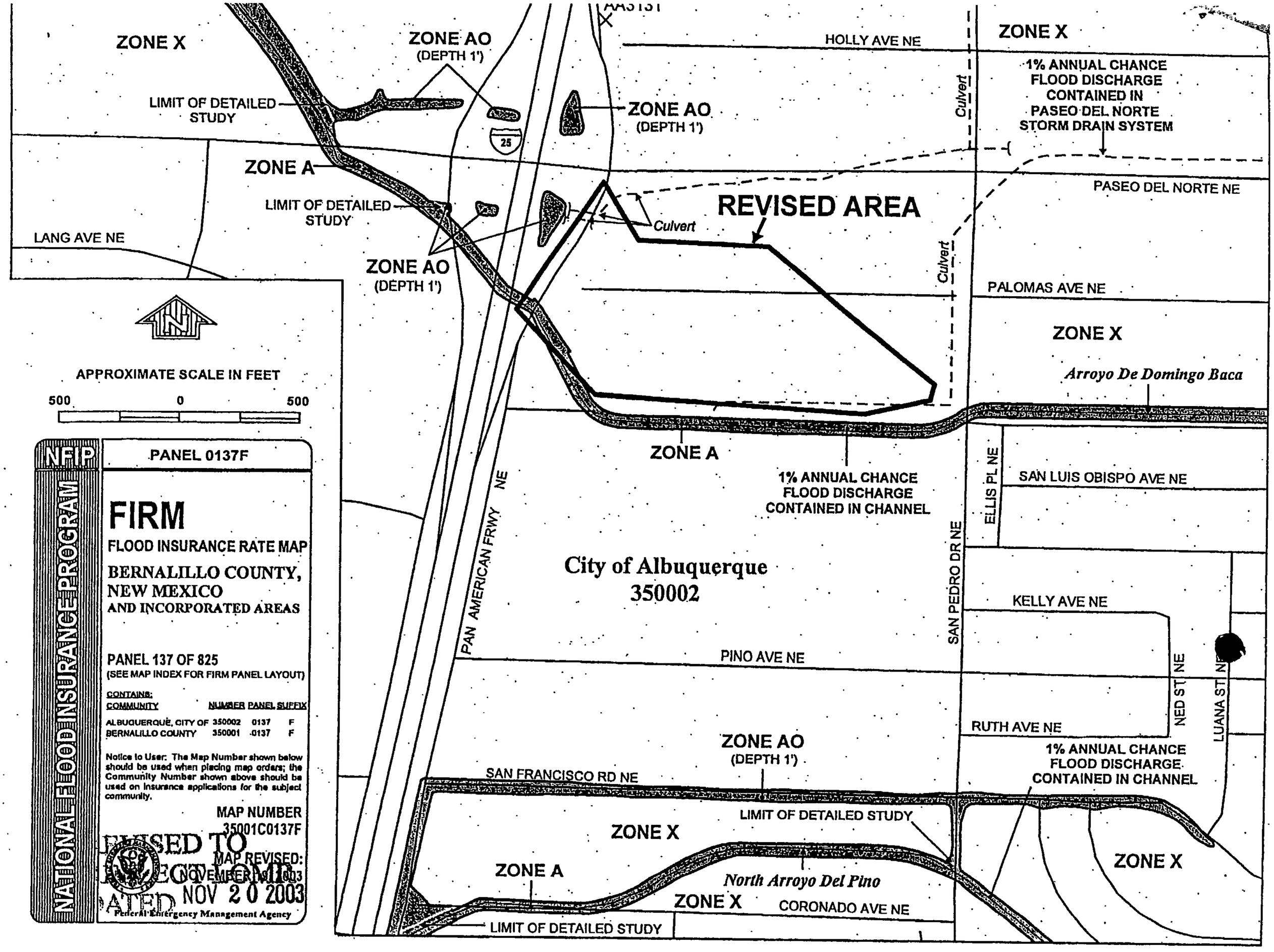
ZONE X
ZONE AO
(DEPTH 1')
LIMIT OF DETAILED STUDY
ZONE A
LIMIT OF DETAILED STUDY
ZONE AO
(DEPTH 1')
LANG AVE NE
ZONE AO
(DEPTH 1')
HOLLY AVE NE
ZONE X
1% ANNUAL CHANCE FLOOD DISCHARGE CONTAINED IN PASEO DEL NORTE STORM DRAIN SYSTEM
Culvert
PASEO DEL NORTE NE
REVISED AREA
Culvert
Culvert
PALOMAS AVE NE
ZONE X
Arroyo De Domingo Baca
ZONE A
1% ANNUAL CHANCE FLOOD DISCHARGE CONTAINED IN CHANNEL
ELLIS PL NE
SAN LUIS OBISPO AVE NE
PAN AMERICAN FRWY NE
City of Albuquerque
350002
SAN PEDRO DR NE
KELLY AVE NE
PINO AVE NE
NED ST NE
LUANA ST NE
RUTH AVE NE
ZONE AO
(DEPTH 1')
1% ANNUAL CHANCE FLOOD DISCHARGE CONTAINED IN CHANNEL
SAN FRANCISCO RD NE
LIMIT OF DETAILED STUDY
ZONE X
ZONE A
North Arroyo Del Pino
ZONE X
CORONADO AVE NE
ZONE X
LIMIT OF DETAILED STUDY
APPROXIMATE SCALE IN FEET
500 0 500
NFIP
NATIONAL FLOOD INSURANCE PROGRAM
PANEL 0137F
FIRM
FLOOD INSURANCE RATE MAP
BERNALILLO COUNTY, NEW MEXICO
AND INCORPORATED AREAS
PANEL 137 OF 825
(SEE MAP INDEX FOR FIRM PANEL LAYOUT)
CONTAINS:
COMMUNITY NUMBER PANEL SUFFIX
ALBUQUERQUE, CITY OF 350002 0137 F
BERNALILLO COUNTY 350001 0137 F
Notice to User: The Map Number shown below should be used when placing map orders; the Community Number shown above should be used on insurance applications for the subject community.
MAP NUMBER
35001C0137F
MAP REVISED:
NOVEMBER 20, 2003
REVISED TO REFLECT LOMR EFFECTIVE DATED NOV 20 2003
Federal Emergency Management Agency

1001946
8/28

Federal Emergency Management Agency

Washington, D.C. 20472

NOV 20 2003

CERTIFIED MAIL
RETURN RECEIPT REQUESTED

The Honorable Martin Chavez
Mayor, City of Albuquerque
P.O. Box 1293
Albuquerque, NM 87103

IN REPLY REFER TO:

Case Number: 04-06-247P
Community Name: City of Albuquerque, Bernalillo County, New Mexico
Community Number: 350002
Effective Date of this Revision: NOV 20 2003

Dear Mayor Chavez:

The Flood Insurance Rate Map (FIRM) for your community has been revised by this Letter of Map Revision (LOMR). Please use the enclosed annotated map panel revised by this LOMR for floodplain management purposes and for all flood insurance policies and renewals issued in your community.

Additional documents are enclosed that provide information regarding this LOMR. Please see the List of Enclosures below to determine which documents are included. Other attachments specific to this request may be included as referenced in the Determination Document. If you have any questions regarding floodplain management regulations for your community or the National Flood Insurance Program (NFIP) in general, please contact the Consultation Coordination Officer (CCO) for your community. If you have any technical questions regarding this LOMR, please contact the Director, Federal Insurance and Mitigation Division of the Federal Emergency Management Agency (FEMA) in Denton, Texas, at (940) 898-5165, or the FEMA Map Assistance Center toll free at 1-877-336-2627 (1-877-FEMA MAP). Additional information about the NFIP is available on our web site at http://www.fema.gov/nfip.

Sincerely,

Kevin C. Long

Kevin C. Long, CFM, Project Engineer
Hazard Identification Section
Mitigation Division
Emergency Preparedness
and Response Directorate

For: Doug Bellomo, P.E., Acting Chief
Hazard Identification Section
Mitigation Division
Emergency Preparedness
and Response Directorate

List of Enclosures:

Letter of Map Revision Determination Document
Annotated Flood Insurance Rate Map
List of Current Flood Insurance Study Data

cc: Carlos A. Montoya, Floodplain Administrator, City of Albuquerque
Craig W. Hoover, P.E., Bohannan-Huston, Inc.
Community Map Repository

Current DRC
Project Number:_____

FIGURE 12

INFRASTRUCTURE LIST

Date Submitted: 06/30/04
Date Site Plan Approved:_____
Date Preliminary Plat Approved:_____
Date Preliminary Plat Expires:_____
DRB Project No.: 1003417
DRB Application No.:_____

ORIGINAL

EXHIBIT "A"
TO SUBDIVISION IMPROVEMENTS AGREEMENT
DEVELOPMENT REVIEW BOARD (D.R.B.) REQUIRED INFRASTRUCTURE LIST

MOUNTAIN RIDGE SUBDIVISION

PROPOSED NAME OF PLAT AND/OR SITE DEVELOPMENT PLAN

Lots 22-30, Tract 1, Block 11, Unit 3, North Albuquerque Acres
EXISTING LEGAL DESCRIPTION PRIOR TO PLATTING ACTION

Following is a summary of PUBLIC/PRIVATE Infrastructure required to be constructed or financially guaranteed for the above development. This Listing is not necessarily a complete listing. During the SIA process and/or in the review of the construction drawings, if the DRC Chair determines that appurtenant items and/or unforeseen items have not been included in the infrastructure listing, the DRC Chair may include those items in the listing and related financial guarantee. Likewise, if the DRC Chair determines that appurtenant or non-essential items can be deleted from the listing, those items may be deleted as well as the related portions of the financial guarantees. All such revisions require approval by the DRC Chair, the User Department and agent/owner. If such approvals are obtained, these revisions to the listing will be incorporated administratively. In addition, any unforeseen items which arise during construction which are necessary to complete the project and which normally are the Subdivider's responsibility will be required as a condition of project acceptance and close out by the City.

SIA Sequence #	COA DRC Project #	Size	Type of Improvement	Location	From	To	Private Inspector	City Inspector	City Cnst Engineer
			PAVING						
		28" FF Private 6'	Res Pvmt C & G (Both Sides) Sidewalk (Both Sides) **(1)**	Niki Lane	East Terminus	West Terminus	/	/	/
		50' FF Private 4'	Res Pvmt C & G (Both Sides) Sidewalk (Both Sides) **(1)**	Ashlynn Lane	Niki Lane	Glendale Ave	/	/	/
		24' F-E 4'	Perm Pvmt C & G (North Side) Sidewalk (North Side)	Glendale Avenue	East Prop Line	West Prop Line	/	/	/
		24' E-E	4" Temp Paving	Glendale Avenue	West Property Line	Wyoming Blvd	/	/	/
			WATER						
		6"	Waterline	Niki Lane	East Terminus	West Terminus	/	/	/
		6"	Waterline	15' WL Easement	Niki Lane	Glendale Ave	/	/	/
		6"	Waterline	40' SAS, SD, WL Esmt	Niki Lane	Glendale Ave	/	/	/
		8"	Waterline **(2)**	Glendale Ave	Wyoming Blvd	Barstow St	/	/	/
		12"	Waterline **(2)**	Barstow St	Glendale Ave	Modesto Ave	/	/	/
			SAS						
		8"	SAS	Niki Lane	East Terminus	West Terminus	/	/	/

A04022

revised 07/01/01

Project name: Mountain Ridge Subdivision

SIA Sequence #	COA DRC Project #	Size	Type of Improvement	Location	From	To	Private Inspector	City Inspector	City Cnst Engineer
		8"	SAS	40' SAS, SD, WL Esmt	Niki Lane	Glendale Ave	/	/	/
		8"	SAS (2)	Glendale Ave	Wyoming Blvd	East Prop Line			
			STORM DRAIN						
		18"	Storm Drain	Niki Lane	Lot 5, Block 1	West Terminus	/	/	/
		24"	Storm Drain	40' SAS, SD, WL Esmt	Niki Lane	Glendale Ave	/	/	/

1 Sidewalks to be deferred
2 Financially Guaranteed w/. COA Project # 729781
3 Water infrastructure to include valves, fittings, valveboxes and fire hydrants.
4 Sanitary sewer to include manholes and service connections.
5 Storm Drain to includes inlets, manholes
6 Grading & Drainage Certification per DPM including Perimeter walls as shown on the Grading Plan for Release of SIA and Financial Guarantees. Financial Guarantee is not required for this item
7 Street lights per DPM

AGENT / OWNER

Gregory J. Krenik, PE
NAME (print)

MARK GOODWIN & ASSOCIATES
FIRM

7-1-04
SIGNATURE - date

MAXIMUM TIME ALLOWED TO CONSTRUCT THE IMPROVEMENTS WITHOUT A DRB EXTENSION: _____

DEVELOPMENT REVIEW BOARD MEMBER APPROVALS

DRB CHAIR - date

PARKS & GENERAL SERVICES - date

TRANSPORTATION DEVELOPMENT - date

AMAFCA - date

UTILITY DEVELOPMENT - date

_____ - date

CITY ENGINEER - date

_____ - date

DESIGN REVIEW COMMITTEE REVISIONS

REVISION	DATE	DRC CHAIR	USER DEPARTMENT	AGENT /OWNER

A04022

revised 07/01/01

RIO GRANDE ENGINEERING

(505) 321-9099
3500 Comanche NE, Suite E-5 Albuquerque, NM 87107

LETTER OF TRANSMITTAL

DATE: 8/2/804	JOB NO: 2448
ATTENTION: Sharon	
RE: Project # 1003585	

TO Sheran Matson
Chair
Development Review Board
Plaza del Sol

WE ARE SENDING YOU ☐ Attached ☐ Under Separate cover via _____ the following items:

☐ Shop drawings ☐ Prints ☐ Plans ☐ Samples ☐ Specifications

☐ Copy of letter ☐ Change order ☐

COPIES	DATED	NO.	DESCRIPTION
5			Existing Structure Exhibit (ALTA Survey)

THESE ARE TRANSMITTED as checked below:

☒ For approval ☐ Approved as submitted ☐ **FOR SIGNATURE(S)**

☒ For your use ☐ Approved as noted ☐

☐ As requested ☐ Returned for corrections

☐ For review and comments ☐

☐ FOR BIDS DUE _____ 19 ____ ☐ PRINTS RETURNED AFTER LOAN TO US

REMARKS Please find the attached documents you requested. Please contact me should you have any questions.

COPY TO

RECEIVED BY SIGNED David Soule

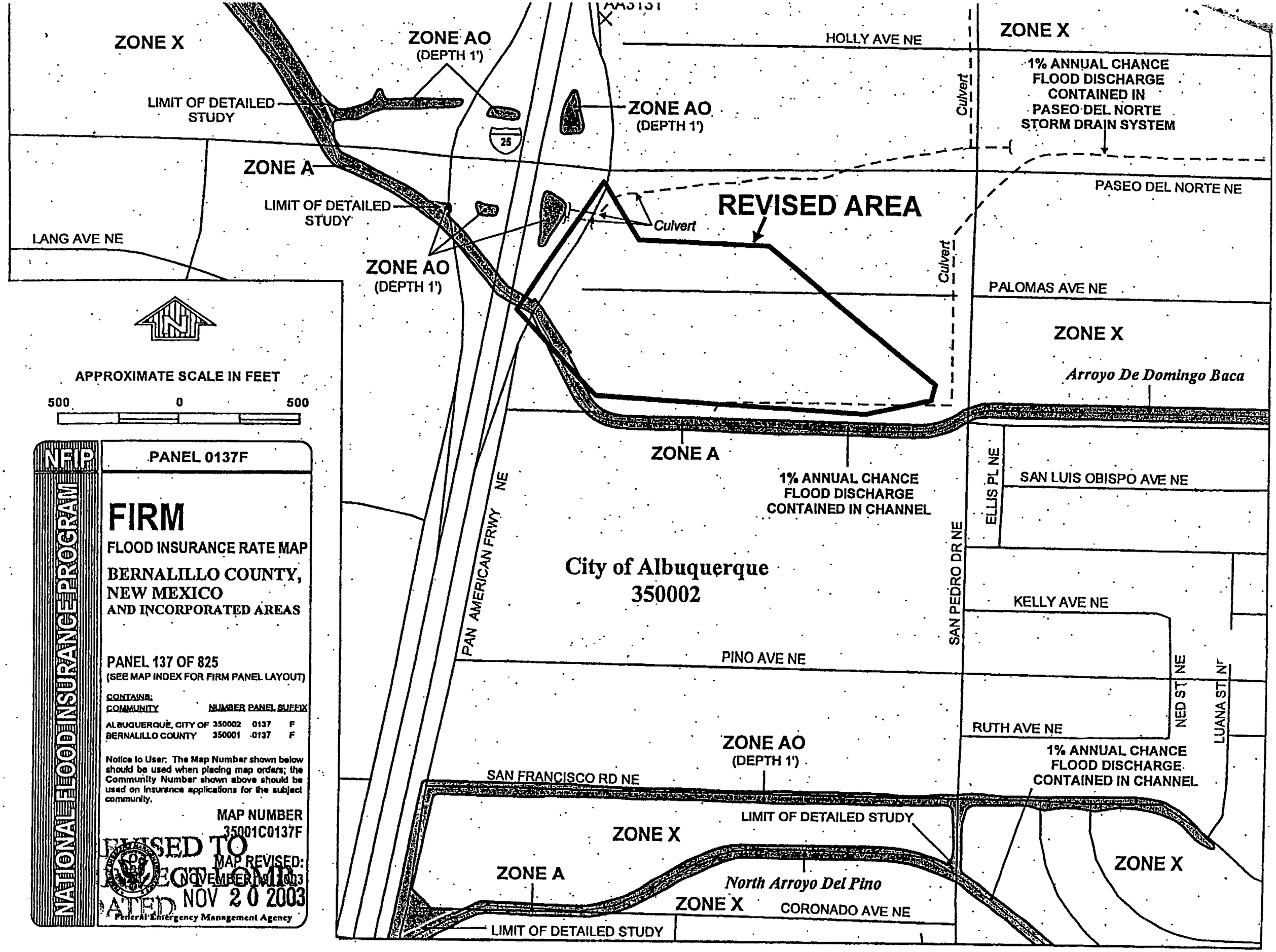
ZONE X
ZONE AO
(DEPTH 1')
LIMIT OF DETAILED STUDY
ZONE A
LIMIT OF DETAILED STUDY
ZONE AO
(DEPTH 1')
LANG AVE NE
ZONE AO
(DEPTH 1')
HOLLY AVE NE
ZONE X
1% ANNUAL CHANCE FLOOD DISCHARGE CONTAINED IN PASEO DEL NORTE STORM DRAIN SYSTEM
Culvert
PASEO DEL NORTE NE
REVISED AREA
Culvert
Culvert
PALOMAS AVE NE
ZONE X
Arroyo De Domingo Baca
ZONE A
1% ANNUAL CHANCE FLOOD DISCHARGE CONTAINED IN CHANNEL
ELLIS PL NE
SAN LUIS OBISPO AVE NE
PAN AMERICAN FRWY NE
City of Albuquerque
350002
SAN PEDRO DR NE
KELLY AVE NE
PINO AVE NE
NED ST NE
LUANA ST NE
RUTH AVE NE
ZONE AO
(DEPTH 1')
1% ANNUAL CHANCE FLOOD DISCHARGE CONTAINED IN CHANNEL
SAN FRANCISCO RD NE
LIMIT OF DETAILED STUDY
ZONE X
ZONE A
North Arroyo Del Pino
ZONE X
CORONADO AVE NE
LIMIT OF DETAILED STUDY
ZONE X
APPROXIMATE SCALE IN FEET
500 0 500
NFIP
PANEL 0137F
NATIONAL FLOOD INSURANCE PROGRAM
FIRM
FLOOD INSURANCE RATE MAP
BERNALILLO COUNTY, NEW MEXICO
AND INCORPORATED AREAS
PANEL 137 OF 825
(SEE MAP INDEX FOR FIRM PANEL LAYOUT)
CONTAINS:
COMMUNITY NUMBER PANEL SUFFIX
ALBUQUERQUE, CITY OF 350002 0137 F
BERNALILLO COUNTY 350001 0137 F
Notice to User: The Map Number shown below should be used when placing map orders; the Community Number shown above should be used on insurance applications for the subject community.
MAP NUMBER
35001C0137F
MAP REVISED:
NOVEMBER 19, 2003
REVISED TO REFLECT LOMR EFFECTIVE DATED NOV 20 2003
Federal Emergency Management Agency

Federal Emergency Management Agency

Washington, D.C. 20472

NOV 20 2003

CERTIFIED MAIL
RETURN RECEIPT REQUESTED

The Honorable Martin Chavez
Mayor, City of Albuquerque
P.O. Box 1293
Albuquerque, NM 87103

IN REPLY REFER TO:

Case Number: **04-06-247P**
Community Name: City of Albuquerque, Bernalillo County, New Mexico
Community Number: 350002
Effective Date of this Revision: NOV 20 2003

Dear Mayor Chavez:

The Flood Insurance Rate Map (FIRM) for your community has been revised by this Letter of Map Revision (LOMR). Please use the enclosed annotated map panel revised by this LOMR for floodplain management purposes and for all flood insurance policies and renewals issued in your community.

Additional documents are enclosed that provide information regarding this LOMR. Please see the List of Enclosures below to determine which documents are included. Other attachments specific to this request may be included as referenced in the Determination Document. If you have any questions regarding floodplain management regulations for your community or the National Flood Insurance Program (NFIP) in general, please contact the Consultation Coordination Officer (CCO) for your community. If you have any technical questions regarding this LOMR, please contact the Director, Federal Insurance and Mitigation Division of the Federal Emergency Management Agency (FEMA) in Denton, Texas, at (940) 898-5165, or the FEMA Map Assistance Center toll free at 1-877-336-2627 (1-877-FEMA MAP). Additional information about the NFIP is available on our web site at http://www.fema.gov/nfip.

Sincerely,

Kevin C. Long

Kevin C. Long, CFM, Project Engineer
Hazard Identification Section
Mitigation Division
Emergency Preparedness
and Response Directorate

For: Doug Bellomo, P.E., Acting Chief
Hazard Identification Section
Mitigation Division
Emergency Preparedness
and Response Directorate

List of Enclosures:

Letter of Map Revision Determination Document
Annotated Flood Insurance Rate Map
List of Current Flood Insurance Study Data

cc: Carlos A. Montoya, Floodplain Administrator, City of Albuquerque
Craig W. Hoover, P.E., Bohannan-Huston, Inc.
Community Map Repository

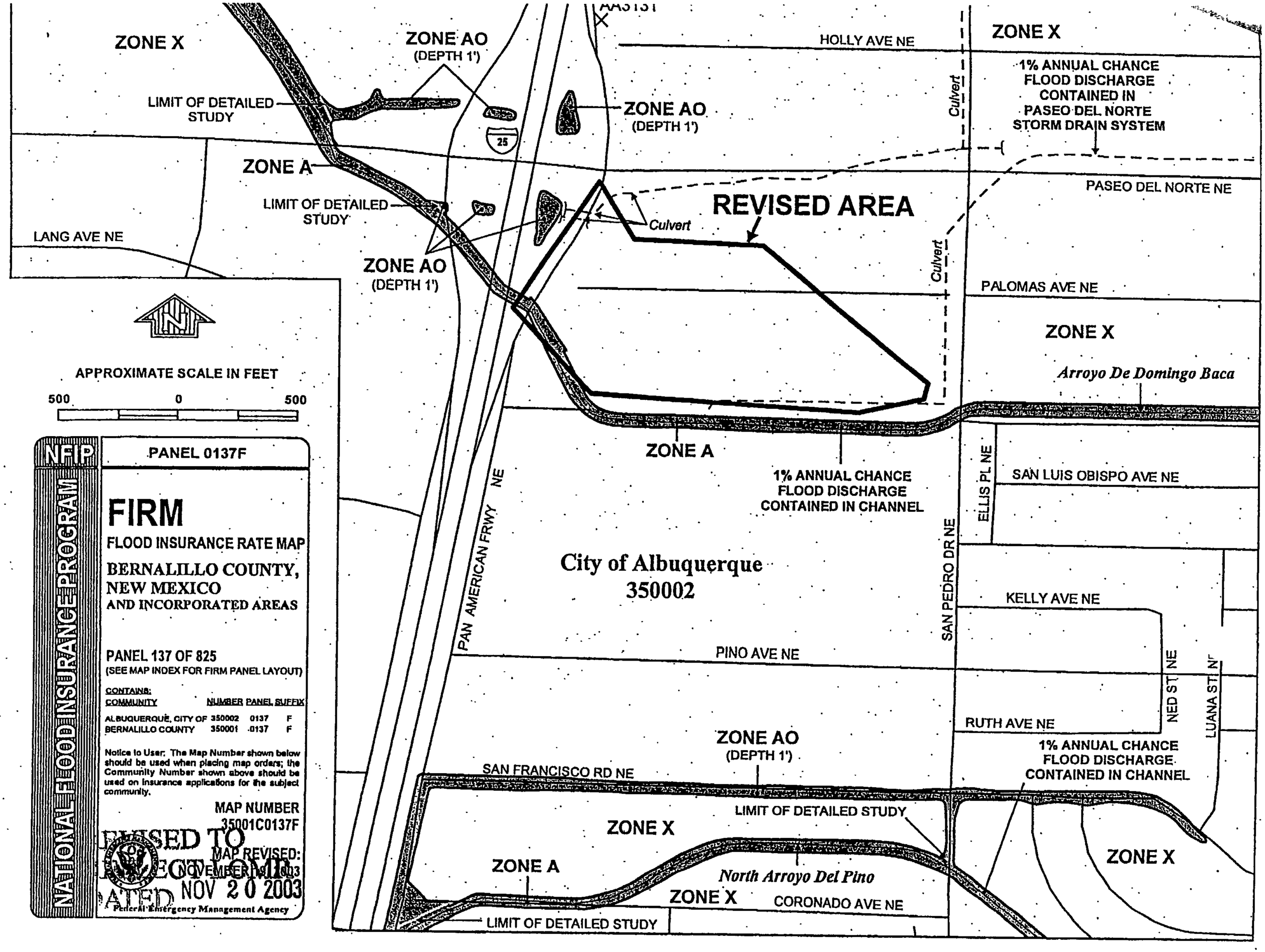
ZONE X
ZONE AO
(DEPTH 1')
LIMIT OF DETAILED STUDY
ZONE A
LIMIT OF DETAILED STUDY
ZONE AO
(DEPTH 1')
LANG AVE NE
HOLLY AVE NE
ZONE AO
(DEPTH 1')
25
ZONE X
1% ANNUAL CHANCE FLOOD DISCHARGE CONTAINED IN PASEO DEL NORTE STORM DRAIN SYSTEM
Culvert
PASEO DEL NORTE NE
REVISED AREA
Culvert
Culvert
PALOMAS AVE NE
ZONE X
Arroyo De Domingo Baca
ZONE A
1% ANNUAL CHANCE FLOOD DISCHARGE CONTAINED IN CHANNEL
ELLIS PL NE
SAN LUIS OBISPO AVE NE
PAN AMERICAN FRWY NE
City of Albuquerque
350002
SAN PEDRO DR NE
KELLY AVE NE
PINO AVE NE
NED ST NE
LUANA ST NE
RUTH AVE NE
ZONE AO
(DEPTH 1')
1% ANNUAL CHANCE FLOOD DISCHARGE CONTAINED IN CHANNEL
SAN FRANCISCO RD NE
LIMIT OF DETAILED STUDY
ZONE X
ZONE A
North Arroyo Del Pino
ZONE X
CORONADO AVE NE
LIMIT OF DETAILED STUDY
ZONE X
N
APPROXIMATE SCALE IN FEET
500 0 500
NFIP
PANEL 0137F
NATIONAL FLOOD INSURANCE PROGRAM
FIRM
FLOOD INSURANCE RATE MAP
BERNALILLO COUNTY, NEW MEXICO
AND INCORPORATED AREAS
PANEL 137 OF 825
(SEE MAP INDEX FOR FIRM PANEL LAYOUT)
CONTAINS:
COMMUNITY NUMBER PANEL SUFFIX
ALBUQUERQUE, CITY OF 350002 0137 F
BERNALILLO COUNTY 350001 0137 F
Notice to User: The Map Number shown below should be used when placing map orders; the Community Number shown above should be used on insurance applications for the subject community.
MAP NUMBER
35001C0137F
MAP REVISED:
NOVEMBER 19, 2003
REVISED TO REFLECT LOMR
EFFECTIVE DATE
NOV 20 2003
Federal Emergency Management Agency

Federal Emergency Management Agency

Washington, D.C. 20472

NOV 20 2003

CERTIFIED MAIL
RETURN RECEIPT REQUESTED

The Honorable Martin Chavez
Mayor, City of Albuquerque
P.O. Box 1293
Albuquerque, NM 87103

IN REPLY REFER TO:

Case Number: 04-06-247P
Community Name: City of Albuquerque, Bernalillo County, New Mexico
Community Number: 350002
Effective Date of this Revision: NOV 20 2003

Dear Mayor Chavez:

The Flood Insurance Rate Map (FIRM) for your community has been revised by this Letter of Map Revision (LOMR). Please use the enclosed annotated map panel revised by this LOMR for floodplain management purposes and for all flood insurance policies and renewals issued in your community.

Additional documents are enclosed that provide information regarding this LOMR. Please see the List of Enclosures below to determine which documents are included. Other attachments specific to this request may be included as referenced in the Determination Document. If you have any questions regarding floodplain management regulations for your community or the National Flood Insurance Program (NFIP) in general, please contact the Consultation Coordination Officer (CCO) for your community. If you have any technical questions regarding this LOMR, please contact the Director, Federal Insurance and Mitigation Division of the Federal Emergency Management Agency (FEMA) in Denton, Texas, at (940) 898-5165, or the FEMA Map Assistance Center toll free at 1-877-336-2627 (1-877-FEMA MAP). Additional information about the NFIP is available on our web site at http://www.fema.gov/nfip.

Sincerely,

Kevin C. Long

Kevin C. Long, CFM, Project Engineer
Hazard Identification Section
Mitigation Division
Emergency Preparedness
and Response Directorate

For: Doug Bellomo, P.E., Acting Chief
Hazard Identification Section
Mitigation Division
Emergency Preparedness
and Response Directorate

List of Enclosures:

Letter of Map Revision Determination Document
Annotated Flood Insurance Rate Map
List of Current Flood Insurance Study Data

cc: Carlos A. Montoya, Floodplain Administrator, City of Albuquerque
Craig W. Hoover, P.E., Bohannan-Huston, Inc.
Community Map Repository

Federal Emergency Management Agency

Washington, D.C. 20472

NOV 20 2003

CERTIFIED MAIL
RETURN RECEIPT REQUESTED

The Honorable Martin Chavez
Mayor, City of Albuquerque
P.O. Box 1293
Albuquerque, NM 87103

IN REPLY REFER TO:

Case Number: **04-06-247P**
Community Name: City of Albuquerque, Bernalillo County, New Mexico
Community Number: 350002
Effective Date of this Revision: NOV 20 2003

Dear Mayor Chavez:

The Flood Insurance Rate Map (FIRM) for your community has been revised by this Letter of Map Revision (LOMR). Please use the enclosed annotated map panel revised by this LOMR for floodplain management purposes and for all flood insurance policies and renewals issued in your community.

Additional documents are enclosed that provide information regarding this LOMR. Please see the List of Enclosures below to determine which documents are included. Other attachments specific to this request may be included as referenced in the Determination Document. If you have any questions regarding floodplain management regulations for your community or the National Flood Insurance Program (NFIP) in general, please contact the Consultation Coordination Officer (CCO) for your community. If you have any technical questions regarding this LOMR, please contact the Director, Federal Insurance and Mitigation Division of the Federal Emergency Management Agency (FEMA) in Denton, Texas, at (940) 898-5165, or the FEMA Map Assistance Center toll free at 1-877-336-2627 (1-877-FEMA MAP). Additional information about the NFIP is available on our web site at http://www.fema.gov/nfip.

Sincerely,

Kevin C. Long

Kevin C. Long, CFM, Project Engineer
Hazard Identification Section
Mitigation Division
Emergency Preparedness
and Response Directorate

For: Doug Bellomo, P.E., Acting Chief
Hazard Identification Section
Mitigation Division
Emergency Preparedness
and Response Directorate

List of Enclosures:

Letter of Map Revision Determination Document
Annotated Flood Insurance Rate Map
List of Current Flood Insurance Study Data

cc: Carlos A. Montoya, Floodplain Administrator, City of Albuquerque
Craig W. Hoover, P.E., Bohannan-Huston, Inc.
Community Map Repository

City of Albuquerque

DEVELOPMENT/ PLAN REVIEW APPLICATION

Supplemental form

SUBDIVISION **S**

X Major Subdivision action
✓ Minor Subdivision action
___ Vacation **V**
___ Variance (Non-Zoning)

SITE DEVELOPMENT PLAN **P**

___ ...for Subdivision Purposes
___ ...for Building Permit
___ IP Master Development Plan
___ Cert. of Appropriateness (LUCC) **L**

Supplemental form

ZONING & PLANNING **Z**

___ Annexation
___ County Submittal
___ EPC Submittal
___ Zone Map Amendment (Establish or Change Zoning)
___ Sector Plan (Phase I, II, III)
___ Amendment to Sector, Area, Facility or Comprehensive Plan
___ Text Amendment (Zoning Code/Sub Regs)

APPEAL / PROTEST of... **A**

___ Decision by: DRB, EPC, LUCC, Planning Director or Staff, ZHE, Zoning Board of Appeals

PRINT OR TYPE IN BLACK INK ONLY. The applicant or agent must submit the completed application in person to the Planning Department Development Services Center, 600 2nd Street NW, Albuquerque, NM 87102. Fees must be paid at the time of application. Refer to supplemental forms for submittal requirements.

APPLICANT INFORMATION:

NAME: Alpha Equities, LLC PHONE: 922-9411
ADDRESS: PO Box 10005 FAX: 922-9418
CITY: Albuquerque STATE NM ZIP 87184 E-MAIL:
Proprietary interest in site: Owner **List all owners:**
AGENT (if any): Mark Goodwin & Associates, PA PHONE: 828-2200
ADDRESS: PO Box 90606 FAX: 797-9539
CITY: Albuquerque STATE NM ZIP 87199 E-MAIL:goodwinengrs@comcast.net

DESCRIPTION OF REQUEST: Major Subdivision Application for Sketch Plat Approval

Is the applicant seeking incentives pursuant to the Family Housing Development Program? ___ Yes. X No.

SITE INFORMATION: ACCURACY OF THE LEGAL DESCRIPTION IS CRUCIAL! ATTACH A SEPARATE SHEET IF NECESSARY.

Lot or Tract No. Lots 22-30, Tract 1 Block: 11 Unit: 3
Subdiv. / Addn. North Albuquerque Acres
Current Zoning: R-D3 D/UA Proposed zoning: Same
Zone Atlas page(s): B-19 No. of **existing** lots: 9 No. of **proposed** lots: 27
Total area of site (acres): 7.9722 Density if applicable: dwellings per gross acre: _____ dwellings per net acre: _____
Within city limits? X Yes. No___, but site is within 5 miles of the city limits.) Within 1000FT of a landfill? No
UPC No. 101906544006940211, 101906542406940210, 101906540706940209, 101906538906940208, 101906537306940207, 101906535606940206, 101906534006840205, 101906532406840204, 101906530706840203 MRGCD Map No._____
LOCATION OF PROPERTY BY STREETS: On or Near: Glendale Avenue NE
Between: Wyoming Boulevard NE and Barstow Street NE

CASE HISTORY:

List **any** current or prior case number that may be relevant to your application (Proj., App., DRB-, AX_,Z_, V_, S_, etc.): NA

Check-off if project was previously reviewed by Sketch Plat/Plan ☐, or Pre-application Review Team ☐. Date of review:

SIGNATURE _____ DATE 5-4-04
(Print) Gregory J. Krenik, PE ___ Applicant X Agent

FOR OFFICIAL USE ONLY Form revised 9/01, 3/03, 7/03, 10/03, **3/04**

☐ ~~INTERNAL~~ ROUTING
☑ All checklists are complete
☑ All fees have been collected
☑ All case #s are assigned
☑ AGIS copy has been sent
☑ Case history #s are listed
☑ Site is within 1000ft of a landfill
☐ ~~F.H.D.P.~~ density bonus
☐ ~~F.H.D.P.~~ fee rebate

Application case numbers	Action	S.F.	Fees
04DRB - - 00671	Sketch	S(3)	$ Ø
- -			$
- -			$
- -			$
- -			$
			Total $ Ø

Hearing date MAY 12TH 04

Planner signature / date 5/4/04

Project # 1003417

FORM S(3): SUBDIVISION - D.R.B. MEETING (UNADVERTISED) OR INTERNAL ROUTING

☒ **SKETCH PLAT REVIEW AND COMMENT** **YOUR ATTENDANCE IS REQUIRED.**

✓ Scale drawing of the proposed subdivision plat (folded to fit into an 8.5" by 14" pocket) **6** copies for unadvertised meetings. Sketches are not reviewed through internal routing.

VACANT ✓ Site sketch with measurements showing structures, parking, Bldg. setbacks, adjacent rights-of-way and street improvements, etcetera, if there is any existing land use (folded to fit into an 8.5" by 14" pocket) **6** copies.

✓ Zone Atlas map with the entire property(ies) precisely and clearly outlined and crosshatched (to be photocopied)

✓ Letter briefly describing, explaining, and justifying the request

✓ Any original and/or related file numbers are listed on the cover application

☐ **MAJOR SUBDIVISION EXTENSION OF PRELIMINARY PLAT** **Your attendance is required.**

__ Preliminary Plat reduced to 8.5" x 11"
__ Zone Atlas map with the entire property(ies) precisely and clearly outlined and crosshatched (to be photocopied)
__ Letter briefly describing, explaining, and justifying the request
__ Copy of previous D.R.B. approved infrastructure list
__ Copy of the LATEST Official D.R.B. Notice of approval for Preliminary Plat Extension request
__ Any original and/or related file numbers are listed on the cover application

Extensions are not reviewed through internal routing.

Extension of preliminary plat approval expires after one year.

☐ **MAJOR SUBDIVISION FINAL PLAT APPROVAL** **Your attendance is required.**

__ Proposed Final Plat (folded to fit into an 8.5" by 14" pocket) **6** copies for unadvertised meetings, **4** copies for internal routing.
__ Design elevations & cross sections of perimeter walls
__ Zone Atlas map with the entire property(ies) precisely and clearly outlined and crosshatched (to be photocopied)
__ Original Mylar drawing of the proposed plat for internal routing only. Otherwise, bring Mylar to meeting.
__ Property owner's and City Surveyor's signatures on the Mylar drawing
__ SIA financial guaranty verification
__ Landfill disclosure and EHD signature line on the Mylar drawing if property is within a landfill buffer
__ Any original and/or related file numbers are listed on the cover application
__ **DXF FILE AND HARD COPY OF FINAL PLAT DATA FOR AGIS IS REQUIRED.**

☐ **MINOR SUBDIVISION PRELIMINARY / FINAL PLAT APPROVAL** **Your attendance is required.**

__ Proposed Preliminary / Final Plat (folded to fit into an 8.5" by 14" pocket) **6** copies for unadvertised meetings, **4** copies for internal routing.
__ Site sketch with measurements showing structures, parking, Bldg. setbacks, adjacent rights-of-way and street improvements, etcetera, if there is any existing land use (folded to fit into an 8.5" by 14" pocket) **6** copies.
__ Zone Atlas map with the entire property(ies) precisely and clearly outlined and crosshatched (to be photocopied)
__ Letter briefly describing, explaining, and justifying the request
__ Original Mylar drawing of the proposed plat for internal routing only. Otherwise, bring Mylar to meeting.
__ Property owner's and City Surveyor's signatures on the Mylar drawing
__ Landfill disclosure and EHD signature line on the Mylar drawing if property is within a landfill buffer
__ Fee (see schedule)
__ Any original and/or related file numbers are listed on the cover application
__ Infrastructure list if required **(verify with DRB Engineer)** **NO INTERNAL ROUTING**
__ **DXF FILE AND HARD COPY OF FINAL PLAT DATA FOR AGIS IS REQUIRED.**

☐ **AMENDMENT TO PRELIMINARY PLAT (with minor changes)** **Your attendance is required.**
☐ **AMENDMENT TO INFRASTRUCTURE LIST (with minor changes)**
☐ **AMENDMENT TO GRADING PLAN (with minor changes)**

PLEASE NOTE: There are no clear distinctions between significant and minor changes with regard to subdivision amendments. Significant changes are those deemed by the DRB to require public notice and public hearing.

__ Proposed Amended Preliminary Plat, Infrastructure List, and/or Grading Plan (folded to fit into an 8.5" by 14" pocket) **6** copies for unadvertised meetings.
__ Original Preliminary Plat, Infrastructure List, and/or Grading Plan (folded to fit into an 8.5" by 14" pocket) **6** copies for unadvertised meetings
__ Zone Atlas map with the entire property(ies) precisely and clearly outlined and crosshatched (to be photocopied)
__ Letter briefly describing, explaining, and justifying the request
__ Original Mylar drawing of the proposed amended plat for internal routing only. Otherwise, bring Mylar to meeting.
__ Property owner's and City Surveyor's signatures on the Mylar drawing, if the plat is being amended
__ Any original and/or related file numbers are listed on the cover application

Amended preliminary plat approval expires after one year.

I, the applicant, acknowledge that any information required but not submitted with this application will likely result in deferral of actions.

GREGORY J. KRENIK, PE
Applicant name (print)

5-4-04
Applicant signature / date

Form revised 3/03, 8/03 and **11/03**

☑ Checklists complete
☑ Fees collected
☑ Case #s assigned
☑ Related #s listed

Application case numbers
04DRB - ____ - 00671
____ - ____ - ____
____ - ____ - ____

5/4/04
Planner signature / date

Project # 1003417

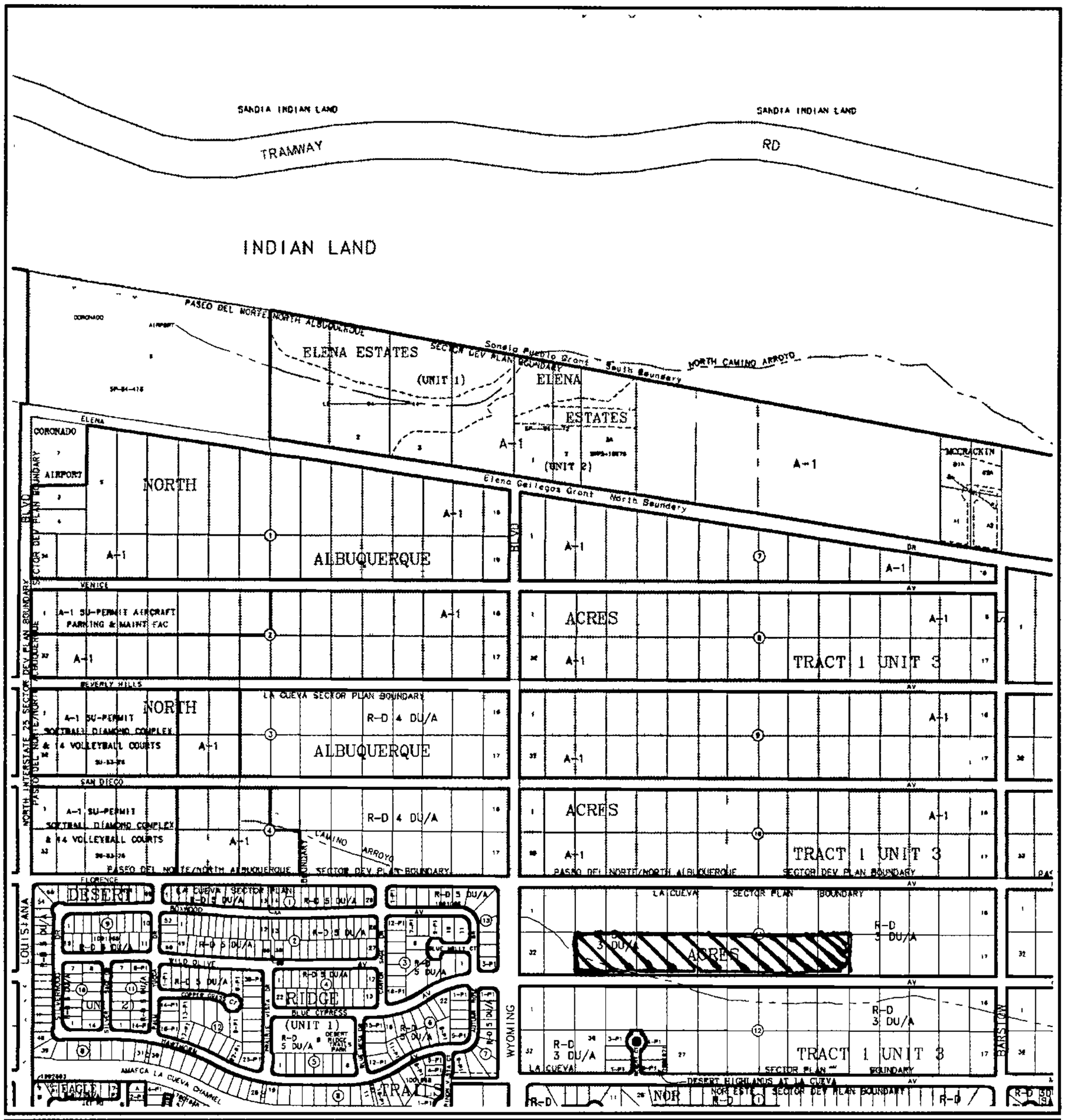

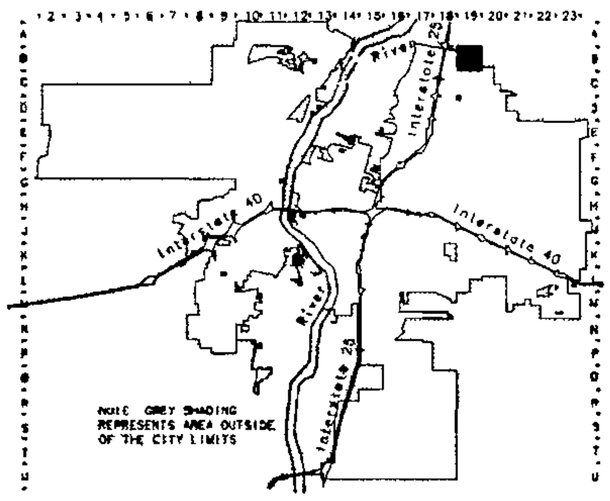

CITY OF ALBUQUERQUE · NEW MEXICO · 1706

Albuquerque Geographic Information System
PLANNING DEPARTMENT

© Copyright 2003

GRAPHIC SCALE IN FEET

250 0 750 1000

Zone Atlas Page

B-19-Z

Map Amended through November 01, 2003

D. Mark Gooa. ..ı & Associates, P.A.
Consulting Engineers
P.O. BOX 90606, ALBUQUERQUE,NM 87199
(505) 828-2200 FAX 797-9539
e-mail: goodwinengrs@comcast.net

April 30, 2004

Ms. Sheran Matson
DRB Chair
City of Albuquerque
P.O. Box 1293
Albuquerque, NM 87103

Re: Quivera Estates, Unit 2

Dear Ms. Matson:

The owner of the above referenced project wishes to subdivide 9 North Albuquerque Acres lots into 27 Single Family Home lots. The property is zoned RD-3 DU/A and will be developed in accordance with provisions contained in the La Queva Sector Plan. Streets (public) and public utilities will be built to City of Albuquerque standards per DPM. Drainage will be collected in public storm drains and conveyed west down Glendale Avenue.

Please feel free to call me if you have any questions.

Sincerely,

MARK GOODWIN & ASSOCIATES, PA

Gregory J. Krenik, PE
Vice President

GJK/bg

f:\a04022-quivera 2\sketch plat drb letter