#6

COMPLETED 01/23/07 SH

DRB CASE ACTION LOG (FINAL PLAT)

REVISED 9/28/05

This sheet must accompany your plat or site plan to obtain delegated signatures. Return sheet with site plan/plat once comments are addressed.

DRB Application No.: **07DRB-00002 (FP)** Project # **1003429**

Project Name: **SIERRA RANCH SUBDIVISION**

Agent: Bohannan Huston Inc. Phone No: 823-1000

Your request for (**SDP for SUB), (SDP for BP), (FINAL PLATS), (MASTER DEVELOP. PLAN),** was approved on 1/10/07 by the DRB with delegation of signature(s) to the following departments.

OUTSTANDING SIGNATURES COMMENTS TO BE ADDRESSED

- ☐ TRANSPORTATION:
- ☐
- ☐
- ☐
- ☐
- ☐

- ☐ UTILITIES:
- ☐
- ☐
- ☐
- ☐

- ☐ CITY ENGINEER / AMAFCA:
- ☐
- ☐
- ☐
- ☐

- ☑ PARKS / CIP: open space note OK
- ☐
- ☐
- ☐
- ☐

- ☑ PLANNING (Last to sign): APS language OK
- ☑ Record OK
- ☐
- ☐
- ☐

- ☒ **Planning must record this plat. Please submit the following items:**
  - -The original plat and a mylar copy for the County Clerk.
  - -Tax certificate from the County Treasurer.
  - -Recording fee (checks payable to the County Clerk). RECORDED DATE: _____
  - -Tax printout from the County Assessor.
- ☐ **3 copies of the approved site plan. Include all pages.**
- ☐ **County Treasurer's signature must be obtained prior to the recording of the plat with the County Clerk.**
- ☐ **Property Management's signature must be obtained prior to Planning Department's signature.**
- ☐ **AGIS DXF File approval required.**
- ☐ **Copy of recorded plat for Planning.**

UPC-100805433741210104

27.00$ recording plat

13.00$ APS document

Project Number 1003429

#6

DRB CASE ACTION LOG (FINAL PLAT)

REVISED 9/28/05

This sheet must accompany your plat or site plan to obtain delegated signatures. Return sheet with site plan/plat once comments are addressed.

DRB Application No.: **07DRB-00002 (FP)** Project # **1003429**

Project Name: **SIERRA RANCH SUBDIVISION**

Agent: Bohannan Huston Inc. Phone No: 823-1000

Your request for (**SDP for SUB), (SDP for BP), (FINAL PLATS), (MASTER DEVELOP. PLAN**), was approved on 1/10/07 by the DRB with delegation of signature(s) to the following departments.

OUTSTANDING SIGNATURES COMMENTS TO BE ADDRESSED

- ☐ TRANSPORTATION:
- ☐
- ☐
- ☐
- ☐
- ☐ UTILITIES:
- ☐
- ☐
- ☐
- ☐ CITY ENGINEER / AMAFCA:
- ☐
- ☐
- ☐
- ☑ PARKS / CIP: open space note
- ☐
- ☐
- ☐
- ☑ PLANNING (Last to sign): APS language for record
- ☑
- ☐
- ☐

Planning must record this plat. Please submit the following items:

-The original plat and a mylar copy for the County Clerk.
-Tax certificate from the County Treasurer.
-Recording fee (checks payable to the County Clerk). RECORDED DATE: _____
-Tax printout from the County Assessor.

- ☐ **3 copies of the approved site plan. Include all pages.**
- ☐ **County Treasurer's signature must be obtained prior to the recording of the plat with the County Clerk.**
- ☐ **Property Management's signature must be obtained prior to Planning Department's signature.**
- ☐ **AGIS DXF File approval required.**
- ☐ **Copy of recorded plat for Planning.**

Project Number 1003429

DEVELOPMENT REVIEW BOARD
ACTION SHEET
Plaza del Sol Hearing Room, Basement, Plaza del Sol Building

January 10, 2007 9:00 a.m.

MEMBERS:

Sheran Matson, AICP, DRB Chair
Claire Senova, Administrative Assistant

Wilfred Gallegos, Transportation Development
Brad Bingham, Alternate City Engineer

Roger Green, Utility Development
Christina Sandoval, Parks & Recreation

****

NOTE: UNLESS ANNOUNCED DURING THE MEETING, THE DEVELOPMENT REVIEW BOARD WILL NOT TAKE A LUNCH BREAK.

NOTE: INDIVIDUALS WITH DISABILITIES WHO NEED SPECIAL ASSISTANCE TO PARTICIPATE AT THIS MEETING SHOULD CONTACT CLAIRE SENOVA, PLANNING DEPARTMENT, AT 924-3946. HEARING IMPAIRED USERS MAY CONTACT HER VIA THE NEW MEXICO RELAY NETWORK BY CALLING TOLL-FREE:1-800-659-8331.

NOTE: REQUESTS FOR DEFERRAL OF CASES WILL BE DISCUSSED BY THE BOARD AND THE APPLICANT AND/OR AGENT AT THE BEGINNING OF THE AGENDA. BOTH PARTIES MUST AGREE UPON THE DATE OF DEFERRAL. IF THE APPLICANT/AGENT IS NOT PRESENT, THE ADMINISTRATIVE ASSISTANT MUST RECEIVE A LETTER, PRIOR TO THE HEARING DATE, REQUESTING A SPECIFIC DEFERRAL DATE. THE BOARD WILL DISCUSS AND MAKE A DECISION AT THE HEARING. THE APPLICANT/AGENT WILL THEN BE INFORMED OF THE DEFERRAL DATE AND REASON.

A. Call to Order: 9:00 A.M. Adjourned: 9:53 A.M.
B. Changes and/or Additions to the Agenda
C. New or Old Business

CASES WHICH REQUIRE PUBLIC NOTIFICATION
MAJOR SUBDIVISIONS, VACATIONS, SIA EXTENSIONS AND SITE DEVELOPMENT PLANS

1. Project # 1005237
06DRB-01758 Major-Vacation of Pub Right-of-Way
06DRB-01759 Major-Vacation of Public Easements
06DRB-01760 Minor-Sketch Plat or Plan

JEFF MORTENSEN & ASSOCIATES INC agent(s) for MARK 3S INC request(s) the above action(s) for all or a portion of Lot(s) 9 & 10, Block(s) 20, Tract(s) 3, NORTH ALBUQUERQUE ACRES, UNIT 3 (to be known as **TRACTS A & B, MARK 3S, HOLLY DEVELOPMENT),** zoned SU-2 FOR MIXED USE, located on HOLLY AVE NE, between VENTURA ST NE and HOLBROOK ST NE containing approximately 1 acre(s). [REF: 06EPC-01580, 06EPC-01581] (C-20) **THE VACATIONS WERE APPROVED AS SHOWN ON EXHIBIT B IN THE PLANNING FILE. THE ABOVE REQUEST WAS REVIEWED AND COMMENTS WERE GIVEN.**

2. **Project # 1001178**
06DRB-01757 Major-Vacation of Pub Right-of-Way
06DRB-01756 Minor-Prelim&Final Plat Approval

SURVEYS SOUTHWEST LTD agent(s) for RUSSELL WHITENER request(s) the above action(s) for all or a portion of Tract(s) A-1-B-3, **ACME ACRES AND A PORTION OF VACATED ALISO AVE NE,** zoned C-3 heavy commercial zone, located on CUTLER AVE NE, between ALISO AVE NE and I-40 containing approximately 1 acre(s). [REF: DRB-85-738, 01DRB-01573] (H-17) **THE VACATION WAS APPROVED AS SHOWN ON EXHIBIT B IN THE PLANNING FILE. THE PRELIMINARY AND FINAL PLAT WAS APPROVED WITH FINAL SIGN OFF DELEGATED TO CITY ENGINEER FOR AMAFCA SIGNATURE, CITY STORM DRAIN EASEMENT AND REAL PROPERTY SIGNATURE AND TRANSPORTATION DEVELOPMENT FOR STREET PLACEMENT.**

3. **Project # 1004526**
06DRB-01761 Major-Vacation of Pub Right-of-Way

INEZ AGUILAR request(s) the above action(s) for all or a portion of Tract(s) 400, **TOWN OF ATRISCO GRANT, UNIT 3,** zoned R-D residential and related uses zone, developing area, located on 75TH ST SW, between SAN IGNACIO RD SW and AMOLE DEL NORTE SW containing approximately acre(s).[REF: 05DRB-01678] *[Deferred from 1/10/07]* (L-10) **DEFERRED AT THE AGENT'S REQUEST TO 1/17/07.**

4. **Project # 1004428**
06DRB-01121 Major-Vacation of Public Easements
06DRB-01119 Major-Preliminary Plat Approval
06DRB-01122 Minor-Temp Defer SDWK

MARK GOODWIN & ASSOCIATES agent(s) for ALBUQUERQUE RIO BRAVO PARTNERS LLC request(s) the above action(s) for all or a portion of Tract(s) RR-3A, RR-3B, RR-3C, RR-3D and RR-3E, TOWN OF ATRISCO GRANT (to be known as **CEJA VISTA**) zoned SU-1, C-1, R-LT, located on DENNIS CHAVEZ BLVD SW, between MEADE AVE SE and 118TH ST SW containing approximately 99 acre(s). [REF: 05DRB-01460, 05DRB-01461] *[Deferred from 8/30/06 & 9/27/06 & 10/4/06 & 10/18/06 & 11/1/06 & 11/29/06 & 12/13/06 & 1/10/07]* (P-9) **DEFERRED AT THE AGENT'S REQUEST TO 1/17/07.**

5. **Project # 1002739**
06DRB-01621 Major-Vacation of Public Easements
06DRB-01622 Major-Vacation of Pub Right-of-Way
06DRB-01623 Minor-Final Plat Approval

MARK GOODWIN & ASSOCIATES agent(s) for KB HOME NEW MEXICO INC request(s) the above action(s) for **ANDERSON HEIGHTS, UNIT 5A,** zoned RD/RLT, located on 118TH ST SW, between DENNIS CHAVES BLVD SW and COLOBEL AVE SW containing approximately 41 acre(s). [REF: 06DRB-01431] *[Deferred from 12/6/06 & 12/13/06 & 12/20/06] [Deferred from 1/3/07 & 1/10/07]* (P-8) **DEFERRED AT THE BOARD'S REQUEST TO 1/17/07.**

SITE DEVELOPMENT PLANS (EPC FINAL SIGN-OFF) AMENDED PLANS AND MASTER DEVELOPMENT PLANS (CITY COUNCIL FINAL SIGN-OFF)

NOTE: IF THE APPLICANT/AGENT IS NOT PRESENT WHEN THEIR REQUEST IS CALLED, THEN THE REQUEST MAY BE INDEFINITELY DEFERRED ON A NO SHOW.

THERE ARE NO SITE DEVELOPMENT PLANS THIS WEEK . . .

MINOR PLATS, FINAL (MAJOR) PLATS, AMENDED PLATS AND PLANS

6. **Project # 1003429**
07DRB-00002 Major-Final Plat Approval

BOHANNAN HUSTON INC agent(s) for CURB INC request(s) the above action(s) for all or a portion of Tract(s) 16B & 16C, EL RANCHO GRANDE, UNIT 2 (to be known as **SIERRA RANCH SUBDIVISION**, zoned R-D, located on GIBSON BLVD SW and AMOLE MESA AVE SW and containing approximately 28 acre(s). [REF: 06DRB000003] (N-8) **THE FINAL PLAT WAS APPROVED WITH FINAL SIGN OFF DELEGATED TO PARKS FOR OPEN SPACE NOTE AND PLANNING FOR APS LANGUAGE AND TO RECORD.**

7. **Project # 1003369**
07DRB-00003 Major-Final Plat Approval

SHAKEEL RIZVI request(s) the above action(s) for all or a portion of Lot(s) 6 & 7, Tract(s) 3, Block(s) 16, **NO ALBUQUERQUE ACRES, UNIT 3 (to be known as VINTNER COURT)** zoned R-D, (5 DU/ACRE), located on WILSHIRE AVE NE, between VENTURA ST NE and HOLBROOK ST NE containing approximately 2 acre(s). [REF: 06DRB-01601, 06DRB-01602] (C-20) **THE FINAL PLAT WAS APPROVED WITH FINAL SIGN OFF DELEGATED TO TRANSPORTATION DEVELOPMENT FOR 20-FOOT PEDESTRIAN EASEMENT, PRIVATE**

DRAINAGE EASEMENT AND A COPY OF THE APPROVED SIA AND TO PLANNING TO RECORD THE PLAT.

NO ACTION IS TAKEN ON THESE CASES:
APPLICANT - AGENT IS REQUIRED TO BE AT THE MEETING

8. **Project # 1005312**
06DRB-01771 Minor-Sketch Plat or Plan

PATRICK SERDO request(s) the above action(s) for all or a portion of Lot(s) 1, Block(s) 54, **FOUR HILLS 17TH INSTALLMENT,** zoned R-1, located on WAGON TRAIN DR SE, between CASTELLANO SE and CATRON SE containing approximately 1 acre(s). [Deferred from 1/3/07] (M-23) **THE ABOVE REQUEST WAS REVIEWED AND COMMENTS WERE GIVEN.**

9. Approval of the Development Review Board Minutes for January 3, 2007. **THE DRB MINUTES WERE DEFERRED TO 1/17/07.**

ADJOURNED: 9:53 A.M.

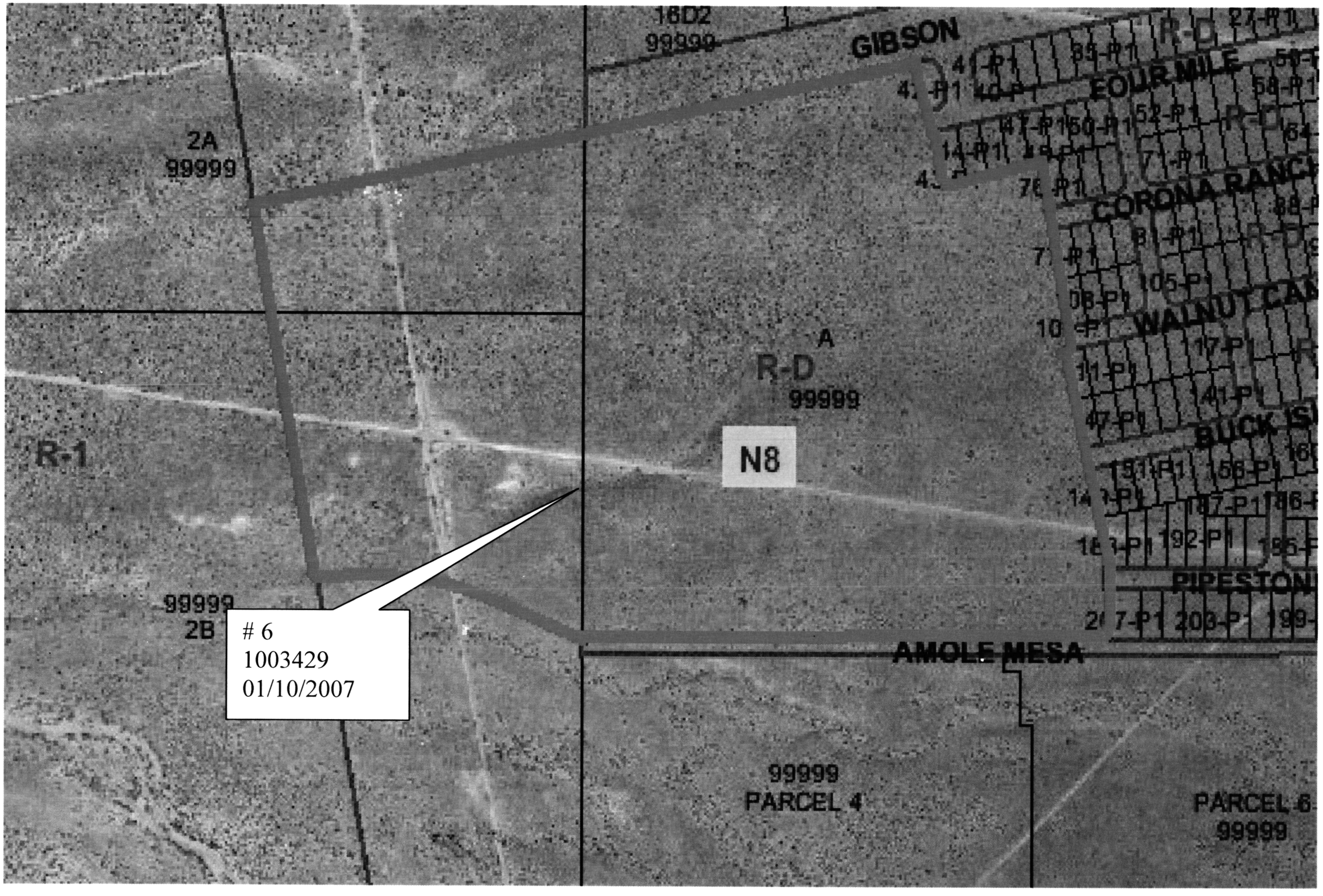
16D2
99999
GIBSON
2A
99999
R-D
EQUR MILE
CORONA RANCH
WALNUT CA
BUCK IS
PIPESTON
A
R-D
99999
N8
R-1
99999
2B
6
1003429
01/10/2007
AMOLE MESA
99999
PARCEL 4
PARCEL 6
99999

CITY OF ALBUQUERQUE

PLANNING DEPARTMENT
DEVELOPMENT AND BUILDING SERVICES
HYDROLOGY DEVELOPMENT SECTION

DEVELOPMENT REVIEW BOARD – SPEED MEMO

DRB CASE NO/PROJECT NO: 1003429 **AGENDA ITEM NO: 6**

SUBJECT:

Final Plat

ACTION REQUESTED:

REV/CMT: ( ) **APPROVAL: (X)** **SIGN-OFF: ( )** **EXTN: ( )** **AMEND: ( )**

ENGINEERING COMMENTS:

No adverse comments.

P.O. Box 1293

Albuquerque

New Mexico 87103

www.cabq.gov

RESOLUTION:

APPROVED ___; DENIED ___; DEFERRED ___; COMMENTS PROVIDED ___; WITHDRAWN ___

DELEGATED: **(SEC-PLN) (SP-SUB) (SP-BP) (FP)** TO: **(UD) (CE) (TRANS) (PRKS) (PLNG)**

SIGNED: Bradley L. Bingham
City Engineer / AMAFCA Designee

DATE: JANUARY 10, 2007

OFFICIAL NOTICE OF DECISION

CITY OF ALBUQUERQUE
PLANNING DEPARTMENT
DEVELOPMENT REVIEW BOARD

January 11, 2006

7. Project # 1003429
06DRB-00003 Minor-Extension of Preliminary Plat

BOHANNAN HUSTON INC agent(s) for CURB INC request(s) the above action(s) for all or a portion of Tract(s) 16B & 16C, EL RANCHO GRANDE (to be known as **SIERRA RANCH SUBDIVISION**) zoned R-LT, R-D, located on GIBSON BLVD SW and AMOLE MESA AVE SW, containing approximately 62 acre(s). (N-8)

At the January 11, 2006, Development Review Board meeting, a one-year extension of the preliminary plat was approved.

Sheran Matson, AICP, DRB Chair

Cc:Curb Inc., 5160 San Francisco NE, 87109
Bohannan Huston Inc., 7500 Jefferson NE, 87109
Marilyn Maldonado, Planning Department, 4th Floor, Plaza del Sol Bldg.
File

CITY OF ALBUQUERQUE

PLANNING DEPARTMENT
DEVELOPMENT AND BUILDING SERVICES
HYDROLOGY DEVELOPMENT SECTION

DEVELOPMENT REVIEW BOARD – SPEED MEMO

DRB CASE NO/PROJECT NO: 1003429 **AGENDA ITEM NO: 7**

SUBJECT:

Preliminary Plat – Extension

ACTION REQUESTED:

REV/CMT: ( ) **APPROVAL: (X)** **SIGN-OFF: ( )** **EXTN: ( )** **AMEND: ( )**

ENGINEERING COMMENTS:
No objection to Extension request.

RESOLUTION:

APPROVED X; DENIED ___; DEFERRED ___; COMMENTS PROVIDED ___; WITHDRAWN ___

DELEGATED: **(SEC-PLN) (SP-SUB) (SP-BP) (FP)** TO: **(UD) (CE) (TRANS) (PRKS) (PLNG)**

SIGNED: Bradley L. Bingham
City Engineer / AMAFCA Designee

DATE: JANUARY 11, 2006

P.O. Box 1293

Albuquerque

New Mexico 87103

www.cabq.gov

CITY OF ALBUQUERQUE
Planning Department
January 11, 2006
DRB Comments

ITEM # 7

PROJECT # 1003429 APPLICATION # 05-00003

RE: Sierra Ranch Subdivision/ext of pp

There is no objection to this extension request.

Andrew Garcia.

Andrew Garcia, Planning Alternate
924-3858 fax 924-3864 agarcia@cabq.gov

16D2
16D1
GIBSON + SW DELGADO SW
GIBSON
FOUR MILE
CORONA RANCH
WALNUT CANYON
BUCK ISLAND
BIG SPRINGS
PIPESTONE
AMOLE MESA
GHOST RANCH
BISON SPRINGS
MESSINA
2A
2B
R-1
R-D
A
N8
R-LT
B
PARCEL 4
PARCEL 6
R-LT
PARCEL 9
0
732ft

#16 832

COMPLETED 06/27/05 STT

DRB CASE ACTION LOG (FINAL PLAT)

REVISED 2/5/04

This sheet must accompany your plat or site plan to obtain delegated signatures. Return sheet with site plan/plat once comments are addressed.

Rec'd 4/4/0.2080

DRB Application No.: **05DRB-00995 (FP)** Unit | Project # **1003429**

Project Name: **SIERRA RANCH SUBDIVISION**

Agent: Bohannan Huston Inc. | Phone No.: 823-1000

Your request for (**SDP for SUB), (SDP for BP), (FINAL PLATS), (MASTER DEVELOP. PLAN),** was approved on 6/22/05 by the DRB with delegation of signature(s) to the following departments.

OUTSTANDING SIGNATURES COMMENTS TO BE ADDRESSED

- ☐ TRANSPORTATION: _____
- ☐ _____
- ☐ _____
- ☐ _____
- ☐ _____

- ☐ UTILITIES: _____
- ☐ _____
- ☐ _____
- ☐ _____
- ☐ _____

- ☐ CITY ENGINEER / AMAFCA: _____
- ☐ _____
- ☐ _____
- ☐ _____
- ☐ _____

- ☐ PARKS / CIP: _____
- ☐ _____
- ☐ _____
- ☐ _____
- ☐ _____

- ☒ PLANNING (Last to sign): recording _____
- ☐ _____
- ☐ _____
- ☐ _____
- ☐ _____

6/24/05

- ☐ **Planning must record this plat. Please submit the following items:**
  - -The original plat and a mylar copy for the County Clerk.
  - -Tax certificate from the County Treasurer.
  - -Recording fee (checks payable to the County Clerk). RECORDED DATE: _____
  - -Tax printout from the County Assessor.
- ☐ **Include 3 copies of the approved site plan along with the originals.**
- ☐ **County Treasurer's signature must be obtained prior to the recording of the plat with the County Clerk.**
- ☐ **Property Management's signature must be obtained prior to Planning Department's signature.**
- ☐ **AGIS DXF File approval required.** — OKAY
- ☐ **Copy of recorded plat for Planning.**

Called 06/24/05 to say plat was filed STT

Project Number 1003429

#16

DRB CASE ACTION LOG (FINAL PLAT)

REVISED 2/5/04

This sheet must accompany your plat or site plan to obtain delegated signatures. Return sheet with site plan/plat once comments are addressed.

DRB Application No.: **05DRB-00995 (FP)** Unit | Project # **1003429**

Project Name: **SIERRA RANCH SUBDIVISION**

Agent: Bohannan Huston Inc. | Phone No.: 823-1000

Your request for (**SDP for SUB), (SDP for BP), (FINAL PLATS), (MASTER DEVELOP. PLAN**), was approved on 6/22/05 by the DRB with delegation of signature(s) to the following departments.
OUTSTANDING SIGNATURES COMMENTS TO BE ADDRESSED

- ☐ TRANSPORTATION: _____
- ☐ _____
- ☐ _____
- ☐ _____
- ☐ _____

- ☐ UTILITIES: _____
- ☐ _____
- ☐ _____
- ☐ _____
- ☐ _____

- ☐ CITY ENGINEER / AMAFCA: _____
- ☐ _____
- ☐ _____
- ☐ _____
- ☐ _____

- ☐ PARKS / CIP: _____
- ☐ _____
- ☐ _____
- ☐ _____
- ☐ _____

- ☒ PLANNING (Last to sign): recording
- ☐ _____
- ☐ _____
- ☐ _____

- ☐ **Planning must record this plat. Please submit the following items:**
  - -The original plat and a mylar copy for the County Clerk.
  - -Tax certificate from the County Treasurer.
  - -Recording fee (checks payable to the County Clerk). RECORDED DATE: _____
  - -Tax printout from the County Assessor.
  - ☐ **Include 3 copies of the approved site plan along with the originals.**
  - ☐ **County Treasurer's signature must be obtained prior to the recording of the plat with the County Clerk.**
  - ☐ **Property Management's signature must be obtained prior to Planning Department's signature.**
  - ☐ **AGIS DXF File approval required.** — Okay
  - ☐ **Copy of recorded plat for Planning.**

Project Number 1003429

CITY OF ALBUQUERQUE
PLANNING DEPARTMENT
June 22, 2005
DRB Comments

AGENDA ITEM # 16

PROJECT # 1003429 APPLICATION # 05-00995

RE: Tracts 16B &C, Sierra Ranch/final plat

Are there any differences between the preliminary plat & the final plat?

SIA is recorded. No objection to the final plat.

However, Planning will take delegation until the plat is ready for recording as Planning is required to file the plat per the Subdivision Ordinance.

Sheran Matson, AICP
924-3880 fax 924-3864
smatson@cabq.gov

City of Albuquerque
Parks and Recreation Department

PO Box 1293, Albuquerque, New Mexico 87103

Inter-Office Correspondence

Development Review Board Comments

Project Number: 1003429	**DRB Date:** 6/22/2005
Application Number: 05DRB-00995	**Item Number:** 16

Subdivision: Sierra Ranch Subdivision
Tracts 16B and 16C, El Rancho Grande

Zoning: RLT, RD

Zone Page: N-08

New Lots (or units) : 383

Request for:

- [ ] Sketch Plat Review & Comment
- [ ] Bulk Land Variance
- [ ] Site Development Plan for Subdivision
- [ ] Site Development Plan for Building Permit
- [ ] Preliminary Plat
- [x] Final Plat
- [ ] Vacation of Public RoW
- [ ] Vacation of Public Easement
- [ ] Vacation of Private Easement
- [ ] Temp. Deferral of Sidewalk Construction
- [ ] Sidewalk Variance
- [ ] SIA Extension
- [ ] Other

Parks and Recreation Comments:

This development will be subject to Impact Fees for Parks, Recreation, Trails and Open Space.

Signed: CS

Christina Sandoval, (DMD) Phone: 768-3808

CITY OF ALBUQUERQUE

PLANNING DEPARTMENT
DEVELOPMENT AND BUILDING SERVICES
HYDROLOGY DEVELOPMENT SECTION

DEVELOPMENT REVIEW BOARD--SPEED MEMO

DRB CASE NO/PROJECT NO: 1003429 **AGENDA ITEM NO: 16**

SUBJECT:

Final Plat

ACTION REQUESTED:

REV/CMT:() APP:() SIGN-OFF:(x) EXTN:() AMEND:()

ENGINEERING COMMENTS:

An executed Subdivision Improvements Agreement with financial guarantees is on file for Final Plat sign-off.

RESOLUTION:

APPROVED ____; DENIED _____; DEFERRED _____; COMMENTS PROVIDED ___; WITHDRAWN

SIGNED-OFF: **(SEC-PLN) (SP-SUB) (SP-BP) (FP)** BY: **(UD) (CE) (TRANS) (PKS) (PLNG)**

DELEGATED: **(SEC-PLN) (SP-SUB) (SP-BP) (FP)** TO: **(UD) (CE) (TRANS) (PKS) (PLNG)**

FOR:

SIGNED: Bradley L. Bingham
City Engineer/AMAFCA Designee

DATE: June 22, 2005

P.O. Box 1293

Albuquerque

New Mexico 87103

www.cabq.gov

DEVELOPMENT REVIEW BOARD
ACTION SHEET

Plaza del Sol Hearing Room, Basement, Plaza del Sol Building

June 22, 2005 9:00 a.m.

MEMBERS:

Sheran Matson, AICP, DRB Chair
Claire Senova, Administrative Assistant

Wilfred Gallegos, Transportation Development
Brad Bingham, Alternate City Engineer
Roger Green, Utility Development
Christina Sandoval, Parks & Recreation

****

NOTE: UNLESS ANNOUNCED DURING THE MEETING, THE DEVELOPMENT REVIEW BOARD WILL NOT TAKE A LUNCH BREAK.

NOTE: INDIVIDUALS WITH DISABILITIES WHO NEED SPECIAL ASSISTANCE TO PARTICIPATE AT THIS MEETING SHOULD CONTACT CLAIRE SENOVA, PLANNING DEPARTMENT, AT 924-3946. HEARING IMPAIRED USERS MAY CONTACT HER VIA THE NEW MEXICO RELAY NETWORK BY CALLING TOLL-FREE:1-800-659-8331.

NOTE: REQUESTS FOR DEFERRAL OF CASES WILL BE DISCUSSED BY THE BOARD AND THE APPLICANT AND/OR AGENT AT THE BEGINNING OF THE AGENDA. BOTH PARTIES MUST AGREE UPON THE DATE OF DEFERRAL. IF THE APPLICANT/AGENT IS NOT PRESENT, THE ADMINISTRATIVE ASSISTANT MUST RECEIVE A LETTER, PRIOR TO THE HEARING DATE, REQUESTING A SPECIFIC DEFERRAL DATE. THE BOARD WILL DISCUSS AND MAKE A DECISION AT THE HEARING. THE APPLICANT/AGENT WILL THEN BE INFORMED OF THE DEFERRAL DATE AND REASON.

A. Call to Order: 9:00 A.M. Adjourned: 12:55 P.M.
B. Changes and/or Additions to the Agenda
C. New or Old Business

CASES WHICH REQUIRE PUBLIC NOTIFICATION
MAJOR SUBDIVISIONS, VACATIONS, SIA EXTENSIONS AND SITE DEVELOPMENT PLANS

1.	**Project # 1000635** 05DRB-00904 Major-One Year SIA	TIERRA WEST LLC agent(s) for DE BARTOLO DEVELOPMENT request(s) the above action(s) for all or a portion of Tract(s) 38-1A1, 38-2A1, 38-2A2 and 38-3A1, **TAYLOR RANCH,** zoned SU-1 FOR C-1, located on MONTANO RD NW, between MONTANO PLAZA DR NW and COORS BYPASS BLVD NW containing approximately 4 acre(s). [REF: 00DRB00878, 02DRB01040, 04DRB01698, 04DRB01764] *[Deferred from 6/22/05]* (E-12) **DEFERRED AT AGENT'S REQUEST TO 6/29/05.**

2. **Project # 1000650**
05DRB-00903 Major-Two Year SIA

TIERRA WEST LLC agent(s) for WAL-MART STORES EAST LP request(s) the above action(s) for all or a portion of Tract(s) 1-A-1, **LANDS OF LAMONICA & WENK,** zoned SU-1, C-1, located on COORS BLVD SW, between RIO BRAVO BLVD SW and LAMONICA RD SW containing approximately 20 acre(s). [REF: 00EPC00905, 00EPC00907, 04DRB00277] (P-10) **A 6-MONTH EXTENSION OF THE SIA WAS APPROVED.**

3. **Project # 1003874**
05DRB-00894 Major-Vacation of Public Easements

ISAACSON & ARFMAN agent(s) for CURB INC request(s) the above action(s) for Tract(s) 16-D, 16-E and 16-F, **EL RANCHO GRANDE, UNIT 16,** zoned R-D, located on GIBSON BLVD SW, between MESSINA DR SW and DELGADO DR SW. [REF: 04DRB00717, 04DRB01892, 05DRB00032, 05DRB0033, 05DRB00034, 05DRB00035, 05DRB00126, 05DRB00199, 05DRB00342] (N-8) **VACATION WAS APPROVED AS SHOWN ON EXHIBIT B IN THE PLANNING FILE.**

4. **Project # 1004223**
05DRB-00884 Major-Vacation of Public Easements
05DRB-00885 Minor-Prelim&Final Plat Approval

SURVEYS SOUTHWEST agent(s) for LUTHER MARTINEZ request(s) the above action(s) for all or a portion of Tract(s) 6-B, SUNDT'S INDUSTRIAL CENTER (to be known as **RENAISSANCE CENTER III, PARCEL D-1**), zoned M-2 & SU-1 1P, located on MONTANO RD NE, between ALEXANDER BLVD NE and DESERT SURF CIRCLE NE containing approximately 9 acre(s). [REF: V-96-84, DRB-96-377] *[Deferred from 6/22/05]* (F-16) **DEFERRED AT THE AGENT'S REQUEST TO 6/29/05.**

5.	**Project # 1004228** 05DRB-00888 Major-Vacation of Pub Right-of-Way	PHILIP TURNER agent(s) for JAMES P GUTHRIE request(s) the above action(s) for all or a portion of Tract(s) 89A2, 89B2, 89B3, 89C3, 89C4 SUNRISE HEIGHTS ADDITION, (to be known as **GUTHRIE COMMERCE PARK**) zoned M-1, located on MONTANO NE and RENAISSANCE NE containing approximately 1 acre(s). (F-15) **VACATION APPROVED AS SHOWN ON EXHIBIT B IN THE PLANNING FILE.**
6.	**Project # 1004232** 05DRB-00896 Major-Vacation of Public Easements	MIGUEL TRUJILLO agent(s) for WILLIAM WILSON request(s) the above action(s) for all or a portion of Block(s) 13, Tract(s) A, **CLAYTON HEIGHTS SUBDIVISION,** zoned C-2 community commercial zone, located on GIBSON BLVD SE, between BUENA VISTA SE and WILMOORE DR SE containing approximately 2 acre(s). [Will be readvertised] (L-15) **INDEFINITELY DEFERRED ON A NO SHOW.**
7.	**Project # 1004233** 05DRB-00899 Major-Preliminary Plat Approval 05DRB-00900 Major-Vacation of Public Easements 05DRB-00901 Minor-Sidewalk Waiver 05DRB-00902 Minor-Temp Defer SDWK	BOHANNAN HUSTON INC agent(s) for WESTLAND DEVELOPMENT CO request(s) the above action(s) for all or a portion of Tract(s) I-2, WESTLAND NORTH (to be known as **STORM CLOUD SUBDIVISION)** zoned SU-2, RLT, located on TIERRA PINTADA ST SW, between ARROYO VISTA BLVD SW and LADERA DR SW containing approximately 107 acre(s). *[Deferred from 6/22/05]* (H-9, J-8, J-9) **DEFERRED AT THE AGENT'S REQUEST TO 6/29/05.**

8. **Project # 1004071**
05DRB-00511 Major-Bulk Land Variance
05DRB-00512 Major-Vacation of Public Easements
05DRB-00513 Minor-Prelim&Final Plat Approval

JEFF MORTENSEN & ASSOCIATES agent(s) for ALBUQUERQUE PUBLIC SCHOOLS & NEW MEXICO STATE LAND OFFICE, request(s) the above action(s) for **GOVERNMENT LOTS** 1-4, SECTION 16, 11N, R2E AND THE SOUTH 1/2 OF THE SOUTH 1/2 OF SECTION 16, 11N, R2E, zoned RO-20, located on RAINBOW BLVD NW, between COMPASS DR NW and PETROGLYPH NATIONAL MONUMENT containing approximately 289 acre(s). *[Deferred from 4/20/05 & 5/11/05 & 6/1/05]* (C-9) **BULK LAND VARIANCE APPROVED. VACATION WAS APPROVED AS SHOWN ON EXHIBIT B IN THE PLANNING FILE. PRELIMINARY PLAT WAS APPROVED WITH FINAL SIGN OFF DELEGATED TO PLANNING FOR 15-DAY APPEAL PERIOD, RECORDING OF PLAT AND AGIS DXF FILE.**

9. **Project # 1004204**
05DRB-00871 Major-Vacation of Public Easements

PRECISION SURVEYS agent(s) for WESTLAND DEVELOPMENT CO request(s) the above action(s) for all or a portion of Block(s) F, Tract(s) A, **CEDAR RIDGE ESTATES, UNIT 2,** zoned R-1, located on QUAIL BRUSH DR NW and ROSEBUD DR NW. [REF: S-93-23, DRB-96-150] *[Deferred from 6/15/05]*(J-10) **VACATION WAS APPROVED AS SHOWN ON EXHIBIT B IN THE PLANNING FILE.**

05DRB-01007 Minor-Prelim&Final Plat Approval

PRECISION SURVEYS INC agent(s) for WESTLAND DEVELOPMENT CO., INC request(s) the above action(s) for all or a portion of Block(s) F, Tract(s) A, **CEDAR RIDGE ESTATES, UNIT 2,** zoned R-1 residential zone, located on SILKWOOD AVE NW and LOS VOLCANES RD NW and containing approximately 1 acre(s). [REF: S-93-23, DRB-96-150] (J-10) **PRELIMINARY PLAT WAS APPROVED WITH FINAL SIGN OFF DELEGATED TO CITY ENGINEER FOR CERTIFICATION OF GRADING PERMIT AND ACCEPTANCE OF STORM DRAIN IN LOS VOLCANES AND PLANNING FOR AGIS DXF FILE AND 15-DAY APPEAL PERIOD.**

SITE DEVELOPMENT PLANS (EPC FINAL SIGN-OFF) AMENDED PLANS AND MASTER DEVELOPMENT PLANS (CITY COUNCIL FINAL SIGN-OFF)

NOTE: IF THE APPLICANT/AGENT IS NOT PRESENT WHEN THEIR REQUEST IS CALLED, THEN THE REQUEST MAY BE INDEFINITELY DEFERRED ON A NO SHOW.

10. Project # 1004266
05DRB-01017 Minor-SiteDev Plan BldPermit

ADVANCED ENGINEERING & CONSULTING agent(s) for MAVERICK DEVELOPMENT INC., RON SPRADLIN request(s) the above action(s) for all or a portion of Lot(s) 29, **ALAMEDA BUSINESS PARK,** zoned SU-2 IP, located on ALAMEDA DR NE, between ALAMEDA PARK DR NE and the AMAFCA NORTH DIVERSION CHANNEL, containing approximately 2 acre(s). [REF: DRB-98-223] [*Deferred from 6/22/05]* (C-16) **DEFERRED AT THE AGENT'S REQUEST TO 6/29/05.**

11. Project # 1000195
05DRB-01016 Minor-SiteDev Plan Subd/EPC
05DRB-01018 Minor-SiteDev Plan BldPermit/EPC

MARK GOODWIN & ASSOCIATES agent(s) for GRAYBAR ELECTRIC request(s) the above action(s) for all or a portion of Lot(s) A, B, C & D, **GATEWAY INDUSTRIAL PARK ADDITION,** zoned SU-1 PLANNED INDUSTRIAL DEVELOPMENT, located on MENAUL BLVD NE, between NBSR RR AND BROADWAY NE and containing approximately 5 acre(s). [REF: 05EPC00584, 05EPC00583] **[Elvira Lopez, EPC Case Planner]** (H-14) **SITE PLAN FOR SUBDIVISION WAS APPROVED WITH FINAL SIGN OFF DELEGATED TO PLANNING FOR EPC CASE PLANNER'S INITIALS. SITE PLAN FOR BUILDING PERMIT WAS APPROVED WITH FINAL SIGN OFF DELEGATED TO TRANSPORTATION DEVELOPMENT FOR STALL DIMENSIONS AND PLANNING FOR EPC CASE PLANNER'S INITIALS.**

05DRB-01014 Minor-Prelim&Final Plat Approval
05DRB-01015 Minor-Vacation of Private Easements

MARK GOODWIN & ASSOCIATES, PA agent(s) for HENSLEY CONSTRUCTION, INC. request(s) the above action(s) for all or a portion of Tract(s) A, B, C & D, GATEWAY INDUSTRIAL PARK, (to be known as **GRAYBAR ELECTRIC)** zoned SU-1 PLANNED INDUSTRIAL DEVELOPMENT, located on MENAUL BLVD NE and BROADWAY BLVD NE and containing approximately 5 acre(s). (H-14) **PRELIMINARY**

PLAT WAS APPROVED WITH FINAL SIGN OFF DELEGATED TO TRANSPORTATION DEVELOPMENT FOR EASEMENTS. VACATION WAS APPROVED AS SHOWN ON EXHIBIT B IN THE PLANNING FILE.

12. Project # 1003859

05DRB-00994 Minor-SiteDev Plan Subd/EPC

CONSENSUS PLANNING agent(s) for SILVERLEAF VENTURES LLC request(s) the above action(s) for all or a portion of Tract(s) A & 6B, LANDS OF RAY GRAHAM III, OVENWEST CORPORATION AND CITY OF ALBUQUERQUE, (to be known as **NORTH ANDALUCIA @ LA LUZ**) zoned SU-1, O-1, C-2 and PRD, located on COORS BLVD NW, between MONTANO RD NW and LEARNING RD NW containing approximately 70 acre(s). [REF: 04EPC00855, 02EPC01770, 02EPC01771, 04EPC01845] **[Juanita Garcia, EPC Case Planner]** (E-12/F-12) **SITE PLAN FOR SUBDIVISION WAS APPROVED WITH FINAL SIGN OFF DELEGATED TO TRANSPORTATION DEVELOPMENT FOR MTB APPROVAL, NMDOT APPROVAL AND DMD APPROVAL.**

05DRB-01010 Minor-Prelim&Final Plat Approval

PRECISION SURVEYS INC agent(s) for SILVERLEAF VENTURES LLC request(s) the above action(s) for all or a portion of Tract(s) A & 6B, LANDS OF RAY A GRAHAM, (to be known as **NORTH ANDALUCIA @ LA LUZ**) zoned SU-1, O-1, C-2 and PRD, located on COORS BLVD NW, between MONTANO RD NW and LEARNING RD NW containing approximately 64 acre(s).[REF: [REF: 04EPC00855, 02EPC01770, 02EPC01771, 04EPC01845](E-12/F-12) **WITH THE SIGNING OF THE INFRASTRUCTURE LIST DATED 6/22/05 AND APPROVAL OF THE GRADING PLAN ENGINEER STAMP DATED 3/14/05 THE PRELIMINARY PLAT WAS APPROVED WITH THE FOLLOWING CONDITIONS OF FINAL PLAT: A PUBLIC DRAINAGE EASEMENT IS REQUIRED ON TRACT 9. A WATERLINE MUST BE RELOCATED AND ACCEPTED BY WATER UTILITY DEPARTMENT**

OR HAVE A TEMPORARY EASEMENT IN PLACE FOR THE EXISTING WATER LINE LOCATION. A ROUND-ABOUT DESIGN SHALL BE PROVIDED. STREET INTERSECTION ANGLES MUST BE REEVALUATED. THE FINAL PLAT WAS INDEFINITELY DEFERRED FOR THE SIA.

13. Project # 1003883
05DRB-00999 Minor-SiteDev Plan BldPermit

MULLEN HELLER ARCHITECTURE agent(s) for LANDHLAFORD, LLC request(s) the above action(s) for all or a portion of Lot(s) 9, Tract(s) 9-A-1A-2, **JOURNAL CENTER PHASE 2, UNIT 1,** zoned IP, located on TIBURON ST NE and JEFFERSON ST NE and containing approximately 3 acre(s). (D-17) **SITE PLAN FOR BUILDING PERMIT WAS APPROVED WITH FINAL SIGN OFF DELEGATED TO TRANSPORTATION DEVELOPMENT FOR PARKING DIMENSIONS AND PLANNING FOR WRITTEN COMMENTS AND 3 COPIES OF THE SITE PLAN.**

05DRB-01000 Minor-Prelim&Final Plat Approval

MARK GOODWIN & ASSOCIATES, PA agent(s) for LANDHLAFORD, LLC request(s) the above action(s) for all or a portion of Lot(s) 9, Tract(s) 9-A-1A-2, JOURNAL CENTER PHASE 2, UNIT 1, (to be known as **JOURNAL CENTER LAW OFFICES**) zoned IP, located on TIBURON ST NE, between JEFFERSON ST NE and containing approximately 3 acre(s). (D-17) **WITH THE SIGNING OF THE INFRASTRUCTURE LIST DATED 6/22/05 THE PRELIMINARY PLAT WAS APPROVED WITH THE CONDITION OF FINAL PLAT: PROVIDE A SIDEWALK EASEMENT FOR THE MEANDERING SIDEWALK. FINAL PLAT WAS INDEFINITELY DEFERRED FOR THE SIA.**

14. Project # 1003057
05DRB-00980 Minor-SiteDev Plan BldPermit

KEN HOVEY, agent(s) for I-40 GATEWAY WEST LLC request(s) the above action(s) for all or a portion of Block(s) 1, Tract(s) A-2-C-1, **CLIFFORD WEST BUSINESS PARK, UNIT 3,** zoned IP industrial park zone, located on UNSER BLVD NW, between LOS VOLCANES NW and SAUL BELL RD NW containing approximately 7 acre(s).[REF: Z-97-11, AA-98-54] [Given Project #1004257 in error.] *[Deferred from 6/22/05]* (K-9) **DEFERRED AT THE AGENT'S REQUEST TO 6/29/05.**

MINOR PLATS, FINAL (MAJOR) PLATS, AMENDED PLATS AND PLANS

15. Project # 1003591
05DRB-00996 Minor-Final Plat Approval

BOHANNAN HUSTON INC. agent(s) for D.R. HORTON, INC. request(s) the above action(s) for all or a portion of Tract(s) 31A-1-A, **SUNGATE ESTATES SUBDIVISION, UNIT 1,** zoned R-2 FOR R-T & R-LT, located on GIBSON BLVD SW, between BLAKE RD SW and 98TH ST SW containing approximately 46 acre(s). [REF: 04DRB-01185] (N-9) **FINAL PLAT WAS APPROVED WITH FINAL SIGN OFF DELEGATED TO PARKS FOR CASH-IN-LIEU AND PLANNING FOR PLAT RECORDING.**

16. Project # 1003429
05DRB-00995 Minor-Final Plat Approval

BOHANNAN HUSTON INC agent(s) for CURB INC. request(s) the above action(s) for all or a portion of Tract(s) 16B and 16C, EL RANCHO GRANDE (to be known as **SIERRA RANCH SUBDIVISION, UNIT 1**) zoned R-LT, R-D, located on GIBSON BLVD SW, and containing approximately 62 acre(s). (N-8) **FINAL PLAT WAS APPROVED WITH FINAL SIGN OFF DELEGATED TO PLANNING FOR PLAT RECORDING.**

17. Project # 1003030
05DRB-00997 Minor-Final Plat Approval

BOHANNAN HUSTON, INC. agent(s) for CURB INC request(s) the above action(s) for all or a portion of Tract(s) 15, **EL RANCHO GRANDE, UNIT 15,** zoned R-LT, located on GIBSON BLVD SW, between BLAKE RD SW and MESSINA DR SW containing approximately 23 acre(s).[REF: 05DRB00282] (N-8) **FINAL PLAT WAS APPROVED WITH FINAL SIGN OFF DELEGATED TO PLANNING FOR PLAT RECORDING.**

18. Project # 1003571
05DRB-01002 Minor-Final Plat Approval

MARK GOODWIN & ASSOCIATES, PA agent(s) for CURB INC. request(s) the above action(s) for all or a portion of Tract(s) 9-B-1, 9-B-2 and 12-A-2, ATRISCO GRANT (to be known as **EL RANCHO GRANDE, UNIT 9B**) zoned R-LT residential zone, located south of BLAKE RD NW and west of the AMOLE CHANNEL and containing approximately 35 acre(s). [REF: 04DRB01518] (N-9) **FINAL PLAT WAS APPROVED WITH FINAL SIGN OFF DELEGATED TO TRANSPORTATION DEVELOPMENT FOR SIDEWALK WAIVER APPLICATION, TRACT A REFERENCE, AMAFCA LICENSE AGREEMENT FOR WATER AND SEWER LINES AND PLANNING FOR RECORDING OF PLAT.**

19. Project # 1002857
05DRB-01004 Minor-Final Plat Approval

MARK GOODWIN & ASSOCIATES, PA agent(s) for ANDERSON HILLS LLC request(s) the above action(s) for all or a portion of Tract(s) A & B, ARROWOOD RANCH DEVELOPMENT, (to be known as **THE HIGHLANDS @ ANDERSON HILLS, UNIT 2**) zoned R-LT residential zone, located on 98TH ST SW north of DENNIS CHAVEZ BLVD SW and containing approximately 34 acre(s).[REF:Z-99-8] (N-9) **FINAL PLAT WAS APPROVED WITH FINAL SIGN OFF DELEGATED TO PLANNING FOR PLAT RECORDING. UNIT 2 NEEDS TO BE RECORDED FIRST.**

05DRB-01006 Minor-Final Plat Approval	MARK GOODWIN & ASSOCIATES, PA agent(s) for ANDERSON HILLS LLC request(s) the above action(s) for all or a portion of Tract(s) A & B, ARROWOOD RANCH DEVELOPMENT, (to be known as **THE HIGHLANDS @ ANDERSON HILLS, UNIT 3**) zoned R-LT residential zone, located on 98TH ST SW north of DENNIS CHAVEZ BLVD SW and containing approximately 34 acre(s). [REF: Z-99-8, SPR-95-22] (N-9) **FINAL PLAT WAS APPROVED WITH FINAL SIGN OFF DELEGATED TO PLANNING FOR PLAT RECORDING.**

20. Project # 1003696 05DRB-00998 Minor-Prelim&Final Plat Approval	RIO GRANDE ENGINEERING agent(s) for J D HOME CORPORATION, request(s) the above action(s) for all or a portion of Lot(s) 26 and 27, **TORRENTINO SUBDIVISION,** zoned R-D residential and related uses zone, developing area, located on 97TH ST SW, between TOWER RD SW and SAN YGNACIO RD SW containing approximately 6 acre(s). (L-9) **PRELIMINARY AND FINAL PLAT WERE APPROVED AND SIGNED OFF BY THE BOARD.**

21. Project # 1003624 05DRB-01001 Minor-Prelim&Final Plat Approval	MICHAEL RENFRO, request(s) the above action(s) for all or a portion of Tract(s) 22-A, 22-B, 38-A and 38-B, M.R.G.C.D. MAP #34, (to be known as **SAN ISIDRO GARDENS**) zoned RA-2 residential and agricultural zone, located on SAN ISIDRO ST NW, between CANDELARIA RD NW and GRIEGOS RD NW containing approximately 2 acre(s). [REF: 04ZHE01281] [Deferred from 6/22/05] (G-13) **DEFERRED AT THE AGENT'S REQUEST TO 7/13/05.**

22. Project # 1004178
05DRB-01013 Minor-Prelim&Final Plat Approval

WAYJOHN SURVEYING INC., agent(s) for GREVEY INVESTMENTS, request(s) the above action(s) for all or a portion of Tract(s) D, E, F & G, Block(s) 27, (to be known as **MESA VILLAGE**) zoned C-1, C-2 and O-1, located on EUBANK BLVD NE between LOMAS BLVD NE and WALKER DR NE, containing approximately 5 acre(s). [REF: 05DRB00794] (J-20) **WITH THE SIGNING OF THE INFRASTRUCTURE LIST DATED 6/22/05 THE PRELIMINARY PLAT WAS APPROVED. FINAL PLAT WAS INDEFINITELY DEFERRED FOR THE SIA.**

23. Project # 1003238
05DRB-01012 Major-Final Plat Approval

TIERRA WEST LLC agent(s) for AMC DEVELOPMENT SERVICES request(s) the above action(s) for all or a portion of Lot(s) A, B C, Tract(s) 267, 268-B, 270-A-2, 270-A-1-C, 270-A-1-D, 270-B AND 315-A-1-A-1, M.R.G.C.D. MAP 35 AND LAND OF ALBERT PEREZ, TRACT(S) B1 AND B2, LAND OF MACIEL & TRUJILLO (to be known as **FLORAL MEADOWS SUBDIVISION**) zoned R-LT residential zone, located on INTERSTATE 40 between RIO GRANDE BLVD NW and MONTOYA ST NW containing approximately 8 acre(s). [REF: 04EPC00156, 04EPC00157, 04DRB00661, 04DRB01227] (H-12/H-13) **FINAL PLAT WAS APPROVED WITH FINAL SIGN OFF DELEGATED TO UTILITIES DEVELOPMENT FOR EASEMENTS ON PARCELS D & E FOR WATER/SEWER SERVICES (OR SHOW OFFSITE EASEMENTS FOR LOTS NEXT TO PARCEL E) AND TO PLANNING FOR M.R.G.C.D. SIGNATURE AND PLAT RECORDING.**

24. Project # 1004264
05DRB-01003 Minor-Prelim&Final Plat Approval

ISAACSON & ARFMAN, PA agent(s) for TERRY & SHIRLEY CURRY request(s) the above action(s) for all or a portion of Lot(s) 20, 21 and 22, Block(s) 3, **DEL NORTE ADDITION,** zoned R-1, located on ESPANOLA NE, between COPPER NE and GIRARD NE containing approximately 1 acre(s). (K-19) **PRELIMINARY PLAT WAS APPROVED WITH FINAL SIGN OFF DELEGATED TO PLANNING FOR AGIS DXF FILE.**

25. Project # 1003629
05DRB-01008 Minor-Prelim&Final Plat Approval

ARMIJO SURVEYING agent(s) for DONALD VASQUEZ request(s) the above action(s) for all or a portion of Lot(s) 1, **PARKSITO SUBDIVISION,** zoned R-D, located on 97TH ST SW, between FIRMAN CT SW and SAN YGNACIO RD SW containing approximately 1 acre(s). [REF: DRB-96-529, S-98-83, S-97-55] (L-9) **PRELIMINARY PLAT APPROVED WITH FINAL SIGN OFF DELEGATED TO PLANNING FOR AGIS DXF FILE.**

26. Project # 1004261
05DRB-00988 Minor-Prelim&Final Plat Approval

SURVEYS SOUTHWEST LTD agent(s) for MATT SMITH request(s) the above action(s) for all or a portion of Tract(s) A, **LANDS OF W. D. KING & C. D. KING,** and Tract(s) 140, **M.R.G.C.D. MAP 38,** zoned SU-2, located on CENTRAL AVE SW, between SAN PASQUALE AVE SW and CHACOMA PL SW containing approximately 1 acre(s). [REF: LUC-9-25, LUC-98-7, LUC-95-31, LUC-94-1] (J-13) **PRELIMINARY PLAT WAS APPROVED WITH FINAL SIGN OFF DELEGATED TO TRANSPORTATION DEVELOPMENT FOR DEDICATION ALONG SAN PASQUALE AND PLANNING FOR AGIS DXF FILE.**

27. Project # 1003554
05DRB-00530 Minor- Final Plat Approval

TIERRA WEST LLC agent(s) for AMC DEVELOPMENT INC request(s) the above action(s) for all or a portion of Lot(s) 1-8, Block(s) 9 and Lot(s) 2-9, Block(s) 8, SKYLINE HEIGHTS, (to be known as **CENTRAL PARK PLACE, PHASE 1)** zoned C-2, located on CENTRAL AVE SE, between CONCHAS ST SE and EUBANK BLVD SE containing approximately 4 acre(s). [REF: ZA-88-406, 04DRB01099, 04DRB01100] *[Deferred from 4/6/05 and 4/20/05 FINAL PLAT WAS INDEF DEFERRED FOR SIA]* (L-20) **FINAL PLAT WAS APPROVED WITH FINAL SIGN OFF DELEGATED TO PLANNING FOR PLAT RECORDING.**

NO ACTION IS TAKEN ON THESE CASES:
APPLICANT - AGENT IS REQUIRED TO BE AT THE MEETING

28. Project # 1000696
05DRB-00977 Minor-Sketch Plat or Plan

MARK GOODWIN & ASSOCIATES agent(s) for ICDC LLC request(s) the above action(s) for all or a portion of Tract(s) C, LEE'S BOSQUE SUBDIVISION (to be known as **BOSQUECITO SUBDIVISION**) zoned R-D residential and related uses zone, developing area, located on COORS BLVD NW, between EAGLE RANCH RD NW and LA ORILLA RD NW containing approximately 7 acre(s). (D-12) **THE ABOVE REQUEST WAS REVIEWED AND COMMENTS WERE GIVEN.**

29. Project # 1004258
05DRB-00984 Minor-Sketch Plat or Plan

KIMBERLY A. KIEGEL request(s) the above action(s) for all or a portion of Lot(s) 27 & 28, Block(s) 32, **MONTEREY HILLS ADDITION, UNIT 2,** zoned R-1, located on SAN RAFAEL SE, between GIRARD SE and RICHMOND SE containing approximately 1 acre(s).(L-16) **THE ABOVE REQUEST WAS REVIEWED AND COMMENTS WERE GIVEN.**

30. **Project # 1004232**
05DRB-00991 Minor-Sketch Plat or Plan

MIGUEL TRUJILLO agent(s) for WILLIAM K WILSON, request(s) the above action(s) for all or a portion of Tract(s) A, Block(s) 13, **CLAYTON HEIGHTS,** zoned C-2, located on GIBSON BLVD SE, between BUENA VISTA SE and WILMOORE DR SE containing approximately 2 acre(s). [Was issued Project #1004262 in error.] (L-15) **THE ABOVE REQUEST WAS REVIEWED AND COMMENTS WERE GIVEN.**

31. **Project # 1004267**
05DRB-01019 Minor-Sketch Plat or Plan

GARY MIRABAL request(s) the above action(s) for all or a portion of Tract(s) 1, LANDS OF MANUEL GONZALES (to be known as **VILLA PLAZA VIEJA)** zoned RA-2 residential and agricultural zone, located on MOUNTAIN RD NW, between MONTOYA RD NW and CENTRAL AVE NW containing approximately 2 acre(s). [REF: DRB-97-247] (J-12) **THE ABOVE REQUEST WAS REVIEWED AND COMMENTS WERE GIVEN.**

32. **Project # 1004240**
05DRB-00918 Minor-Sketch Plat or Plan

SCHARLES WILDER agent(s) for ED GARCIA request(s) the above action(s) for all or a portion of Tract(s) 87A2, 87B1, 87B2, 87B3, 88, 89A, A2 and A1, **MAES-ERNEST,** zoned R-1 residential zone, located on RIO GRANDE BLVD NW, between INDIAN SCHOOL RD NW and MEADOW VIEW RD NW containing approximately 3 acre(s). *[Deferred from 6/15/05]* (H-13) **THE ABOVE REQUEST WAS REVIEWED AND COMMENTS WERE GIVEN.**

33. Approval of the Development Review Board Minutes for June 8, 2005. **DRB MINUTES FOR JUNE 8, 2005 WERE APPROVED.**

ADJOURNED: 12:55 P.M.

#16

3429

DXF Electronic Approval Form

DRB Project Case #: 1003429

Subdivision Name: SIERRA RANCH UNIT 1

Surveyor: TIMOTHY ALDRICH

Contact Person: STEPHANIE STRATTON

Contact Information: 798-7965

DXF Received: 6/14/2005 Hard Copy Received: 6/14/2005

Coordinate System: Ground rotated to NMSP Grid

Approved

06-14-2005

Date

* The DXF file cannot be accepted (at this time) for the following reason(s):

AGIS Use Only

Copied fc **3429** to agiscov on **6/14/2005** Contact person notified on **6/14/2005**

#8

Completed 2/3/05

DRB CASE ACTION LOG (PREL & FINAL)

REVISED 2/5/04

This sheet must accompany your plat or site plan to obtain delegated signatures. Return sheet with site plan/plat once comments are addressed.

DRB Application No.: **04DRB-01892 (P&F)** Project # **1003429**

Project Name: **EL RANCHO GRANDE 14**

Agent: Aldrich Land Surveying Phone No.: 884-1990

Your request for (**SDP for SUB), (SDP for BP), (FINAL PLATS), (MASTER DEVELOP. PLAN),** was approved on 1/5/05 by the DRB with delegation of signature(s) to the following departments.

OUTSTANDING SIGNATURES COMMENTS TO BE ADDRESSED

- ☐ TRANSPORTATION: _____
- ☐ _____
- ☐ _____
- ☐ _____
- ☐ _____

- ☐ UTILITIES: _____
- ☐ _____
- ☐ _____
- ☐ _____

- ☒ CITY ENGINEER / AMAFCA: AMAFCA's sig OK 1-20-05
- ☐ _____
- ☐ _____
- ☐ _____

- ☐ PARKS / CIP: _____
- ☐ _____
- ☐ _____
- ☐ _____

- ☒ PLANNING (Last to sign): 15 day appeal period
- ☐ _____ - Notice of Subdivision Plat
- ☐ _____ OK 1/27/05 Revisions
- ☐ _____

- ☒ **Planning must record this plat. Please submit the following items:**
  - -The original plat and a mylar copy for the County Clerk.
  - -Tax certificate from the County Treasurer.
  - -Recording fee (checks payable to the County Clerk). RECORDED DATE: _____
  - -Tax printout from the County Assessor.
- ☐ **Include 3 copies of the approved site plan along with the originals.**
- ☐ **County Treasurer's signature must be obtained prior to the recording of the plat with the County Clerk.**
- ☐ **Property Management's signature must be obtained prior to Planning Department's signature.**
- ☒ **AGIS DXF File approval required.** OKAY
- ☐ **Copy of recorded plat for Planning.**

Project Number 1003429

#3

completed 1-28-05 CS

DRB CASE ACTION LOG (SITE PLAN SUBD.)

REVISED 2/5/04

This sheet must accompany your plat or site plan to obtain delegated signatures. Return sheet with site plan/plat once comments are addressed.

DRB Application No.: **04DRB-00090 (SPS)**	Project # **1003429**
Project Name: **SIERRA RANCH SUBD.**	
Agent: Bohannan Huston Inc.	Phone No.: 823-1000

Your request for ~~(SDP for SUB), (SDP for BP), (FINAL PLATS), (MASTER DEVELOP. PLAN),~~ was approved on 1/26/05 by the DRB with delegation of signature(s) to the following departments.

OUTSTANDING SIGNATURES COMMENTS TO BE ADDRESSED

- ❑ TRANSPORTATION: _____
- ❑ _____
- ❑ _____
- ❑ _____
- ❑ _____

- ❑ UTILITIES: _____
- ❑ _____
- ❑ _____
- ❑ _____

- ❑ CITY ENGINEER / AMAFCA: _____
- ❑ _____
- ❑ _____
- ❑ _____

- ❑ PARKS / CIP: _____
- ❑ _____
- ❑ _____
- ❑ _____

- ❑ PLANNING (Last to sign): _____
- ❑ _____
- ❑ _____

- ❑ **Planning must record this plat. Please submit the following items:**
  - -The original plat and a mylar copy for the County Clerk.
  - -Tax certificate from the County Treasurer.
  - -Recording fee (checks payable to the County Clerk). RECORDED DATE: _____
  - -Tax printout from the County Assessor.
  - ❑ **Include 3 copies of the approved site plan ~~along with the originals~~.**
  - ❑ **County Treasurer's signature must be obtained prior to the recording of the plat with the County Clerk.**
  - ❑ **Property Management's signature must be obtained prior to Planning Department's signature.**
  - ❑ **AGIS DXF File approval required.**
  - ❑ **Copy of recorded plat for Planning.**

Project Number 1003429

#3

DRB CASE ACTION LOG (SITE PLAN SUBD.)

REVISED 2/5/04

This sheet must accompany your plat or site plan to obtain delegated signatures. Return sheet with site plan/plat once comments are addressed.

DRB Application No.: **04DRB-00090 (SPS)** Project # **1003429**

Project Name: **SIERRA RANCH SUBD.**

Agent: Bohannan Huston Inc. Phone No.: 823-1000

Your request for ~~(SDP for SUB)~~ **(SDP for BP), (FINAL PLATS), (MASTER DEVELOP. PLAN),** was approved on 1/26/05 by the DRB with delegation of signature(s) to the following departments.

OUTSTANDING SIGNATURES COMMENTS TO BE ADDRESSED

- ☐ TRANSPORTATION: _____
- ☐ _____
- ☐ _____
- ☐ _____
- ☐ _____

- ☐ UTILITIES: _____
- ☐ _____
- ☐ _____
- ☐ _____

- ☐ CITY ENGINEER / AMAFCA: _____
- ☐ _____
- ☐ _____
- ☐ _____

- ☐ PARKS / CIP: _____
- ☐ _____
- ☐ _____
- ☐ _____

- ☐ PLANNING (Last to sign): _____
- ☐ _____
- ☐ _____
- ☐ _____

- ☐ **Planning must record this plat. Please submit the following items:**
  - -The original plat and a mylar copy for the County Clerk.
  - -Tax certificate from the County Treasurer.
  - -Recording fee (checks payable to the County Clerk). RECORDED DATE: _____
  - -Tax printout from the ~~County~~ Assessor.
- ☐ **Include 3 copies of the approved site plan ~~also~~ ~~with the originals~~.**
- ☐ **~~County~~ Treasurer's signature must be obtained prior to the recording of the plat with the County Clerk.**
- ☐ **Property Management's signature must be obtained prior to Planning Department's signature.**
- ☐ **AGIS DXF File approval required.**
- ☐ **Copy of recorded plat for Planning.**

Project Number 1003429

OFFICIAL NOTICE OF DECISION

CITY OF ALBUQUERQUE
PLANNING DEPARTMENT
DEVELOPMENT REVIEW BOARD January 26, 2005

3. Project # 1003429
04DRB-01950 Major-Preliminary Plat Approval
04DRB-01951 Major-Vacation of Pub Right-of-Way
04DRB-01952 Major-Vacation of Public Easements
04DRB-01953 Minor-Sidewalk Waiver
04DRB-01954 Minor-Temp Defer SDWK

BOHANNAN HUSTON INC agent(s) for CURB INC request(s) the above action(s) for all or a portion of Tract(s) 16B & 16C EL RANCHO GRANDE, (to be known as **SIERRA RANCH SUBDIVISION,** zoned R-LT & RD, located on GIBSON BLVD SW, between MESSINA SW and GIBSON SW containing approximately 62 acre(s). [REF: 04DRB-01891, 04DRB00717] *[Deferred from 1/12/05]* (N-8)

At the January 26, 2005, Development Review Board meeting, with the signing of the infrastructure list dated 1/26/05 and approval of the grading plan engineer stamp dated 1/25/05 the preliminary plat was approved with the following conditions of final plat:

The AMAFCA Board shall vacate the easements prior to final plat approval.

The final plat needs to have the signature of the Home Owner's Association president.

Add a maintenance and beneficiary note to the plat regarding the pedestrian easements.

The vacations were approved as shown on Exhibit B in the Planning file, subject to these findings and conditions:

FINDINGS:

1. The public welfare is in no way served by retaining the rights-of-way and/or easements.

2. There is no convincing evidence that any substantial property right is being abridged against the will of the owner of the right.

CONDITIONS:

1. Final disposition shall be through the City Real Estate Office.

2. The vacated property shall be shown on a replat approved by the Development Review Board and the approved replat shall be filed for record with the Bernalillo County Clerk's Office within one year.

A sidewalk variance for waiver of sidewalks was approved as shown on Exhibit C in the Planning file. The temporary deferral of construction of sidewalks was approved as shown on Exhibit C in the Planning file.

05DRB-00090 Minor-SiteDev Plan Subd

BOHANNAN HUSTON INC agent(s) for CURB INC request(s) the above action(s) for all or a portion of Tract(s) 16B &16C, EL RANCHO GRANDE, (to be known as **SIERRA RANCH SUBDIVISION)** zoned R-LT & RD, located on GIBSON BLVD SW, between MESSINA SW and **GIBSON SW** containing approximately 62 acre(s). [REF: 04DRB01891, 04DRB00717] (N-8)

The site plan for subdivision was approved and signed off by the Board.

If you wish to appeal this decision, you must do so by February 10, 2005, in the manner described below.

Appeal is to the Environmental Planning Commission. Any person aggrieved with any determination of the Development Review Board may file an appeal on the Planning Department form, to the Planning Department, within 15 days of the Development Review Board's decision. The date the determination in question is issued is not included in the 15-day period for filing an appeal. If the fifteenth day falls on a Saturday, Sunday or holiday as listed in the Merit System Ordinance, the next working day is considered as the deadline for filing the appeal. Such appeal shall be heard within 60 days of its filing.

You will receive notice if any other person files an appeal. Successful applicants are reminded that other requirements of the City must be complied with, even after approval of the referenced application(s).

Please note that a Preliminary Plat approval date is the date of the DRB action plus the 15-day appeal period. The Preliminary Plat approval is effective one year from that date. The DRB must take action on the Preliminary Plat Extension prior to the expiration of the approval or the Preliminary Plat approval is null and void. (REF: Chapter 14 Article 14 Part 3-4 (E) Revised Ordinance.)

Please note that the vacation of all plats, rights-of-way, and easements are void after one year from the final appeal date referenced above if all conditions are not met (The effective date of Development Review Board approval is the hearing date plus the 15-day appeal period.) (REF: Chapter 14 Article 14 Part 7-2 (E)(3)(6) Revised Ordinance.)

Sheran Matson, AICP, DRB Chair

Cc:Curb Inc., 5160 San Francisco NE, 87109
Bohannan Huston Inc., 7500 Jefferson NE, 87109
Marilyn Maldonado, Planning Department, 4th Floor, Plaza del Sol Bldg.
Scott Howell, Property Management, Legal Dept./4th Flr, City/County Bldg
File

CITY OF ALBUQUERQUE

PLANNING DEPARTMENT
DEVELOPMENT AND BUILDING SERVICES
HYDROLOGY DEVELOPMENT SECTION

DEVELOPMENT REVIEW BOARD--SPEED MEMO

DRB CASE NO/PROJECT NO: 1003429 **AGENDA ITEM NO: 3**

SUBJECT:

(01) Sketch Plat/Plan	(05) Site Plan for Subd	(10) Sector Dev Plan
(02) Bulk Land Variance	(06) Site Plan for BP	(11) Grading Plan
(03) Sidewalk Variance	(07) Vacation	(12) SIA Extension
(03a) Sidewalk Deferral	(08) Final Plat	(13) Master Dev. Plan
(04) Preliminary Plat	(09) Infrastructure List	(14) Cost Allocation Plan

ACTION REQUESTED:

REV/CMT:() APP:(x) SIGN-OFF:() EXTN:() AMEND:()

ENGINEERING COMMENTS:

An approved drainage report dated 1-25-05 is on file for Preliminary Plat approval.
Comments on the infrastructure list.
No objection to the vacation request

RESOLUTION: signed I.L.

APPROVED X; DENIED ____; DEFERRED ____; COMMENTS PROVIDED ___; WITHDRAWN

SIGNED-OFF: (SEC-PLN) (SP-SUB) (SP-BP) (FP) BY: (UD) (CE) (TRANS) (PKS) (PLNG)

DELEGATED: (SEC-PLN) (SP-SUB) (SP-BP) (FP) TO: (UD) (CE) (TRANS) (PKS) (PLNG)

FOR:

SIGNED: Bradley L. Bingham
City Engineer/AMAFCA Designee

DATE: January 26, 2005

P.O. Box 1293
Albuquerque
New Mexico 87103
www.cabq.gov

DRB PUBLIC HEARING SIGN IN SHEETS

CASE NUMBER: 1003429 AGENDA#: 3 DATE: 1-26-05

1. Name: Scott Steffen Address: CYI 7500 Jefferson NE Alb NM Zip: 87109
2. Name: Bo Johnson Address: Curb Inc Zip: _____
3. Name: _____ Address: _____ Zip: _____
4. Name: _____ Address: _____ Zip: _____
5. Name: _____ Address: _____ Zip: _____
6. Name: _____ Address: _____ Zip: _____
7. Name: _____ Address: _____ Zip: _____
8. Name: _____ Address: _____ Zip: _____
9. Name: _____ Address: _____ Zip: _____
10. Name: _____ Address: _____ Zip: _____
11. Name: _____ Address: _____ Zip: _____
12. Name: _____ Address: _____ Zip: _____
13. Name: _____ Address: _____ Zip: _____
14. Name: _____ Address: _____ Zip: _____

DEVELOPMENT REVIEW BOARD
ACTION SHEET
Plaza del Sol Hearing Room, Basement, Plaza del Sol Building

January 12, 2005 9:00 a.m.

MEMBERS:

Sheran Matson, AICP, DRB Chair
Claire Senova, Administrative Assistant

Wilfred Gallegos, Transportation Development
Brad Bingham, Alternate City Engineer
Roger Green, Utility Development
Christina Sandoval, Parks & Recreation

****

NOTE: UNLESS ANNOUNCED DURING THE MEETING, THE DEVELOPMENT REVIEW BOARD WILL NOT TAKE A LUNCH BREAK.

NOTE: INDIVIDUALS WITH DISABILITIES WHO NEED SPECIAL ASSISTANCE TO PARTICIPATE AT THIS MEETING SHOULD CONTACT CLAIRE SENOVA, PLANNING DEPARTMENT, AT 924-3946. HEARING IMPAIRED USERS MAY CONTACT HER VIA THE NEW MEXICO RELAY NETWORK BY CALLING TOLL-FREE:1-800-659-8331.

NOTE: REQUESTS FOR DEFERRAL OF CASES WILL BE DISCUSSED BY THE BOARD AND THE APPLICANT AND/OR AGENT AT THE BEGINNING OF THE AGENDA. BOTH PARTIES MUST AGREE UPON THE DATE OF DEFERRAL. IF THE APPLICANT/AGENT IS NOT PRESENT, THE ADMINISTRATIVE ASSISTANT MUST RECEIVE A LETTER, PRIOR TO THE HEARING DATE, REQUESTING A SPECIFIC DEFERRAL DATE. THE BOARD WILL DISCUSS AND MAKE A DECISION AT THE HEARING. THE APPLICANT/AGENT WILL THEN BE INFORMED OF THE DEFERRAL DATE AND REASON.

A. Call to Order: 9:00 A.M. Adjourned: NOON
B. Changes and/or Additions to the Agenda
C. New or Old Business

CASES WHICH REQUIRE PUBLIC NOTIFICATION
MAJOR SUBDIVISIONS, VACATIONS, SIA EXTENSIONS AND SITE DEVELOPMENT PLANS

1. **Project # 1003520**
   04DRB-01567 Major-Preliminary Plat Approval
   04DRB-01568 Minor-Temp Defer SDWK
   04DRB-01863 Minor-Subd Design (DPM) Variance

MARK GOODWIN & ASSOCIATES PA agent(s) for WASHINGTON STREET INVESTORS LLC request(s) the above action(s) for all or a portion of Lot(s) 27 & 28, Block(s) 16, Tract(s) 1, NORTH ALBUQUERQUE ACRES UNIT 3 (to be known as **BENJAMIN PLACE SUBDIVISION**) zoned R-D, located on GLENDALE AVE NE, between BARSTOW ST NE and VENTURA ST NE containing approximately 2 acre(s). [REF: 04DRB00999] *[Deferred from 11/3/04, 12/1/04,12/15/04 & 1/5/05]* 04DRB-1570 WAS WITHDRAWN. (B-20) **WITH THE SIGNING OF THE INFRASTRUCTURE LIST DATED 1/12/05 AND APPROVAL OF THE GRADING PLAN ENGINEER STAMP DATED 12/29/04 THE PRELIMINARY PLAT WAS APPROVED WITH A CONDITION OF FINAL PLAT: AN APPROVED PERIMETER WALL DESIGN MUST OCCUR BEFORE FINAL PLAT APPROVAL. THE TEMPORARY DEFERRAL OF CONSTRUCTION OF SIDEWALKS ON THE INTERIOR STREETS WAS APPROVED AS SHOWN ON EXHIBIT C IN THE PLANNING FILE. A SIDEWALK VARIANCE FROM DESIGN STANDARDS WAS APPROVED AS SHOWN ON EXHIBIT C IN THE PLANNING FILE FOR NON-PLACEMENT OF SIDEWALKS WHICH WILL NOT PRECLUDE ANY FUTURE PROJECT FROM CONSTRUCTING SIDEWALK LATER.**

2. **Project # 1002384**
   04DRB-01942 Major-Two Year SIA

BOHANNAN HUSTON INC agent(s) for D R HORTON HOMES request(s) the above action(s) for all or a portion of Tract(s) 4, COORS VILLAGE, (to be known as **RANCHO ENCANTADO DEL SUR,** zoned SU-3, located on COORS BLVD NW, between ATRISCO BLVD NW and MILNE RD NW containing approximately 20 acre(s). [REF: 03DRB01369] (F-11) **A ONE-YEAR EXTENSION OF THE SIA WAS APPROVED.**

3. **Project # 1003429**
04DRB-01950 Major-Preliminary Plat Approval
04DRB-01951 Major-Vacation of Pub Right-of-Way
04DRB-01952 Major-Vacation of Public Easements
04DRB-01953 Minor-Sidewalk Waiver
04DRB-01954 Minor-Temp Defer SDWK

BOHANNAN HUSTON INC agent(s) for CURB INC request(s) the above action(s) for all or a portion of Tract(s) 16B & 16C EL RANCHO GRANDE, (to be known as **SIERRA RANCH SUBDIVISION,** zoned R-LT & RD, located on GIBSON BLVD SW, between MESSINA SW and GIBSON SW containing approximately 62 acre(s). [REF: 04DRB-01891, 04DRB00717] *[Deferred from 1/12/05]* (N-8) **DEFERRED AT THE AGENT'S REQUEST TO 1/26/05.**

4. **Project # 1003471**
04DRB-01948 Major-Amnd Prelim Plat Approval
04DRB-01949 Minor-Temp Defer SDWK

SURV TEK INC agent(s) for CURB WEST INC request(s) the above action(s) for all or a portion of Tract(s) B-2-A, PARADISE HEIGHTS (to be known as **SEVILLE SUBDIVISION, UNIT 3A**), zoned R-1, located on KAYENTA BLVD NW north of SEQUOIA AVE NW containing approximately 24 acre(s). [REF: 02DRB01791, 02DRB01250, 04DRB00826, 04DRB00827, 04DRB01224, 04DRB01225] (A-10) **THE AMENDED INFRASTRUCTURE LIST DATED 1/12/05 WAS APPROVED. THE AMENDED GRADING PLAN ENGINEER STAMP DATED 12/16/04 WAS APPROVED. THE AMENDED PRELIMINARY PLAT WAS APPROVED. THIS AMENDMENT DOES NOT EXTEND THE EXPIRATION DATE OF THE ALREADY APPROVED PRELIMINARY PLAT. THE TEMPORARY DEFERRAL OF CONSTRUCTION OF SIDEWALKS ON THE INTERIOR STREETS WAS APPROVED A SHOWN ON EXHIBIT C IN THE PLANNING FILE.**

5. **Project # 1003172**
04DRB-01955 Major-Preliminary Plat Approval
04DRB-01957 Minor-Temp Defer SDWK

TIERRA WEST LLC agent(s) for AMC DEVELOPMENT SERVICES request(s) the above action(s) for all or a portion of Tract(s) 1D, SEVILLE (to be known as **SEVILLE SUBDIVISION, UNIT 9,** zoned R-LT, located on KAYENTA ST NW, between IRVING BLVD NW and CALABACILLAS ARROYO containing approximately 8 acre(s). [REF: 04DRB00529] (A-10) **WITH THE SIGNING OF THE INFRASTRUCTURE LIST DATED 1/12/05 AND APPROVAL OF THE GRADING PLAN ENGINEER STAMP DATED 12/16/04 THE PRELIMINARY PLAT WAS APPROVED WITH CONDITIONS: TO REEVALUATE THE LOCATION OF PYRENEES CT AND IRVING BLVD., TO SHOW THE 20-FOOT PEDESTRIAN EASEMENT ON THE FINAL PLAT AND TO GRANT THE 20-FOOT PUBLIC SANITARY SEWER EASEMENT TO THE CITY OF ALBUQUERQUE AS WELL AS NEW MEXICO UTILITIES INC. THE TEMPORARY DEFERRAL OF CONSTRUCTION OF SIDEWALKS ON THE INTERIOR STREETS WAS APPROVED AS SHOWN ON EXHIBIT C IN THE PLANNING FILE.**

6. **Project # 1002194**
04DRB-01915 Major-Preliminary Plat Approval

GREATER ALBUQUERQUE HOUSING PARTNERSHIP request(s) the above action(s) for all or a portion of Tract(s) 2, **SUNPORT LODGINGS ADDITION,** zoned R-2, located on WELLESLEY SE, between CARLISLE SE and GIBSON SE containing approximately 2 acre(s). [REF: 03DRB01778, 03DRB00537, 04DRB01836] (L-16) **WITH THE SIGNING OF THE INFRASTRUCTURE LIST DATED 1/112/05 AND APPROVAL OF THE GRADING PLAN ENGINEER STAMP DATED 9/8/03 THE PRELIMINARY PLAT WAS APPROVED.**

04DRB-01836 Minor-Final Plat Approval

GREATER ALBUQUERQUE HOUSING PARTNERSHIP request(s) the above action(s) for all or a portion of Tract(s) 2, **SUNPORT LODGING ADDITION,** zoned R-2, located on WELLESLEY SE, between CARLISLE SE and GIBSON SE containing approximately 2 acre(s). [REF: 04DRB01778] *[Deferred from 12/15/04]* (L-16) **THE FINAL PLAT WAS APPROVED AND SIGNED OFF BY THE BOARD.**

7. **Project # 1003585**
04DRB-01958 Major-Preliminary Plat Approval

RIO GRANDE ENGINEERING agent(s) for PHILLIP RABY request(s) the above action(s) for all or a portion of Lot(s) 1, 2, 3 and 4, Block(s) 4, GRANADA HEIGHTS ADDITION, (to be known as **TOWNHOMES @ MASONS LANDING,** zoned O-R, located on SILVER AVE SE, between ALISO AVE SE and MORNINGSIDE AVE SE containing approximately 2 acre(s). [REF: 04DRB01168] (K-17) **DEFERRED AT THE AGENT'S REQUEST TO 2/9/05.**

8. **Project # 1002134**
04DRB-01804 Major-Preliminary Plat Approval

MARK GOODWIN & ASSOCIATES, PA agent(s) for VISTA DEL NORTE DEVELOPMENT LLC request(s) the above action(s) for all or a portion of Tract(s) U-2, U-3, U-4 and U-6, **VISTA DEL NORTE SUBDIVISION,** zoned SU-1 FOR IP, located on PASEO DEL NORTE NE, between EDITH BLVD NE and NORTH DIVERSION CHANNEL containing approximately 30 acre(s). [REF: DRB-94-288, Z-87-113, 02DRB01196,02DRB01199]*[Deferred from 12/29/04 & 1/12/05]* (D-16) **DEFERRED AT THE AGENT'S REQUEST TO 1/25/05.**

04DRB-01967 Minor-SiteDev Plan Subd/EPC

MARK GOODWIN & ASSOCIATES agent(s) for VISTA DEL NORTE DEVELOPMENT LLC request(s) the above action(s) for all or a portion of Tract(s) U-2, U-3, U-4 and U-6, **VISTA DEL NORTE SUBDIVISION,** zoned SU-1 special use zone, located on LAS LOMITAS DR NW, between EL PUEBLO RD NW and VISTA DEL NORTE NW containing approximately 31 acre(s). [REF: Z-87-113, DRB-94-288, 02DRB01196, 02DRB01199, 04DRB01804, 04DRB00794] **[Elvira Lopez, EPC Case Planner]** *[Deferred from 12/29/04 & 1/12/05]* (D-16) **DEFERRED AT THE AGENT'S REQUEST TO 1/25/05.**

9. **Project # 1003470**
04DRB-01522 Major-Bulk Land Variance
04DRB-01523 Major-Preliminary Plat Approval
04DRB-01524 Minor-Temp Defer SDWK

WILSON & COMPANY agent(s) for SCOTT SCHIABOR SPS LC request(s) the above action(s) for all or a portion of Tract(s) 1A, 2A, 1B & 2B, **VISTA VIEJA SUBDIVISION,** KASSUBA-MONTBEL LANDS, zoned R-1 residential zone, located on 81ST ST NW and ALBERICOQUE PL NW containing approximately 152 acre(s). [REF: 04DRB00825, 04DRB01460] *[Deferred from 11/3/04, 11/10/04 & 12/1/04 & 1/12/05]* (D-9) **DEFERRED AT THE AGENT'S REQUEST TO 2/16/05.**

10. **Project # 1003369**
04DRB-00514 Major-Drainage Plan to Determine the Cost Allocation for Storm Drainage Improvements

BOB KEERAN agent(s) for LLAVE CONSTRUCTION INC request(s) these action(s) for all or a portion of Unit(s) 3, Lot(s) 6 & 7, Tract(s) 3, Block(s) 16, NORTH ALBUQUERQUE ACRES, **VINTNER COURT SUBDIVISION,** zoned DETENTION POND, located on VINTNER NE, between VENTURA NE and CORONA NE containing approximately 2 acre(s). *[Deferred from 5/12/04, 5/26/04, 6/9/04, 6/23/04, 7/14/04, 7/21/04, 8/11/04, 8/25/04,9/8/04,10/6/04 & 11/3/04 & 1/12/05]* (C-20) **DEFERRED AT THE AGENT'S REQUEST TO 2/9/05.**

11. **Project # 1003757**
04DRB-01688 Major-Vacation of Pub Right-of-Way

ISAACSON & ARFMAN PA agent(s) for DEAN FOODS, DBA CREAMLAND DAIRIES request(s) the above action(s) for **ALVARADO ADDITION,** located on HAINES NW, between 2ND ST NW and 3RD ST NW containing approximately 1 acre(s). [REF: V-89-87, DRB 89-490] *[Deferred from 12/1/04, 12/15/04 & 1/12/05]* (H-14) **DEFERRED AT THE AGENT'S REQUEST TO 2/9/05.**

12. **Project # 1002051**
03DRB-02008 Major-Preliminary Plat Approval
03DRB-02009 Major-Vacation of Public Easements
03DRB-02010 Minor-Vacation of Private Easements
03DRB-02011 Minor-Temp Defer SDWK

TIERRA WEST LLC agent(s) for GELTMORE LAND LTD CO request(s) the above action(s) for all or a portion of Tract(s) A, **CHAMISA RIDGE - UNIT 1,** zoned R-LT, located on PARADISE BLVD NW, between BIG SAGE DR NW and CONEFLOWER DR NW containing approximately 18 acre(s). *[Deferred from 6/9/04, 6/23/04,8/4/04,9/29/04, Indefinitely Deferred on 11/10/04, 12/8/04 & 1/5/05]* [REF:02DRB-00963](B-10) **WITH THE SIGNING OF THE INFRASTRUCTURE LIST DATED 1/12/05 AND APPROVAL OF THE GRADING PLAN ENGINEER STAMP DATED 12/15/04 THE PRELIMINARY PLAT WAS APPROVED. THE VACATIONS WERE APPROVED AS SHOWN ON EXHIBIT B IN THE PLANNING FILE. THE TEMPORARY DEFERRAL OF CONSTRUCTION OF SIDEWALKS ON THE INTERIOR STREETS WAS APPROVED AS SHOWN ON EXHIBIT C IN THE PLANNING FILE.**

SITE DEVELOPMENT PLANS, AMENDED PLANS, AND MASTER DEVELOPMENT PLANS

NOTE: IF THE APPLICANT/AGENT IS NOT PRESENT WHEN THEIR REQUEST IS CALLED, THE REQUEST MAY BE INDEFINITELY DEFERRED.

13. **Project # 1000816**
05DRB-00005 Minor-SiteDev Plan Bld/Permit/EPC

TAFAZZUL HUSSAIN agent(s) for ALEEM & FAIZEL KASSAM request(s) the above action(s) for all or a portion of Block(s) 4B, Tract(s) 1A, **SUNPORT PARK,** zoned IP, located on UNIVERSITY BLVD SE, between SUNPORT BLVD SE and WOODWARD RD SE containing approximately 3 acre(s). [REF: 04EPC00293] **[Chris Hyer, EPC Case Planner]** *[Deferred from 1/12/05]* (M-15) **DEFERRED AT THE AGENT'S REQUEST TO 1/19/05.**

MINOR PLATS, FINAL (MAJOR) PLATS, AMENDED PLATS AND PLANS

14. **Project # 1003784**
05DRB-00007 Minor-Prelim&Final Plat Approval

SURVEYS SOUTHWEST LTD agent(s) for JESUS ESPINOZA request(s) the above action(s) for all or a 50-foot portion of **VACATED ALAMEDA LATERAL,** zoned lateral, located on PROSPECT AVE NE, between BROADWAY BLVD NE and CUTLER AVE NE containing approximately 1 acre(s). [REF: 04EPC01776] (H-15) **THE PRELIMINARY AND FINAL PLAT WERE APPROVED AND SIGNED OFF BY THE BOARD.**

15. **Project # 1003796**
04DRB-01990 Minor-Prelim&Final Plat Approval

PATRICK J GRIFFIN request(s) the above action(s) for all or a portion of Lot(s) 79, Block(s) 11, **SKYVIEW WEST ADDITION,** zoned R-1, located on GWIN RD SW, between UNSER BLVD SW and GASLIGHT SW containing approximately 1 acre(s). [REF: 04DRB01807] (K-10) **THE PRELIMINARY PLAT WAS APPROVED WITH FINAL SIGN OFF DELEGATED TO PLANNING FOR REAL PROPERTY'S SIGNATURE.**

16. **Project # 1002727**
05DRB-00010 Minor-Prelim&Final Plat Approval

DAC ENTERPRISES INC agent(s) for PEGGY DASKALOS-LYCOU request(s) the above action(s) for all or a portion of Tract(s) A, Lot(s) 6-10, Block(s) 105, **BEL AIR SUBDIVISION,** zoned C-2, located on MENAUL BLVD NE, between ALVARADO DR NE and PALOMAS DR NE containing approximately 1 acre(s). [REF: 04ZHE00955] (H-18) **THE PRELIMINARY PLAT WAS APPROVED WITH FINAL SIGN OFF DELEGATED TO TRANSPORTATION DEVELOPMENT FOR POSSIBLE RADII DEDICATIONS AND TO PLANNING FOR AGIS DXF FILE.**

17. **Project # 1003695**
05DRB-00008 Minor-Prelim&Final Plat Approval

HALL SURVEYING CO agent(s) for A BAIN COCHRAN III request(s) the above action(s) for all or a portion of Lot(s) 4 (west 63 feet), Block(s) 12, **ALBUQUERQUE HIGHLANDS,** zoned R-1, located on LA VETA NE, between SAN MATEO NE and MOUNTAIN RD NE containing approximately 1 acre(s). [REF:04DRB-1404] (J-18) **INDEFINITELY DEFERRED AT THE AGENT'S REQUEST.**

18. **Project # 1003673**
04DRB-01637 Minor-Final Plat Approval

RIO GRANDE ENGINEERING agent(s) for ERIMY PROPERTIES LTD request(s) the above action(s) for all or a portion of Lot(s) 7, 8 and 9, Block(s) 3, NORTH ALBUQUERQUE ACRES, UNIT 3, (to be known as **OAKLAND SOUTH SUBDIVISION**) zoned RD, located on OAKLAND AVE NE, between VENTURA BLVD NE and BARSTOW BLVD NE containing approximately 3 acre(s). [REF: 04DRB01424] *[Deferred from 10/27/04 & 11/3/04, [11/10/04 NEITHER THE APPLICANT NOR THE AGENT WERE PRESENT DEFERRED TO 11/17/04, Final Plat Indef Deferred for SIA.]* (C-20) **FINAL PLAT WAS APPROVED WITH FINAL SIGNOFF DELEGATED TO CITY ENGINEER FOR SIA, AMAFCA'S SIGNATURE AND NEEDED EASEMENTS AND TO PLANNING FOR THE AGIS DXF FILE.**

19. **Project # 1003604**
04DRB-01794 Minor-Final Plat Approval

ABQ ENGINEERING agent(s) for D T LAND DEVELOPMENT request(s) the above action(s) for all or a portion of Tract(s) 217, 218, 219 and 220, **MIRA MESA SUBDIVISION,** zoned R-2 residential zone, located on HANOVER RD NW, between GLENRIO RD NW and 68TH ST NW containing approximately 13 acre(s). [REF 04DRB01233, 04DRB01452, 04DRB01453] *[Deferred from 12/1/04, 12/8/04 & 1/5/05]* (J-10) **THE FINAL PLAT WAS APPROVED WITH THE FOLLOWING CAVEAT: THE AGENT IS TO GET THE TREASURER'S STAMP ON THE MYLAR AND TURN THE MYLAR OVER TO KEVIN CURRAN WITHOUT RECORDING IT. THE RECORDING WILL OCCUR LATER.**

NO ACTION IS TAKEN ON THESE CASES:
APPLICANT - AGENT IS REQUIRED TO BE AT THE MEETING

20. **Project # 1003865**
05DRB-00006 Minor-Sketch Plat or Plan

FORSTBAUER SURVEYING LLC agent(s) for PARKS CUSTOM BUILDERS INC request(s) the above action(s) for all or a portion of Lot(s) 11,12, 21 and 22, Block(s) 28, **NORTH ALBUQUERQUE ACRES, TRACT A, UNIT B,** zoned SU2 - IP, located on ALAMEDA BLVD NE, between SAN PEDRO NE and LOUISIANA NE containing approximately 4 acre(s). [REF: Z-87-42-1,DRB-99-187] (C-18) **THE ABOVE REQUEST WAS REVIEWED AND COMMENTS WERE GIVEN.**

21. **Project # 1001568**
05DRB-00002 Minor-Sketch Plat or Plan

ED HADDAWAY request(s) the above action(s) for all or a portion of Tract(s) 90 and 91A1-A1-B1-A, **MRGCD MAP 35,** zoned RA-2, located on RIO GRANDE BLVD NW, between INDIAN SCHOOL NW and MATTHEW NW containing approximately 2 acre(s). [REF: 01EPC01563, 04DRB01170] (H-13) **THE ABOVE REQUEST WAS REVIEWED AND COMMENTS WERE GIVEN.**

22. **Project # 1003863**
04DRB-01989 Minor-Sketch Plat or Plan

URS agent(s) for GLOBAL BRIDGE PARTNERS request(s) the above action(s) for all or a portion of Tract(s) C-2, **MENAUL SCHOOL INC,** zoned M-1, located on BROADBENT PARKWAY NE, between CANDELARIA NE and MENAUL NE containing approximately 2 acre(s). (H-15) **THE ABOVE REQUEST WAS REVIEWED AND COMMENTS WERE GIVEN.**

23. Approval of the Development Review Board Minutes for December 29, 2004. **THE DRB MINUTES FOR DECEMBER 29, 2004 WERE APPROVED BY THE BOARD.**

ADJOURNED: NOON

CITY OF ALBUQUERQUE

defer 1/26/05

PLANNING DEPARTMENT
DEVELOPMENT AND BUILDING SERVICES
HYDROLOGY DEVELOPMENT SECTION

ALBUQUERQUE
Making History

DEVELOPMENT REVIEW BOARD--SPEED MEMO

DRB CASE NO/PROJECT NO: 1003429 **AGENDA ITEM NO: 3**

SUBJECT:

(**01**) Sketch Plat/Plan	(**05**) Site Plan for Subd	(**10**) Sector Dev Plan
(**02**) Bulk Land Variance	(**06**) Site Plan for BP	(**11**) Grading Plan
(**03**) Sidewalk Variance	(**07**) Vacation	(**12**) SIA Extension
(**03a**) Sidewalk Deferral	(**08**) Final Plat	(**13**) Master Dev. Plan
(**04**) Preliminary Plat	(**09**) Infrastructure List	(**14**) Cost Allocation Plan

ACTION REQUESTED:

REV/CMT:() APP:(x) SIGN-OFF:() EXTN:() AMEND:()

P.O. Box 1293

Albuquerque

New Mexico 87103

www.cabq.gov

ENGINEERING COMMENTS:

An approved drainage report is required for Preliminary Plat approval.
An approved infrastructure list is required for Preliminary Plat approval.

RESOLUTION:

APPROVED ____; DENIED _____; DEFERRED _____; COMMENTS PROVIDED ___; WITHDRAWN

SIGNED-OFF: **(SEC-PLN) (SP-SUB) (SP-BP) (FP)** BY: **(UD) (CE) (TRANS) (PKS) (PLNG)**

DELEGATED: **(SEC-PLN) (SP-SUB) (SP-BP) (FP)** TO: **(UD) (CE) (TRANS) (PKS) (PLNG)**

FOR:

SIGNED: Bradley L. Bingham
City Engineer/AMAFCA Designee

DATE: January 12, 2005

Draft TW 1/26/05

DRB PUBLIC HEARING SIGN IN SHEETS

CASE NUMBER: 1003429 AGENDA#: 3 DATE: 1-12-05

1. Name: _____ Address: _____ Zip: _____

2. Name: _____ Address: _____ Zip: _____

3. Name: _____ Address: _____ Zip: _____

4. Name: _____ Address: _____ Zip: _____

5. Name: _____ Address: _____ Zip: _____

6. Name: _____ Address: _____ Zip: _____

7. Name: _____ Address: _____ Zip: _____

8. Name: _____ Address: _____ Zip: _____

9. Name: _____ Address: _____ Zip: _____

10. Name: _____ Address: _____ Zip: _____

11. Name: _____ Address: _____ Zip: _____

12. Name: _____ Address: _____ Zip: _____

13. Name: _____ Address: _____ Zip: _____

14. Name: _____ Address: _____ Zip: _____

CITY OF ALBUQUERQUE

PLANNING DEPARTMENT
DEVELOPMENT AND BUILDING SERVICES
HYDROLOGY DEVELOPMENT SECTION

ALBUQUERQUE
Making History

DEVELOPMENT REVIEW BOARD--SPEED MEMO

DRB CASE NO/PROJECT NO: 1003429 **AGENDA ITEM NO: 3**

SUBJECT:

(01) Sketch Plat/Plan	(05) Site Plan for Subd	(10) Sector Dev Plan
(02) Bulk Land Variance	(06) Site Plan for BP	(11) Grading Plan
(03) Sidewalk Variance	(07) Vacation	(12) SIA Extension
(03a) Sidewalk Deferral	(08) Final Plat	(13) Master Dev. Plan
(04) Preliminary Plat	(09) Infrastructure List	(14) Cost Allocation Plan

ACTION REQUESTED:

REV/CMT:() APP:(x) SIGN-OFF:() EXTN:() AMEND:()

ENGINEERING COMMENTS:

An approved drainage report is required for Preliminary Plat approval.
An approved infrastructure list is required for Preliminary Plat approval.

RESOLUTION:

DD 1-26-05

APPROVED ____; DENIED ____; DEFERRED ___✓___; COMMENTS PROVIDED ___; WITHDRAWN

SIGNED-OFF: **(SEC-PLN) (SP-SUB) (SP-BP) (FP)** BY: **(UD) (CE) (TRANS) (PKS) (PLNG)**

DELEGATED: **(SEC-PLN) (SP-SUB) (SP-BP) (FP)** TO: **(UD) (CE) (TRANS) (PKS) (PLNG)**

FOR:

SIGNED: Bradley L. Bingham
City Engineer/AMAFCA Designee

DATE: January 12, 2005

P.O. Box 1293
Albuquerque
New Mexico 87103
www.cabq.gov

CITY OF ALBUQUERQUE
PLANNING DEPARTMENT
DEVELOPMENT REVIEW BOARD

January 12, 2005

Project # 1003429
04DRB-01950 Major-Preliminary Plat Approval
04DRB-01951 Major-Vacation of Pub Right-of-Way
04DRB-01952 Major-Vacation of Public Easements
04DRB-01953 Minor-Sidewalk Waiver
04DRB-01954 Minor-Temp Defer SDWK

BOHANNAN HUSTON INC agent(s) for CURB INC request(s) the above action(s) for all or a portion of Tract(s) 16B & 16C EL RANCHO GRANDE, (to be known as **SIERRA RANCH SUBDIVISION,** zoned R-LT & RD, located on GIBSON BLVD SW, between MESSINA SW and GIBSON SW containing approximately 62 acre(s). [REF: 04DRB-01891, 04DRB00717] (N-8)

AMAFCA	AMAFCA does not approve Preliminary Plat until regional drainage issues have been coordinated with developers, the City and AMAFCA. Vacation of AMAFCA Drainage Easements will require approval of the Board of Directors.
COG	The future Gibson Blvd is proposed as a principal arterial with a right of way of 156'. Additionally, the Long Range Bikeway System map identifies Gibson West as a Study Corridor. City of Albuquerque Municipal Development should be consulted for bikeway improvements as appropriate.
Transit	Transit suggests a pedestrian connection between the eastern stub of Four Mile Rd and Mesina Dr to facilitate pedestrian access to Gibson Blvd. What is Tract 16-B-1? Transit suggests providing a pedestrian connection between Pipestone Rd and Amole Mesa Ave on that tract if feasible.
Zoning Enforcement	Reviewed, no comment.
Neighborhood Coordination	Letter sent to Westgate Heights NA (R).
APS	No comments received.
Police Department	No comments at this time.

Fire Department	Fire Department is not approving street widths less than 32 feet at this time. Per Ray Sanchez, AFD. All required fire hydrants shall be installed and made serviceable prior to and during construction of subdivision.
PNM Electric & Gas	Approves.
Comcast	No comments received.
QWEST	No comments received.
Environmental Health	Site is not within 1000 feet of a landfill. No comment.
M.R.G.C.D.	No comments received.
Open Space Division	No adverse comments.
City Engineer	An approved drainage report is required for Preliminary Plat approval. No objection to vacation of public R/W. No objection to vacation to public drainage easements with the condition that the AMAFCA board also vacates prior to Final Plat.

Transportation Development

Shouldn't sidewalks be deferred along Pipespring Street on the Southeast side? No objection to sidewalk waiver. No objection to street vacation actions. (Provide exhibit for Gibson showing that both sides have had equal opportunity for absorbing the vacated portion.) Defer to Hydrology regarding the other easement vacation requests. The lots need to be labeled P1 for use of a 46' roadway. Use lot #'s instead of east boundary or west boundary for descriptions. Why is there no median curb for Gibson? Messina, Amole and all entrances will require 6' sidewalks with a 6' landscape area. (Review the widths and lane layouts of the entrances. Does the intersection of Amole and Messina require turnbays? The bulk land plat must be completed before this action can be approved.

Parks & Recreation

The Park Dedication and Development Ordinance requirements are met with an existing agreement for the park dedicated with this plat. Label the park on the plat and dedicate it to COA. Add the park to the grading and drainage certification on the infrastructure list. Defer to affected agencies regarding the vacation requests. Defer to Transportation regarding the sidewalk request.

Utilities Developmen.

No objection to Preliminary Plat approval, although plat needs to show easements consistent with previous bulk land plat. No objection to Vacation requests. No objection to Sidewalk Waiver/Deferral.

Planning Department

The 15 day appeal period is not yet up for the bulk land plat approval. DRB cannot act on this preliminary plat until the 15 day appeal passes. The earliest date DRB can consider this application is at the January 26, 2005 hearing. Applicant should submit a letter requesting a deferral until this date and pay the deferral fee.

The perimeter wall submittal is not complete. The location map does not show walls where the side yards face streets. It's assumed these homes will have backyard walls extending to the side yard within 20' of the front yard property line. The maximum height for these walls is 6' on the street side assuming no retaining wall. The perimeter wall design should indicate if there are any retaining walls planned. Lots 372, 366, 359, 353, 356 and 183, 185 & 195 represent corner lots with rear yards contiguous to the front yards of abutting lots. Double check to see if this is a complete list of lots in this situation. Please see Section 14-16-3-19 of the Zone Code for the wall height requirements for these lots & include elevations for these lots in your perimeter wall design.

No objection to the requested acitons once the wall submittal ia approved and the appeal period for the bulk plat has passed.

IT IS REQUIRED THAT THE APPLICANT AND/OR AGENT BE PRESENT AT THE HEARING

cc: Curb Inc., 5160 San Francisco NE, 87109
Bohannan Huston Inc., 7500 Jefferson NE, 87109

ZONING MAP

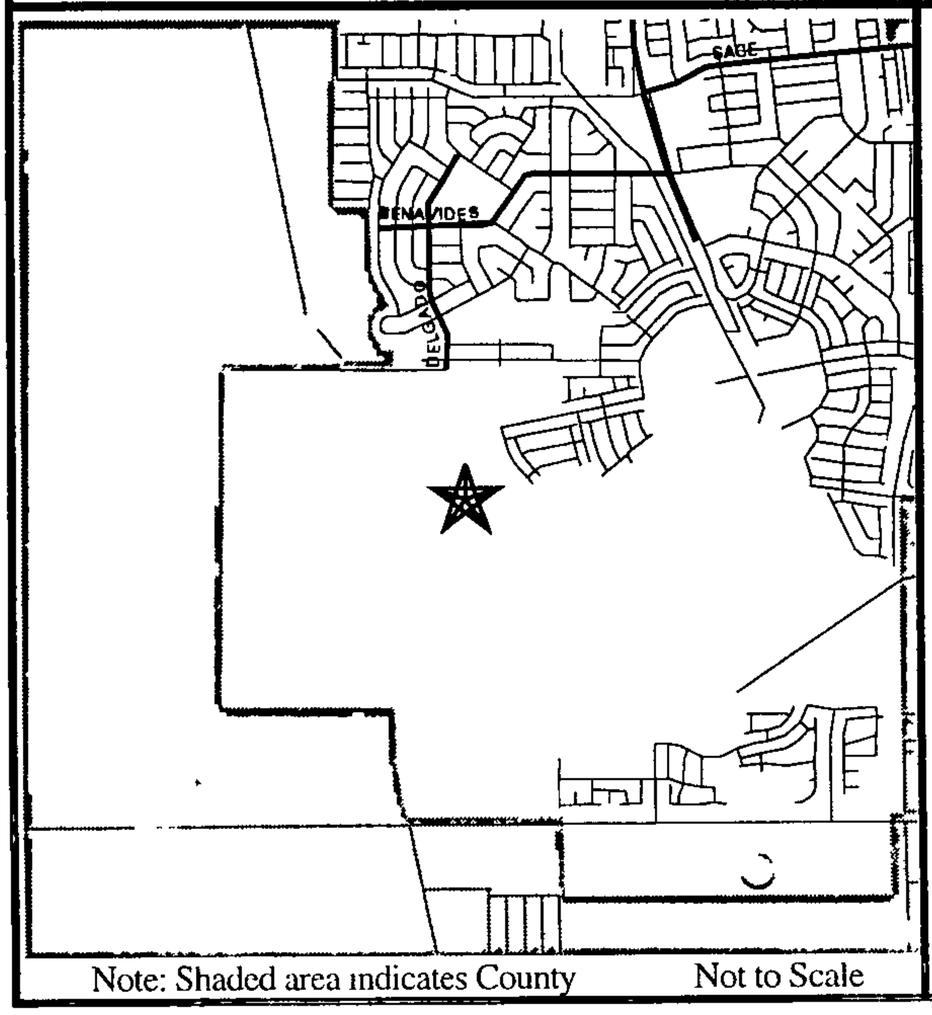

Note: Shaded area indicates County Not to Scale

Scale 1"= 1015 '

PROJECT NO.
1003429

HEARING DATE
1-12-05

MAP NO.
N-8

ADDITIONAL CASE NUMBER(S)
04DRB-01950
04DRB-01951
04DRB-01952

PUBLIC HEARING--DEVELOPMENT REVIEW BOARD
CITY OF ALBUQUERQUE

Notice is hereby given that the Development Review Board, City of Albuquerque, will hold a public hearing in the **Plaza del Sol Hearing Room, Basement, Plaza del Sol Building, 600 2nd St NW,** on **Wednesday, January 12, 2005,** beginning at **9:00 a.m.** for the purpose of considering the following:

Project # 1002384
04DRB-01942 Major-Two Year SIA

BOHANNAN HUSTON INC agent(s) for D R HORTON HOMES request(s) the above action(s) for all or a portion of Tract(s) 4, COORS VILLAGE, (to be known as **RANCHO ENCANTADO DEL SUR,** zoned SU-3, located on COORS BLVD NW, between ATRISCO BLVD NW and MILNE RD NW containing approximately 20 acre(s). [REF: 03DRB01369] (F-11)

Project # 1003429
04DRB-01950 Major-Preliminary Plat Approval
04DRB-01951 Major-Vacation of Pub Right-of-Way
04DRB-01952 Major-Vacation of Public Easements
04DRB-01953 Minor-Sidewalk Waiver
04DRB-01954 Minor-Temp Defer SDWK

BOHANNAN HUSTON INC agent(s) for CURB INC request(s) the above action(s) for all or a portion of Tract(s) 16B & 16C EL RANCHO GRANDE, (to be known as **SIERRA RANCH SUBDIVISION,** zoned R-LT & RD, located on GIBSON BLVD SW, between MESSINA SW and GIBSON SW containing approximately 62 acre(s). [REF: 04DRB-01891, 04DRB00717] (N-8)

Project # 1003471
04DRB-01948 Major-Amnd Prelim Plat Approval
04DRB-01949 Minor-Temp Defer SDWK

SURV TEK INC agent(s) for CURB WEST INC request(s) the above action(s) for all or a portion of Tract(s) B-2-A, PARADISE HEIGHTS (to be known as **SEVILLE SUBDIVISION, UNIT 3A**), zoned R-1, located on KAYENTA BLVD NW north of SEQUOIA AVE NW containing approximately 24 acre(s). [REF: 02DRB01791, 02DRB01250, 04DRB00826, 04DRB00827, 04DRB01224, 04DRB01225] (A-10)

Project # 1003172
04DRB-01955 Major-Preliminary Plat Approval
04DRB-01957 Minor-Temp Defer SDWK

TIERRA WEST LLC agent(s) for AMC DEVELOPMENT SERVICES request(s) the above action(s) for all or a portion of Tract(s) 1D, SEVILLE (to be known as **SEVILLE SUBDIVISION, UNIT 9,** zoned R-LT, located on KAYENTA ST NW, between IRVING BLVD NW and CALABACILLAS ARROYO containing approximately 8 acre(s). [REF: 04DRB00529] (A-10)

Project # 1002194
04DRB-01915 Major-Preliminary Plat Approval

GREATER ALBUQUERQUE HOUSING PARTNERSHIP request(s) the above action(s) for all or a portion of Tract(s) 2, **SUNPORT LODGINGS ADDITION,** zoned R-2, located on WELLESLEY SE, between CARLISLE SE and GIBSON SE containing approximately 2 acre(s). [REF: 03DRB01778, 03DRB00537, 04DRB01836] (L-16)

SEE PAGE 2 . . .

PUBLIC HEARING--DEVELOPMENT REVIEW BOARD
CITY OF ALBUQUERQUE

PAGE 2

Project # 1003585
04DRB-01958 Major-Preliminary Plat Approval

RIO GRANDE ENGINEERING agent(s) for PHILLIP RABY request(s) the above action(s) for all or a portion of Lot(s) 1, 2, 3 and 4, Block(s) 4, GRANADA HEIGHTS ADDITION, (to be known as **TOWNHOMES @ MASONS LANDING,** zoned O-R, located on SILVER AVE SE, between ALISO AVE SE and MORNINGSIDE AVE SE containing approximately 2 acre(s). [REF: 04DRB01168] (K-17)

Details of the application(s) may be examined at the Development Services Center of the Planning Department, Second Floor, Plaza Del Sol Building, 600 2nd St NW, between 10:00 a.m. and 12:00 p.m. or 2:00 p.m. and 4:00 p.m. Monday through Friday except holidays. Individuals with disabilities who need special assistance to participate at this meeting should contact Claire Senova, Planning Department, at 924-3946. Hearing Impaired users may contact her via the New Mexico Relay Network by calling toll-free: 1-800-659-8331.

.

for Sheran Matson, AICP, DRB Chair
Development Review Board

TO BE PUBLISHED IN THE ALBUQUERQUE JOURNAL MONDAY, DECEMBER 27, 2004.

* 475

CITY OF PLANNING
PLANNING DEPARTMENT
PROPERTY OWNERSHIP LIST

Meeting Date: JANUARY 12, 2005
Zone Atlas Page: N-8-Z
Notification Radius: 100 Ft.

Project# 1003429
App# 04DRB-01950
App# 04DRB-01951
App# 04DRB-01952
App# 04DRB-01953
App# 04DRB-01954

Cross Reference and Location:

Applicant: CURB, INC
Address: 5160 SAN FRANCISCO NE
ALBUQUERQUE NM 87109

Agent: BOHANNAN HUSTON, INC.
Address: 7500 JEFFERSON ST. NE
ALBUQUERQUE NM 87109

Special Instructions:

Notice must be mailed from the City's 15 day prior to the meeting.

Date Mailed: DECEMBER 23, 2004

Signature: KYLE TSETHLIKAI KT

100805433741210104 LEGAL: PARC EL 1 OF LANDS OF RIO BRAVO PARTNERS LOCATED IN LAND USE:
PROPERTY ADDR: 00000 N/A
OWNER NAME: CURB INC
OWNER ADDR: 06301 INDIAN SCHOOL RD NE ALBUQUERQUE NM 87110

100805450550010103 LEGAL: TR A -1 B ULK LAND PLAT FOR TRACT A-1, A-2 & B-1 ROS LAND USE:
PROPERTY ADDR: 00000
OWNER NAME: CURB INC
OWNER ADDR: 06301 INDIAN SCHOOL RD NE ALBUQUERQUE NM 87110

100805412043830140 LEGAL: 2-A PLAT OF LANDS OF RIO BRAVO PARTNERS PARCELS 2A LAND USE:
PROPERTY ADDR: 00000 N/A
OWNER NAME: ARROYO VISTA NEW MEXICO LLC
OWNER ADDR: 01880 SANTA BARBARA BL SAN LUIS OBICA 93401

100805450740010105 *** THIS UPC CODE HAS NO MASTER RECORD ON FILE

100805450434810101 *** THIS UPC CODE HAS NO MASTER RECORD ON FILE

100905403733020103 *** THIS UPC CODE HAS NO MASTER RECORD ON FILE

100805412226530141 LEGAL: 2-B PLAT OF LANDS OF RIO BRAVO PARTNERS PARCELS 2A LAND USE:
PROPERTY ADDR: 00000 N/A
OWNER NAME: ARROYO VISTA NEW MEXICO LLC
OWNER ADDR: 01880 SANTA BARBARA BL SAN LUIS OBICA 93401

100905406021530101 *** THIS UPC CODE HAS NO MASTER RECORD ON FILE

100805449520040130 LEGAL: TR B -1 B ULK LAND PLAT FOR TRACT A-1, A-2 & B-1 RO LAND USE:
PROPERTY ADDR: 00000
OWNER NAME: AVALON WEST INVESTMENTS LLC
OWNER ADDR: 06301 INDIAN SCHOOL RD NE ALBUQUERQUE NM 87110

100805433214030142 LEGAL: 2-D PLAT OF LANDS OF RIO BRAVO PARTNERS PARCELS 2A LAND USE:
PROPERTY ADDR: 00000 N/A
OWNER NAME: ARROYO VISTA NEW MEXICO LLC
OWNER ADDR: 01880 SANTA BARBARA BL SAN LUIS OBICA 93401

100805450740010105	LEGAL: TR 14 BULK LAND PLAT FOR TRACTS 14, 15, & 16 EL RANCHO GRANDE CONT 22.4339 AC PROPERTY ADDR: 00000 OWNER NAME: CURB INC OWNER ADDR: 6301 INDIAN SCHOOL RD NE, STE# 208 ALBUQUERQUE NM 87110
100805450434810101	LEGAL: TR 16 BULK LAND PLAT FOR TRACTS 14, 15, & 16 EL RANCHO GRANDE CONT 16.6622 AC PROPERTY ADDR: 00000 OWNER NAME: CURB INC OWNER ADDR: 6301 INDIAN SCHOOL RD NE, STE# 208 ALBUQUERQUE NM 87110
100905403733020103	LEGAL: TR 15 BULK LAND PLAT FOR TRACTS 14, 15, & 16 EL RANCHO GRANDE CONT 22.9599 AC PROPERTY ADDR: 00000 OWNER NAME: CURB INC OWNER ADDR: 6301 INDIAN SCHOOL RD NE, STE# 208 ALBUQUERQUE NM 87110
100905406021530101	LEGAL: TR 29A CORRECTION PLAT VACATION & BULK LAND PLAT TRACTS A, 29A, 30A-1, 31A-1, 32H-1, 3 PROPERTY ADDR: 00000 OWNER NAME: SALAZAR FAMILY TRUST & JSJ INVESTORS OWNER ADDR: PO BOX 1849 ALBUQUERQUE NM 87199

"Attachment A"

BOHANNAN^HUSTON, STEPHANIE
ZONE MAP: N-8

Westgate Heights NA (R)
***Matthew Archuleta**
1628 Summerfield SW/ 87121 836-7251 (h)
Libby McIntosh
1316 Ladrones Ct. SW/ 87121 831-5189 (h)

ALTHOUGH YOU ARE NOT "OFFICIALLY REQUIRED" BY O-92, you are most welcomed to notify the following *"Unrecognized"* neighborhood associations of this project.

LETTERS MUST BE SENT TO BOTH CONTACTS OF EACH NEIGHBORHOOD ASSOCIATION.

Bohannan Huston INC.

Courtyard I
7500 Jefferson St. NE
Albuquerque, NM
87109-4335

www.bhinc.com

voice: 505.823.1000
facsimile: 505.798.7988
toll free: 800.877.5332

Please place this item on the DRB Agenda to be heard January 12, 2005. If you have any questions or require further information, please call me at 823-1000.

Sincerely,

Scott Steffen, P.E.
Project Manager
Community Development and Planning Group

SS
Enclosure

P \050188\cdp\corres\Letters\050188 Preplat letter doc

WESTGATE DRAINAGE DAM

AMOLE ARROYO DESIGN OVERLAY ZONE

WALL OVERLAY ZONE R-1/WO-4

RIO BRAVO

GIBSON

SANDY RIDGE

SANDY CREEK

SANDY TRAIL

UNIT 1

UNIT 2

EL RANCHO GRANDE

RIO BRAVO SECTION DEVELOPMENT PLAN BOUNDARY

RIO BRAVO PARTNERS

R-D

R-LT

1

2A

2B

2C

2D

16

A1

B1

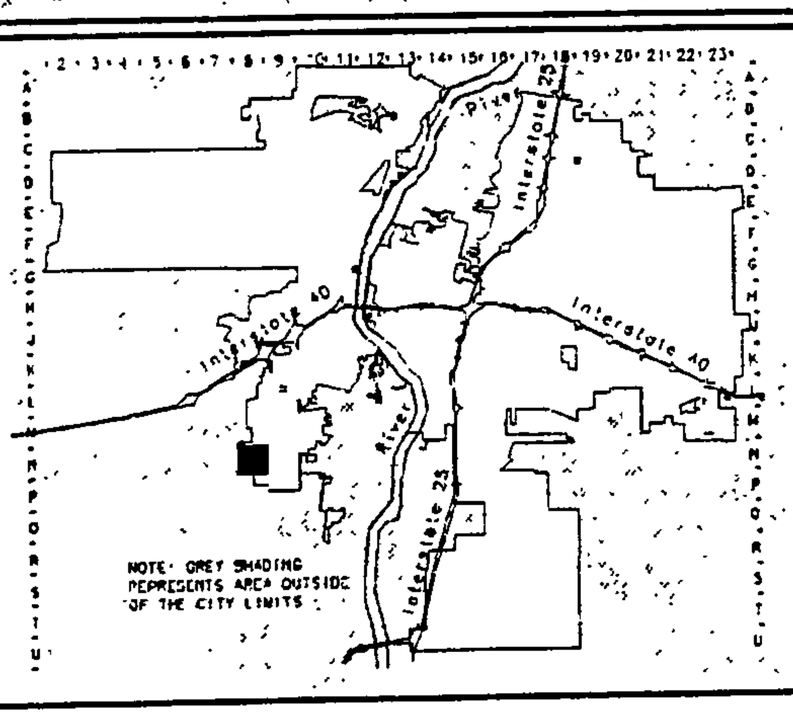

CITY OF ALBUQUERQUE · NEW MEXICO · 1706

Albuquerque Geographic Information System

PLANNING DEPARTMENT

©Copyright 2004

GRAPHIC SCALE IN FEET

250 0 750 1000

Zone Atlas Page

N-8-Z

Map Amended through December 03, 2004

El Rio Grande

FORM V: SUBDIVISION VARIA[illegible]S & VACATIONS

☐ **BULK LAND VARIANCE** **(PUBLIC HEARING CASE)**

__ Application for subdivision (Plat) on FORM S-3, including those submittal requirements **24 copies** of the plat are required. The Variance and subdivision should be applied for simultaneously.
__ Letter briefly describing and explaining: the request, compliance with criteria in the Development Process Manual, and any improvements to be waived.
__ Notice on the proposed Plat that there are conditions to subsequent subdivision (refer to DPM)
__ Office of Community & Neighborhood Coordination inquiry response, notifying letter, certified mail receipts
__ Sign Posting Agreement
__ Fee (see schedule) Fee is for Variance. Plat fee is listed on FORM-S
__ Any original and/or related file numbers are listed on the cover application

DRB Public hearings are approximately ONE MONTH after the filing deadline. Your attendance is required.

☒ **VACATION OF PUBLIC RIGHT-OF-WAY**
☒ **VACATION OF PUBLIC EASEMENT**

✓ The complete document which created the public easement (folded to fit into an 8.5" by 14" pocket) **24** copies. (Not required for dedicated and City owned public right-of-way.)
✓ Drawing showing the easement or right-of-way to be vacated, its relation to existing streets, etc. (folded to fit into an 8.5" by 14" pocket) **24** copies
✓ Zone Atlas map with the entire property(ies) precisely and clearly outlined and crosshatched (to be photocopied)
✓ Letter briefly describing, explaining, and justifying the request
✓ Office of Community & Neighborhood Coordination inquiry response, notifying letter, certified mail receipts
✓ Sign Posting Agreement
✓ Fee (see schedule)
✓ Any original and/or related file numbers are listed on the cover application

Unless the vacation is shown on a DRB approved plat recorded by the County Clerk within one year, it will expire.
DRB Public hearings are approximately ONE MONTH after the filing deadline. Your attendance is required.

☐ **SUBDIVISION DESIGN VARIANCE (VARIANCE FROM MINIMUM STANDARDS OF THE DEVELOPMENT PROCESS MANUAL)**
☐ **SIDEWALK DESIGN VARIANCE**
☒ **SIDEWALK WAIVER**

__ Scale drawing showing the proposed variance or waiver (folded to fit into an 8.5" by 14" pocket) **6** copies for unadvertised meetings. These actions are not approved through internal routing.
__ Zone Atlas map with the entire property(ies) precisely and clearly outlined and crosshatched (to be photocopied)
__ Letter briefly describing, explaining, and justifying the variance or waiver
__ Any original and/or related file numbers are listed on the cover application

DRB meetings are approximately 8 DAYS after the Tuesday noon filing deadline. Your attendance is required.

☒ **TEMPORARY DEFERRAL OF SIDEWALK CONSTRUCTION**
☐ **EXTENSION OF THE SIA FOR TEMPORARY DEFERRAL OF SIDEWALK CONSTRUCTION**

__ Drawing showing the sidewalks subject to the proposed deferral or extension (folded to fit into an 8.5" by 14" pocket) **6** copies for unadvertised meetings. These actions are not approved through internal routing.
__ Zone Atlas map with the entire property(ies) precisely and clearly outlined and crosshatched (to be photocopied)
__ Letter briefly describing, explaining, and justifying the deferral or extension
__ Any original and/or related file numbers are listed on the cover application

DRB meetings are approximately 8 DAYS after the Tuesday noon filing deadline. Your attendance is required.

☐ **VACATION OF PRIVATE EASEMENT**

__ The complete document which created the private easement (folded to fit into an 8.5" by 14" pocket) **6** copies for unadvertised meetings. These actions are not approved through internal routing.
__ Scale drawing showing the easement to be vacated, its relation to existing streets, etc. (folded to fit into an 8.5" by 14" pocket) **6** copies
__ Zone Atlas map with the entire property(ies) precisely and clearly outlined and crosshatched (to be photocopied)
__ Letter briefly describing, explaining, and justifying the vacation
__ Letter of authorization from the grantors and the beneficiaries
__ Fee (see schedule)
__ Any original and/or related file numbers are listed on the cover application

Unless the vacation is shown on a DRB approved plat recorded by the County Clerk within one year, it will expire.
DRB meetings are approximately 8 DAYS after the Tuesday noon filing deadline. Your attendance is required.

I, the applicant, acknowledge that any information required but not submitted with this application will likely result in deferral of actions.

Scott Steffen — Applicant name (print)

Applicant signature / date 12/16/04

Form revised 4/03 and October 2003

☐ Checklists complete
☐ Fees collected
☐ Case #s assigned
☐ Related #s listed

Application case numbers
04DRB -01951
04DRB -01952
04DRB 01953
04DRB 01954

12-17-04
Planner signature / date

Project # 1003429

PUBLIC HEARING--DEVELOPMENT REVIEW BOARD
CITY OF ALBUQUERQUE

PAGE 2

Project #1003429
04DRB-01891 Major-Bulk Land Variance
04DRB-01892 Minor-Prelim&Final Plat Approval

ALDRICH LAND SURVEYING agent(s) for RIO BRAVO PARTNERS request(s) the above action(s) for all or a portion of Parcel 1, **RIO BRAVO PARTNERS**, Tract(s) 16, **EL RANCHO GRANDE, UNIT 14** and a portion of **WESTGATE DRAINAGE DAM,** zoned RD & RLT, located on GIBSON BLVD SW, between MESSINA DR SW and DELGADO DR SW containing approximately 121 acre(s). [REF: 04DRB00717] (N-8)

Details of the application(s) may be examined at the Development Services Center of the Planning Department, Second Floor, Plaza Del Sol Building, 600 2nd St NW, between 10:00 a.m. and 12:00 p.m. or 2:00 p.m. and 4:00 p.m. Monday through Friday except holidays. Individuals with disabilities who need special assistance to participate at this meeting should contact Claire Senova, Planning Department, at 924-3946. Hearing Impaired users may contact her via the New Mexico Relay Network by calling toll-free: 1-800-659-8331.

Sheran Matson, AICP, DRB Chair
Development Review Board

TO BE PUBLISHED IN THE ALBUQUERQUE JOURNAL MONDAY, DECEMBER 20, 2004.

PUBLIC HEARING--DEVELOPMENT REVIEW BOARD
CITY OF ALBUQUERQUE

Notice is hereby given that the Development Review Board, City of Albuquerque, will hold a public hearing in the **Plaza del Sol Hearing Room, Basement, Plaza del Sol Building, 600 2nd St NW,** on **Wednesday, January 5, 2005,** beginning at **9:00 a.m.** for the purpose of considering the following:

Project # 1000269
04DRB-01894 Major-Two Year SIA

TIERRA WEST LLC agent(s) for UNION PENSION TRANSACTION TRUST NM 2000-02 request(s) the above action(s) for all or a portion of Tract(s) 5B2C1B, 5B2B1 and 5B2C1A1, **RENAISSANCE CENTER,** zoned SU-1 C-2, located on MERCANTILE AVE NE, between CULTURE AVE NE and PAN AMERICAN FWY NE containing approximately 1 acre(s). [REF: 00DRB00226, 03DRB01269] (F-16)

Project # 1000419
04DRB-01897 Major-Two Year SIA

TIERRA WEST LLC agent(s) for UNION PENSION TRANSACTION TRUST NM 2000-02 request(s) the above action(s) for all or a portion of Tract(s) 1B1A, 1B1B and 1B1C, **RENAISSANCE CENTER,** zoned SU1 C-1, located on RENAISSANCE BLVD NE, between MONTANO RD NE and UNION WAY RD NE containing approximately 3 acre(s). [REF: 02AA00165 & 00164, 02AA00814, 03DRB00590] (F-16)

Project # 1000662
04DRB-01893 Major-Two Year SIA

TIERRA WEST LLC agent(s) for UNION PENSION TRANSACTION TRUST NM 2000-02 request(s) the above action(s) for all or a portion of Tract(s) 3A3A1, 3A3A3 and 3A3A2A, **RENAISSANCE CENTER,** zoned SU-1 IP, located on MISSION BLVD NE, between ALEXANDER BLVD NE and CULTURE DR NE containing approximately 8 acre(s [REF: 00AA00943, 04DRB00370 & 00310] (F-16)

Project # 1000874
04DRB-01895 Major-Two Year SIA

TIERRA WEST LLC agent(s) for UNION PENSION TRANSACTION TRUST NM 2000-02 request(s) the above action(s) for all or a portion of Tract(s) B1, C2, C3 and C4, **RENAISSANCE CENTER,** zoned SU-1 IP, located on MONTANO RD NE, between ALEXANDER BLVD NE and PAN AMERICAN FWY NE containing approximately 9 acre(s). [REF: 00DRB01464, 03DRB00444] (F-16)

Project # 1001118
04DRB-01896 Major-Two Year SIA

TIERRA WEST LLC agent(s) for UNION PENSION TRASACTION TRUST NM 2000-02 request(s) the above action(s) for all or a portion of Tract(s) 4A1 and 4A2, **RENAISSANCE CENTER,** zoned SU-1 FOR IP, located on RENAISSANCE BLVD NE, between CULTURE AVE NE and ALEXANDER BLVD NE containing approximately 9 acre(s). [REF: 03AA02065, 01DRB00342] (F-16)

SEE PAGE 2 . . .

CITY OF ALBUQUERQUE

UNABLE TO FORWARD

THREE HUNDRED YEARS
1706 * 2006

ALBUQUERQUE

Making History

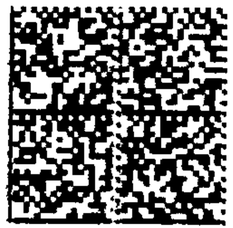

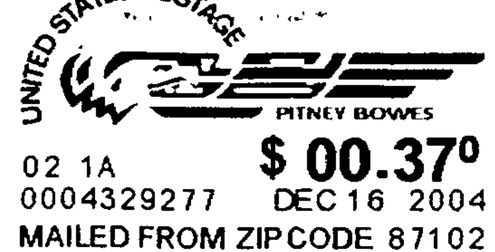

Planning Department

P.O. Box 1293

Albuquerque, NM 87103

UNITED STATES POSTAGE
PITNEY BOWES
02 1A $ 00.37⁰
0004329277 DEC 16 2004
MAILED FROM ZIP CODE 87102

100805533700542008

VITELA AMADEO & GAYLE
10904 CARTAGENA SW
ALBUQUERQUE NM 87105

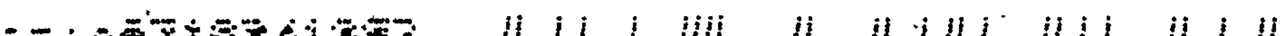

FILE

DRB# 1003429
Rio Grande

EXHIBIT B

FINAL
PRE-DEVELOPMENT FACILITIES FEE AGREEMENT

THIS AGREEMENT is made by and between the Albuquerque Municipal School District No. 12, Bernalillo and Sandoval Counties, New Mexico ("Albuquerque Public Schools" or "APS"), a public school district organized and existing pursuant to the laws of New Mexico, and Curb Inc. ("Developer") effective as of this 15 day of January, 20 07, and pertains to the subdivision commonly known as Sierra Ranch Subdivision Unit 2, and more particularly described as Tract A Sierra Ranch Subdivision Phase II (consisting of 176 single-family lots) (the "Subdivision".) The following individual lots comprise the subdivision:

[List lots by street address; Lots which will be used for multi-family residences should be marked "multifamily- __ units" with the number of units filled in.]

WHEREAS, the City of Albuquerque requires that APS approve the plat(s) for any new subdivision; and

WHEREAS, Developer is proposing the development of a new residential subdivision, and requires APS approval of the plat for said subdivision; and

WHEREAS, Developer is the owner of the real estate being subdivided and platted; and

WHEREAS, Developer is required by the Albuquerque Subdivision Ordinance to provide appropriate infrastructure and improvements as a condition of developing a subdivision; and

WHEREAS, as a condition of approving such plat APS requires the provision of appropriate infrastructure and facilities or the payment of a facilities fee for each new residence to be constructed to help defray the cost of school construction, expansion, or maintenance; and

WHEREAS, APS has determined that the amount of the facilities fee is reasonably related to the impact the subdivision will have on the operation of the area schools.

THEREFORE, in consideration of the mutual promises contained herein, APS and Developer agree as follows:

1. Developer agrees to pay to APS a facilities fee for each dwelling unit to be constructed in the Subdivision.

2. The amount of the fee shall be:

- If the building permit is issued on or after January 1, 2007, the fee shall be $1875 per dwelling unit.

2007009500
6592447
Page: 1 of 3
01/18/2007 01:42P
Margaret C Toulouse Bern. Co. AGRE R 13.00 Bk-A130 Pg-9482

DRB# 1003429
Rio Grande

- If the building permit is issued on or after July 1, 2008, the fee shall be $2425 per dwelling unit.

- If the permit is issued on or after January 1, 2010, the fee shall be $2975 per dwelling unit.

The fee for each dwelling unit in multi-family residential structures shall be sixty percent (60 %) of the fee for a single family home. "Multi-family residential structure" means any type of residential property other than single-family houses (one single family, detached dwelling unit per lot).

3. Developer agrees that the fee shall be paid to APS at or before the issuance of any building permit for any lot or other parcel of property subject to this agreement.

4. Developer may satisfy all or part of its obligations under this contract by transferring improved or unimproved property to APS, provided that APS must agree to the transfer and to the value placed on the transferred property. APS, upon accepting such transfer, shall credit Developer with an amount equal to the agreed value, and the developer may designate the lot(s) to which such amount(s) shall be applied in satisfaction of its obligations hereunder.

5. This contract may be recorded in the office of the County Clerk of Bernalillo and/or Sandoval County, and shall serve as notice of the Developer's obligation to pay facilities fees. Developer shall include on the plat of the Subdivision a statement that "The property on this plat is subject to a Pre-Development Facilities Fee Agreement with the Albuquerque Public Schools, recorded at [recording data]."

6. APS, through its Facilities Fee Administrator, will provide a Payment Acknowledgement in the form attached hereto to the Developer reflecting receipt of the facilities fee (or equivalent compensation as described in paragraph 4 above), which form may be given to the City to show satisfaction of the fee obligation and satisfy that condition for receiving building permits. Developer may record that Payment Acknowledgment in the real estate records of Bernalillo or Sandoval County, but APS shall not be responsible for paying any recording fees nor shall APS be responsible for recording any such documents with the office of the County Clerk or any other office.

Charles A Haeglin
Signature

Charles A. Haeglin, President
Name (typed or printed) and title

Curb Inc. Developer

2007009500
6592447
Page: 2 of 3
01/18/2007 01:42P
Bk-A130 Pg-9482
Margaret C Toulouse Bern. Co. AGRE R 13.00

DRB# 1003429
Rio Grande.

STATE OF NEW MEXICO

COUNTY OF BERNALILLO

This instrument was acknowledged before me on 1-15-2007, by Charles A. Haeglin as President of Curb Inc., a corporation.

(Seal) OFFICIAL SEAL STEPHANIE L. WALTON NOTARY PUBLIC - STATE OF NEW MEXICO My Commission Expires: 6-24-07

Stephanie L. Walton
Notary Public

My commission expires: 6-24-07

ALBUQUERQUE PUBLIC SCHOOLS

By: _____
Signature

Kizito Wijenjo, Capital Master Plan Director
Name (typed or printed) and title

STATE OF NEW MEXICO

COUNTY OF BERNALILLO

This instrument was acknowledged before me on 1-17-07, by Kizito Wijenjo as Capital Masterplan Director of the Albuquerque Municipal School District No. 12, Bernalillo and Sandoval Counties, a school district organized and existing under the laws of the State of New Mexico.

(Seal) OFFICIAL SEAL Martin Eckert, Jr. NOTARY PUBLIC STATE OF NEW MEXICO My Commission Expires: July 8, 2008

Martin Eckert Jr.
Notary Public

My commission expires: July 8, 2008

Margaret C Toulouse Bern. Co. AGRE R 13.00 2007009500 6592447 Page: 3 of 3 01/18/2007 01:42P Bk-A130 Pg-9482

City of Albuquerque

DEVELOPMENT PLAN REVIEW APPLICATION

	Supplemental form		Supplemental form
SUBDIVISION	**S**	**ZONING & PLANNING**	**Z**
☒ Major Subdivision action		☐ Annexation	
☐ Minor Subdivision action		☐ County Submittal	
☐ Vacation	**V**	☐ EPC Submittal	
☐ Variance (Non-Zoning)		☐ Zone Map Amendment (Establish or Change Zoning	
SITE DEVELOPMENT PLAN	**P**	☐ Sector Plan (Phase I, II, III)	
☐ ...for Subdivision Purposes		☐ Amendment to Sector, Area, Facility or Comprehensive Plan	
☐ ...for Building Permit		☐ Text Amendment	
☐ IP Master Development Plan			
☐ Cert. of Appropriateness (LUCC)	**L**	**APPEAL / PROTEST of...**	**A**
		☐ Decision by: DRB, EPC, LUCC, Planning Director or Staff, ZHE, Zoning Board of Appeals	

PRINT OR TYPE IN BLACK INK ONLY. The applicant or agent must submit the completed application in person to the Planning Department Development Services Center, 600 2nd Street NW, Albuquerque, NM 87102. Fees must be paid at the time of application. Refer to supplemental forms for submittal requirements.

APPLICANT INFORMATION:

NAME: CURB, INC. PHONE: 899-9656
ADDRESS: 5160 SAN FRANCISCO NE FAX: 875-1723
CITY: ALBUQUERQUE STATE NM ZIP87109 E-MAIL: ____
Proprietary interest in site: OWNER
AGENT (if any): BOHANNAN HUSTON INC. PHONE: 823-1000
ADDRESS: 7500 JEFFERSON NE FAX: 798-7988
CITY: ALBUQUERQUE STATE NM ZIP 87109 E-MAIL: ____

DESCRIPTION OF REQUEST: FINAL PLAT APPROVAL

Is the applicant seeking incentives pursuant to the Family Housing Development Program? ☐ Yes. ☒ No.

SITE INFORMATION: ACCURACY OF THE LEGAL DESCRIPTION IS CRUCIAL! ATTACH A SEPARATE SHEET IF NECESSARY.

Lot or Tract No. TRACT 16B, 16C EL RANCHO GRANDE Block: ____ Unit: 2

Subdiv. / Addn. SIERRA RANCH SUBDIVISION

Current Zoning: R-D Proposed zoning: ____

Zone Atlas page(s): N-8 No. of **existing** lots: 1 No. of **proposed** lots: 176

Total area of site (acres): 28.3760 Density if applicable: dwellings per gross acre: ____ dwellings per net acre: ____

Within city limits? ☒ Yes. No ☐, but site is within 5 miles of the city limits (DRB jurisdiction.) Within 1000FT of a landfill? NO

UPC No. 100805433741210104 MRGCD Map No. ____

LOCATION OF PROPERTY BY STREETS: On or Near: GIBSON BLVD. SW
Between: AMOLE MESA AVE. SW and ____

CASE HISTORY:

List **any** current or prior case number that may be relevant to your application (Proj., App., DRB-, AX_,Z_, V_, S_, etc.): DRB# 1003429

Check-off if project was previously reviewed by Sketch Plat/Plan ☐, or Pre-application Review Team ☐. Date of review: ____

SIGNATURE Stephanie Walton DATE 1/2/2007

(Print) SCOTT STEFFEN ☐ Applicant ☒ Agent

FOR OFFICIAL USE ONLY Form revised 10/03

☐ **INTERNAL ROUTING**

	Application case numbers	Action	S.F.	Fees
☑ All checklists are complete	07DRB-____-00002	FP	5(3)	$ 0.00
☑ All fees have been collected	____-____-____	CME	____	$ 20.00
☑ All case #s are assigned	____-____-____	____	____	$ ____
☑ AGIS copy has been sent	____-____-____	____	____	$ ____
☑ Case history #s are listed	____-____-____	____	____	$ ____
☑ Site is within 1000ft of a landfill	____-____-____	____	____	$ ____
☑ F.H.D.P. density bonus				Total
☐ F.H.D.P. fee rebate	Hearing date 01/10/07			$ 20.00

Sandy Handley 01/02/07
Planner signature / date

Project # 1003429

Sierra Ranch unit 2

FORM S(3): SUBDIVISION - D.R.B. MEETING (UNADVERTISED) OR INTERNAL ROUTING

❑ **SKETCH PLAT REVIEW AND COMMENT** **YOUR ATTENDANCE IS REQUIRED.**

__ Scale drawing of the proposed subdivision plat (folded to fit into an 8.5" by 14" pocket) **6** copies for unadvertised meetings. Sketches are not reviewed through internal routing.
__ Site sketch with measurements showing structures, parking, Bldg. setbacks, adjacent rights-of-way and street improvements, etcetera, if there is any existing land use (folded to fit into an 8.5" by 14" pocket) **6** copies.
__ Zone Atlas map with the entire property(ies) precisely and clearly outlined and crosshatched (to be photocopied)
__ Letter briefly describing, explaining, and justifying the request
__ Any original and/or related file numbers are listed on the cover application

❑ **MAJOR SUBDIVISION EXTENSION OF PRELIMINARY PLAT** **Your attendance is required.**

__ Preliminary Plat reduced to 8.5" x 11"
__ Zone Atlas map with the entire property(ies) precisely and clearly outlined and crosshatched (to be photocopied)
__ Letter briefly describing, explaining, and justifying the request
__ Copy of previous D.R.B. approved infrastructure list
__ Copy of the LATEST Official D.R.B. Notice of approval for Preliminary Plat Extension request
__ Any original and/or related file numbers are listed on the cover application

Extensions are not reviewed through internal routing.
Extension of preliminary plat approval expires after one year.

❑ **MAJOR SUBDIVISION FINAL PLAT APPROVAL** **Your attendance is required.**

__ Proposed Final Plat (folded to fit into an 8.5" by 14" pocket) **6** copies for unadvertised meetings
__ Signed & recorded Final Pre-Development Facilities Fee Agreement for **Residential** development only
__ Design elevations & cross sections of perimeter walls **3 copies**
__ Zone Atlas map with the entire property(ies) precisely and clearly outlined and crosshatched (to be photocopied)
__ Original Mylar drawing of the proposed plat for internal routing only. Otherwise, bring Mylar to meeting.
__ Property owner's and City Surveyor's signatures on the Mylar drawing
__ Copy of recorded SIA
__ Landfill disclosure and EHD signature line on the Mylar drawing if property is within a landfill buffer
__ Any original and/or related file numbers are listed on the cover application
__ **DXF FILE AND HARD COPY OF FINAL PLAT DATA FOR AGIS IS REQUIRED.**

❑ **MINOR SUBDIVISION PRELIMINARY / FINAL PLAT APPROVAL** **Your attendance is required.**

__ Proposed Preliminary / Final Plat (folded to fit into an 8.5" by 14" pocket) **6** copies for unadvertised meetings, **4** copies for internal routing.
__ Signed & recorded Final Pre-Development Facilities Fee Agreement for **Residential** development only
__ Site sketch with measurements showing structures, parking, Bldg. setbacks, adjacent rights-of-way and street improvements, etcetera, if there is any existing land use (folded to fit into an 8.5" by 14" pocket) **6** copies.
__ Zone Atlas map with the entire property(ies) precisely and clearly outlined and crosshatched (to be photocopied)
__ Letter briefly describing, explaining, and justifying the request
__ Original Mylar drawing of the proposed plat for internal routing only. Otherwise, bring Mylar to meeting.
__ Property owner's and City Surveyor's signatures on the Mylar drawing
__ Landfill disclosure and EHD signature line on the Mylar drawing if property is within a landfill buffer
__ Fee (see schedule)
__ Any original and/or related file numbers are listed on the cover application
__ Infrastructure list if required **(verify with DRB Engineer)** **NO INTERNAL ROUTING**
__ **DXF FILE AND HARD COPY OF FINAL PLAT DATA FOR AGIS IS REQUIRED.**

❑ **AMENDMENT TO PRELIMINARY PLAT (with minor changes)** **Your attendance is required.**
❑ **AMENDMENT TO INFRASTRUCTURE LIST (with minor changes)**
❑ **AMENDMENT TO GRADING PLAN (with minor changes)**

PLEASE NOTE: There are no clear distinctions between significant and minor changes with regard to subdivision amendments. Significant changes are those deemed by the DRB to require public notice and public hearing.

__ Proposed Amended Preliminary Plat, Infrastructure List, and/or Grading Plan (folded to fit into an 8.5" by 14" pocket) **6** copies for unadvertised meetings.
__ Original Preliminary Plat, Infrastructure List, and/or Grading Plan (folded to fit into an 8.5" by 14" pocket) **6** copies for unadvertised meetings
__ Zone Atlas map with the entire property(ies) precisely and clearly outlined and crosshatched (to be photocopied)
__ Letter briefly describing, explaining, and justifying the request
__ Original Mylar drawing of the proposed amended plat for internal routing only. Otherwise, bring Mylar to meeting.
__ Property owner's and City Surveyor's signatures on the Mylar drawing, if the plat is being amended
__ Any original and/or related file numbers are listed on the cover application

Amended preliminary plat approval expires after one year

.

I, the applicant, acknowledge that any information required but not submitted with this application will likely result in deferral of actions.

Scott Steffen
Applicant name (print)

for Stephanie Walton 1-2-07
Applicant signature / date

Form revised 8/04, 1/05 ,10/05 & **NOV 06**

☑ Checklists complete
☑ Fees collected
☑ Case #s assigned
☐ Related #s listed

Application case numbers
07DRB - _____ - 00002
_____ - _____ - _____
_____ - _____ - _____

Sandy Sandoval 01/02/07
Planner signature / date

Project # 1003429

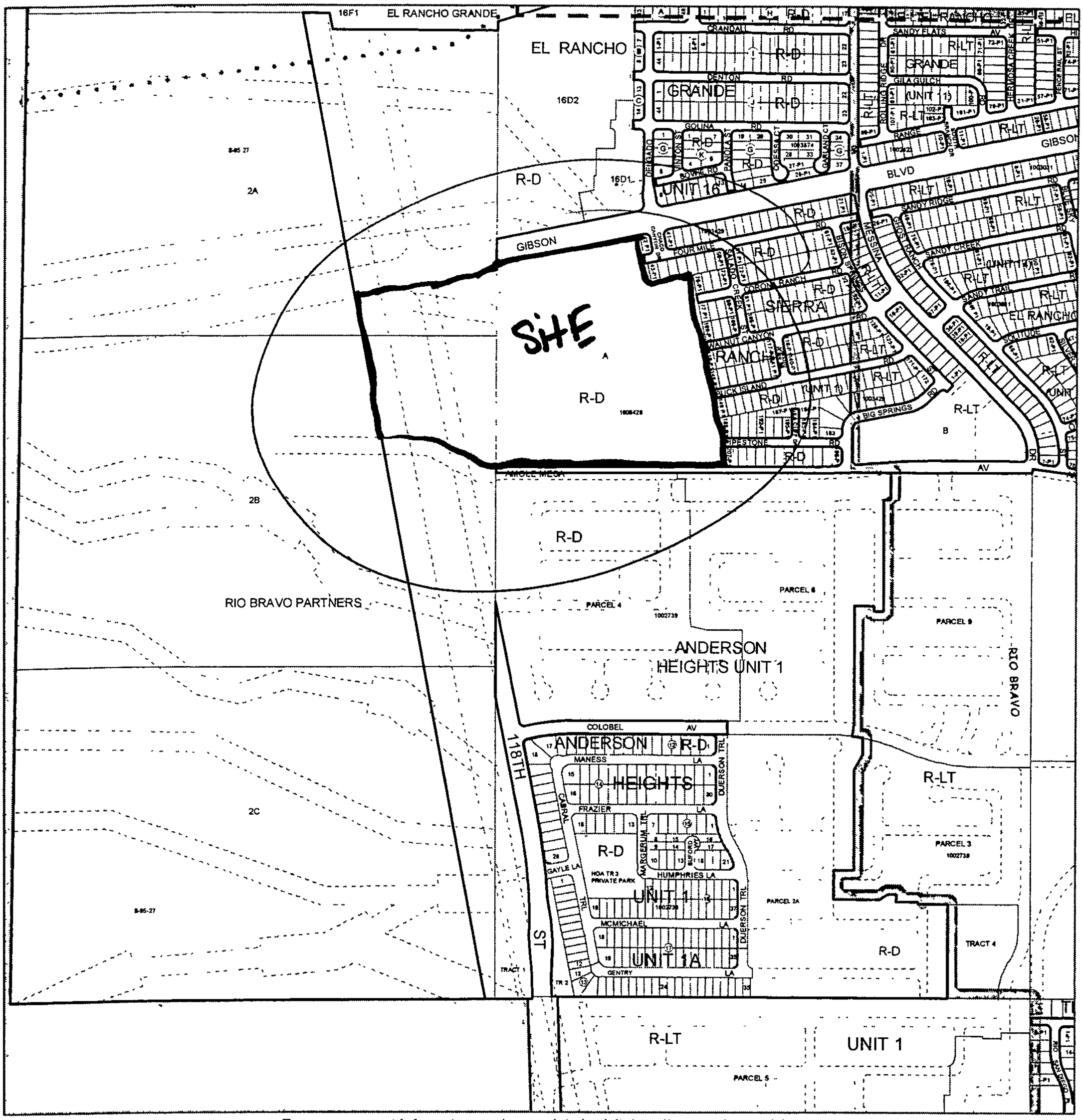

For more current information and more details visit: http://www.cabq.gov/gis

Albuquerque Geographic Information System

Map amended through: 11/2/2005

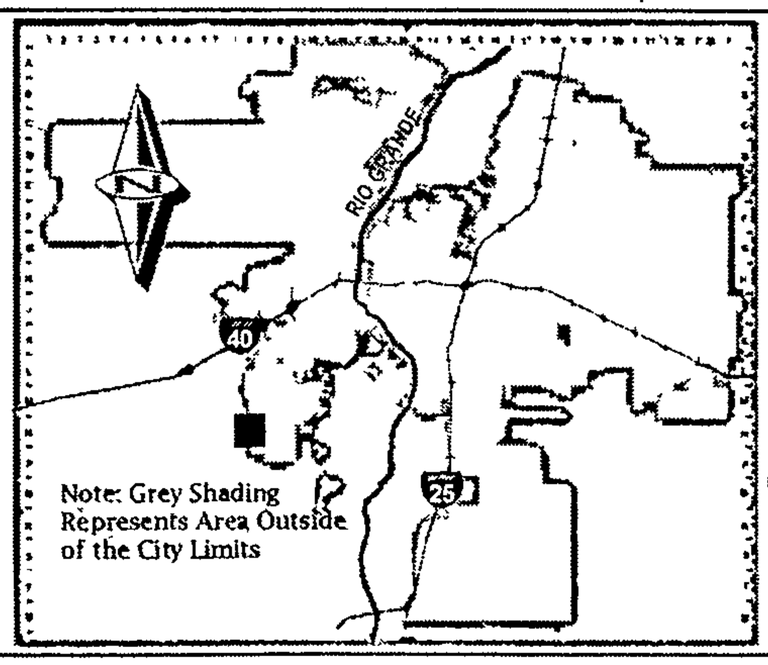

Zone Atlas Page:

N-08-Z

Selected Symbols

- SECTOR PLANS
- Design Overlay Zones
- City Historic Zones
- H-1 Buffer Zone
- Petroglyph Mon
- Escarpment
- 2 Mile Airport Zone
- Airport Noise Contours
- Wall Overlay Zone

0 — 750 — 1,500 Feet

Bohannan Huston INC.

Courtyard I
7500 Jefferson St. NE
Albuquerque, NM
87109-4335

www.bhinc.com

voice: 505.823.1000
facsimile: 505.798.7988
toll free: 800.877.5332

January 2, 2007

Sheran Matson, Chair
Development Review Board
City of Albuquerque
P.O. Box 1293
Albuquerque, New Mexico 87103

Re: Final Plat Approval
Sierra Ranch Unit 2 Subdivision DRB# 1003429

Dear Sheran:

We are requesting final plat approval of the Sierra Ranch Unit 2 subdivision. This project was approved for preliminary plat on January 26, 2005 and consists of 176 residential lots on 28.3760 acres of land (Tract 16-B El Rancho Grande) located south of Gibson Boulevard and west of Messina Drive in southwest Albuquerque.

Enclosed for review and approval by the Development Review Board (DRB) are copies of the following information:

- Development Review Applications
- Six (6) copies of the Final Plat, and
- Zone Atlas Map showing the location of the property
- SIA Approval
- Design Elevations walls (3) copies
- Letter justifying request

Please place this item on the DRB Agenda to be heard on January 13, 2007. If you have any questions or require additional information, please contact me.

Sincerely,

for Stephanie Walton

Scott J. Steffen, P.E.
Project Engineer
Community Development and Planning Group

SW
Enclosure

P \050188\cdp\corres\005-drb_plat_process\FINALPLAT2 doc

ONE STOP SHOP
CITY OF ALBUQUERQUE PLANNING DEPARTMENT
Development & Building Services

PAID RECEIPT

APPLICANT NAME CURB INC

AGENT BOHANNAN HUSTON INC

ADDRESS 7500 JEFFERSON NE

PROJECT & APP # 1003429/07DRB00002

PROJECT NAME SIERRA RANCH SUBD. UNIT

$ 20.00 **441032/3424000 Conflict Management Fee**

$ _____ **441006/4983000 DRB Actions**

$ _____ **441006/4971000 EPC/AA/LUCC Actions & All Appeals**

$ _____ **441018/4971000 Public Notification**

$ _____ **441006/4983000 DRAINAGE PLAN REVIEW OR TRAFFIC IMPACT STUDY*****
( )Major/Minor Subdivision ( )Site Development Plan ( )Bldg Permit
( ) Letter of Map Revision ( )Conditional Letter of Map Revision
( ) Traffic Impact Study

$ 20.00 **TOTAL AMOUNT DUE**

****NOTE**: *If a subsequent submittal is required, bring a copy of this paid receipt with you to avoid an* **additional charge.**

Counterreceipt.doc 6/21/04

City Of Albuquerque
Treasury Division

1/2/2007 10:18AM LOC: ANNX
RECEIPT# 00071381 WS# 006 TRANS# 0001
Account 441032 Fund 0110
Activity 3424000 TRSEJA
Trans Amt $20.00
J24 Misc $20.00
VI $20.00
CHANGE $0.00

Thank You

N

200 100 0 200

1" = 200'

Perimeter Wall Location

GENERAL NOTES:

1. PERIMETER WALL SHALL NOT EXCEED SIX FEET IN HEIGHT ABOVE STREET GRADE.
2. PERIMETER WALL SHALL NOT EXCEED EIGHT FEET IN HEIGHT ABOVE STREET GRADE IN ORDER TO RETAIN HIGHER GROUND ON THE PRIVATE PROPERTY SIDE.

KEYED NOTES:

(A) — (F) SEE ATTACHED DETAIL SHEETS.

Perimeter Wall Approved

DRB Chair

1/26/05

Date

Perimeter Wall Exhibit

DRB #

Subdivision Name: Sierra Ranch Subdivision

Zone Atlas Page: N-8

Nearest Intersection: Gibson Blvd. and Messina Drive

December, 2004

Approved: _____

P:\050188\cdp\general\Exhibits\Wall_Submittal_overall.dwg
January 20, 2005 - 3:31pm

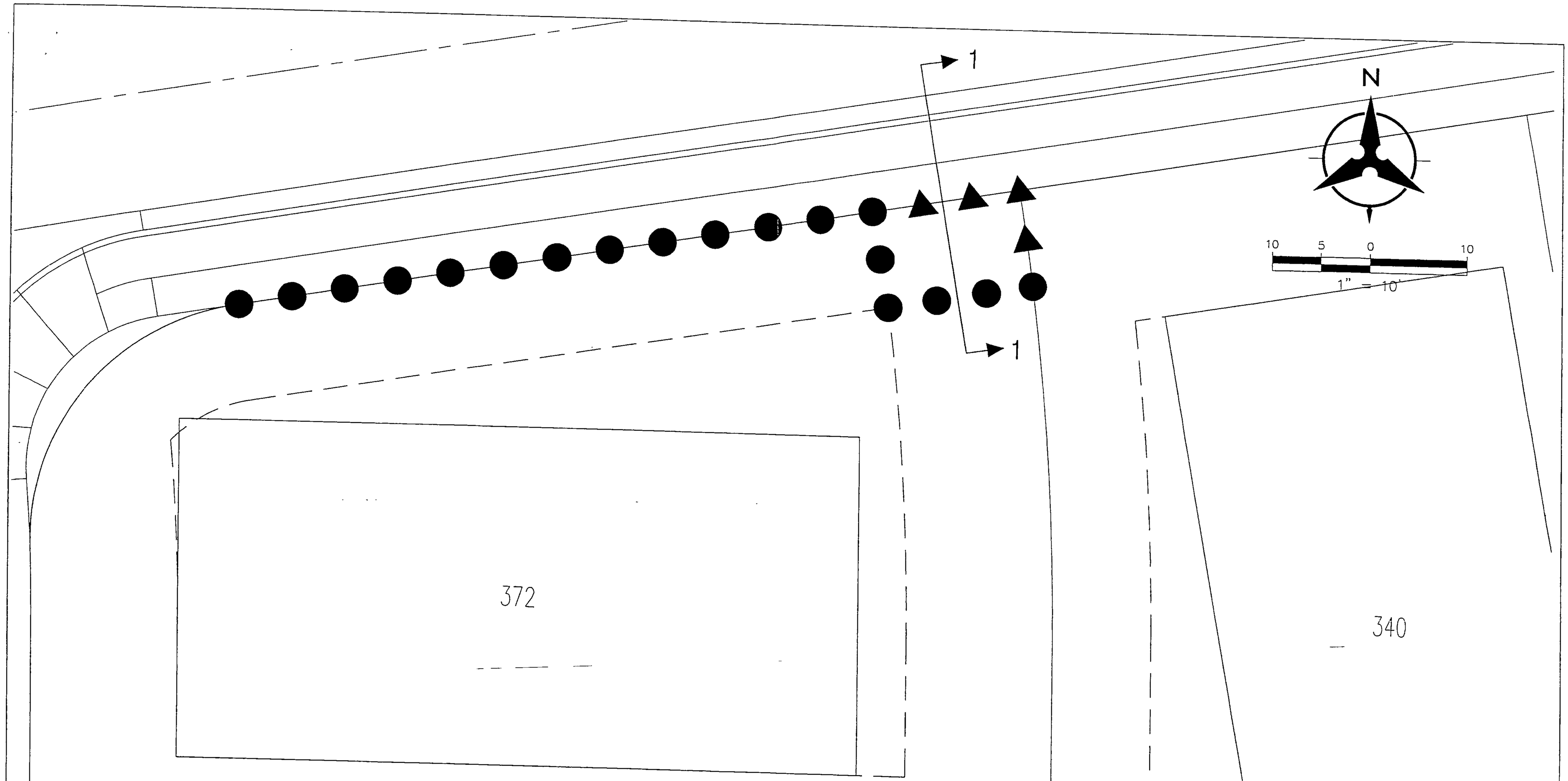

NOTE: WALL HEIGHTS ARE FROM STREET SIDE GRADE TO TOP OF WALL

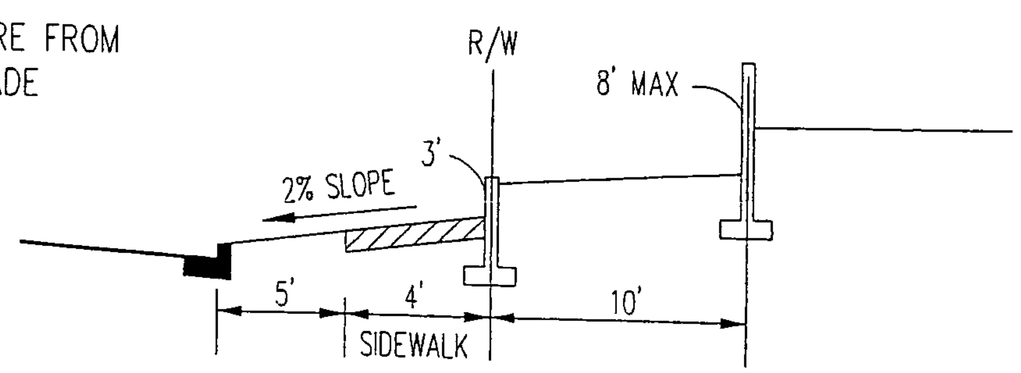

SECTION 1-1

REAR / SIDE WALL DETAIL (A)

LEGEND

- PROPOSED CURB & GUTTER
- SETBACK
- 6' MAX PERIMITER WALL
- 3' MAX RETAINING WALL
- 8' MAX PERIMETER/RETAINING WALL

P:\050188\cdp\general\Exhibits\Wall_Exhibits\A.dwg
January 20, 2005 - 8:15am

366

365

N

10 5 0 10

1" = 10'

1

1

NOTE: WALL HEIGHTS ARE FROM STREET SIDE GRADE TO TOP OF WALL

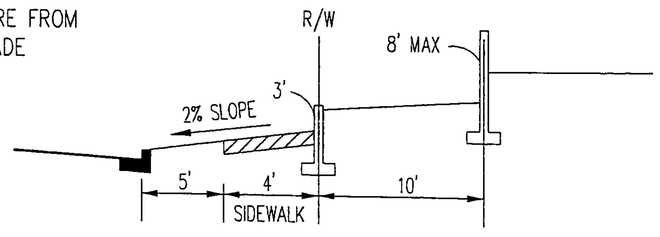

SECTION 1-1

REAR / SIDE WALL DETAIL (B)

P:\050188\cdp\general\Exhibits\Wall_Exhibits\B.dwg
January 20, 2005 - 8:13am

LEGEND

- PROPOSED CURB & GUTTER
- SETBACK
- 6' MAX PERIMITER WALL
- 3' MAX RETAINING WALL
- 8' MAX PERIMETER/RETAINING WALL

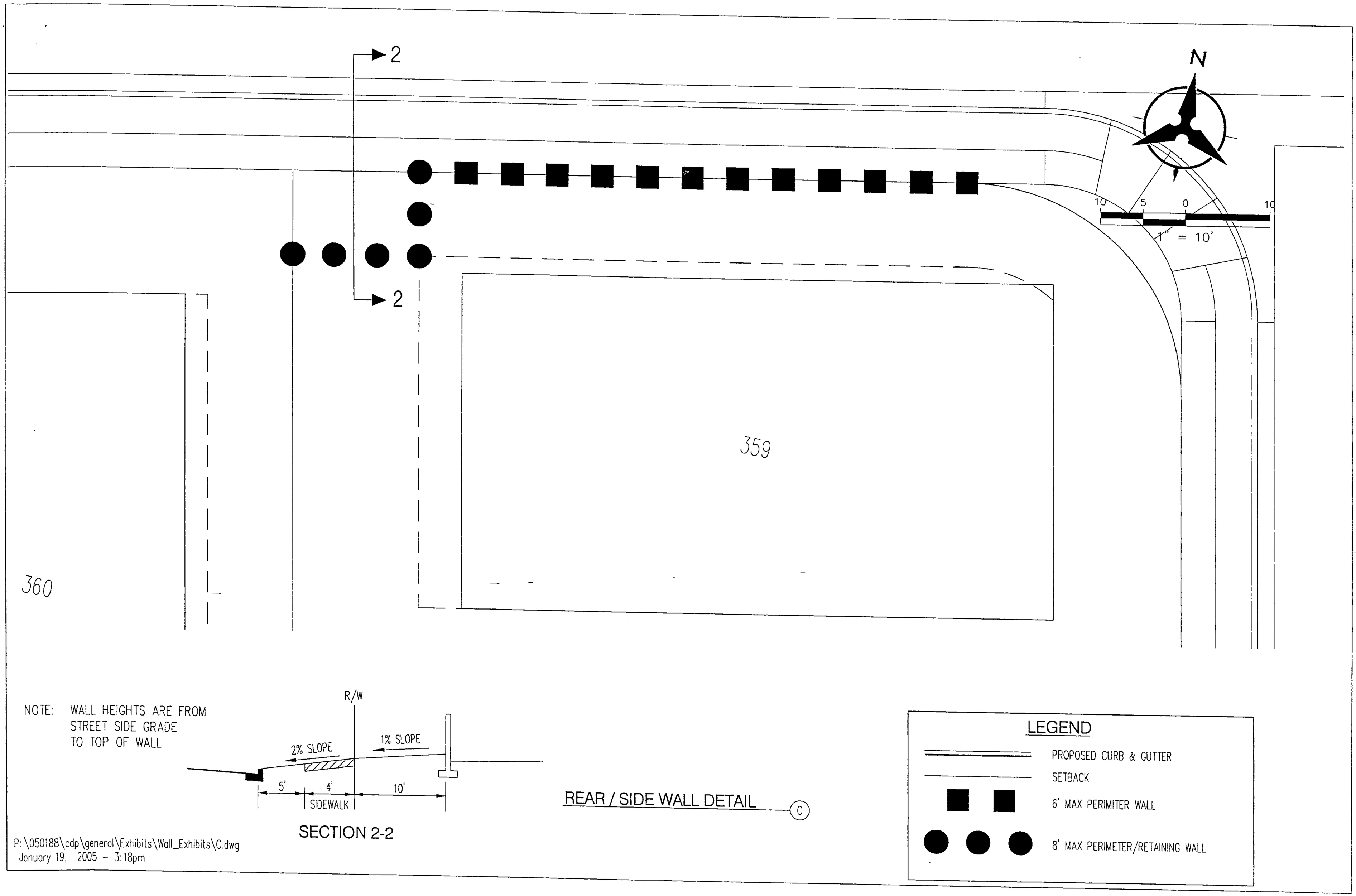

NOTE: WALL HEIGHTS ARE FROM STREET SIDE GRADE TO TOP OF WALL

SECTION 2-2

REAR / SIDE WALL DETAIL (C)

LEGEND

- PROPOSED CURB & GUTTER
- SETBACK
- 6' MAX PERIMITER WALL
- 8' MAX PERIMETER/RETAINING WALL

P:\050188\cdp\general\Exhibits\Wall_Exhibits\C.dwg
January 19, 2005 - 3:18pm

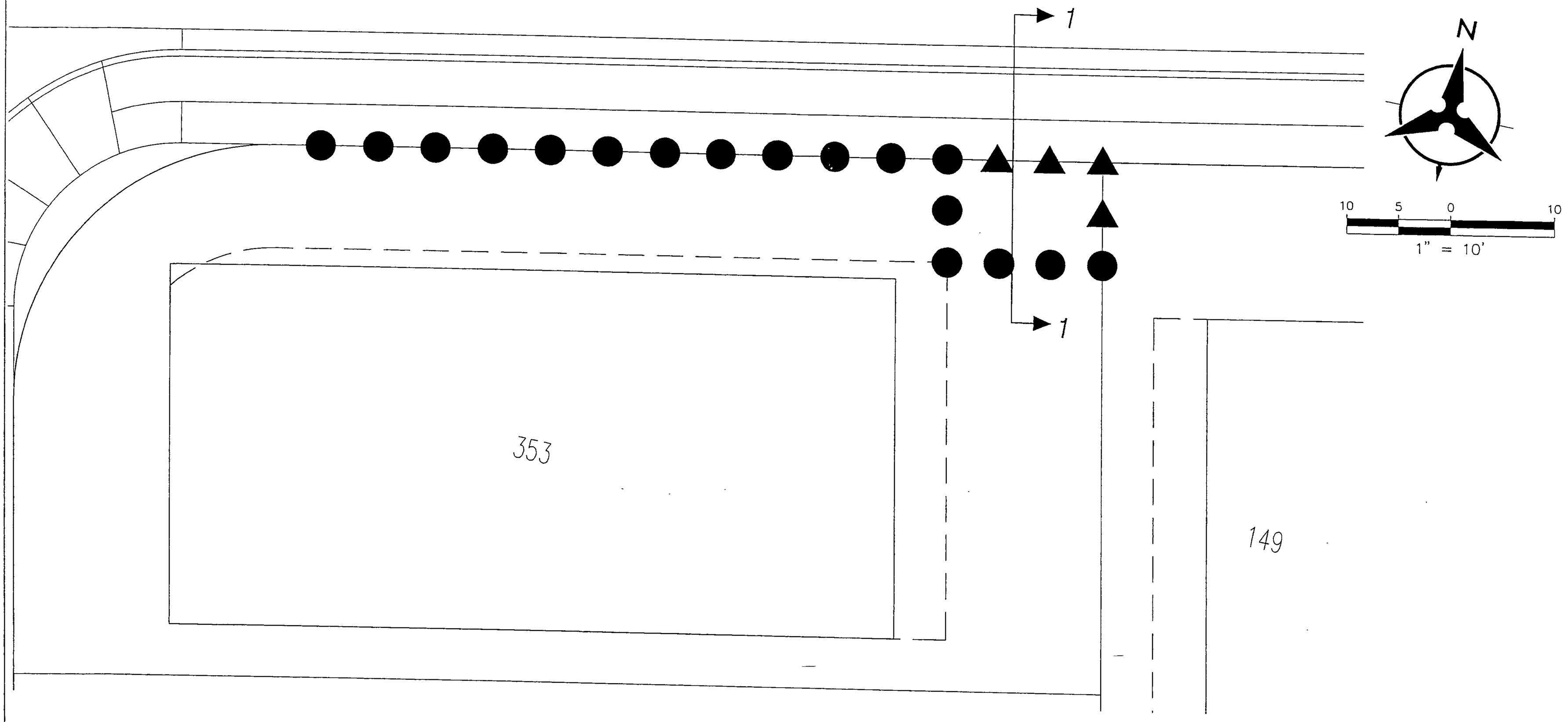

NOTE: WALL HEIGHTS ARE FROM STREET SIDE GRADE TO TOP OF WALL

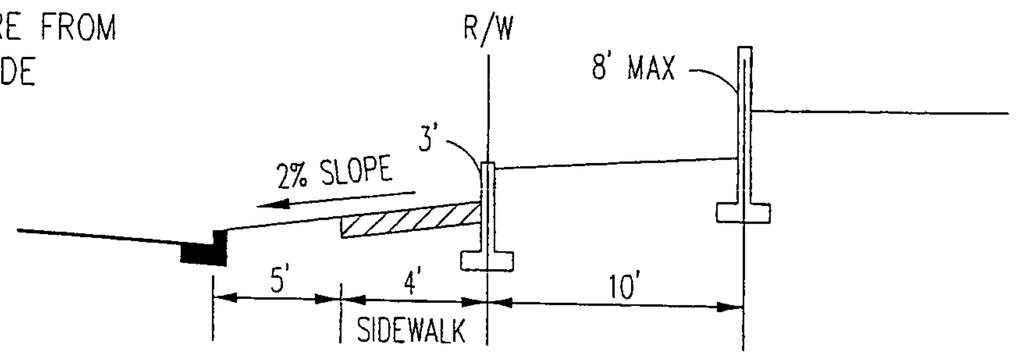

SECTION 1-1

REAR / SIDE WALL DETAIL (D)

P:\050188\cdp\general\Exhibits\Wall_Exhibits\D.dwg
January 20, 2005 - 8:13am

LEGEND

- PROPOSED CURB & GUTTER
- SETBACK
- 6' MAX PERIMITER WALL
- 3' MAX RETAINING WALL
- 8' MAX PERIMETER/RETAINING WALL

356

N

10 5 0 10

1" = 10'

1

1

NOTE: WALL HEIGHTS ARE FROM STREET SIDE GRADE TO TOP OF WALL

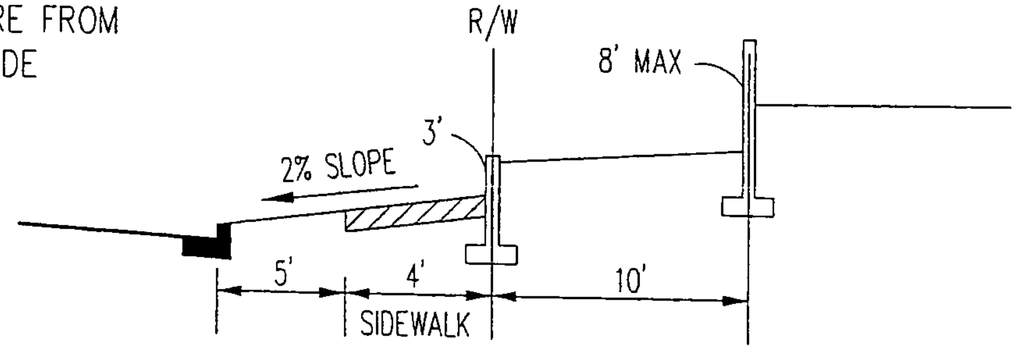

SECTION 1-1

REAR / SIDE WALL DETAIL (E)

LEGEND

PROPOSED CURB & GUTTER

SETBACK

6' MAX PERIMITER WALL

3' MAX RETAINING WALL

8' MAX PERIMETER/RETAINING WALL

P:\050188\cdp\general\Exhibits\Wall_Exhibits\E.dwg
January 20, 2005 - 8:10am

184

183

N

10 5 0 10

1" = 10'

2

2

NOTE: WALL HEIGHTS ARE FROM STREET SIDE GRADE TO TOP OF WALL

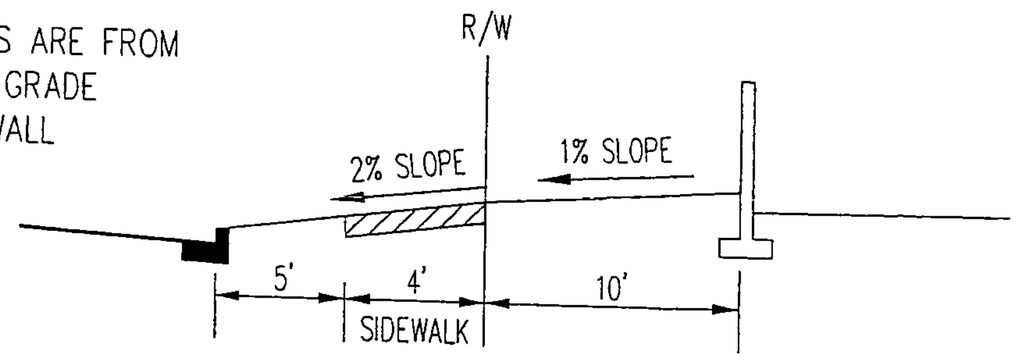

SECTION 2-2

REAR / SIDE WALL DETAIL (F)

LEGEND

- PROPOSED CURB & GUTTER
- SETBACK
- 6' MAX PERIMITER WALL
- 8' MAX PERIMETER/RETAINING WALL

P:\050188\cdp\general\Exhibits\Wall_Exhibits\F.dwg
January 19, 2005 - 3:19pm

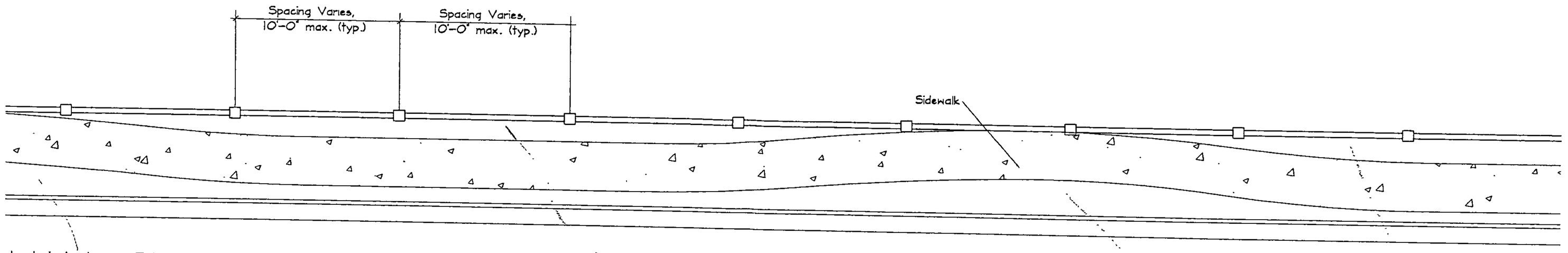

WALL PLAN

SCALE: None

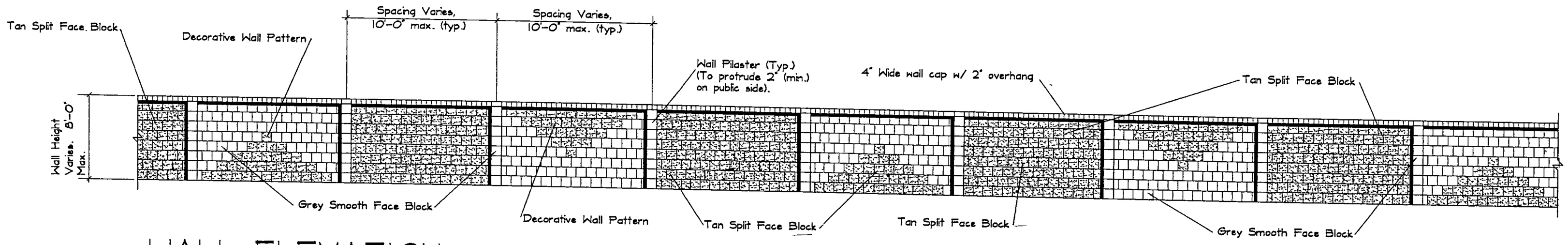

WALL ELEVATION

SCALE: None

P:\050188\cdp\general\Exhibits\Wall_submittal.dwg
December 16, 2004 - 1:22pm

Approved: _____

DRB #

Subdivision Name: Sierra Ranch Subdivision

Zone Atlas Page: N-8

Nearest Intersection: Gibson Blvd. and Messina Drive

December, 2004

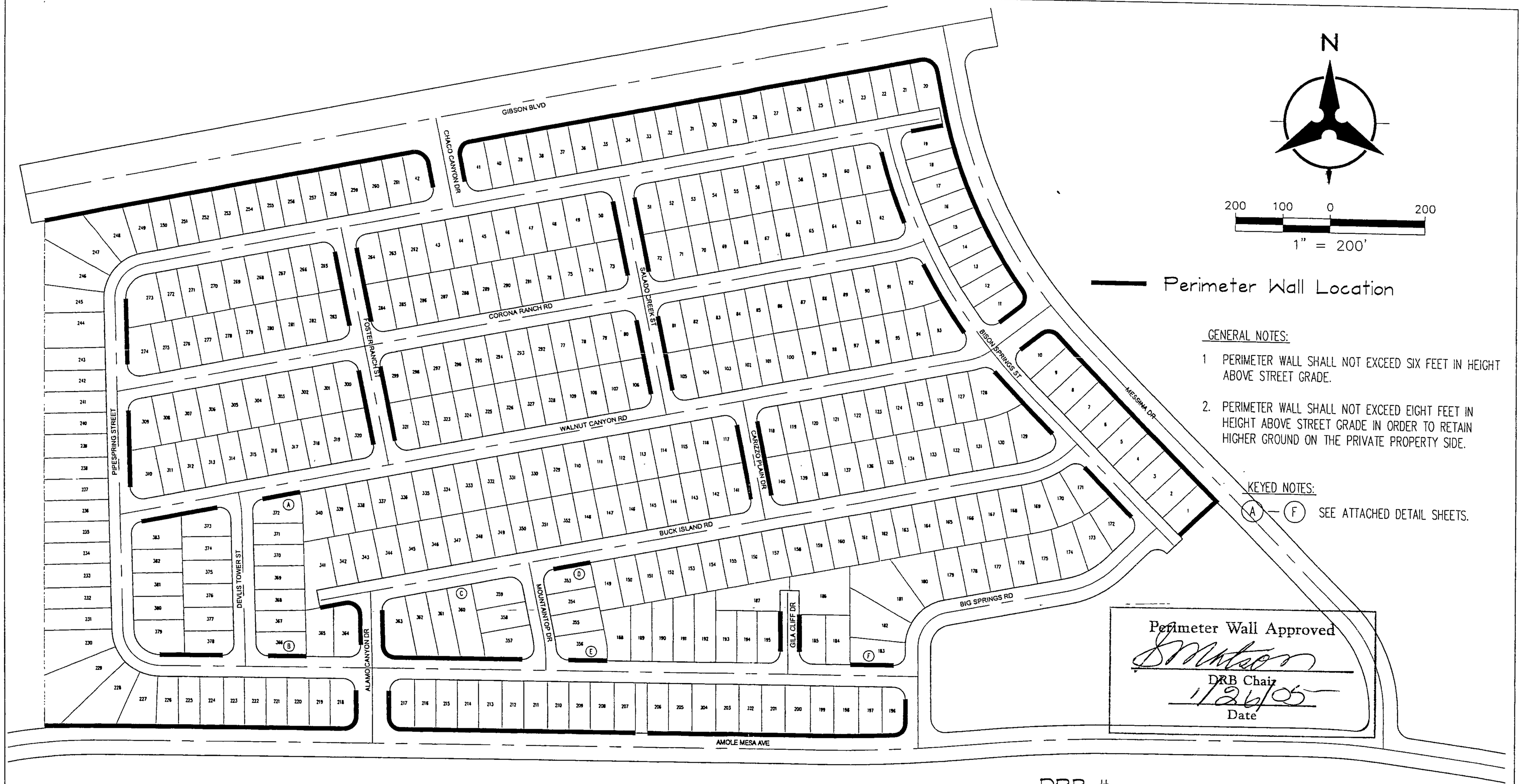

GENERAL NOTES:

1 PERIMETER WALL SHALL NOT EXCEED SIX FEET IN HEIGHT ABOVE STREET GRADE.

2. PERIMETER WALL SHALL NOT EXCEED EIGHT FEET IN HEIGHT ABOVE STREET GRADE IN ORDER TO RETAIN HIGHER GROUND ON THE PRIVATE PROPERTY SIDE.

KEYED NOTES:

(A) — (F) SEE ATTACHED DETAIL SHEETS.

Perimeter Wall Approved

DRB Chair

1/26/05
Date

Perimeter Wall Exhibit

DRB #

Subdivision Name: Sierra Ranch Subdivision

Zone Atlas Page: N-8

Nearest Intersection: Gibson Blvd. and Messina Drive

December, 2004

Approved:_____

P:\050188\cdp\general\Exhibits\Wall_Submittal_overall.dwg
January 20, 2005 - 3:31pm

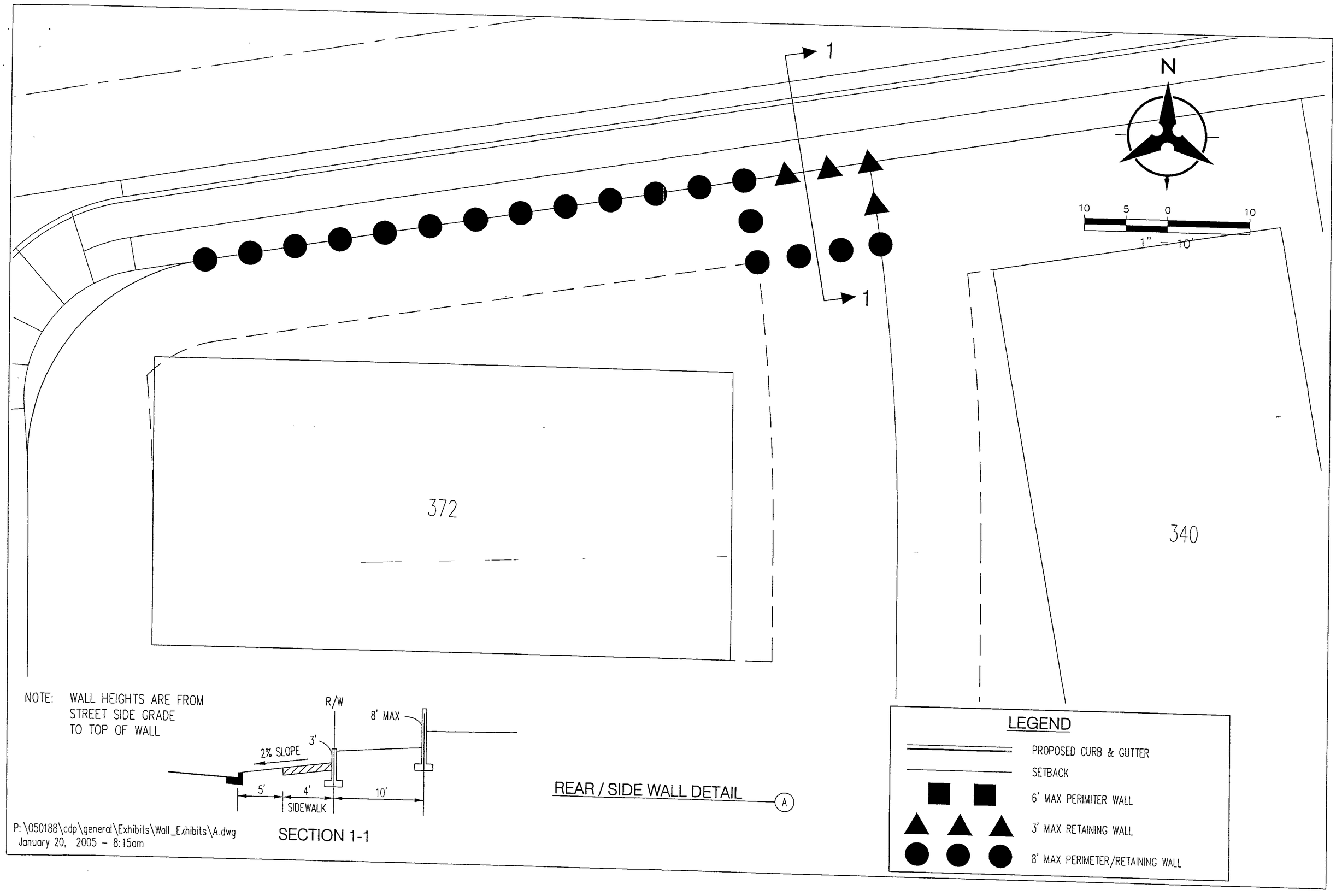

NOTE: WALL HEIGHTS ARE FROM STREET SIDE GRADE TO TOP OF WALL

SECTION 1-1

REAR / SIDE WALL DETAIL (A)

LEGEND

- PROPOSED CURB & GUTTER
- SETBACK
- 6' MAX PERIMITER WALL
- 3' MAX RETAINING WALL
- 8' MAX PERIMETER/RETAINING WALL

P:\050188\cdp\general\Exhibits\Wall_Exhibits\A.dwg
January 20, 2005 - 8:15am

366

365

N

10 5 0 10

1" = 10'

1

1

NOTE: WALL HEIGHTS ARE FROM STREET SIDE GRADE TO TOP OF WALL

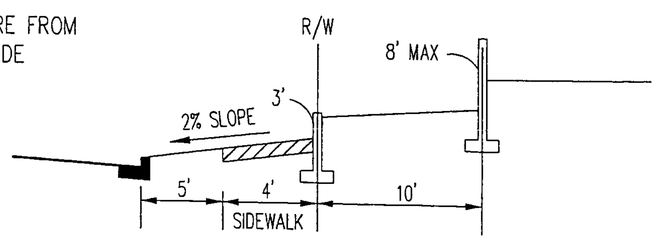

SECTION 1-1

REAR / SIDE WALL DETAIL (B)

LEGEND

PROPOSED CURB & GUTTER

SETBACK

6' MAX PERIMITER WALL

3' MAX RETAINING WALL

8' MAX PERIMETER/RETAINING WALL

P: \050188\cdp\general\Exhibits\Wall_Exhibits\B.dwg
January 20, 2005 - 8:13am

2

2

N

10 5 0 10

1" = 10'

359

360

NOTE: WALL HEIGHTS ARE FROM STREET SIDE GRADE TO TOP OF WALL

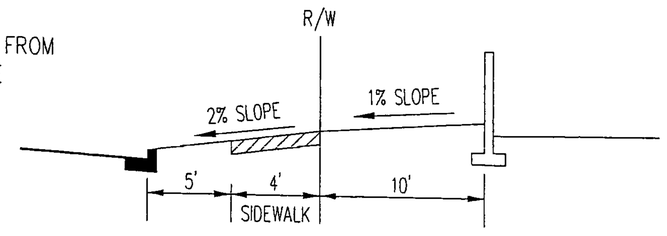

SECTION 2-2

REAR / SIDE WALL DETAIL (C)

LEGEND

- PROPOSED CURB & GUTTER
- SETBACK
- 6' MAX PERIMITER WALL
- 8' MAX PERIMETER/RETAINING WALL

P:\050188\cdp\general\Exhibits\Wall_Exhibits\C.dwg
January 19, 2005 - 3:18pm

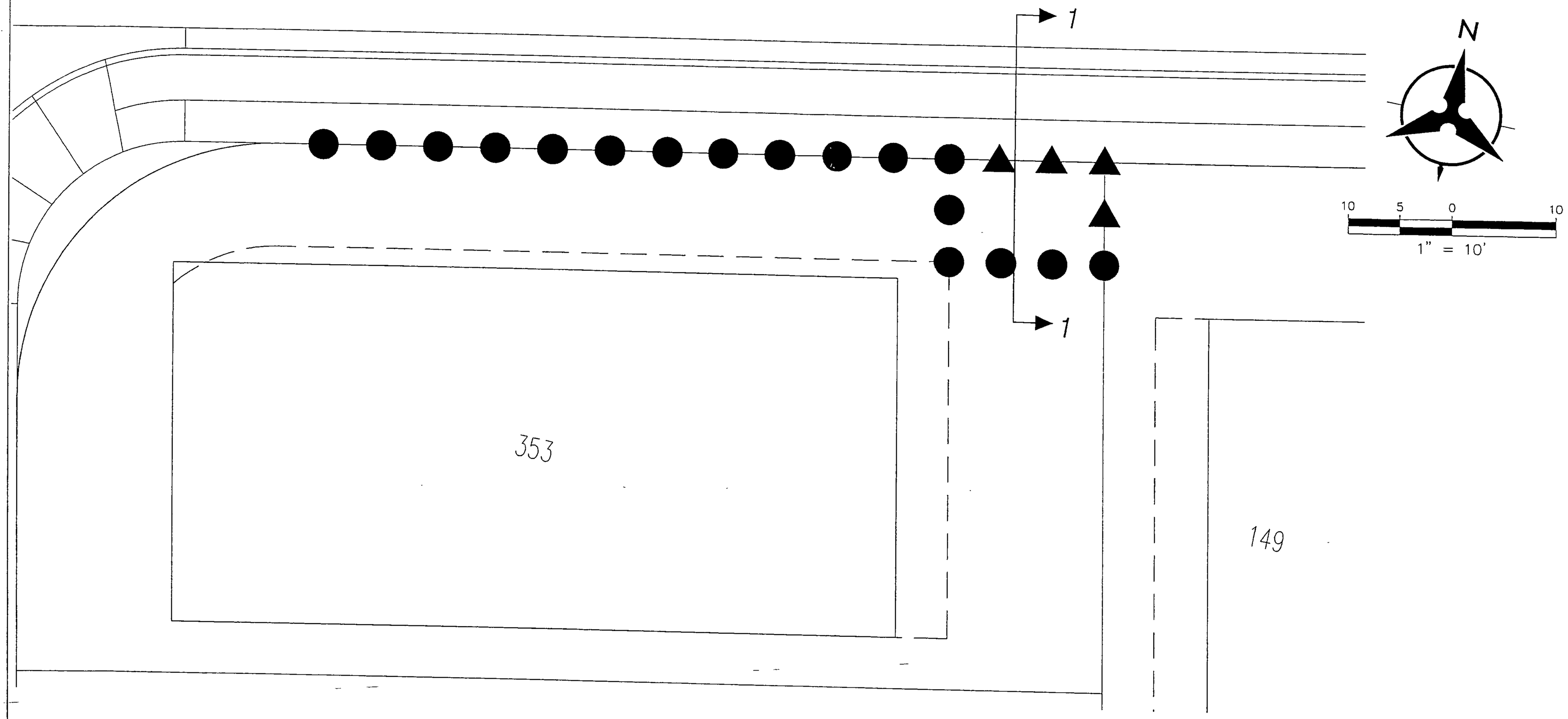

NOTE: WALL HEIGHTS ARE FROM STREET SIDE GRADE TO TOP OF WALL

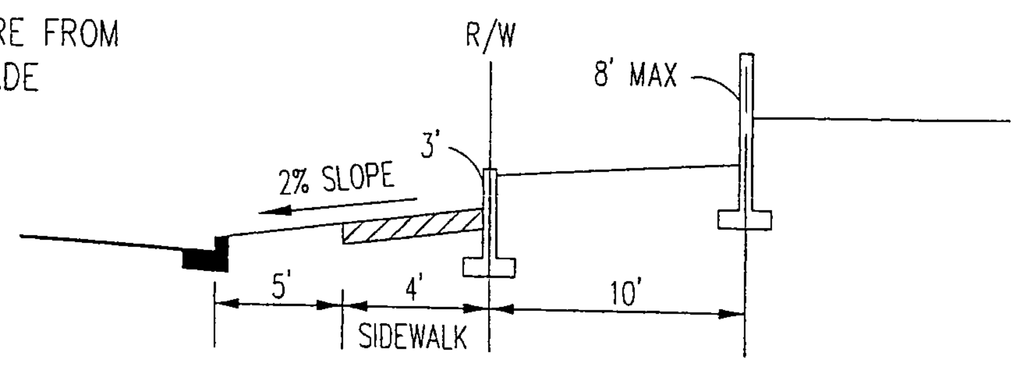

SECTION 1-1

REAR / SIDE WALL DETAIL (D)

LEGEND

- PROPOSED CURB & GUTTER
- SETBACK
- 6' MAX PERIMITER WALL
- 3' MAX RETAINING WALL
- 8' MAX PERIMETER/RETAINING WALL

P:\050188\cdp\general\Exhibits\Wall_Exhibits\D.dwg
January 20, 2005 - 8:13am

356

N

10 5 0 10

1" = 10'

1

1

NOTE: WALL HEIGHTS ARE FROM STREET SIDE GRADE TO TOP OF WALL

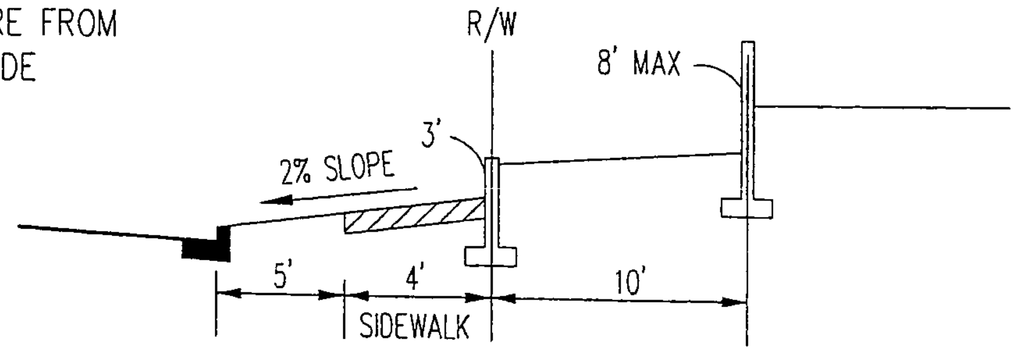

SECTION 1-1

REAR / SIDE WALL DETAIL (E)

LEGEND

PROPOSED CURB & GUTTER

SETBACK

6' MAX PERIMITER WALL

3' MAX RETAINING WALL

8' MAX PERIMETER/RETAINING WALL

P:\050188\cdp\general\Exhibits\Wall_Exhibits\E.dwg
January 20, 2005 - 8:10am

184

183

N

10 5 0 10

1" = 10'

2

2

NOTE: WALL HEIGHTS ARE FROM STREET SIDE GRADE TO TOP OF WALL

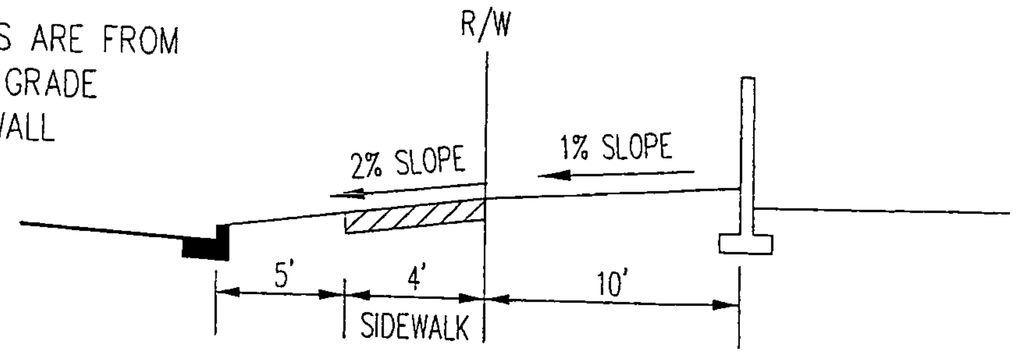

SECTION 2-2

REAR / SIDE WALL DETAIL (F)

P:\050188\cdp\general\Exhibits\Wall_Exhibits\F.dwg
January 19, 2005 - 3:19pm

LEGEND

PROPOSED CURB & GUTTER

SETBACK

6' MAX PERIMITER WALL

8' MAX PERIMETER/RETAINING WALL

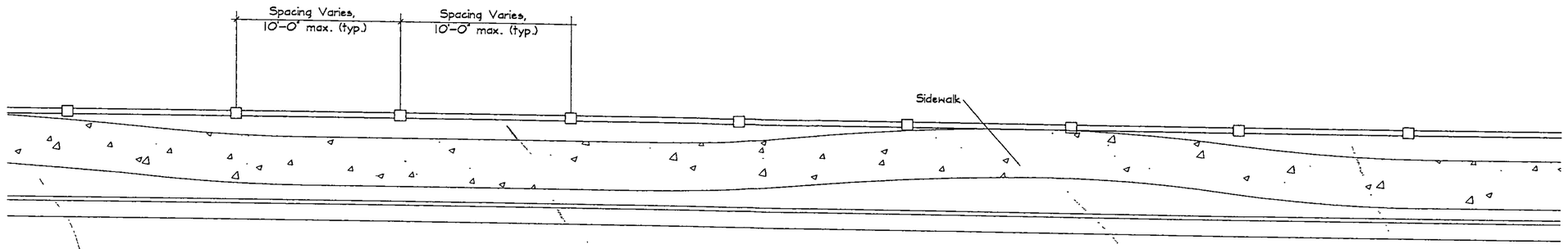

WALL PLAN

SCALE: None

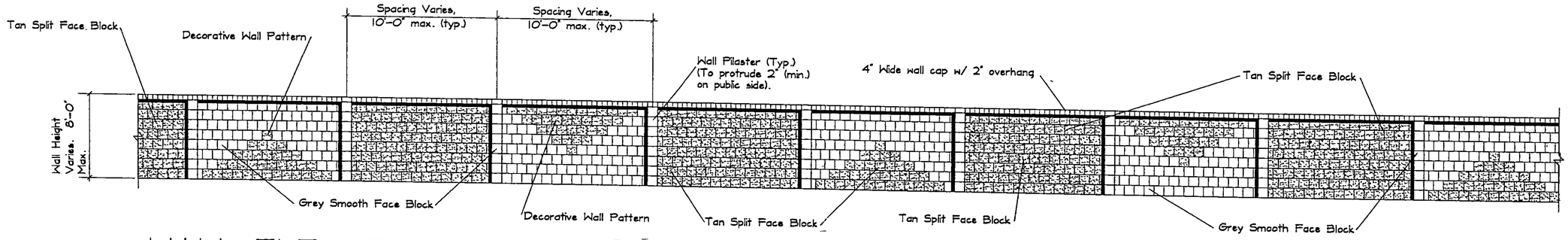

WALL ELEVATION

SCALE: None

P:\050188\cdp\general\Exhibits\Wall_submittal.dwg
December 16, 2004 - 1:22pm

Approved: _____

DRB #

Subdivision Name: Sierra Ranch Subdivision

Zone Atlas Page: N-8

Nearest Intersection: Gibson Blvd. and Messina Drive

December, 2004

Perimeter Wall Exhibit

P:\050188\cdp\general\Exhibits\Wall_Submittal_overall.dwg
January 20, 2005 - 3:31pm

Approved: _____

DRB #

Subdivision Name: Sierra Ranch Subdivision

Zone Atlas Page: N-8

Nearest Intersection: Gibson Blvd. and Messina Drive

December, 2004

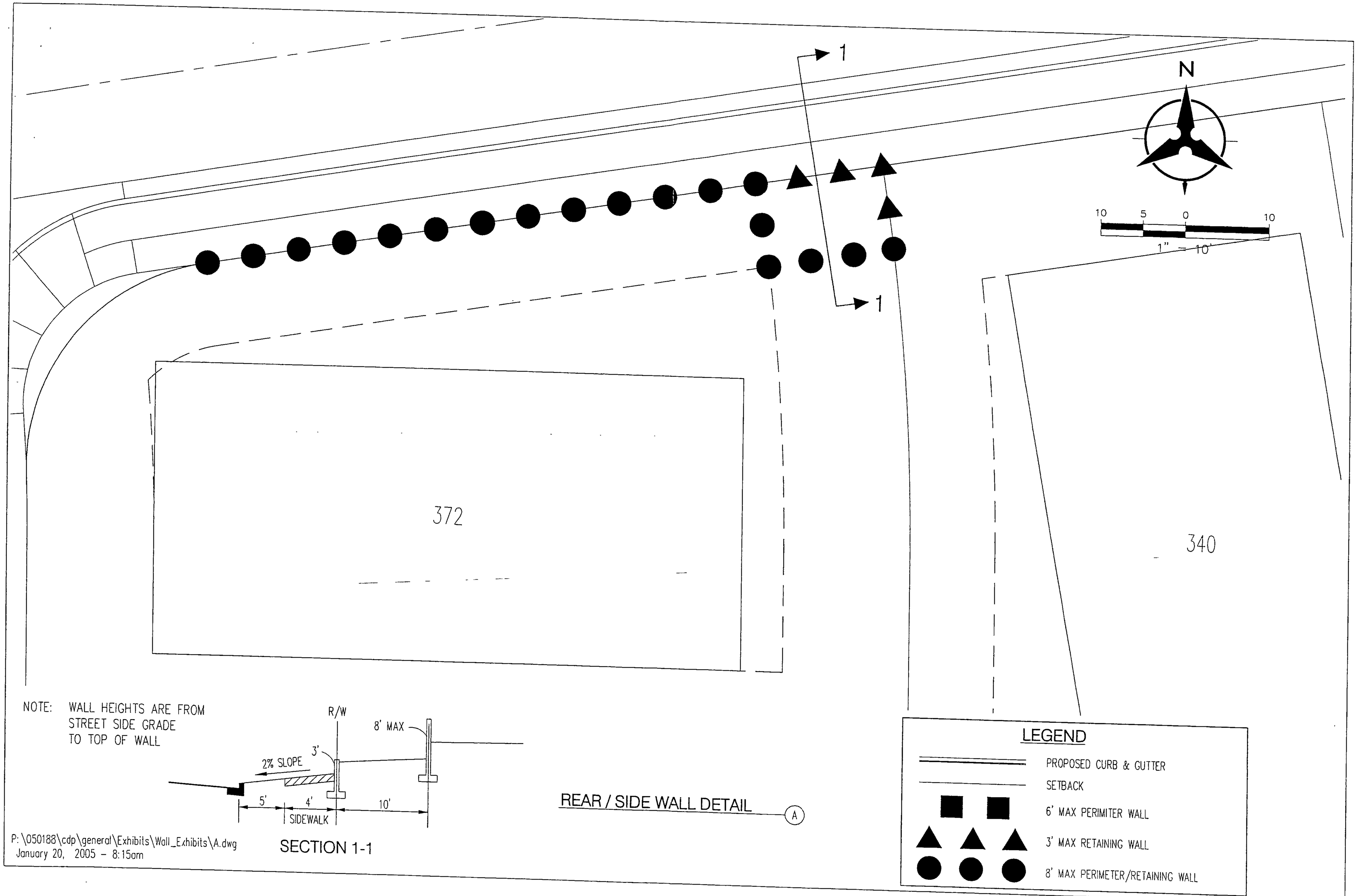

NOTE: WALL HEIGHTS ARE FROM STREET SIDE GRADE TO TOP OF WALL

SECTION 1-1

REAR / SIDE WALL DETAIL (A)

LEGEND

- PROPOSED CURB & GUTTER
- SETBACK
- 6' MAX PERIMITER WALL
- 3' MAX RETAINING WALL
- 8' MAX PERIMETER/RETAINING WALL

P:\050188\cdp\general\Exhibits\Wall_Exhibits\A.dwg
January 20, 2005 - 8:15am

366

365

N

10 5 0 10

1" = 10'

1

1

NOTE: WALL HEIGHTS ARE FROM STREET SIDE GRADE TO TOP OF WALL

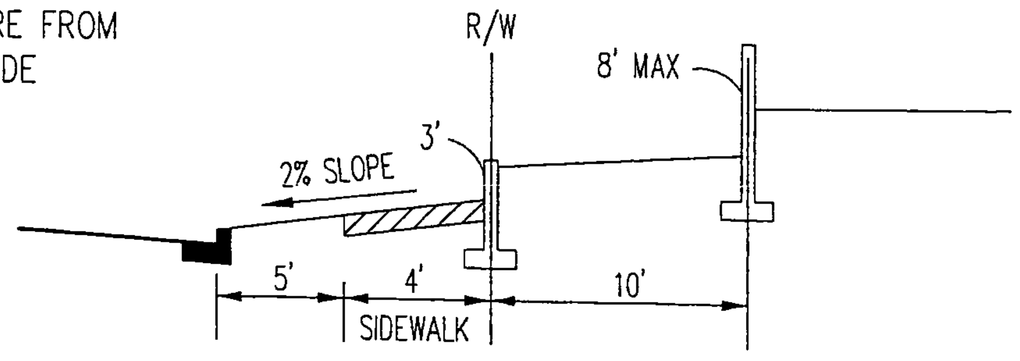

SECTION 1-1

REAR / SIDE WALL DETAIL (B)

LEGEND

PROPOSED CURB & GUTTER

SETBACK

6' MAX PERIMITER WALL

3' MAX RETAINING WALL

8' MAX PERIMETER/RETAINING WALL

P:\050188\cdp\general\Exhibits\Wall_Exhibits\B.dwg
January 20, 2005 - 8:13am

2

2

N

10 5 0 10

1" = 10'

359

360

NOTE: WALL HEIGHTS ARE FROM STREET SIDE GRADE TO TOP OF WALL

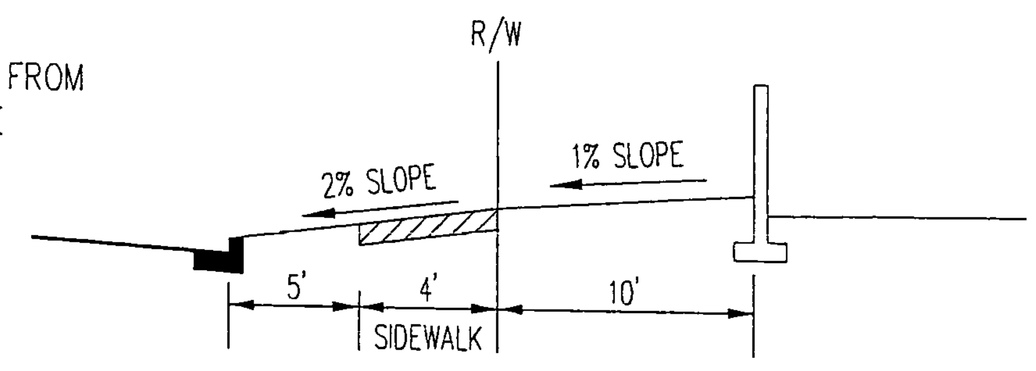

SECTION 2-2

REAR / SIDE WALL DETAIL (C)

LEGEND

- PROPOSED CURB & GUTTER
- SETBACK
- 6' MAX PERIMITER WALL
- 8' MAX PERIMETER/RETAINING WALL

P:\050188\cdp\general\Exhibits\Wall_Exhibits\C.dwg
January 19, 2005 - 3:18pm

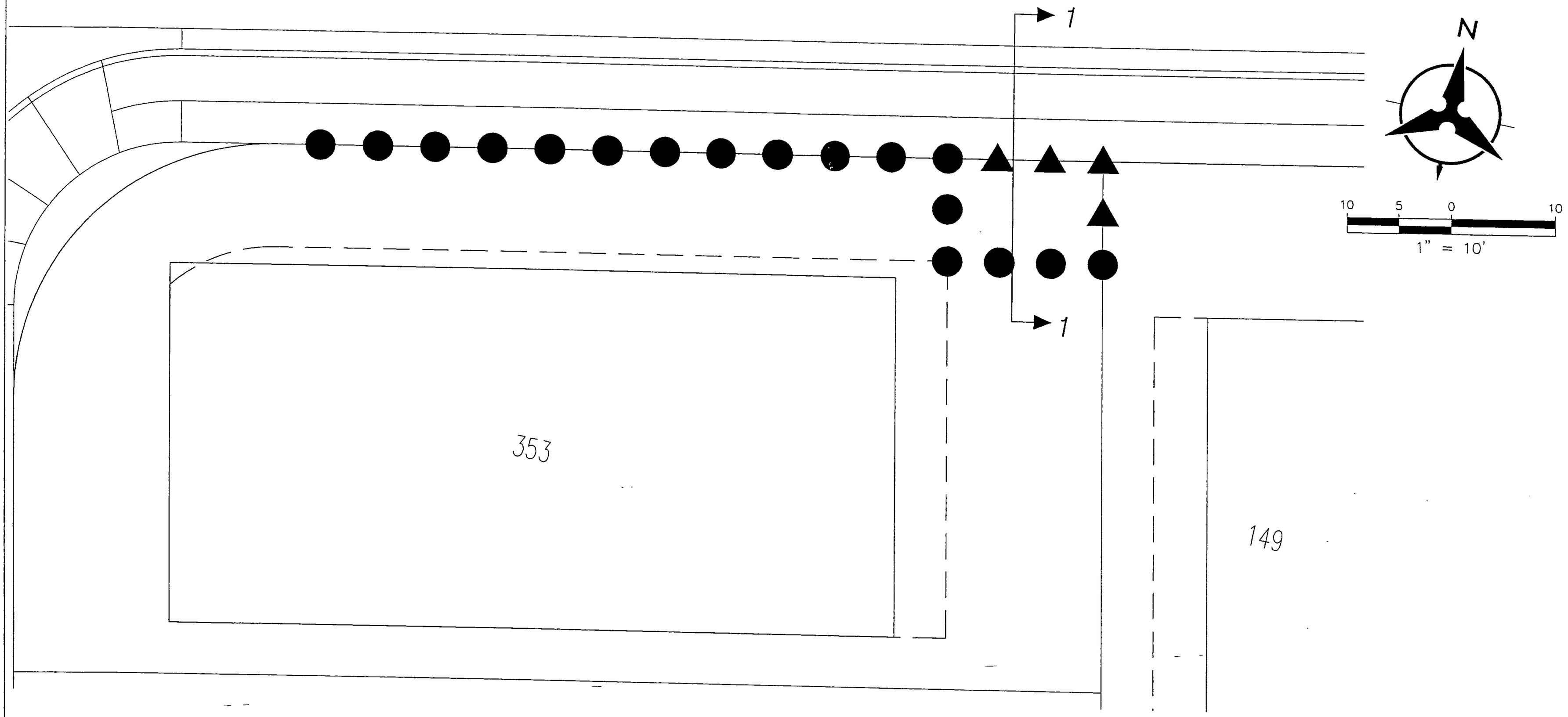

NOTE: WALL HEIGHTS ARE FROM STREET SIDE GRADE TO TOP OF WALL

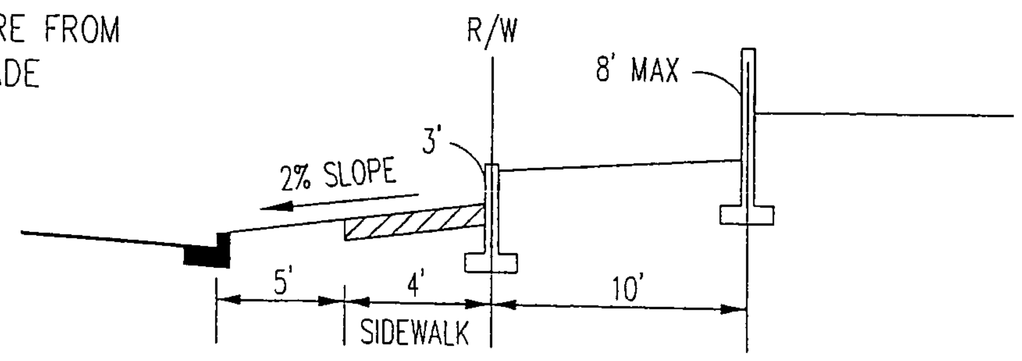

SECTION 1-1

REAR / SIDE WALL DETAIL (D)

P:\050188\cdp\general\Exhibits\Wall_Exhibits\D.dwg
January 20, 2005 - 8:13am

LEGEND

- PROPOSED CURB & GUTTER
- SETBACK
- 6' MAX PERIMITER WALL
- 3' MAX RETAINING WALL
- 8' MAX PERIMETER/RETAINING WALL

356

N

10 5 0 10

1" = 10'

1

1

NOTE: WALL HEIGHTS ARE FROM STREET SIDE GRADE TO TOP OF WALL

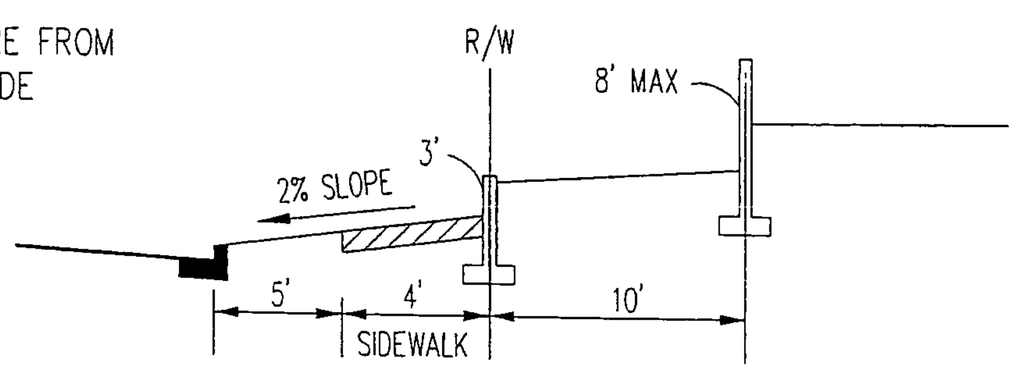

SECTION 1-1

REAR / SIDE WALL DETAIL (E)

LEGEND

PROPOSED CURB & GUTTER

SETBACK

6' MAX PERIMITER WALL

3' MAX RETAINING WALL

8' MAX PERIMETER/RETAINING WALL

P:\050188\cdp\general\Exhibits\Wall_Exhibits\E.dwg
January 20, 2005 - 8:10am

184

183

N

10 5 0 10

1" = 10'

2

2

NOTE: WALL HEIGHTS ARE FROM STREET SIDE GRADE TO TOP OF WALL

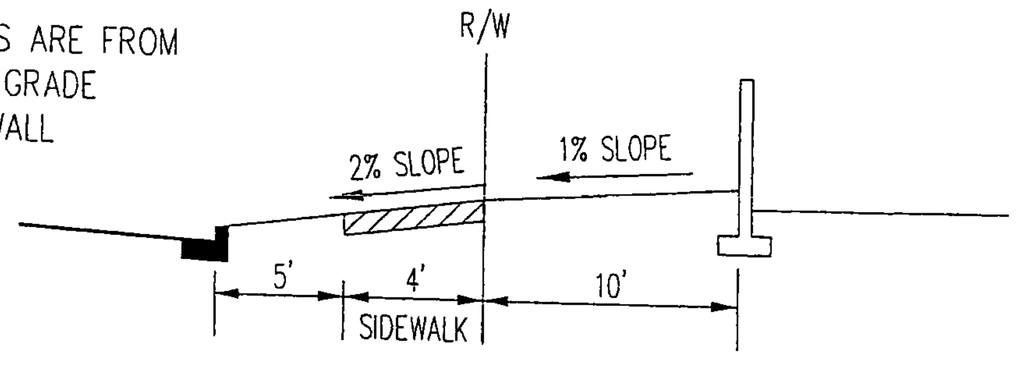

SECTION 2-2

REAR / SIDE WALL DETAIL (F)

LEGEND

PROPOSED CURB & GUTTER

SETBACK

6' MAX PERIMITER WALL

8' MAX PERIMETER/RETAINING WALL

P:\050188\cdp\general\Exhibits\Wall_Exhibits\F.dwg
January 19, 2005 - 3:19pm

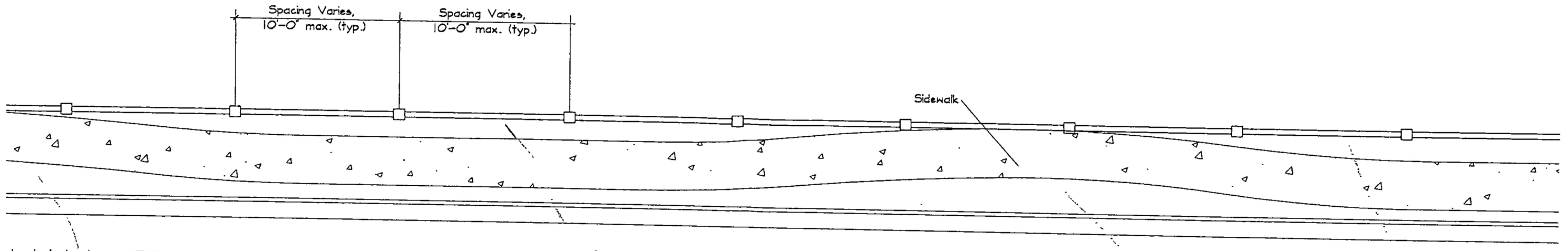

WALL PLAN

SCALE: None

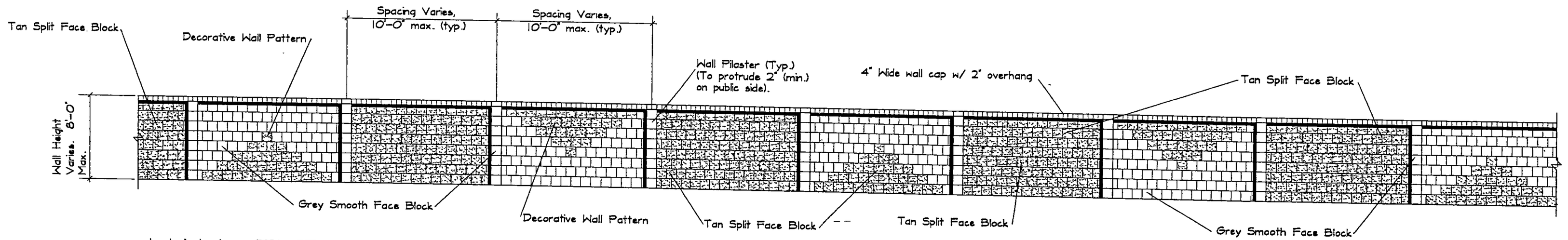

WALL ELEVATION

SCALE: None

P:\050188\cdp\general\Exhibits\Wall_submittal.dwg
December 16, 2004 - 1:22pm

Approved: _____

DRB #

Subdivision Name: Sierra Ranch Subdivision

Zone Atlas Page: N-8

Nearest Intersection: Gibson Blvd. and Messina Drive

December, 2004

Bohannan △ Huston INC.

Courtyard I
7500 Jefferson St. NE
Albuquerque, NM
87109-4335

www.bhinc.com

voice: 505.823 1000
facsimile: 505 798 7988
toll free: 800.877.5332

August 28, 2008

Jack Cloud, Chair
Development Review Board
City of Albuquerque
P.O. Box 1293
Albuquerque, New Mexico 87103

Re: Amended Perimeter Wall Exhibit and Wall Certification - Sierra Ranch Subdivision DRB# 1003429

Approved 9-16-08

Dear Jack:

We are requesting to amend the approved Perimeter Wall Exhibit for the Sierra Ranch Subdivision. The amendment removes walls originally designated as "perimeter" walls that are internal to the subdivision. Attached is a marked up copy of the approved perimeter wall exhibit showing these internal walls as being removed from the perimeter wall Exhibit.

In addition, we are enclosing the perimeter wall certification for the Sierra Ranch Subdivision. Enclosed are pictures of the perimeter walls and a marked up copy of the wall elevation to reflect what was built in the field.

Please contact me at 823-1000 if you have any questions.

Sincerely,

Scott J. Steffen, P.E.
Vice President
Community Development and Planning Group

Enclosure

cc: Rick Squires, Curb Inc.

ENGINEERING ▲
SPATIAL DATA ▲
ADVANCED TECHNOLOGIES ▲

CHACO CANYON DR

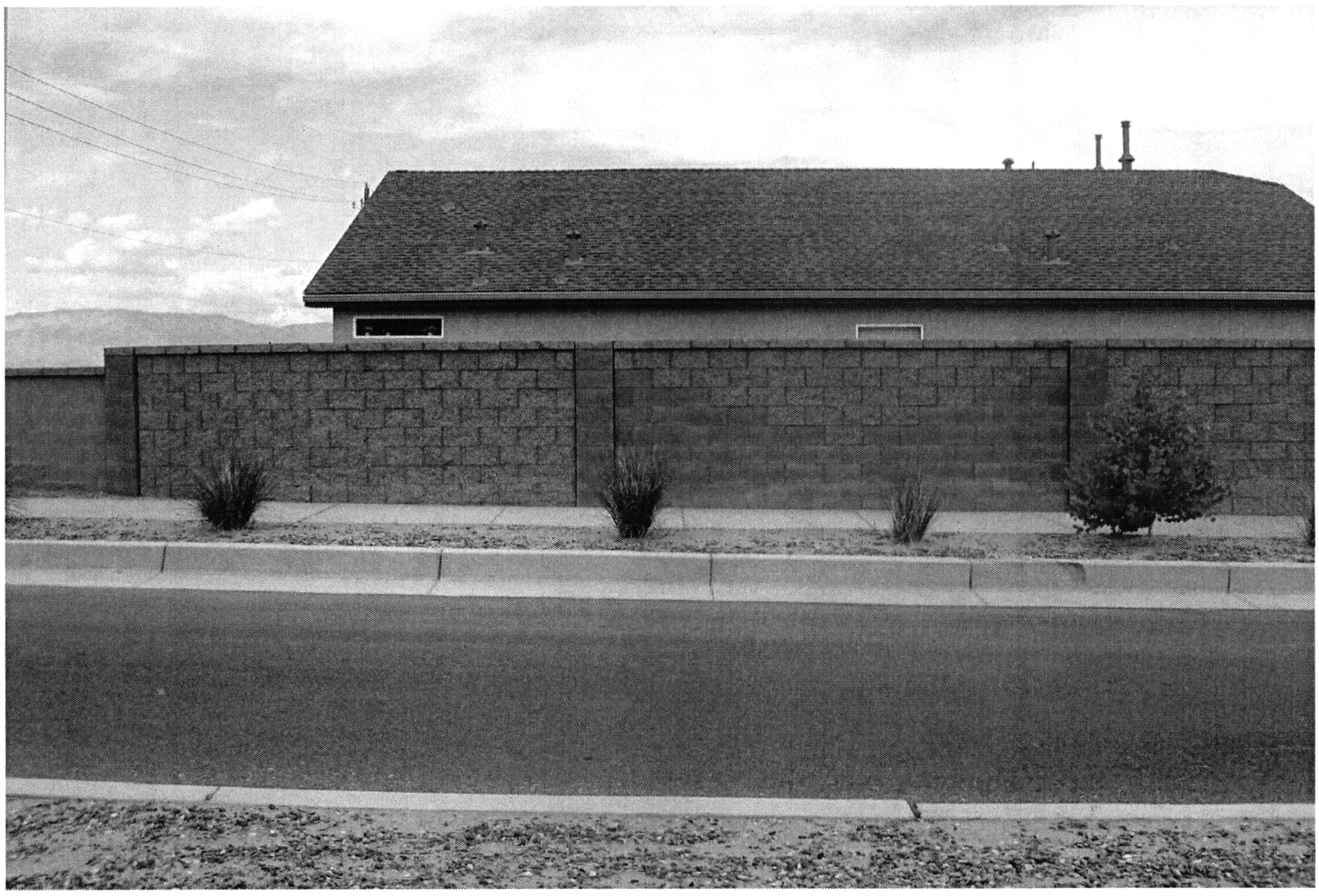

GIBSON BLVD

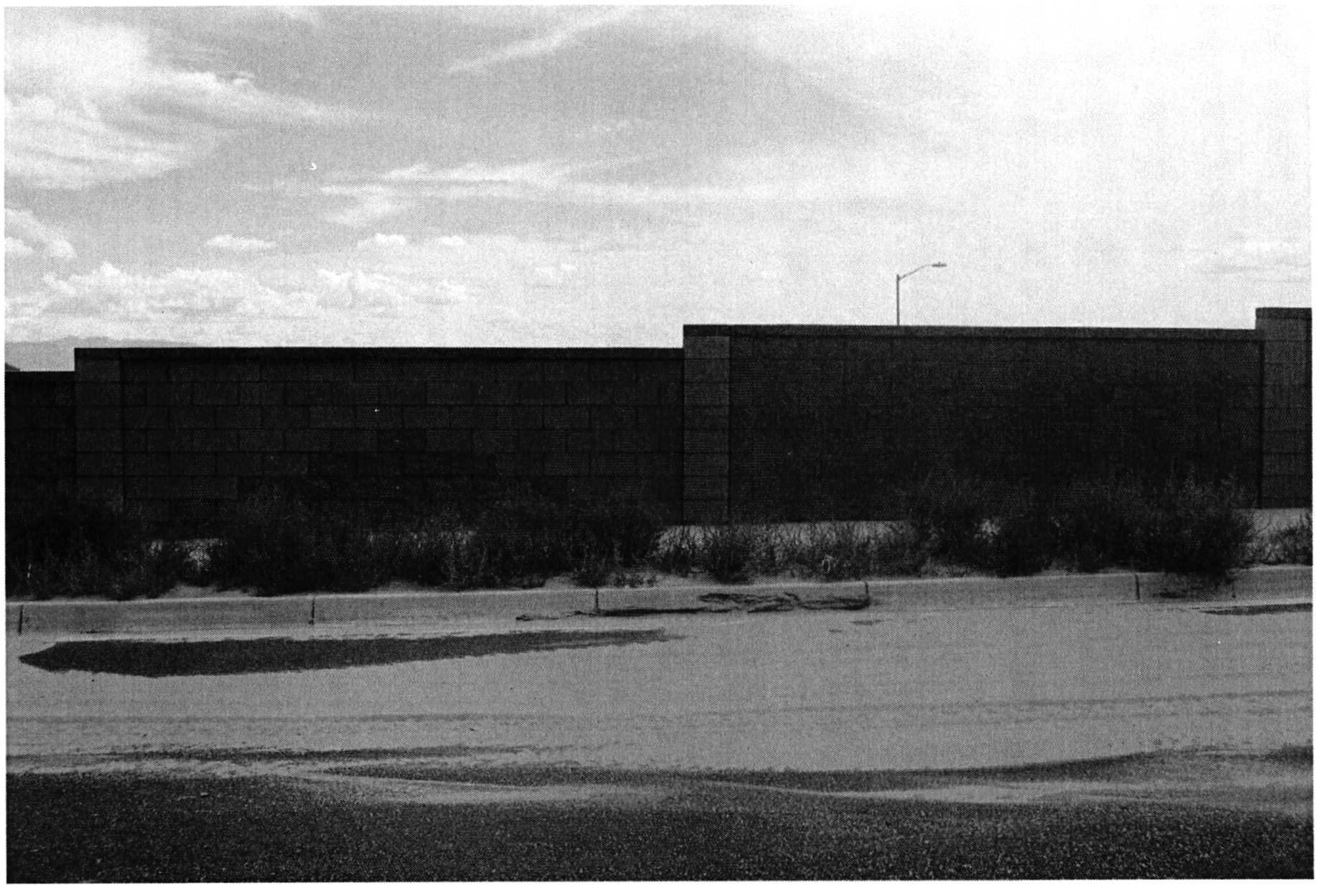

ALAMO CANYON DR

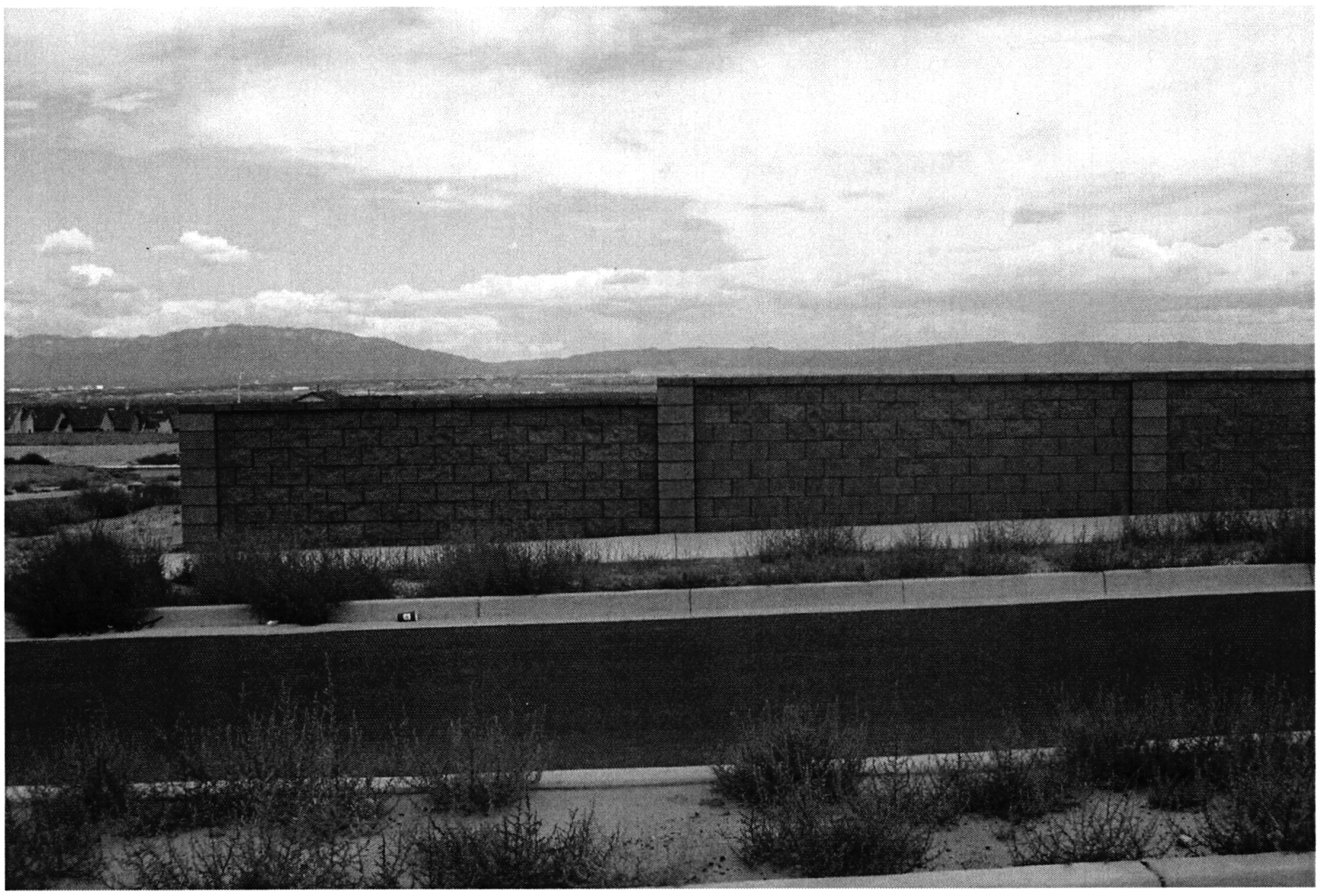

GIBSON BLVD

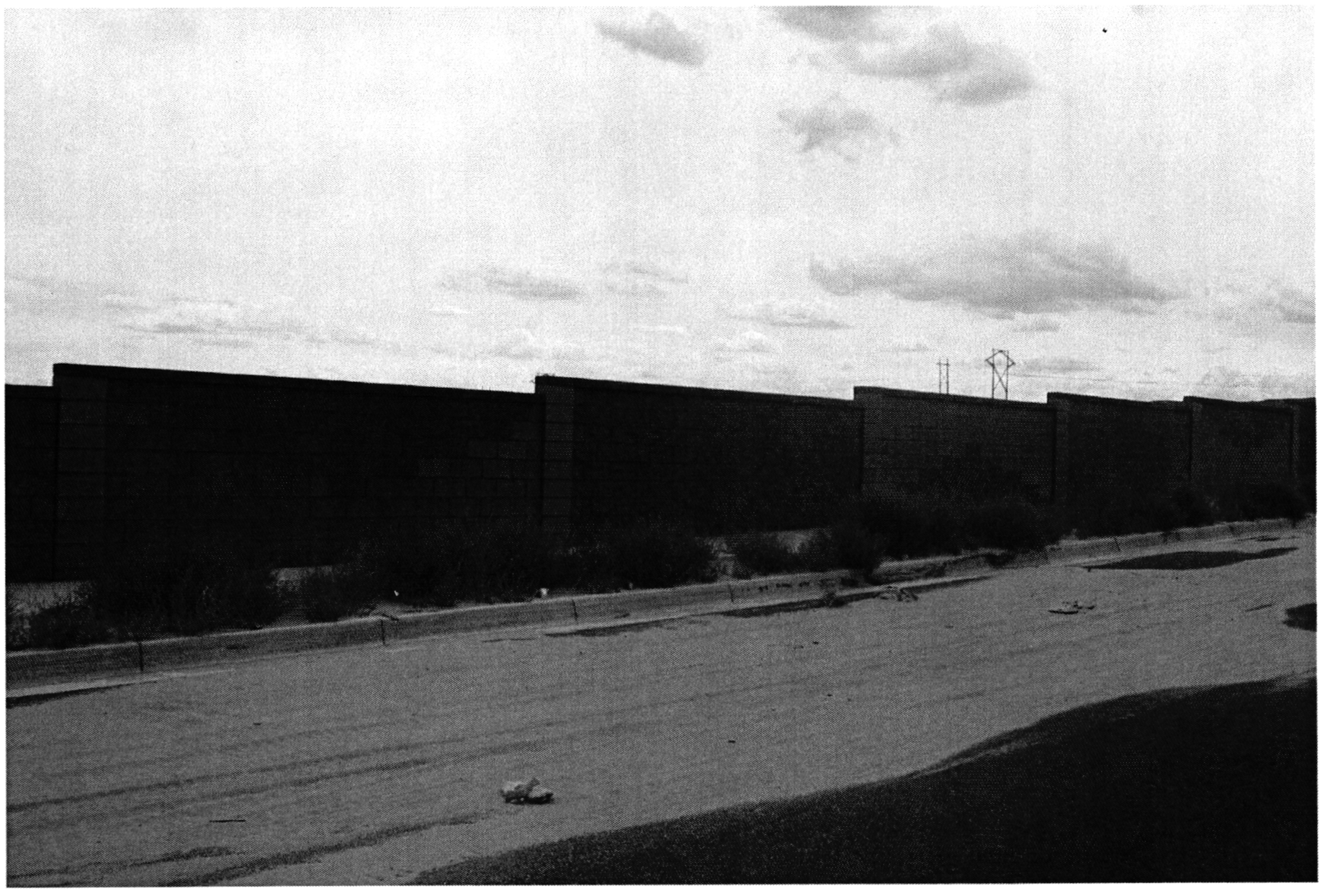

AMOLE MESA AVE

AMOLE MESA AVE

Amole Mesa Ave

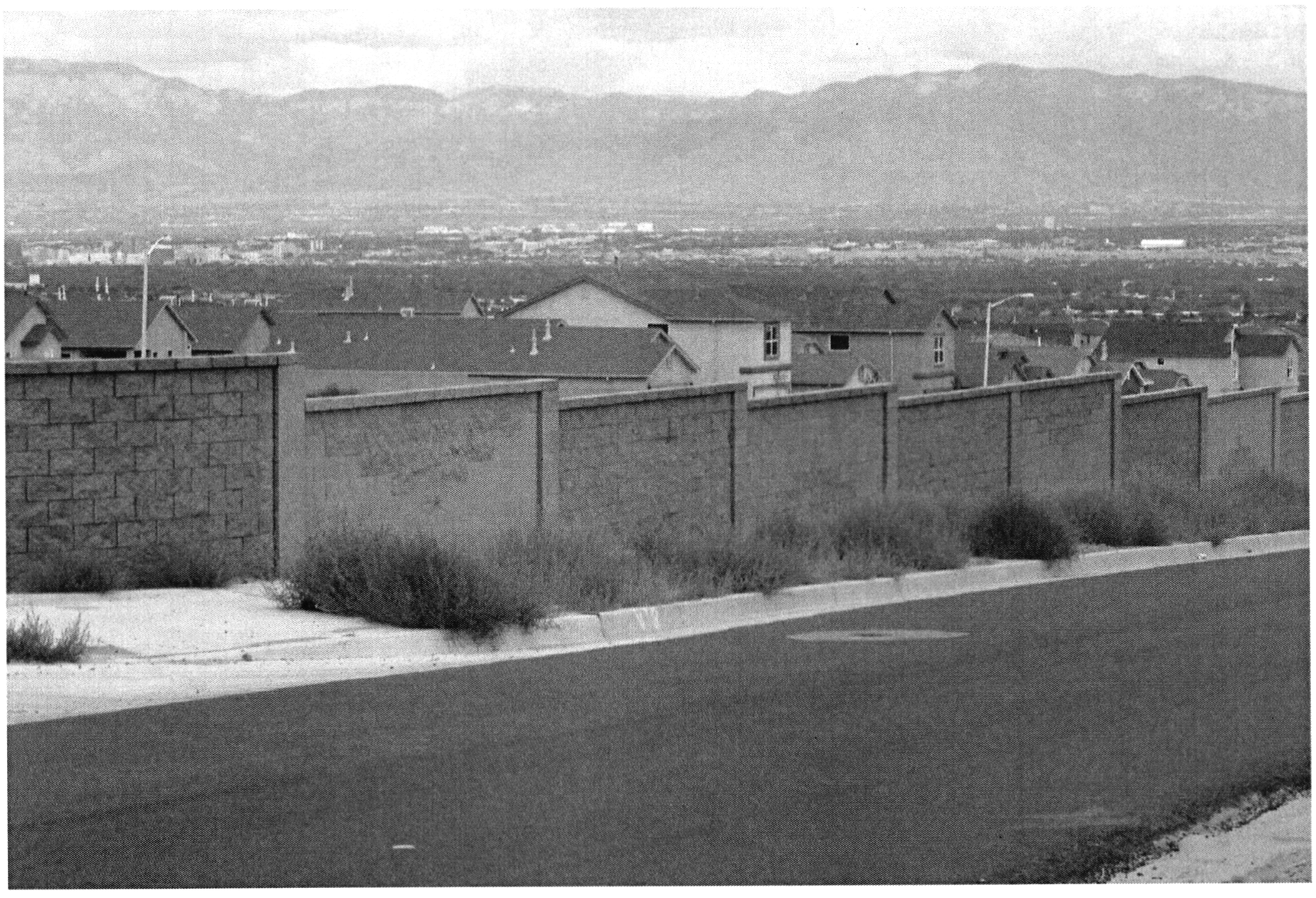

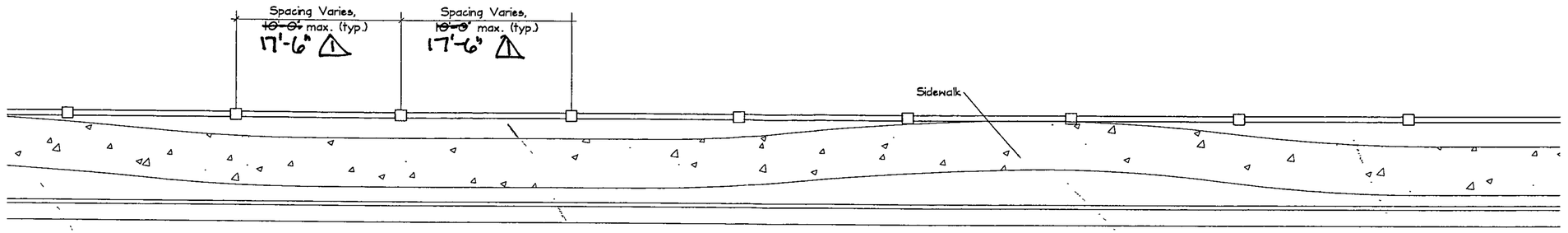

WALL PLAN ⚠1 GIBSON BLVD, MESSINA DR, AMOLE MESA AVE, CHACO CANYON DR, WALNUT CANYON RD (ENTRANCE ONLY), ALAMO CANYON DR (ENTRANCE ONLY)

SCALE: None

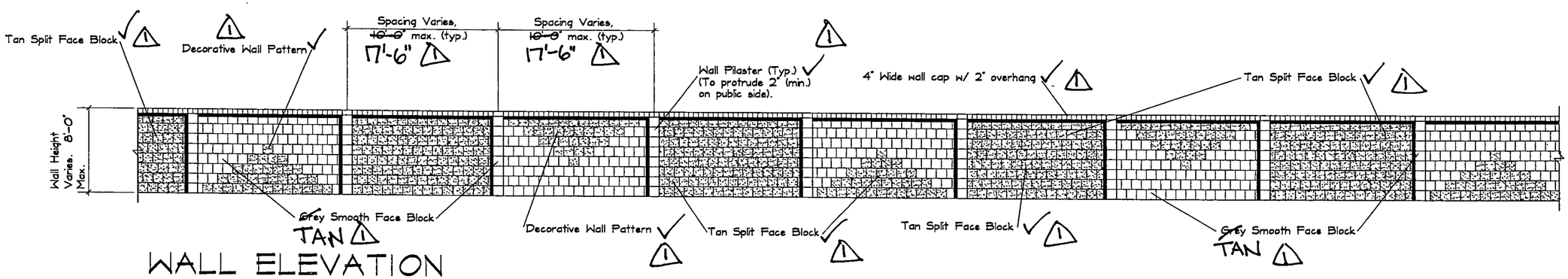

WALL ELEVATION

SCALE: None

WALL CERTIFICATION

I, SCOTT J. STEFFEN, OF THE FIRM BOHANNAN HUSTON, INC. HEREBY CERTIFY THAT THE PERIMETER WALL FOR SIERRA RANCH SUBDIVISION (DRB#1003429) HAS BEEN BUILT IN SUBSTANTIAL COMPLIANCE WITH AND IN ACCORDANCE WITH THE DESIGN INTENT OF THE DRB APPROVED WALL PLAN DATED JANUARY 26, 2005. (SEE ATTACHED PHOTOS OF THE WALL). I CERTIFY THAT THE PROJECT SITE WAS VISITED ON AUGUST 26, 2008 FOR THE PURPOSES OF VISUAL INSPECTION, AND THAT THE RECORD CONDITIONS EDITED ONTO THE PLAN ARE TRUE AND CORRECT TO THE BEST OF MY KNOWLEDGE AND BELIEF. THIS CETIFICATION IS SUBMITTED IN SUPPORT OF A REQUEST FOR SIA/FIANACIAL GUARANTY RELEASE.

THE RECORD INFORMATION PRESENTED HEREON IS NOT NECESSARILY COMPLETE AND INTENDED ONLY TO VERIFY SUBSTANTIAL COMPLIANCE WITH THE DRB APPROVED WALL SUBMITTAL. THOSE RELYING ON THIS RECORD DOCUMENT ARE ADVISED TO OBTAIN INDEPENDENT VERIFICATION OF ITS ACCRUACY BEFORE USING IT FOR ANY OTHER PURPOSE.

Scott J Steffen 8/28/08

SCOTT J. STEFFEN
NMPE 14664

DATE

Approved: _____

DRB #

Subdivision Name: Sierra Ranch Subdivision

Zone Atlas Page: N-8

Nearest Intersection: Gibson Blvd. and Messina Drive

December, 2004

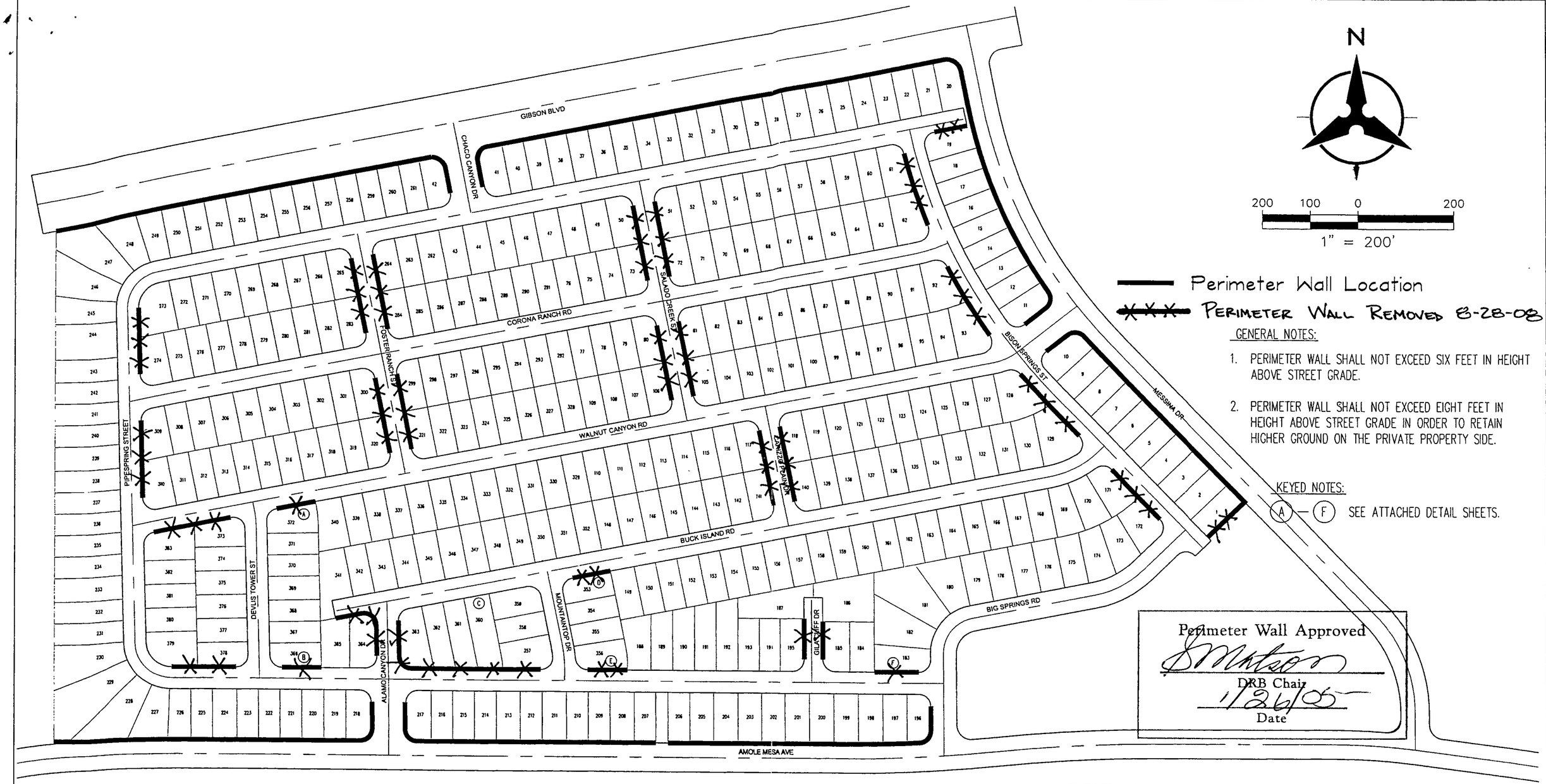

N

200 100 0 200

1" = 200'

Perimeter Wall Location

Perimeter Wall Removed 8-28-08

GENERAL NOTES:

1. PERIMETER WALL SHALL NOT EXCEED SIX FEET IN HEIGHT ABOVE STREET GRADE.
2. PERIMETER WALL SHALL NOT EXCEED EIGHT FEET IN HEIGHT ABOVE STREET GRADE IN ORDER TO RETAIN HIGHER GROUND ON THE PRIVATE PROPERTY SIDE.

KEYED NOTES:

(A) — (F) SEE ATTACHED DETAIL SHEETS.

Perimeter Wall Approved

DRB Chair

1/26/05

Date

Perimeter Wall Exhibit

P:\050188\cdp\general\Exhibits\Wall_Submittal_overall.dwg
January 20, 2005 - 3:31pm

Approved: _____

DRB #

Subdivision Name: Sierra Ranch Subdivision

Zone Atlas Page: N-8

Nearest Intersection: Gibson Blvd. and Messina Drive

December, 2004

City of Albuquerque

DEVELOPMENT PLAN REVIEW APPLICATION

	Supplemental form		Supplemental form
SUBDIVISION	**S**	**ZONING & PLANNING**	**Z**
☒ Major Subdivision action		☐ Annexation	
☐ Minor Subdivision action		☐ County Submittal	
☐ Vacation	**V**	☐ EPC Submittal	
☐ Variance (Non-Zoning)		☐ Zone Map Amendment (Establish or Change Zoning	
SITE DEVELOPMENT PLAN	**P**	☐ Sector Plan (Phase I, II, III)	
		☐ Amendment to Sector, Area, Facility or Comprehensive Plan	
☐ ...for Subdivision Purposes		☐ Text Amendment	
☐ ...for Building Permit			
☐ IP Master Development Plan			
☐ Cert. of Appropriateness (LUCC)	**L**	**APPEAL / PROTEST of...**	**A**
		☐ Decision by: DRB, EPC, LUCC, Planning Director or Staff, ZHE, Zoning Board of Appeals	

PRINT OR TYPE IN BLACK INK ONLY. The applicant or agent must submit the completed application in person to the Planning Department Development Services Center, 600 2nd Street NW, Albuquerque, NM 87102. Fees must be paid at the time of application. Refer to supplemental forms for submittal requirements.

APPLICANT INFORMATION:

NAME: CURB, INC. PHONE: 899-9656
ADDRESS: 5160 SAN FRANCISCO NE FAX: 875-1723
CITY: ALBUQUERQUE STATE NM ZIP87109 E-MAIL: ____
Proprietary interest in site: OWNER
AGENT (if any): BOHANNAN HUSTON INC. PHONE: 823-1000
ADDRESS: 7500 JEFFERSON NE FAX: 798-7988
CITY: ALBUQUERQUE STATE NM ZIP 87109 E-MAIL: ____

DESCRIPTION OF REQUEST: EXTENSION OF PRELIMINARY PLAT

Is the applicant seeking incentives pursuant to the Family Housing Development Program? ☐ Yes. ☒ No.

SITE INFORMATION: ACCURACY OF THE LEGAL DESCRIPTION IS CRUCIAL! ATTACH A SEPARATE SHEET IF NECESSARY.

Lot or Tract No. TRACT 16B, 16C EL RANCHO GRANDE Block: ____ Unit: ____
TBK:
Subdiv. / Addn. SIERRA RANCH SUBDIVISION

Current Zoning: R-LT R-D Proposed zoning: ____

Zone Atlas page(s): N-8 No. of **existing** lots: 2 No. of **proposed** lots: 383

Total area of site (acres): 61.2 Density if applicable: dwellings per gross acre: ____ dwellings per net acre: ____

Within city limits? ☒ Yes. No ☐, but site is within 5 miles of the city limits (DRB jurisdiction.) Within 1000FT of a landfill? NO

UPC No. 100805446943510102 MRGCD Map No. ____

LOCATION OF PROPERTY BY STREETS: On or Near: GIBSON BLVD. SW
Between: AMOLE MESA AVE SW and ____

CASE HISTORY:

List **any** current or prior case number that may be relevant to your application (Proj., App., DRB-, AX_,Z_, V_, S_, etc.): DRB# 1003429

Check-off if project was previously reviewed by Sketch Plat/Plan ☐, or Pre-application Review Team ☐. Date of review: ____

SIGNATURE Stephanie Walton DATE 1/3/2006

(Print) SCOTT STEFFEN ☐ Applicant ☒ Agent

FOR OFFICIAL USE ONLY Form revised 10/03

☐ **INTERNAL ROUTING**

	Application case numbers	Action	S.F.	Fees
☑ All checklists are complete	06DRB - ____ - 00003	EPP	3(3)	$ 50.00
☑ All fees have been collected	____ - ____ - ____	CMF	____	$ 20.00
☑ All case #s are assigned	____ - ____ - ____	____	____	$ ____
N/A AGIS copy has been sent	____ - ____ - ____	____	____	$ ____
☑ Case history #s are listed	____ - ____ - ____	____	____	$ ____
N/A Site is within 1000ft of a landfill	____ - ____ - ____	____	____	$ ____
N/A F.H.D.P. density bonus				Total
N/A F.H.D.P. fee rebate	Hearing date 01/11/06			$ 70.00

Sandy Handley 01/03/05
Planner signature / date

Project # 1003429

Sierra Ranch

FORM S(3): SUBDIVISION - D.R.B. MEETING (UNADVERTISED) OR INTERNAL ROUTING

❑ **SKETCH PLAT REVIEW AND COMMENT** **YOUR ATTENDANCE IS REQUIRED.**

__ Scale drawing of the proposed subdivision plat (folded to fit into an 8.5" by 14" pocket) **6** copies for unadvertised meetings. Sketches are not reviewed through internal routing.
__ Site sketch with measurements showing structures, parking, Bldg. setbacks, adjacent rights-of-way and street improvements, etcetera, if there is any existing land use (folded to fit into an 8.5" by 14" pocket) **6** copies.
__ Zone Atlas map with the entire property(ies) precisely and clearly outlined and crosshatched (to be photocopied)
__ Letter briefly describing, explaining, and justifying the request
__ Any original and/or related file numbers are listed on the cover application

☒ **MAJOR SUBDIVISION EXTENSION OF PRELIMINARY PLAT** **Your attendance is required.**

__ Preliminary Plat reduced to 8.5" x 11"
__ Zone Atlas map with the entire property(ies) precisely and clearly outlined and crosshatched (to be photocopied)
__ Letter briefly describing, explaining, and justifying the request
__ Copy of previous D.R.B. approved infrastructure list
__ Copy of the LATEST Official D.R.B. Notice of approval for Preliminary Plat Extension request
__ Any original and/or related file numbers are listed on the cover application

Extensions are not reviewed through internal routing.
Extension of preliminary plat approval expires after one year.

❑ **MAJOR SUBDIVISION FINAL PLAT APPROVAL** **Your attendance is required.**

__ Proposed Final Plat (folded to fit into an 8.5" by 14" pocket) **6** copies for unadvertised meetings
__ Design elevations & cross sections of perimeter walls **3 copies**
__ Zone Atlas map with the entire property(ies) precisely and clearly outlined and crosshatched (to be photocopied)
__ Original Mylar drawing of the proposed plat for internal routing only. Otherwise, bring Mylar to meeting.
__ Property owner's and City Surveyor's signatures on the Mylar drawing
__ Copy of recorded SIA
__ Landfill disclosure and EHD signature line on the Mylar drawing if property is within a landfill buffer
__ Any original and/or related file numbers are listed on the cover application
__ **DXF FILE AND HARD COPY OF FINAL PLAT DATA FOR AGIS IS REQUIRED**.

❑ **MINOR SUBDIVISION PRELIMINARY / FINAL PLAT APPROVAL** **Your attendance is required.**

__ Proposed Preliminary / Final Plat (folded to fit into an 8.5" by 14" pocket) **6** copies for unadvertised meetings, **4** copies for internal routing.
__ Site sketch with measurements showing structures, parking, Bldg. setbacks, adjacent rights-of-way and street improvements, etcetera, if there is any existing land use (folded to fit into an 8.5" by 14" pocket) **6** copies.
__ Zone Atlas map with the entire property(ies) precisely and clearly outlined and crosshatched (to be photocopied)
__ Letter briefly describing, explaining, and justifying the request
__ Original Mylar drawing of the proposed plat for internal routing only. Otherwise, bring Mylar to meeting.
__ Property owner's and City Surveyor's signatures on the Mylar drawing
__ Landfill disclosure and EHD signature line on the Mylar drawing if property is within a landfill buffer
__ Fee (see schedule)
__ Any original and/or related file numbers are listed on the cover application
__ Infrastructure list if required **(verify with DRB Engineer)** **NO INTERNAL ROUTING**
__ **DXF FILE AND HARD COPY OF FINAL PLAT DATA FOR AGIS IS REQUIRED**.

❑ **AMENDMENT TO PRELIMINARY PLAT (with minor changes)** **Your attendance is required.**
❑ **AMENDMENT TO INFRASTRUCTURE LIST (with minor changes)**
❑ **AMENDMENT TO GRADING PLAN (with minor changes)**

PLEASE NOTE: There are no clear distinctions between significant and minor changes with regard to subdivision amendments. Significant changes are those deemed by the DRB to require public notice and public hearing.

__ Proposed Amended Preliminary Plat, Infrastructure List, and/or Grading Plan (folded to fit into an 8.5" by 14" pocket) **6** copies for unadvertised meetings.
__ Original Preliminary Plat, Infrastructure List, and/or Grading Plan (folded to fit into an 8.5" by 14" pocket) **6** copies for unadvertised meetings
__ Zone Atlas map with the entire property(ies) precisely and clearly outlined and crosshatched (to be photocopied)
__ Letter briefly describing, explaining, and justifying the request
__ Original Mylar drawing of the proposed amended plat for internal routing only. Otherwise, bring Mylar to meeting.
__ Property owner's and City Surveyor's signatures on the Mylar drawing, if the plat is being amended
__ Any original and/or related file numbers are listed on the cover application

Amended preliminary plat approval expires after one year

.

I, the applicant, acknowledge that any information required but not submitted with this application will likely result in deferral of actions.

Scott Steffen
Applicant name (print)

for Stephanie Walton 1-3-2006
Applicant signature / date

Form revised 8/04, 1/05 & **10/05**

☑ Checklists complete
☑ Fees collected
☐ Case #s assigned
☑ Related #s listed

Application case numbers
06DRB-_____-00003
_____-_____-_____
_____-_____-_____

Sandy Handley 01/03/05
Planner signature / date

Project # 1003429

Stephanie
797-7988

ONE STOP SHOP
CITY OF ALBUQUERQUE PLANNING DEPARTMENT
Development & Building Services

PAID RECEIPT

APPLICANT NAME CURB INC

AGENT BOHANNAN HUSTON INC

ADDRESS 7500 JEFFERSON NE

PROJECT & APP # 1003429/06DRB00003

PROJECT NAME SIERRA RANCH SUBDIVISION

$ 20.00 **441032/3424000 Conflict Management Fee**

$ 50.00 **441006/4983000 DRB Actions**

$ _____ **441006/4971000 EPC/AA/LUCC Actions & All Appeals**

$ _____ **441018/4971000 Public Notification**

$ _____ **441006/4983000 DRAINAGE PLAN REVIEW OR TRAFFIC IMPACT STUDY*****
( )Major/Minor Subdivision ( )Site Development Plan ( )Bldg Permit
( ) Letter of Map Revision ( )Conditional Letter of Map Revision
( ) Traffic Impact Study

$ 70.00 **TOTAL AMOUNT DUE**

****NOTE: If a subsequent submittal is required, bring a copy of this paid receipt with you to avoid an additional charge.**

City Of Albuquerque
Treasury Division

1/3/2006 10:41AM LOC: ANNX
RECEIPT# 00055685 WS# 007 TRANS# 0017
Account 441006 Fund 0000
Activity 4983000 TRSKAL
Trans Amt $70.00
J24 Misc

$50.00

VI $70.00
CHANGE $0.00

Thank You

Counterreceipt.doc 6/21/04

City Of Albuquerque
Treasury Division

1/3/2006 10:41AM LOC: ANNX
RECEIPT# 00055684 WS# 007 TRANS# 0017
Account 441032 Fund 0000
Activity 3424000 TRSKAL
Trans Amt $70.00
J24 Misc

$20.00

Thank You

REC'D FEB 0 1 2005

OFFICIAL NOTICE OF DECISION

CITY OF ALBUQUERQUE
PLANNING DEPARTMENT
DEVELOPMENT REVIEW BOARD January 26, 2005

3. Project # 1003429
04DRB-01950 Major-Preliminary Plat Approval
04DRB-01951 Major-Vacation of Pub Right-of-Way
04DRB-01952 Major-Vacation of Public Easements
04DRB-01953 Minor-Sidewalk Waiver
04DRB-01954 Minor-Temp Defer SDWK

BOHANNAN HUSTON INC agent(s) for CURB INC request(s) the above action(s) for all or a portion of Tract(s) 16B & 16C EL RANCHO GRANDE, (to be known as **SIERRA RANCH SUBDIVISION,** zoned R-LT & RD, located on GIBSON BLVD SW, between MESSINA SW and GIBSON SW containing approximately 62 acre(s). [REF: 04DRB-01891, 04DRB00717] *[Deferred from 1/12/05]* (N-8)

At the January 26, 2005, Development Review Board meeting, with the signing of the infrastructure list dated 1/26/05 and approval of the grading plan engineer stamp dated 1/25/05 the preliminary plat was approved with the following conditions of final plat:

The AMAFCA Board shall vacate the easements prior to final plat approval.

The final plat needs to have the signature of the Home Owner's Association president.

Add a maintenance and beneficiary note to the plat regarding the pedestrian easements.

The vacations were approved as shown on Exhibit B in the Planning file, subject to these findings and conditions:

FINDINGS:

1. The public welfare is in no way served by retaining the rights-of-way and/or easements.

2. There is no convincing evidence that any substantial property right is being abridged against the will of the owner of the right.

CONDITIONS:

1. Final disposition shall be through the City Real Estate Office.

2. The vacated property shall be shown on a replat approved by the Development Review Board and the approved replat shall be filed for record with the Bernalillo County Clerk's Office within one year.

A sidewalk variance for waiver of sidewalks was approved as shown on Exhibit C in the Planning file. The temporary deferral of construction of sidewalks was approved as shown on Exhibit C in the Planning file.

05DRB-00090 Minor-SiteDev Plan Subd

BOHANNAN HUSTON INC agent(s) for CURB INC request(s) the above action(s) for all or a portion of Tract(s) 16B &16C, EL RANCHO GRANDE, (to be known as **SIERRA RANCH SUBDIVISION)** zoned R-LT & RD, located on GIBSON BLVD SW, between MESSINA SW and **GIBSON SW** containing approximately 62 acre(s). [REF: 04DRB01891, 04DRB00717] (N-8)

The site plan for subdivision was approved and signed off by the Board.

If you wish to appeal this decision, you must do so by February 10, 2005, in the manner described below.

Appeal is to the Environmental Planning Commission. Any person aggrieved with any determination of the Development Review Board may file an appeal on the Planning Department form, to the Planning Department, within 15 days of the Development Review Board's decision. The date the determination in question is issued is not included in the 15-day period for filing an appeal. If the fifteenth day falls on a Saturday, Sunday or holiday as listed in the Merit System Ordinance, the next working day is considered as the deadline for filing the appeal. Such appeal shall be heard within 60 days of its filing.

You will receive notice if any other person files an appeal. Successful applicants are reminded that other requirements of the City must be complied with, even after approval of the referenced application(s).

Please note that a Preliminary Plat approval date is the date of the DRB action plus the 15-day appeal period. The Preliminary Plat approval is effective one year from that date. The DRB must take action on the Preliminary Plat Extension prior to the expiration of the approval or the Preliminary Plat approval is null and void. (REF: Chapter 14 Article 14 Part 3-4 (E) Revised Ordinance.)

Please note that the vacation of all plats, rights-of-way, and easements are void after one year from the final appeal date referenced above if all conditions are not met (The effective date of Development Review Board approval is the hearing date plus the 15-day appeal period.) (REF: Chapter 14 Article 14 Part 7-2 (E)(3)(6) Revised Ordinance.)

Sheran Matson, AICP, DRB Chair

Cc:Curb Inc., 5160 San Francisco NE, 87109
Bohannan Huston Inc., 7500 Jefferson NE, 87109
Marilyn Maldonado, Planning Department, 4th Floor, Plaza del Sol Bldg.
Scott Howell, Property Management, Legal Dept./4th Flr, City/County Bldg
File

Bohannan Huston Inc.

Courtyard I
7500 Jefferson St. NE
Albuquerque, NM
87109-4335

www.bhinc.com

voice: 505.823.1000
facsimile: 505.798.7988
toll free: 800.877.5332

January 3, 2006

Sheran Matson, Chair
Development Review Board
City of Albuquerque
P.O. Box 1293
Albuquerque, New Mexico 87103

Re: PRELIMINARY PLAT EXTENSION
Sierra Ranch Subdivision DRB# 1003429

Dear Sheran:

We are submitting the following items for this extension request:

- Preliminary plat reduced to 8 ½ X 11
- Zone atlas with site highlighted
- Letter briefly describing and justifying request
- Copy of previous DRB approved infrastructure list
- Copy of latest DRB Official Notice

We are submitting an extension to the preliminary plat for Sierra Rancho subdivision because the developer is not finished completing infrastructure.

Please place this item on the DRB Agenda for hearing on January 11, 2006. If you have any questions or require further information, please call me.

Sincerely,
Bohannan Huston, Inc.

Stephanie Walton

Scott Steffen, P.E.
Project Manager
Community Development and Planning Group

SS
Enclosure

P \050188\cdp\corres\005-drb_plat_process\PRELIMINARY PLAT EXT doc

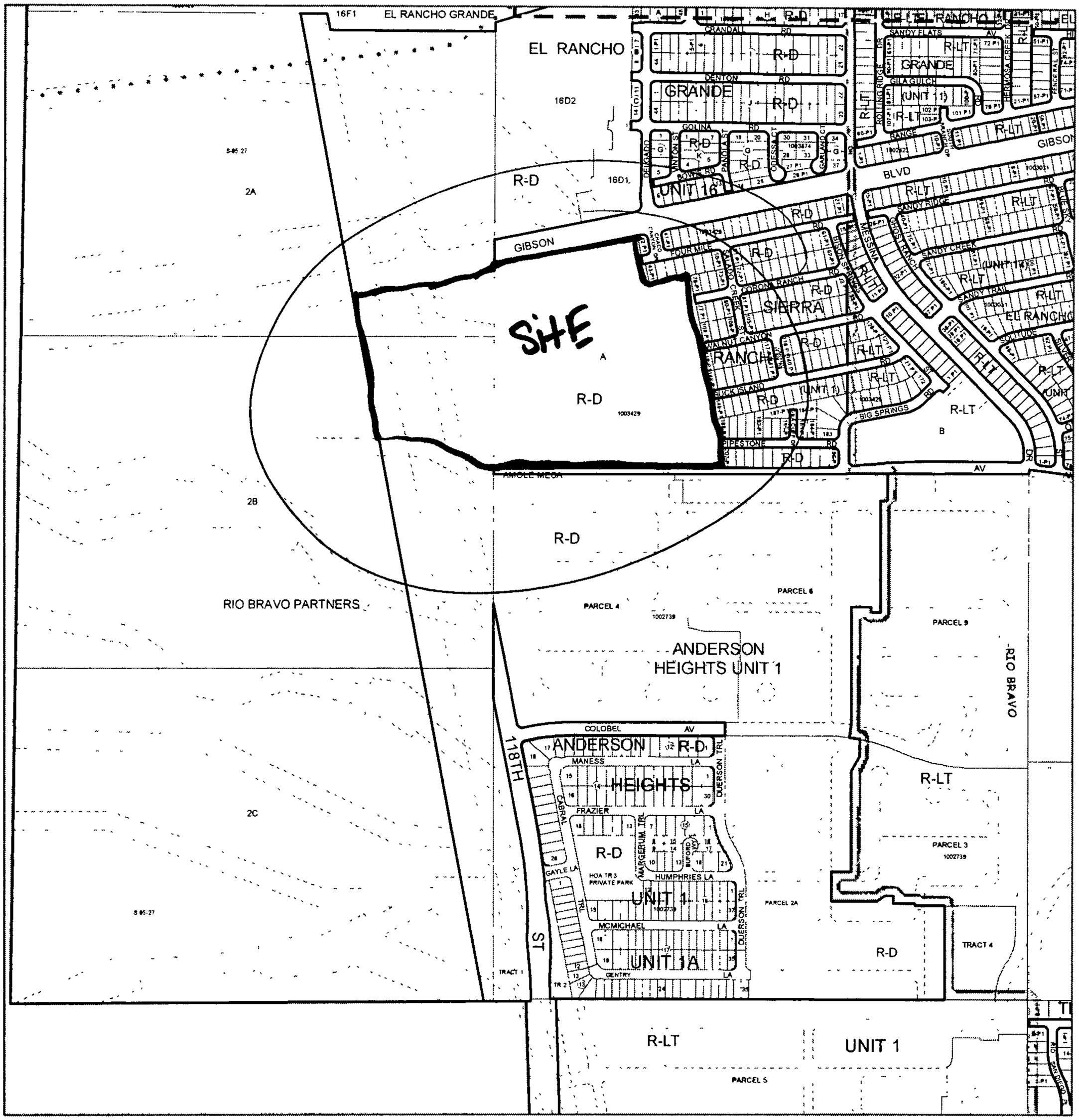

For more current information and more details visit http //www cabq gov/gis

Albuquerque Geographic Information System

Map amended through: 11/2/2005

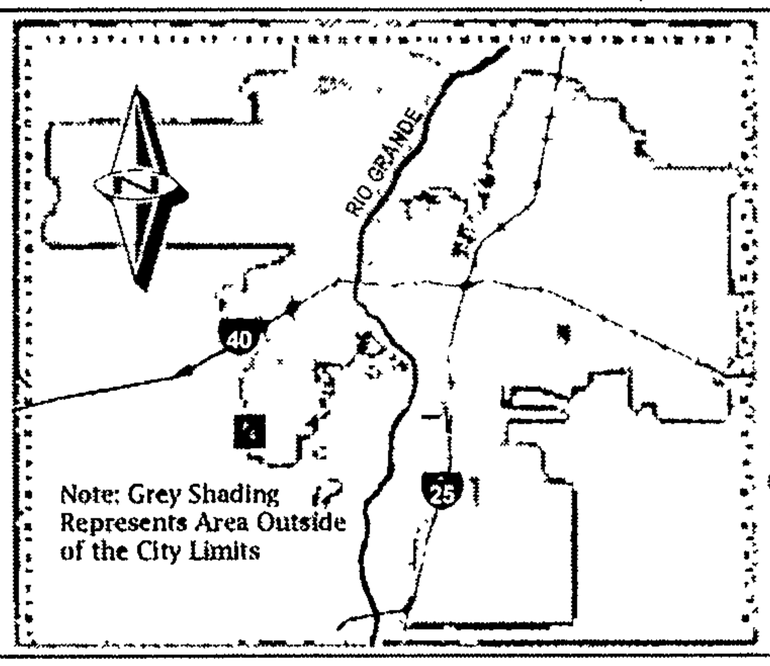

Zone Atlas Page.

N-08-Z

Selected Symbols

- SECTOR PLANS
- Design Overlay Zones
- City Historic Zones
- H-1 Buffer Zone
- Petroglyph Mon.
- Escarpment
- 2 Mile Airport Zone
- Airport Noise Contours
- Wall Overlay Zone

0 750 1 500 Feet

PRELIMINARY PLAT FOR
SIERRA RANCH SUBDIVISION
WITHIN THE TOWN OF ATRISCO GRANT
TOWNSHIP 9 NORTH, RANGE 2 EAST, NMPM
CITY OF ALBUQUERQUE
BERNALILLO COUNTY, NEW MEXICO
DECEMBER, 2004

LEGAL DESCRIPTION

TRACTS 16-B & 16-C, EL RANCHO GRANDE WITHIN THE TOWN OF ATRISCO GRANT PROJECTED SECTION 5 TOWNSHIP 9 NORTH, RANGE 2 EAST NMPM CITY OF ALBUQUERQUE BERNALILLO COUNTY NEW MEXICO (BOOK ____, PAGE ____, DATE ____)

GENERAL NOTES

1. EXISTING ZONING: R-LT, R-D
   PROPOSED DEVELOPMENT R-LT
2. PROPOSED NET ACREAGE 71.3 AC
   NUMBER OF LOTS 383
   PROPOSED DENSITY 5.37 DU/AC
3. MIN. LOT DIMENSIONS 45' X 105
   MINIMUM LOT AREA 4,725 SQFT
4. ALL STREETS, UTILITIES, AND STORM DRAIN IMPROVEMENTS ARE TO BE PUBLIC, AND TO BE DEDICATED TO THE CITY OF ALBUQUERQUE FOR MAINTENANCE.
5. LOT SETBACKS SHALL CONFORM TO R-LT ZONING REQUIREMENTS
6. NO INDIVIDUAL LOTS SHALL BE ALLOWED DIRECT ACCESS TO GIBSON BLVD., MESSINA DRIVE, AND/OR AMOLE MESA AVENUE.

SITE DATA

ZONE ATLAS NO.	M-8-Z
ZONING	R-LT, R-D
MILES OF FULL WIDTH STREETS CREATED	2.83 MILES
NO. OF EXISTING PARCELS	1
NO. OF LOTS CREATED	383
DENSITY	5.37 DU/AC

SURVEY NOTES

1. ALL BOUNDARY CORNERS SHOWN (●) ARE FOUND REBAR W/CAP
2. ALL STREET CENTERLINE MONUMENTATION SHALL BE INSTALLED AT ALL CENTERLINE PC'S, P.I.'S, ANGLE POINTS, AND STREET INTERSECTIONS AND SHOWN THUS (▲) AND WILL BE MARKED BY (4") ALUMINUM CAP STAMPED "CITY OF ALBUQUERQUE CENTERLINE MONUMENTATION MARKED, DO NOT DISTURB PLS 7719".
3. THE SUBDIVISION BOUNDARY WILL BE TIED TO THE NEW MEXICO STATE PLANE COORDINATE SYSTEM AS SHOWN.
4. BASIS OF BEARINGS WILL BE NEW MEXICO STATE PLANE BEARINGS.
5. DISTANCES SHALL BE GROUND DISTANCES.
6. MANHOLES WILL BE OFFSET AT ALL POINTS OF CURVATURE, TANGENCY, STREET INTERSECTIONS, AND ALL OTHER ANGLE POINTS TO ALLOW USE OF CENTERLINE MONUMENTATION.

VICINITY MAP — N.T.S. — ZONE ATLAS M-8-Z

ACS BRASS TABLET STAMPED "1-N8"
Geographic Position (NAD 1927)
N.M. State Plane Coordinates (Central Zone)
X= 348 455.82 Y= 1 470 679.06
Ground-to-Grid Factor = 0.99967260
ΔC = -00°17'16"

ACS BRASS TABLET STAMPED "TRANS"
Geographic Position (NAD 1927)
N.M. State Plane Coordinates (Central Zone)
X= 354 899.45 Y= 1,471,822.67
Ground-to-Grid Factor = 0.99967921
ΔC = -00°16'42"
SLD 1929 ELEVATION = 5118.43

KEYED NOTES CONT'D
4. EXISTING 100' DRAINAGE EASEMENT (07-19-90, 90C-163)
5. EXISTING 150' DRAINAGE EASEMENT (04-17-96, 96C-160)
6. EXISTING 40' PUBLIC PEDESTRIAN ACCESS, STORM AND SANITARY SEWER EASEMENT ( )

KEYED NOTES
A. 10' PUBLIC UTILITY EASEMENT
1. 35' PUBLIC SANITARY SEWER AND STORM DRAIN EASEMENT
2. 25' PUBLIC PEDESTRIAN ACCESS EASEMENT
3. 38' PUBLIC PEDESTRIAN ACCESS EASEMENT

LEGEND
- SUBDIVISION BOUNDARY LINE
- EXISTING SUBDIVISION BOUNDARY
- NEW LOT LINE
- ADJOINING PROPERTY LINE
- ▲ CENTERLINE MONUMENT TO BE INSTALLED
- △ CITY OF ALBUQUERQUE SURVEY CONTROL MONUMENT

APPROVED

CITY SURVEYOR — DATE 12/16/04

BO JOHNSON
VICE PRESIDENT, CURB INC — DATE 12/16/04

Bohannan ▲ Huston
Courtyard I 7500 Jefferson St. NE Albuquerque, NM 87109-4335
ENGINEERING ▲ SPATIAL DATA ▲ ADVANCED TECHNOLOGIES

P:\050188\pdb\general\050188_Pre-plat.dwg
December 16, 2004 - 9:25am

DRB APPROVED 01/26/05

Current DRC
Project No. _____

ORIGINAL

Figure 12

INFRASTRUCTURE LIST

EXHIBIT "A"
TO SUBDIVISION IMPROVEMENTS AGREEMENT
DEVELOPMENT REVIEW BOARD (D R B) REQUIRED INFRASTRUCTURE LIST

SIERRA RANCH SUBDIVISION
PRELIMINARY PLAT

Date Submitted: January 25, 2005

Date Site Plan Approved: _____

Date Preliminary Plat Approved: 1/26/05

Date Preliminary Plat Expires: 1/26/06

DRB Project No. 1003429

APPLICATION NO. 04DRB-01950

Following is a summary of PUBLIC/PRIVATE Infrastructure required to be constructed or financially guaranteed for the above development. This Listing is not necessarily a complete listing. During the SIA process and/or in the review of the construction drawings, if the DRC Chair determines that appurtenant items and/or unforeseen items have not been included in the infrastructure listing, the DRC Chair may include those items in the listing and related financial guarantee. Likewise, if the DRC Chair determines that appurtenant or non-essential items can be deleted from the listing, those items may be deleted as well as the related portions of the financial guarantees. All such revisions require approval by the DRC Chair, the User Department and agent/owner. If such approvals are obtained, these revisions to the listing will be incorporated administratively. In addition, any unforeseen items which arise during construction which are necessary to complete the project and which normally are the Subdivider's responsibility will be required as a condition of project acceptance and close out by the City.

SIA Sequence #	COA DRC Project #	Size	Type of Improvement	Location	From	To	Private Inspector	City Inspector	City Cnst Engineer
SIERRA RANCH SUBDIVISION - UNIT I									
			ONSITE PUBLIC ROADWAY IMPROVEMENTS						
		30' ~~EOA-F~~ F-F	ARTERIAL PAVING W/ PCC CURB & GUTTER, MEDIAN CURB AND PCC 6' WIDE SIDEWALK ON SOUTH SIDE ONLY	GIBSON BOULEVARD	CHACO CANYON DR	MESSINA DRIVE	/	/	/
		24' EOA-F	RESIDENTIAL PAVING W/ PCC CURB & GUTTER AND PCC 6' WIDE SIDEWALK ON WEST SIDE ONLY	MESSINA DRIVE	GIBSON BOULEVARD	AMOLE MESA AVENUE	/	/	/
		24' EOA-F	RESIDENTIAL PAVING W/ PCC CURB & GUTTER AND PCC 6' WIDE SIDEWALK ON NORTH SIDE ONLY	AMOLE MESA AVE	LOT 207	MESSINA DRIVE	/	/	/
		28' F-F	RESIDENTIAL PAVING W/ PCC CURB & GUTTER AND PCC 4' WIDE SIDEWALK ON BOTH SIDES*	FOUR MILE ROAD	LOTS 42/43	BISON SPRINGS STREET	/	/	/
		24' F-F	RESIDENTIAL PAVING W/ PCC CURB & GUTTER AND PCC 4' WIDE SIDEWALK ON NORTH SIDE ONLY*	FOUR MILE ROAD	BISON SPRINGS STREET	EAST STUB TERMINUS	/	/	/
		28' F-F	RESIDENTIAL PAVING W/ PCC CURB & GUTTER AND PCC 4' WIDE SIDEWALK ON BOTH SIDES*	CORONA RANCH RD	LOTS 76/77	BISON SPRINGS STREET	/	/	/
		28' F-F	RESIDENTIAL PAVING W/ PCC CURB & GUTTER AND PCC 4' WIDE SIDEWALK ON BOTH SIDES*	WALNUT CANYON RD	LOTS 109/110	BISON SPRINGS STREET	/	/	/
		48' F-F	RESIDENTIAL PAVING W/ PCC CURB & GUTTER AND PCC 6' WIDE SIDEWALK ON BOTH SIDES*	WALNUT CANYON RD	BISON SPRINGS STREET	MESSINA DRIVE	/	/	/
		28' F-F	RESIDENTIAL PAVING W/ PCC CURB & GUTTER AND PCC 4' WIDE SIDEWALK ON BOTH SIDES*	BUCK ISLAND ROAD	LOTS 148/149	BISON SPRINGS STREET	/	/	/

SIA Sequence #	COA DRC Project #	Size	Type of Improvement	Location	From	To	Private Inspector	City Inspector	City Cnst Engineer
			ONSITE PUBLIC ROADWAY IMPROVEMENTS (CONT.)						
		28' F-F	RESIDENTIAL PAVING W/ PCC CURB & GUTTER AND PCC 4' WIDE SIDEWALK ON BOTH SIDES*	PIPESTONE ROAD	LOTS 188/207	BIG SPRINGS ROAD	/	/	/
		36' F-F	RESIDENTIAL PAVING W/ PCC CURB & GUTTER AND PCC 4' WIDE SIDEWALK ON BOTH SIDES*	BIG SPRINGS ROAD	AMOLE MESA AVE	BISON SPRINGS STREET	/	/	/
		48' F-F	RESIDENTIAL PAVING W/ PCC CURB & GUTTER AND PCC 6' WIDE SIDEWALK ON BOTH SIDES*	CHACO CANYON DR	GIBSON BOULEVARD	FOUR MILE ROAD	/	/	/
		28' F-F	RESIDENTIAL PAVING W/ PCC CURB & GUTTER AND PCC 4' WIDE SIDEWALK ON BOTH SIDES*	SALADO CREEK ST	FOUR MILE ROAD	WALNUT CANYON ROAD	/	/	/
		28' F-F	RESIDENTIAL PAVING W/ PCC CURB & GUTTER AND PCC 4' WIDE SIDEWALK ON BOTH SIDES*	CARIZZO PLAIN DR	WALNUT CANYON RD	BUCK ISLAND ROAD	/	/	/
		28' F-F	RESIDENTIAL PAVING W/ PCC CURB & GUTTER AND PCC 4' WIDE SIDEWALK ON BOTH SIDES*	BISON SPRINGS ST	FOUR MILE ROAD	SOUTH STUB TERMINUS	/	/	/
		28' F-F	RESIDENTIAL PAVING W/ PCC CURB & GUTTER AND PCC 4' WIDE SIDEWALK ON EAST SIDE ONLY*	GILA CLIFF DRIVE	NORTH STUB TERMINUS	PIPESTONE ROAD	/	/	/
		25' WIDE	6' AC TRAIL	PEDESTRIAN ACCESS BETWEEN LOTS 206/207	PIPESTONE ROAD	AMOLE MESA AVENUE	/	/	/
							/	/	/

* SIDEWALKS TO BE DEFERRED PER DEFERRAL EXHIBIT 'B'.
WAIVER OF SIDEWALK ON SOUTH SIDE OF FOUR MILE ROAD STUB AND WEST SIDE OF GILA CLIFF DRIVE

STREET LIGHTS AS PER COA DPM

SIA Sequence #	COA DRC Project #	Size	Type of Improvement	Location	From	To	Private Inspector	City Inspector	City Cnst Engineer
SIERRA RANCH SUBDIVISION - UNIT I									
			ONSITE PUBLIC STORM DRAIN IMPROVEMENTS						
		18"-72" DIA	RCP W/ NEC. MH'S, LATERALS & INLETS	MESSINA DRIVE	GIBSON BLVD	AMOLE MESA AVENUE	/	/	/
		18-24" DIA	RCP W/ NEC MH'S, LATERALS & INLETS	FOUR MILE ROAD	LOT 29	BISON SPRINGS STREET	/	/	/
		18"-24" DIA	RCP W/ NEC. MH'S, LATERALS & INLETS	CORONA RANCH RD	LOTS 76/77	SALADO CREEK STREET	/	/	/
		30" DIA	RCP W/ NEC. MH'S, LATERALS & INLETS	SALADO CREEK ST.	CORONA RANCH RD.	WALNUT CANYON ROAD	/	/	/
		18" - 36" DIA	RCP W/ NEC. MH'S, LATERALS & INLETS	WALNUT CANYON RD	LOTS 109/110	BISON SPRINGS STREET	/	/	/
		~~18~~ 24" DIA	RCP W/ NEC. MH'S, LATERALS & INLETS	BUCK ISLAND ROAD	LOT 138	BISON SPRINGS STREET	/	/	/
		18" - 24" DIA	RCP W/ NEC. MH'S, LATERALS & INLETS	PIPESTONE ROAD	LOTS 188/207	BIG SPRINGS ROAD	/	/	/
		30" DIA	RCP W/ NEC. MH'S, LATERALS & INLETS	BIG SPRINGS ROAD	PIPESTONE ROAD	BISON SPRINGS STREET	/	/	/
		18" - 42" DIA	RCP W/ NEC. MH'S, LATERALS & INLETS	BISON SPRINGS ST	FOUR MILE ROAD	SOUTH STUB TERMINUS	/	/	/
		60" DIA	RCP W/ NEC. MH'S, LATERALS & INLETS	PUBLIC EASEMENT TRACT 16-A	BISON SPRINGS ST	MESSINA DRIVE	/	/	/
		~~42~~ 48" DIA	RCP W/ NEC. MH'S, LATERALS & INLETS	WALNUT CANYON RD.	BISON SPRINGS ST	MESSINA DRIVE	/	/	/
		54" DIA	RCP W/ NEC. MH'S, LATERALS & INLETS	OPEN RANGE AVE EL RANCHO GRANDE UNIT 15	MESSINA DRIVE	EXISTING STUB BLUE SKY STREET	/	/	/
			• THIS ITEM IS ON THE EL RANCHO GRANDE UNIT 15 INFRASTRUCTURE LIST DRB#1003030 AND SHOWN ON THE INFRASTRUCTURE PLANS, COA PROJECT #699388, WHICH HAS NOT GONE TO WORK ORDER						
		72" DIA	RCP W/ NEC. MH'S, LATERALS & INLETS	OPEN RANGE AVE SUN GATE SUBDIVISION	BLUE SKY STREET	BLAKE ROAD	/	/	/
			• THIS ITEM IS ON THE SUN GATE SUBDIVISION INFRASTRUCTURE LIST DRB#1003175, SHOWN ON THE INFRASTRUCTURE PLANS, COA PROJECT #736781, AND FINACIALLY GUARANTEED WITH THE SUN GATE FINAL PLAT DEFERRED ITEM.						
		72" DIA	RCP W/ NEC. MH'S, LATERALS & INLETS	BLAKE ROAD	OPEN RANGE AVE	98TH STREET	/	/	/
			• THIS ITEM IS ON THE SUN GATE ESTATES SUBDIVISION INFRASTRUCTURE LIST DRB#1003591 SHOWN ON INFRASTRUCTURE PLANS, COA PROJECT #722783.						
		72-90" DIA	RCP W/ NEC MH'S, LATERALS & INLETS	BLAKE ROAD	98TH STREET	AMOLE ARROYO	/	/	/
			• SHOWN ON INFRASTRUCTURE PLANS, COA PROJECT #722783, WHICH HAS NOT GONE TO WORK ORDER						

SIA Sequence #	COA DRC Project #	Size	Type of Improvement	Location	From	To	Private Inspector	City Inspector	City Cnst Engineer
SIERRA RANCH SUBDIVISION - UNIT I									
			ONSITE PUBLIC STORM DRAIN IMPROVEMENTS (CONT'D)						
			4.2 ACRE-FEET SURGE POND WITH PUBLIC EASEMENT AND COVENANT AND AGREEMENT	PARK TRACT TRACT 16-A			/	/	/
			3.5 ACRE-FEET TEMPORARY RETENTION POND WITH PUBLIC EASEMENT AND COVENANT AND AGREEMENT	TRACT 16-D EL RANCHO GRANDE			/	/	/
			2.6 ACRE-FEET TEMPORARY RETENTION POND WITH PUBLIC EASEMENT AND COVENANT AND AGREEMENT	SIERRA RANCH UNIT 2			/	/	/

NOTES: A GRADING AND DRAINAGE CERTIFICATION OF THE APPROVED GRADING PLAN IS REQUIRED PRIOR TO THE RELEASE OF FINANCIAL GUARANTEES.

THERE WILL BE NO RELEASE OF FINANCIAL GUARANTEE OR SIA UNTIL AGREEMENT IS PROCESSED AND APPROVED WITH AMAFCA FOR CONSTRUCTION OF THE AMOLE ARROYO IMPROVEMENTS.

SIA Sequence #	COA DRC Project #	Size	Type of Improvement	Location	From	To	Private Inspector	City Inspector	City Cnst Engineer
SIERRA RANCH SUBDIVISION - UNIT I									
			ONSITE PUBLIC WATERLINE IMPROVEMENTS						
		18" DIA	WATERLINE W/ NEC. VALVES FH'S, MJ'S & RJ'S	CHACO CANYON DR	GIBSON BLVD	FOUR MILE ROAD	/	/	/
		4-8" DIA	WATERLINE W/ NEC. VALVES FH'S, MJ'S & RJ'S	FOUR MILE ROAD	LOTS 42/43	EAST STUB TERMINUS	/	/	/
		6" DIA	WATERLINE W/ NEC. VALVES FH'S, MJ'S & RJ'S	CORONA RANCH RD	LOTS 76/77	BISON SPRINGS ST	/	/	/
		6" DIA	WATERLINE W/ NEC. VALVES FH'S, MJ'S & RJ'S	WALNUT CANYON RD	LOTS 109/110	BISON SPRINGS ST	/	/	/
		6" DIA	WATERLINE W/ NEC. VALVES FH'S, MJ'S & RJ'S	BUCK ISLAND ROAD	LOTS 148/149	BISON SPRINGS ST	/	/	/
		6" DIA	WATERLINE W/ NEC. VALVES FH'S, MJ'S & RJ'S	PIPESTONE ROAD	LOTS 188/207	BIG SPRINGS RD	/	/	/
		6-8" DIA	WATERLINE W/ NEC. VALVES FH'S, MJ'S & RJ'S	BIG SPRINGS ROAD	AMOLE MESA AVE	BISON SPRINGS ST	/	/	/
		4-6" DIA	WATERLINE W/ NEC. VALVES FH'S, MJ'S & RJ'S	BISON SPRINGS ST	FOUR MILE ROAD	SOUTH STUB TERMINUS	/	/	/
		4" DIA	WATERLINE W/ NEC VALVES FH'S, MJ'S & RJ'S	GILA CLIFF DRIVE	NORTH STUB TERMINUS	PIPESTONE ROAD	/	/	/
		12" DIA	WATERLINE W/ NEC. VALVES FH'S, MJ'S & RJ'S	AMOLE MESA AVE	LOT 207	MESSINA DRIVE	/	/	/
		12" DIA	WATERLINE W/ NEC VALVES FH'S, MJ'S & RJ'S	AMOLE MESA AVE	MESSINA DRIVE	MESA ARENOSA	/	/	/
		NOTE:	WATER METER FOR LANDSCAPING IN THE PUBLIC RIGHT-OF-WAY						

SIA Sequence #	COA DRC Project #	Size	Type of Improvement	Location	From	To	Private Inspector	City Inspector	City Cnst Engineer
SIERRA RANCH SUBDIVISION - UNIT I									
			ONSITE PUBLIC SANITARY SEWER IMPROVEMENTS						
		8" DIA	SANITARY SEWER W/ NEC. MH'S & SERVICES	FOUR MILE ROAD	LOTS 42/43	EAST STUB TERMINUS	/	/	/
		8" DIA	SANITARY SEWER W/ NEC. MH'S & SERVICES	CORONA RANCH RD	LOTS 76/77	BISON SPRINGS ST	/	/	/
		8" DIA	SANITARY SEWER W/ NEC. MH'S & SERVICES	WALNUT CANYON RD	LOTS 109/110	BISON SPRINGS ST	/	/	/
		8" DIA	SANITARY SEWER W/ NEC. MH'S & SERVICES	BUCK ISLAND ROAD	LOTS 148/149	BISON SPRINGS ST	/	/	/
		8" DIA	SANITARY SEWER W/ NEC. MH'S & SERVICES	PIPESTONE ROAD	LOTS 188/207	BIG SPRINGS RD	/	/	/
		8" DIA	SANITARY SEWER W/ NEC. MH'S & SERVICES	BIG SPRINGS ROAD	PIPESTONE ROAD	BISON SPRINGS ST	/	/	/
		8" DIA	SANITARY SEWER W/ NEC MH'S & SERVICES	GILA CLIFF DRIVE	NORTH STUB TERMINUS	PIPESTONE ROAD	/	/	/
		8" DIA	SANITARY SEWER W/ NEC. MH'S & SERVICES	BISON SPRINGS ST	FOUR MILE ROAD	SOUTH STUB TERMINUS	/	/	/
		10" DIA	SANITARY SEWER W/ NEC. MH'S & SERVICES	PUBLIC EASEMENT	BISON SPRINGS ST	MESSINA DRIVE	/	/	/
		10" DIA	SANITARY SEWER W/ NEC. MH'S & SERVICES	MESSINA DRIVE	PUBLIC EASEMENT	AMOLE MESA AVENUE	/	/	/
		10" DIA	SANITARY SEWER W/ NEC. MH'S & SERVICES	AMOLE MESA AVE.	MESSINA DRIVE	PUBLIC EASEMENT IN EL RANCHO GRANDE UNIT 15	/	/	/
		8-10" DIA	SANITARY SEWER W/ NEC. MH'S & SERVICES	PUBLIC EASEMENT IN EL RANCHO GRANDE UNIT 15	AMOLE MESA AVENUE	FUTURE OPEN RANGE AVE. EXISTING STUB	/	/	/

SIA Sequence #	COA DRC Project #	Size	Type of Improvement	Location	From	To	Private Inspector	City Inspector	City Cnst Engineer
SIERRA RANCH SUBDIVISION - UNIT 2				NOTE: ALL UNIT 1 PUBLIC IMPROVEMENTS REQUIRED FOR UNIT 2.					
			ONSITE PUBLIC ROADWAY IMPROVEMENTS						
		30' ~~EOA-F~~ F-F	ARTERIAL PAVING W/ PCC CURB & GUTTER, MEDIAN CURB AND PCC 6' WIDE SIDEWALK ON SOUTH SIDE ONLY	GIBSON BOULEVARD	LOT 247	CHACO CANYON DR	/	/	/
		24' EOA-F	RESIDENTIAL PAVING W/ PCC CURB & GUTTER AND PCC 6' WIDE SIDEWALK ON NORTH SIDE ONLY	AMOLE MESA AVE	LOT 229	LOT 208	/	/	/
		28' F-F	RESIDENTIAL PAVING W/ PCC CURB & GUTTER AND PCC 4' WIDE SIDEWALK ON BOTH SIDES*	FOUR MILE ROAD	PIPESPRING STREET	LOTS 261/262	/	/	/
		28' F-F	RESIDENTIAL PAVING W/ PCC CURB & GUTTER AND PCC 4' WIDE SIDEWALK ON BOTH SIDES*	CORONA RANCH RD	PIPESPRING STREET	LOTS 291/292	/	/	/
		28' F-F	RESIDENTIAL PAVING W/ PCC CURB & GUTTER AND PCC 4' WIDE SIDEWALK ON BOTH SIDES*	WALNUT CANYON RD	PIPESPRING STREET	LOTS 328/329	/	/	/
		24' F-F	RESIDENTIAL PAVING W/ PCC CURB & GUTTER AND PCC 4' WIDE SIDEWALK ON NORTH SIDE ONLY*	BUCK ISLAND ROAD	WEST STUB TERMINUS	ALAMO CANYON DRIVE	/	/	/
		28' F-F	RESIDENTIAL PAVING W/ PCC CURB & GUTTER AND PCC 4' WIDE SIDEWALK ON BOTH SIDES*	BUCK ISLAND ROAD	ALAMO CANYON DR	LOTS 352/353	/	/	/
		28' F-F	RESIDENTIAL PAVING W/ PCC CURB & GUTTER AND PCC 4' WIDE SIDEWALK ON BOTH SIDES*	PIPESTONE ROAD	PIPESPRING STREET	LOTS 208/356	/	/	/
		28' F-F	RESIDENTIAL PAVING W/ PCC CURB & GUTTER AND PCC 4' WIDE SIDEWALK ON BOTH SIDES*	PIPESPRING STREET	FOUR MILE ROAD	PIPESTONE ROAD	/	/	/
		28' F-F	RESIDENTIAL PAVING W/ PCC CURB & GUTTER AND PCC 4' WIDE SIDEWALK ON BOTH SIDES*	DEVILS TOWER ST	WALNUT CANYON RD	PIPESTONE ROAD	/	/	/
		48' F-F	RESIDENTIAL PAVING W/ PCC CURB & GUTTER AND PCC 6' WIDE SIDEWALK ON BOTH SIDES*	ALAMO CANYON DR	PIPESTONE ROAD	AMOLE MESA AVENUE	/	/	/
		28' F-F	RESIDENTIAL PAVING W/ PCC CURB & GUTTER AND PCC 4' WIDE SIDEWALK ON BOTH SIDES*	ALAMO CANYON DR	BUCK ISLAND ROAD	PIPESTONE ROAD	/	/	/
		28' F-F	RESIDENTIAL PAVING W/ PCC CURB & GUTTER AND PCC 4' WIDE SIDEWALK ON BOTH SIDES*	FOSTER RANCH ST	FOUR MILE ROAD	WALNUT CANYON ROAD	/	/	/
		28' F-F	RESIDENTIAL PAVING W/ PCC CURB & GUTTER AND PCC 4' WIDE SIDEWALK ON BOTH SIDES*	MOUNTAINTOP DR	BUCK ISLAND ROAD	PIPESTONE ROAD	/	/	/
			* SIDEWALKS TO BE DEFERRED PER DEFERRAL EXHIBIT 'B'. WAIVER OF SIDEWALK ON SOUTH SIDE OF BUCK ISLAND ROAD STUB				/	/	/
			STREET LIGHTS AS PER COA DPM						

SIA Sequence #	COA DRC Project #	Size	Type of Improvement	Location	From	To	Private Inspector	City Inspector	City Cnst Engineer
SIERRA RANCH SUBDIVISION - UNIT 2									
			ONSITE PUBLIC STORM DRAIN IMPROVEMENTS						
		24" DIA	RCP W/ NEC MH'S, LATERALS & INLETS	PUBLIC EASEMENT LOT 244	WEST BOUNDARY	PIPESPRING STREET	/	/	/
		24" DIA	RCP W/ NEC MH'S, LATERALS & INLETS	PIPESPRING STREET	PUBLIC EASEMENT	CORONA RANCH ROAD	/	/	/
		24" DIA	RCP W/ NEC MH'S, LATERALS & INLETS	CORONA RANCH RD	PIPESPRING STREET	LOTS 291/292	/	/	/
			OFFSITE DRAINAGE OPTION #1 INTERIM SOUTH POWERLINE RIPRAP CHANNEL W/DROP STRUCTURES & NECESSARY SEDIMENTATION CONTROL STRUCTURES	200' PNM EASEMENT	GIBSON BLVD	POND #2 - ANDERSON HTS APPROVED GRADING PLAN	/	/	/
			OFFSITE DRAINAGE OPTION #2 1.6 ACRE-FEET TEMPORARY RETENTION POND WITH PUBLIC EASEMENT AND COVENANT AND AGREEMENT	150' AMAFCA DRAINAGE EASEMENT			/	/	/
			1.0 ACRE-FEET TEMPORARY RETENTION POND WITH PUBLIC EASEMENT AND COVENANT AND AGREEMENT	150' AMAFCA DRAINAGE EASEMENT			/	/	/

NOTES

A GRADING AND DRAINAGE CERTIFICATION OF THE APPROVED GRADING PLAN IS REQUIRED PRIOR TO THE RELEASE OF FINANCIAL GUARANTEES

THERE WILL BE NO RELEASE OF FINANCIAL GUARANTEE OR SIA UNTIL AGREEMENT IS PROCESSED AND APPROVED WITH AMAFCA FOR CONSTRUCTION OF THE AMOLE ARROYO IMPROVEMENTS

SIA Sequence #	COA DRC Project #	Size	Type of Improvement	Location	From	To	Private Inspector	City Inspector	City Cnst Engineer
SIERRA RANCH SUBDIVISION - UNIT 2									
			ONSITE PUBLIC WATERLINE IMPROVEMENTS						
		8" DIA	WATERLINE W/ NEC. VALVES FH'S, MJ'S & RJ'S	FOUR MILE ROAD	PIPESPRING STREET	LOTS 261/262	/	/	/
		6" DIA	WATERLINE W/ NEC. VALVES FH'S, MJ'S & RJ'S	CORONA RANCH RD	PIPESPRING STREET	LOTS 291/292	/	/	/
		6" DIA	WATERLINE W/ NEC. VALVES FH'S, MJ'S & RJ'S	WALNUT CANYON RD	PIPESPRING STREET	LOTS 328/329	/	/	/
		4-6" DIA	WATERLINE W/ NEC. VALVES FH'S, MJ'S & RJ'S	BUCK ISLAND ROAD	WEST STUB TERMINUS	LOTS 352/353	/	/	/
		6-8" DIA	WATERLINE W/ NEC VALVES FH'S, MJ'S & RJ'S	PIPESTONE ROAD	PIPESPRING STREET	LOTS 208/356	/	/	/
		8" DIA	WATERLINE W/ NEC. VALVES FH'S, MJ'S & RJ'S	PIPESPRING STREET	FOUR MILE ROAD	PIPESTONE ROAD	/	/	/
		6" DIA	WATERLINE W/ NEC VALVES FH'S, MJ'S & RJ'S	DEVILS TOWER ST	WALNUT CANYON RD	PIPESTONE ROAD	/	/	/
		6" DIA	WATERLINE W/ NEC VALVES FH'S, MJ'S & RJ'S	MOUNTAINTOP DR	BUCK ISLAND ROAD	PIPESTONE ROAD	/	/	/
		20" DIA	WATERLINE W/ NEC. VALVES FH'S, MJ'S & RJ'S	PUBLIC EASEMENT IN EL RANCHO GRANDE UNIT 18	DELGADO	GIBSON BLVD. AT CHACO CANYON DRIVE	/	/	/
		18" DIA	WATERLINE W/ NEC VALVES FH'S, MJ'S & RJ'S	FOUR MILE ROAD	FOSTER RANCH ST.	LOTS 261/262	/	/	/
		18" DIA	WATERLINE W/ NEC VALVES FH'S, MJ'S & RJ'S	FOSTER RANCH ST.	FOUR MILE ROAD	WALNUT CANYON ROAD	/	/	/
		18" DIA	WATERLINE W/ NEC. VALVES FH'S, MJ'S & RJ'S	WALNUT CANYON RD.	DEVILS TOWER ST.	FOSTER RANCH ST.	/	/	/
		18" DIA	WATERLINE W/ NEC. VALVES FH'S, MJ'S & RJ'S	DEVILS TOWER ST.	WALNUT CANYON RD.	PIPESTONE ROAD	/	/	/
		18" DIA	WATERLINE W/ NEC. VALVES FH'S, MJ'S & RJ'S	PIPESTONE ROAD	DEVILS TOWER ST.	ALAMO CANYON DRIVE	/	/	/
		18" DIA	WATERLINE W/ NEC. VALVES FH'S, MJ'S & RJ'S	ALAMO CANYON DR.	PIPESTONE ROAD	AMOLE MESA AVENUE	/	/	/
		12-18" DIA	WATERLINE W/ NEC VALVES FH'S, MJ'S & RJ'S	AMOLE MESA AVE	LOTS 229	LOT 208	/	/	/
		NOTE:	WATER METER FOR LANDSCAPING IN THE PUBLIC RIGHT-OF-WAY						

SIA Sequence #	COA DRC Project #	Size	Type of Improvement	Location	From	To	Private Inspector	City Inspector	City Cnst Engineer
			ONSITE PUBLIC SANITARY SEWER IMPROVEMENTS						
		8" DIA	SANITARY SEWER W/ NEC. MH'S & SERVICES	FOUR MILE ROAD	PIPESPRING STREET	LOTS 261/262	/	/	/
		8" DIA	SANITARY SEWER W/ NEC MH'S & SERVICES	CORONA RANCH RD	PIPESPRING STREET	LOTS 291/292	/	/	/
		8" DIA	SANITARY SEWER W/ NEC. MH'S & SERVICES	WALNUT CANYON RD	PIPESPRING STREET	LOTS 328/329	/	/	/
		8" DIA	SANITARY SEWER W/ NEC. MH'S & SERVICES	BUCK ISLAND ROAD	WEST STUB TERMINUS	LOTS 352/353	/	/	/
		8" DIA	SANITARY SEWER W/ NEC. MH'S & SERVICES	PIPESTONE ROAD	PIPESPRING STREET	LOTS 208/356	/	/	/
		8" DIA	SANITARY SEWER W/ NEC. MH'S & SERVICES	PIPESPRING STREET	FOUR MILE ROAD	PIPESTONE ROAD	/	/	/
		8" DIA	SANITARY SEWER W/ NEC. MH'S & SERVICES	DEVILS TOWER ST	WALNUT CANYON RD	PIPESTONE ROAD	/	/	/
		8" DIA	SANITARY SEWER W/ NEC. MH'S & SERVICES	MOUNTAINTOP DR	BUCK ISLAND ROAD	PIPESTONE ROAD	/	/	/
		8" DIA	SANITARY SEWER W/ NEC. MH'S & SERVICES	PUBLIC EASEMENT LOT 224	WEST BOUNDARY	PIPESPRING STREET	/	/	/

NOTES: 1 LANDSCAPE MAINTENANCE AGREEMENT FOR LANDSCAPING IN THE PUBLIC RIGHT-OF-WAY
2 PERIMETER WALLS PER DRB APPROVED PERIMETER WALL DESIGN
3 WALL AND LANDSCAPING CERTIFICATION FROM REGISTERED ENGINEER AND/OR REGISTERED LANDSCAPE ARCHITECT REQUIRED PRIOR TO RELEASE OF FINANCIAL GUARANTEES.

SCOTT STEFFEN	01/25/05	[signature]	1/26/05	Christina Sandoval	1/26/05
PREPARED BY: PRINT NAME	DATE	DRB CHAIR	DATE	PARKS & RECREATION DEPARTMENT	DATE
BOHANNAN HUSTON INC.		[signature]	1-26-05	Lynn M. Mann	1-26-05
FIRM:		TRANSPORTATION DEVELOPMENT	DATE	AMAFCA	DATE
[signature]	1/25/05	[signature]	1/26/05	Bradley L. Bingham	
SIGNATURE	DATE	UTILITY DEVELOPMENT	DATE	CITY ENGINEER	DATE
MAXIMUM TIME ALLOW TO CONSTRUCT IMPROVEMENTS WITHOUT A DRB EXTENSION		N/A			
		NEW MEXICO UTILITIES INC	DATE		DATE

DESIGN REVIEW COMMITTEE REVISIONS

REVISION	DATE	DRC CHAIR	USER DEPARTMENT	AGENT/OWNER

ONE STOP SHOP
CITY OF ALBUQUERQUE PLANNING DEPARTMENT
Development & Building Services

PAID RECEIPT

APPLICANT NAME CURB INC

AGENT BOHANNAN HUSTON INC

ADDRESS 7500 JEFFERSON NE

PROJECT & APP # 1003429/06DRB00003

PROJECT NAME SIERRA RANCH SUBDIVISION

$ 20.00 **441032/3424000 Conflict Management Fee**

$ 50.00 **441006/4983000 DRB Actions**

$ _____ **441006/4971000 EPC/AA/LUCC Actions & All Appeals**

$ _____ **441018/4971000 Public Notification**

$ _____ **441006/4983000 DRAINAGE PLAN REVIEW OR TRAFFIC IMPACT STUDY*****
( )Major/Minor Subdivision ( )Site Development Plan ( )Bldg Permit
( ) Letter of Map Revision ( )Conditional Letter of Map Revision
( ) Traffic Impact Study

$ 70.00 **TOTAL AMOUNT DUE**

****NOTE: If a subsequent submittal is required, bring a copy of this paid receipt with you to avoid an additional charge.**

DUPLICATE
City Of Albuquerque
Treasury Division

1/3/2006 10:41AM LOC: ANNX
RECEIPT# 00055684 WS# 007 TRANS# 0017
Account 441032 Fund 0000
Activity 3424000 TRSKAL
Trans Amt $70.00
J24 Misc

$20.00
Thank You

Counterreceipt.doc 6/21/04

DUPLICATE
City Of Albuquerque
Treasury Division

1/3/2006 10:41AM LOC: ANNX
RECEIPT# 00055685 WS# 007 TRANS# 0017
Account 441006 Fund 0000
Activity 4983000 TRSKAL
Trans Amt $70.00
J24 Misc

$50.00
VI $70.00
CHANGE $0.00

Thank You

City of Albuquerque

DEVELOPMENT PLAN REVIEW APPLICATION

	Supplemental form
SUBDIVISION	**S**
☒ Major Subdivision action	
☐ Minor Subdivision action	
☐ Vacation	**V**
☐ Variance (Non-Zoning)	
SITE DEVELOPMENT PLAN	**P**
☐ ...for Subdivision Purposes	
☐ ...for Building Permit	
☐ IP Master Development Plan	
☐ Cert. of Appropriateness (LUCC)	**L**

	Supplemental form
ZONING & PLANNING	**Z**
☐ Annexation	
☐ County Submittal	
☐ EPC Submittal	
☐ Zone Map Amendment (Establish or Change Zoning	
☐ Sector Plan (Phase I, II, III)	
☐ Amendment to Sector, Area, Facility or Comprehensive Plan	
☐ Text Amendment	
APPEAL / PROTEST of...	**A**
☐ Decision by: DRB, EPC, LUCC, Planning Director or Staff, ZHE, Zoning Board of Appeals	

PRINT OR TYPE IN BLACK INK ONLY. The applicant or agent must submit the completed application in person to the Planning Department Development Services Center, 600 2nd Street NW, Albuquerque, NM 87102. Fees must be paid at the time of application. Refer to supplemental forms for submittal requirements.

APPLICANT INFORMATION:

NAME: CURB, INC. PHONE: 899-9656
ADDRESS: 5160 SAN FRANCISCO NE FAX: 875-1723
CITY: ALBUQUERQUE STATE NM ZIP 87109 E-MAIL: ____
Proprietary interest in site: OWNER
AGENT (if any): BOHANNAN HUSTON INC. PHONE: 823-1000
ADDRESS: 7500 JEFFERSON NE FAX: 798-7988
CITY: ALBUQUERQUE STATE NM ZIP 87109 E-MAIL: ____

DESCRIPTION OF REQUEST: FINAL PLAT APPROVAL

Is the applicant seeking incentives pursuant to the Family Housing Development Program? ☐ Yes. ☒ No.

SITE INFORMATION: ACCURACY OF THE LEGAL DESCRIPTION IS CRUCIAL! ATTACH A SEPARATE SHEET IF NECESSARY.

Lot or Tract No. TRACT 16B, 16C EL RANCHO GRANDE Block: ____ Unit: ____

Subdiv. / Addn. SIERRA RANCH SUBDIVISION

Current Zoning: R-LT R-D Proposed zoning: ____

Zone Atlas page(s): N-8 No. of **existing** lots: 2 No. of **proposed** lots: 383

Total area of site (acres): 61.2 Density if applicable: dwellings per gross acre: ____ dwellings per net acre: ____

Within city limits? ☒ Yes. No ☐, but site is within 5 miles of the city limits (DRB jurisdiction.) Within 1000FT of a landfill? NO

UPC No. 100805446943510102 MRGCD Map No. ____

LOCATION OF PROPERTY BY STREETS: On or Near: GIBSON BLVD. SW
Between: ____ and ____

CASE HISTORY:

List **any** current or prior case number that may be relevant to your application (Proj., App., DRB-, AX_,Z_, V_, S_, etc.): DRB# 1003429

Check-off if project was previously reviewed by Sketch Plat/Plan ☐, or Pre-application Review Team ☐. Date of review: ____

SIGNATURE _____ DATE 6/13/2005

(Print) SCOTT STEFFEN ☐ Applicant ☒ Agent

FOR OFFICIAL USE ONLY Form revised 10/03

☐ **INTERNAL ROUTING**

	Application case numbers	Action	S.F.	Fees
☑ All checklists are complete	05DRB - ____ - 00995	FP	5(3)	$ Ø
☑ All fees have been collected	____ - ____ - ____	____	____	$ ____
☑ All case #s are assigned	____ - ____ - ____	____	____	$ ____
☑ AGIS copy has been sent	____ - ____ - ____	____	____	$ ____
☑ Case history #s are listed	____ - ____ - ____	____	____	$ ____
☒ Site is within 1000ft of a landfill				Total
☒ F.H.D.P. density bonus	Hearing date ____			$ Ø
☒ F.H.D.P. fee rebate				

6-14-05
Planner signature / date

Project # 1003429

Tina Ranch

FORM S(3): SUBDIVISION - D.R.B. MEETING (UNADVERTISED) OR INTERNAL ROUTING

❑ **SKETCH PLAT REVIEW AND COMMENT** **YOUR ATTENDANCE IS REQUIRED.**

__ Scale drawing of the proposed subdivision plat (folded to fit into an 8.5" by 14" pocket) **6** copies for unadvertised meetings. Sketches are not reviewed through internal routing.
__ Site sketch with measurements showing structures, parking, Bldg. setbacks, adjacent rights-of-way and street improvements, etcetera, if there is any existing land use (folded to fit into an 8.5" by 14" pocket) **6** copies.
__ Zone Atlas map with the entire property(ies) precisely and clearly outlined and crosshatched (to be photocopied)
__ Letter briefly describing, explaining, and justifying the request
__ Any original and/or related file numbers are listed on the cover application

❑ **MAJOR SUBDIVISION EXTENSION OF PRELIMINARY PLAT** **Your attendance is required.**

__ Preliminary Plat reduced to 8.5" x 11"
__ Zone Atlas map with the entire property(ies) precisely and clearly outlined and crosshatched (to be photocopied)
__ Letter briefly describing, explaining, and justifying the request
__ Copy of previous D.R.B. approved infrastructure list
__ Copy of the LATEST Official D.R.B. Notice of approval for Preliminary Plat Extension request
__ Any original and/or related file numbers are listed on the cover application

Extensions are not reviewed through internal routing.
Extension of preliminary plat approval expires after one year.

☒ **MAJOR SUBDIVISION FINAL PLAT APPROVAL** **Your attendance is required.**

✓ Proposed Final Plat (folded to fit into an 8.5" by 14" pocket) **6** copies for unadvertised meetings, **4** copies for internal routing.
✓ Design elevations & cross sections of perimeter walls **3 copies**
✓ Zone Atlas map with the entire property(ies) precisely and clearly outlined and crosshatched (to be photocopied)
✓ Original Mylar drawing of the proposed plat for internal routing only. Otherwise, bring Mylar to meeting.
✓ Property owner's and City Surveyor's signatures on the Mylar drawing
✓ SIA financial guaranty verification
__ Landfill disclosure and EHD signature line on the Mylar drawing if property is within a landfill buffer
✓ Any original and/or related file numbers are listed on the cover application
__ **DXF FILE AND HARD COPY OF FINAL PLAT DATA FOR AGIS IS REQUIRED.**

❑ **MINOR SUBDIVISION PRELIMINARY / FINAL PLAT APPROVAL** **Your attendance is required.**

__ Proposed Preliminary / Final Plat (folded to fit into an 8.5" by 14" pocket) **6** copies for unadvertised meetings, **4** copies for internal routing.
__ Site sketch with measurements showing structures, parking, Bldg. setbacks, adjacent rights-of-way and street improvements, etcetera, if there is any existing land use (folded to fit into an 8.5" by 14" pocket) **6** copies.
__ Zone Atlas map with the entire property(ies) precisely and clearly outlined and crosshatched (to be photocopied)
__ Letter briefly describing, explaining, and justifying the request
__ Original Mylar drawing of the proposed plat for internal routing only. Otherwise, bring Mylar to meeting.
__ Property owner's and City Surveyor's signatures on the Mylar drawing
__ Landfill disclosure and EHD signature line on the Mylar drawing if property is within a landfill buffer
__ **Signed** Pre-Annexation Agreement if Annexation required.
__ Fee (see schedule)
__ Any original and/or related file numbers are listed on the cover application
__ Infrastructure list if required **(verify with DRB Engineer)** **NO INTERNAL ROUTING**
__ **DXF FILE AND HARD COPY OF FINAL PLAT DATA FOR AGIS IS REQUIRED.**

❑ **AMENDMENT TO PRELIMINARY PLAT (with minor changes)** **Your attendance is required.**
❑ **AMENDMENT TO INFRASTRUCTURE LIST (with minor changes)**
❑ **AMENDMENT TO GRADING PLAN (with minor changes)**

PLEASE NOTE: There are no clear distinctions between significant and minor changes with regard to subdivision amendments. Significant changes are those deemed by the DRB to require public notice and public hearing.

__ Proposed Amended Preliminary Plat, Infrastructure List, and/or Grading Plan (folded to fit into an 8.5" by 14" pocket) **6** copies for unadvertised meetings.
__ Original Preliminary Plat, Infrastructure List, and/or Grading Plan (folded to fit into an 8.5" by 14" pocket) **6** copies for unadvertised meetings
__ Zone Atlas map with the entire property(ies) precisely and clearly outlined and crosshatched (to be photocopied)
__ Letter briefly describing, explaining, and justifying the request
__ Original Mylar drawing of the proposed amended plat for internal routing only. Otherwise, bring Mylar to meeting.
__ Property owner's and City Surveyor's signatures on the Mylar drawing, if the plat is being amended
__ Any original and/or related file numbers are listed on the cover application

Amended preliminary plat approval expires after one year

.

I, the applicant, acknowledge that any information required but not submitted with this application will likely result in deferral of actions.

Scott S Cl 6/13/05
Applicant name (print)

Applicant signature / date

Form revised **11/04**

☐ Checklists complete
☐ Fees collected
☐ Case #s assigned
☐ Related #s listed

Application case numbers
05 DRB - ____ - 00995
____ - ____ - ____
____ - ____ - ____

Andrew Garcia 6-14-05
Planner signature / date

Project # 1003429

Bohannan Huston Inc.

Courtyard I
7500 Jefferson St. NE
Albuquerque, NM
87109-4335

www.bhinc.com

voice: 505.823.1000
facsimile: 505.798.7988
toll free: 800.877.5332

June 13, 2005

Sheran Matson, Chair
Development Review Board
City of Albuquerque
P.O. Box 1293
Albuquerque, New Mexico 87103

Re: Final Plat Approval
Sierra Ranch Unit 1 Subdivision DRB# 1003429

Dear Sheran:

We are requesting final plat approval of the Sierra Ranch Unit 1 subdivision. This project was approved for preliminary plat on January 26, 2005 and consists of 207 residential lots on 32.84 acres of land (Tract 16-B El Rancho Grande) located south of Gibson Boulevard and west of Messina Drive in southwest Albuquerque. In addition, this plat shows the vacation of public easements and public right-of-way on Tracts 16-A and 16-C, El Rancho Grande that were approved at the preliminary plat hearing. Tracts 16-A and 16-C are to be a future City of Albuquerque park site and Sierra Ranch Unit 2 subdivision, respectively.

Enclosed for review and approval by the Development Review Board (DRB) are copies of the following information:

- Development Review Applications
- Six (6) copies of the Final Plat, and
- Zone Atlas Map showing the location of the property
- SIA Approval
- Design Elevations walls (3) copies
- Letter justifying request

Please place this item on the DRB Agenda to be heard on June 22, 2005. If you have any questions or require additional information, please contact me.

Sincerely,

Scott J. Steffen, P.E.
Project Engineer
Community Development and Planning Group

SS
Enclosure

ENGINEERING ▲
SPATIAL DATA ▲
ADVANCED TECHNOLOGIES ▲

16F EL RANCHO GRANDE

EL RANCHO GRANDE 1003429 16E

16D

R-D

R-LT A1

GIBSON

SANDY RIDGE

GHOST RANCH

SANDY CREEK

SANDY TRAIL (UNIT 14)

EL RANCHO GRANDE 16B

16C 1003429

R-D

R-LT

EL RANCHO GRAND

1003429

16A

R-L

S 95 27 2A

2B

R-D

RIO BRAVO PARTNERS

S 95 27

2D

B1

R-LT

1002516

2C

S 95 27

R-D

R-LT

A

For more current information and more details visit: http://www.cabq.gov/gis

Albuquerque Geographic Information System

Map amended through: **Apr 22, 2005**

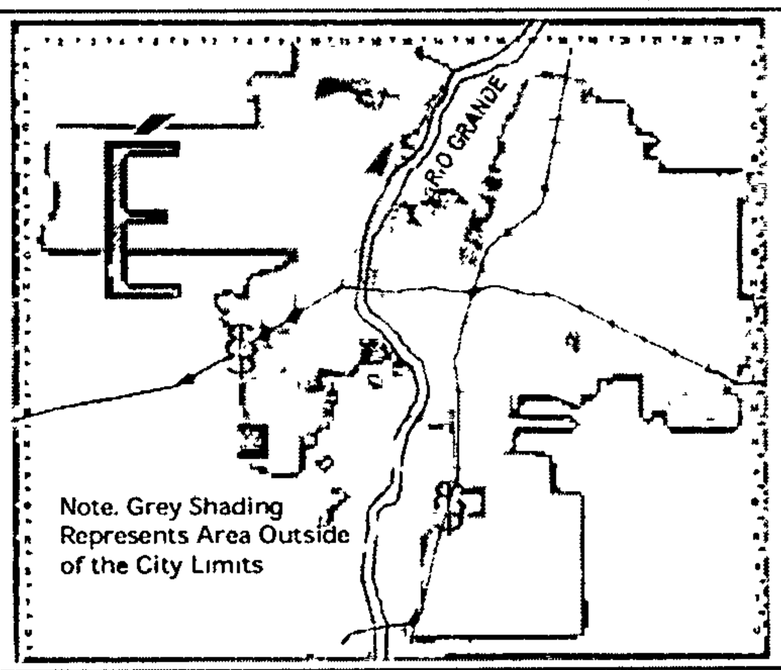

Zone Atlas Page:

N-8-Z

Selected Symbols

- Outside City Limits
- Sector Plans
- Design Overlay Zones
- City Historic Zone
- H-1 Buffer Zone
- Petroglyph Mon
- Escarpment
- 2 Mile Airport Zone
- Airport Noise Contours
- Wall Overlay Zone

0 750 1,500 Feet

No. of Lots: 207
Nearest Major Streets
Gibson & Messina SW

FIGURE 12

SUBDIVISION IMPROVEMENTS
AGREEMENT-PUBLIC AND/OR PRIVATE
(Procedure B)

AGREEMENT TO CONSTRUCT
PUBLIC AND/OR PRIVATE SUBDIVISION IMPROVEMENTS

THIS AGREEMENT is made this 13th day of June, 2005, by and between the City of Albuquerque, New Mexico ("City"), a municipal corporation, whose address is P. O. Box 1293 (One Civic Plaza), Albuquerque, New Mexico 87103, and Curb, Inc. ("Subdivider"), a [state the type of business entity, for instance, "New Mexico corporation," "general partnership," "joint venture," "individual," etc.:] New Mexico corporation, whose address is 5160 San Francisco NE Abq., 87109 and whose telephone number is 881-9190, is made in Albuquerque, New Mexico, and is entered into as of the date of final execution of this Agreement.

1. Recital. The Subdivider is developing certain lands within the City of Albuquerque, Bernalillo County, New Mexico, known as [existing legal description:] see attached Exhibit "B", recorded on _____ in the records of the Bernalillo County Clerk at Book _____, pages _____ through _____ (the "Subdivision"). The Subdivider certifies that the Subdivision is owned by [state the name of the present real property owner exactly as shown on the real estate document conveying title in the Subdivision to the present owner:] Curb, Inc. ("Owner").

The Subdivider has submitted and the City has approved a preliminary plat or Site Development Plan identified as Sierra Ranch Subdivision describing Subdivider's Property.

As a result of the development of the Subdivision, the Subdivision Ordinance ("S.O.") and/or the Zoning Code, Section 14-16-3-1], require the Subdivider, at no cost to the City, to install certain public and/or private Improvements, which are reasonably related to the development of the Subdivision, or to financially guarantee the construction of the public and/or private improvements as a prerequisite to approval of the final plat of, or the Site Development Plan for the Subdivision.

2. Improvements and Construction Deadline. The Subdivider agrees to install and complete the public and/or private improvements described Exhibit A, the required infrastructure listing ("Improvements"), to the satisfaction of the City, on or before the 26th day of January, 2007 ("Construction Completion Deadline"), at no cost to the City. The Improvements are shown in greater detail on the Subdivider's proposed and approved plans, which have been filed with the City Engineer and are identified as Project No. 757581.

Note: To compute the Construction Completion Deadline: If a final plat will be filed after Subdivider meets the requirements of this Agreement, the Construction Completion Deadline can be no later than two years after execution of this Agreement. (See Subdivision Ordinance Section 14-14-3.) If a final plat will not be filed pursuant to this Agreement, the Construction Completion Deadline can be no later than one year after approval of the preliminary plat by the Development Review Board ("DRB"), unless

2005083909
6279957
Page: 1 of 7
06/13/2005 03:14P
Bk-A98 Pg-3656
Mary Herrera Bern. Co. AGRE R 21.00

the DRB grants an extension, not to exceed one additional year per extension, and the Subdivider processes an amendment to the Agreement. (See Subdivision Ordinance Section 14-14-3.) If this Agreement, with any amendments does not utilize the maximum time allowed for completion of construction, the Subdivider may obtain an extension of the Construction Completion Deadline if Subdivider shows adequate reason for the extension.

3. Work Order Requirements. The City agrees to issue a Work Order after:

A. The Subdivider causes to be submitted all documents, and meets all requirements listed in Development Process Manual, Volume 1, Chapter 5, Work Order Process, and figure 1, including submitting a Certificate of Insurance in a form acceptable to the City. The certificate must establish that the Subdivider has procured or has caused to be procured public liability insurance in the amount of not less than One Million Dollars ($1,000,000) combined single limit for accidents or occurrences which cause bodily injury, death or property damage as a result of any condition of the Subdivision, the Improvements or the Subdivider's construction activities within, or related to the Subdivision. The insurance policy must name the City of Albuquerque, its employees and elected officials, as their interest may appear, as additional insured. The Subdivider must maintain the insurance until the City accepts the public Improvements and/or approves the private Improvements. The cancellation provision must provide that, if the policy is either canceled prior to the expiration date of the policy or is materially changed or not renewed, the issuing company will mail 30 days written notice to the City, attention City Engineer.

B. The Subdivider complies with all applicable laws, ordinances and regulations, including, but not limited to the City Excavation Ordinance and Sidewalk Ordinance, and pays the following required engineering, staking, testing fees, and other related City fees and County Clerk recording fees:

Type of Fee	Amount
Engineering Fee	3.25% of Actual Construction Cost
Excavation And Sidewalk Ordinance, Street Restoration Fees	As required per City-approved estimate. (Figure 7)

(Note: The Subdivider must pay the City all City fees which have been incurred during construction before the City will accept the public Improvements.

4. Surveying, Inspection and Testing. The Improvements shall be inspected, surveyed and tested in accordance with all applicable laws, ordinances, and regulations, and according to the following terms:

A. Construction Surveying. Construction surveying for the construction of the public Improvements shall be performed by Aldrich Land Surveys, and construction surveying of the private Improvements shall be performed by Aldrich Land Surveys. If the construction surveying is performed by an entity other than the City, the City may monitor the construction surveying and the Subdivider shall ensure that the construction surveying entity provides all construction surveying field notes, plats, reports and related data to the City which the City requires for review. Record drawings shall be provided by the entity performing the survey. The Subdivider shall pay the City a reasonable fee for any construction surveying performed by the City.

B. Construction Inspection Methods. Inspection of the construction of the public Improvements shall be performed by Mark Goodwin & Associates, and inspection of the private Improvements shall be performed by Bohannan Huston, Inc., both New Mexico Registered Professional Engineers. If the inspection is performed by an entity other than the City, the City may monitor the inspection and the Subdivider

2005083909
6279957
Page: 2 of 7
06/13/2005 03:14P
Bk-A98 Pg-3656
Mary Herrera Bern. Co. AGRE R 21.00

shall ensure that the inspecting entity provides all inspection results, reports and related data to the City which the City requires for review. The City retains the right to perform its own general overall inspection of the construction project at any time prior to final acceptance of the Improvements, if deemed necessary or advisable by the City Engineer. The Subdivider shall pay the City a reasonable fee for the level of inspection performed by the City.

C. Field Testing. Field testing of the construction of the public Improvements shall be performed by Vinyard & Assoc., and field testing of the private Improvements shall be performed by Vinyard & Assoc., both certified testing laboratories under the supervision of a New Mexico Registered Professional Engineer, in accordance with the current City of Albuquerque Standard Specifications for Public Works Construction. If any field testing is performed by an entity other than the City, the City may monitor the field testing and the Subdivider shall ensure that the field testing entity provides all field testing results, reports and related data to the City which the City requires for review. The Subdivider shall pay the City a reasonable fee for any field testing performed by the City.

D. Additional Testing. The City retains the right to perform all additional testing which the City Engineer deems is necessary or advisable, and the Subdivider shall pay the City a reasonable fee therefor.

5. Financial Guaranty. If final plat approval is not requested prior to construction of the Subdivision, a financial guaranty is not required. If final plat approval is requested, the Subdivider must provide the City with a financial guaranty in an amount of not less than 125% of the estimated cost of constructing the Improvements, as approved by the City Engineer. The financial guaranty must be irrevocable and may be in the form of a letter of credit, escrow deposit or loan reserve letter issued by a Federally Insured Financial Institution; a bond issued by a surety qualified to do business in New Mexico; or other pledge of liquid assets which meets all City requirements. The City must be able to call the financial guaranty at any time within the sixty (60) days immediately following the Construction Completion Deadline.

To meet the Subdivision Ordinance requirements, the Subdivider has acquired or is able to acquire the following "Financial Guaranty:"

Type of Financial Guaranty: Municipal Lien
Amount: $ 3,485,175.15 Name of Financial Institution or Surety
Date City first able to call Guaranty: January 26, 2007
[Construction Completion Deadline]: January 26, 20 07
If Guaranty other than a Bond, last day City able to call Guaranty is: March 29, , 20 07
Additional information: N/A

6. Notice of Start of Construction. Before construction begins, the Subdivider shall deliver an acceptable Notice to Proceed to the City and shall arrange or a preconstruction conference and all required inspections.

7. Completion, Acceptance and Termination. When the City receives Subdivider's final acceptance package, the City shall review it for completeness and accuracy. (See DPM Volume 1, Chapter 5, Work Order Process, Step 9.) If the package is acceptable, the City shall approve the package and issue a Certificate of Completion and Acceptance for the public Improvements and a Certificate of Completion for the private Improvements. Thereafter, the Subdivider's obligations to the City pursuant to this Agreement shall terminate, with the exception of the bond or other guarantee which the Subdivider has provided to assure the materials and workmanship, as required by the Subdivision Ordinance. After the City approves the final acceptance package, the City will promptly release this Agreement and the Financial Guaranty.

2005083909
6279957
Page: 3 of 7
06/13/2005 03:14P

8. Conveyance of Property Rights. When the Improvements are completed, if the City does not own the real property upon or in which the public Improvements are constructed, the Subdivider will convey to the City all real and personal property rights which the City deems reasonably necessary, and all public Improvements, free and clear of all claims, encumbrances and liens before the City will accept the public Improvements. Conveyance may be made by appropriate dedication on the final plat of the Subdivision.

9. Reduction of Financial Guaranty Upon Partial Completion. The Subdivider shall be entitled to a reduction of the Financial Guaranty as a result of completing construction of part of the Improvements if the following conditions are met:

A. Loan Reserve Financial Guaranty. If a loan reserve letter was provided as the Financial Guaranty, the Subdivider must follow the procedures and meet the requirements detailed in the Development Process Manual, Volume 1, Chapter 5.

B. Non-Loan Reserve Financial Guaranty. If a Financial Guarantee other than a loan reserve letter has been provided, the completed Improvements must be free-standing, functionally independent of any Improvements which have not yet been completed and completed in substantial compliance with the approved construction plans, as determined by City on-site inspection in order to qualify for a Financial Guaranty reduction. If the Improvements which have been completed meet all City requirements, the City Engineer will estimate the cost of completing the remaining Improvements. Thereafter, the subdivider must submit the following documents to the City for review and approval:

(1) A revised Financial Guaranty in an amount of not less than 125% of the cost of completing the remaining Improvements, as estimated by the City;

(2) A bond or other instrument acceptable to the City, which guarantees the completed Improvements against defective materials and workmanship for the period required by the Subdivision Ordinance.

(3) Conveyance of real and personal property rights which meet the requirements of section 8 of this Agreement.

After the City receives and approves the required documents, the City shall issue a Partial Certificate of Completion and Acceptance for the completed public Improvements and a Certificate of Partial Completion for the completed private Improvements.

10. Indemnification. Until the Improvements are accepted by the City, the Subdivider shall be solely responsible for maintaining the premises upon which the Improvements are being constructed in a safe condition. The Subdivider agrees to defend, indemnify and hold harmless the City and its officials, agents and employees from any claims, actions, suits or other proceedings arising from or out of the negligent acts or omissions of the Subdivider, its agents, representatives, contractors or subcontractors or arising from the failure of the Subdivider, its agents, representatives, contractors or subcontractors to perform any act or duty required of the Subdivider herein; provided, however, to the extent, if at all, Section 56-7-1 NMSA 1978 is applicable to this Agreement, this Agreement to indemnify will not extend to liability, claims, damages, losses or expenses, including attorney fees, arising out of (1) the preparation or approval of maps, drawings, opinions, reports, surveys, change orders, designs or specifications by the indemnitee, or the agents or employees of the indemnitee; or (2) the giving of or the failure to give directions or instructions by the indemnitee, where such giving or failure to give directions or instructions is the primary cause of bodily injury to persons or damage to property. The indemnification required hereunder shall not be limited as a result of the specifications of any applicable insurance coverage. Nothing herein is intended to impair any right or immunity under the laws of the State of New Mexico.

2005083909
6279957
Page: 4 of 7
06/13/2005 03:14P
Bk-A98 Pg-3656
Mary Herrera Bern. Co. AGRE R 21.00

11. Assignment. This Agreement shall not be assigned without the prior written consent of the City and the Subdivider and the express written concurrence of any financial institution or surety which has undertaken to guarantee the completion of the Improvements. The City's approval will not be withheld unreasonably. If so assigned, this Agreement shall extend to and be binding upon the successors and assigns of the parties hereto.

12. Release. If the Subdivision or any part thereof is sold, conveyed or assigned, the City will not release the Subdivider from its obligations under this Agreement and will continue to hold the Subdivider responsible for all Improvements until a successor in interest to the Subdivider has entered into a Subdivision Improvements Agreement with the City. Thereafter, if the Subdivider's successor in interest has provided a substitute financial guaranty acceptable to the City, the City will release this Agreement and any related Financial Guaranty.

13. Payment for Incomplete Improvements. If the Subdivider fails to satisfactorily complete construction of the Improvements by the Construction Completion Deadline, the City may construct or cause the Improvements to be constructed as shown on the final plat and in the approved plans and specifications. The Subdivider shall be jointly and severally liable to pay to, and indemnify the City for the total cost, including, but not limited to engineering, legal and contingent costs, together with any damages, either direct or consequential, which the City may sustain as a result of Subdivider's failure to perform as required by this Agreement. If the direct or indirect costs and damages to the City exceed the amount of the City's Claim of Lien or any Financial Guaranty, the Subdivider shall be liable to, and shall pay, the City for all such costs and damages. The surety or sureties shall be jointly and severally liable to pay to and indemnify the City for the total cost to the extent of their obligations pursuant to any Financial Guaranty.

14. Binding on Subdivider's Property. The provisions of this Agreement constitute covenants running with Subdivider's Property for the benefit of the City and its successors and assigns until terminated, and are binding on the Subdivider and the Owner and their heirs, successors and assigns.

15. Notice. For purposes of giving formal written notice, including notice of change of address, the Subdivider's and the City's addresses are as stated in the first paragraph of this Agreement. Notice may be given either in person or by certified U.S. mail, postage paid. Notice will be considered to have been received within six days after the notice is mailed if there is no actual evidence of receipt.

16. Entire Agreement. This Agreement contains the entire agreement of the parties and supersedes any and all other agreements or understandings, oral or written, whether previous to the execution hereof or contemporaneous herewith.

17. Changes to Agreement. Changes to this Agreement are not binding unless made in writing, signed by both parties.

18. Construction and Severability. If any part of this Agreement is held to be invalid or unenforceable, the remainder of the Agreement will remain valid and enforceable if the remainder is reasonably capable of completion.

19. Captions. The captions to the sections or paragraphs of this Agreement are not part of this Agreement and will not affect the meaning or construction of any of its provisions.

20. Form not Changed. Subdivider agrees that changes to this form are not binding unless initialed by the subdivider and signed by the City's Legal Department on this form.

21. Authority to Execute. If the Subdivider signing below is not the Owner of the Subdivision, the Owner must execute the Power of Attorney below.

Mary Herrera Bern. Co. RCPF

2005083909
6279957
Page: 5 of 7
06/13/2005 03:14P

Executed on the date stated in the first paragraph of this Agreement.

SUBDIVIDER: Curb Inc.

By [Signature]:
Name: Bo K. Johnson
Title: Exe. Vice President
Dated: 5-31-05

CITY OF ALBUQUERQUE

City Engineer
Dated: 6-13-05

Vil
6/13/05

6/13/05

SUBDIVIDER'S NOTARY

STATE OF New Mexico)
) ss.
COUNTY OF Bernalillo)

This instrument was acknowledged before me on 31st day of May, 2005 by [name of person:] Bo K. Johnson, [title or capacity, for instance, "President" or "Owner":] Exe. Vice President of [Subdivider:] Curb, Inc.

Notary Public

My Commission Expires:
10-1-07

CITY'S NOTARY

STATE OF NEW MEXICO)
) ss.
COUNTY OF BERNALILLO)

OFFICIAL SEAL
RICHARD J. SQUIRES
NOTARY PUBLIC-STATE OF NEW MEXICO
My commission expires: 10/1/07

This instrument was acknowledged before me on 13th day of June, 2005 by Richard Dourte, City Engineer of the City of Albuquerque, a municipal corporation, on behalf of said corporation.

Gloria D Saavedra
Notary Public

My Commission Expires:
11-25-2007

EXHIBIT A AND POWER OF ATTORNEY ATTACHED

Mary Herrera Bern. Co. AGRE R 21.00
2005083909
6279957
Page: 6 of 7
06/13/2005 03:14P
Bk-A98 Pg-3656

EXHIBIT "B"

Tract 16-B, as shown on Bulk Land Plat for Tracts 16-A, 16-B, 16-C, 16-D, 16-E and 16-F, El Rancho Grande, filed in the office of the County Clerk of Bernalillo County, New Mexico, on January 31, 2005, in Book 2005C, Page 41, Document Number 2005014732.

2005083909
6279957
Page: 7 of 7
06/13/2005 03:14P
Mary Herrera Bern. Co. AGRE R 21.00 Bk-A98 Pg-3656

ONE STOP SHOP
CITY OF ALBUQUERQUE PLANNING DEPARTMENT
Development & Building Services

PAID RECEIPT

APPLICANT NAME Curb Inc

AGENT Bshannan Huston

ADDRESS 7500 Jefferson NE.

PROJECT & APP # 1003429 / 05 DRB 00995

PROJECT NAME Sierra Ranch.

$ 20.00 **441032/3424000 Conflict Management Fee**

$ _____ **441006/4983000 DRB Actions**

$ _____ **441006/4971000 EPC/AA/LUCC Actions & All Appeals**

$ _____ **441018/4971000 Public Notification**

$ _____ **441006/4983000 DRAINAGE PLAN REVIEW OR TRAFFIC IMPACT STUDY*****
( )Major/Minor Subdivision ( )Site Development Plan ( )Bldg Permit
( ) Letter of Map Revision ( )Conditional Letter of Map Revision
( ) Traffic Impact Study

$ 20.00 **TOTAL AMOUNT DUE**

****NOTE: If a subsequent submittal is required, bring a copy of this paid receipt with you to avoid an additional charge.**

Counterreceipt.doc 6/21/04

City Of Albuquerque
Treasury Division

6/14/2005 9:44AM LOC: ANNX
RECEIPT# 00044337 WS# 007 TRANS# 0017
Account 441032 Fund 0110
Activity 3424000 TRSLJS
Trans Amt $20.00
J24 Misc $20.00
CA $20.00
CHANGE $0.00

Thank You

N

200 100 0 200

1" = 200'

Perimeter Wall Location

GENERAL NOTES:

1. PERIMETER WALL SHALL NOT EXCEED SIX FEET IN HEIGHT ABOVE STREET GRADE.
2. PERIMETER WALL SHALL NOT EXCEED EIGHT FEET IN HEIGHT ABOVE STREET GRADE IN ORDER TO RETAIN HIGHER GROUND ON THE PRIVATE PROPERTY SIDE.

KEYED NOTES:

(A) — (F) SEE ATTACHED DETAIL SHEETS.

Perimeter Wall Approved

DRB Chair

1/26/05

Date

Perimeter Wall Exhibit

DRB #

Subdivision Name: Sierra Ranch Subdivision

Zone Atlas Page: N-8

Nearest Intersection: Gibson Blvd. and Messina Drive

December, 2004

Approved: _____

P \050188\cdp\general\Exhibits\Wall_Submittal_overall.dwg
January 20, 2005 - 3:31pm

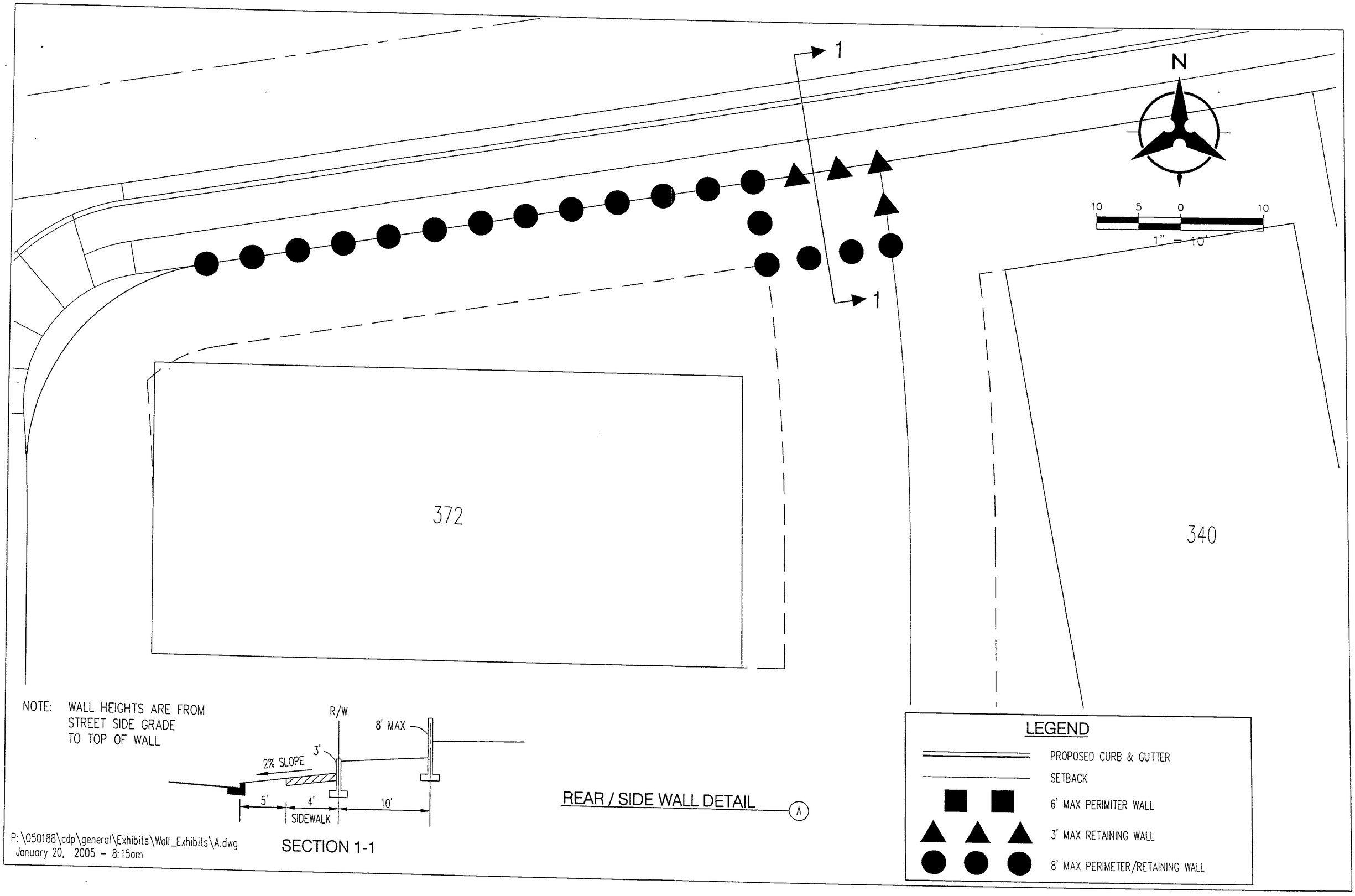

NOTE: WALL HEIGHTS ARE FROM STREET SIDE GRADE TO TOP OF WALL

SECTION 1-1

REAR / SIDE WALL DETAIL (A)

LEGEND

- PROPOSED CURB & GUTTER
- SETBACK
- 6' MAX PERIMITER WALL
- 3' MAX RETAINING WALL
- 8' MAX PERIMETER/RETAINING WALL

P:\050188\cdp\general\Exhibits\Wall_Exhibits\A.dwg
January 20, 2005 - 8:15am

366

365

N

10 5 0 10

1" = 10'

1

1

NOTE: WALL HEIGHTS ARE FROM STREET SIDE GRADE TO TOP OF WALL

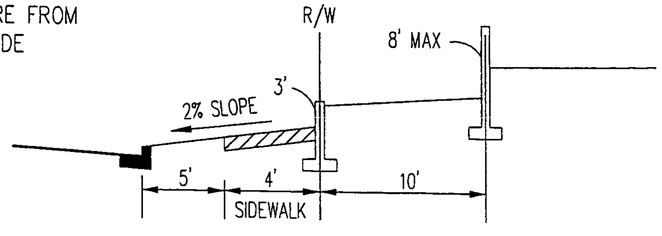

SECTION 1-1

REAR / SIDE WALL DETAIL (B)

LEGEND

- PROPOSED CURB & GUTTER
- SETBACK
- 6' MAX PERIMITER WALL
- 3' MAX RETAINING WALL
- 8' MAX PERIMETER/RETAINING WALL

P.\050188\cdp\general\Exhibits\Wall_Exhibits\B.dwg
January 20, 2005 - 8:13am

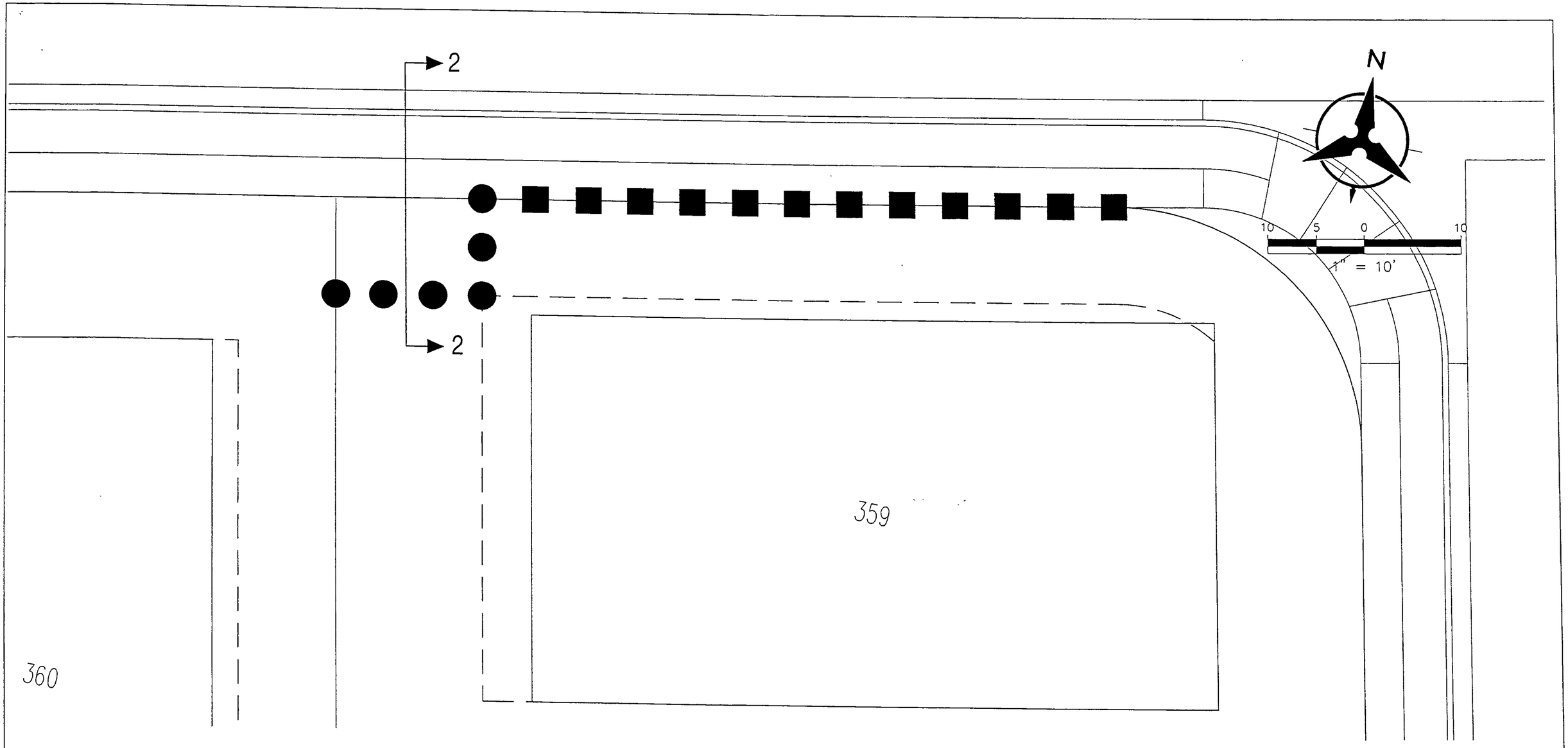

NOTE: WALL HEIGHTS ARE FROM STREET SIDE GRADE TO TOP OF WALL

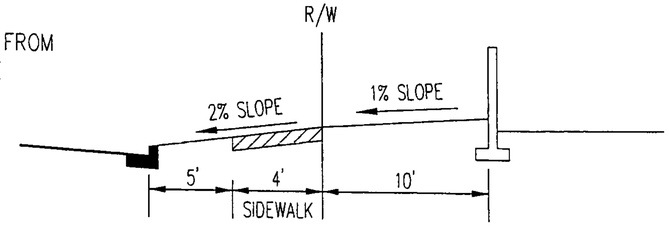

SECTION 2-2

REAR / SIDE WALL DETAIL (C)

LEGEND

- PROPOSED CURB & GUTTER
- SETBACK
- 6' MAX PERIMITER WALL
- 8' MAX PERIMETER/RETAINING WALL

P:\050188\cdp\general\Exhibits\Wall_Exhibits\C.dwg
January 19, 2005 - 3:18pm

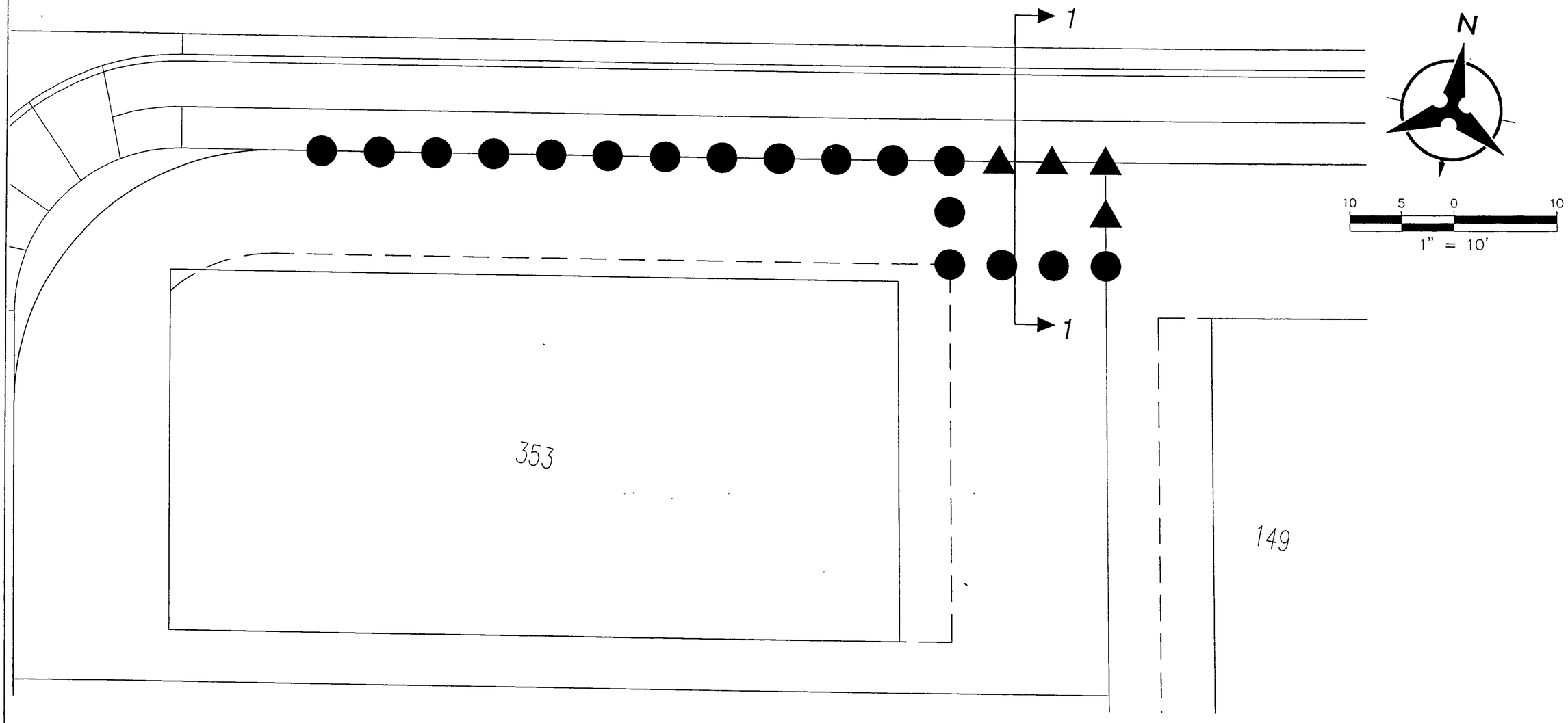

NOTE: WALL HEIGHTS ARE FROM STREET SIDE GRADE TO TOP OF WALL

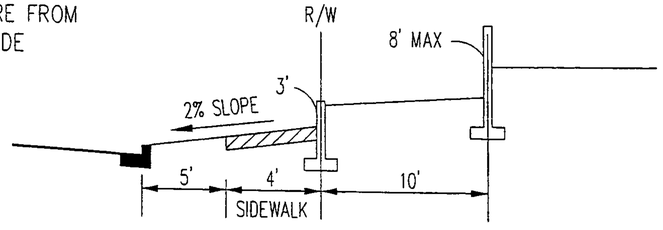

SECTION 1-1

REAR / SIDE WALL DETAIL (D)

LEGEND

- PROPOSED CURB & GUTTER
- SETBACK
- 6' MAX PERIMITER WALL
- 3' MAX RETAINING WALL
- 8' MAX PERIMETER/RETAINING WALL

P.\050188\cdp\general\Exhibits\Wall_Exhibits\D.dwg
January 20, 2005 - 8:13am

356

N

10 5 0 10

1" = 10'

1

1

NOTE: WALL HEIGHTS ARE FROM STREET SIDE GRADE TO TOP OF WALL

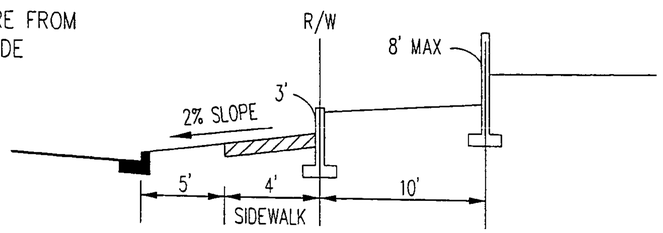

SECTION 1-1

REAR / SIDE WALL DETAIL (E)

LEGEND

- PROPOSED CURB & GUTTER
- SETBACK
- 6' MAX PERIMITER WALL
- 3' MAX RETAINING WALL
- 8' MAX PERIMETER/RETAINING WALL

P:\050188\cdp\general\Exhibits\Wall_Exhibits\E.dwg
January 20, 2005 - 8:10am

184

183

N

10 5 0 10

1" = 10'

2

2

NOTE: WALL HEIGHTS ARE FROM STREET SIDE GRADE TO TOP OF WALL

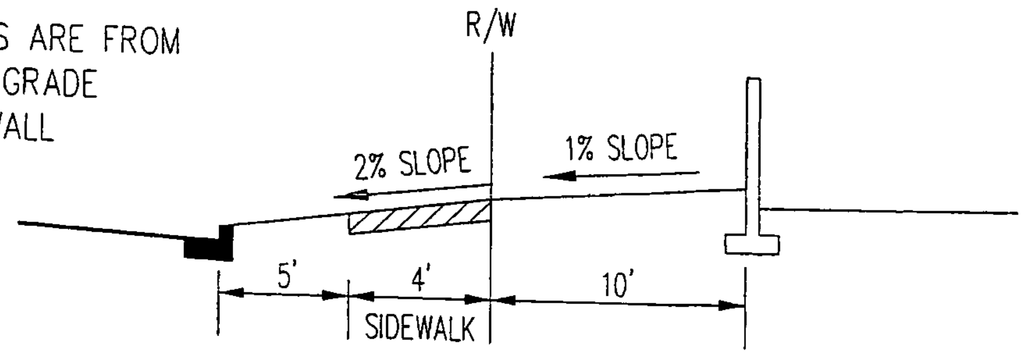

SECTION 2-2

REAR / SIDE WALL DETAIL (F)

LEGEND

- PROPOSED CURB & GUTTER
- SETBACK
- 6' MAX PERIMITER WALL
- 8' MAX PERIMETER/RETAINING WALL

P:\050188\cdp\general\Exhibits\Wall_Exhibits\F dwg
January 19, 2005 - 3:19pm

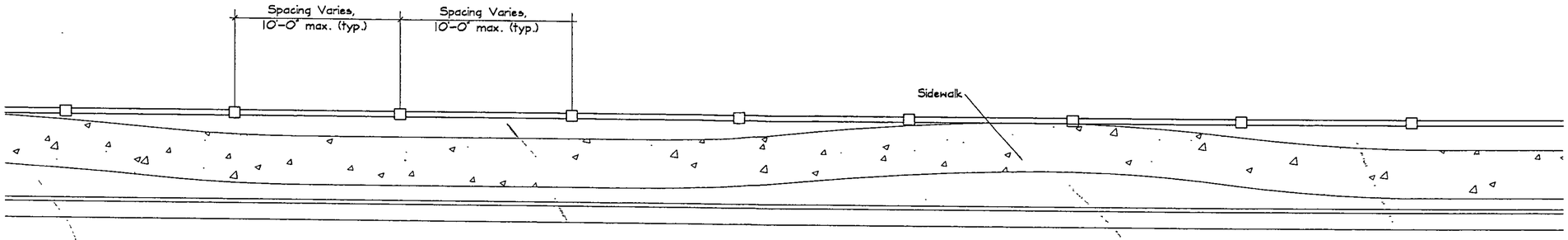

WALL PLAN

SCALE: None

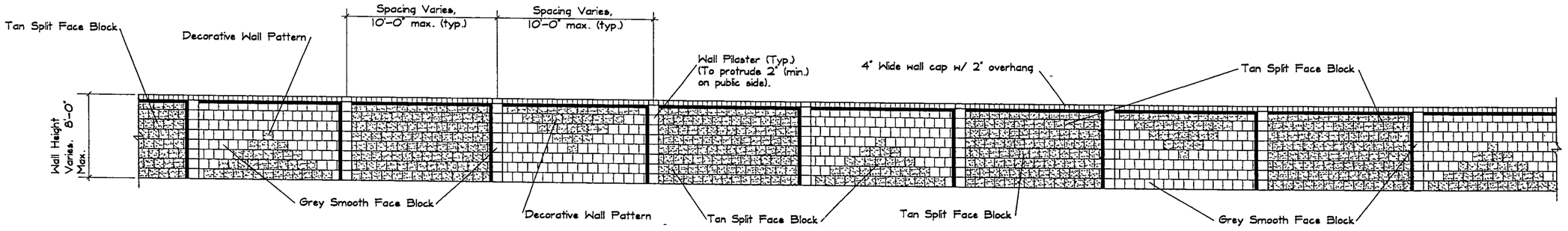

WALL ELEVATION

SCALE: None

P:\050188\cdp\general\Exhibits\Wall_submittal.dwg
December 16, 2004 - 1:22pm

Approved:_____

DRB #

Subdivision Name: Sierra Ranch Subdivision

Zone Atlas Page: N-8

Nearest Intersection: Gibson Blvd. and
Messina Drive

December, 2004

Current DRC
Project No

ORIGINAL

Claire

Date Submitted: January 25, 2005

Date Site Plan Approved:

Date Preliminary Plat Approved: 1/26/05

Date Preliminary Plat Expires 1/26/06

Figure 12

INFRASTRUCTURE LIST

EXHIBIT "A"
TO SUBDIVISION IMPROVEMENTS AGREEMENT
DEVELOPMENT REVIEW BOARD (D.R.B.) REQUIRED INFRASTRUCTURE LIST

SIERRA RANCH SUBDIVISION
PRELIMINARY PLAT

DRB Project No 1003429

APPLICATION NO. 04DRB-01950

Following is a summary of PUBLIC/PRIVATE Infrastructure required to be constructed or financially guaranteed for the above development. This Listing is not necessarily a complete listing. During the SIA process and/or in the review of the construction drawings, if the DRC Chair determines that appurtenant items and/or unforeseen items have not been included in the infrastructure listing, the DRC Chair may include those items in the listing and related financial guarantee Likewise, if the DRC Chair determines that appurtenant or non-essential items can be deleted from the listing, those items may be deleted as well as the related portions of the financial guarantees. All such revisions require approval by the DRC Chair, the User Department and agent/owner. If such approvals are obtained, these revisions to the listing will be incorporated administratively. In addition, any unforeseen items which arise during construction which are necessary to complete the project and which normally are the Subdivider's responsibility will be required as a condition of project acceptance and close out by the City.

SIA Sequence #	COA DRC Project #	Size	Type of Improvement	Location	From	To	Private Inspector	City Inspector	City Cnst Engineer
SIERRA RANCH SUBDIVISION - UNIT I									
			ONSITE PUBLIC ROADWAY IMPROVEMENTS						
		30' ~~EOA-F~~ F-F	ARTERIAL PAVING W/ PCC CURB & GUTTER, MEDIAN CURB AND PCC 6' WIDE SIDEWALK ON SOUTH SIDE ONLY	GIBSON BOULEVARD	CHACO CANYON DR	MESSINA DRIVE	/	/	/
		24' EOA-F	RESIDENTIAL PAVING W/ PCC CURB & GUTTER AND PCC 6' WIDE SIDEWALK ON WEST SIDE ONLY	MESSINA DRIVE	GIBSON BOULEVARD	AMOLE MESA AVENUE	/	/	/
		24' EOA-F	RESIDENTIAL PAVING W/ PCC CURB & GUTTER AND PCC 6' WIDE SIDEWALK ON NORTH SIDE ONLY	AMOLE MESA AVE	LOT 207	MESSINA DRIVE	/	/	/
		28' F-F	RESIDENTIAL PAVING W/ PCC CURB & GUTTER AND PCC 4' WIDE SIDEWALK ON BOTH SIDES*	FOUR MILE ROAD	LOTS 42/43	BISON SPRINGS STREET	/	/	/
		24' F-F	RESIDENTIAL PAVING W/ PCC CURB & GUTTER AND PCC 4' WIDE SIDEWALK ON NORTH SIDE ONLY*	FOUR MILE ROAD	BISON SPRINGS STREET	EAST STUB TERMINUS	/	/	/
		28' F-F	RESIDENTIAL PAVING W/ PCC CURB & GUTTER AND PCC 4' WIDE SIDEWALK ON BOTH SIDES*	CORONA RANCH RD	LOTS 76/77	BISON SPRINGS STREET	/	/	/
		28' F-F	RESIDENTIAL PAVING W/ PCC CURB & GUTTER AND PCC 4' WIDE SIDEWALK ON BOTH SIDES*	WALNUT CANYON RD	LOTS 109/110	BISON SPRINGS STREET	/	/	/
		48' F-F	RESIDENTIAL PAVING W/ PCC CURB & GUTTER AND PCC 6' WIDE SIDEWALK ON BOTH SIDES*	WALNUT CANYON RD	BISON SPRINGS STREET	MESSINA DRIVE	/	/	/
		28' F-F	RESIDENTIAL PAVING W/ PCC CURB & GUTTER AND PCC 4' WIDE SIDEWALK ON BOTH SIDES*	BUCK ISLAND ROAD	LOTS 148/149	BISON SPRINGS STREET	/	/	/

ORIGINAL

SIA Sequence #	COA DRC Project #	Size	Type of Improvement	Location	From	To	Private Inspector	City Inspector	City Cnst Engineer
		ONSITE PUBLIC ROADWAY IMPROVEMENTS (CONT.)							
		28' F-F	RESIDENTIAL PAVING W/ PCC CURB & GUTTER AND PCC 4' WIDE SIDEWALK ON BOTH SIDES*	PIPESTONE ROAD	LOTS 188/207	BIG SPRINGS ROAD	/	/	/
		36' F-F	RESIDENTIAL PAVING W/ PCC CURB & GUTTER AND PCC 4' WIDE SIDEWALK ON BOTH SIDES*	BIG SPRINGS ROAD	AMOLE MESA AVE	BISON SPRINGS STREET	/	/	/
		48' F-F	RESIDENTIAL PAVING W/ PCC CURB & GUTTER AND PCC 6' WIDE SIDEWALK ON BOTH SIDES*	CHACO CANYON DR	GIBSON BOULEVARD	FOUR MILE ROAD	/	/	/
		28' F-F	RESIDENTIAL PAVING W/ PCC CURB & GUTTER AND PCC 4' WIDE SIDEWALK ON BOTH SIDES*	SALADO CREEK ST	FOUR MILE ROAD	WALNUT CANYON ROAD	/	/	/
		28' F-F	RESIDENTIAL PAVING W/ PCC CURB & GUTTER AND PCC 4' WIDE SIDEWALK ON BOTH SIDES*	CARIZZO PLAIN DR	WALNUT CANYON RD	BUCK ISLAND ROAD	/	/	/
		28' F-F	RESIDENTIAL PAVING W/ PCC CURB & GUTTER AND PCC 4' WIDE SIDEWALK ON BOTH SIDES*	BISON SPRINGS ST	FOUR MILE ROAD	SOUTH STUB TERMINUS	/	/	/
		~~28' F-F~~ 24' F-F	RESIDENTIAL PAVING W/ PCC CURB & GUTTER AND PCC 4' WIDE SIDEWALK ON EAST SIDE ONLY*	GILA CLIFF DRIVE	NORTH STUB TERMINUS	PIPESTONE ROAD	/	/	/
		25' WIDE	6' AC TRAIL	PEDESTRIAN ACCESS BETWEEN LOTS 206/207	PIPESTONE ROAD	AMOLE MESA AVENUE	/	/	/
							/	/	/

* SIDEWALKS TO BE DEFERRED PER DEFERRAL EXHIBIT 'B'.
WAIVER OF SIDEWALK ON SOUTH SIDE OF FOUR MILE ROAD STUB AND WEST SIDE OF GILA CLIFF DRIVE

STREET LIGHTS AS PER COA DPM

ORIGINAL

SIA Sequence #	COA DRC Project #	Size	Type of Improvement	Location	From	To	Private Inspector	City Inspector	City Cnst Engineer
SIERRA RANCH SUBDIVISION - UNIT I									
			ONSITE PUBLIC STORM DRAIN IMPROVEMENTS						
		18"-72" DIA	RCP W/ NEC. MH'S, LATERALS & INLETS	MESSINA DRIVE	GIBSON BLVD	AMOLE MESA AVENUE	/	/	/
		18-24" DIA	RCP W/ NEC. MH'S, LATERALS & INLETS	FOUR MILE ROAD	LOT 29	BISON SPRINGS STREET	/	/	/
		18"-24" DIA	RCP W/ NEC. MH'S, LATERALS & INLETS	CORONA RANCH RD	LOTS 76/77	SALADO CREEK STREET	/	/	/
		30" DIA	RCP W/ NEC. MH'S, LATERALS & INLETS	SALADO CREEK ST.	CORONA RANCH RD.	WALNUT CANYON ROAD	/	/	/
		18" - 36" DIA	RCP W/ NEC. MH'S, LATERALS & INLETS	WALNUT CANYON RD	LOTS 109/110	BISON SPRINGS STREET	/	/	/
		~~18~~ 24" DIA	RCP W/ NEC MH'S, LATERALS & INLETS	BUCK ISLAND ROAD	LOT 138	BISON SPRINGS STREET	/	/	/
		18" - 24" DIA	RCP W/ NEC. MH'S, LATERALS & INLETS	PIPESTONE ROAD	LOTS 188/207	BIG SPRINGS ROAD	/	/	/
		30" DIA	RCP W/ NEC MH'S, LATERALS & INLETS	BIG SPRINGS ROAD	PIPESTONE ROAD	BISON SPRINGS STREET	/	/	/
		18" - 42" DIA	RCP W/ NEC MH'S, LATERALS & INLETS	BISON SPRINGS ST	FOUR MILE ROAD	SOUTH STUB TERMINUS	/	/	/
		60" DIA	RCP W/ NEC MH'S, LATERALS & INLETS	PUBLIC EASEMENT TRACT 16-A	BISON SPRINGS ST	MESSINA DRIVE	/	/	/
		~~54~~ 48" DIA	RCP W/ NEC. MH'S, LATERALS & INLETS	WALNUT CANYON RD	BISON SPRINGS ST	MESSINA DRIVE	/	/	/
		54" DIA	RCP W/ NEC. MH'S, LATERALS & INLETS	OPEN RANGE AVE EL RANCHO GRANDE UNIT 15	MESSINA DRIVE	EXISTING STUB BLUE SKY STREET	/	/	/
			* THIS ITEM IS ON THE EL RANCHO GRANDE UNIT 15 INFRASTRUCTURE LIST DRB#1003030 AND SHOWN ON THE INFRASTRUCTURE PLANS, COA PROJECT #699388, WHICH HAS NOT GONE TO WORK ORDER						
		72" DIA	RCP W/ NEC. MH'S, LATERALS & INLETS	OPEN RANGE AVE SUN GATE SUBDIVISION	BLUE SKY STREET	BLAKE ROAD	/	/	/
			* THIS ITEM IS ON THE SUN GATE SUBDIVISION INFRASTRUCTURE LIST DRB#1003175, SHOWN ON THE INFRASTRUCTURE PLANS, COA PROJECT #736781, AND FINACIALLY GUARANTEED WITH THE SUN GATE FINAL PLAT DEFERRED ITEM.						
		72" DIA	RCP W/ NEC. MH'S, LATERALS & INLETS	BLAKE ROAD	OPEN RANGE AVE	98TH STREET	/	/	/
			* THIS ITEM IS ON THE SUN GATE ESTATES SUBDIVISION INFRASTRUCTURE LIST DRB#1003591. SHOWN ON INFRASTRUCTURE PLANS, COA PROJECT #722783.						
		72-90" DIA	RCP W/ NEC MH'S, LATERALS & INLETS	BLAKE ROAD	98TH STREET	AMOLE ARROYO	/	/	/
			* SHOWN ON INFRASTRUCTURE PLANS, COA PROJECT #722783, WHICH HAS NOT GONE TO WORK ORDER.						

ORIGINAL

SIA Sequence #	COA DRC Project #	Size	Type of Improvement	Location	From	To	Private Inspector	City Inspector	City Cnst Engineer

SIERRA RANCH SUBDIVISION - UNIT I

ONSITE PUBLIC STORM DRAIN IMPROVEMENTS (CONT'D)

		4 2 ACRE-FEET SURGE POND WITH PUBLIC EASEMENT AND COVENANT AND AGREEMENT	PARK TRACT TRACT 16-A			/	/	/
		3.5 ACRE-FEET TEMPORARY RETENTION POND WITH PUBLIC EASEMENT AND COVENANT AND AGREEMENT	TRACT 16-D EL RANCHO GRANDE			/	/	/
		2.6 ACRE-FEET TEMPORARY RETENTION POND WITH PUBLIC EASEMENT AND COVENANT AND AGREEMENT	SIERRA RANCH UNIT 2			/	/	/

NOTES:

A GRADING AND DRAINAGE CERTIFICATION OF THE APPROVED GRADING PLAN IS REQUIRED PRIOR TO THE RELEASE OF FINANCIAL GUARANTEES.

THERE WILL BE NO RELEASE OF FINANCIAL GUARANTEE OR SIA UNTIL AGREEMENT IS PROCESSED AND APPROVED WITH AMAFCA FOR CONSTRUCTION OF THE AMOLE ARROYO IMPROVEMENTS

ORIGINAL

SIA Sequence #	COA DRC Project #	Size	Type of Improvement	Location	From	To	Private Inspector	City Inspector	City Cnst Engineer
SIERRA RANCH SUBDIVISION - UNIT I									
			ONSITE PUBLIC WATERLINE IMPROVEMENTS						
		18" DIA	WATERLINE W/ NEC VALVES FH'S, MJ'S & RJ'S	CHACO CANYON DR	GIBSON BLVD	FOUR MILE ROAD	/	/	/
		4-8" DIA	WATERLINE W/ NEC VALVES FH'S, MJ'S & RJ'S	FOUR MILE ROAD	LOTS 42/43	EAST STUB TERMINUS	/	/	/
		6" DIA	WATERLINE W/ NEC VALVES FH'S, MJ'S & RJ'S	CORONA RANCH RD	LOTS 76/77	BISON SPRINGS ST	/	/	/
		6" DIA	WATERLINE W/ NEC VALVES FH'S, MJ'S & RJ'S	WALNUT CANYON RD	LOTS 109/110	BISON SPRINGS ST	/	/	/
		6" DIA	WATERLINE W/ NEC. VALVES FH'S, MJ'S & RJ'S	BUCK ISLAND ROAD	LOTS 148/149	BISON SPRINGS ST	/	/	/
		6" DIA	WATERLINE W/ NEC. VALVES FH'S, MJ'S & RJ'S	PIPESTONE ROAD	LOTS 188/207	BIG SPRINGS RD	/	/	/
		6-8" DIA	WATERLINE W/ NEC. VALVES FH'S, MJ'S & RJ'S	BIG SPRINGS ROAD	AMOLE MESA AVE	BISON SPRINGS ST	/	/	/
		4-6" DIA	WATERLINE W/ NEC. VALVES FH'S, MJ'S & RJ'S	BISON SPRINGS ST	FOUR MILE ROAD	SOUTH STUB TERMINUS	/	/	/
		4" DIA	WATERLINE W/ NEC. VALVES FH'S, MJ'S & RJ'S	GILA CLIFF DRIVE	NORTH STUB TERMINUS	PIPESTONE ROAD	/	/	/
		12" DIA	WATERLINE W/ NEC. VALVES FH'S, MJ'S & RJ'S	AMOLE MESA AVE	LOT 207	MESSINA DRIVE	/	/	/
		12" DIA	WATERLINE W/ NEC. VALVES FH'S, MJ'S & RJ'S	AMOLE MESA AVE	MESSINA DRIVE	MESA ARENOSA	/	/	/
		NOTE:	WATER METER FOR LANDSCAPING IN THE PUBLIC RIGHT-OF-WAY						

ORIGINAL

SIA Sequence #	COA DRC Project #	Size	Type of Improvement	Location	From	To	Private Inspector	City Inspector	City Cnst Engineer
SIERRA RANCH SUBDIVISION - UNIT I									
			ONSITE PUBLIC SANITARY SEWER IMPROVEMENTS						
		8" DIA	SANITARY SEWER W/ NEC MH'S & SERVICES	FOUR MILE ROAD	LOTS 42/43	EAST STUB TERMINUS	/	/	/
		8" DIA	SANITARY SEWER W/ NEC MH'S & SERVICES	CORONA RANCH RD	LOTS 76/77	BISON SPRINGS ST	/	/	/
		8" DIA	SANITARY SEWER W/ NEC. MH'S & SERVICES	WALNUT CANYON RD	LOTS 109/110	BISON SPRINGS ST	/	/	/
		8" DIA	SANITARY SEWER W/ NEC. MH'S & SERVICES	BUCK ISLAND ROAD	LOTS 148/149	BISON SPRINGS ST	/	/	/
		8" DIA	SANITARY SEWER W/ NEC. MH'S & SERVICES	PIPESTONE ROAD	LOTS 188/207	BIG SPRINGS RD	/	/	/
		8" DIA	SANITARY SEWER W/ NEC. MH'S & SERVICES	BIG SPRINGS ROAD	PIPESTONE ROAD	BISON SPRINGS ST	/	/	/
		8" DIA	SANITARY SEWER W/ NEC. MH'S & SERVICES	GILA CLIFF DRIVE	NORTH STUB TERMINUS	PIPESTONE ROAD	/	/	/
		8" DIA	SANITARY SEWER W/ NEC MH'S & SERVICES	BISON SPRINGS ST	FOUR MILE ROAD	SOUTH STUB TERMINUS	/	/	/
		10" DIA	SANITARY SEWER W/ NEC. MH'S & SERVICES	PUBLIC EASEMENT	BISON SPRINGS ST	MESSINA DRIVE	/	/	/
		10" DIA	SANITARY SEWER W/ NEC. MH'S & SERVICES	MESSINA DRIVE	PUBLIC EASEMENT	AMOLE MESA AVENUE	/	/	/
		10" DIA	SANITARY SEWER W/ NEC. MH'S & SERVICES	AMOLE MESA AVE.	MESSINA DRIVE	PUBLIC EASEMENT IN EL RANCHO GRANDE UNIT 15	/	/	/
		8-10" DIA	SANITARY SEWER W/ NEC. MH'S & SERVICES	PUBLIC EASEMENT IN EL RANCHO GRANDE UNIT 15	AMOLE MESA AVENUE	FUTURE OPEN RANGE AVE. EXISTING STUB	/	/	/

SIA - Sequence #	COA DRC Project #	Size	Type of Improvement	Location	From ORIGINAL To		Private Inspector	City Inspector	City Cnst Engineer
SIERRA RANCH SUBDIVISION - UNIT 2			NOTE: ALL UNIT 1 PUBLIC IMPROVEMENTS REQUIRED FOR UNIT 2						
			ONSITE PUBLIC ROADWAY IMPROVEMENTS						
		30' ~~EOA-F~~ F-F	ARTERIAL PAVING W/ PCC CURB & GUTTER, MEDIAN CURB AND PCC 6' WIDE SIDEWALK ON SOUTH SIDE ONLY	GIBSON BOULEVARD	LOT 247	CHACO CANYON DR	/	/	/
		24' EOA-F	RESIDENTIAL PAVING W/ PCC CURB & GUTTER AND PCC 6' WIDE SIDEWALK ON NORTH SIDE ONLY	AMOLE MESA AVE	LOT 229	LOT 208	/	/	/
		28' F-F	RESIDENTIAL PAVING W/ PCC CURB & GUTTER AND PCC 4' WIDE SIDEWALK ON BOTH SIDES*	FOUR MILE ROAD	PIPESPRING STREET	LOTS 261/262	/	/	/
		28' F-F	RESIDENTIAL PAVING W/ PCC CURB & GUTTER AND PCC 4' WIDE SIDEWALK ON BOTH SIDES*	CORONA RANCH RD	PIPESPRING STREET	LOTS 291/292	/	/	/
		28' F-F	RESIDENTIAL PAVING W/ PCC CURB & GUTTER AND PCC 4' WIDE SIDEWALK ON BOTH SIDES*	WALNUT CANYON RD	PIPESPRING STREET	LOTS 328/329	/	/	/
		24' F-F	RESIDENTIAL PAVING W/ PCC CURB & GUTTER AND PCC 4' WIDE SIDEWALK ON NORTH SIDE ONLY*	BUCK ISLAND ROAD	WEST STUB TERMINUS	ALAMO CANYON DRIVE	/	/	/
		28' F-F	RESIDENTIAL PAVING W/ PCC CURB & GUTTER AND PCC 4' WIDE SIDEWALK ON BOTH SIDES*	BUCK ISLAND ROAD	ALAMO CANYON DR	LOTS 352/353	/	/	/
		28' F-F	RESIDENTIAL PAVING W/ PCC CURB & GUTTER AND PCC 4' WIDE SIDEWALK ON BOTH SIDES*	PIPESTONE ROAD	PIPESPRING STREET	LOTS 208/356	/	/	/
		28' F-F	RESIDENTIAL PAVING W/ PCC CURB & GUTTER AND PCC 4' WIDE SIDEWALK ON BOTH SIDES*	PIPESPRING STREET	FOUR MILE ROAD	PIPESTONE ROAD	/	/	/
		28' F-F	RESIDENTIAL PAVING W/ PCC CURB & GUTTER AND PCC 4' WIDE SIDEWALK ON BOTH SIDES*	DEVILS TOWER ST	WALNUT CANYON RD	PIPESTONE ROAD	/	/	/
		48' F-F	RESIDENTIAL PAVING W/ PCC CURB & GUTTER AND PCC 6' WIDE SIDEWALK ON BOTH SIDES*	ALAMO CANYON DR	PIPESTONE ROAD	AMOLE MESA AVENUE	/	/	/
		28' F-F	RESIDENTIAL PAVING W/ PCC CURB & GUTTER AND PCC 4' WIDE SIDEWALK ON BOTH SIDES*	ALAMO CANYON DR	BUCK ISLAND ROAD	PIPESTONE ROAD	/	/	/
		28' F-F	RESIDENTIAL PAVING W/ PCC CURB & GUTTER AND PCC 4' WIDE SIDEWALK ON BOTH SIDES*	FOSTER RANCH ST	FOUR MILE ROAD	WALNUT CANYON ROAD	/	/	/
		28' F-F	RESIDENTIAL PAVING W/ PCC CURB & GUTTER AND PCC 4' WIDE SIDEWALK ON BOTH SIDES*	MOUNTAINTOP DR	BUCK ISLAND ROAD	PIPESTONE ROAD	/	/	/
							/	/	/

* SIDEWALKS TO BE DEFERRED PER DEFERRAL EXHIBIT 'B'.
WAIVER OF SIDEWALK ON SOUTH SIDE OF BUCK ISLAND ROAD STUB

STREET LIGHTS AS PER COA DPM

ORIGINAL

SIA Sequence #	COA DRC Project #	Size	Type of Improvement	Location	From	To	Private Inspector	City Inspector	City Cnst Engineer
SIERRA RANCH SUBDIVISION - UNIT 2									
			ONSITE PUBLIC STORM DRAIN IMPROVEMENTS						
		24" DIA	RCP W/ NEC. MH'S, LATERALS & INLETS	PUBLIC EASEMENT LOT 244	WEST BOUNDARY	PIPESPRING STREET	/	/	/
		24" DIA	RCP W/ NEC. MH'S, LATERALS & INLETS	PIPESPRING STREET	PUBLIC EASEMENT	CORONA RANCH ROAD	/	/	/
		24" DIA	RCP W/ NEC. MH'S, LATERALS & INLETS	CORONA RANCH RD	PIPESPRING STREET	LOTS 291/292	/	/	/
			OFFSITE DRAINAGE OPTION #1 INTERIM SOUTH POWERLINE RIPRAP CHANNEL W/DROP STRUCTURES & NECESSARY SEDIMENTATION CONTROL STRUCTURES	200' PNM EASEMENT	GIBSON BLVD	POND #2 - ANDERSON HTS APPROVED GRADING PLAN	/	/	/
			OFFSITE DRAINAGE OPTION #2 1.6 ACRE-FEET TEMPORARY RETENTION POND WITH PUBLIC EASEMENT AND COVENANT AND AGREEMENT	150' AMAFCA DRAINAGE EASEMENT			/	/	/
			1.0 ACRE-FEET TEMPORARY RETENTION POND WITH PUBLIC EASEMENT AND COVENANT AND AGREEMENT	150' AMAFCA DRAINAGE EASEMENT			/	/	/

NOTES: A GRADING AND DRAINAGE CERTIFICATION OF THE APPROVED GRADING PLAN IS REQUIRED PRIOR TO THE RELEASE OF FINANCIAL GUARANTEES.

THERE WILL BE NO RELEASE OF FINANCIAL GUARANTEE OR SIA UNTIL AGREEMENT IS PROCESSED AND APPROVED WITH AMAFCA FOR CONSTRUCTION OF THE AMOLE ARROYO IMPROVEMENTS.

ORIGINAL

SIA Sequence #	COA DRC Project #	Size	Type of Improvement	Location	From	To	Private Inspector	City Inspector	City Cnst Engineer
SIERRA RANCH SUBDIVISION - UNIT 2									
			ONSITE PUBLIC WATERLINE IMPROVEMENTS						
		8" DIA	WATERLINE W/ NEC. VALVES FH'S, MJ'S & RJ'S	FOUR MILE ROAD	PIPESPRING STREET	LOTS 261/262	/	/	/
		6" DIA	WATERLINE W/ NEC. VALVES FH'S, MJ'S & RJ'S	CORONA RANCH RD	PIPESPRING STREET	LOTS 291/292	/	/	/
		6" DIA	WATERLINE W/ NEC. VALVES FH'S, MJ'S & RJ'S	WALNUT CANYON RD	PIPESPRING STREET	LOTS 328/329	/	/	/
		4-6" DIA	WATERLINE W/ NEC. VALVES FH'S, MJ'S & RJ'S	BUCK ISLAND ROAD	WEST STUB TERMINUS	LOTS 352/353	/	/	/
		6-8" DIA	WATERLINE W/ NEC. VALVES FH'S, MJ'S & RJ'S	PIPESTONE ROAD	PIPESPRING STREET	LOTS 208/356	/	/	/
		8" DIA	WATERLINE W/ NEC. VALVES FH'S, MJ'S & RJ'S	PIPESPRING STREET	FOUR MILE ROAD	PIPESTONE ROAD	/	/	/
		6" DIA	WATERLINE W/ NEC VALVES FH'S, MJ'S & RJ'S	DEVILS TOWER ST	WALNUT CANYON RD	PIPESTONE ROAD	/	/	/
		6" DIA	WATERLINE W/ NEC. VALVES FH'S, MJ'S & RJ'S	MOUNTAINTOP DR	BUCK ISLAND ROAD	PIPESTONE ROAD	/	/	/
		20" DIA	WATERLINE W/ NEC. VALVES FH'S, MJ'S & RJ'S	PUBLIC EASEMENT IN EL RANCHO GRANDE UNIT 16	DELGADO	GIBSON BLVD. AT CHACO CANYON DRIVE	/	/	/
		18" DIA	WATERLINE W/ NEC. VALVES FH'S, MJ'S & RJ'S	~~FOUR MILE ROAD~~ GIBSON BLVD	~~FOSTER RANCH ST.~~ CHACO CANYON DR	~~LOTS 201/202~~ 118TH ST	/	/	/
		18" DIA	WATERLINE W/ NEC VALVES FH'S, MJ'S & RJ'S	~~FOSTER RANCH ST~~ 118TH ST	~~FOUR MILE ROAD~~ AMOLE MESA AVE	~~WALNUT CANYON ROAD~~ GIBSON BLVD	/	/	/
		~~18" DIA~~	~~WATERLINE W/ NEC. VALVES FH'S, MJ'S & RJ'S~~	~~WALNUT CANYON RD.~~	~~DEVILS TOWER ST.~~	~~FOSTER RANCH ST.~~	/	/	/
		~~18" DIA~~	~~WATERLINE W/ NEC. VALVES FH'S, MJ'S & RJ'S~~	~~DEVILS TOWER ST.~~	~~WALNUT CANYON RD~~	~~PIPESTONE ROAD~~	/	/	/
		~~18" DIA~~	~~WATERLINE W/ NEC. VALVES FH'S, MJ'S & RJ'S~~	~~PIPESTONE ROAD~~	~~DEVILS TOWER ST.~~	~~ALAMO CANYON DRIVE~~	/	/	/
		~~18" DIA~~	~~WATERLINE W/ NEC. VALVES FH'S, MJ'S & RJ'S~~	~~ALAMO CANYON DR.~~	~~PIPESTONE ROAD~~	~~AMOLE MESA AVENUE~~	/	/	/
		12~~"~~ DIA	WATERLINE W/ NEC VALVES FH'S, MJ'S & RJ'S	AMOLE MESA AVE	LOTS 229	LOT 208	/	/	/
		NOTE	WATER METER FOR LANDSCAPING IN THE PUBLIC RIGHT-OF-WAY						

ORIGINAL

SIA Sequence #	COA DRC Project #	Size	Type of Improvement	Location	From	To	Private Inspector	City Inspector	City Cnst Engineer
			ONSITE PUBLIC SANITARY SEWER IMPROVEMENTS						
		8" DIA	SANITARY SEWER W/ NEC. MH'S & SERVICES	FOUR MILE ROAD	PIPESPRING STREET	LOTS 261/262	/	/	/
		8" DIA	SANITARY SEWER W/ NEC. MH'S & SERVICES	CORONA RANCH RD	PIPESPRING STREET	LOTS 291/292	/	/	/
		8" DIA	SANITARY SEWER W/ NEC. MH'S & SERVICES	WALNUT CANYON RD	PIPESPRING STREET	LOTS 328/329	/	/	/
		8" DIA	SANITARY SEWER W/ NEC MH'S & SERVICES	BUCK ISLAND ROAD	WEST STUB TERMINUS	LOTS 352/353	/	/	/
		8" DIA	SANITARY SEWER W/ NEC. MH'S & SERVICES	PIPESTONE ROAD	PIPESPRING STREET	LOTS 208/356	/	/	/
		8" DIA	SANITARY SEWER W/ NEC. MH'S & SERVICES	PIPESPRING STREET	FOUR MILE ROAD	PIPESTONE ROAD	/	/	/
		8" DIA	SANITARY SEWER W/ NEC. MH'S & SERVICES	DEVILS TOWER ST	WALNUT CANYON RD	PIPESTONE ROAD	/	/	/
		8" DIA	SANITARY SEWER W/ NEC. MH'S & SERVICES	MOUNTAINTOP DR	BUCK ISLAND ROAD	PIPESTONE ROAD	/	/	/
		8" DIA	SANITARY SEWER W/ NEC. MH'S & SERVICES	PUBLIC EASEMENT LOT 224	WEST BOUNDARY	PIPESPRING STREET	/	/	/

NOTES:
1 LANDSCAPE MAINTENANCE AGREEMENT FOR LANDSCAPING IN THE PUBLIC RIGHT-OF-WAY
2 PERIMETER WALLS PER DRB APPROVED PERIMETER WALL DESIGN
3 WALL AND LANDSCAPING CERTIFICATION FROM REGISTERED ENGINEER AND/OR REGISTERED LANDSCAPE ARCHITECT REQUIRED PRIOR TO RELEASE OF FINANCIAL GUARANTEES.

SCOTT STEFFEN	01/25/05		1/26/05	Christina Sandoval	1/26/05
PREPARED BY PRINT NAME	DATE	DRB CHAIR	DATE	PARKS & RECREATION DEPARTMENT	DATE
BOHANNAN HUSTON INC			1-26-05	Lynn M. Mann	1-26-05
FIRM		TRANSPORTATION DEVELOPMENT	DATE	AMAFCA	DATE
	1/25/05		1/26/05	Bradley L. Bingham	
SIGNATURE	DATE	UTILITY DEVELOPMENT	DATE	CITY ENGINEER	DATE
MAXIMUM TIME ALLOW TO CONSTRUCT IMPROVEMENTS WITHOUT A DRB EXTENSION		N/A			
		NEW MEXICO UTILITIES INC.	DATE		DATE

DESIGN REVIEW COMMITTEE REVISIONS

REVISION	DATE	DRC CHAIR	USER DEPARTMENT	AGENT/OWNER
1	3/31/05			
2	5/05/05			

Current DRC
Project No. _____

ORIGINAL

Claire

Date Submitted: January 25, 2005

Date Site Plan Approved: _____

Date Preliminary Plat Approved: 1/26/05

Date Preliminary Plat Expires: 1/26/06

Figure 12

INFRASTRUCTURE LIST

EXHIBIT "A"
TO SUBDIVISION IMPROVEMENTS AGREEMENT
DEVELOPMENT REVIEW BOARD (D R.B.) REQUIRED INFRASTRUCTURE LIST

DRB Project No. 1003429

SIERRA RANCH SUBDIVISION
PRELIMINARY PLAT

APPLICATION NO. **04DRB-01950**

Following is a summary of PUBLIC/PRIVATE Infrastructure required to be constructed or financially guaranteed for the above development This Listing is not necessarily a complete listing. During the SIA process and/or in the review of the construction drawings, if the DRC Chair determines that appurtenant items and/or unforeseen items have not been included in the infrastructure listing, the DRC Chair may include those items in the listing and related financial guarantee Likewise, if the DRC Chair determines that appurtenant or non-essential items can be deleted from the listing, those items may be deleted as well as the related portions of the financial guarantees. All such revisions require approval by the DRC Chair, the User Department and agent/owner. If such approvals are obtained, these revisions to the listing will be incorporated administratively. In addition, any unforeseen items which arise during construction which are necessary to complete the project and which normally are the Subdivider's responsibility will be required as a condition of project acceptance and close out by the City.

SIA Sequence #	COA DRC Project #	Size	Type of Improvement	Location	From	To	Private Inspector	City Inspector	City Cnst Engineer
SIERRA RANCH SUBDIVISION - UNIT I									
			ONSITE PUBLIC ROADWAY IMPROVEMENTS						
		30' ~~EOA-F~~ F-F	ARTERIAL PAVING W/ PCC CURB & GUTTER, MEDIAN CURB AND PCC 6' WIDE SIDEWALK ON SOUTH SIDE ONLY	GIBSON BOULEVARD	CHACO CANYON DR	MESSINA DRIVE	/	/	/
		24' EOA-F	RESIDENTIAL PAVING W/ PCC CURB & GUTTER AND PCC 6' WIDE SIDEWALK ON WEST SIDE ONLY	MESSINA DRIVE	GIBSON BOULEVARD	AMOLE MESA AVENUE	/	/	/
		24' EOA-F	RESIDENTIAL PAVING W/ PCC CURB & GUTTER AND PCC 6' WIDE SIDEWALK ON NORTH SIDE ONLY	AMOLE MESA AVE	LOT 207	MESSINA DRIVE	/	/	/
		28' F-F	RESIDENTIAL PAVING W/ PCC CURB & GUTTER AND PCC 4' WIDE SIDEWALK ON BOTH SIDES*	FOUR MILE ROAD	LOTS 42/43	BISON SPRINGS STREET	/	/	/
		24' F-F	RESIDENTIAL PAVING W/ PCC CURB & GUTTER AND PCC 4' WIDE SIDEWALK ON NORTH SIDE ONLY*	FOUR MILE ROAD	BISON SPRINGS STREET	EAST STUB TERMINUS	/	/	/
		28' F-F	RESIDENTIAL PAVING W/ PCC CURB & GUTTER AND PCC 4' WIDE SIDEWALK ON BOTH SIDES*	CORONA RANCH RD	LOTS 76/77	BISON SPRINGS STREET	/	/	/
		28' F-F	RESIDENTIAL PAVING W/ PCC CURB & GUTTER AND PCC 4' WIDE SIDEWALK ON BOTH SIDES*	WALNUT CANYON RD	LOTS 109/110	BISON SPRINGS STREET	/	/	/
		48' F-F	RESIDENTIAL PAVING W/ PCC CURB & GUTTER AND PCC 6' WIDE SIDEWALK ON BOTH SIDES*	WALNUT CANYON RD	BISON SPRINGS STREET	MESSINA DRIVE	/	/	/
		28' F-F	RESIDENTIAL PAVING W/ PCC CURB & GUTTER AND PCC 4' WIDE SIDEWALK ON BOTH SIDES*	BUCK ISLAND ROAD	LOTS 148/149	BISON SPRINGS STREET	/	/	/

ORIGINAL

SIA Sequence #	COA DRC Project #	Size	Type of Improvement	Location	From	To	Private Inspector	City Inspector	City Cnst Engineer
			ONSITE PUBLIC ROADWAY IMPROVEMENTS (CONT.)						
		28' F-F	RESIDENTIAL PAVING W/ PCC CURB & GUTTER AND PCC 4' WIDE SIDEWALK ON BOTH SIDES*	PIPESTONE ROAD	LOTS 188/207	BIG SPRINGS ROAD	/	/	/
		36' F-F	RESIDENTIAL PAVING W/ PCC CURB & GUTTER AND PCC 4' WIDE SIDEWALK ON BOTH SIDES*	BIG SPRINGS ROAD	AMOLE MESA AVE	BISON SPRINGS STREET	/	/	/
		48' F-F	RESIDENTIAL PAVING W/ PCC CURB & GUTTER AND PCC 6' WIDE SIDEWALK ON BOTH SIDES*	CHACO CANYON DR	GIBSON BOULEVARD	FOUR MILE ROAD	/	/	/
		28' F-F	RESIDENTIAL PAVING W/ PCC CURB & GUTTER AND PCC 4' WIDE SIDEWALK ON BOTH SIDES*	SALADO CREEK ST	FOUR MILE ROAD	WALNUT CANYON ROAD	/	/	/
		28' F-F	RESIDENTIAL PAVING W/ PCC CURB & GUTTER AND PCC 4' WIDE SIDEWALK ON BOTH SIDES*	CARIZZO PLAIN DR	WALNUT CANYON RD	BUCK ISLAND ROAD	/	/	/
		28' F-F	RESIDENTIAL PAVING W/ PCC CURB & GUTTER AND PCC 4' WIDE SIDEWALK ON BOTH SIDES*	BISON SPRINGS ST	FOUR MILE ROAD	SOUTH STUB TERMINUS	/	/	/
		~~28' F-F~~ 24' F-F	RESIDENTIAL PAVING W/ PCC CURB & GUTTER AND PCC 4' WIDE SIDEWALK ON EAST SIDE ONLY*	GILA CLIFF DRIVE	NORTH STUB TERMINUS	PIPESTONE ROAD	/	/	/
		25' WIDE	6' AC TRAIL	PEDESTRIAN ACCESS BETWEEN LOTS 206/207	PIPESTONE ROAD	AMOLE MESA AVENUE	/	/	/
							/	/	/

* SIDEWALKS TO BE DEFERRED PER DEFERRAL EXHIBIT 'B'
WAIVER OF SIDEWALK ON SOUTH SIDE OF FOUR MILE ROAD STUB AND WEST SIDE OF GILA CLIFF DRIVE

STREET LIGHTS AS PER COA DPM

ORIGINAL

SIA Sequence #	COA DRC Project #	Size	Type of Improvement	Location	From	To	Private Inspector	City Inspector	City Cnst Engineer
SIERRA RANCH SUBDIVISION - UNIT I									
			ONSITE PUBLIC STORM DRAIN IMPROVEMENTS						
		18"-72" DIA	RCP W/ NEC. MH'S, LATERALS & INLETS	MESSINA DRIVE	GIBSON BLVD	AMOLE MESA AVENUE	/	/	/
		18-24" DIA	RCP W/ NEC. MH'S, LATERALS & INLETS	FOUR MILE ROAD	LOT 29	BISON SPRINGS STREET	/	/	/
		18"-24" DIA	RCP W/ NEC. MH'S, LATERALS & INLETS	CORONA RANCH RD	LOTS 76/77	SALADO CREEK STREET	/	/	/
		30" DIA	RCP W/ NEC. MH'S, LATERALS & INLETS	SALADO CREEK ST.	CORONA RANCH RD.	WALNUT CANYON ROAD	/	/	/
		18" - 36" DIA	RCP W/ NEC. MH'S, LATERALS & INLETS	WALNUT CANYON RD	LOTS 109/110	BISON SPRINGS STREET	/	/	/
		~~18~~ 24" DIA	RCP W/ NEC. MH'S, LATERALS & INLETS	BUCK ISLAND ROAD	LOT 138	BISON SPRINGS STREET	/	/	/
		18" - 24" DIA	RCP W/ NEC. MH'S, LATERALS & INLETS	PIPESTONE ROAD	LOTS 188/207	BIG SPRINGS ROAD	/	/	/
		30" DIA	RCP W/ NEC. MH'S, LATERALS & INLETS	BIG SPRINGS ROAD	PIPESTONE ROAD	BISON SPRINGS STREET	/	/	/
		18" - 42" DIA	RCP W/ NEC. MH'S, LATERALS & INLETS	BISON SPRINGS ST	FOUR MILE ROAD	SOUTH STUB TERMINUS	/	/	/
		60" DIA	RCP W/ NEC MH'S, LATERALS & INLETS	PUBLIC EASEMENT TRACT 16-A	BISON SPRINGS ST	MESSINA DRIVE	/	/	/
		~~42~~ 48" DIA	RCP W/ NEC. MH'S, LATERALS & INLETS	WALNUT CANYON RD	BISON SPRINGS ST	MESSINA DRIVE	/	/	/
		54" DIA	RCP W/ NEC. MH'S, LATERALS & INLETS	OPEN RANGE AVE EL RANCHO GRANDE UNIT 15	MESSINA DRIVE	EXISTING STUB BLUE SKY STREET	/	/	/
			* THIS ITEM IS ON THE EL RANCHO GRANDE UNIT 15 INFRASTRUCTURE LIST DRB#1003030 AND SHOWN ON THE INFRASTRUCTURE PLANS, COA PROJECT #699388, WHICH HAS NOT GONE TO WORK ORDER						
		72" DIA	RCP W/ NEC. MH'S, LATERALS & INLETS	OPEN RANGE AVE SUN GATE SUBDIVISION	BLUE SKY STREET	BLAKE ROAD	/	/	/
			* THIS ITEM IS ON THE SUN GATE SUBDIVISION INFRASTRUCTURE LIST DRB#1003175, SHOWN ON THE INFRASTRUCTURE PLANS, COA PROJECT #736781, AND FINACIALLY GUARANTEED WITH THE SUN GATE FINAL PLAT. DEFERRED ITEM.						
		72" DIA	RCP W/ NEC. MH'S, LATERALS & INLETS	BLAKE ROAD	OPEN RANGE AVE	98TH STREET	/	/	/
			* THIS ITEM IS ON THE SUN GATE ESTATES SUBDIVISION INFRASTRUCTURE LIST DRB#1003591. SHOWN ON INFRASTRUCTURE PLANS, COA PROJECT #722783.						
		72-90" DIA	RCP W/ NEC. MH'S, LATERALS & INLETS	BLAKE ROAD	98TH STREET	AMOLE ARROYO	/	/	/
			* SHOWN ON INFRASTRUCTURE PLANS, COA PROJECT #722783, WHICH HAS NOT GONE TO WORK ORDER.						

ORIGINAL

SIA Sequence #	COA DRC Project #	Size	Type of Improvement	Location	From	To	Private Inspector	City Inspector	City Cnst Engineer

SIERRA RANCH SUBDIVISION - UNIT I

ONSITE PUBLIC STORM DRAIN IMPROVEMENTS (CONT'D)

			4.2 ACRE-FEET SURGE POND WITH PUBLIC EASEMENT AND COVENANT AND AGREEMENT	PARK TRACT TRACT 16-A			/	/	/
			3.5 ACRE-FEET TEMPORARY RETENTION POND WITH PUBLIC EASEMENT AND COVENANT AND AGREEMENT	TRACT 16-D EL RANCHO GRANDE			/	/	/
			2.6 ACRE-FEET TEMPORARY RETENTION POND WITH PUBLIC EASEMENT AND COVENANT AND AGREEMENT	SIERRA RANCH UNIT 2			/	/	/

NOTES: A GRADING AND DRAINAGE CERTIFICATION OF THE APPROVED GRADING PLAN IS REQUIRED PRIOR TO THE RELEASE OF FINANCIAL GUARANTEES.

THERE WILL BE NO RELEASE OF FINANCIAL GUARANTEE OR SIA UNTIL AGREEMENT IS PROCESSED AND APPROVED WITH AMAFCA FOR CONSTRUCTION OF THE AMOLE ARROYO IMPROVEMENTS

ORIGINAL

SIA Sequence #	COA DRC Project #	Size	Type of Improvement	Location	From	To	Private Inspector	City Inspector	City Cnst Engineer
SIERRA RANCH SUBDIVISION - UNIT I									
			ONSITE PUBLIC WATERLINE IMPROVEMENTS						
		18" DIA	WATERLINE W/ NEC. VALVES FH'S, MJ'S & RJ'S	CHACO CANYON DR	GIBSON BLVD	FOUR MILE ROAD	/	/	/
		4-8" DIA	WATERLINE W/ NEC. VALVES FH'S, MJ'S & RJ'S	FOUR MILE ROAD	LOTS 42/43	EAST STUB TERMINUS	/	/	/
		6" DIA	WATERLINE W/ NEC VALVES FH'S, MJ'S & RJ'S	CORONA RANCH RD	LOTS 76/77	BISON SPRINGS ST	/	/	/
		6" DIA	WATERLINE W/ NEC. VALVES FH'S, MJ'S & RJ'S	WALNUT CANYON RD	LOTS 109/110	BISON SPRINGS ST	/	/	/
		6" DIA	WATERLINE W/ NEC. VALVES FH'S, MJ'S & RJ'S	BUCK ISLAND ROAD	LOTS 148/149	BISON SPRINGS ST	/	/	/
		6" DIA	WATERLINE W/ NEC VALVES FH'S, MJ'S & RJ'S	PIPESTONE ROAD	LOTS 188/207	BIG SPRINGS RD	/	/	/
		6-8" DIA	WATERLINE W/ NEC. VALVES FH'S, MJ'S & RJ'S	BIG SPRINGS ROAD	AMOLE MESA AVE	BISON SPRINGS ST	/	/	/
		4-6" DIA	WATERLINE W/ NEC. VALVES FH'S, MJ'S & RJ'S	BISON SPRINGS ST	FOUR MILE ROAD	SOUTH STUB TERMINUS	/	/	/
		4" DIA	WATERLINE W/ NEC. VALVES FH'S, MJ'S & RJ'S	GILA CLIFF DRIVE	NORTH STUB TERMINUS	PIPESTONE ROAD	/	/	/
		12" DIA	WATERLINE W/ NEC. VALVES FH'S, MJ'S & RJ'S	AMOLE MESA AVE	LOT 207	MESSINA DRIVE	/	/	/
		12" DIA	WATERLINE W/ NEC. VALVES FH'S, MJ'S & RJ'S	AMOLE MESA AVE	MESSINA DRIVE	MESA ARENOSA	/	/	/
		NOTE:	WATER METER FOR LANDSCAPING IN THE PUBLIC RIGHT-OF-WAY						

ORIGINAL

SIA Sequence #	COA DRC Project #	Size	Type of Improvement	Location	From	To	Private Inspector	City Inspector	City Cnst Engineer
SIERRA RANCH SUBDIVISION - UNIT I									
			ONSITE PUBLIC SANITARY SEWER IMPROVEMENTS						
		8" DIA	SANITARY SEWER W/ NEC. MH'S & SERVICES	FOUR MILE ROAD	LOTS 42/43	EAST STUB TERMINUS	/	/	/
		8" DIA	SANITARY SEWER W/ NEC. MH'S & SERVICES	CORONA RANCH RD	LOTS 76/77	BISON SPRINGS ST	/	/	/
		8" DIA	SANITARY SEWER W/ NEC. MH'S & SERVICES	WALNUT CANYON RD	LOTS 109/110	BISON SPRINGS ST	/	/	/
		8" DIA	SANITARY SEWER W/ NEC. MH'S & SERVICES	BUCK ISLAND ROAD	LOTS 148/149	BISON SPRINGS ST	/	/	/
		8" DIA	SANITARY SEWER W/ NEC. MH'S & SERVICES	PIPESTONE ROAD	LOTS 188/207	BIG SPRINGS RD	/	/	/
		8" DIA	SANITARY SEWER W/ NEC. MH'S & SERVICES	BIG SPRINGS ROAD	PIPESTONE ROAD	BISON SPRINGS ST	/	/	/
		8" DIA	SANITARY SEWER W/ NEC. MH'S & SERVICES	GILA CLIFF DRIVE	NORTH STUB TERMINUS	PIPESTONE ROAD	/	/	/
		8" DIA	SANITARY SEWER W/ NEC. MH'S & SERVICES	BISON SPRINGS ST	FOUR MILE ROAD	SOUTH STUB TERMINUS	/	/	/
		10" DIA	SANITARY SEWER W/ NEC. MH'S & SERVICES	PUBLIC EASEMENT	BISON SPRINGS ST	MESSINA DRIVE	/	/	/
		10" DIA	SANITARY SEWER W/ NEC. MH'S & SERVICES	MESSINA DRIVE	PUBLIC EASEMENT	AMOLE MESA AVENUE	/	/	/
		10" DIA	SANITARY SEWER W/ NEC. MH'S & SERVICES	AMOLE MESA AVE.	MESSINA DRIVE	PUBLIC EASEMENT IN EL RANCHO GRANDE UNIT 15	/	/	/
		8-10" DIA	SANITARY SEWER W/ NEC MH'S & SERVICES	PUBLIC EASEMENT IN EL RANCHO GRANDE UNIT 15	AMOLE MESA AVENUE	FUTURE OPEN RANGE AVE. EXISTING STUB	/	/	/

ORIGINAL

SIA Sequence #	COA DRC Project #	Size	Type of Improvement	Location	From	To	Private Inspector	City Inspector	City Cnst Engineer
SIERRA RANCH SUBDIVISION - UNIT 2			NOTE: ALL UNIT 1 PUBLIC IMPROVEMENTS REQUIRED FOR UNIT 2						
			ONSITE PUBLIC ROADWAY IMPROVEMENTS						
		30' ~~EOA-F~~ F-F	ARTERIAL PAVING W/ PCC CURB & GUTTER, MEDIAN CURB AND PCC 6' WIDE SIDEWALK ON SOUTH SIDE ONLY	GIBSON BOULEVARD	LOT 247	CHACO CANYON DR	/	/	/
		24' EOA-F	RESIDENTIAL PAVING W/ PCC CURB & GUTTER AND PCC 6' WIDE SIDEWALK ON NORTH SIDE ONLY	AMOLE MESA AVE	LOT 229	LOT 208	/	/	/
		28' F-F	RESIDENTIAL PAVING W/ PCC CURB & GUTTER AND PCC 4' WIDE SIDEWALK ON BOTH SIDES*	FOUR MILE ROAD	PIPESPRING STREET	LOTS 261/262	/	/	/
		28' F-F	RESIDENTIAL PAVING W/ PCC CURB & GUTTER AND PCC 4' WIDE SIDEWALK ON BOTH SIDES*	CORONA RANCH RD	PIPESPRING STREET	LOTS 291/292	/	/	/
		28' F-F	RESIDENTIAL PAVING W/ PCC CURB & GUTTER AND PCC 4' WIDE SIDEWALK ON BOTH SIDES*	WALNUT CANYON RD	PIPESPRING STREET	LOTS 328/329	/	/	/
		24' F-F	RESIDENTIAL PAVING W/ PCC CURB & GUTTER AND PCC 4' WIDE SIDEWALK ON NORTH SIDE ONLY*	BUCK ISLAND ROAD	WEST STUB TERMINUS	ALAMO CANYON DRIVE	/	/	/
		28' F-F	RESIDENTIAL PAVING W/ PCC CURB & GUTTER AND PCC 4' WIDE SIDEWALK ON BOTH SIDES*	BUCK ISLAND ROAD	ALAMO CANYON DR	LOTS 352/353	/	/	/
		28' F-F	RESIDENTIAL PAVING W/ PCC CURB & GUTTER AND PCC 4' WIDE SIDEWALK ON BOTH SIDES*	PIPESTONE ROAD	PIPESPRING STREET	LOTS 208/356	/	/	/
		28' F-F	RESIDENTIAL PAVING W/ PCC CURB & GUTTER AND PCC 4' WIDE SIDEWALK ON BOTH SIDES*	PIPESPRING STREET	FOUR MILE ROAD	PIPESTONE ROAD	/	/	/
		28' F-F	RESIDENTIAL PAVING W/ PCC CURB & GUTTER AND PCC 4' WIDE SIDEWALK ON BOTH SIDES*	DEVILS TOWER ST	WALNUT CANYON RD	PIPESTONE ROAD	/	/	/
		48' F-F	RESIDENTIAL PAVING W/ PCC CURB & GUTTER AND PCC 6' WIDE SIDEWALK ON BOTH SIDES*	ALAMO CANYON DR	PIPESTONE ROAD	AMOLE MESA AVENUE	/	/	/
		28' F-F	RESIDENTIAL PAVING W/ PCC CURB & GUTTER AND PCC 4' WIDE SIDEWALK ON BOTH SIDES*	ALAMO CANYON DR	BUCK ISLAND ROAD	PIPESTONE ROAD	/	/	/
		28' F-F	RESIDENTIAL PAVING W/ PCC CURB & GUTTER AND PCC 4' WIDE SIDEWALK ON BOTH SIDES*	FOSTER RANCH ST	FOUR MILE ROAD	WALNUT CANYON ROAD	/	/	/
		28' F-F	RESIDENTIAL PAVING W/ PCC CURB & GUTTER AND PCC 4' WIDE SIDEWALK ON BOTH SIDES*	MOUNTAINTOP DR	BUCK ISLAND ROAD	PIPESTONE ROAD	/	/	/
			* SIDEWALKS TO BE DEFERRED PER DEFERRAL EXHIBIT 'B' WAIVER OF SIDEWALK ON SOUTH SIDE OF BUCK ISLAND ROAD STUB				/	/	/
			STREET LIGHTS AS PER COA DPM						

ORIGINAL

SIA Sequence #	COA DRC Project #	Size	Type of Improvement	Location	From	To	Private Inspector	City Inspector	City Cnst Engineer
SIERRA RANCH SUBDIVISION - UNIT 2									
			ONSITE PUBLIC STORM DRAIN IMPROVEMENTS						
		24" DIA	RCP W/ NEC. MH'S, LATERALS & INLETS	PUBLIC EASEMENT LOT 244	WEST BOUNDARY	PIPESPRING STREET	/	/	/
		24" DIA	RCP W/ NEC. MH'S, LATERALS & INLETS	PIPESPRING STREET	PUBLIC EASEMENT	CORONA RANCH ROAD	/	/	/
		24" DIA	RCP W/ NEC. MH'S, LATERALS & INLETS	CORONA RANCH RD	PIPESPRING STREET	LOTS 291/292	/	/	/
			OFFSITE DRAINAGE OPTION #1 INTERIM SOUTH POWERLINE RIPRAP CHANNEL W/DROP STRUCTURES & NECESSARY SEDIMENTATION CONTROL STRUCTURES	200' PNM EASEMENT	GIBSON BLVD	POND #2 - ANDERSON HTS APPROVED GRADING PLAN	/	/	/
			OFFSITE DRAINAGE OPTION #2 1.6 ACRE-FEET TEMPORARY RETENTION POND WITH PUBLIC EASEMENT AND COVENANT AND AGREEMENT	150' AMAFCA DRAINAGE EASEMENT			/	/	/
			1.0 ACRE-FEET TEMPORARY RETENTION POND WITH PUBLIC EASEMENT AND COVENANT AND AGREEMENT	150' AMAFCA DRAINAGE EASEMENT			/	/	/

NOTES: A GRADING AND DRAINAGE CERTIFICATION OF THE APPROVED GRADING PLAN IS REQUIRED PRIOR TO THE RELEASE OF FINANCIAL GUARANTEES.

THERE WILL BE NO RELEASE OF FINANCIAL GUARANTEE OR SIA UNTIL AGREEMENT IS PROCESSED AND APPROVED WITH AMAFCA FOR CONSTRUCTION OF THE AMOLE ARROYO IMPROVEMENTS.

ORIGINAL

SIA Sequence #	COA DRC Project #	Size	Type of Improvement	Location	From	To	Private Inspector	City Inspector	City Cnst Engineer
SIERRA RANCH SUBDIVISION - UNIT 2									
			ONSITE PUBLIC WATERLINE IMPROVEMENTS						
		8" DIA	WATERLINE W/ NEC VALVES FH'S, MJ'S & RJ'S	FOUR MILE ROAD	PIPESPRING STREET	LOTS 261/262	/	/	/
		6" DIA	WATERLINE W/ NEC. VALVES FH'S, MJ'S & RJ'S	CORONA RANCH RD	PIPESPRING STREET	LOTS 291/292	/	/	/
		6" DIA	WATERLINE W/ NEC. VALVES FH'S, MJ'S & RJ'S	WALNUT CANYON RD	PIPESPRING STREET	LOTS 328/329	/	/	/
		4-6" DIA	WATERLINE W/ NEC. VALVES FH'S, MJ'S & RJ'S	BUCK ISLAND ROAD	WEST STUB TERMINUS	LOTS 352/353	/	/	/
		6-8" DIA	WATERLINE W/ NEC. VALVES FH'S, MJ'S & RJ'S	PIPESTONE ROAD	PIPESPRING STREET	LOTS 208/356	/	/	/
		8" DIA	WATERLINE W/ NEC. VALVES FH'S, MJ'S & RJ'S	PIPESPRING STREET	FOUR MILE ROAD	PIPESTONE ROAD	/	/	/
		6" DIA	WATERLINE W/ NEC. VALVES FH'S, MJ'S & RJ'S	DEVILS TOWER ST	WALNUT CANYON RD	PIPESTONE ROAD	/	/	/
		6" DIA	WATERLINE W/ NEC. VALVES FH'S, MJ'S & RJ'S	MOUNTAINTOP DR	BUCK ISLAND ROAD	PIPESTONE ROAD	/	/	/
		20" DIA	WATERLINE W/ NEC. VALVES FH'S, MJ'S & RJ'S	PUBLIC EASEMENT IN EL RANCHO GRANDE UNIT 16	DELGADO	GIBSON BLVD. AT CHACO CANYON DRIVE	/	/	/
		18" DIA	WATERLINE W/ NEC. VALVES FH'S, MJ'S & RJ'S	FOUR MILE ROAD	FOSTER RANCH ST.	LOTS 261/262	/	/	/
		18" DIA	WATERLINE W/ NEC VALVES FH'S, MJ'S & RJ'S	FOSTER RANCH ST.	FOUR MILE ROAD	WALNUT CANYON ROAD	/	/	/
		18" DIA	WATERLINE W/ NEC. VALVES FH'S, MJ'S & RJ'S	WALNUT CANYON RD.	DEVILS TOWER ST.	FOSTER RANCH ST.	/	/	/
		18" DIA	WATERLINE W/ NEC. VALVES FH'S, MJ'S & RJ'S	DEVILS TOWER ST.	WALNUT CANYON RD.	PIPESTONE ROAD	/	/	/
		18" DIA	WATERLINE W/ NEC. VALVES FH'S, MJ'S & RJ'S	PIPESTONE ROAD	DEVILS TOWER ST	ALAMO CANYON DRIVE	/	/	/
		18" DIA	WATERLINE W/ NEC. VALVES FH'S, MJ'S & RJ'S	ALAMO CANYON DR	PIPESTONE ROAD	AMOLE MESA AVENUE	/	/	/
		12-18" DIA	WATERLINE W/ NEC. VALVES FH'S, MJ'S & RJ'S	AMOLE MESA AVE	LOTS 229	LOT 208	/	/	/
		NOTE	WATER METER FOR LANDSCAPING IN THE PUBLIC RIGHT-OF-WAY						

ORIGINAL

SIA Sequence #	COA DRC Project #	Size	Type of Improvement	Location	From	To	Private Inspector	City Inspector	City Cnst Engineer
			ONSITE PUBLIC SANITARY SEWER IMPROVEMENTS						
		8" DIA	SANITARY SEWER W/ NEC. MH'S & SERVICES	FOUR MILE ROAD	PIPESPRING STREET	LOTS 261/262	/	/	/
		8" DIA	SANITARY SEWER W/ NEC. MH'S & SERVICES	CORONA RANCH RD	PIPESPRING STREET	LOTS 291/292	/	/	/
		8" DIA	SANITARY SEWER W/ NEC. MH'S & SERVICES	WALNUT CANYON RD	PIPESPRING STREET	LOTS 328/329	/	/	/
		8" DIA	SANITARY SEWER W/ NEC. MH'S & SERVICES	BUCK ISLAND ROAD	WEST STUB TERMINUS	LOTS 352/353	/	/	/
		8" DIA	SANITARY SEWER W/ NEC. MH'S & SERVICES	PIPESTONE ROAD	PIPESPRING STREET	LOTS 208/356	/	/	/
		8" DIA	SANITARY SEWER W/ NEC. MH'S & SERVICES	PIPESPRING STREET	FOUR MILE ROAD	PIPESTONE ROAD	/	/	/
		8" DIA	SANITARY SEWER W/ NEC. MH'S & SERVICES	DEVILS TOWER ST	WALNUT CANYON RD	PIPESTONE ROAD	/	/	/
		8" DIA	SANITARY SEWER W/ NEC. MH'S & SERVICES	MOUNTAINTOP DR	BUCK ISLAND ROAD	PIPESTONE ROAD	/	/	/
		8" DIA	SANITARY SEWER W/ NEC. MH'S & SERVICES	PUBLIC EASEMENT LOT 224	WEST BOUNDARY	PIPESPRING STREET	/	/	/

NOTES:
1 LANDSCAPE MAINTENANCE AGREEMENT FOR LANDSCAPING IN THE PUBLIC RIGHT-OF-WAY
2 PERIMETER WALLS PER DRB APPROVED PERIMETER WALL DESIGN
3 WALL AND LANDSCAPING CERTIFICATION FROM REGISTERED ENGINEER AND/OR REGISTERED LANDSCAPE ARCHITECT REQUIRED PRIOR TO RELEASE OF FINANCIAL GUARANTEES.

SCOTT STEFFEN PREPARED BY PRINT NAME	01/25/05 DATE		1/26/05 DATE	Christina Sandoval PARKS & RECREATION DEPARTMENT	1/26/05 DATE
BOHANNAN HUSTON INC. FIRM.			1-26-05 DATE	Lynn M. Mann AMAFCA	1-26-05 DATE
 SIGNATURE	1/25/05 DATE		1/26/05 DATE	Bradley L. Bingham CITY ENGINEER	 DATE
MAXIMUM TIME ALLOW TO CONSTRUCT IMPROVEMENTS WITHOUT A DRB EXTENSION		N/A NEW MEXICO UTILITIES INC.	 DATE		 DATE

DESIGN REVIEW COMMITTEE REVISIONS

REVISION	DATE	DRC CHAIR	USER DEPARTMENT	AGENT/OWNER
1	3/31/05			

Current DRC
Project No _____

3 ORIGINAL

Figure 12

INFRASTRUCTURE LIST

EXHIBIT "A"
TO SUBDIVISION IMPROVEMENTS AGREEMENT
DEVELOPMENT REVIEW BOARD (D R.B.) REQUIRED INFRASTRUCTURE LIST

SIERRA RANCH SUBDIVISION
PRELIMINARY PLAT

Date Submitted January 25, 2005
Date Site Plan Approved _____
Date Preliminary Plat Approved 1/26/05
Date Preliminary Plat Expires 1/26/06

DRB Project No. **1003429**
APPLICATION NO. **04DRB-01950**

Following is a summary of PUBLIC/PRIVATE Infrastructure required to be constructed or financially guaranteed for the above development This Listing is not necessarily a complete listing During the SIA process and/or in the review of the construction drawings, if the DRC Chair determines that appurtenant items and/or unforeseen items have not been included in the infrastructure listing, the DRC Chair may include those items in the listing and related financial guarantee Likewise, if the DRC Chair determines that appurtenant or non-essential items can be deleted from the listing, those items may be deleted as well as the related portions of the financial guarantees. All such revisions require approval by the DRC Chair, the User Department and agent/owner If such approvals are obtained, these revisions to the listing will be incorporated administratively. In addition, any unforeseen items which arise during construction which are necessary to complete the project and which normally are the Subdivider's responsibility will be required as a condition of project acceptance and close out by the City.

SIA Sequence #	COA DRC Project #	Size	Type of Improvement	Location	From	To	Private Inspector	City Inspector	City Cnst Engineer
SIERRA RANCH SUBDIVISION - UNIT I									
			ONSITE PUBLIC ROADWAY IMPROVEMENTS						
		30' ~~EOA-F~~ F-F	ARTERIAL PAVING W/ PCC CURB & GUTTER, MEDIAN CURB AND PCC 6' WIDE SIDEWALK ON SOUTH SIDE ONLY	GIBSON BOULEVARD	CHACO CANYON DR	MESSINA DRIVE	/	/	/
		24' EOA-F	RESIDENTIAL PAVING W/ PCC CURB & GUTTER AND PCC 6' WIDE SIDEWALK ON WEST SIDE ONLY	MESSINA DRIVE	GIBSON BOULEVARD	AMOLE MESA AVENUE	/	/	/
		24' EOA-F	RESIDENTIAL PAVING W/ PCC CURB & GUTTER AND PCC 6' WIDE SIDEWALK ON NORTH SIDE ONLY	AMOLE MESA AVE	LOT 207	MESSINA DRIVE	/	/	/
		28' F-F	RESIDENTIAL PAVING W/ PCC CURB & GUTTER AND PCC 4' WIDE SIDEWALK ON BOTH SIDES*	FOUR MILE ROAD	LOTS 42/43	BISON SPRINGS STREET	/	/	/
		24' F-F	RESIDENTIAL PAVING W/ PCC CURB & GUTTER AND PCC 4' WIDE SIDEWALK ON NORTH SIDE ONLY*	FOUR MILE ROAD	BISON SPRINGS STREET	EAST STUB TERMINUS	/	/	/
		28' F-F	RESIDENTIAL PAVING W/ PCC CURB & GUTTER AND PCC 4' WIDE SIDEWALK ON BOTH SIDES*	CORONA RANCH RD	LOTS 76/77	BISON SPRINGS STREET	/	/	/
		28' F-F	RESIDENTIAL PAVING W/ PCC CURB & GUTTER AND PCC 4' WIDE SIDEWALK ON BOTH SIDES*	WALNUT CANYON RD	LOTS 109/110	BISON SPRINGS STREET	/	/	/
		48' F-F	RESIDENTIAL PAVING W/ PCC CURB & GUTTER AND PCC 6' WIDE SIDEWALK ON BOTH SIDES*	WALNUT CANYON RD	BISON SPRINGS STREET	MESSINA DRIVE	/	/	/
		28' F-F	RESIDENTIAL PAVING W/ PCC CURB & GUTTER AND PCC 4' WIDE SIDEWALK ON BOTH SIDES*	BUCK ISLAND ROAD	LOTS 148/149	BISON SPRINGS STREET	/	/	/

ORIGINAL

SIA Sequence #	COA DRC Project #	Size	Type of Improvement	Location	From	To	Private Inspector	City Inspector	City Cnst Engineer
			ONSITE PUBLIC ROADWAY IMPROVEMENTS (CONT.)						
		28' F-F	RESIDENTIAL PAVING W/ PCC CURB & GUTTER AND PCC 4' WIDE SIDEWALK ON BOTH SIDES*	PIPESTONE ROAD	LOTS 188/207	BIG SPRINGS ROAD	/	/	/
		36' F-F	RESIDENTIAL PAVING W/ PCC CURB & GUTTER AND PCC 4' WIDE SIDEWALK ON BOTH SIDES*	BIG SPRINGS ROAD	AMOLE MESA AVE	BISON SPRINGS STREET	/	/	/
		48' F-F	RESIDENTIAL PAVING W/ PCC CURB & GUTTER AND PCC 6' WIDE SIDEWALK ON BOTH SIDES*	CHACO CANYON DR	GIBSON BOULEVARD	FOUR MILE ROAD	/	/	/
		28' F-F	RESIDENTIAL PAVING W/ PCC CURB & GUTTER AND PCC 4' WIDE SIDEWALK ON BOTH SIDES*	SALADO CREEK ST	FOUR MILE ROAD	WALNUT CANYON ROAD	/	/	/
		28' F-F	RESIDENTIAL PAVING W/ PCC CURB & GUTTER AND PCC 4' WIDE SIDEWALK ON BOTH SIDES*	CARIZZO PLAIN DR	WALNUT CANYON RD	BUCK ISLAND ROAD	/	/	/
		28' F-F	RESIDENTIAL PAVING W/ PCC CURB & GUTTER AND PCC 4' WIDE SIDEWALK ON BOTH SIDES*	BISON SPRINGS ST	FOUR MILE ROAD	SOUTH STUB TERMINUS	/	/	/
		28' F-F	RESIDENTIAL PAVING W/ PCC CURB & GUTTER AND PCC 4' WIDE SIDEWALK ON EAST SIDE ONLY*	GILA CLIFF DRIVE	NORTH STUB TERMINUS	PIPESTONE ROAD	/	/	/
		25' WIDE	6' AC TRAIL	PEDESTRIAN ACCESS BETWEEN LOTS 206/207	PIPESTONE ROAD	AMOLE MESA AVENUE	/	/	/
							/	/	/

* SIDEWALKS TO BE DEFERRED PER DEFERRAL EXHIBIT 'B'.
WAIVER OF SIDEWALK ON SOUTH SIDE OF FOUR MILE ROAD STUB AND WEST SIDE OF GILA CLIFF DRIVE

STREET LIGHTS AS PER COA DPM

ORIGINAL

SIA Sequence #	COA DRC Project #	Size	Type of Improvement	Location	From	To	Private Inspector	City Inspector	City Cnst Engineer
SIERRA RANCH SUBDIVISION - UNIT I									
			ONSITE PUBLIC STORM DRAIN IMPROVEMENTS						
		18"-72" DIA	RCP W/ NEC. MH'S, LATERALS & INLETS	MESSINA DRIVE	GIBSON BLVD	AMOLE MESA AVENUE	/	/	/
		18-24" DIA	RCP W/ NEC. MH'S, LATERALS & INLETS	FOUR MILE ROAD	LOT 29	BISON SPRINGS STREET	/	/	/
		18"-24" DIA	RCP W/ NEC. MH'S, LATERALS & INLETS	CORONA RANCH RD	LOTS 76/77	SALADO CREEK STREET	/	/	/
		30" DIA	RCP W/ NEC. MH'S, LATERALS & INLETS	SALADO CREEK ST.	CORONA RANCH RD	WALNUT CANYON ROAD	/	/	/
		18" - 36" DIA	RCP W/ NEC MH'S, LATERALS & INLETS	WALNUT CANYON RD	LOTS 109/110	BISON SPRINGS STREET	/	/	/
		~~18~~ 24" DIA	RCP W/ NEC. MH'S, LATERALS & INLETS	BUCK ISLAND ROAD	LOT 138	BISON SPRINGS STREET	/	/	/
		18" - 24" DIA	RCP W/ NEC. MH'S, LATERALS & INLETS	PIPESTONE ROAD	LOTS 188/207	BIG SPRINGS ROAD	/	/	/
		30" DIA	RCP W/ NEC MH'S, LATERALS & INLETS	BIG SPRINGS ROAD	PIPESTONE ROAD	BISON SPRINGS STREET	/	/	/
		18" - 42" DIA	RCP W/ NEC. MH'S, LATERALS & INLETS	BISON SPRINGS ST	FOUR MILE ROAD	SOUTH STUB TERMINUS	/	/	/
		60" DIA	RCP W/ NEC. MH'S, LATERALS & INLETS	PUBLIC EASEMENT TRACT 16-A	BISON SPRINGS ST	MESSINA DRIVE	/	/	/
		~~48~~ 48" DIA	RCP W/ NEC. MH'S, LATERALS & INLETS	WALNUT CANYON RD.	BISON SPRINGS ST	MESSINA DRIVE	/	/	/
		54" DIA	RCP W/ NEC. MH'S, LATERALS & INLETS	OPEN RANGE AVE EL RANCHO GRANDE UNIT 15	MESSINA DRIVE	EXISTING STUB BLUE SKY STREET	/	/	/
			* THIS ITEM IS ON THE EL RANCHO GRANDE UNIT 15 INFRASTRUCTURE LIST DRB#1003030 AND SHOWN ON THE INFRASTRUCTURE PLANS, COA PROJECT #699388, WHICH HAS NOT GONE TO WORK ORDER						
		72" DIA	RCP W/ NEC. MH'S, LATERALS & INLETS	OPEN RANGE AVE SUN GATE SUBDIVISION	BLUE SKY STREET	BLAKE ROAD	/	/	/
			* THIS ITEM IS ON THE SUN GATE SUBDIVISION INFRASTRUCTURE LIST DRB#1003175, SHOWN ON THE INFRASTRUCTURE PLANS, COA PROJECT #736781, AND FINACIALLY GUARANTEED WITH THE SUN GATE FINAL PLAT. DEFERRED ITEM.						
		72" DIA	RCP W/ NEC. MH'S, LATERALS & INLETS	BLAKE ROAD	OPEN RANGE AVE	98TH STREET	/	/	/
			* THIS ITEM IS ON THE SUN GATE ESTATES SUBDIVISION INFRASTRUCTURE LIST DRB#1003591. SHOWN ON INFRASTRUCTURE PLANS, COA PROJECT #722783						
		72-90" DIA	RCP W/ NEC. MH'S, LATERALS & INLETS	BLAKE ROAD	98TH STREET	AMOLE ARROYO	/	/	/
			* SHOWN ON INFRASTRUCTURE PLANS, COA PROJECT #722783, WHICH HAS NOT GONE TO WORK ORDER.						

ORIGINAL

SIA Sequence #	COA DRC Project #	Size	Type of Improvement	Location	From	To	Private Inspector	City Inspector	City Cnst Engineer

SIERRA RANCH SUBDIVISION - UNIT I

ONSITE PUBLIC STORM DRAIN IMPROVEMENTS (CONT'D)

			4.2 ACRE-FEET SURGE POND WITH PUBLIC EASEMENT AND COVENANT AND AGREEMENT	PARK TRACT TRACT 16-A			/	/	/
			3.5 ACRE-FEET TEMPORARY RETENTION POND WITH PUBLIC EASEMENT AND COVENANT AND AGREEMENT	TRACT 16-D EL RANCHO GRANDE			/	/	/
			2.6 ACRE-FEET TEMPORARY RETENTION POND WITH PUBLIC EASEMENT AND COVENANT AND AGREEMENT	SIERRA RANCH UNIT 2			/	/	/

NOTES. A GRADING AND DRAINAGE CERTIFICATION OF THE APPROVED GRADING PLAN IS REQUIRED PRIOR TO THE RELEASE OF FINANCIAL GUARANTEES

THERE WILL BE NO RELEASE OF FINANCIAL GUARANTEE OR SIA UNTIL AGREEMENT IS PROCESSED AND APPROVED WITH AMAFCA FOR CONSTRUCTION OF THE AMOLE ARROYO IMPROVEMENTS.

ORIGINAL

SIA Sequence #	COA DRC Project #	Size	Type of Improvement	Location	From	To	Private Inspector	City Inspector	City Cnst Engineer
SIERRA RANCH SUBDIVISION - UNIT I									
			ONSITE PUBLIC WATERLINE IMPROVEMENTS						
		18" DIA	WATERLINE W/ NEC. VALVES FH'S, MJ'S & RJ'S	CHACO CANYON DR	GIBSON BLVD	FOUR MILE ROAD	/	/	/
		4-8" DIA	WATERLINE W/ NEC. VALVES FH'S, MJ'S & RJ'S	FOUR MILE ROAD	LOTS 42/43	EAST STUB TERMINUS	/	/	/
		6" DIA	WATERLINE W/ NEC VALVES FH'S, MJ'S & RJ'S	CORONA RANCH RD	LOTS 76/77	BISON SPRINGS ST	/	/	/
		6" DIA	WATERLINE W/ NEC VALVES FH'S, MJ'S & RJ'S	WALNUT CANYON RD	LOTS 109/110	BISON SPRINGS ST	/	/	/
		6" DIA	WATERLINE W/ NEC. VALVES FH'S, MJ'S & RJ'S	BUCK ISLAND ROAD	LOTS 148/149	BISON SPRINGS ST	/	/	/
		6" DIA	WATERLINE W/ NEC. VALVES FH'S, MJ'S & RJ'S	PIPESTONE ROAD	LOTS 188/207	BIG SPRINGS RD	/	/	/
		6-8" DIA	WATERLINE W/ NEC VALVES FH'S, MJ'S & RJ'S	BIG SPRINGS ROAD	AMOLE MESA AVE	BISON SPRINGS ST	/	/	/
		4-6" DIA	WATERLINE W/ NEC. VALVES FH'S, MJ'S & RJ'S	BISON SPRINGS ST	FOUR MILE ROAD	SOUTH STUB TERMINUS	/	/	/
		4" DIA	WATERLINE W/ NEC VALVES FH'S, MJ'S & RJ'S	GILA CLIFF DRIVE	NORTH STUB TERMINUS	PIPESTONE ROAD	/	/	/
		12" DIA	WATERLINE W/ NEC VALVES FH'S, MJ'S & RJ'S	AMOLE MESA AVE	LOT 207	MESSINA DRIVE	/	/	/
		12" DIA	WATERLINE W/ NEC. VALVES FH'S, MJ'S & RJ'S	AMOLE MESA AVE	MESSINA DRIVE	MESA ARENOSA	/	/	/
		NOTE	WATER METER FOR LANDSCAPING IN THE PUBLIC RIGHT-OF-WAY						

ORIGINAL

SIA Sequence #	COA DRC Project #	Size	Type of Improvement	Location	From	To	Private Inspector	City Inspector	City Cnst Engineer
SIERRA RANCH SUBDIVISION - UNIT I									
			ONSITE PUBLIC SANITARY SEWER IMPROVEMENTS						
		8" DIA	SANITARY SEWER W/ NEC. MH'S & SERVICES	FOUR MILE ROAD	LOTS 42/43	EAST STUB TERMINUS	/	/	/
		8" DIA	SANITARY SEWER W/ NEC. MH'S & SERVICES	CORONA RANCH RD	LOTS 76/77	BISON SPRINGS ST	/	/	/
		8" DIA	SANITARY SEWER W/ NEC. MH'S & SERVICES	WALNUT CANYON RD	LOTS 109/110	BISON SPRINGS ST	/	/	/
		8" DIA	SANITARY SEWER W/ NEC. MH'S & SERVICES	BUCK ISLAND ROAD	LOTS 148/149	BISON SPRINGS ST	/	/	/
		8" DIA	SANITARY SEWER W/ NEC. MH'S & SERVICES	PIPESTONE ROAD	LOTS 188/207	BIG SPRINGS RD	/	/	/
		8" DIA	SANITARY SEWER W/ NEC MH'S & SERVICES	BIG SPRINGS ROAD	PIPESTONE ROAD	BISON SPRINGS ST	/	/	/
		8" DIA	SANITARY SEWER W/ NEC. MH'S & SERVICES	GILA CLIFF DRIVE	NORTH STUB TERMINUS	PIPESTONE ROAD	/	/	/
		8" DIA	SANITARY SEWER W/ NEC MH'S & SERVICES	BISON SPRINGS ST	FOUR MILE ROAD	SOUTH STUB TERMINUS	/	/	/
		10" DIA	SANITARY SEWER W/ NEC. MH'S & SERVICES	PUBLIC EASEMENT	BISON SPRINGS ST	MESSINA DRIVE	/	/	/
		10" DIA	SANITARY SEWER W/ NEC. MH'S & SERVICES	MESSINA DRIVE	PUBLIC EASEMENT	AMOLE MESA AVENUE	/	/	/
		10" DIA	SANITARY SEWER W/ NEC. MH'S & SERVICES	AMOLE MESA AVE.	MESSINA DRIVE	PUBLIC EASEMENT IN EL RANCHO GRANDE UNIT 15	/	/	/
		8-10" DIA	SANITARY SEWER W/ NEC. MH'S & SERVICES	PUBLIC EASEMENT IN EL RANCHO GRANDE UNIT 15	AMOLE MESA AVENUE	FUTURE OPEN RANGE AVE. EXISTING STUB	/	/	/

SIA Sequence #	COA DRC Project #	Size	Type of Improvement	Location	From ORIGINAL	To	Private Inspector	City Inspector	City Cnst Engineer

SIERRA RANCH SUBDIVISION - UNIT 2

NOTE: ALL UNIT 1 PUBLIC IMPROVEMENTS REQUIRED FOR UNIT 2.

ONSITE PUBLIC ROADWAY IMPROVEMENTS

		30' ~~EOA-F~~ F-F	ARTERIAL PAVING W/ PCC CURB & GUTTER, MEDIAN CURB AND PCC 6' WIDE SIDEWALK ON SOUTH SIDE ONLY	GIBSON BOULEVARD	LOT 247	CHACO CANYON DR	/	/	/
		24' EOA-F	RESIDENTIAL PAVING W/ PCC CURB & GUTTER AND PCC 6' WIDE SIDEWALK ON NORTH SIDE ONLY	AMOLE MESA AVE	LOT 229	LOT 208	/	/	/
		28' F-F	RESIDENTIAL PAVING W/ PCC CURB & GUTTER AND PCC 4' WIDE SIDEWALK ON BOTH SIDES*	FOUR MILE ROAD	PIPESPRING STREET	LOTS 261/262	/	/	/
		28' F-F	RESIDENTIAL PAVING W/ PCC CURB & GUTTER AND PCC 4' WIDE SIDEWALK ON BOTH SIDES*	CORONA RANCH RD	PIPESPRING STREET	LOTS 291/292	/	/	/
		28' F-F	RESIDENTIAL PAVING W/ PCC CURB & GUTTER AND PCC 4' WIDE SIDEWALK ON BOTH SIDES*	WALNUT CANYON RD	PIPESPRING STREET	LOTS 328/329	/	/	/
		24' F-F	RESIDENTIAL PAVING W/ PCC CURB & GUTTER AND PCC 4' WIDE SIDEWALK ON NORTH SIDE ONLY*	BUCK ISLAND ROAD	WEST STUB TERMINUS	ALAMO CANYON DRIVE	/	/	/
		28' F-F	RESIDENTIAL PAVING W/ PCC CURB & GUTTER AND PCC 4' WIDE SIDEWALK ON BOTH SIDES*	BUCK ISLAND ROAD	ALAMO CANYON DR	LOTS 352/353	/	/	/
		28' F-F	RESIDENTIAL PAVING W/ PCC CURB & GUTTER AND PCC 4' WIDE SIDEWALK ON BOTH SIDES*	PIPESTONE ROAD	PIPESPRING STREET	LOTS 208/356	/	/	/
		28' F-F	RESIDENTIAL PAVING W/ PCC CURB & GUTTER AND PCC 4' WIDE SIDEWALK ON BOTH SIDES*	PIPESPRING STREET	FOUR MILE ROAD	PIPESTONE ROAD	/	/	/
		28' F-F	RESIDENTIAL PAVING W/ PCC CURB & GUTTER AND PCC 4' WIDE SIDEWALK ON BOTH SIDES*	DEVILS TOWER ST	WALNUT CANYON RD	PIPESTONE ROAD	/	/	/
		48' F-F	RESIDENTIAL PAVING W/ PCC CURB & GUTTER AND PCC 6' WIDE SIDEWALK ON BOTH SIDES*	ALAMO CANYON DR	PIPESTONE ROAD	AMOLE MESA AVENUE	/	/	/
		28' F-F	RESIDENTIAL PAVING W/ PCC CURB & GUTTER AND PCC 4' WIDE SIDEWALK ON BOTH SIDES*	ALAMO CANYON DR	BUCK ISLAND ROAD	PIPESTONE ROAD	/	/	/
		28' F-F	RESIDENTIAL PAVING W/ PCC CURB & GUTTER AND PCC 4' WIDE SIDEWALK ON BOTH SIDES*	FOSTER RANCH ST	FOUR MILE ROAD	WALNUT CANYON ROAD	/	/	/
		28' F-F	RESIDENTIAL PAVING W/ PCC CURB & GUTTER AND PCC 4' WIDE SIDEWALK ON BOTH SIDES*	MOUNTAINTOP DR	BUCK ISLAND ROAD	PIPESTONE ROAD	/	/	/
							/	/	/

* SIDEWALKS TO BE DEFERRED PER DEFERRAL EXHIBIT 'B'
WAIVER OF SIDEWALK ON SOUTH SIDE OF BUCK ISLAND ROAD STUB

STREET LIGHTS AS PER COA DPM

ORIGINAL

SIA Sequence #	COA DRC Project #	Size	Type of Improvement	Location	From	To	Private Inspector	City Inspector	City Cnst Engineer
SIERRA RANCH SUBDIVISION - UNIT 2									
			ONSITE PUBLIC STORM DRAIN IMPROVEMENTS						
		24" DIA	RCP W/ NEC. MH'S, LATERALS & INLETS	PUBLIC EASEMENT LOT 244	WEST BOUNDARY	PIPESPRING STREET	/	/	/
		24" DIA	RCP W/ NEC. MH'S, LATERALS & INLETS	PIPESPRING STREET	PUBLIC EASEMENT	CORONA RANCH ROAD	/	/	/
		24" DIA	RCP W/ NEC. MH'S, LATERALS & INLETS	CORONA RANCH RD	PIPESPRING STREET	LOTS 291/292	/	/	/
			OFFSITE DRAINAGE OPTION #1 INTERIM SOUTH POWERLINE RIPRAP CHANNEL W/DROP STRUCTURES & NECESSARY SEDIMENTATION CONTROL STRUCTURES	200' PNM EASEMENT	GIBSON BLVD	POND #2 - ANDERSON HTS APPROVED GRADING PLAN	/	/	/
			OFFSITE DRAINAGE OPTION #2 1.6 ACRE-FEET TEMPORARY RETENTION POND WITH PUBLIC EASEMENT AND COVENANT AND AGREEMENT	150' AMAFCA DRAINAGE EASEMENT			/	/	/
			1.0 ACRE-FEET TEMPORARY RETENTION POND WITH PUBLIC EASEMENT AND COVENANT AND AGREEMENT	150' AMAFCA DRAINAGE EASEMENT			/	/	/

NOTES: A GRADING AND DRAINAGE CERTIFICATION OF THE APPROVED GRADING PLAN IS REQUIRED PRIOR TO THE RELEASE OF FINANCIAL GUARANTEES.

THERE WILL BE NO RELEASE OF FINANCIAL GUARANTEE OR SIA UNTIL AGREEMENT IS PROCESSED AND APPROVED WITH AMAFCA FOR CONSTRUCTION OF THE AMOLE ARROYO IMPROVEMENTS

ORIGINAL

SIA Sequence #	COA DRC Project #	Size	Type of Improvement	Location	From	To	Private Inspector	City Inspector	City Cnst Engineer
SIERRA RANCH SUBDIVISION - UNIT 2									
			ONSITE PUBLIC WATERLINE IMPROVEMENTS						
		8" DIA	WATERLINE W/ NEC VALVES FH'S, MJ'S & RJ'S	FOUR MILE ROAD	PIPESPRING STREET	LOTS 261/262	/	/	/
		6" DIA	WATERLINE W/ NEC. VALVES FH'S, MJ'S & RJ'S	CORONA RANCH RD	PIPESPRING STREET	LOTS 291/292	/	/	/
		6" DIA	WATERLINE W/ NEC. VALVES FH'S, MJ'S & RJ'S	WALNUT CANYON RD	PIPESPRING STREET	LOTS 328/329	/	/	/
		4-6" DIA	WATERLINE W/ NEC. VALVES FH'S, MJ'S & RJ'S	BUCK ISLAND ROAD	WEST STUB TERMINUS	LOTS 352/353	/	/	/
		6-8" DIA	WATERLINE W/ NEC. VALVES FH'S, MJ'S & RJ'S	PIPESTONE ROAD	PIPESPRING STREET	LOTS 208/356	/	/	/
		8" DIA	WATERLINE W/ NEC. VALVES FH'S, MJ'S & RJ'S	PIPESPRING STREET	FOUR MILE ROAD	PIPESTONE ROAD	/	/	/
		6" DIA	WATERLINE W/ NEC. VALVES FH'S, MJ'S & RJ'S	DEVILS TOWER ST	WALNUT CANYON RD	PIPESTONE ROAD	/	/	/
		6" DIA	WATERLINE W/ NEC. VALVES FH'S, MJ'S & RJ'S	MOUNTAINTOP DR	BUCK ISLAND ROAD	PIPESTONE ROAD	/	/	/
		20" DIA	WATERLINE W/ NEC. VALVES FH'S, MJ'S & RJ'S	PUBLIC EASEMENT IN EL RANCHO GRANDE UNIT 16	DELGADO	GIBSON BLVD. AT CHACO CANYON DRIVE	/	/	/
		18" DIA	WATERLINE W/ NEC VALVES FH'S, MJ'S & RJ'S	FOUR MILE ROAD	FOSTER RANCH ST.	LOTS 261/262	/	/	/
		18" DIA	WATERLINE W/ NEC VALVES FH'S, MJ'S & RJ'S	FOSTER RANCH ST.	FOUR MILE ROAD	WALNUT CANYON ROAD	/	/	/
		18" DIA	WATERLINE W/ NEC. VALVES FH'S, MJ'S & RJ'S	WALNUT CANYON RD.	DEVILS TOWER ST.	FOSTER RANCH ST.	/	/	/
		18" DIA	WATERLINE W/ NEC. VALVES FH'S, MJ'S & RJ'S	DEVILS TOWER ST.	WALNUT CANYON RD.	PIPESTONE ROAD	/	/	/
		18" DIA	WATERLINE W/ NEC VALVES FH'S, MJ'S & RJ'S	PIPESTONE ROAD	DEVILS TOWER ST	ALAMO CANYON DRIVE	/	/	/
		18" DIA	WATERLINE W/ NEC. VALVES FH'S, MJ'S & RJ'S	ALAMO CANYON DR	PIPESTONE ROAD	AMOLE MESA AVENUE	/	/	/
		12-18" DIA	WATERLINE W/ NEC. VALVES FH'S, MJ'S & RJ'S	AMOLE MESA AVE	LOTS 229	LOT 208	/	/	/
		NOTE	WATER METER FOR LANDSCAPING IN THE PUBLIC RIGHT-OF-WAY						

ORIGINAL

SIA Sequence #	COA DRC Project #	Size	Type of Improvement	Location	From	To	Private Inspector	City Inspector	City Cnst Engineer
			ONSITE PUBLIC SANITARY SEWER IMPROVEMENTS						
		8" DIA	SANITARY SEWER W/ NEC. MH'S & SERVICES	FOUR MILE ROAD	PIPESPRING STREET	LOTS 261/262	/	/	/
		8" DIA	SANITARY SEWER W/ NEC. MH'S & SERVICES	CORONA RANCH RD	PIPESPRING STREET	LOTS 291/292	/	/	/
		8" DIA	SANITARY SEWER W/ NEC MH'S & SERVICES	WALNUT CANYON RD	PIPESPRING STREET	LOTS 328/329	/	/	/
		8" DIA	SANITARY SEWER W/ NEC. MH'S & SERVICES	BUCK ISLAND ROAD	WEST STUB TERMINUS	LOTS 352/353	/	/	/
		8" DIA	SANITARY SEWER W/ NEC. MH'S & SERVICES	PIPESTONE ROAD	PIPESPRING STREET	LOTS 208/356	/	/	/
		8" DIA	SANITARY SEWER W/ NEC. MH'S & SERVICES	PIPESPRING STREET	FOUR MILE ROAD	PIPESTONE ROAD	/	/	/
		8" DIA	SANITARY SEWER W/ NEC MH'S & SERVICES	DEVILS TOWER ST	WALNUT CANYON RD	PIPESTONE ROAD	/	/	/
		8" DIA	SANITARY SEWER W/ NEC. MH'S & SERVICES	MOUNTAINTOP DR	BUCK ISLAND ROAD	PIPESTONE ROAD	/	/	/
		8" DIA	SANITARY SEWER W/ NEC. MH'S & SERVICES	PUBLIC EASEMENT LOT 224	WEST BOUNDARY	PIPESPRING STREET	/	/	/

NOTES: 1 LANDSCAPE MAINTENANCE AGREEMENT FOR LANDSCAPING IN THE PUBLIC RIGHT-OF-WAY
2 PERIMETER WALLS PER DRB APPROVED PERIMETER WALL DESIGN
3 WALL AND LANDSCAPING CERTIFICATION FROM REGISTERED ENGINEER AND/OR REGISTERED LANDSCAPE ARCHITECT REQUIRED PRIOR TO RELEASE OF FINANCIAL GUARANTEES.

SCOTT STEFFEN — 01/25/05
PREPARED BY PRINT NAME — DATE

DRB CHAIR — 1/26/05 DATE

Christina Sandoval — 1/26/05
PARKS & RECREATION DEPARTMENT — DATE

BOHANNAN HUSTON INC
FIRM:

TRANSPORTATION DEVELOPMENT — 1-26-05 DATE

Lynn M. Mann — 1-26-05
AMAFCA — DATE

Scott J Steffen — 1/25/05
SIGNATURE — DATE

UTILITY DEVELOPMENT — 1/26/05 DATE

Bradley L. Bingham
CITY ENGINEER — DATE

MAXIMUM TIME ALLOW TO CONSTRUCT IMPROVEMENTS WITHOUT A DRB EXTENSION

N/A
NEW MEXICO UTILITIES INC. — DATE

DATE

DESIGN REVIEW COMMITTEE REVISIONS

REVISION	DATE	DRC CHAIR	USER DEPARTMENT	AGENT/OWNER

City of Albuquerque

DEVELOPMENT PLAN REVIEW APPLICATION

	Supplemental form		Supplemental form
SUBDIVISION	**S**	**ZONING & PLANNING**	**Z**
☒ Major Subdivision action		☐ Annexation	
☐ Minor Subdivision action		☐ County Submittal	
☐ Vacation	**V**	☐ EPC Submittal	
☐ Variance (Non-Zoning)		☐ Zone Map Amendment (Establish or Change Zoning	
SITE DEVELOPMENT PLAN	**P**	☐ Sector Plan (Phase I, II, III)	
☐ ...for Subdivision Purposes		☐ Amendment to Sector, Area, Facility or Comprehensive Plan	
☐ ...for Building Permit		☐ Text Amendment	
☐ IP Master Development Plan			
☐ Cert. of Appropriateness (LUCC)	**L**	**APPEAL / PROTEST of...**	**A**
		☐ Decision by: DRB, EPC, LUCC, Planning Director or Staff, ZHE, Zoning Board of Appeals	

PRINT OR TYPE IN BLACK INK ONLY. The applicant or agent must submit the completed application in person to the Planning Department Development Services Center, 600 2nd Street NW, Albuquerque, NM 87102. Fees must be paid at the time of application. Refer to supplemental forms for submittal requirements.

APPLICANT INFORMATION:

NAME: CURB, INC. PHONE: 899-9656
ADDRESS: 5160 SAN FRANCISCO NE FAX: 875-1723
CITY: ALBUQUERQUE STATE NM ZIP87109 E-MAIL: ____
Proprietary interest in site: OWNER
AGENT (if any): BOHANNAN HUSTON INC. PHONE: 823-1000
ADDRESS: 7500 JEFFERSON NE FAX: 798-7988
CITY: ALBUQUERQUE STATE NM ZIP 87109 E-MAIL: ____

DESCRIPTION OF REQUEST: SITE PLAN FOR SUBDIVISION APPROVAL

Is the applicant seeking incentives pursuant to the Family Housing Development Program? ☐ Yes. ☒ No.

SITE INFORMATION: ACCURACY OF THE LEGAL DESCRIPTION IS CRUCIAL! ATTACH A SEPARATE SHEET IF NECESSARY.

Lot or Tract No. TRACT 16B, 16C EL RANCHO GRANDE Block: ____ Unit: ____

Subdiv. / Addn. SIERRA RANCH SUBDIVISION

Current Zoning: R-LT R-D Proposed zoning: ____

Zone Atlas page(s): N-8 No. of **existing** lots: 2 No. of **proposed** lots: 383

Total area of site (acres): 61.2 Density if applicable: dwellings per gross acre: ____ dwellings per net acre: ____

Within city limits? ☒ Yes. No ☐, but site is within 5 miles of the city limits (DRB jurisdiction.) Within 1000FT of a landfill? NO

UPC No. 100805446943510102 MRGCD Map No. ____

LOCATION OF PROPERTY BY STREETS: On or Near: GIBSON BLVD. SW
Between: ____ and ____

CASE HISTORY:

List **any** current or prior case number that may be relevant to your application (Proj., App., DRB-, AX_,Z_, V_, S_, etc.): DRB# 1003429

Check-off if project was previously reviewed by Sketch Plat/Plan ☐, or Pre-application Review Team ☐. Date of review: ____

SIGNATURE Scott J Steffen DATE 1/18/05

(Print) SCOTT STEFFEN ☐ Applicant ☒ Agent

FOR OFFICIAL USE ONLY Form revised 10/03

☐ **INTERNAL ROUTING**
☐ All checklists are complete
☐ All fees have been collected
☐ All case #s are assigned
☐ AGIS copy has been sent
☐ Case history #s are listed
☐ Site is within 1000ft of a landfill
☐ F.H.D.P. density bonus
☐ F.H.D.P. fee rebate

Application case numbers	Action	S.F.	Fees
05DRB - ____ - 00090	SPS	P(3)	$ 385.00
____ - ____ - ____	CMF	____	$ 20.00
____ - ____ - ____	____	____	$ ____
____ - ____ - ____	____	____	$ ____
____ - ____ - ____	____	____	$ ____
			Total
Hearing date 1-26-05			$ 405.00

1-18-05
Planner signature / date

Project # 1003429

FORM P(3): SITE PLAN REVIEW - D.R.B. MEETING (UNADVERTISED)

❑ SKETCH PLAN REVIEW AND COMMENT

__ Scaled site sketch and related drawings showing proposed land use including structures, parking, Bldg. setbacks, adjacent rights-of-way and street improvements, etc. (folded to fit into an 8.5" by 14" pocket) **6** copies.
__ Zone Atlas map with the entire property(ies) precisely and clearly outlined and crosshatched (to be photocopied)
__ Letter briefly describing, explaining, and justifying the request
__ Any original and/or related file numbers are listed on the cover application

Meetings are approximately 8 DAYS after the Tuesday noon filing deadline. **Your attendance is required.**

☒ SITE DEVELOPMENT PLAN FOR SUBDIVISION

✓ Scaled site plan and related drawings (folded to fit into an 8.5" by 14" pocket) **6** copies.
__ Zone Atlas map with the entire property(ies) precisely and clearly outlined and crosshatched (to be photocopied)
✓ Letter briefly describing, explaining, and justifying the request
✓ Letter of authorization from the property owner if application is submitted by an agent
✓ Copy of the document delegating approval authority to the DRB
NA Infrastructure List, if relevant to the site plan
✓ Fee (see schedule)
✓ Any original and/or related file numbers are listed on the cover application

Meetings are approximately 8 DAYS after the Tuesday noon filing deadline. **Bring the original Mylar** to the meeting for sign-off. **Your attendance is required.**

❑ SITE DEVELOPMENT PLAN FOR BUILDING PERMIT

__ Site plan and related drawings (folded to fit into an 8.5" by 14" pocket) **6** copies.
__ Site Plan for Subdivision, if applicable, previously approved or simultaneously submitted. **6** copies.
__ Solid Waste Management Department signature on Site Plan
__ Zone Atlas map with the entire property(ies) precisely and clearly outlined and crosshatched (to be photocopied)
__ Letter briefly describing, explaining, and justifying the request
__ Letter of authorization from the property owner if application is submitted by an agent
__ Copy of the document delegating approval authority to the DRB
__ Infrastructure List, if relevant to the site plan
__ Completed Site Plan for Building Permit Checklist
__ Blue-line copy of Site Plan with Fire Marshal's stamp
__ Fee (see schedule)
__ Any original and/or related file numbers are listed on the cover application

Meetings are approximately 8 DAYS after the Tuesday noon filing deadline. **Bring the original Mylar** to the meeting for sign-off. **Your attendance is required.**

❑ AMENDED SITE DEVELOPMENT PLAN FOR SUBDIVISION

❑ AMENDED SITE DEVELOPMENT PLAN FOR BUILDING PERMIT

__ Proposed amended Site Plan (folded to fit into an 8.5" by 14" pocket) **6** copies.
__ DRB signed Site Plan being amended (folded to fit into an 8.5" by 14" pocket) Copies as needed above
__ Zone Atlas map with the entire property(ies) precisely and clearly outlined and crosshatched (to be photocopied)
__ Letter briefly describing, explaining, and justifying the request
__ Letter of authorization from the property owner if application is submitted by an agent
__ Infrastructure List, if relevant to the site plan
__ Completed Site Plan for Building Permit Checklist (not required for amendment of SDP for Subdivision)
__ Fee (see schedule)
__ Any original and/or related file numbers are listed on the cover application

Meetings are approximately 8 DAYS after the Tuesday noon filing deadline. **Bring the original Mylar** to the meeting for sign-off. **Your attendance is required.**

❑ D.R.B. FINAL SIGN-OFF FOR E.P.C. APPROVED S.D.P. for SUBDIVISION

❑ D.R.B. FINAL SIGN-OFF FOR E.P.C. APPROVED S.D.P. for BUILDING PERMIT

__ Site plan and related drawings (folded to fit into an 8.5" by 14" pocket) **6** copies.
__ Approved Grading and Drainage Plan (folded to fit into an 8.5" by 14" pocket) **6** copies.
__ Solid Waste Management Department signature on Site Plan (not required for SDP for Subdivision)
__ Zone Atlas map with the entire property(ies) precisely and clearly outlined and crosshatched (to be photocopied)
__ Letter carefully explaining how each EPC condition has been met **and** a copy of the EPC Notification of Decision
__ Infrastructure List, if relevant to the site plan
__ Blue-line copy of Site Plan with Fire Marshal's stamp (not required for SDP for Subdivision)
__ Any original and/or related file numbers are listed on the cover application

Meetings are approximately 8 DAYS after the Tuesday noon filing deadline. **Bring the original Mylar** to the meeting for sign-off. **Your attendance is required.**

I, the applicant, acknowledge that any information required but not submitted with this application will likely result in deferral of actions.

SCOTT J. STEFFEN
Applicant name (print)

Scott J. Steffen 1/18/05
Applicant signature / date

Form revised **October 2004**

❑ Checklists complete
❑ Fees collected
❑ Case #s assigned
❑ Related #s listed

Application case numbers
05DRB -00090
- -
- -

1-18-05
Planner signature / date

Project # 1003429

M-8-Z

M-7-Z

M-9-Z

N-7-Z

N-9-Z

P-7-Z

P-9-Z

P-8-Z

WESTGATE DRAINAGE DAM
SP-93-200

WALL OVERLAY ZONE R-1/WO-4

AMOLE ARROYO DESIGN OVERLAY ZONE

RIO BRAVO

R-D

A1

GIBSON

R-LT

SANDY RIDGE

EL RANCHO

SANDY CREEK

GRANDE

SANDY TRAIL

(UNIT 14)

EL RANCHO

GRANDE

2A

2B

2C

2D

1

16

B1

R-LT

RIO BRAVO PARTNERS

S-95-27

SP 90-173

1003824

1002516

R-D

R-LT

Zone Atlas Page: **N-8-Z**

Map amended through: **Aug 06, 2004**

Selected Symbols

- Unincorporated Areas
- Sector Plan Boundaries
- Parcel Boundaries
- Easement Lines
- Freeway Lanes
- Jurisdictional Boundaries
- Westgate Wall
- Escarpment
- Grant Boundaries
- Petroglyph
- H-1 Buffer Zone
- Arroyos
- LDN Noise Level
- Airport Clearance Zone
- Design Overlay Zones

Feet

0 750 1,500

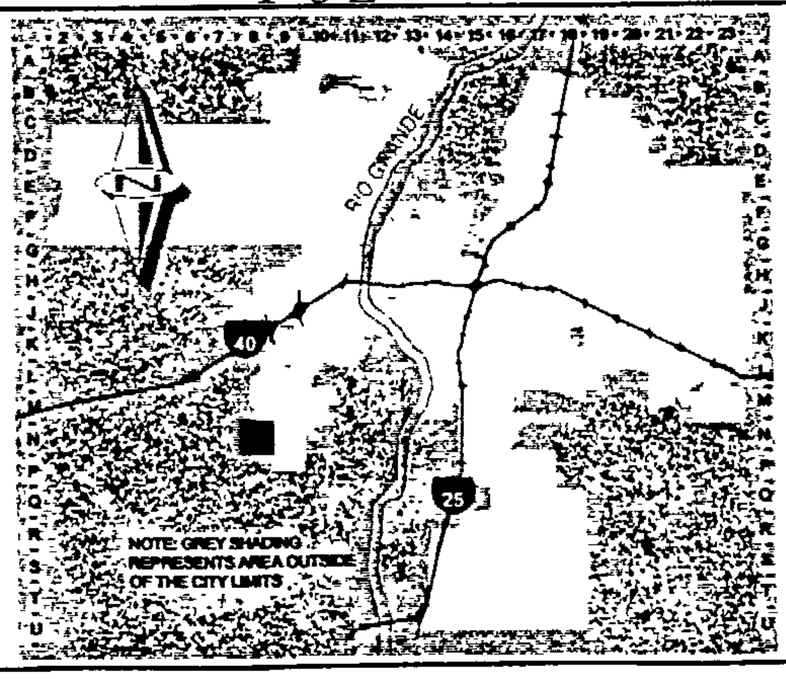

CITY OF ALBUQUERQUE
1706
THREE HUNDRED YEARS
1706 • 2006
ALBUQUERQUE
Haciendo Historia
A lbuquerque G eographic I nformation S ystem
PLANNING DEPARTMENT

© Copyright 2004

CURB, INC.

5160 San Francisco NE
Albuquerque, New Mexico 87109
Telephone (505) 881.9190
Fax (505) 875.1723

January 17, 2005

Ms. Sheran Matson
DRB Chair
Plaza Del Sol
City of Albuquerque
PO Box 1293
Albuquerque, NM 87103

RE: Site Plan for Subdivision - Sierra Ranch Subdivision

Dear Ms. Matson:

The purpose of this letter is to authorize Bohannan Huston Inc. to act as Curb Inc.'s agent for the purpose of processing Sierra Ranch Subdivision.

If you have any questions or concerns regarding this letter, please do not hesitate to contact me. Thank you for your courtesy in this matter.

Sincerely,

Stan Strickman
Vice President

Cc: Scott Steffen, BHI

Bohannan ^ Huston INC.

Courtyard I
7500 Jefferson St. NE
Albuquerque, NM
87109-4335

www.bhinc.com

voice: 505.823.1000
facsimile: 505.798.7988
toll free: 800.877.5332

January 18, 2005

Sheran Matson, Chair
Development Review Board
City of Albuquerque
P.O. Box 1293
Albuquerque, New Mexico 87103

Re: Site Plan for Subdivision Sierra Ranch Subdivision, DRB Project #1003429

Dear Sheran:

We are requesting Site Plan for Subdivision and Landscape Plan approval for the Sierra Ranch Subdivision. The Sierra Ranch Subdivision consists of two units. Unit 1 is a replat of Tract 16-B, El Rancho Grande, and Unit 2 is a replat of Tract 16-C, El Rancho Grande. A request for Preliminary plat approval has previously been submitted and is scheduled to be heard on January 26, 2005.

The subject property is located west of the El Rancho Grande Unit 14 and Unit 15 Subdivisions at the southwest corner of the Gibson Boulevard and Messina Drive intersection and contains approximately 61.0 acres. The majority of the site is zoned R-D and is located in an area of the city not covered by a sector development plan. The proposed use of the site is for single-family residential units to be constructed in accordance with the R-T zoning code restrictions. In accordance with Paragraph 14-16-2-14.C of the comprehensive zoning code, this use is permissive and requires the submittal of a site plan for subdivision and landscape plan for review and approval by the Development Review Board.

Enclosed for Development Review Board (DRB) review and approval are copies of the following information:

- Application for Development Review
- Six (6) copies each of the Site Plan for Subdivision and Landscaping Plan
- One (1) copy of Owner Authorization Letter
- One (1) copy of document delegating approval authority to DRB
- Fee in the amount of $405.00

Please place this item on the DRB Agenda to be heard January 26, 2005. If you have any questions or require further information, please call me at 823-1000.

Sincerely,

Scott J. Steffen, P.E.
Project Manager
Community Development and Planning Group

SS
Enclosures

P \050188\cdp\corres\Letters\050188 Site plan letter doc

§ 14-16-2-14 R-D RESIDENTIAL AND RELATED USES ZONE, DEVELOPING AREA.

This zone permits a mixture of dwelling unit types and incidental related commercial activities.

(A) *Permissive Uses.*

(1) Permissive uses when pursuant to a Sector Development Plan adopted by the Planning Commission, and to a Site Development Plan and a Landscaping Plan approved by the Planning Director:

(a) Uses permissive in the R-3 zone.

(b) Permissive uses in the C-1 zone, except shopping centers. Such incidental commercial uses shall not exceed 15% of the R-D zone covered by a given Sector Development Plan.

(c) Mobile home development.

(B) Permissive uses when pursuant only to a Sector Development Plan, adopted by the Planning Commission: uses permissive in the R-T zone, subject to all controls of the R-T zone.

(C) Permissive uses, in areas not covered by an adopted Sector Development Plan, but pursuant to a Site Development Plan and Landscaping Plan approved by the Planning Director: uses permissive in the R-T zone, subject to all controls of the R-T zone.

(D) Permissive uses in areas not covered by an adopted Sector Development Plan or more detailed plan: uses permissive in the R-1 zone, subject to all controls of the R-1 zone.

(E) *Conditional Uses.*

(1) Uses conditional in the R-1 zone when the area is not covered by an adopted Sector Development Plan.

(2) Uses conditional in the R-3 zone when the area is covered by an adopted Sector Development Plan.

(3) Uses conditional in the C-1 zone on commercial locations approved by a Sector Development Plan.

(F) *Open Space.*

(1) Two thousand four hundred or more square feet of open space per dwelling shall be preserved. Of the total 2,400 square feet, the following minimum amounts shall be usable open space on the lot with the dwelling: 200 square feet for each efficiency or one-bedroom dwelling; 250 square feet for each two-bedroom dwelling, and 300 square feet for each dwelling containing three or more bedrooms. The remaining requirement may be met by the alternatives listed in § 14-16-3-8(A) of this Zoning Code.

(2) When an aggregate of two or more dwelling units is constructed on any given lot, the development shall include landscaping of the ground-level usable open space planted and maintained according to a landscaping plan approved by the Zoning Enforcement Officer.

(G) *Procedure.* Procedure, in addition to that specified in § 14-16-4-3 of this Zoning Code, shall be as follows: An area may be zoned R-D with or without simultaneous approval of a Sector Development Plan. However, before the first building permit may be issued one of the following shall take place:

(1) A Sector Development Plan covering the area is adopted by the City as provided in § 14-16-4-3 of this Zoning Code.

I. § 14-16-2-9 R-T RESIDENTIAL ZONE.

This zone provides suitable sites for houses, townhouses, and uses incidental thereto in the Established and Central Urban areas.

(A) *Permissive Uses.*

(1) Uses permissive in the R-1 zone, except:

(a) Agricultural animal keeping (see § 14-16-2-6(A)(2)(b)) is not permitted;

(b) Front yard parking of recreational vehicles (§ 14-16-2-6(A)(2)(h)3.) is not permitted;

(c) Hobby breeders (see § 14-16-2-6(A)(2)(k)) are not permitted; and

(d) Houses are not limited to one per lot.

(2) Townhouses.

(B) *Conditional Uses.* Uses conditional in the R-1 zone.

(C) *Height.* Structures shall not exceed 26 feet in height, except as provided in § 14-16-3-3 of this Zoning Code.

(D) *Lot Size.*

(1) For a townhouse, except as provided in division (2) below, minimum lot area shall be 2,200 square feet per dwelling unit; minimum lot width shall be 22 feet per dwelling unit.

(2) For a townhouse in a Family Housing Development, minimum lot area shall be 1,760 square feet; minimum lot width shall be 18 feet.

(3) For a house, except as provided in division (4) below, minimum lot area shall be 3,600 square feet per dwelling unit; minimum lot width shall be 36 feet.

(4) For a house in a Family Housing Development, minimum lot area shall be 2,880 square feet; minimum lot width shall be 29 feet.

(E) *Setback.*

(1) There shall be a front-yard setback of not less than 15 feet except driveways shall be not less than 20 feet long.

(2) There shall be no required side-yard setback except:

(a) There shall be ten feet on the street side of corner lots.

(b) There shall be five feet from a side lot line that separates the R-T zone from another zone.

(3) There shall be a rear-yard setback of:

(a) Not less than 15 feet; or

(b) For houses with offset rear lot lines, not less than five feet, provided that the average rear yard setback is not less than 15 feet. Such reduced setbacks are allowed only when approved by the Planning Director and specified on a subdivision plat for not less than two back-to-back lots.

(4) There shall be a distance of not less than ten feet between residential buildings.

(F) *Off-Street Parking.* Off-street parking spaces shall be as provided in § 14-16-3-1 of this Zoning Code.

(G) *Usable Open Space.*

(1) Usable open space shall be provided on-site at 750 square feet per dwelling unit.

(2) Where an aggregate of two or more dwelling units is constructed on any given lot, the development shall include landscaping of the ground-level usable open space planted and maintained according to a landscaping plan approved by the Zoning Enforcement Officer.

(H) An air quality impact review and assessment may be required. See § 14-16-3-14 of this Zoning Code.

(I) *Dwelling Units Per Building.* Where the rear yard(s) of townhouse units abut the rear or side yard areas of lots zoned specifically for houses, no more than two townhouse units per residential building shall be permitted.

('74 Code, § 7-14-13) (Ord. 80-1975; Am. Ord. 40-1976; Am. Ord. 38-1978; Am. Ord. 23-1979; Am. Ord. 54-1980; Am. Ord. 92-1980; Am. Ord. 3-1986; Am. Ord. 12-1990; Am. Ord. 47-1990; Am. Ord. 69-1990; Am. Ord. 4-1995; Am. Ord. 15-1999)

ONE STOP SHOP
CITY OF ALBUQUERQUE PLANNING DEPARTMENT
Development & Building Services

PAID RECEIPT

APPLICANT NAME CURB, INC

AGENT Bohannan Huston

ADDRESS 7500 Jefferson NE

PROJECT & APP # 1003429/05DRB 00090

PROJECT NAME Sierra Ranch

$ 20.00 **441032/3424000 Conflict Management Fee**

$ 385.00 **441006/4983000 DRB Actions**

$ _____ **441006/4971000 EPC/AA/LUCC Actions & All Appeals**

$ _____ **441018/4971000 Public Notification**

$ _____ **441006/4983000 DRAINAGE PLAN REVIEW OR TRAFFIC IMPACT STUDY*****
( )Major/Minor Subdivision ( )Site Development Plan ( )Bldg Permit
( ) Letter of Map Revision ( )Conditional Letter of Map Revision
( ) Traffic Impact Study

$ 405.00 **TOTAL AMOUNT DUE**

City Of Albuquerque
Treasury Division
1/18/2005 11:42AM LOC: ANNX
RECEIPT# 00033888 WS# 006 TRANS# 0020
Account 441006 Fund 0110
Activity 3424000 TRSEJA
Trans Amt $20.00
J24 Misc
CK $405.00
CHANGE $0.00
Thank You

NOTE: If a subsequent submittal is required, bring a copy of this paid receipt with you to avoid an

Bohannan Huston INC.

COURTYARD I, 7500 JEFFERSON STREET NE
ALBUQUERQUE, NM 87109-4335
505.823.1000

BANK OF AMERICA
ALBUQUERQUE, NEW MEXICO
95-32 / 1070

133045

1/17/2005

City Of Albuquerque
Treasury Division
405
PAY 1/18/2005 11:42AM LOC: ANNX
RECEIPT# 00033887 WS# 006 TRANS# 0020
Account 441032 Fund 0110
Activity 3424000 TRSEJA
Trans Amt $405.00
J24 Misc $20.00
Thank You

TO THE ORDER OF
CITY OF ALBUQUERQUE
PO Box 1313
Albuquerque, NM 87103-1313 US

DOLLARS & **00** CENTS

City Of Albuquerque
Treasury Division
405.00
1/18/2005 11:42AM LOC: ANNX
RECEIPT# 00033887 WS# 006 TRANS# 0020
Account 441032 Fund 0110
Activity 3424000 TRSEJA
Trans Amt $405.00
J24 Misc $20.00
Thank You

BOHANNAN-HUSTON INC.
AUTHORIZED SIGNATURE

AUTHORIZED SIGNATURE

NO. 133045

⑈133045⑈ ⑆107000327⑆ 00286539940⑈

CITY OF ALBUQUERQUE
PLANNING DEPARTMENT
January 26, 2005
DRB Comments

ITEM # 3

PROJECT # 1003429 **APPLICATION # 05-00090**

RE: SIERRA RANCH/SPS

The signature block is not the correct one. Additional language is required.

Under Design Requirements, two comments:

- Walls…minimum of 7 courses from top of footing?
- Garage doors colors to match house, not trim, to blend into the home…not become the focal point.

Final Plat Condition: Plat must have the signature of the HOA President.

Wall elevations of the corner lots with rear yards abutting front yards are needed for the lots so affected. Identification of the lot is needed on the elevation.

Sheran Matson, AICP DRB Chair
924-3880 Fax 924-3864 smatson@cabq.gov

Current DRC
Project No. _____

Date Submitted. January 20, 2005

Date Site Plan Approved: _____

Date Preliminary Plat Approved: _____

Date Preliminary Plat Expires. _____

Figure 12

INFRASTRUCTURE LIST

EXHIBIT "A"
TO SUBDIVISION IMPROVEMENTS AGREEMENT
DEVELOPMENT REVIEW BOARD (D.R.B.) REQUIRED INFRASTRUCTURE LIST

DRB Project No. 1003429

SIERRA RANCH SUBDIVISION
PRELIMINARY PLAT

APPLICATION NO. 04DRB-01950

Following is a summary of PUBLIC/PRIVATE Infrastructure required to be constructed or financially guaranteed for the above development. This Listing is not necessarily a complete listing During the SIA process and/or in the review of the construction drawings, if the DRC Chair determines that appurtenant items and/or unforeseen items have not been included in the infrastructure listing, the DRC Chair may include those items in the listing and related financial guarantee. Likewise, if the DRC Chair determines that appurtenant or non-essential items can be deleted from the listing, those items may be deleted as well as the related portions of the financial guarantees. All such revisions require approval by the DRC Chair, the User Department and agent/owner If such approvals are obtained, these revisions to the listing will be incorporated administratively In addition, any unforeseen items which arise during construction which are necessary to complete the project and which normally are the Subdivider's responsibility will be required as a condition of project acceptance and close out by the City.

SIA Sequence #	COA DRC Project #	Size	Type of Improvement	Location	From	To	Private Inspector	City Inspector	City Cnst Engineer
SIERRA RANCH SUBDIVISION - UNIT I									
			ONSITE PUBLIC ROADWAY IMPROVEMENTS						
		30' EOA-F	ARTERIAL PAVING W/ PCC CURB & GUTTER, MEDIAN CURB AND PCC 6' WIDE SIDEWALK ON SOUTH SIDE ONLY	GIBSON BOULEVARD	CHACO CANYON DR	MESSINA DRIVE	/	/	/
		24' EOA-F	RESIDENTIAL PAVING W/ PCC CURB & GUTTER AND PCC 6' WIDE SIDEWALK ON WEST SIDE ONLY	MESSINA DRIVE	GIBSON BOULEVARD	AMOLE MESA AVENUE	/	/	/
		24' EOA-F	RESIDENTIAL PAVING W/ PCC CURB & GUTTER AND PCC 6' WIDE SIDEWALK ON NORTH SIDE ONLY	AMOLE MESA AVE	LOT 207	MESSINA DRIVE	/	/	/
		28' F-F	RESIDENTIAL PAVING W/ PCC CURB & GUTTER AND PCC 4' WIDE SIDEWALK ON BOTH SIDES*	FOUR MILE ROAD	LOTS 42/43	BISON SPRINGS STREET	/	/	/
		24' F-F	RESIDENTIAL PAVING W/ PCC CURB & GUTTER AND PCC 4' WIDE SIDEWALK ON NORTH SIDE ONLY*	FOUR MILE ROAD	BISON SPRINGS STREET	EAST STUB TERMINUS	/	/	/
		28' F-F	RESIDENTIAL PAVING W/ PCC CURB & GUTTER AND PCC 4' WIDE SIDEWALK ON BOTH SIDES*	CORONA RANCH RD	LOTS 76/77	BISON SPRINGS STREET	/	/	/
		28' F-F	RESIDENTIAL PAVING W/ PCC CURB & GUTTER AND PCC 4' WIDE SIDEWALK ON BOTH SIDES*	WALNUT CANYON RD	LOTS 109/110	BISON SPRINGS STREET	/	/	/
		48' F-F	RESIDENTIAL PAVING W/ PCC CURB & GUTTER AND PCC 6' WIDE SIDEWALK ON BOTH SIDES*	WALNUT CANYON RD	BISON SPRINGS STREET	MESSINA DRIVE	/	/	/
		28' F-F	RESIDENTIAL PAVING W/ PCC CURB & GUTTER AND PCC 4' WIDE SIDEWALK ON BOTH SIDES*	BUCK ISLAND ROAD	LOTS 148/149	BISON SPRINGS STREET	/	/	/

SIA Sequence #	COA DRC Project #	Size	Type of Improvement	Location	From	To	Private Inspector	City Inspector	City Cnst Engineer
			ONSITE PUBLIC ROADWAY IMPROVEMENTS (CONT.)						
		28' F-F	RESIDENTIAL PAVING W/ PCC CURB & GUTTER AND PCC 4' WIDE SIDEWALK ON BOTH SIDES*	PIPESTONE ROAD	LOTS 188/207	BIG SPRINGS ROAD	/	/	/
		36' F-F	RESIDENTIAL PAVING W/ PCC CURB & GUTTER AND PCC 4' WIDE SIDEWALK ON BOTH SIDES*	BIG SPRINGS ROAD	AMOLE MESA AVE	BISON SPRINGS STREET	/	/	/
		48' F-F	RESIDENTIAL PAVING W/ PCC CURB & GUTTER AND PCC 6' WIDE SIDEWALK ON BOTH SIDES*	CHACO CANYON DR	GIBSON BOULEVARD	FOUR MILE ROAD	/	/	/
		28' F-F	RESIDENTIAL PAVING W/ PCC CURB & GUTTER AND PCC 4' WIDE SIDEWALK ON BOTH SIDES*	SALADO CREEK ST	FOUR MILE ROAD	WALNUT CANYON ROAD	/	/	/
		28' F-F	RESIDENTIAL PAVING W/ PCC CURB & GUTTER AND PCC 4' WIDE SIDEWALK ON BOTH SIDES*	CARIZZO PLAIN DR	WALNUT CANYON RD	BUCK ISLAND ROAD	/	/	/
		28' F-F	RESIDENTIAL PAVING W/ PCC CURB & GUTTER AND PCC 4' WIDE SIDEWALK ON BOTH SIDES*	BISON SPRINGS ST	FOUR MILE ROAD	SOUTH STUB TERMINUS	/	/	/
		28' F-F	RESIDENTIAL PAVING W/ PCC CURB & GUTTER AND PCC 4' WIDE SIDEWALK ON EAST SIDE ONLY*	GILA CLIFF DRIVE	NORTH STUB TERMINUS	PIPESTONE ROAD	/	/	/
		25' WIDE	6' AC TRAIL	PEDESTRIAN ACCESS BETWEEN LOTS 206/207	PIPESTONE ROAD	AMOLE MESA AVENUE	/	/	/
							/	/	/

* SIDEWALKS TO BE DEFERRED PER DEFERRAL EXHIBIT 'B'.
WAIVER OF SIDEWALK ON SOUTH SIDE OF FOUR MILE ROAD STUB AND WEST SIDE OF GILA CLIFF DRIVE

STREET LIGHTS AS PER COA DPM

SIA Sequence #	COA DRC Project #	Size	Type of Improvement	Location	From	To	Private Inspector	City Inspector	City Cnst Engineer
SIERRA RANCH SUBDIVISION - UNIT I									
			ONSITE PUBLIC STORM DRAIN IMPROVEMENTS						
		18"-72" DIA	RCP W/ NEC. MH'S, LATERALS & INLETS	MESSINA DRIVE	GIBSON BLVD	AMOLE MESA AVENUE	/	/	/
		18" DIA	RCP W/ NEC. MH'S, LATERALS & INLETS	FOUR MILE ROAD	LOT 29	BISON SPRINGS STREET	/	/	/
		18"-24" DIA	RCP W/ NEC MH'S, LATERALS & INLETS	CORONA RANCH RD	LOTS 76/77	SALADO CREEK STREET	/	/	/
		24" DIA	RCP W/ NEC. MH'S, LATERALS & INLETS	SALADO CREEK ST.	CORONA RANCH RD.	WALNUT CANYON ROAD	/	/	/
		18" - 30" DIA	RCP W/ NEC MH'S, LATERALS & INLETS	WALNUT CANYON RD	LOTS 109/110	BISON SPRINGS STREET	/	/	/
		18" DIA	RCP W/ NEC. MH'S, LATERALS & INLETS	BUCK ISLAND ROAD	LOT 138	BISON SPRINGS STREET	/	/	/
		18" - 24" DIA	RCP W/ NEC. MH'S, LATERALS & INLETS	PIPESTONE ROAD	LOTS 188/207	BIG SPRINGS ROAD	/	/	/
		24" DIA	RCP W/ NEC. MH'S, LATERALS & INLETS	BIG SPRINGS ROAD	PIPESTONE ROAD	BISON SPRINGS STREET	/	/	/
		18" - 36" DIA	RCP W/ NEC. MH'S, LATERALS & INLETS	BISON SPRINGS ST	FOUR MILE ROAD	SOUTH STUB TERMINUS	/	/	/
		42" DIA	RCP W/ NEC. MH'S, LATERALS & INLETS	PUBLIC EASEMENT	BISON SPRINGS ST	MESSINA DRIVE	/	/	/
		42" DIA	RCP W/ NEC. MH'S, LATERALS & INLETS	WALNUT CANYON RD.	BISON SPRINGS ST	MESSINA DRIVE	/	/	/
		54" DIA	RCP W/ NEC. MH'S, LATERALS & INLETS	OPEN RANGE AVE EL RANCHO GRANDE UNIT 15	MESSINA DRIVE	EXISTING STUB BLUE SKY STREET	/	/	/
			* THIS ITEM IS ON THE EL RANCHO GRANDE UNIT 15 INFRASTRUCTURE LIST DRB#1003030 AND SHOWN ON THE INFRASTRUCTURE PLANS, COA PROJECT #699388, WHICH HAS NOT GONE TO WORK ORDER						
		72" DIA	RCP W/ NEC MH'S, LATERALS & INLETS	OPEN RANGE AVE SUN GATE SUBDIVISION	BLUE SKY STREET	BLAKE ROAD	/	/	/
			* THIS ITEM IS ON THE SUN GATE SUBDIVISION INFRASTRUCTURE LIST DRB#1003175, SHOWN ON THE INFRASTRUCTURE PLANS, COA PROJECT #736781, AND FINACIALLY GUARANTEED WITH THE SUN GATE FINAL PLAT. DEFERRED ITEM.						
		72" DIA	RCP W/ NEC. MH'S, LATERALS & INLETS	BLAKE ROAD	OPEN RANGE AVE	98TH STREET	/	/	/
			* THIS ITEM IS ON THE SUN GATE ESTATES SUBDIVISION INFRASTRUCTURE LIST DRB#1003591 SHOWN ON INFRASTRUCTURE PLANS, COA PROJECT #722783.						
		72-90" DIA	RCP W/ NEC. MH'S, LATERALS & INLETS	BLAKE ROAD	98TH STREET	AMOLE ARROYO	/	/	/
			* SHOWN ON INFRASTRUCTURE PLANS, COA PROJECT #722783, WHICH HAS NOT GONE TO WORK ORDER.						

SIA Sequence #	COA DRC Project #	Size	Type of Improvement	Location	From	To	Private Inspector	City Inspector	City Cnst Engineer

SIERRA RANCH SUBDIVISION - UNIT I

ONSITE PUBLIC STORM DRAIN IMPROVEMENTS (CONT'D)

			4.2 ACRE-FEET SURGE POND WITH PUBLIC EASEMENT AND COVENANT AND AGREEMENT	PARK TRACT			/	/	/
			3.5 ACRE-FEET TEMPORARY RETENTION POND WITH PUBLIC EASEMENT AND COVENANT AND AGREEMENT	TRACT 16-D EL RANCHO GRANDE			/	/	/
			2.6 ACRE-FEET TEMPORARY RETENTION POND WITH PUBLIC EASEMENT AND COVENANT AND AGREEMENT	SIERRA RANCH UNIT 2			/	/	/

NOTES: A GRADING AND DRAINAGE CERTIFICATION OF THE APPROVED GRADING PLAN IS REQUIRED PRIOR TO THE RELEASE OF FINANCIAL GUARANTEES.

THERE WILL BE NO RELEASE OF FINANCIAL GUARANTEE OR SIA UNTIL AGREEMENT IS PROCESSED AND APPROVED WITH AMAFCA FOR CONSTRUCTION OF THE AMOLE ARROYO IMPROVEMENTS

SIA Sequence #	COA DRC Project #	Size	Type of Improvement	Location	From	To	Private Inspector	City Inspector	City Cnst Engineer
SIERRA RANCH SUBDIVISION - UNIT I									
			ONSITE PUBLIC WATERLINE IMPROVEMENTS						
		18" DIA	WATERLINE W/ NEC. VALVES FH'S, MJ'S & RJ'S	CHACO CANYON DR	GIBSON BLVD	FOUR MILE ROAD	/	/	/
		4-8" DIA	WATERLINE W/ NEC. VALVES FH'S, MJ'S & RJ'S	FOUR MILE ROAD	LOTS 42/43	EAST STUB TERMINUS	/	/	/
		6" DIA	WATERLINE W/ NEC. VALVES FH'S, MJ'S & RJ'S	CORONA RANCH RD	LOTS 76/77	BISON SPRINGS ST	/	/	/
		6" DIA	WATERLINE W/ NEC VALVES FH'S, MJ'S & RJ'S	WALNUT CANYON RD	LOTS 109/110	BISON SPRINGS ST	/	/	/
		6" DIA	WATERLINE W/ NEC VALVES FH'S, MJ'S & RJ'S	BUCK ISLAND ROAD	LOTS 148/149	BISON SPRINGS ST	/	/	/
		6" DIA	WATERLINE W/ NEC. VALVES FH'S, MJ'S & RJ'S	PIPESTONE ROAD	LOTS 188/207	BIG SPRINGS RD	/	/	/
		6-8" DIA	WATERLINE W/ NEC. VALVES FH'S, MJ'S & RJ'S	BIG SPRINGS ROAD	AMOLE MESA AVE	BISON SPRINGS ST	/	/	/
		4-6" DIA	WATERLINE W/ NEC VALVES FH'S, MJ'S & RJ'S	BISON SPRINGS ST	FOUR MILE ROAD	SOUTH STUB TERMINUS	/	/	/
		4" DIA	WATERLINE W/ NEC. VALVES FH'S, MJ'S & RJ'S	GILA CLIFF DRIVE	NORTH STUB TERMINUS	PIPESTONE ROAD	/	/	/
		12" DIA	WATERLINE W/ NEC. VALVES FH'S, MJ'S & RJ'S	AMOLE MESA AVE	LOT 207	MESSINA DRIVE	/	/	/
		12" DIA	WATERLINE W/ NEC. VALVES FH'S, MJ'S & RJ'S	AMOLE MESA AVE	MESSINA DRIVE	MESA ARENOSA	/	/	/
		NOTE:	WATER METER FOR LANDSCAPING IN THE PUBLIC RIGHT-OF-WAY						

SIA Sequence #	COA DRC Project #	Size	Type of Improvement	Location	From	To	Private Inspector	City Inspector	City Cnst Engineer
SIERRA RANCH SUBDIVISION - UNIT I									
			ONSITE PUBLIC SANITARY SEWER IMPROVEMENTS						
		8" DIA	SANITARY SEWER W/ NEC. MH'S & SERVICES	FOUR MILE ROAD	LOTS 42/43	EAST STUB TERMINUS	/	/	/
		8" DIA	SANITARY SEWER W/ NEC. MH'S & SERVICES	CORONA RANCH RD	LOTS 76/77	BISON SPRINGS ST	/	/	/
		8" DIA	SANITARY SEWER W/ NEC. MH'S & SERVICES	WALNUT CANYON RD	LOTS 109/110	BISON SPRINGS ST	/	/	/
		8" DIA	SANITARY SEWER W/ NEC. MH'S & SERVICES	BUCK ISLAND ROAD	LOTS 148/149	BISON SPRINGS ST	/	/	/
		8" DIA	SANITARY SEWER W/ NEC. MH'S & SERVICES	PIPESTONE ROAD	LOTS 188/207	BIG SPRINGS RD	/	/	/
		8" DIA	SANITARY SEWER W/ NEC. MH'S & SERVICES	BIG SPRINGS ROAD	PIPESTONE ROAD	BISON SPRINGS ST	/	/	/
		8" DIA	SANITARY SEWER W/ NEC. MH'S & SERVICES	GILA CLIFF DRIVE	NORTH STUB TERMINUS	PIPESTONE ROAD	/	/	/
		8" DIA	SANITARY SEWER W/ NEC. MH'S & SERVICES	BISON SPRINGS ST	FOUR MILE ROAD	SOUTH STUB TERMINUS	/	/	/
		10" DIA	SANITARY SEWER W/ NEC. MH'S & SERVICES	PUBLIC EASEMENT	BISON SPRINGS ST	MESSINA DRIVE	/	/	/
		10" DIA	SANITARY SEWER W/ NEC. MH'S & SERVICES	MESSINA DRIVE	PUBLIC EASEMENT	AMOLE MESA AVENUE	/	/	/
		10" DIA	SANITARY SEWER W/ NEC. MH'S & SERVICES	AMOLE MESA AVE	MESSINA DRIVE	PUBLIC EASEMENT IN EL RANCHO GRANDE UNIT 15	/	/	/
		8-10" DIA	SANITARY SEWER W/ NEC. MH'S & SERVICES	PUBLIC EASEMENT IN EL RANCHO GRANDE UNIT 15	AMOLE MESA AVENUE	FUTURE OPEN RANGE AVE EXISTING STUB	/	/	/

SIA Sequence #	COA DRC Project #	Size	Type of Improvement	Location	From	To	Private Inspector	City Inspector	City Cnst Engineer
SIERRA RANCH SUBDIVISION - UNIT 2				NOTE: ALL UNIT 1 PUBLIC IMPROVEMENTS REQUIRED FOR UNIT 2.					
			ONSITE PUBLIC ROADWAY IMPROVEMENTS						
		30' EOA-F	ARTERIAL PAVING W/ PCC CURB & GUTTER, MEDIAN CURB AND PCC 6' WIDE SIDEWALK ON SOUTH SIDE ONLY	GIBSON BOULEVARD	LOT 247	CHACO CANYON DR	/	/	/
		24' EOA-F	RESIDENTIAL PAVING W/ PCC CURB & GUTTER AND PCC 6' WIDE SIDEWALK ON NORTH SIDE ONLY	AMOLE MESA AVE	LOT 229	LOT 208	/	/	/
		28' F-F	RESIDENTIAL PAVING W/ PCC CURB & GUTTER AND PCC 4' WIDE SIDEWALK ON BOTH SIDES*	FOUR MILE ROAD	PIPESPRING STREET	LOTS 261/262	/	/	/
		28' F-F	RESIDENTIAL PAVING W/ PCC CURB & GUTTER AND PCC 4' WIDE SIDEWALK ON BOTH SIDES*	CORONA RANCH RD	PIPESPRING STREET	LOTS 291/292	/	/	/
		28' F-F	RESIDENTIAL PAVING W/ PCC CURB & GUTTER AND PCC 4' WIDE SIDEWALK ON BOTH SIDES*	WALNUT CANYON RD	PIPESPRING STREET	LOTS 328/329	/	/	/
		24' F-F	RESIDENTIAL PAVING W/ PCC CURB & GUTTER AND PCC 4' WIDE SIDEWALK ON NORTH SIDE ONLY*	BUCK ISLAND ROAD	WEST STUB TERMINUS	ALAMO CANYON DRIVE	/	/	/
		28' F-F	RESIDENTIAL PAVING W/ PCC CURB & GUTTER AND PCC 4' WIDE SIDEWALK ON BOTH SIDES*	BUCK ISLAND ROAD	ALAMO CANYON DR	LOTS 352/353	/	/	/
		28' F-F	RESIDENTIAL PAVING W/ PCC CURB & GUTTER AND PCC 4' WIDE SIDEWALK ON BOTH SIDES*	PIPESTONE ROAD	PIPESPRING STREET	LOTS 208/356	/	/	/
		28' F-F	RESIDENTIAL PAVING W/ PCC CURB & GUTTER AND PCC 4' WIDE SIDEWALK ON BOTH SIDES*	PIPESPRING STREET	FOUR MILE ROAD	PIPESTONE ROAD	/	/	/
		28' F-F	RESIDENTIAL PAVING W/ PCC CURB & GUTTER AND PCC 4' WIDE SIDEWALK ON BOTH SIDES*	DEVILS TOWER ST	WALNUT CANYON RD	PIPESTONE ROAD	/	/	/
		48' F-F	RESIDENTIAL PAVING W/ PCC CURB & GUTTER AND PCC 6' WIDE SIDEWALK ON BOTH SIDES*	ALAMO CANYON DR	PIPESTONE ROAD	AMOLE MESA AVENUE	/	/	/
		28' F-F	RESIDENTIAL PAVING W/ PCC CURB & GUTTER AND PCC 4' WIDE SIDEWALK ON BOTH SIDES*	ALAMO CANYON DR	BUCK ISLAND ROAD	PIPESTONE ROAD	/	/	/
		28' F-F	RESIDENTIAL PAVING W/ PCC CURB & GUTTER AND PCC 4' WIDE SIDEWALK ON BOTH SIDES*	FOSTER RANCH ST	FOUR MILE ROAD	WALNUT CANYON ROAD	/	/	/
		28' F-F	RESIDENTIAL PAVING W/ PCC CURB & GUTTER AND PCC 4' WIDE SIDEWALK ON BOTH SIDES*	MOUNTAINTOP DR	BUCK ISLAND ROAD	PIPESTONE ROAD	/	/	/
			* SIDEWALKS TO BE DEFERRED PER DEFERRAL EXHIBIT 'B'. WAIVER OF SIDEWALK ON SOUTH SIDE OF BUCK ISLAND ROAD STUB				/	/	/
			STREET LIGHTS AS PER COA DPM						

SIA Sequence #	COA DRC Project #	Size	Type of Improvement	Location	From	To	Private Inspector	City Inspector	City Cnst Engineer
SIERRA RANCH SUBDIVISION - UNIT 2									
			ONSITE PUBLIC STORM DRAIN IMPROVEMENTS						
		18"-24" DIA	RCP W/ NEC. MH'S, LATERALS & INLETS	PUBLIC EASEMENT LOT 244	WEST BOUNDARY	PIPESPRING STREET	/	/	/
		18"-24" DIA	RCP W/ NEC. MH'S, LATERALS & INLETS	PIPESPRING STREET	PUBLIC EASEMENT	CORONA RANCH ROAD	/	/	/
		18"-24" DIA	RCP W/ NEC. MH'S, LATERALS & INLETS	CORONA RANCH RD	PIPESPRING STREET	LOTS 291/292	/	/	/
			OFFSITE DRAINAGE OPTION #1 PERMANENT SOUTH POWERLINE CHANNEL IMPROVEMENTS	200' PNM EASEMENT	GIBSON BLVD	POND #2 - ANDERSON HTS APPROVED GRADING PLAN	/	/	/
			OFFSITE DRAINAGE OPTION #2 1 6 ACRE-FEET TEMPORARY RETENTION POND WITH PUBLIC EASEMENT AND COVENANT AND AGREEMENT	150' AMAFCA DRAINAGE EASEMENT			/	/	/
			1.0 ACRE-FEET TEMPORARY RETENTION POND WITH PUBLIC EASEMENT AND COVENANT AND AGREEMENT	150' AMAFCA DRAINAGE EASEMENT			/	/	/

NOTES: A GRADING AND DRAINAGE CERTIFICATION OF THE APPROVED GRADING PLAN IS REQUIRED PRIOR TO THE RELEASE OF FINANCIAL GUARANTEES.

THERE WILL BE NO RELEASE OF FINANCIAL GUARANTEE OR SIA UNTIL AGREEMENT IS PROCESSED AND APPROVED WITH AMAFCA FOR CONSTRUCTION OF THE AMOLE ARROYO IMPROVEMENTS.

SIA Sequence #	COA DRC Project #	Size	Type of Improvement	Location	From	To	Private Inspector	City Inspector	City Cnst Engineer
SIERRA RANCH SUBDIVISION - UNIT 2									
			ONSITE PUBLIC WATERLINE IMPROVEMENTS						
		8" DIA	WATERLINE W/ NEC. VALVES FH'S, MJ'S & RJ'S	FOUR MILE ROAD	PIPESPRING STREET	LOTS 261/262	/	/	/
		6" DIA	WATERLINE W/ NEC VALVES FH'S, MJ'S & RJ'S	CORONA RANCH RD	PIPESPRING STREET	LOTS 291/292	/	/	/
		6" DIA	WATERLINE W/ NEC. VALVES FH'S, MJ'S & RJ'S	WALNUT CANYON RD	PIPESPRING STREET	LOTS 328/329	/	/	/
		4-6" DIA	WATERLINE W/ NEC VALVES FH'S, MJ'S & RJ'S	BUCK ISLAND ROAD	WEST STUB TERMINUS	LOTS 352/353	/	/	/
		6-8" DIA	WATERLINE W/ NEC. VALVES FH'S, MJ'S & RJ'S	PIPESTONE ROAD	PIPESPRING STREET	LOTS 208/356	/	/	/
		8" DIA	WATERLINE W/ NEC VALVES FH'S, MJ'S & RJ'S	PIPESPRING STREET	FOUR MILE ROAD	PIPESTONE ROAD	/	/	/
		6" DIA	WATERLINE W/ NEC. VALVES FH'S, MJ'S & RJ'S	DEVILS TOWER ST	WALNUT CANYON RD	PIPESTONE ROAD	/	/	/
		6" DIA	WATERLINE W/ NEC VALVES FH'S, MJ'S & RJ'S	MOUNTAINTOP DR	BUCK ISLAND ROAD	PIPESTONE ROAD	/	/	/
		20" DIA	WATERLINE W/ NEC. VALVES FH'S, MJ'S & RJ'S	PUBLIC EASEMENT IN EL RANCHO GRANDE UNIT 16	DELGADO	GIBSON BLVD. AT CHACO CANYON DRIVE	/	/	/
		18" DIA	WATERLINE W/ NEC. VALVES FH'S, MJ'S & RJ'S	FOUR MILE ROAD	FOSTER RANCH ST.	LOTS 261/262	/	/	/
		18" DIA	WATERLINE W/ NEC. VALVES FH'S, MJ'S & RJ'S	FOSTER RANCH ST.	FOUR MILE ROAD	WALNUT CANYON ROAD	/	/	/
		18" DIA	WATERLINE W/ NEC. VALVES FH'S, MJ'S & RJ'S	WALNUT CANYON RD	DEVILS TOWER ST.	FOSTER RANCH ST.	/	/	/
		18" DIA	WATERLINE W/ NEC. VALVES FH'S, MJ'S & RJ'S	DEVILS TOWER ST	WALNUT CANYON RD.	PIPESTONE ROAD	/	/	/
		18" DIA	WATERLINE W/ NEC VALVES FH'S, MJ'S & RJ'S	PIPESTONE ROAD	DEVILS TOWER ST.	ALAMO CANYON DRIVE	/	/	/
		18" DIA	WATERLINE W/ NEC VALVES FH'S, MJ'S & RJ'S	ALAMO CANYON DR.	PIPESTONE ROAD	AMOLE MESA AVENUE	/	/	/
		12-18" DIA	WATERLINE W/ NEC. VALVES FH'S, MJ'S & RJ'S	AMOLE MESA AVE	LOTS 229	LOT 208	/	/	/
		NOTE:	WATER METER FOR LANDSCAPING IN THE PUBLIC RIGHT-OF-WAY						

SIA Sequence #	COA DRC Project #	Size	Type of Improvement	Location	From	To	Private Inspector	City Inspector	City Cnst Engineer
			ONSITE PUBLIC SANITARY SEWER IMPROVEMENTS						
		8" DIA	SANITARY SEWER W/ NEC. MH'S & SERVICES	FOUR MILE ROAD	PIPESPRING STREET	LOTS 261/262	/	/	/
		8" DIA	SANITARY SEWER W/ NEC. MH'S & SERVICES	CORONA RANCH RD	PIPESPRING STREET	LOTS 291/292	/	/	/
		8" DIA	SANITARY SEWER W/ NEC MH'S & SERVICES	WALNUT CANYON RD	PIPESPRING STREET	LOTS 328/329	/	/	/
		8" DIA	SANITARY SEWER W/ NEC. MH'S & SERVICES	BUCK ISLAND ROAD	WEST STUB TERMINUS	LOTS 352/353	/	/	/
		8" DIA	SANITARY SEWER W/ NEC. MH'S & SERVICES	PIPESTONE ROAD	PIPESPRING STREET	LOTS 208/356	/	/	/
		8" DIA	SANITARY SEWER W/ NEC. MH'S & SERVICES	PIPESPRING STREET	FOUR MILE ROAD	PIPESTONE ROAD	/	/	/
		8" DIA	SANITARY SEWER W/ NEC MH'S & SERVICES	DEVILS TOWER ST	WALNUT CANYON RD	PIPESTONE ROAD	/	/	/
		8" DIA	SANITARY SEWER W/ NEC. MH'S & SERVICES	MOUNTAINTOP DR	BUCK ISLAND ROAD	PIPESTONE ROAD	/	/	/
		8" DIA	SANITARY SEWER W/ NEC. MH'S & SERVICES	PUBLIC EASEMENT LOT 224	WEST BOUNDARY	PIPESPRING STREET	/	/	/

NOTES. 1 LANDSCAPE MAINTENANCE AGREEMENT FOR LANDSCAPING IN THE PUBLIC RIGHT-OF-WAY
2 PERIMETER WALLS PER DRB APPROVED PERIMETER WALL DESIGN
3 WALL AND LANDSCAPING CERTIFICATION FROM REGISTERED ENGINEER AND/OR REGISTERED LANDSCAPE ARCHITECT REQUIRED PRIOR TO RELEASE OF FINANCIAL GUARANTEES.

SCOTT STEFFEN — 01/20/05
PREPARED BY: PRINT NAME — DATE

BOHANNAN HUSTON INC.
FIRM:

Scott Steffen — 1/20/05
SIGNATURE — DATE

MAXIMUM TIME ALLOW TO CONSTRUCT IMPROVEMENTS WITHOUT A DRB EXTENSION

DRB CHAIR — DATE
TRANSPORTATION DEVELOPMENT — DATE
UTILITY DEVELOPMENT — DATE
NEW MEXICO UTILITIES INC. — DATE
PARKS & RECREATION DEPARTMENT — DATE
AMAFCA — DATE
CITY ENGINEER — DATE
DATE

DESIGN REVIEW COMMITTEE REVISIONS

REVISION	DATE	DRC CHAIR	USER DEPARTMENT	AGENT/OWNER

DRB # 1003429

Zone Boundary Exhibit

Subdivision Name: Sierra Ranch Subdivision

Zone Atlas Page: N-8

Nearest Intersection: Gibson Blvd. and Messina Drive

January, 2004

Approved:_____

P:\050188\cdp\general\Exhibits\zoning boundary.dwg
January 20, 2005 - 3:31pm

ONE STOP SHOP
CITY OF ALBUQUERQUE PLANNING DEPARTMENT
Development & Building Services

PAID RECEIPT

APPLICANT NAME Curb Inc

AGENT Bohannan Huston

ADDRESS 7500 Jefferson NE

PROJECT & APP # 1003429

PROJECT NAME Sierra Ranch

DEFERRED PORTION

$ _____ 441032/3424000 Conflict Management Fee

$ 110.00 441006/4983000 DRB Actions Deferral fee

$ _____ 441006/4971000 EPC/AA/LUCC Actions & All Appeals

$ _____ 441018/4971000 Public Notification

$ _____ 441006/4983000 DRAINAGE PLAN REVIEW OR TRAFFIC IMPACT
( )Major/Minor Subdivision ( )Site Development Plan ( )
( ) Letter of Map Revision ( )Conditional Letter of Map Re
( ) Traffic Impact Study

$ 110.00 TOTAL AMOUNT DUE

Bohannan Huston Inc.

COURTYARD I, 7500 JEFFERSON STREET NE
ALBUQUERQUE, NM 87109-4335
505.823.1000

BANK OF AMERICA
ALBUQUERQUE, NEW MEXICO
95-32 / 1070

133040

1/17/2005

NO. 133040

PAY **********110 DOLLARS & **********00 CENTS

DUPLICATE110.00**

City Of Albuquerque
Treasury Division
BOHANNAN-HUSTON INC.

TO THE ORDER OF
CITY OF ALBUQUERQUE
PO Box 1313
Albuquerque, NM 87103-1313 US

1/18/2005 11:40AM LOC: ANNX
RECEIPT# 00033886 WS# 006 TRANS# 0019
Account 441006 Fund 0110
Activity 498300
Trans Amt $110.00
124 Misc $110.00
CR $110.00
CHANGE $0.00

AUTHORIZED SIGNATURE

TRSEJA

AUTHORIZED SIGNATURE

Thank You

⑈133040⑈ ⑆107000327⑆ 00286539940⑈

Bohannan Huston Inc.

Courtyard I
7500 Jefferson St. NE
Albuquerque, NM
87109-4335

www.bhinc.com

voice: 505.823.1000
facsimile: 505.798.7988
toll free: 800.877.5332

SENT VIA FAX

January 6, 2005

Sheran Matson, Chair
Development Review Board
City of Albuquerque
P.O. Box 1293
Albuquerque, New Mexico 87103

Re: Request for Deferral
Sierra Ranch Subdivision, DRB Project #1003429

Dear Sheran:

We request a two week deferral of the referenced application scheduled for the Development Review Board hearing on January 12, 2005. The deferral is requested because the 15-day appeal period for the bulk land plat that created Tracts 16-B and 16-C, El Rancho Grande ends on January 20, 2005. Tracts 16-B and 16-C, El Rancho Grande, are Units 1 and 2 of the Sierra Ranch Subdivision, respectively. Based on this request, we anticipate a DRB hearing on January 26, 2005.

If you have any questions or require further information, please call me at 823-1000.

Sincerely,

Scott J. Steffen, P.E.
Project Manager
Community Development and Planning Group

cc: Bo Johnson, Curb Inc.

P \050188\cdp\corres\Letters\050188 DRB deferral ltr1 doc

* * * COMMUNICATION RESULT REPORT (JAN. 6. 2005 11:07AM) * * *

TTI BOHANNAN HUSTON

FILE	MODE	OPTION	ADDRESS (GROUP)	RESULT	PAGE
369	MEMORY TX		99243864	OK	P. 2/2
			98751723	OK	P. 2/2

REASON FOR ERROR
E-1) HANG UP OR LINE FAIL
E-2) BUSY
E-3) NO ANSWER
E-4) NO FACSIMILE CONNECTION

Bohannan ▲ Huston

Courtyard I
7500 Jefferson St. NE
Albuquerque, NM
87109-4335

www.bhinc.com

voice: 505.823.1000
facsimile: 505.798.7988
toll free: 800.877.5332

FACSIMILE TRANSMITTAL COVER SHEET

Date: January 6, 2005

To: Sheran Matson, Planning Manager/DRB Chairperson

Company: City of Albuquerque

Fax No.: 924-3864

Cc: Bo Johnson, Curb Inc, fax 875-1723

From: Scott Steffen

Project No: 05 0188

Project Name: Sierra Ranch Subdivision

Number of Pages (including Cover): 2

Bohannan ▲ Huston INC.

Courtyard I
7500 Jefferson St. NE
Albuquerque, NM
87109-4335
www.bhinc.com
voice: 505.823.1000
facsimile: 505.798.7988
toll free: 800.877.5332

FACSIMILE TRANSMITTAL COVER SHEET

Date: January 6, 2005

To: Sheran Matson, Planning Manager/DRB Chairperson

Company: City of Albuquerque

Fax No.: 924-3864

Cc: Bo Johnson, Curb Inc, fax 875-1723

From: Scott Steffen

Project No: 05 0188

Project Name: Sierra Ranch Subdivision

Number of Pages (including Cover): 2

Re: Letter dated 1/6/05 re: Request for Deferral - Sierra Ranch Subd
DRB Project #1003429

Comments:

Original to Follow: ✓ **Yes - BY MAIL**

If you do not receive all pages, please contact Anna at 823-1000.

Current DRC Project No. _____

Date Submitted: December 16, 2004

Date Site Plan Approved: _____

Date Preliminary Plat Approved. _____

Date Preliminary Plat Expires: _____

Figure 12

INFRASTRUCTURE LIST

EXHIBIT "A"
TO SUBDIVISION IMPROVEMENTS AGREEMENT
DEVELOPMENT REVIEW BOARD (D.R.B.) REQUIRED INFRASTRUCTURE LIST

DRB Project No. 1003429

SIERRA RANCH SUBDIVISION
PRELIMINARY PLAT

APPLICATION NO.

Following is a summary of PUBLIC/PRIVATE Infrastructure required to be constructed or financially guaranteed for the above development. This Listing is not necessarily a complete listing. During the SIA process and/or in the review of the construction drawings, if the DRC Chair determines that appurtenant items and/or unforeseen items have not been included in the infrastructure listing, the DRC Chair may include those items in the listing and related financial guarantee. Likewise, if the DRC Chair determines that appurtenant or non-essential items can be deleted from the listing, those items may be deleted as well as the related portions of the financial guarantees. All such revisions require approval by the DRC Chair, the User Department and agent/owner. If such approvals are obtained, these revisions to the listing will be incorporated administratively. In addition, any unforeseen items which arise during construction which are necessary to complete the project and which normally are the Subdivider's responsibility will be required as a condition of project acceptance and close out by the City.

SIA Sequence #	COA DRC Project #	Size	Type of Improvement	Location	From	To	Private Inspector	City Inspector	City Cnst Engineer
SIERRA RANCH SUBDIVISION - UNIT I									
			ONSITE PUBLIC ROADWAY IMPROVEMENTS						
		30' EOA-F	ARTERIAL PAVING W/ PCC CURB & GUTTER AND PCC 6' WIDE SIDEWALK ON SOUTH SIDE ONLY	GIBSON BOULEVARD	CHACO CANYON DR	MESSINA DRIVE	/	/	/
		24' EOA-F	RESIDENTIAL PAVING W/ PCC CURB & GUTTER AND PCC 4' WIDE SIDEWALK ON WEST SIDE ONLY	MESSINA DRIVE	GIBSON BOULEVARD	AMOLE MESA AVENUE	/	/	/
		24' EOA-F	RESIDENTIAL PAVING W/ PCC CURB & GUTTER AND PCC 4' WIDE SIDEWALK ON NORTH SIDE ONLY	AMOLE MESA AVE	WEST BOUNDARY	MESSINA DRIVE	/	/	/
		28' F-F	RESIDENTIAL PAVING W/ PCC CURB & GUTTER AND PCC 4' WIDE SIDEWALK ON BOTH SIDES*	FOUR MILE ROAD	WEST BOUNDARY	BISON SPRINGS STREET	/	/	/
		24' F-F	RESIDENTIAL PAVING W/ PCC CURB & GUTTER AND PCC 4' WIDE SIDEWALK ON NORTH SIDE ONLY*	FOUR MILE ROAD	BISON SPRINGS STREET	EAST STUB TERMINUS	/	/	/
		28' F-F	RESIDENTIAL PAVING W/ PCC CURB & GUTTER AND PCC 4' WIDE SIDEWALK ON BOTH SIDES*	CORONA RANCH RD	WEST BOUNDARY	BISON SPRINGS STREET	/	/	/
		28' F-F	RESIDENTIAL PAVING W/ PCC CURB & GUTTER AND PCC 4' WIDE SIDEWALK ON BOTH SIDES*	WALNUT CANYON RD	WEST BOUNDARY	BISON SPRINGS STREET	/	/	/
		52' F-F	RESIDENTIAL PAVING W/ PCC CURB & GUTTER AND PCC 4' WIDE SIDEWALK ON BOTH SIDES*	WALNUT CANYON RD	BISON SPRINGS STREET	MESSINA DRIVE	/	/	/
		28' F-F	RESIDENTIAL PAVING W/ PCC CURB & GUTTER AND PCC 4' WIDE SIDEWALK ON BOTH SIDES*	BUCK ISLAND ROAD	WEST BOUNDARY	BISON SPRINGS STREET	/	/	/

SIA Sequence #	COA DRC Project #	Size	Type of Improvement	Location	From	To	Private Inspector	City Inspector	City Cnst Engineer
			ONSITE PUBLIC ROADWAY IMPROVEMENTS (CONT.)						
		28' F-F	RESIDENTIAL PAVING W/ PCC CURB & GUTTER AND PCC 4' WIDE SIDEWALK ON BOTH SIDES*	PIPESTONE ROAD	WEST BOUNDARY	BIG SPRINGS ROAD	/	/	/
		36' F-F	RESIDENTIAL PAVING W/ PCC CURB & GUTTER AND PCC 4' WIDE SIDEWALK ON BOTH SIDES*	BIG SPRINGS ROAD	AMOLE MESA AVE	BISON SPRINGS STREET	/	/	/
		48' F-F	RESIDENTIAL PAVING W/ PCC CURB & GUTTER AND PCC 4' WIDE SIDEWALK ON BOTH SIDES*	CHACO CANYON DR	GIBSON BOULEVARD	FOUR MILE ROAD	/	/	/
		28' F-F	RESIDENTIAL PAVING W/ PCC CURB & GUTTER AND PCC 4' WIDE SIDEWALK ON BOTH SIDES*	SALADO CREEK ST	FOUR MILE ROAD	WALNUT CANYON ROAD	/	/	/
		28' F-F	RESIDENTIAL PAVING W/ PCC CURB & GUTTER AND PCC 4' WIDE SIDEWALK ON BOTH SIDES*	CARIZZO PLAIN DR	WALNUT CANYON RD	BUCK ISLAND ROAD	/	/	/
		28' F-F	RESIDENTIAL PAVING W/ PCC CURB & GUTTER AND PCC 4' WIDE SIDEWALK ON BOTH SIDES*	BISON SPRINGS ST	FOUR MILE ROAD	SOUTH STUB TERMINUS	/	/	/
		28' F-F	RESIDENTIAL PAVING W/ PCC CURB & GUTTER AND PCC 4' WIDE SIDEWALK ON EAST SIDE ONLY*	GILA CLIFF DRIVE	NORTH STUB TERMINUS	PIPESTONE ROAD	/	/	/
		25' WIDE	6' AC TRAIL	PEDESTRIAN ACCESS BETWEEN LOTS 206/207	PIPESTONE ROAD	AMOLE MESA AVENUE	/	/	/
							/	/	/

* SIDEWALKS TO BE DEFERRED PER DEFERRAL EXHIBIT 'B'.
WAIVER OF SIDEWALK ON SOUTH SIDE OF FOUR MILE ROAD STUB AND WEST SIDE OF GILA CLIFF DRIVE

STREET LIGHTS AS PER COA DPM

SIA Sequence #	COA DRC Project #	Size	Type of Improvement	Location	From	To	Private Inspector	City Inspector	City Cnst Engineer
SIERRA RANCH SUBDIVISION - UNIT I									
			ONSITE PUBLIC STORM DRAIN IMPROVEMENTS						
		18"-72" DIA	RCP W/ NEC. MH'S, LATERALS & INLETS	MESSINA DRIVE	GIBSON BLVD	AMOLE MESA AVENUE	/	/	/
		18" DIA	RCP W/ NEC. MH'S, LATERALS & INLETS	FOUR MILE ROAD	LOT 29	BISON SPRINGS STREET	/	/	/
		18"-24" DIA	RCP W/ NEC. MH'S, LATERALS & INLETS	CORONA RANCH RD	WEST BOUNDARY	SALADO CREEK STREET	/	/	/
		24" DIA	RCP W/ NEC. MH'S, LATERALS & INLETS	SALADO CREEK ST.	CORONA RANCH RD.	WALNUT CANYON ROAD	/	/	/
		18" - 30" DIA	RCP W/ NEC. MH'S, LATERALS & INLETS	WALNUT CANYON RD	WEST BOUNDARY	BISON SPRINGS STREET	/	/	/
		18" DIA	RCP W/ NEC MH'S, LATERALS & INLETS	BUCK ISLAND ROAD	LOT 138	BISON SPRINGS STREET	/	/	/
		18" - 24" DIA	RCP W/ NEC. MH'S, LATERALS & INLETS	PIPESTONE ROAD	WEST BOUNDARY	BIG SPRINGS ROAD	/	/	/
		24" DIA	RCP W/ NEC. MH'S, LATERALS & INLETS	BIG SPRINGS ROAD	PIPESTONE ROAD	BISON SPRINGS STREET	/	/	/
		18" - 36" DIA	RCP W/ NEC. MH'S, LATERALS & INLETS	BISON SPRINGS ST	FOUR MILE ROAD	SOUTH STUB TERMINUS	/	/	/
		42" DIA	RCP W/ NEC. MH'S, LATERALS & INLETS	PUBLIC EASEMENT	BISON SPRINGS ST	MESSINA DRIVE	/	/	/
		42" DIA	RCP W/ NEC. MH'S, LATERALS & INLETS	WALNUT CANYON RD.	BISON SPRINGS ST	MESSINA DRIVE	/	/	/
			4.2 ACRE-FEET SURGE POND WITH PUBLIC EASEMENT AND COVENANT AND AGREEMENT	PARK TRACT			/	/	/
			3.5 ACRE-FEET TEMPORARY RETENTION POND WITH PUBLIC EASEMENT AND COVENANT AND AGREEMENT	EL RANCHO GRANDE TRACT 16 NORTH			/	/	/
			2.6 ACRE-FEET TEMPORARY RETENTION POND WITH PUBLIC EASEMENT AND COVENANT AND AGREEMENT	SIERRA RANCH UNIT 2			/	/	/

NOTE: A GRADING AND DRAINAGE CERTIFICATION OF THE APPROVED GRADING PLAN IS REQUIRED PRIOR TO THE RELEASE OF FINANCIAL GUARANTEES.

THERE WILL BE NO RELEASE OF FINANCIAL GUARANTEE OR SIA UNTIL AGREEMENT IS PROCESSED AND APPROVED WITH AMAFCA FOR CONSTRUCTION OF THE AMOLE ARROYO IMPROVEMENTS.

SIA Sequence #	COA DRC Project #	Size	Type of Improvement	Location	From	To	Private Inspector	City Inspector	City Cnst Engineer
SIERRA RANCH SUBDIVISION - UNIT I									
			ONSITE PUBLIC WATERLINE IMPROVEMENTS						
		18" DIA	WATERLINE W/ NEC. VALVES FH'S, MJ'S & RJ'S	CHACO CANYON DR	GIBSON BLVD	FOUR MILE ROAD	/	/	/
		4-8" DIA	WATERLINE W/ NEC. VALVES FH'S, MJ'S & RJ'S	FOUR MILE ROAD	WEST BOUNDARY	EAST STUB TERMINUS	/	/	/
		6" DIA	WATERLINE W/ NEC. VALVES FH'S, MJ'S & RJ'S	CORONA RANCH RD	WEST BOUNDARY	BISON SPRINGS ST	/	/	/
		6" DIA	WATERLINE W/ NEC. VALVES FH'S, MJ'S & RJ'S	WALNUT CANYON RD	WEST BOUNDARY	BISON SPRINGS ST	/	/	/
		6" DIA	WATERLINE W/ NEC. VALVES FH'S, MJ'S & RJ'S	BUCK ISLAND ROAD	WEST BOUNDARY	BISON SPRINGS ST	/	/	/
		6" DIA	WATERLINE W/ NEC. VALVES FH'S, MJ'S & RJ'S	PIPESTONE ROAD	WEST BOUNDARY	BIG SPRINGS RD	/	/	/
		6-8" DIA	WATERLINE W/ NEC. VALVES FH'S, MJ'S & RJ'S	BIG SPRINGS ROAD	AMOLE MESA AVE	BISON SPRINGS ST	/	/	/
		4-6" DIA	WATERLINE W/ NEC. VALVES FH'S, MJ'S & RJ'S	BISON SPRINGS ST	FOUR MILE ROAD	SOUTH STUB TERMINUS	/	/	/
		4" DIA	WATERLINE W/ NEC. VALVES FH'S, MJ'S & RJ'S	GILA CLIFF DRIVE	NORTH STUB TERMINUS	PIPESTONE ROAD	/	/	/
		12" DIA	WATERLINE W/ NEC VALVES FH'S, MJ'S & RJ'S	AMOLE MESA AVE	WEST BOUNDARY	MESSINA DRIVE	/	/	/
		12" DIA	WATERLINE W/ NEC. VALVES FH'S, MJ'S & RJ'S	AMOLE MESA AVE	MESSINA DRIVE	MESA ARENOSA	/	/	/

SIA Sequence #	COA DRC Project #	Size	Type of Improvement	Location	From	To	Private Inspector	City Inspector	City Cnst Engineer
SIERRA RANCH SUBDIVISION - UNIT I									
			ONSITE PUBLIC SANITARY SEWER IMPROVEMENTS						
		8" DIA	SANITARY SEWER W/ NEC. MH'S & SERVICES	FOUR MILE ROAD	WEST BOUNDARY	EAST STUB TERMINUS	/	/	/
		8" DIA	SANITARY SEWER W/ NEC. MH'S & SERVICES	CORONA RANCH RD	WEST BOUNDARY	BISON SPRINGS ST	/	/	/
		8" DIA	SANITARY SEWER W/ NEC. MH'S & SERVICES	WALNUT CANYON RD	WEST BOUNDARY	BISON SPRINGS ST	/	/	/
		8" DIA	SANITARY SEWER W/ NEC. MH'S & SERVICES	BUCK ISLAND ROAD	WEST BOUNDARY	BISON SPRINGS ST	/	/	/
		8" DIA	SANITARY SEWER W/ NEC. MH'S & SERVICES	PIPESTONE ROAD	WEST BOUNDARY	BIG SPRINGS RD	/	/	/
		8" DIA	SANITARY SEWER W/ NEC. MH'S & SERVICES	BIG SPRINGS ROAD	PIPESTONE ROAD	BISON SPRINGS ST	/	/	/
		8" DIA	SANITARY SEWER W/ NEC. MH'S & SERVICES	GILA CLIFF DRIVE	NORTH STUB TERMINUS	PIPESTONE ROAD	/	/	/
		8" DIA	SANITARY SEWER W/ NEC. MH'S & SERVICES	BISON SPRINGS ST	FOUR MILE ROAD	SOUTH STUB TERMINUS	/	/	/
		10" DIA	SANITARY SEWER W/ NEC MH'S & SERVICES	PUBLIC EASEMENT	BISON SPRINGS ST	MESSINA DRIVE	/	/	/
		10" DIA	SANITARY SEWER W/ NEC. MH'S & SERVICES	MESSINA DRIVE	PUBLIC EASEMENT	AMOLE MESA AVENUE	/	/	/
		10" DIA	SANITARY SEWER W/ NEC. MH'S & SERVICES	AMOLE MESA AVE.	MESSINA DRIVE	PUBLIC EASEMENT IN EL RANCHO GRANDE UNIT 15	/	/	/
		8-10" DIA	SANITARY SEWER W/ NEC. MH'S & SERVICES	PUBLIC EASEMENT IN EL RANCHO GRANDE UNIT 15	AMOLE MESA AVENUE	FUTURE OPEN RANGE AVE. EXISTING STUB	/	/	/

SIA Sequence #	COA DRC Project #	Size	Type of Improvement	Location	From	To	Private Inspector	City Inspector	City Cnst Engineer
SIERRA RANCH SUBDIVISION - UNIT 2				NOTE: ALL UNIT 1 PUBLIC IMPROVEMENTS REQUIRED FOR UNIT 2.					
			ONSITE PUBLIC ROADWAY IMPROVEMENTS						
		30' EOA-F	ARTERIAL PAVING W/ PCC CURB & GUTTER AND PCC 6' WIDE SIDEWALK ON SOUTH SIDE ONLY	GIBSON BOULEVARD	WEST BOUNDARY	CHACO CANYON DR	/	/	/
		24' EOA-F	RESIDENTIAL PAVING W/ PCC CURB & GUTTER AND PCC 4' WIDE SIDEWALK ON NORTH SIDE ONLY	AMOLE MESA AVE	WEST BOUNDARY	EAST BOUNDARY	/	/	/
		28' F-F	RESIDENTIAL PAVING W/ PCC CURB & GUTTER AND PCC 4' WIDE SIDEWALK ON BOTH SIDES*	FOUR MILE ROAD	PIPESPRING STREET	EAST BOUNDARY	/	/	/
		28' F-F	RESIDENTIAL PAVING W/ PCC CURB & GUTTER AND PCC 4' WIDE SIDEWALK ON BOTH SIDES*	CORONA RANCH RD	PIPESPRING STREET	EAST BOUNDARY	/	/	/
		28' F-F	RESIDENTIAL PAVING W/ PCC CURB & GUTTER AND PCC 4' WIDE SIDEWALK ON BOTH SIDES*	WALNUT CANYON RD	PIPESPRING STREET	EAST BOUNDARY	/	/	/
		24' F-F	RESIDENTIAL PAVING W/ PCC CURB & GUTTER AND PCC 4' WIDE SIDEWALK ON NORTH SIDE ONLY*	BUCK ISLAND ROAD	WEST STUB TERMINUS	ALAMO CANYON DRIVE	/	/	/
		28' F-F	RESIDENTIAL PAVING W/ PCC CURB & GUTTER AND PCC 4' WIDE SIDEWALK ON BOTH SIDES*	BUCK ISLAND ROAD	ALAMO CANYON DR	EAST BOUNDARY	/	/	/
		28' F-F	RESIDENTIAL PAVING W/ PCC CURB & GUTTER AND PCC 4' WIDE SIDEWALK ON BOTH SIDES*	PIPESTONE ROAD	PIPESPRING STREET	EAST BOUNDARY	/	/	/
		28' F-F	RESIDENTIAL PAVING W/ PCC CURB & GUTTER AND PCC 4' WIDE SIDEWALK ON BOTH SIDES*	PIPESPRING STREET	FOUR MILE ROAD	PIPESTONE ROAD	/	/	/
		28' F-F	RESIDENTIAL PAVING W/ PCC CURB & GUTTER AND PCC 4' WIDE SIDEWALK ON BOTH SIDES*	DEVILS TOWER ST	WALNUT CANYON RD	PIPESTONE ROAD	/	/	/
		48' F-F	RESIDENTIAL PAVING W/ PCC CURB & GUTTER AND PCC 4' WIDE SIDEWALK ON BOTH SIDES*	ALAMO CANYON DR	PIPESTONE ROAD	AMOLE MESA AVENUE	/	/	/
		28' F-F	RESIDENTIAL PAVING W/ PCC CURB & GUTTER AND PCC 4' WIDE SIDEWALK ON BOTH SIDES*	ALAMO CANYON DR	BUCK ISLAND ROAD	PIPESTONE ROAD	/	/	/
		28' F-F	RESIDENTIAL PAVING W/ PCC CURB & GUTTER AND PCC 4' WIDE SIDEWALK ON BOTH SIDES*	FOSTER RANCH ST	FOUR MILE ROAD	WALNUT CANYON ROAD	/	/	/
		28' F-F	RESIDENTIAL PAVING W/ PCC CURB & GUTTER AND PCC 4' WIDE SIDEWALK ON BOTH SIDES*	MOUNTAINTOP DR	BUCK ISLAND ROAD	PIPESTONE ROAD	/	/	/
			* SIDEWALKS TO BE DEFERRED PER DEFERRAL EXHIBIT 'B'. WAIVER OF SIDEWALK ON SOUTH SIDE OF BUCK ISLAND ROAD STUB				/	/	/
			STREET LIGHTS AS PER COA DPM						

SIA Sequence #	COA DRC Project #	Size	Type of Improvement	Location	From	To	Private Inspector	City Inspector	City Cnst Engineer
SIERRA RANCH SUBDIVISION - UNIT 2									
			ONSITE PUBLIC STORM DRAIN IMPROVEMENTS						
		18"-24" DIA	RCP W/ NEC. MH'S, LATERALS & INLETS	PUBLIC EASEMENT	WEST BOUNDARY	PIPESPRING STREET	/	/	/
		18"-24" DIA	RCP W/ NEC. MH'S, LATERALS & INLETS	PIPESPRING STREET	PUBLIC EASEMENT	CORONA RANCH ROAD	/	/	/
		18"-24" DIA	RCP W/ NEC MH'S, LATERALS & INLETS	CORONA RANCH RD	PIPESPRING STREET	PHASE BOUNDARY	/	/	/
			1.6 ACRE-FEET TEMPORARY RETENTION POND WITH PUBLIC EASEMENT AND COVENANT AND AGREEMENT	150' AMAFCA DRAINAGE EASEMENT			/	/	/
			1 0 ACRE-FEET TEMPORARY RETENTION POND WITH PUBLIC EASEMENT AND COVENANT AND AGREEMENT	150' AMAFCA DRAINAGE EASEMENT			/	/	/

NOTE: A GRADING AND DRAINAGE CERTIFICATION OF THE APPROVED GRADING PLAN IS REQUIRED PRIOR TO THE RELEASE OF FINANCIAL GUARANTEES.

THERE WILL BE NO RELEASE OF FINANCIAL GUARANTEE OR SIA UNTIL AGREEMENT IS PROCESSED AND APPROVED WITH AMAFCA FOR CONSTRUCTION OF THE AMOLE ARROYO IMPROVEMENTS.

SIA Sequence #	COA DRC Project #	Size	Type of Improvement	Location	From	To	Private Inspector	City Inspector	City Cnst Engineer
SIERRA RANCH SUBDIVISION - UNIT 2									
			ONSITE PUBLIC WATERLINE IMPROVEMENTS						
		8" DIA	WATERLINE W/ NEC. VALVES FH'S, MJ'S & RJ'S	FOUR MILE ROAD	PIPESPRING STREET	EAST BOUNDARY	/	/	/
		6" DIA	WATERLINE W/ NEC. VALVES FH'S, MJ'S & RJ'S	CORONA RANCH RD	PIPESPRING STREET	EAST BOUNDARY	/	/	/
		6" DIA	WATERLINE W/ NEC. VALVES FH'S, MJ'S & RJ'S	WALNUT CANYON RD	PIPESPRING STREET	EAST BOUNDARY	/	/	/
		4-6" DIA	WATERLINE W/ NEC. VALVES FH'S, MJ'S & RJ'S	BUCK ISLAND ROAD	WEST STUB TERMINUS	EAST BOUNDARY	/	/	/
		6-8" DIA	WATERLINE W/ NEC. VALVES FH'S, MJ'S & RJ'S	PIPESTONE ROAD	PIPESPRING STREET	EAST BOUNDARY	/	/	/
		8" DIA	WATERLINE W/ NEC. VALVES FH'S, MJ'S & RJ'S	PIPESPRING STREET	FOUR MILE ROAD	PIPESTONE ROAD	/	/	/
		6" DIA	WATERLINE W/ NEC. VALVES FH'S, MJ'S & RJ'S	DEVILS TOWER ST	WALNUT CANYON RD	PIPESTONE ROAD	/	/	/
		6" DIA	WATERLINE W/ NEC. VALVES FH'S, MJ'S & RJ'S	MOUNTAINTOP DR	BUCK ISLAND ROAD	PIPESTONE ROAD	/	/	/
		20" DIA	WATERLINE W/ NEC. VALVES FH'S, MJ'S & RJ'S	PUBLIC EASEMENT IN EL RANCHO GRANDE UNIT 16	DELGADO	GIBSON BLVD. AT CHACO CANYON DRIVE	/	/	/
		18" DIA	WATERLINE W/ NEC. VALVES FH'S, MJ'S & RJ'S	FOUR MILE ROAD	FOSTER RANCH ST.	EAST BOUNDARY	/	/	/
		18" DIA	WATERLINE W/ NEC. VALVES FH'S, MJ'S & RJ'S	FOSTER RANCH ST.	FOUR MILE ROAD	WALNUT CANYON ROAD	/	/	/
		18" DIA	WATERLINE W/ NEC. VALVES FH'S, MJ'S & RJ'S	WALNUT CANYON RD.	DEVILS TOWER ST.	FOSTER RANCH ST.	/	/	/
		18" DIA	WATERLINE W/ NEC. VALVES FH'S, MJ'S & RJ'S	DEVILS TOWER ST.	WALNUT CANYON RD.	PIPESTONE ROAD	/	/	/
		18" DIA	WATERLINE W/ NEC. VALVES FH'S, MJ'S & RJ'S	PIPESTONE ROAD	DEVILS TOWER ST.	ALAMO CANYON DRIVE	/	/	/
		18" DIA	WATERLINE W/ NEC. VALVES FH'S, MJ'S & RJ'S	ALAMO CANYON DR.	PIPESTONE ROAD	AMOLE MESA AVENUE	/	/	/
		12-18" DIA	WATERLINE W/ NEC. VALVES FH'S, MJ'S & RJ'S	AMOLE MESA AVE	WEST BOUNDARY	EAST BOUNDARY	/	/	/

SIA Sequence #	COA DRC Project #	Size	Type of Improvement	Location	From	To	Private Inspector	City Inspector	City Cnst Engineer
			ONSITE PUBLIC SANITARY SEWER IMPROVEMENTS						
		8" DIA	SANITARY SEWER W/ NEC. MH'S & SERVICES	FOUR MILE ROAD	PIPESPRING STREET	EAST BOUNDARY	/	/	/
		8" DIA	SANITARY SEWER W/ NEC. MH'S & SERVICES	CORONA RANCH RD	PIPESPRING STREET	EAST BOUNDARY	/	/	/
		8" DIA	SANITARY SEWER W/ NEC. MH'S & SERVICES	WALNUT CANYON RD	PIPESPRING STREET	EAST BOUNDARY	/	/	/
		8" DIA	SANITARY SEWER W/ NEC. MH'S & SERVICES	BUCK ISLAND ROAD	WEST STUB TERMINUS	EAST BOUNDARY	/	/	/
		8" DIA	SANITARY SEWER W/ NEC MH'S & SERVICES	PIPESTONE ROAD	PIPESPRING STREET	EAST BOUNDARY	/	/	/
		8" DIA	SANITARY SEWER W/ NEC. MH'S & SERVICES	PIPESPRING STREET	FOUR MILE ROAD	PIPESTONE ROAD	/	/	/
		8" DIA	SANITARY SEWER W/ NEC. MH'S & SERVICES	DEVILS TOWER ST	WALNUT CANYON RD	PIPESTONE ROAD	/	/	/
		8" DIA	SANITARY SEWER W/ NEC. MH'S & SERVICES	MOUNTAINTOP DR	BUCK ISLAND ROAD	PIPESTONE ROAD	/	/	/
		8" DIA	SANITARY SEWER W/ NEC. MH'S & SERVICES	PUBLIC EASEMENT	WEST BOUNDARY	PIPESPRING STREET	/	/	/

SCOTT STEFFEN — 12/16/04
PREPARED BY: PRINT NAME — DATE

BOHANNAN HUSTON INC.
FIRM:

Scott Steffen — 12/16/04
SIGNATURE — DATE

MAXIMUM TIME ALLOW TO CONSTRUCT IMPROVEMENTS WITHOUT A DRB EXTENSION

DRB CHAIR	DATE	PARKS & RECREATION DEPARTMENT	DATE
TRANSPORTATION DEVELOPMENT	DATE	AMAFCA	DATE
UTILITY DEVELOPMENT	DATE	CITY ENGINEER	DATE
NEW MEXICO UTILITIES INC.	DATE		DATE

DESIGN REVIEW COMMITTEE REVISIONS

REVISION	DATE	DRC CHAIR	USER DEPARTMENT	AGENT/OWNER

City of Albuquerque

DEVELOPMENT PLAN REVIEW APPLICATION

	Supplemental form		Supplemental form
SUBDIVISION	**S**	**ZONING & PLANNING**	**Z**
☒ Major Subdivision action		☐ Annexation	
☐ Minor Subdivision action		☐ County Submittal	
☒ Vacation	**V**	☐ EPC Submittal	
☐ Variance (Non-Zoning)		☐ Zone Map Amendment (Establish or Change Zoning	
SITE DEVELOPMENT PLAN	**P**	☐ Sector Plan (Phase I, II, III)	
☐ ...for Subdivision Purposes		☐ Amendment to Sector, Area, Facility or Comprehensive Plan	
☐ ...for Building Permit		☐ Text Amendment	
☐ IP Master Development Plan			
☐ Cert. of Appropriateness (LUCC)	**L**	**APPEAL / PROTEST of...**	**A**
		☐ Decision by: DRB, EPC, LUCC, Planning Director or Staff, ZHE, Zoning Board of Appeals	

PRINT OR TYPE IN BLACK INK ONLY. The applicant or agent must submit the completed application in person to the Planning Department Development Services Center, 600 2nd Street NW, Albuquerque, NM 87102. Fees must be paid at the time of application. Refer to supplemental forms for submittal requirements.

APPLICANT INFORMATION:

NAME: CURB, INC. PHONE: 899-9656
ADDRESS: 5160 SAN FRANCISCO NE FAX: 875-1723
CITY: ALBUQUERQUE STATE NM ZIP87109 E-MAIL: ____
Proprietary interest in site: OWNER
AGENT (if any): BOHANNAN HUSTON INC. PHONE: 823-1000
ADDRESS: 7500 JEFFERSON NE FAX: 798-7988
CITY: ALBUQUERQUE STATE NM ZIP 87109 E-MAIL: ____

DESCRIPTION OF REQUEST: PRELIMINARY PLAT APPROVAL, VACATION OF PUBLIC EASEMENTS AND RIGHT OF WAY, SIDEWALK WAIVER AND DEFERRAL.

Is the applicant seeking incentives pursuant to the Family Housing Development Program? ☐ Yes. ☒ No.

SITE INFORMATION: ACCURACY OF THE LEGAL DESCRIPTION IS CRUCIAL! ATTACH A SEPARATE SHEET IF NECESSARY.

Lot or Tract No. TRACT 16B, 16C EL RANCHO GRANDE Block: ____ Unit: ____

Subdiv. / Addn. SIERRA RANCH SUBDIVISION

Current Zoning: R-LT R-D Proposed zoning: ____

Zone Atlas page(s): N-8 No. of **existing** lots: 2 No. of **proposed** lots: 383

Total area of site (acres): 61.2 Density if applicable: dwellings per gross acre: ____ dwellings per net acre: ____

Within city limits? ☒ Yes. No ☐, but site is within 5 miles of the city limits (DRB jurisdiction.) Within 1000FT of a landfill? NO

UPC No. 100805446943510102 MRGCD Map No. ____

LOCATION OF PROPERTY BY STREETS: On or Near: GIBSON BLVD. SW
Between: ____ and ____

CASE HISTORY:

List **any** current or prior case number that may be relevant to your application (Proj., App., DRB-, AX_,Z_, V_, S_, etc.): DRB# 1003429

Check-off if project was previously reviewed by Sketch Plat/Plan ☐, or Pre-application Review Team ☐. Date of review: ____

SIGNATURE _____ DATE 12/16/04

(Print) SCOTT STEFFEN ☐ Applicant ☒ Agent

FOR OFFICIAL USE ONLY Form revised 10/03

☐ **INTERNAL ROUTING**
☐ All checklists are complete
☐ All fees have been collected
☐ All case #s are assigned
☐ AGIS copy has been sent
☐ Case history #s are listed
☐ Site is within 1000ft of a landfill
☐ F.H.D.P. density bonus
☐ F.H.D.P. fee rebate

Application case numbers		Action	S.F.	Fees
04DRB	-01950	PP	$(2)	$3500.00
04DRB	-01951	VRW	V	$ 300.00
04DRB	-01952	VPE	V	$ 21500
04DRB	-01953	SW	V	$ 0
04DRB	-01954	TDS	V	$ 50.00
		AD Fee		Total 7500
		CMF		$ 20.00
				$ 4270.00

Hearing date 1-12-05

12-17-04
Planner signature / date

Project # 1003429

El Rancho Grande

FORM S(2): SUBDIVISION - D.R.B. PUBLIC HEARING

A **Bulk Land Variance** requires application on FORM-V in addition to application for subdivision on FORM-S.

☒ **MAJOR SUBDIVISION PRELIMINARY PLAT APPROVAL**

__ Proposed Preliminary Plat including the Grading Plan (folded to fit into an 8.5" by 14" pocket) **24** copies
__ Proposed Infrastructure List
__ Design elevations & cross sections of perimeter walls **3 copies**
__ Zone Atlas map with the entire property(ies) precisely and clearly outlined and crosshatched (to be photocopied)
__ Letter briefly describing, explaining, and justifying the request
__ Property owner's and City Surveyor's signature on the proposed plat
__ FORM DRWS Drainage Report, Water & Sewer availability statement filing information
__ Office of Community & Neighborhood Coordination inquiry response, notifying letter, certified mail receipts
__ Sign Posting Agreement
N/A **Signed** Pre-Annexation Agreement if Annexation required.
__ TIS/AQIA Traffic Impact Study / Air Quality Impact Assessment form
__ Fee (see schedule)
__ Any original and/or related file numbers are listed on the cover application
Preliminary plat approval expires after one year.
DRB Public hearings are approximately ONE MONTH after the filing deadline. **Your attendance is required.**

☐ **MAJOR SUBDIVISION AMENDMENT TO PRELIMINARY PLAT (with significant changes)**
☐ **MAJOR SUBDIVISION AMENDMENT TO INFRASTRUCTURE LIST (with significant changes)**
☐ **MAJOR SUBDIVISION AMENDMENT TO GRADING PLAN (with significant changes)**
PLEASE NOTE: There are no clear distinctions between significant and minor changes with regard to subdivision amendments. Significant changes are those deemed by the DRB to require public notice and public hearing.
__ Proposed Amended Preliminary Plat, and/or Infrastructure List, and/or Grading Plan (folded to fit into an 8.5" by 14" pocket) **24** copies
__ Original Preliminary Plat, and/or Infrastructure List, and/or Grading Plan (folded to fit into an 8.5" by 14" pocket)
__ Zone Atlas map with the entire property(ies) precisely and clearly outlined and crosshatched (to be photocopied)
__ Letter briefly describing, explaining, and justifying the request
__ Property owner's and City Surveyor's signature on the proposed amended plat, if the preliminary plat is being amended
__ Office of Community & Neighborhood Coordination inquiry response, notifying letter, certified mail receipts
__ Sign Posting Agreement
__ Any original and/or related file numbers are listed on the cover application
Amended preliminary plat approval expires after one year.
DRB Public hearings are approximately ONE MONTH after the filing deadline. **Your attendance is required.**

☐ **MAJOR SUBDIVISION EXTENSION OF SUBDIVISION IMPROVEMENTS AGREEMENT**

(Temporary sidewalk deferral uses FORM-V)
__ **1** copy of each of the following items
__ Zone Atlas map with the entire property(ies) precisely and clearly outlined and crosshatched (to be photocopied)
__ Letter briefly describing, explaining, and justifying the request
__ Plat or plan reduced to 8.5" x 11"
__ Official D.R.B. Notice of the original approval
__ Approved Infrastructure List. If not applicable, please initial. _____
__ Previous SIA extension notice, if one has been issued. If not applicable, please initial. _____
__ Office of Community & Neighborhood Coordination inquiry response, notifying letter, certified mail receipts
__ Sign Posting Agreement
__ Any original and/or related file numbers are listed on the cover application
__ Fee (see schedule)

DRB Public hearings are approximately ONE MONTH after the filing deadline. Your attendance is required.

I, the applicant, acknowledge that any information required but not submitted with this application will likely result in deferral of actions.

Scott Steffen
Applicant name (print)

Scott J Steffen
Applicant signature / date 12/16/04

Form revised **11/04**

☐ Checklists complete
☐ Fees collected
☐ Case #s assigned
☐ Related #s listed

Application case numbers
04DRB 01950
____-____-____
____-____-____

12-17-04
Planner signature / date

Project # 1003429

El Rancho Grande

FORM V: SUBDIVISION VARIANCES & VACATIONS

☐ BULK LAND VARIANCE (PUBLIC HEARING CASE)

__ Application for subdivision (Plat) on FORM S-3, including those submittal requirements. **24 copies** of the plat are required. The Variance and subdivision should be applied for simultaneously.
__ Letter briefly describing and explaining: the request, compliance with criteria in the Development Process Manual, and any improvements to be waived.
__ Notice on the proposed Plat that there are conditions to subsequent subdivision (refer to DPM)
__ Office of Community & Neighborhood Coordination inquiry response, notifying letter, certified mail receipts
__ Sign Posting Agreement
__ Fee (see schedule) Fee is for Variance. Plat fee is listed on FORM-S.
__ Any original and/or related file numbers are listed on the cover application

DRB Public hearings are approximately ONE MONTH after the filing deadline. <u>Your attendance is required.</u>

☒ VACATION OF PUBLIC RIGHT-OF-WAY i
☒ VACATION OF PUBLIC EASEMENT 6

✓ The complete document which created the public easement (folded to fit into an 8.5" by 14" pocket) **24** copies. (Not required for dedicated and City owned public right-of-way.)
✓ Drawing showing the easement or right-of-way to be vacated, its relation to existing streets, etc. (folded to fit into an 8.5" by 14" pocket) **24** copies
✓ Zone Atlas map with the entire property(ies) precisely and clearly outlined and crosshatched (to be photocopied)
✓ Letter briefly describing, explaining, and justifying the request
✓ Office of Community & Neighborhood Coordination inquiry response, notifying letter, certified mail receipts
✓ Sign Posting Agreement
✓ Fee (see schedule)
✓ Any original and/or related file numbers are listed on the cover application

Unless the vacation is shown on a DRB approved plat recorded by the County Clerk within one year, it will expire.
DRB Public hearings are approximately ONE MONTH after the filing deadline. <u>Your attendance is required.</u>

☐ SUBDIVISION DESIGN VARIANCE (VARIANCE FROM MINIMUM STANDARDS OF THE DEVELOPMENT PROCESS MANUAL)
☐ SIDEWALK DESIGN VARIANCE
☒ SIDEWALK WAIVER

✓ Scale drawing showing the proposed variance or waiver (folded to fit into an 8.5" by 14" pocket) **6** copies for unadvertised meetings. These actions are not approved through internal routing.
✓ Zone Atlas map with the entire property(ies) precisely and clearly outlined and crosshatched (to be photocopied)
✓ Letter briefly describing, explaining, and justifying the variance or waiver
✓ Any original and/or related file numbers are listed on the cover application

DRB meetings are approximately 8 DAYS after the Tuesday noon filing deadline. <u>Your attendance is required.</u>

☒ TEMPORARY DEFERRAL OF SIDEWALK CONSTRUCTION
☐ EXTENSION OF THE SIA FOR TEMPORARY DEFERRAL OF SIDEWALK CONSTRUCTION

✓ Drawing showing the sidewalks subject to the proposed deferral or extension (folded to fit into an 8.5" by 14" pocket) **6** copies for unadvertised meetings. These actions are not approved through internal routing.
__ Zone Atlas map with the entire property(ies) precisely and clearly outlined and crosshatched (to be photocopied)
✓ Letter briefly describing, explaining, and justifying the deferral or extension
✓ Any original and/or related file numbers are listed on the cover application

DRB meetings are approximately 8 DAYS after the Tuesday noon filing deadline. <u>Your attendance is required.</u>

☐ VACATION OF PRIVATE EASEMENT

__ The complete document which created the private easement (folded to fit into an 8.5" by 14" pocket) **6** copies for unadvertised meetings. These actions are not approved through internal routing.
__ Scale drawing showing the easement to be vacated, its relation to existing streets, etc. (folded to fit into an 8.5" by 14" pocket) **6** copies
__ Zone Atlas map with the entire property(ies) precisely and clearly outlined and crosshatched (to be photocopied)
__ Letter briefly describing, explaining, and justifying the vacation
__ Letter of authorization from the grantors and the beneficiaries
__ Fee (see schedule)
__ Any original and/or related file numbers are listed on the cover application

Unless the vacation is shown on a DRB approved plat recorded by the County Clerk within one year, it will expire.
DRB meetings are approximately 8 DAYS after the Tuesday noon filing deadline. <u>Your attendance is required.</u>

I, the applicant, acknowledge that any information required but not submitted with this application will likely result in deferral of actions.

Scott Steffen
Applicant name (print)

12/16/04
Applicant signature / date

Form revised ~~4/03~~ and October 2003

☐ Checklists complete
☐ Fees collected
☐ Case #s assigned
☐ Related #s listed

Application case numbers
04DRB -01951
04DRB -01952
04DRB 01953
04DRB 01954

12-17-04
Planner signature / date

Project # 1003429

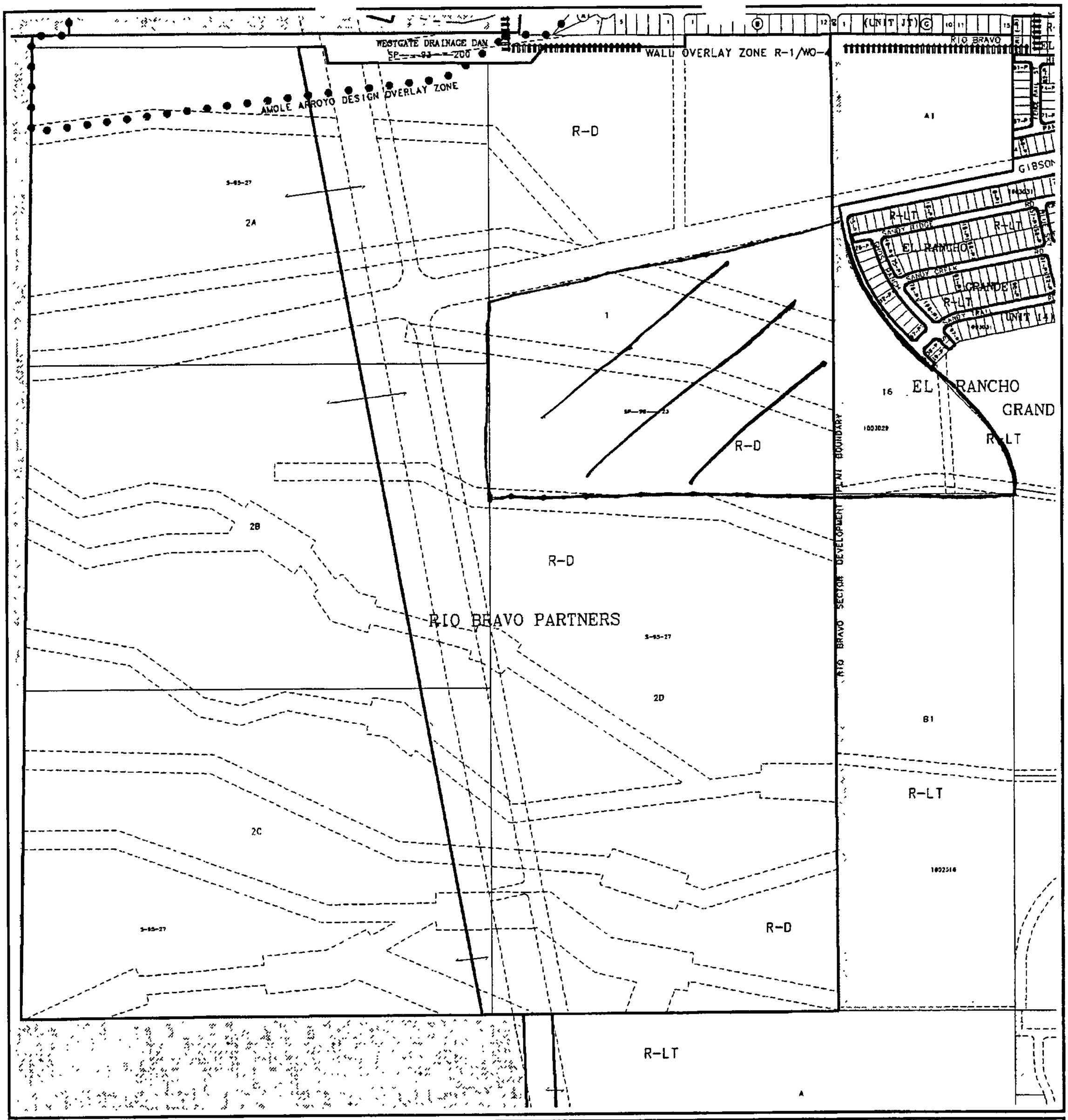

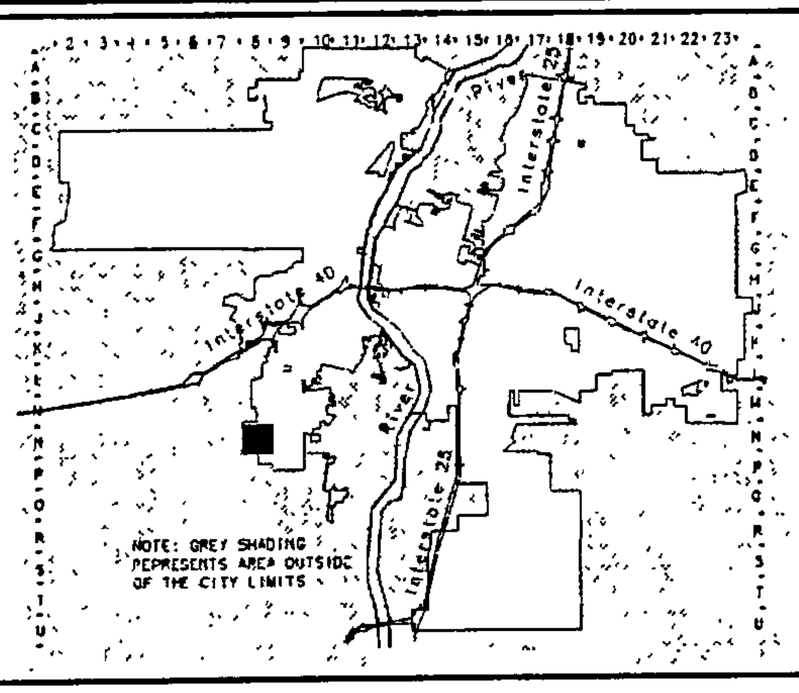

CITY OF ALBUQUERQUE · NEW MEXICO · 1706

Albuquerque Geographic Information System
PLANNING DEPARTMENT

©Copyright 2004

GRAPHIC SCALE IN FEET

250 0 750 1000

Zone Atlas Page

N-8-Z

Map Amended through December 03, 2004

CITY OF ALBUQUERQUE

TRAFFIC IMPACT STUDY (TIS) / ENVIRONMENTAL HEALTH INFORMATION FORM

TO BE COMPLETED BY APPLICANT

APPLICANT: Curb, Inc. **Date of request:** 12/17/04 **Zone atlas page(s):** N8

CURRENT:
Zoning R-LT R-D
Parcel Size (acres / sq.ft.) 14.2

Legal Description - Tract 116B, 116C
Lot or Tract # El Rancho Grande Block #
Subdivision Name Sierra Ranch

REQUESTED CITY ACTION(S):

Annexation	[ ]	Sector Plan	[ ]	Site Development Plan:	
Comp. Plan		Zone Change	[ ]	a) Subdivision	[ ]
Amendment	[ ]	Conditional Use	[ ]	b) Build'g Purposes	[ ]
				c) Amendment	[ ]

Building Permit [ ]
Access Permit [ ]
Other [ ]

PROPOSED DEVELOPMENT: **GENERAL DESCRIPTION OF ACTION:** [1]

No construction / development [ ]
New Construction [X] # of units - 383
Building Size - _____(sq. ft.)
Expansion of existing development [ ]

Notes: 1. Changes made to development proposals / assumptions, from the information provided above, may change the TIS or AQIA analysis requirements.

Applicant or Representative Stephanie Stratton Date 12-17-04
(To be signed upon completion of processing by Traffic Engineer and Environmental Health)

TRANSPORTATION DEVELOPMENT

TRAFFIC IMPACT STUDY (TIS) REQUIRED: YES [X] NO [ ] BORDERLINE [ ]
Planning Dept., Dev. & Bldg. Services Div., Transportation Dev. Section - 2nd FL. 600 2nd St. NW Plaza del Sol Bldg. 924-3994

THRESHOLDS MET? YES [X] NO [ ] Mitigating reasons for not requiring **TIS:** Previously studied: [ ]
Notes: MASTER PLAN STUDY UNDERWAY AND WILL BE ADDRESSED AT DRB.

IF A TIS IS REQUIRED: A scoping meeting (as outlined in the Development Process Manual) must be held to define the level of analysis needed and the parameters of the study. **Any subsequent changes to the development proposal identified above may require an update or new TIS.**

Tony Loyd 12-17-04
TRAFFIC ENGINEER DATE

ENVIRONMENTAL HEALTH

Per letter dated August 7, 2003 from the Director of the Environmental Health Department to the Director of the Planning Department, "all 5 CO monitors within Bernalillo County are yielding 8-hour average CO levels at less than 50% of the Federal CO standard ..." and "based on our review of the available scientific data, we do not foresee a circumstance where preparation of a detailed air quality study for a land use development will be warranted - regardless of the project size, location or traffic generated".

Required **TIS** **must be completed prior to applying to the EPC.** Arrangements must be made prior to submittal if a variance to this procedure is requested and noted on this form, otherwise the application may not be accepted or deferred if the arrangements are not complied with.

TIS - **SUBMITTED** ___/___/___ _____ _____
- **FINALIZED** ___/___/___ TRAFFIC ENGINEER DATE

Bohannan ▲ Huston Inc.

Courtyard I
7500 Jefferson St. NE
Albuquerque, NM
87109-4335

www.bhinc.com

voice: 505.823.1000
facsimile: 505.798.7988
toll free: 800 877.5332

December 16, 2004

Sheran Matson, Chair
Development Review Board
City of Albuquerque
P.O. Box 1293
Albuquerque, New Mexico 87103

Re: Preliminary Plat, Sidewalk Deferral and Waiver Approval, and Public/Private Easement and Public Right-of-Way Vacation Approval
Sierra Ranch Subdivision, DRB Project # 1003429

Dear Sheran:

We are requesting Preliminary Plat approval for the Sierra Ranch Subdivision. A Bulk Land Plat which will replat two existing tracts of land that underlie the proposed project has been submitted to the DRB for review and approval. The plat, titled "Bulk Land Plat Tracts 16-A, 16-B, 16-C, 16-D, and 16-E El Rancho Grande" was submitted by Aldrich Land Surveying to be heard at the January 5, 2005 DRB hearing. The Sierra Ranch Subdivision consists of two units. Unit 1 is a replat of Tract 16-B, El Rancho Grande, and Unit 2 is a replat of Tract 16-C, El Rancho Grande.

The subject property is located west of the El Rancho Grande Unit 14 and Unit 15 Subdivisions at the southwest corner of the Gibson Boulevard and Messina Drive intersection and contains approximately 61.0 acres. Current zoning is R-D and R-LT. In addition to the Preliminary Plat approval, we are requesting waiver and deferral of sidewalk (Exhibit B), and vacation of public easementS and public right-of-way (Exhibit C).

The proposed subdivision consists of 383 single-family residential lots, with a minimum dimension of 45 feet wide by 105 feet deep. Access to the site will be from Gibson Boulevard to the north, Messina Drive to the east, and Amole Mesa Avenue to the south. Water and sanitary sewer service will be per the Water/Sanitary Sewer Availability letter dated May 24, 2004. A grading drainage plan has been submitted to Hydrology Development for their review and approval.

Enclosed for Development Review Board (DRB) review and approval are copies of the following information:

- Applications for Development Review
- Twenty-four (24) copies each of the Preliminary Plat and Grading Plan
- Twenty-four (24) copies of the Infrastructure List (Exhibit "A")
- Six (6) copies of the Reason/Location of Request for Sidewalk Deferral and Waiver (Exhibit "B")
- Six (6) copies of the Reason/Location of Request for Private/Public Easement and Public Right-of-way Vacation (Exhibit "C")
- Letter from the Office of Neighborhood Coordination
- One (1) copy of the Perimeter Wall Detail
- Forms DR/WS and TIS, and
- Fee in the amount of $8140.00

Bohannan ^ Huston INC.

Courtyard I
7500 Jefferson St. NE
Albuquerque, NM
87109-4335

www.bhinc.com

voice: 505.823.1000
facsimile: 505.798.7988
toll free: 800.877.5332

Please place this item on the DRB Agenda to be heard January 12, 2005. If you have any questions or require further information, please call me at 823-1000.

Sincerely,

Scott Steffen, P.E.
Project Manager
Community Development and Planning Group

SS
Enclosure

P \050188\cdp\corres\Letters\050188 Preplat letter.doc

"Attachment A"

BOHANNAN^HUSTON, STEPHANIE
ZONE MAP: N-8

Westgate Heights NA (R)
***Matthew Archuleta**
1628 Summerfield SW/ 87121 836-7251 (h)
Libby McIntosh
1316 Ladrones Ct. SW/ 87121 831-5189 (h)

<u>ALTHOUGH YOU</u> <u>ARE NOT "OFFICIALLY REQUIRED"</u> BY O-92, you are most welcomed to notify the following *"Unrecognized"* neighborhood associations of this project.

LETTERS MUST BE SENT TO BOTH CONTACTS OF EACH NEIGHBORHOOD ASSOCIATION.

NOTICE TO APPLICANTS

SUGGESTED INFORMATION FOR NEIGHBORHOOD NOTIFICATION LETTERS

Applicants for Zone Change, Site Plan, Sector Development Plan approval or an amendment to a Sector Development Plan by the EPC, DRB, etc. are required under Council Bill O-92 to notify all affected recognized neighborhood associations ***PRIOR TO FILING THE APPLICATION TO THE PLANNING DEPARTMENT.*** Because the purpose of the notification is to ensure communication as a means of identifying and resolving problems early, it is essential that the notification be fully informative.

WE RECOMMEND THAT THE NOTIFICATION LETTER INCLUDE THE FOLLOWING INFORMATION:

1. The street address of the subject property.
2. The legal description of the property, including lot or tract number (if any), block number (if any), and name of the subdivision.
3. A physical description of the location, referenced to streets and existing land uses.
4. A complete description of the actions requested of the EPC:
   a) If a **ZONE CHANGE OR ANNEXATION**, the name of the existing zone category and primary uses and the name of the proposed category and primary uses (i.e., "from the R-T Townhouse zone, to the C-2 Community Commercial zone").
   b) If a **SITE DEVELOPMENT OR MASTER DEVELOPMENT PLAN** approval or amendment describe the physical nature of the proposal (i.e., "an amendment to the approved plan to allow a drive-through restaurant to be located just east of the main shopping center entrance off Montgomery Blvd.").
   c) If a **SECTOR DEVELOPMENT PLAN OR PLAN AMENDMENT** a general description of the plan area, plan concept, the mix of zoning and land use categories proposed and description of major features such as location of significant shopping centers, employment centers, parks and other public facilities.
5. The name, address and telephone number of the applicant and of the agent (if any). In particular the name of an individual contact person will be helpful so that neighborhood associations may contact someone with questions or comments.

****

(below this line for ONC use only)

Date of Inquiry: **12/15/04** Time Entered: **3:45PM** ONC Rep. Initials: **JK**

ALBUQUERQUE
Making History

City of Albuquerque

P.O. Box 1293, Albuquerque, NM 87103

PLEASE NOTE: The Neighborhood Association information listed in this letter is valid for one (1) month. If you haven't filed your application within one (1) month of the date of this letter – you will need to get an updated letter from our office. It is your responsibility to provide current information – outdated information may result in a deferral of your case.

December 15, 2004

Stephanie
Bohannan ^ Huston
7500 Jefferson St. NE / 87109
Phone: 823-1000 Fax: 798-7988

Dear Stephanie

Thank you for your inquiry of **December 15, 2004,** requesting the names of Recognized Neighborhood Associations who would be affected under the provisions of O-92 by your proposed project at **TRACT 16B, 16C SIERRA RANCH SUBDIVISION** zone map N-8

Our records indicate that the Recognized Neighborhood Association(s) affected by this proposal and the contact names are as follows:

SEE "ATTACHMENT A" FOR NEIGHBORHOOD INFORMATION.

Please note that according to O-92 you are required to notify each of these contact persons by **certified mail, return receipt requested, before** the Planning Department will accept your application filing. **IMPORTANT! Failure of adequate notification may result in your Application Hearing being deferred for 30 days.** If you have any questions about the information provided, please contact me at (505) 924-3914 or via an e-mail message at juliaking@cabq.gov or by fax at (505) 924-3913.

Sincerely,

Julia King

Julia King
Senior Office Assistant
OFFICE OF NEIGHBORHOOD COORDINATION
Planning Department

planningrnaform(10/27/04)

CERTIFIED MAIL

91 7108 2133 3931 2005 8109

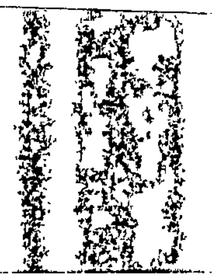

UNITED STATES POSTAGE
PITNEY BOWES
02 1P $ 004.65⁰
0002538536 DEC 17 2004
MAILED FROM ZIP CODE 87109

SENDER: *COMPLETE THIS SECTION*

- Complete items 1, 2, and 3. Also complete item 4 if Restricted Delivery is desired.
- Print your name and address on the reverse so that we can return the card to you.
- Attach this card to the back of the mailpiece, or on the front if space permits.

1. Article Addressed to:

Matthew Archuleta
1628 Summerfield SW
Albuquerque, NM 87121

COMPLETE THIS SECTION ON DELIVERY

A. Signature

X ☐ Agent ☐ Addressee

B. Received by *(Printed Name)* | C. Date of Delivery

D. Is delivery address different from item 1? ☐ Yes
If YES, enter delivery address below: ☐ No

3. Service Type
☑ Certified Mail ☐ Express Mail
☐ Registered ☑ Return Receipt for Merchandise
☐ Insured Mail ☐ C.O.D.

4. Restricted Delivery? *(Extra Fee)* ☐ Yes

2. Article Number
(Transfer from service label) 91 7108 2133 3931 2005 8109

PS Form 3811, August 2001 Domestic Return Receipt 102595-02-M-1540

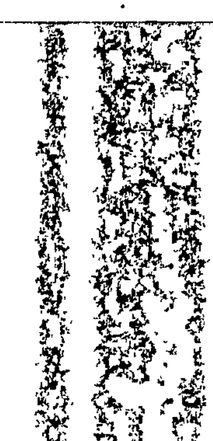

CERTIFIED MAIL

91 7108 2133 3931 2005 8116

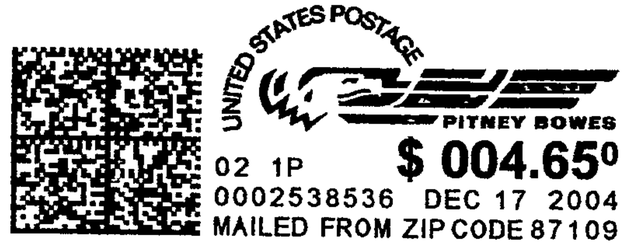

SENDER: *COMPLETE THIS SECTION*

- Complete items 1, 2, and 3. Also complete item 4 if Restricted Delivery is desired.
- Print your name and address on the reverse so that we can return the card to you.
- Attach this card to the back of the mailpiece, or on the front if space permits.

1. Article Addressed to:

Libby McIntosh
1316 Ladrones Ct. SW
Albuquerque, NM 87121

COMPLETE THIS SECTION ON DELIVERY

A. Signature

X ☐ Agent ☐ Addressee

B. Received by *(Printed Name)* | C. Date of Delivery

D. Is delivery address different from item 1? ☐ Yes
If YES, enter delivery address below: ☐ No

3. Service Type
☒ Certified Mail ☐ Express Mail
☐ Registered ☒ Return Receipt for Merchandise
☐ Insured Mail ☐ C.O.D.

4. Restricted Delivery? *(Extra Fee)* ☐ Yes

2. Article Number
(Transfer from service label) 91 7108 2133 3931 2005 8116

PS Form 3811, August 2001 Domestic Return Receipt 102595-02-M-1540

Bohannan Huston Inc.

Courtyard I
7500 Jefferson St. NE
Albuquerque, NM
87109-4335

www.bhinc.com

voice: 505.823.1000
facsimile: 505.798.7988
toll free: 800.877.5332

CERTIFIED MAIL/RETURN RECEIPT REQUESTED

December 16, 2004

Libby McIntosh
1316 Ladrones Ct. SW
Albuquerque, New Mexico 87121

RE: Preliminary Plat, Sidewalk Deferral and Waiver and Vacation of Public Easements and Public Right of Way
Tract 16B, 16C Sierra Ranch Subdivision

Dear Ms. McIntosh:

We have been informed by the City of Albuquerque's Office of Neighborhood Coordination that you are a representative of the Westgate Heights Neighborhood Association.

This letter is to advise you that Bohannan Huston, Inc., agent for Curb Inc., is seeking approval of Preliminary Plat, Sidewalk Deferral and Waiver and Vacation of Public Easements and Public Right of Way for Tract 16B, 16C Sierra Ranch Subdivision from the City of Albuquerque's Development Review Board (DRB).

Enclosed for your review and information is a copy of the zone atlas page with the site highlighted and a copy of the Preliminary plat that was submitted to the DRB. Please feel free to contact me if you have any questions regarding this matter or need information as to the date and time of the public hearing.

Sincerely,

for Stephanie Stratton

Scott Steffen, P.E.
Project Manager
Community Development and Planning Group

SS
Enclosure

P:\050188\cdp\corres\Neighborhood approval letter2.doc

ENGINEERING
SPATIAL DATA
ADVANCED TECHNOLOGIES

Bohannan Huston INC.

Courtyard I
7500 Jefferson St. NE
Albuquerque, NM
87109-4335

www.bhinc.com

voice: 505.823.1000
facsimile: 505.798.7988
toll free: 800.877.5332

CERTIFIED MAIL/RETURN RECEIPT REQUESTED

December 16, 2004

Matthew Archuleta
1628 Summerfield SW
Albuquerque, New Mexico 87121

RE: Preliminary Plat, Sidewalk Deferral and Waiver and Vacation of Public Easements and Public Right of Way
Tract 16B, 16C Sierra Ranch Subdivision

Dear Mr. Archuleta:

We have been informed by the City of Albuquerque's Office of Neighborhood Coordination that you are a representative of the Westgate Heights Neighborhood Association.

This letter is to advise you that Bohannan Huston, Inc., agent for Curb Inc., is seeking approval of Preliminary Plat, Sidewalk Deferral and Waiver and Vacation of Public Easements and Public Right of Way for Tract 16B, 16C Sierra Ranch Subdivision from the City of Albuquerque's Development Review Board (DRB).

Enclosed for your review and information is a copy of the zone atlas page with the site highlighted and a copy of the Preliminary plat that was submitted to the DRB. Please feel free to contact me if you have any questions regarding this matter or need information as to the date and time of the public hearing.

Sincerely,

for Stephanie Steffen

Scott Steffen, P.E.
Project Manager
Community Development and Planning Group

SS
Enclosure

P:\050188\cdp\corres\Neighborhood approval letter1.doc

PRINTED ON
SPATIAL DATA

SIGN POSTING AGREEMENT

REQUIREMENTS

POSTING SIGNS ANNOUNCING PUBLIC HEARINGS

All persons making application to the City under the requirements and procedures established by the City Zoning Code or Subdivision Ordinance are responsible for the posting and maintaining of one or more signs on the property which the application describes. Vacations of public rights-of-way (if the way has been in use) also require signs. Waterproof signs are provided at the time of application. If the application is mailed, you must still stop at the Development Services Front Counter to pick up the sign.

The applicant is responsible for ensuring that the signs remain posted throughout the 15-day period prior to public hearing. Failure to maintain the signs during this entire period may be cause for deferral or denial of the application. Replacement signs for those lost or damaged are available from the Development Services Front Counter at a charge of $3.50 each.

1. LOCATION

   A. The sign shall be conspicuously located. It shall be located within twenty feet of the public sidewalk (or edge of public street). Staff may indicate a specific location.
   B. The face of the sign shall be parallel to the street, and the bottom of the sign shall be at least two feet from the ground.
   C. No barrier shall prevent a person from coming within five feet of the sign to read it.

2. NUMBER

   A. One sign shall be posted on each paved street frontage. Signs may be required on unpaved street frontages.
   B. If the land does not abut a public street, then, in addition to a sign placed on the property, a sign shall be placed on and at the edge of the public right-of-way of the nearest paved City street. Such a sign must direct readers toward the subject property by an arrow and an indication of distance.

3. PHYSICAL POSTING

   A. A heavy stake with two crossbars or a full plywood backing works best to keep the sign in place, especially during high winds.
   B. Large headed nails or staples are best for attaching signs to a post or backing; the sign tears out less easily.

4. TIME

Signs must be posted from 12-28-04 To 1-12-05

5. REMOVAL

   A. The sign is not to be removed before the initial hearing on the request.
   B. The sign should be removed within five (5) days after the initial hearing.

I have read this sheet and discussed it with the Development Services Front Counter Staff. I understand (A) my obligation to keep the sign(s) posted for (15) days and (B) where the sign(s) are to be located. I am being given a copy of this sheet.

Stephanie Stratton — 12-17-04
(Applicant or Agent) (Date)

I issued 1 signs for this application, 12-17-04 (Date), [signature] (Staff Member)

DRB PROJECT NUMBER: 1003429

Rev. 5/9/03

ONE STOP SHOP
CITY OF ALBUQUERQUE PLANNING DEPARTMENT
Development & Building Services

PAID RECEIPT

APPLICANT NAME CURB INC.

AGENT Bohannan Huston

ADDRESS 7500 Jefferson

PROJECT & APP # 1003429/04DRB01950/015

PROJECT NAME Sierra Ranch

$ 20.00 **441032/3424000 Conflict Management Fee**

$ 4165.00 **441006/4983000 DRB Actions**

$ _____ **441006/4971000 EPC/AA/LUCC Actions & All Appeals**

$ 75.00 **441018/4971000 Public Notification**

$ 3880. **441006/4983000 DRAINAGE PLAN REVIEW OR TRAFFIC IMPACT STUDY*****
( )Major/~~Minor Subdivision~~ ( )Site Development Plan ( )Bldg Permit
( ) Letter of Map Revision ( )Conditional Letter of Map Revision
( ) Traffic Impact Study 3880.00

$ 8140.00 **TOTAL AMOUNT DUE**

****NOTE:** *If a subsequent submittal is required, bring a copy of this paid receipt with you to avoid an* **additional charge.**

City Of Albuquerque
Treasury Division
12/17/2004 11:41AM LOC: ANN
X
RECEIPT# 00032790 WS# 006 TRANS# 0009
Account 441006 Fund 0110
Activity 4983000 TRSEJA
Trans Amt $8,140.00
J24 Misc $4,165.00
CK $4,165.00/6481
CHANGE $0.00
Thank You

City Of Albuquerque
Treasury Division
12/17/2004 11:41AM LOC: ANN
X
RECEIPT# 00032791 WS# 006 TRANS# 0009
Account 441018 Fund 0110
Activity 4971000 TRSEJA
Trans Amt $8,140.00
J24 Misc $75.00
CK $75.00/6481
CHANGE $0.00
Thank You

City Of Albuquerque
Treasury Division
12/17/2004 11:41AM LOC: ANN
X
RECEIPT# 00032792 WS# 006 TRANS# 0009
Account 441006 Fund 0110
Activity 4983000 TRSEJA
Trans Amt $8,140.00
J24 Misc $3,880.00
CK $8,140.00/6481
CHANGE $0.00
Thank You

City Of Albuquerque
Treasury Division
12/17/2004 11:41AM LOC: ANN
X
RECEIPT# 00032793 WS# 006 TRANS# 0009
Account 441032 Fund 0110
Activity 3424000 TRSEJA
Trans Amt $8,140.00
J24 Misc $20.00
CK $20.00/6481
CHANGE $0.00
Thank You

CURB, INC.
PH# 881-9190
5150 SAN FRANCISCO NE
ALBUQUERQUE, NM 87109

95-660/1070
2025113388

DATE 12-16-04

PAY TO THE ORDER OF City of Albuquerque

$ 8140 00

Eight thousand one hundred & forty + no/100 DOLLARS

Security Features Included. Details on Back.

BANK OF ALBUQUERQUE N.A.
Albuquerque, New Mexico
www.bankofalbuquerque.com

MEMO Monitoring Plat EL616

Charles A Huston MP

⑈107006606⑈ 202511338⑈ 6481

6481

FRONT COUNTER ROUTING
FAX FORM

TO: Stephanie

FAX NUMBER: _____

SENT BY: Elaine **DATE:** 12/17/04
Initial

PROJECT NO: 1003429 **APPLICATION NO:** _____

****

Your receipt.

ONE STOP SHOP
CITY OF ALBUQUERQUE PLANNING DEPARTMENT
Development & Building Services

PAID RECEIPT

APPLICANT NAME CURB INC.

AGENT Bohannan Huston

ADDRESS 7500 Jefferson NE

PROJECT & APP # 1003429/04DRB01950/01951

PROJECT NAME Sierra Ranch

$ 20.00 **441032/3424000 Conflict Management Fee**

$ 4165.00 **441006/4983000 DRB Actions**

$ _____ **441006/4971000 EPC/AA/LUCC Actions & All Appeals**

$ 75.00 **441018/4971000 Public Notification**

$ 3880. **441006/4983000 DRAINAGE PLAN REVIEW OR TRAFFIC IMPACT STUDY*****
( )Major/Minor Subdivision ( )Site Development Plan ( )Bldg Permit
( ) Letter of Map Revision ( )Conditional Letter of Map Revision
( ) Traffic Impact Study 3880.00

$ 8140.00 **TOTAL AMOUNT DUE**

****NOTE:** If a subsequent submittal is required, bring a copy of this paid receipt with you to avoid an additional charge.*

City Of Albuquerque
Treasury Division
12/17/2004 11:41AM LOC: ANN
X
RECEIPT# 00032792 WS# 006 TRANS# 0009
Account 441006 Fund 0110
Activity 4983000 TRSEJA
Trans Amt $8,140.00
J24 Misc $3,880.00
CK $8,140.00
CHANGE $0.00
Thank You

City Of Albuquerque
Treasury Division
12/17/2004 11:41AM LOC: ANN
X
RECEIPT# 00032790 WS# 006 TRANS# 0009
Account 441006 Fund 0110
Activity 4983000 TRSEJA
Trans Amt $8,140.00
J24 Misc $4,165.00
Thank You

City Of Albuquerque
Treasury Division
12/17/2004 11:41AM LOC: ANN
X
RECEIPT# 00032791 WS# 006 TRANS# 0009
Account 441018 Fund 0110
Activity 4971000 TRSEJA
Trans Amt $75.00
J24 Misc $8,140.00
Thank You

CURB, INC.
PH: 881-9190
5160 SAN FRANCISCO NE
ALBUQUERQUE, NM 87109

95-660/1070
2025113388

6481

DATE 12-16-04

PAY TO THE ORDER OF City of Albuquerque

$ 8140 00

Eight thousand one hundred & forty + no/100 DOLLARS

Security Features Included. Details on Back.

BANK OF ALBUQUERQUE N.A.
Albuquerque, New Mexico
www.bankofalbuquerque.com

MEMO Northern Plat - Elk 16

Charles a Huston MP

⑆107006606⑆ 2025113388⑈ 6481

City Of Albuquerque
Treasury Division
12/17/2004 11:41AM LOC: ANN
X
RECEIPT# 00032789 WS# 006 TRANS# 0009
Account 441032 Fund 0110
Activity 3424000 TRSEJA
Trans Amt $8,140.00
$20.00
Thank You

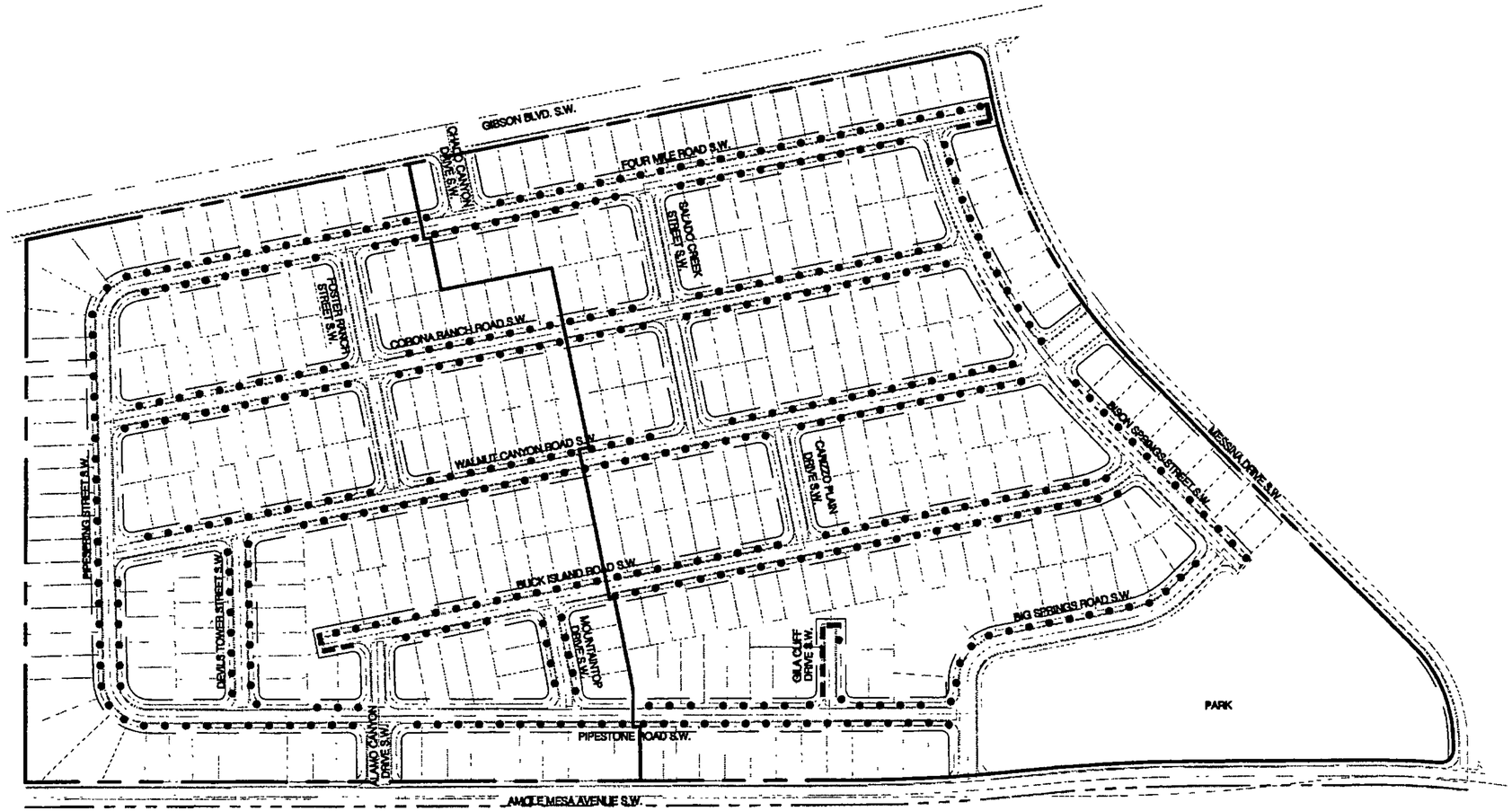

N

NOT TO SCALE

● ● ● ● DEFERRED sidewalks to be built on a lot-by-lot basis as home construction is completed. The deferral is requested to reduce damage to sidewalks due to building construction activities.

- - - - - - - - WAIVED sidewalks are requested

C 1/26/05

EXHIBIT "B"
SIERRA RANCH SUBDIVISION
SIDEWALK DEFERRAL/WAIVER
DECEMBER, 2004

Bohannan ▲ Huston INC.

Courtyard I 7500 Jefferson St. NE Albuquerque, NM 87109-4335

ENGINEERING ▲ SPATIAL DATA ▲ ADVANCED TECHNOLOGIES

:\050188\cdp\general\Exhibits\050188_SW-DEF.dwg
Jan 13, 2005 - 11:32am

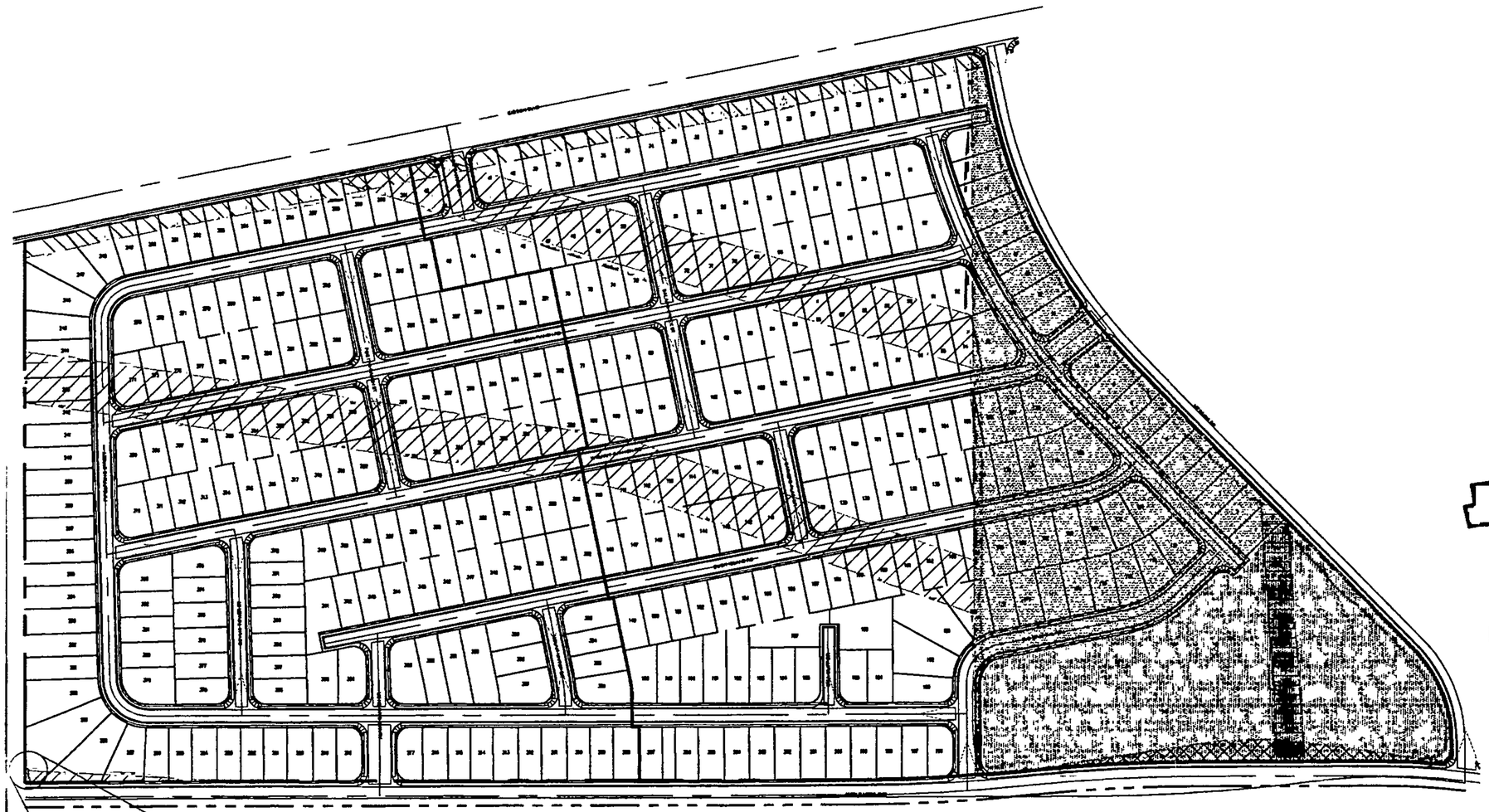

N

NOT TO SCALE

PORTION OF THREE 100-FOOT DRAINAGE EASEMENTS TO BE VACATED. THESE EASEMENTS OVERLAY EXISTING DRAINAGE COURSES THAT WILL BE ELIMINATED WITH THE PROPOSED SITE GRADING. DRAINAGE WILL BE CONVEYED BY STREET AND STORM DRAIN NETWORKS.

PORTION OF 156-FOOT PUBLIC ROADWAY EASEMENT TO BE VACATED. THE GIBSON BOULEVARD RIGHT-OF-WAY HAS BEEN REDUCED FROM 156 FEET TO 124 FEET. THIS REQUEST VACATES THE 32 FOOT DIFFERENCE IN RIGHT-OF-WAY WIDTH.

EXISTING COA BLANKET DRAINAGE EASEMENT TO BE VACATED. THE PROPOSED DRAINAGE PLAN FOR THE SIERRA RANCH SUBDIVISION ELIMINATES THE NEED FOR THE BLANKET DRAINAGE EASEMENT.

60-FOOT FUTURE RIGHT-OF-WAY DELGADO DRIVE TO BE VACATED. THE RIGHT-OF-WAY WAS FOR THE LOCATION OF A FUTURE ROAD. THE PROPOSED MAJOR LOCAL ROAD NETWORK ELIMINATES THE NEED FOR A ROAD IN THIS LOCATION.

EXHIBIT "C"

EXHIBIT B
Date 1/12/05

SIERRA RANCH SUBDIVISION
VACATION EXHIBIT
DECEMBER, 2004

DETAIL "A"

A PORTION OF 150-FOOT DRAINAGE EASEMENT TO BE VACATED. EASEMENTS TO THE WEST OF 118TH STREET WILL REPLACE THE NEED FOR THIS EASEMENT IN THE FUTURE. SEE DETAIL "A" FOR AREA.

A PORTION OF 68-FOOT RIGHT-OF-WAY TO BE VACATED. THIS RIGHT-OF-WAY WAS RESERVED FOR THE FUTURE EXTENSION OF AMOLE MESA AVENUE. THE AMOLE MESA RIGHT-OF-WAY HAS BEEN REALIGNED AS SHOWN ON THE BULK LAND PLAT FOR TRACTS 16-A THRU 16-E, EL RANCHO GRANDE.

Bohannan ▲ Huston INC.
Courtyard I 7500 Jefferson St. NE Albuquerque, NM 87109-4335
ENGINEERING ▲ SPATIAL DATA ▲ ADVANCED TECHNOLOGIES

\050188\cdp\general\Exhibits\050188_VACATION.dwg
Dec 17, 2004 - 9:02am

DRB # 1003429

Zone Boundary Exhibit

Subdivision Name: Sierra Ranch Subdivision

Zone Atlas Page: N-8

Nearest Intersection: Gibson Blvd. and Messina Drive

January, 2004

Approved:_____

P:\050188\cdp\general\Exhibits\zoning boundary.dwg
January 20, 2005 - 3:31pm

2005014731
6210773
Page: 1 of 1
01/31/2005 03:06P
Bk-A91 Pg-4677
Maru Herrera Bern. Co. NOT R 9.00

"NOTICE OF SUBDIVISION PLAT CONDITIONS"
EL RANCHO GRANDE 16A, TRACTS 16-A, 16-B,
16-C, 16-D AND 16-E

THE PLAT OF EL RANCHO GRANDE, TRACTS 16-A, 16-B, 16-C, 16-D, AND 16-E HAS BEEN GRANTED A VARIANCE OR WAIVER FROM CERTAIN SUBDIVISION REQUIREMENTS PURSUANT TO SECTION 14-14-6-1 OF THE CITY OF ALBUQUERQUE SUBDIVISION ORDINANCE.

FUTURE SUBDIVISION OF LANDS WITHIN THIS PLAT, ZONING SITE DEVELOPMENT PLAN APPROVALS, AND DEVELOPMENT PERMITS MAY BE CONDITIONED UPON DEDICATION OF RIGHTS-OF-WAY AND EASEMENTS, AND/OR UPON INFRASTRUCTURE IMPROVEMENTS BY THE OWNER FOR WATER, SANITARY SEWER, STREETS, DRAINAGE, GRADING AND PARKS IN ACCORDANCE WITH CURRENT RESOLUTIONS, ORDINANCES AND POLICIES IN EFFECT AT THE TIME FOR ANY SPECIFIC PROPOSAL.

THE CITY AND AMAFCA (WITH REFERENCE TO DRAINAGE) MAY REQUIRE AND/OR PERMIT EASEMENTS TO BE ADDED, MODIFIED, OR REMOVED WHEN FUTURE PLATS AND/OR SITE DEVELOPMENT PLANS ARE APPROVED.

BY ITS APPROVAL OF THIS SUBDIVISION THE CITY MAKES NO REPRESENTATION OR WARRANTIES AS TO AVAILABILITY OF UTILITIES, OR FINAL APPROVAL OF ALL REQUIREMENTS INCLUDING (BUT NOT LIMITED TO) THE FOLLOWING ITEMS: WATER AND SANITARY SEWER AVAILABLITY; FUTURE STREET DEDICATIONS AND/OR IMPROVEMENTS; PARK AND OPEN SPACE REQUIREMENTS; DRAINAGE REQUIREMENTS AND/OR IMPROVEMENTS; AND, EXCAVATION, FILLING OR GRADING REQUIREMENTS. ANY PERSON INTENDING DEVELOPMENT OF LANDS WITHIN THIS SUBDIVISION IS CAUTIONED TO INVESTIGATE THE STATUS OF THESE ITEMS.

AT SUCH TIME AS ALL SUCH CONDITIONS HAVE BEEN SATISFACTORILY MET, THE CITY ENGINEER SHALL APPROVE A RECORDABLE DOCUMENT, REMOVING SUCH CONDITIONS FROM ALL OR FROM A PORTION OF THE AREA WITHIN THE SUBJECT SUBDIVISION.

Charles A Haegelin

CURB INC., MR. CHARLES HAEGELIN, PRESIDENT

OFFICIAL SEAL
RICHARD J. SQUIRES
NOTARY PUBLIC-STATE OF NEW M
My commission expires: 10/1/07

STATE OF NEW MEXICO)
BERNALILLO COUNTY)

On this 9th day of DECEMBER, 2004, this instrument was acknowledged acknowledged before me by Mr. Charles Haegelin, President, Curb Inc.

Notary Public

Chairperson
Development Review Board

Bohannan Huston Inc.

Courtyard I
7500 Jefferson St. NE
Albuquerque, NM
87109-4335

www.bhinc.com

voice: 505.823.1000
facsimile: 505.798.7988
toll free: 800.877.5332

#3

SENT VIA FAX

January 6, 2005

Sheran Matson, Chair
Development Review Board
City of Albuquerque
P.O. Box 1293
Albuquerque, New Mexico 87103

Re: Request for Deferral
Sierra Ranch Subdivision, DRB Project #1003429

Dear Sheran:

We request a two week deferral of the referenced application scheduled for the Development Review Board hearing on January 12, 2005. The deferral is requested because the 15-day appeal period for the bulk land plat that created Tracts 16-B and 16-C, El Rancho Grande ends on January 20, 2005. Tracts 16-B and 16-C, El Rancho Grande, are Units 1 and 2 of the Sierra Ranch Subdivision, respectively. Based on this request, we anticipate a DRB hearing on January 26, 2005.

If you have any questions or require further information, please call me at 823-1000.

Sincerely,

Scott J. Steffen, P.E.
Project Manager
Community Development and Planning Group

cc: Bo Johnson, Curb Inc.

P:\050186\cdp\correst\Letters\050106 DRB deferral ltr1.doc

01/05/05 WED 14:25 FAX 5059243864 001

****
*** TX REPORT ***
****

TRANSMISSION OK

TX/RX NO	2755
CONNECTION TEL	97987988
SUBADDRESS	
CONNECTION ID	
ST. TIME	01/05 14:24
USAGE T	00'55
PGS.	2
RESULT	OK

CITY OF ALBUQUERQUE
PLANNING DEPARTMENT
FAX FORM

TO: Scott Steffen **FAX #** 798-7988

 # PAGES (INCLUDING COVER SHEET) 2

FROM: Sheran Matson, DRB Chair FAX # 924-3864 PHONE # 924-3880

#1003429

COMMENTS:

Planning Comments Only.

PUBLIC HEARING--DEVELOPMENT REVIEW BOARD
CITY OF ALBUQUERQUE

Notice is hereby given that the Development Review Board, City of Albuquerque, will hold a public hearing in the **Plaza del Sol Hearing Room, Basement, Plaza del Sol Building, 600 2nd St NW,** on **Wednesday, January 12, 2005,** beginning at **9:00 a.m.** for the purpose of considering the following:

Project # 1002384
04DRB-01942 Major-Two Year SIA

BOHANNAN HUSTON INC agent(s) for D R HORTON HOMES request(s) the above action(s) for all or a portion of Tract(s) 4, COORS VILLAGE, (to be known as **RANCHO ENCANTADO DEL SUR,** zoned SU-3, located on COORS BLVD NW, between ATRISCO BLVD NW and MILNE RD NW containing approximately 20 acre(s). [REF: 03DRB01369] (F-11)

No objection to the one year extension.

Project # 1003429
04DRB-01950 Major-Preliminary Plat Approval
04DRB-01951 Major-Vacation of Pub Right-of-Way
04DRB-01952 Major-Vacation of Public Easements
04DRB-01953 Minor-Sidewalk Waiver
04DRB-01954 Minor-Temp Defer SDWK

BOHANNAN HUSTON INC agent(s) for CURB INC request(s) the above action(s) for all or a portion of Tract(s) 16B & 16C EL RANCHO GRANDE, (to be known as **SIERRA RANCH SUBDIVISION,** zoned R-LT & RD, located on GIBSON BLVD SW, between MESSINA SW and GIBSON SW containing approximately 62 acre(s). [REF: 04DRB-01891, 04DRB00717] (N-8)

The 15 day appeal period is not yet up for the bulk land plat approval. DRB cannot act on this preliminary plat until the 15 day appeal passes. The earliest date DRB can consider this application is at the January 26, 2005 hearing. Applicant should submit a letter requesting a deferral until this date and pay the deferral fee.

The perimeter wall submittal is not complete. The location map does not show walls where the side yards face streets. It's assumed these homes will have backyard walls extending to the side yard within 20' of the front yard property line. The maximum height for these walls is 6' on the street side assuming no retaining wall. The perimeter wall design should indicate if there are any retaining walls planned. Lots 372, 366, 359, 353, 356 and 183, 185 & 195 represent corner lots with rear yards contiguous to the front yards of abutting lots. Double check to see if this is a complete list of lots in this situation. Please see Section 14-16-3-19 of the Zone Code for the wall height requirements for these lots & include elevations for these lots in your perimeter wall design.

#3

3429

DXF Electronic Approval Form

DRB Project Case #: 1003429

Subdivision Name: EL RANCHO GRANDE TRACTS 16A THRU 16F

Surveyor: TIMOTHY ALDRICH

Contact Person: TIMOTHY ALDRICH

Contact Information:

DXF Received: 1/11/2005 Hard Copy Received: 1/10/2005

Coordinate System: Ground rotated to NMSP Grid

Thomas A Gallegos — Approved

1/11/05 — Date

* The DXF file cannot be accepted (at this time) for the following reason(s):

AGIS Use Only

Copied cov **3429** to agiscov on **1/11/2005** Contact person notified on **1/11/2005**

OFFICIAL NOTICE OF DECISION

CITY OF ALBUQUERQUE
PLANNING DEPARTMENT
DEVELOPMENT REVIEW BOARD

January 5, 2005

8. Project # 1003429
04DRB-01891 Major-Bulk Land Variance
04DRB-01892 Minor-Prelim&Final Plat Approval

ALDRICH LAND SURVEYING agent(s) for RIO BRAVO PARTNERS request(s) the above action(s) for all or a portion of Parcel 1, **RIO BRAVO PARTNERS**, Tract(s) 16, **EL RANCHO GRANDE, UNIT 14** and a portion of **WESTGATE DRAINAGE DAM,** zoned RD & RLT, located on GIBSON BLVD SW, between MESSINA DR SW and DELGADO DR SW containing approximately 121 acre(s). [REF: 04DRB00717] (N-8)

At the January 5, 2005, Development Review Board meeting, the Bulk Land Variance was approved subject to the Findings and Conditions of the Subdivision Ordinance as follows:

BULK LAND VARIANCE:

1. The variance will not be injurious to the public safety, health or welfare, or to adjacent property, the neighborhood or the community.

2. The variance will not conflict significantly with the goals and provisions of any City, County or AMAFCA adopted plan or policy; the applicable zoning ordinance, or any other City code or ordinance.

3. The variance will not permit, encourage or make possible undesired development in the 100-year floodplain.

4. The variance will not hinder future planning, public right-of-way acquisition, or the financing or building of public infrastructure improvements.

The Preliminary plat was approved with final sign off delegated to City Engineer for AMAFCA'S signature and Planning for AGIS dxf file and the 15-day appeal period.

If you wish to appeal this decision, you must do so by January 20, 2005, in the manner described below.

Appeal is to the Environmental Planning Commission. Any person aggrieved with any determination of the Development Review Board may file an appeal on the Planning Department form, to the Planning Department, within 15 days of the Development Review Board's decision. The date the determination in question is issued is not included in the 15-day period for filing an appeal.

If the fifteenth day falls on a Saturday, Sunday or holiday as listed in the Merit System Ordinance, the next working day is considered as the deadline for filing the appeal. Such appeal shall be heard within 60 days of its filing.

You will receive notice if any other person files an appeal. Successful applicants are reminded that other requirements of the City must be complied with, even after approval of the referenced application(s).

Sheran Matson, AICP, DRB Chair

Cc: Rio Bravo Partners, 5160 San Francisco NE, 87109
Aldrich Land Surveying, 4109 Montgomery Blvd NE, 87109
Marilyn Maldonado, Planning Department, 4th Floor, Plaza del Sol Bldg.
File

DRB CASE ACTION LOG (PREL & FINAL)

REVISED 2/5/04

This sheet must accompany your plat or site plan to obtain delegated signatures. Return sheet with site plan/plat once comments are addressed.

DRB Application No.: **04DRB-01892 (P&F)** Project # **1003429**

Project Name: **EL RANCHO GRANDE 14**

Agent: Aldrich Land Surveying Phone No.: 884-1990

Your request for **(SDP for SUB), (SDP for BP), (FINAL PLATS), (MASTER DEVELOP. PLAN),** was approved on 1/5/05 by the DRB with delegation of signature(s) to the following departments.

OUTSTANDING SIGNATURES COMMENTS TO BE ADDRESSED

- ☐ TRANSPORTATION:
- ☐
- ☐
- ☐
- ☐
- ☐ UTILITIES:
- ☐
- ☐
- ☐
- ☒ CITY ENGINEER / AMAFCA: AMAFCA's sig
- ☐
- ☐
- ☐
- ☐ PARKS / CIP:
- ☐
- ☐
- ☐
- ☒ PLANNING (Last to sign): 15 day appeal period
- ☐ Notice of Subdivision Plat
- ☐ Resolution
- ☐
- ☒

Planning must record this plat. Please submit the following items:

-The original plat and a mylar copy for the County Clerk.
-Tax certificate from the County Treasurer.
-Recording fee (checks payable to the County Clerk). RECORDED DATE: _____
-Tax printout from the County Assessor.

- ☐ **Include 3 copies of the approved site plan along with the originals.**
- ☐ **County Treasurer's signature must be obtained prior to the recording of the plat with the County Clerk.**
- ☐ **Property Management's signature must be obtained prior to Planning Department's signature.**
- ☒ **AGIS DXF File approval required.**
- ☐ **Copy of recorded plat for Planning.**

Project Number 1003429

DRB PUBLIC HEARING SIGN IN SHEETS

CASE NUMBER: 1003429 AGENDA#: 8 DATE: 1-5-05

1. Name: Jim Aldrich Address: Curtis Inc Zip: _____
2. Name: Rich Lyons Address: Curtis Inc Zip: _____
3. Name: _____ Address: _____ Zip: _____
4. Name: _____ Address: _____ Zip: _____
5. Name: _____ Address: _____ Zip: _____
6. Name: _____ Address: _____ Zip: _____
7. Name: _____ Address: _____ Zip: _____
8. Name: _____ Address: _____ Zip: _____
9. Name: _____ Address: _____ Zip: _____
10. Name: _____ Address: _____ Zip: _____
11. Name: _____ Address: _____ Zip: _____
12. Name: _____ Address: _____ Zip: _____
13. Name: _____ Address: _____ Zip: _____
14. Name: _____ Address: _____ Zip: _____

CITY OF ALBUQUERQUE

P.O. Box 1293

Albuquerque

New Mexico 87103

www.cabq.gov

PLANNING DEPARTMENT
DEVELOPMENT AND BUILDING SERVICES
HYDROLOGY DEVELOPMENT SECTION

ALBUQUERQUE
Making History

DEVELOPMENT REVIEW BOARD--SPEED MEMO

DRB CASE NO/PROJECT NO: 1003429 **AGENDA ITEM NO: 8**

SUBJECT:

(01) Sketch Plat/Plan	(05) Site Plan for Subd	(10) Sector Dev Plan
(02) Bulk Land Variance	(06) Site Plan for BP	(11) Grading Plan
(03) Sidewalk Variance	(07) Vacation	(12) SIA Extension
(03a) Sidewalk Deferral	(08) Final Plat	(13) Master Dev. Plan
(04) Preliminary Plat	(09) Infrastructure List	(14) Cost Allocation Plan

ACTION REQUESTED:

REV/CMT:() APP:(x) SIGN-OFF:() EXTN:() AMEND:()

ENGINEERING COMMENTS:

See staff report dated 1-5-05.

RESOLUTION:

APPROVED ____; DENIED ____; DEFERRED ____; COMMENTS PROVIDED ___; WITHDRAWN

SIGNED-OFF: **(SEC-PLN) (SP-SUB) (SP-BP) (FP)** BY: **(UD) (CE) (TRANS) (PKS) (PLNG)**

DELEGATED: **(SEC-PLN) (SP-SUB) (SP-BP) (FP)** TO: **(UD) (CE) (TRANS) (PKS) (PLNG)**

FOR:

SIGNED: Bradley L. Bingham
City Engineer/AMAFCA Designee

DATE: January 4, 2005

CITY OF ALBUQUERQUE
PLANNING DEPARTMENT
DEVELOPMENT REVIEW BOARD

January 5, 2005

Project # 1003429
04DRB-01891 Major-Bulk Land Variance
04DRB-01892 Minor-Prelim&Final Plat Approval

ALDRICH LAND SURVEYING agent(s) for RIO BRAVO PARTNERS request(s) the above action(s) for all or a portion of Parcel 1, **RIO BRAVO PARTNERS**, Tract(s) 16, **EL RANCHO GRANDE, UNIT 14** and a portion of **WESTGATE DRAINAGE DAM,** zoned RD & RLT, located on GIBSON BLVD SW, between MESSINA DR SW and DELGADO DR SW containing approximately 121 acre(s). [REF: 04DRB00717] (N-8)

AMAFCA No objection to requested actions. AMAFCA will sign the Bulk Land Plat.

COG The future Gibson Blvd is proposed as a principal arterial with a right of way of 156'. Additionally, the Long Range Bikeway System map identifies Gibson West as a Study Corridor. City of Albuquerque Municipal Development should be consulted for bikeway improvements as appropriate.

Transit No objection to the request.

Zoning Enforcement Reviewed, no comment.

Neighborhood Coordination

Letters sent to Westgate Heights NA (R) and Westgate Vecinos Neighborhood Associations.

APS No comments received.

Police Department

A review of the following DRB case(s) indicates the following problems or crimes may occur or that the following concerns may need to be evaluated or addressed on this site or in this area. These comments do not indicate that a thorough CPTED evaluation has been done, or that other criminal activities may not occur. Traffic control devices, burglaries, speeding violations, lighting issues, robbery, assault, a higher probability of crimes during evening/weekend hours, commercial burglary, need for a neighborhood association, other: gang activity, narcotics.

Fire Department	no adverse comments.
PNM Electric & Gas	Approves.
Comcast	No comments received.
QWEST	No comments received.
Environmental Health	Site is not within 1000 feet of a landfill. No comment.
M.R.G.C.D.	No comments received.
Open Space Division	No comments received.

City Engineer

No objection to BLV. AMAFCA must sign plat as owner of Westgate Dam Drainage R/W and this plat must replat the entire tract.

Transportation Development

Are these tracts being considered in the overall TIS being prepared for Curb Inc.? When will the remaining portion of the Gibson Blvd. easement be vacated? Unsure of how the intersection of Amole Mesa and Messina Drive works? Does this need to be widened to accommodate left turn bays?

Parks & Recreation — No Objection.

Utilities Development — No objection to Bulk Variance. No objection to Prelim/Final Plat.

Planning Department

The current zoning is not listed on the Preliminary Plat under Subdivision Data.

If approved, Planning cannot sign the plat until the 15 day appeal period is past.

The Notice of Subdivision Plat Conditions must be signed & filed with the Bulk Land Plat. Be sure this signed form is turned in with the plat at the time of recording by Planning. It must be recorded with the bulk plat.

Tract 16 A & part of Tract 16B lies within the Rio Bravo Sector Plan area.

IT IS REQUIRED THAT THE APPLICANT AND/OR AGENT BE PRESENT AT THE HEARING

cc: Rio Bravo Partners, 5160 San Francisco NE, 87109
Aldrich Land Surveying, 4109 Montgomery Blvd NE, 87109

PUBLIC HEARING--DEVELOPMENT REVIEW BOARD
CITY OF ALBUQUERQUE

PAGE 2

Project #1003429
04DRB-01891 Major-Bulk Land Variance
04DRB-01892 Minor-Prelim&Final Plat Approval

ALDRICH LAND SURVEYING agent(s) for RIO BRAVO PARTNERS request(s) the above action(s) for all or a portion of Parcel 1, **RIO BRAVO PARTNERS**, Tract(s) 16, **EL RANCHO GRANDE, UNIT 14** and a portion of **WESTGATE DRAINAGE DAM,** zoned RD & RLT, located on GIBSON BLVD SW, between MESSINA DR SW and DELGADO DR SW containing approximately 121 acre(s). [REF: 04DRB00717] (N-8)

Details of the application(s) may be examined at the Development Services Center of the Planning Department, Second Floor, Plaza Del Sol Building, 600 2nd St NW, between 10:00 a.m. and 12:00 p.m. or 2:00 p.m. and 4:00 p.m. Monday through Friday except holidays. Individuals with disabilities who need special assistance to participate at this meeting should contact Claire Senova, Planning Department, at 924-3946. Hearing Impaired users may contact her via the New Mexico Relay Network by calling toll-free: 1-800-659-8331.

Sheran Matson, AICP, DRB Chair
Development Review Board

TO BE PUBLISHED IN THE ALBUQUERQUE JOURNAL MONDAY, DECEMBER 20, 2004.

PUBLIC HEARING--DEVELOPMENT REVIEW BOARD
CITY OF ALBUQUERQUE

Notice is hereby given that the Development Review Board, City of Albuquerque, will hold a public hearing in the **Plaza del Sol Hearing Room, Basement, Plaza del Sol Building, 600 2nd St NW,** on **Wednesday, January 5, 2005,** beginning at **9:00 a.m.** for the purpose of considering the following:

Project # 1000269
04DRB-01894 Major-Two Year SIA

TIERRA WEST LLC agent(s) for UNION PENSION TRANSACTION TRUST NM 2000-02 request(s) the above action(s) for all or a portion of Tract(s) 5B2C1B, 5B2B1 and 5B2C1A1, **RENAISSANCE CENTER,** zoned SU-1 C-2, located on MERCANTILE AVE NE, between CULTURE AVE NE and PAN AMERICAN FWY NE containing approximately 1 acre(s). [REF: 00DRB00226, 03DRB01269] (F-16)

Project # 1000419
04DRB-01897 Major-Two Year SIA

TIERRA WEST LLC agent(s) for UNION PENSION TRANSACTION TRUST NM 2000-02 request(s) the above action(s) for all or a portion of Tract(s) 1B1A, 1B1B and 1B1C, **RENAISSANCE CENTER,** zoned SU1 C-1, located on RENAISSANCE BLVD NE, between MONTANO RD NE and UNION WAY RD NE containing approximately 3 acre(s). [REF: 02AA00165 & 00164, 02AA00814, 03DRB00590] (F-16)

Project # 1000662
04DRB-01893 Major-Two Year SIA

TIERRA WEST LLC agent(s) for UNION PENSION TRANSACTION TRUST NM 2000-02 request(s) the above action(s) for all or a portion of Tract(s) 3A3A1, 3A3A3 and 3A3A2A, **RENAISSANCE CENTER,** zoned SU-1 IP, located on MISSION BLVD NE, between ALEXANDER BLVD NE and CULTURE DR NE containing approximately 8 acre(s [REF: 00AA00943, 04DRB00370 & 00310] (F-16)

Project # 1000874
04DRB-01895 Major-Two Year SIA

TIERRA WEST LLC agent(s) for UNION PENSION TRANSACTION TRUST NM 2000-02 request(s) the above action(s) for all or a portion of Tract(s) B1, C2, C3 and C4, **RENAISSANCE CENTER,** zoned SU-1 IP, located on MONTANO RD NE, between ALEXANDER BLVD NE and PAN AMERICAN FWY NE containing approximately 9 acre(s). [REF: 00DRB01464, 03DRB00444] (F-16)

Project # 1001118
04DRB-01896 Major-Two Year SIA

TIERRA WEST LLC agent(s) for UNION PENSION TRASACTION TRUST NM 2000-02 request(s) the above action(s) for all or a portion of Tract(s) 4A1 and 4A2, **RENAISSANCE CENTER,** zoned SU-1 FOR IP, located on RENAISSANCE BLVD NE, between CULTURE AVE NE and ALEXANDER BLVD NE containing approximately 9 acre(s). [REF: 03AA02065, 01DRB00342] (F-16)

SEE PAGE 2 . . .

PUBLIC HEARING--DEVELOPMENT REVIEW BOARD
CITY OF ALBUQUERQUE

PAGE 2

Project #1003429
04DRB-01891 Major-Bulk Land Variance
04DRB-01892 Minor-Prelim&Final Plat Approval

ALDRICH LAND SURVEYING agent(s) for RIO BRAVO PARTNERS request(s) the above action(s) for all or a portion of Parcel 1, **RIO BRAVO PARTNERS**, Tract(s) 16, **EL RANCHO GRANDE, UNIT 14** and a portion of **WESTGATE DRAINAGE DAM,** zoned RD & RLT, located on GIBSON BLVD SW, between MESSINA DR SW and DELGADO DR SW containing approximately 121 acre(s). [REF: 04DRB00717] (N-8)

Details of the application(s) may be examined at the Development Services Center of the Planning Department, Second Floor, Plaza Del Sol Building, 600 2nd St NW, between 10:00 a.m. and 12:00 p.m. or 2:00 p.m. and 4:00 p.m. Monday through Friday except holidays. Individuals with disabilities who need special assistance to participate at this meeting should contact Claire Senova, Planning Department, at 924-3946. Hearing Impaired users may contact her via the New Mexico Relay Network by calling toll-free: 1-800-659-8331.

Sheran Matson, AICP, DRB Chair
Development Review Board

TO BE PUBLISHED IN THE ALBUQUERQUE JOURNAL MONDAY, DECEMBER 20, 2004.

PUBLIC HEARING--DEVELOPMENT REVIEW BOARD
CITY OF ALBUQUERQUE

Notice is hereby given that the Development Review Board, City of Albuquerque, will hold a public hearing in the **Plaza del Sol Hearing Room, Basement, Plaza del Sol Building, 600 2nd St NW,** on **Wednesday, January 5, 2005,** beginning at **9:00 a.m.** for the purpose of considering the following:

Project # 1000269
04DRB-01894 Major-Two Year SIA

TIERRA WEST LLC agent(s) for UNION PENSION TRANSACTION TRUST NM 2000-02 request(s) the above action(s) for all or a portion of Tract(s) 5B2C1B, 5B2B1 and 5B2C1A1, **RENAISSANCE CENTER,** zoned SU-1 C-2, located on MERCANTILE AVE NE, between CULTURE AVE NE and PAN AMERICAN FWY NE containing approximately 1 acre(s). [REF: 00DRB00226, 03DRB01269] (F-16)

Project # 1000419
04DRB-01897 Major-Two Year SIA

TIERRA WEST LLC agent(s) for UNION PENSION TRANSACTION TRUST NM 2000-02 request(s) the above action(s) for all or a portion of Tract(s) 1B1A, 1B1B and 1B1C, **RENAISSANCE CENTER,** zoned SU1 C-1, located on RENAISSANCE BLVD NE, between MONTANO RD NE and UNION WAY RD NE containing approximately 3 acre(s). [REF: 02AA00165 & 00164, 02AA00814, 03DRB00590] (F-16)

Project # 1000662
04DRB-01893 Major-Two Year SIA

TIERRA WEST LLC agent(s) for UNION PENSION TRANSACTION TRUST NM 2000-02 request(s) the above action(s) for all or a portion of Tract(s) 3A3A1, 3A3A3 and 3A3A2A, **RENAISSANCE CENTER,** zoned SU-1 IP, located on MISSION BLVD NE, between ALEXANDER BLVD NE and CULTURE DR NE containing approximately 8 acre(s [REF: 00AA00943, 04DRB00370 & 00310] (F-16)

Project # 1000874
04DRB-01895 Major-Two Year SIA

TIERRA WEST LLC agent(s) for UNION PENSION TRANSACTION TRUST NM 2000-02 request(s) the above action(s) for all or a portion of Tract(s) B1, C2, C3 and C4, **RENAISSANCE CENTER,** zoned SU-1 IP, located on MONTANO RD NE, between ALEXANDER BLVD NE and PAN AMERICAN FWY NE containing approximately 9 acre(s). [REF: 00DRB01464, 03DRB00444] (F-16)

Project # 1001118
04DRB-01896 Major-Two Year SIA

TIERRA WEST LLC agent(s) for UNION PENSION TRASACTION TRUST NM 2000-02 request(s) the above action(s) for all or a portion of Tract(s) 4A1 and 4A2, **RENAISSANCE CENTER,** zoned SU-1 FOR IP, located on RENAISSANCE BLVD NE, between CULTURE AVE NE and ALEXANDER BLVD NE containing approximately 9 acre(s). [REF: 03AA02065, 01DRB00342] (F-16)

SEE PAGE 2 . . .

CITY OF ALBUQUERQUE

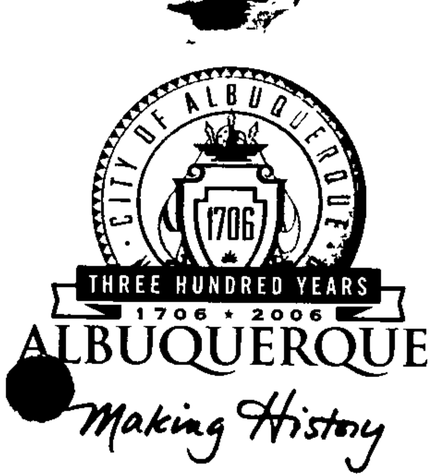

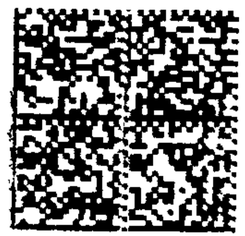

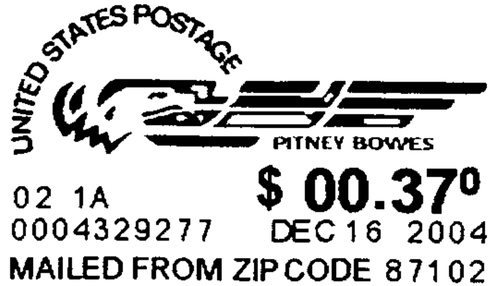

Planning Department

P.O. Box 1293

Albuquerque, NM 87103

100805412043830140

ARROYO VISTA NEW MEXICO LLC
1880 SANTA BARBARA BL
SAN LUIS OBI CA 93401

NIXIE 880 0 1 .. 00 12/21/04

RETURN TO SENDER
INSUFFICIENT ADDRESS
UNABLE TO FORWARD

BC: 87103129393 *0168-04247-16-41

87103%1293

CITY OF PLANNING
PLANNING DEPARTMENT
PROPERTY OWNERSHIP LIST

Meeting Date: JANUARY 5, 2005
Zone Atlas Page: N-8-Z
Notification Radius: 100 Ft.

Project# 1003429
App# 04DRB-01891
App# 04DRB-01892

Cross Reference and Location:

Applicant: RIO BRAVO PARTNERS
Address: 5160 SAN FRANCISCO NE
ALBUQUERQUE NM 87109

Agent: ALDRICH LAND SURVEYING
Address: 4109 MONTGOMERY BLVD NE
ALBUQUERQUE NM 87109

.

Special Instructions:

Notice must be mailed from the
City's 15 day prior to the meeting.

Date Mailed: DECEMBER 17, 2004

Signature: KYLE TSETHLIKAI

PROPERTY OWNERSHIP / LEGAL LIST

App#_____
Proj#_____

Date:_____

Page 1 Of 1

Zone Atlas Page	Zone Atlas #	Grid Location	Parcel Sequence	Name & Address			
N-8	1008054	285-524	201-01	✓ 1008055	359-005	421	06 ✓
		332-412	101-04	✓ DM	382-005		05 ✓
		505-500	03	✓ DM	377-005		04 ✓
		507-400	05	✓ DM	370-005		03 ✓
		504-348	01	✓ DM	363-005		02 ✓
		120-438	301-40	✓ DM	358-005		01 ✓
		122-265	41	✓ DM	343-005	420	09 ✓
		332-140	42	✓ DM	337-005		08 ✓
		435-200	401-30	✓	331-005		07 ✓
N-9	1009054	057-330	201-03	✓ DM	325-005		06 ✓
		060-215	301-01	✓	319-005		05 ✓
N-8	1008055	447-005	422-02	✓	312-005		04 ✓
		440-005	01	✓	302-005		03 ✓
		427-005	421-12	✓	300-012		02 ✓
		421-005	11	✓	281-016		01 ✓
		414-005	10	✓	315-040		17 ✓ COA
		408-005	09	✓	080-321	202	17 ✓
		401-005	08	✓			
		395-005	07	✓			

<mainframe@coa1mp3.cabq.gov>

12/16/2004 09:43 AM

To:
cc:
cc:
Subject:

1 R E C O R D S W I T H L A B E L S PAGE 1

01008054 *** THIS UPC CODE HAS NO MASTER RECORD ON FILE
0100805422552420101 LEGAL: WEST GATE DAM DRAINAGE ROW CONT 7.4400 AC M/L OR 32 LAND USE:
PROPERTY ADDR: 00000 N/A
OWNER NAME: AMAFCA
OWNER ADDR: 02600 PROSPECT NE
ALBUQUERQUE NM 87107
0100805433741210104 LEGAL: PARC EL 1 OF LANDS OF RIO BRAVO PARTNERS LOCATED IN LAND USE:
PROPERTY ADDR: 00000 N/A
OWNER NAME: CURB INC
OWNER ADDR: 06301 INDIAN SCHOOL RD NE
ALBUQUERQUE NM 87110
0100805450550010103 LEGAL: TR A -1 B ULK LAND PLAT FOR TRACT A-1, A-2 & B-1 ROS LAND USE:
PROPERTY ADDR: 00000
OWNER NAME: CURB INC
OWNER ADDR: 06301 INDIAN SCHOOL RD NE
ALBUQUERQUE NM 87110
0100805450740010105 LEGAL: TR 14 BULK LAND PLAT FOR TRACTS 14, 15, & 16 EL RANCHO GRANDE CONT 22.4339
PROPERTY ADDR: 00000
OWNER NAME: CURB INC
OWNER ADDR: 6301 INDIAN SCHOOL RD NE, # 208
ALBUQUERQUE NM 87110
0100805450434810101 LEGAL: TR 16 BULK LAND PLAT FOR TRACT 14, 15 & 16 EL RANCHO GRANDE CONT 16.6622
PROPERTY ADDR: 00000
OWNER NAME: CURB INC
OWNER ADDR: 6301 INDIAN SCHOOL RD NE, #208
ALBUQUERQUE NM 87110
0100805412043830140 LEGAL: 2-A PLAT OF LANDS OF RIO BRAVO PARTNERS PARCELS 2A LAND USE:
PROPERTY ADDR: 00000 N/A
OWNER NAME: ARROYO VISTA NEW MEXICO LLC
OWNER ADDR: 01880 SANTA BARBARA BL
SAN LUIS OBICA 93401
0100805412226530141 LEGAL: 2-B PLAT OF LANDS OF RIO BRAVO PARTNERS PARCELS 2A LAND USE:
PROPERTY ADDR: 00000 N/A
OWNER NAME: ARROYO VISTA NEW MEXICO LLC
OWNER ADDR: 01880 SANTA BARBARA BL
SAN LUIS OBICA 93401
0100805433214030142 LEGAL: 2-D PLAT OF LANDS OF RIO BRAVO PARTNERS PARCELS 2A LAND USE:
PROPERTY ADDR: 00000 N/A
OWNER NAME: ARROYO VISTA NEW MEXICO LLC
OWNER ADDR: 01880 SANTA BARBARA BL
SAN LUIS OBICA 93401

010080544952004013O LEGAL: TR B -1 B ULK LAND PLAT FOR TRACT A-1, A-2 & B-1
RO LAND USE:
PROPERTY ADDR: 00000
OWNER NAME: AVALON WEST INVESTMENTS LLC
OWNER ADDR: 06301 INDIAN SCHOOL RD NE
ALBUQUERQUE NM 87110
01009054037330201O3 LEGAL: TR 15 BULK LAND PLAT FOR TRACTS 14, 15 & 16 EL
RANCHO GRANDE CONT 22.9599
PROPERTY ADDR: 00000
OWNER NAME: CURB INC
OWNER ADDR: 6301 INDIAN SCHOOL RD NE, #208
ALBUQUERQUE NM 87110
01009054060215301O1 LEGAL: TR 29A CORRECTION PLAT VACATION & BULK LAND PLAT
TRACTS A, 29A, 30A-1, 31A-1 32H-1, 3
PROPERTY ADDR: 00000
OWNER NAME: SALAZAR FAMILY TRUST & JSJ INVESTMENTS
OWNER ADDR: PO BOX 1849
ALBUQUERQUE NM 87199
01008055447005422O2 LEGAL: 2 G ATRI SCO VILLAGE UNIT J T SUBD
LAND USE:
PROPERTY ADDR: 00000 CARTAGENA
OWNER NAME: LEYBA RUDOLPH R & YVETTE P
OWNER ADDR: 10508 CARTAGENA AV SW
ALBUQUERQUE NM 87121
01008055440005422O1 LEGAL: 1 G ATRI SCO VILLAGE UNIT J T SUBD
LAND USE:
PROPERTY ADDR: 00000 CARTAGENA
OWNER NAME: ANDUJO JOSE R & MARIA R
OWNER ADDR: 10512 CARTAGENA AV SW
ALBUQUERQUE NM 87121
01008055427005421I2 LEGAL: 12 B ATR ISCO VILLAGE UNIT J T SUBD
LAND USE:
PROPERTY ADDR: 00000 CARTAGENA
OWNER NAME: OLIVAS CLARA M
OWNER ADDR: 10600 CARTAGENA AV SW
ALBUQUERQUE NM 87121
01008055421005421I1 LEGAL: 11 B ATR ISCO VILLAGE UNIT J T SUBD
LAND USE:
PROPERTY ADDR: 00000 CARTAGENA
OWNER NAME: OLIVAS JOSE & MARTHA
OWNER ADDR: 10604 CARTAGENA SW
ALBUQUERQUE NM 87121
01008055414005421I0 LEGAL: 10 B ATR ISCO VILLAGE UNIT J T SUBD
LAND USE:
PROPERTY ADDR: 00000 N/A
OWNER NAME: VALLES ABDON & MAGDA B
OWNER ADDR: 10608 CARTAGENA AV SW
ALBUQUERQUE NM 87121
01008055408005421O9 LEGAL: 9 B ATRI SCO VILLAGE UNIT J T SUBD
LAND USE:
PROPERTY ADDR: 00000 CARTAGENA
OWNER NAME: VALDEZ LEVI D N
OWNER ADDR: 10612 CARTAGENA AV SW
ALBUQUERQUE NM 87121

0100805540100542108 LEGAL: 8 B ATRI SCO VILLAGE UNIT J T SUBD
LAND USE:
PROPERTY ADDR: 00000 CARTAGENA
OWNER NAME: GUADERRAMA ARTURO
OWNER ADDR: 10700 CARTEGENA AV SW
ALBUQUERQUE NM 87121
0100805539500542107 LEGAL: 7 B ATRI SCO VILLAGE UNIT J T SUBD
LAND USE:
PROPERTY ADDR: 00000 N/A
OWNER NAME: SALAZAR DAVID A
OWNER ADDR: 10704 CARTAGENA SW
ALBUQUERQUE NM 87102
0100805538900542106 LEGAL: 6 B ATRI SCO VILLAGE UNIT J T SUBD
LAND USE:
PROPERTY ADDR: 00000 CARTAGENA
OWNER NAME: GURULE ROBERT J & JULIA
OWNER ADDR: 10708 CARTAGENA AV SW
ALBUQUERQUE NM 87121
0100805538200542105 LEGAL: 5 B ATRI SCO VILLAGE UNIT J T SUBD
LAND USE:
PROPERTY ADDR: 00000 CARTAGENA
OWNER NAME: OWENS IRMA JEAN
OWNER ADDR: 10712 CARTAGENA SW
ALBUQUERQUE NM 87121
0100805537700542104 LEGAL: 4 B ATRI SCO VILLAGE UNIT J T SUBD
LAND USE:
PROPERTY ADDR: 00000 CARTAGENA
OWNER NAME: GONZALES JOSEPH V & SALLY & KI
OWNER ADDR: 10800 CARTAGENA AV SW
ALBUQUERQUE NM 87121
0100805537000542103 LEGAL: 3 B ATRI SCO VILLAGE UNIT J T SUBD
LAND USE:
PROPERTY ADDR: 00000 CARTAGENA
OWNER NAME: MUNOZ JOSE L & ARMIDA CHAVIRA
OWNER ADDR: 10804 CARTAGENA AV SW
ALBUQUERQUE NM 87105
0100805536300542102 LEGAL: 0002 B AT RISCO VILLAGE UNIT J T SUBD
LAND USE:
PROPERTY ADDR: 00000 CARTAGENA
OWNER NAME: GARCIA CHARLES N & BARBARA M
OWNER ADDR: 10808 CARTAGENA SW
ALBUQUERQUE NM 87105
0100805535800542101 LEGAL: 1 B ATRI SCO VILLAGE UNIT J T SUBD
LAND USE:
PROPERTY ADDR: 00000 CARTAGENA
OWNER NAME: BURCIAGA JORGE & SOCORRO
OWNER ADDR: 10813 CARTAGENA AV SW
ALBUQUERQUE NM 87121
0100805534300542009 LEGAL: 1 A ATRI SCO VILLAGE UNIT J T SUBD
LAND USE:
PROPERTY ADDR: 00000 CARTAGENA
OWNER NAME: LUCERO BERT M ETUX
OWNER ADDR: 10900 CARTAGENA SW
ALBUQUERQUE NM 87105

01008055337005420008 LEGAL: 2 A ATRI SCO VILLAGE UNIT J T SUBD
LAND USE:
PROPERTY ADDR: 00000 CARTAGENA
OWNER NAME: VITELA AMADEO & GAYLE
OWNER ADDR: 10904 CARTAGENA SW
ALBUQUERQUE NM 87105
01008055331005420007 LEGAL: 3 A ATRI SCO VILLAGE UNIT J T SUBD
LAND USE:
PROPERTY ADDR: 00000 N/A
OWNER NAME: TENA LORENZO &
OWNER ADDR: 00375 SEGOLILY
BOSQUE FARMSNM 87068
01008055325005420006 LEGAL: 4 A ATRI SCO VILLAGE UNIT J T SUBD
LAND USE:
PROPERTY ADDR: 00000 CARTAGENA
OWNER NAME: TORRES TIMOTHY JOHN &
OWNER ADDR: 10912 CARTAGENA SW
ALBUQUERQUE NM 87105
01008055319005420005 LEGAL: 5 A ATRI SCO VILLAGE UNIT J T SUBD
LAND USE:
PROPERTY ADDR: 00000 CARTAGENA
OWNER NAME: GALLEGOS CAROLINE
OWNER ADDR: PO BOX 7081
ALBUQUERQUE NM 87194
01008055312005420004 LEGAL: 6 A ATRI SCO VILLAGE UNIT J T SUBD
LAND USE:
PROPERTY ADDR: 00000 N/A
OWNER NAME: BURCIAGA JORGE & SOCORRO
OWNER ADDR: 10813 CARTAGENA AV SW
ALBUQUERQUE NM 87121
01008055302005420003 LEGAL: 7 A ATRI SCO VILLAGE UNIT J T SUBD
LAND USE:
PROPERTY ADDR: 00000 CARTAGENA
OWNER NAME: LEYBA SYLVIA
OWNER ADDR: 10924 CARTAGENA SW
ALBUQUERQUE NM 87121
01008055300012420002 LEGAL: 0008 A AT RISCO VILLAGE UNIT J T SUBD
LAND USE:
PROPERTY ADDR: 00000 CARTAGENA
OWNER NAME: CUMMINGS BRUCE D & MARY K
OWNER ADDR: 10928 CARTAGENA AV SW
ALBUQUERQUE NM 87121
01008055281016420001 LEGAL: DRAI NAGE EASEMENT IN ATRISCO VILLAGE UNITJ T
SUBD LAND USE:
PROPERTY ADDR: 00000 N/A
OWNER NAME: CONSOLIDATED TRADES INC
OWNER ADDR: 01624 MC DONALD NW
ALBUQUERQUE NM 87107
01008055315040420017 LEGAL: A TR OF LAND IN SW1/4 SE1/4 SEC 32 T10N R2E
CONT 3 LAND USE:
PROPERTY ADDR: 00000 N/A
OWNER NAME: CITY OF ALBUQUERQUE
OWNER ADDR: PO BOX 1293
ALBUQUERQUE NM 87103

01008055080321202l7 LEGAL: TRAC T 3 PLAT OF TRACTS 1, 2 & 3 LANDS OF GREVEY/LI LAND USE:

PROPERTY ADDR: 00000 N/A
OWNER NAME: LIBERMAN MAURICE ETAL
OWNER ADDR: 02015 WYOMING BL NE
ALBUQUERQUE NM 87112

.
QUIT

"Attachment A"

ISAACSON & ARFMAN, RUTH LOZANO
Zone Map: N-8

Westgate Heights NA (R)
***Matthew Archuleta**
1628 Summerfield SW / 87121 836-7251 (h)
Libby McIntosh
1316 Ladrones Ct. SW / 87121 831-5189 (h)

ALTHOUGH YOU ARE NOT "OFFICIALLY REQUIRED" BY O-92, you are most welcomed to notify the following *"Unrecognized"* neighborhood associations of this project.

Westgate Vecinos
***Kelly Thomas**
1201 Jcnaro SW / 87121 831-5242 (h)
Sylvia Hayes
10016 Ladrones SW / 87121 836-7358 (h)

LETTERS MUST BE SENT TO BOTH CONTACTS OF EACH NEIGHBORHOOD ASSOCIATION.

ISAACSON & ARFMAN, P.A.

Consulting Engineering Associates

Thomas O. Isaacson, PE & LS • Fred C. Arfman, PE
Scott M. McGee, PE

December 9, 2004 Certified Mail 7003 3110 0006 0529 2063

Ms. Sylvia Hayes
Westgate Vecinos
10016 Ladrones SW
Albuquerque, NM 87121

RE: El Rancho Grande Subdivision Unit 16
(Legal Description -- Parcel 1, Rio Bravo Partners, Tract 16, El Rancho Grande, Unit 14, together with a portion of Westgate Drainage Dam)

Dear Ms. Hayes:

As the consulting engineers for the above referenced site, we are writing this letter to inform the Westgate Vecinos that a request for Bulk Land Plat Variance (121.1730 Ac.) will be submitted to the Development Review Board this week. See attached zone map.

Please call our office at 268-8828 if you need additional information.

Sincerely,

ISAACSON & ARFMAN, P.A.

Fred C. Arfman, PE
FCA/rtl
Attachment

7003 3110 0006 0529 2063

7003 3110 0006 0529 2063

U.S. Postal Service™
CERTIFIED MAIL™ RECEIPT
(Domestic Mail Only; No Insurance Coverage Provided)

For delivery information visit our website at www.usps.com®

ALBUQUERQUE, NM 87121

Postage	$ 0.37	UNIT ID: 0108
Certified Fee	2.30	
Return Reciept Fee (Endorsement Required)	1.75	Postmark Here
Restricted Delivery Fee (Endorsement Required)		Clerk: KZ4YYX
Total Postage & Fees	$ 4.42	12/09/04

HILDA A. ALBUQUERQUE USPS

Sent To: Sylvia Hayes
Westgate Vecinos
Street, Apt. No.; or PO Box No.: 10016 Ladrones SW
City, State, ZIP+4: Albuquerque, NM 87121

PS Form 3800, June 2002 See Reverse for Instructions

128 Monroe St. NE • Albuquerque, NM 87108 • (505) 268-8828 • FAX (505) 268-2632

Project# 103429

RIO BRAVO PARTNERS
5160 SAN FRANCISCO NE
ALBUQUERQUE NM 87109

ALDRICH LAND SURVEYING
4109 MONTGOMERY BLVD NE
ALBUQUERQUE NM 87109

MATTHEW ARCHULETA
Westgate Heights Neigh. Assoc.
1628 SUMMERFIELD SW
ALBUQUERQUE NM 87121

LIBBY McINTOSH
Westgate Heights Neigh. Assoc.
1316 LADRONES CT. SW
ALBUQUERQUE NM 87121

KELLY THOMAS
Westgate Vecinos Neigh. Assoc.
1201 JENARO SW
ALBUQUERQUE NM 87121

SYLVANIA HAYES
Westgate Vecinos Neigh. Assoc.
10016 LADRONES SW
ALBUQUERQUE NM 87121

100805422552420101

100805433741210104

100805412043830140

AMAFCA
2600 PROSPECT NE
ALBUQUERQUE NM 87107

CURB INC
6301 INDIAN SCHOOL RD NE
ALBUQUERQUE NM 87110

ARROYO VISTA NEW MEXICO LLC
1880 SANTA BARBARA BL
SAN LUIS OBI CA 93401

100805449520040130

100805544700542202

100805544000542201

AVALON WEST INVESTMENTS LLC
6301 INDIAN SCHOOL RD NE
ALBUQUERQUE NM 87110

LEYBA RUDOLPH R & YVETTE P
10508 CARTAGENA AV SW
ALBUQUERQUE NM 87121

ANDUJO JOSE R & MARIA R
10512 CARTAGENA AV SW
ALBUQUERQUE NM 87121

100805542700542112

100805542100542111

100805541400542110

OLIVAS CLARA M
10600 CARTAGENA AV SW
ALBUQUERQUE NM 87121

OLIVAS JOSE & MARTHA
10604 CARTAGENA SW
ALBUQUERQUE NM 87121

VALLES ABDON & MAGDA B
10608 CARTAGENA AV SW
ALBUQUERQUE NM 87121

100805540800542109

100805540100542108

100805539500542107

VALDEZ LEVI D N
10612 CARTAGENA AV SW
ALBUQUERQUE NM 87121

GUADERRAMA ARTURO
10700 CARTEGENA AV SW
ALBUQUERQUE NM 87121

SALAZAR DAVID A
10704 CARTAGENA SW
ALBUQUERQUE NM 87102

100805538900542106

100805538200542105

100805537700542104

GURULE ROBERT J & JULIA
10708 CARTAGENA AV SW
ALBUQUERQUE NM 87121

OWENS IRMA JEAN
10712 CARTAGENA SW
ALBUQUERQUE NM 87121

GONZALES JOSEPH V & SALLY & K
10800 CARTAGENA AV SW
ALBUQUERQUE NM 87121

100805537000542103

100805536300542102

100805535800542101

MUNOZ JOSE L & ARMIDA CHAVIRA
10804 CARTAGENA AV SW
ALBUQUERQUE NM 87105

GARCIA CHARLES N & BARBARA M
10808 CARTAGENA SW
ALBUQUERQUE NM 87105

BURCIAGA JORGE & SOCORRO
10813 CARTAGENA AV SW
ALBUQUERQUE NM 87121

100805534300542009

100805533700542008

100805533100542007

LUCERO BERT M ETUX
10900 CARTAGENA SW
ALBUQUERQUE NM 87105

VITELA AMADEO & GAYLE
10904 CARTAGENA SW
ALBUQUERQUE NM 87105

TENA LORENZO &
375 SEGOLILY
BOSQUE FARMS NM 87068

100805532500542006

100805531900542005

100805531200542004

TORRES TIMOTHY JOHN &
10912 CARTAGENA SW
ALBUQUERQUE NM 87105

GALLEGOS CAROLINE
PO BOX 7081
ALBUQUERQUE NM 87194

BURCIAGA JORGE & SOCORRO
10813 CARTAGENA AV SW
ALBUQUERQUE NM 87121

100805530200542003

LEYBA SYLVIA
10924 CARTAGENA SW
ALBUQUERQUE NM 87121

100805508032120217

LIBERMAN MAURICE ETAL
2015 WYOMING BL NE
ALBUQUERQUE NM 87112

100805530001242002

CUMMINGS BRUCE D & MARY K
10928 CARTAGENA AV SW
ALBUQUERQUE NM 87121

100905406021530101

SALAZAR FAMILY & JVJ INVESTMENT
PO BOX 1849
ALBUQUERQUE NM 87199

100805528101642001

CONSOLIDATED TRADES INC
1624 MC DONALD NW
ALBUQUERQUE NM 87107

WESTGATE DRAINAGE DAM

AMOLE ARROYO DESIGN OVERLAY ZONE

WALL OVERLAY ZONE R-1/WO

RIO BRAVO

GIBSON

FUTURE GIBSON BLVD.

EL RANCHO GRANDE

SANDY CREEK

SANDY TRAIL

(UNIT 14)

(UNIT 3T)

EL RANCHO GRAND

RIO BRAVO PARTNERS

RIO BRAVO SECTOR DEVELOPMENT

R-D

R-LT

2A

2B

2C

2D

1

A1

B1

16

1003028

1002516

S-95-Z7

S-95-Z7

S-95-Z7

NOTE: GREY SHADING REPRESENTS AREA OUTSIDE OF THE CITY LIMITS

Interstate 25

Interstate 40

Rivers

GRAPHIC SCALE IN FEET

250 0 750 1000

Zone Atlas Page

N-8-Z

Map Amended through December 03, 2004

Albuquerque Geographic Information System
PLANNING DEPARTMENT
© Copyright 2004

FORM S(3): SUBDIVISION .B. MEETING (UNADVERTISED) OR INT AL ROUTING

☐ **SKETCH PLAT REVIEW AND COMMENT** **YOUR ATTENDANCE IS REQUIRED.**

__ Scale drawing of the proposed subdivision plat (folded to fit into an 8.5" by 14" pocket) **6** copies for unadvertised meetings. Sketches are not reviewed through internal routing
__ Site sketch with measurements showing structures, parking, Bldg setbacks, adjacent rights-of-way and street improvements, etcetera, if there is any existing land use (folded to fit into an 8 5" by 14" pocket) **6** copies.
__ Zone Atlas map with the entire property(ies) precisely and clearly outlined and crosshatched (to be photocopied)
__ Letter briefly describing, explaining, and justifying the request
__ Any original and/or related file numbers are listed on the cover application

☐ **MAJOR SUBDIVISION EXTENSION OF PRELIMINARY PLAT** **Your attendance is required.**

__ Preliminary Plat reduced to 8.5" x 11"
__ Zone Atlas map with the entire property(ies) precisely and clearly outlined and crosshatched (to be photocopied)
__ Letter briefly describing, explaining, and justifying the request
__ Copy of previous D.R.B. approved infrastructure list
__ Copy of the LATEST Official D.R.B. Notice of approval for Preliminary Plat Extension request
__ Any original and/or related file numbers are listed on the cover application

Extensions are not reviewed through internal routing.
Extension of preliminary plat approval expires after one year.

☐ **MAJOR SUBDIVISION FINAL PLAT APPROVAL** **Your attendance is required.**

__ Proposed Final Plat (folded to fit into an 8 5" by 14" pocket) **6** copies for unadvertised meetings, **4** copies for internal routing.
__ Design elevations & cross sections of perimeter walls **3 copies**
__ Zone Atlas map with the entire property(ies) precisely and clearly outlined and crosshatched (to be photocopied)
__ Original Mylar drawing of the proposed plat for internal routing only Otherwise, bring Mylar to meeting.
__ Property owner's and City Surveyor's signatures on the Mylar drawing
__ SIA financial guaranty verification
__ Landfill disclosure and EHD signature line on the Mylar drawing if property is within a landfill buffer
__ Any original and/or related file numbers are listed on the cover application
__ **DXF FILE AND HARD COPY OF FINAL PLAT DATA FOR AGIS IS REQUIRED.**

☑ **MINOR SUBDIVISION PRELIMINARY / FINAL PLAT APPROVAL** **Your attendance is required.**

✓ Proposed Preliminary / Final Plat (folded to fit into an 8.5" by 14" pocket) **6** copies for unadvertised meetings, **4** copies for internal routing.
N/A Site sketch with measurements showing structures, parking, Bldg. setbacks, adjacent rights-of-way and street improvements, etcetera, if there is any existing land use (folded to fit into an 8.5" by 14" pocket) **6** copies
✓ Zone Atlas map with the entire property(ies) precisely and clearly outlined and crosshatched (to be photocopied)
✓ Letter briefly describing, explaining, and justifying the request
✓ Original Mylar drawing of the proposed plat for internal routing only Otherwise, bring Mylar to meeting
✓ Property owner's and City Surveyor's signatures on the Mylar drawing
N/A Landfill disclosure and EHD signature line on the Mylar drawing if property is within a landfill buffer
N/A **Signed** Pre-Annexation Agreement if Annexation required.
✓ Fee (see schedule)
✓ Any original and/or related file numbers are listed on the cover application
N/A Infrastructure list if required **(verify with DRB Engineer)** **NO INTERNAL ROUTING**
__ **DXF FILE AND HARD COPY OF FINAL PLAT DATA FOR AGIS IS REQUIRED.** *forthcoming*

☐ **AMENDMENT TO PRELIMINARY PLAT (with minor changes)** **Your attendance is required.**
☐ **AMENDMENT TO INFRASTRUCTURE LIST (with minor changes)**
☐ **AMENDMENT TO GRADING PLAN (with minor changes)**

PLEASE NOTE There are no clear distinctions between significant and minor changes with regard to subdivision amendments Significant changes are those deemed by the DRB to require public notice and public hearing
__ Proposed Amended Preliminary Plat, Infrastructure List, and/or Grading Plan (folded to fit into an 8.5" by 14" pocket) **6** copies for unadvertised meetings.
__ Original Preliminary Plat, Infrastructure List, and/or Grading Plan (folded to fit into an 8.5" by 14" pocket) **6** copies for unadvertised meetings
__ Zone Atlas map with the entire property(ies) precisely and clearly outlined and crosshatched (to be photocopied)
__ Letter briefly describing, explaining, and justifying the request
__ Original Mylar drawing of the proposed amended plat for internal routing only Otherwise, bring Mylar to meeting
__ Property owner's and City Surveyor's signatures on the Mylar drawing, if the plat is being amended
__ Any original and/or related file numbers are listed on the cover application

Amended preliminary plat approval expires after one year

I, the applicant, acknowledge that any information required but not submitted with this application will likely result in deferral of actions.

FRED C. ARFMAN
Applicant name (print)

Fred C. Arfman 12.10.04
Applicant signature / date

Form revised 11/04

☐ Checklists complete
☐ Fees collected
☐ Case #s assigned
☐ Related #s listed

Application case numbers
04DRB-[redacted]
-01892

Planner signature / date 12-10-04

Project # 1003409

PLANNING TRACKING LOG

Date	Project Name & #	Action Request	Action Taken
5/19/04	# 1003427 El Rancho Grande, 16	Sketch	Comments

CITY OF ALUBQUERQUE
PLANNING DEPARTMENT
Development Review Board
May 19, 2004
Comments

ITEM # 23

PROJECT # 1003429 **APPLICATION # 04-00717**

RE: El Rancho Grande Unit 16

The letter from the agent was not descriptive of what is proposed. Planning's comments are reserved for the meeting. Without description, it is difficult to analyze the submittal.

Sheran Matson, AICP DRB Chair
924-3880 fax 924-3864 smatson@cabq.gov

City of Albuquerque
Development Review Board
Hydrology Section

Speed Memo

Project no. 1003429 **Agenda Item no.** 23

Subject:

1. Sketch
2.
3.
4.
5.
6.

Comments:

Drainage report req'd, Infrastructure list.

Resolution:

discussed

Signed: Bradley L Bingham
City Engineer/ AMAFCA Designee

Date: 5/14/04

DEVELOPMENT REVIEW BOARD

UTILITY DEVELOPMENT

Standard Comment Sheet

DRB-1003429 **Item No. 23** **Zone Atlas N-08**

DATE ON AGENDA 5/19/04

INFRASTRUCTURE REQUIRED (X)YES ()NO

CROSS REFERENCE:

TYPE OF APPROVAL REQUESTED: ( ) ANNEXATION

(**X**)SKETCH PLAT ( )PRELIMINARY PLAT ( )FINAL PLAT

( )SITE PLAN REVIEW AND COMMENT ( )SITE PLAN FOR SUBDIVISION

( )SITE PLAN FOR BUILDING PERMIT

No.	Comment

1. Delgado Drive needs to extend through to Gibson. This is the corridor for the 20" top of zone 2w water line. No services can be connected to this line, so it can not be located in local streets.
2. No lots with pad elevations higher than elevation 5255 can be served. Lots north of Gibson and west of Delgado can not be developed.
3. A water/sewer availability statement must be requested and issued prior to Preliminary Plat approval.

If you have any questions or comments please call Roger Green at 924-3989.

City of Albuquerque

P.O. BOX 1293 ALBUQUERQUE, NEW MEXICO 87103

DEVELOPMENT REVIEW BOARD

TRANSPORTATION DEVELOPMENT

Standard Comment Sheet

DRB-1003429 **Item No. 23** **Zone Atlas N-8**

DATE ON AGENDA 5-19-04

INFRASTRUCTURE REQUIRED (X)YES ( )NO

CROSS REFERENCE: _____

_____

TYPE OF APPROVAL REQUESTED:

(X)SKETCH PLAT ( )PRELIMINARY PLAT ( )FINAL PLAT

( )SITE PLAN REVIEW AND COMMENT ( )SITE PLAN FOR SUBDIVISION

( )SITE PLAN FOR BUILDING PERMIT

No.	Comment

1) Standard infrastructure req'd.
2) Need traffic distribution map to verify right-of-way widths.
3) Number of lots is above threshold for a TIS. Has this process begun?
4) Major locals will require 6' sidewalk. Also, pedestrian access points need to be considered.
5) Blocks I, E and J are too long.
6) Ensure sight distance onto Gibson (500') and other major locals is met.

If you have any questions or comments please call Wilfred Gallegos at 924-3991. Meeting notes:

THE CITY OF ALBUQUERQUE IS AN EQUAL OPPORTUNITY/REASONABLE ACCOMMODATION EMPLOYER

City of Albuquerque
Parks and Recreation Department

PO Box 1293, Albuquerque, New Mexico 87103
Inter-Office Correspondence

Development Review Board Comments

Project Number: 1003429
Application Number: 04DRB-00717

DRB Date: 5/19/04
Item Number: 23

Subdivision:
Lot 1, Rio Bravo Partners, El Rancho Grande, Unit 16

Request for:
- [x] Sketch Plat Review & Comment
- [ ] Bulk Land Variance
- [ ] Site Development Plan for Subdivision
- [ ] Site Development Plan for Building Permit
- [ ] Preliminary Plat
- [ ] Final Plat
- [ ] Vacation of Public RoW
- [ ] Vacation of Public Easement
- [ ] Vacation of Private Easement
- [ ] Temp. Deferral of Sidewalk Construction
- [ ] Sidewalk Variance
- [ ] SIA Extension
- [ ] Other

Zoning: R-1

Zone Page: N-08

New Lots (or units) : 0

Parks and Recreation Comments:

This platting action is covered under an existing agreement for El Rancho Grande, in which an approximatly 6 acre park was dedicated.

The park development requirement will be met via the payment of a fee prior to issuance of building permit for each new dwelling unit.

What is tract A?

Signed: CS

Christina Sandoval, (DMD)

Phone: 768-3808

City of Albuquerque

DEVELOPMENT/ PLAN REVIEW APPLICATION

Supplemental form

SUBDIVISION S

- ✓ Major Subdivision action
- ✓ Minor Subdivision action
- ___ Vacation V
- ✓ Variance (Non-Zoning)

SITE DEVELOPMENT PLAN P

- ___ ..for Subdivision Purposes
- ___ ...for Building Permit
- ___ IP Master Development Plan
- ___ Cert. of Appropriateness (LUCC) L

Supplemental form

ZONING & PLANNING Z

- ___ Annexation
  - ___ County Submittal
  - ___ EPC Submittal
- ___ Zone Map Amendment (Establish or Change Zoning)
- ___ Sector Plan (Phase I, II, III)
- ___ Amendment to Sector, Area, Facility or Comprehensive Plan
- ___ Text Amendment (Zoning Code/Sub Regs)

APPEAL / PROTEST of... A

- ___ Decision by: DRB, EPC, LUCC, Planning Director or Staff, ZHE, Zoning Board of Appeals

PRINT OR TYPE IN BLACK INK ONLY. The applicant or agent must submit the completed application in person to the Planning Department Development Services Center, 600 2nd Street NW, Albuquerque, NM 87102. Fees must be paid at the time of application. Refer to supplemental forms for submittal requirements.

APPLICANT INFORMATION:

NAME: RIO BRAVO PARTNERS PHONE: 881-9190
ADDRESS: 5160 SAN FRANCISCO NE FAX: 875-1723
CITY: ABQ STATE NM ZIP 87109 E-MAIL:
Proprietary interest in site: OWNER List all owners:
AGENT (if any): ALDRICH LAND SURVEYING PHONE: 884-1990
ADDRESS: 4109 MONTGOMERY BLVD. NE FAX: 884-1140
CITY: ABQ STATE NM ZIP 87109 E-MAIL:
DESCRIPTION OF REQUEST: BULK LAND PLAT SUBMITTAL

Is the applicant seeking incentives pursuant to the Family Housing Development Program? ___ Yes. X No.

SITE INFORMATION: ACCURACY OF THE LEGAL DESCRIPTION IS CRUCIAL! ATTACH A SEPARATE SHEET IF NECESSARY.

Lot or Tract No. ① PARCEL 1 ② TRACT 16 Block: ___ Unit: ③ PORTION OF WEST GATE DRAINAGE DAM
Subdiv. / Addn. RIO BRAVO PARTNERS EL RANCHO GRANDE, UNIT 14
Current Zoning: R-D Proposed zoning: RLT DRNG R.O.W.
Zone Atlas page(s) N-8 No. of **existing** lots: 2 No. of **proposed** lots. 2
Total area of site (acres): 121.173 Density if applicable: dwellings per gross acre: N/A dwellings per net acre: N/A
Within city limits? X Yes. No___, but site is within 5 miles of the city limits.) Within 1000FT of a landfill? NO
UPC No ④ 100805433741210104 MRGCD Map No N/A
LOCATION OF PROPERTY BY STREETS: On or Near: WEST TERMINUS OF GIBSON BLVD. S.W
Between: MESSINA DR. and DELGADO DR.

CASE HISTORY:

List any current or prior case number that may be relevant to your application (Proj., App., DRB-, AX_,Z_, V_, S_, etc.): 1003099

Check-off if project was previously reviewed by Sketch Plat/Plan ☐, or Pre-application Review Team ☐. Date of review: ___

SIGNATURE Fred C. Aldrich FOR ALDRICH LAND SURVEYING DATE 12.10.04
(Print) FRED C. ALDRICH ___ Applicant X Agent

Form revised 9/01, 3/03, 7/03, 10/03, 3/04

FOR OFFICIAL USE ONLY

☐ INTERNAL ROUTING
☑ All checklists are complete
☑ All fees have been collected
☑ All case #s are assigned
☑ AGIS copy has been sent
☑ Case history #s are listed
☐ Site is within 1000ft of a landfill
☐ F.H.D.P. density bonus
☐ F.H.D.P. fee rebate

Application case numbers	Action	S.F.	Fees
04DRB - 01891	BLV		$ 145.00
04DRB - 01892	P&F		$ 285.00
	CMF		$ 20.00
	AD Fee		$ 75.00
			$
			Total $ 525.00

Hearing date 1-5-05

Bobbie Lund 12-10-04
Planner signature / date

Project # 1003429

FORM V: SUBDIVISION VARIANCES & VACATIONS

☑ **BULK LAND VARIANCE** **(Public Hearing Case)**

✓ Application for subdivision (Plat) on FORM S-3, including those submittal requirements. Variance and subdivision should be applied for simultaneously.

✓ Letter briefly describing and explaining: the request, compliance with criteria in the Development Process Manual, and any improvements to be waived.

✓ Notice on the proposed Plat that there are conditions to subsequent subdivision (refer to DPM)

✓ Office of Community & Neighborhood Coordination inquiry response, notifying letter, certified mail receipts

__ Sign Posting Agreement

✓ Fee (see schedule) Fee is for Variance. Plat fee is listed on FORM-S.

✓ Any original and/or related file numbers are listed on the cover application

DRB Public hearings are approximately ONE MONTH after the filing deadline. <u>Your attendance is required.</u>

❑ **VACATION OF PUBLIC RIGHT-OF-WAY**

❑ **VACATION OF PUBLIC EASEMENT**

__ The complete document which created the public easement (folded to fit into an 8.5" by 14" pocket) **24** copies. (Not required for dedicated and City owned public right-of-way.)

__ Drawing showing the easement or right-of-way to be vacated, its relation to existing streets, etc. (folded to fit into an 8.5" by 14" pocket) **24** copies

__ Zone Atlas map with the entire property(ies) precisely and clearly outlined and crosshatched (to be photocopied)

__ Letter briefly describing, explaining, and justifying the request

__ Office of Community & Neighborhood Coordination inquiry response, notifying letter, certified mail receipts

__ Sign Posting Agreement

__ Fee (see schedule)

__ Any original and/or related file numbers are listed on the cover application

Unless the vacation is shown on a DRB approved plat recorded by the County Clerk within one year, it will expire.

DRB Public hearings are approximately ONE MONTH after the filing deadline. <u>Your attendance is required.</u>

❑ **SUBDIVISION DESIGN VARIANCE (VARIANCE FROM MINIMUM STANDARDS OF THE DEVELOPMENT PROCESS MANUAL)**

❑ **SIDEWALK DESIGN VARIANCE**

❑ **SIDEWALK WAIVER**

__ Scale drawing showing the proposed variance or waiver (folded to fit into an 8.5" by 14" pocket) **6** copies for unadvertised meetings. These actions are not approved through internal routing.

__ Zone Atlas map with the entire property(ies) precisely and clearly outlined and crosshatched (to be photocopied)

__ Letter briefly describing, explaining, and justifying the variance or waiver

__ Any original and/or related file numbers are listed on the cover application

DRB meetings are approximately 8 DAYS after the Tuesday noon filing deadline. <u>Your attendance is required.</u>

❑ **TEMPORARY DEFERRAL OF SIDEWALK CONSTRUCTION**

❑ **EXTENSION OF THE SIA FOR TEMPORARY DEFERRAL OF SIDEWALK CONSTRUCTION**

__ Drawing showing the sidewalks subject to the proposed deferral or extension (folded to fit into an 8.5" by 14" pocket) **6** copies for unadvertised meetings. These actions are not approved through internal routing.

__ Zone Atlas map with the entire property(ies) precisely and clearly outlined and crosshatched (to be photocopied)

__ Letter briefly describing, explaining, and justifying the deferral or extension

__ Any original and/or related file numbers are listed on the cover application

DRB meetings are approximately 8 DAYS after the Tuesday noon filing deadline. <u>Your attendance is required.</u>

❑ **VACATION OF PRIVATE EASEMENT**

__ The complete document which created the private easement (folded to fit into an 8.5" by 14" pocket) **6** copies for unadvertised meetings. These actions are not approved through internal routing.

__ Scale drawing showing the easement to be vacated, its relation to existing streets, etc (folded to fit into an 8.5" by 14" pocket) **6** copies

__ Zone Atlas map with the entire property(ies) precisely and clearly outlined and crosshatched (to be photocopied)

__ Letter briefly describing, explaining, and justifying the vacation

__ Letter of authorization from the grantors and the beneficiaries

__ Fee (see schedule)

__ Any original and/or related file numbers are listed on the cover application

Unless the vacation is shown on a DRB approved plat recorded by the County Clerk within one year, it will expire.

DRB meetings are approximately 8 DAYS after the Tuesday noon filing deadline. <u>Your attendance is required.</u>

I, the applicant, acknowledge that any information required but not submitted with this application will likely result in deferral of actions.

FRED C. ARFMAN
Applicant name (print)

Fred C. Arfman 12.10.04
Applicant signature / date

Form revised April 2003

☐ Checklists complete
☐ Fees collected
☐ Case #s assigned
☐ Related #s listed

Application case numbers
04DRB 01891
____ - ____ - ____
____ - ____ - ____

12-10-04
Planner signature / date

Project # 1003429

FORM S(3): SUBDIVISION - D.R.B. MEETING (UNADVERTISED) OR INTERNAL ROUTING

☐ **SKETCH PLAT REVIEW AND COMMENT** **YOUR ATTENDANCE IS REQUIRED.**

__ Scale drawing of the proposed subdivision plat (folded to fit into an 8.5" by 14" pocket) **6** copies for unadvertised meetings. Sketches are not reviewed through internal routing.
__ Site sketch with measurements showing structures, parking, Bldg. setbacks, adjacent rights-of-way and street improvements, etcetera, if there is any existing land use (folded to fit into an 8.5" by 14" pocket) **6** copies.
__ Zone Atlas map with the entire property(ies) precisely and clearly outlined and crosshatched (to be photocopied)
__ Letter briefly describing, explaining, and justifying the request
__ Any original and/or related file numbers are listed on the cover application

☐ **MAJOR SUBDIVISION EXTENSION OF PRELIMINARY PLAT** **Your attendance is required.**

__ Preliminary Plat reduced to 8.5" x 11"
__ Zone Atlas map with the entire property(ies) precisely and clearly outlined and crosshatched (to be photocopied)
__ Letter briefly describing, explaining, and justifying the request
__ Copy of previous D.R.B. approved infrastructure list
__ Copy of the LATEST Official D.R.B. Notice of approval for Preliminary Plat Extension request
__ Any original and/or related file numbers are listed on the cover application

Extensions are not reviewed through internal routing.
Extension of preliminary plat approval expires after one year.

☐ **MAJOR SUBDIVISION FINAL PLAT APPROVAL** **Your attendance is required.**

__ Proposed Final Plat (folded to fit into an 8.5" by 14" pocket) **6** copies for unadvertised meetings, **4** copies for internal routing.
__ Design elevations & cross sections of perimeter walls **3 copies**
__ Zone Atlas map with the entire property(ies) precisely and clearly outlined and crosshatched (to be photocopied)
__ Original Mylar drawing of the proposed plat for internal routing only. Otherwise, bring Mylar to meeting.
__ Property owner's and City Surveyor's signatures on the Mylar drawing
__ SIA financial guaranty verification
__ Landfill disclosure and EHD signature line on the Mylar drawing if property is within a landfill buffer
__ Any original and/or related file numbers are listed on the cover application
__ **DXF FILE AND HARD COPY OF FINAL PLAT DATA FOR AGIS IS REQUIRED.**

☑ **MINOR SUBDIVISION PRELIMINARY / FINAL PLAT APPROVAL** **Your attendance is required.**

✓ Proposed Preliminary / Final Plat (folded to fit into an 8.5" by 14" pocket) **6** copies for unadvertised meetings, **4** copies for internal routing.
N/A Site sketch with measurements showing structures, parking, Bldg. setbacks, adjacent rights-of-way and street improvements, etcetera, if there is any existing land use (folded to fit into an 8.5" by 14" pocket) **6** copies.
✓ Zone Atlas map with the entire property(ies) precisely and clearly outlined and crosshatched (to be photocopied)
✓ Letter briefly describing, explaining, and justifying the request
✓ Original Mylar drawing of the proposed plat for internal routing only. Otherwise, bring Mylar to meeting.
✓ Property owner's and City Surveyor's signatures on the Mylar drawing
N/A Landfill disclosure and EHD signature line on the Mylar drawing if property is within a landfill buffer
N/A **Signed** Pre-Annexation Agreement if Annexation required.
✓ Fee (see schedule)
✓ Any original and/or related file numbers are listed on the cover application
N/A Infrastructure list if required **(verify with DRB Engineer)** **NO INTERNAL ROUTING**
__ **DXF FILE AND HARD COPY OF FINAL PLAT DATA FOR AGIS IS REQUIRED.** forthcoming

☐ **AMENDMENT TO PRELIMINARY PLAT (with minor changes)** **Your attendance is required.**
☐ **AMENDMENT TO INFRASTRUCTURE LIST (with minor changes)**
☐ **AMENDMENT TO GRADING PLAN (with minor changes)**

PLEASE NOTE: There are no clear distinctions between significant and minor changes with regard to subdivision amendments. Significant changes are those deemed by the DRB to require public notice and public hearing.

__ Proposed Amended Preliminary Plat, Infrastructure List, and/or Grading Plan (folded to fit into an 8.5" by 14" pocket) **6** copies for unadvertised meetings.
__ Original Preliminary Plat, Infrastructure List, and/or Grading Plan (folded to fit into an 8.5" by 14" pocket) **6** copies for unadvertised meetings
__ Zone Atlas map with the entire property(ies) precisely and clearly outlined and crosshatched (to be photocopied)
__ Letter briefly describing, explaining, and justifying the request
__ Original Mylar drawing of the proposed amended plat for internal routing only. Otherwise, bring Mylar to meeting.
__ Property owner's and City Surveyor's signatures on the Mylar drawing, if the plat is being amended
__ Any original and/or related file numbers are listed on the cover application

Amended preliminary plat approval expires after one year

I, the applicant, acknowledge that any information required but not submitted with this application will likely result in deferral of actions.

FRED C. ARFMAN
Applicant name (print)

Fred C. Arfman 12.10.04
Applicant signature / date

Form revised 11/04

☐ Checklists complete
☐ Fees collected
☐ Case #s assigned
☐ Related #s listed

Application case numbers
04DRB-[redacted]
-01892

Planner signature / date 12-10-04

Project # 1003429

WESTGATE DRAINAGE DAM

SP-93-200

AMOLE ARROYO DESIGN OVERLAY ZONE

WALL OVERLAY ZONE R-1/WO

RIO BRAVO

GIBSON

FUTURE GIBSON BLVD.

SANDY RIDGE

SANDY CREEK

SANDY TRAIL

EL RANCHO GRANDE UNIT 14

EL RANCHO GRAND

R-D

R-LT

A1

2A

2B

2C

2D

1

16

B1

S-95-27

SP-98-123

S-93-27

1003028

1002818

RIO BRAVO SECTOR DEVELOPMENT

ANT. BOUNDARY

RIO BRAVO PARTNERS

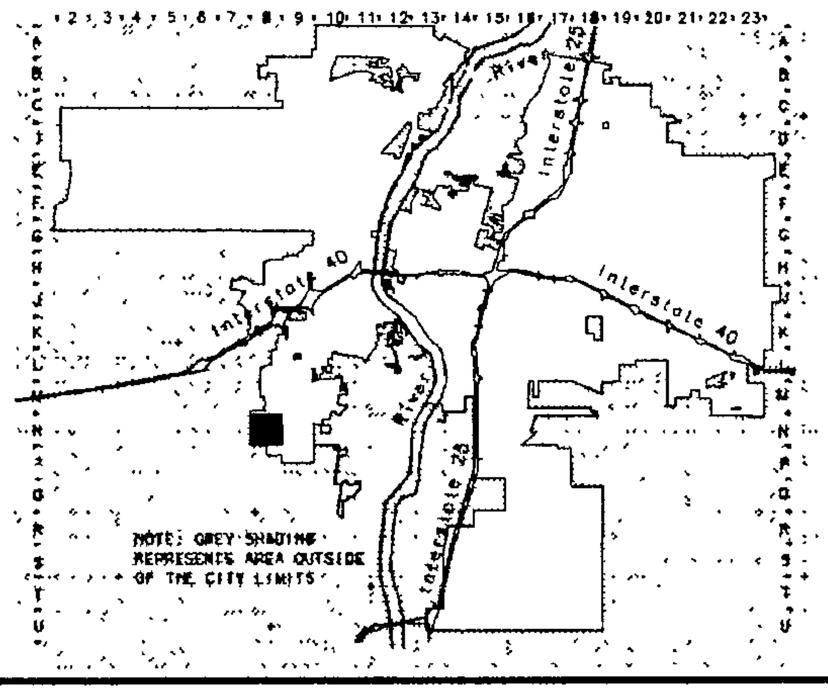

CITY OF ALBUQUERQUE · NEW MEXICO · 1706

GRAPHIC SCALE IN FEET

250 0 750 1000

Zone Atlas Page

N-8-Z

Map Amended through December 03, 2004

Albuquerque Geographic Information System

PLANNING DEPARTMENT

© Copyright 2004

PROJECT MEMORANDUM

12/10/04

TO: Ms. Sheran Matson, DRB Chair, Planning Dept., City of Albuquerque

FROM: Fred C. Arfman, Isaacson & Arfman, P.A.

REF: Parcel 1, Rio Bravo Partners ***I&A PROJ NO:*** 1349

SUBJ: Bulk Land Plat Justification

A Bulk Land Plat Variance is being requested from the Development Review Board as a necessary procedural step in the development of the referenced property.

The properties must first be assembled and simultaneously divided along the right-of-way of Gibson Blvd. to create two distinct tracts capable of being developed as "stand along" subdivisions.

The dedication of Gibson Blvd. by this plat is shown on the subject plat and the construction and/or financial guarantee is requested to be waiver by this action and shall be placed on the subsequent infrastructure list of the adjacent subdivisions.

There are no vacation actions attached to this request.

ALBUQUERQUE
Making History

City of Albuquerque
P.O. Box 1293, Albuquerque, NM 87103

PLEASE NOTE: The Neighborhood Association information listed in this letter is valid for one (1) month. If you haven't filed your application within one (1) month of the date of this letter – you will need to get an updated letter from our office. It is your responsibility to provide current information – outdated information may result in a deferral of your case.

December 9, 2004

Ruth Lozano
Isaacson & Arfman, P.A.
128 Monroe St. NE / 87108
Phone: 268-8828 Fax: 268-2632

Dear Ruth:

Thank you for your inquiry of **December 9, 2004,** requesting the names of Recognized Neighborhood Associations who would be affected under the provisions of O-92 by your proposed project at **TRACT 1, RIO BRAVO PARTNERS TOGETHER WITH A PORTION OF WESTGATE DRAINAGE DAM LOCATED NEAR RIO BRAVO** zone map **N-8**

Our records indicate that the Recognized Neighborhood Association(s) affected by this proposal and the contact names are as follows:

SEE "ATTACHMENT A" FOR NEIGHBORHOOD INFORMATION.

Please note that according to O-92 you are required to notify each of these contact persons by **certified mail, return receipt requested, before** the Planning Department will accept your application filing. **IMPORTANT! Failure of adequate notification may result in your Application Hearing being deferred for 30 days.** If you have any questions about the information provided, please contact me at (505) 924-3914 or via an e-mail message at juliaking@cabq.gov or by fax at (505) 924-3913.

Sincerely,

Julia King

Julia King
Senior Office Assistant
OFFICE OF NEIGHBORHOOD COORDINATION
Planning Department

planningrnaform(10/27/04)

"Attachment A"

ISAACSON & ARFMAN, RUTH LOZANO
Zone Map: N-8

Westgate Heights NA (R)
***Matthew Archuleta**
1628 Summerfield SW / 87121 836-7251 (h)
Libby McIntosh
1316 Ladrones Ct. SW / 87121 831-5189 (h)

<u>ALTHOUGH YOU</u> <u>ARE NOT "OFFICIALLY REQUIRED"</u> BY O-92, you are most welcomed to notify the following *"Unrecognized"* neighborhood associations of this project.

Westgate Vecinos
***Kelly Thomas**
1201 Jenaro SW / 87121 831-5242 (h)
Sylvia Hayes
10016 Ladrones SW / 87121 836-7358 (h)

<u>LETTERS MUST BE SENT TO BOTH CONTACTS OF EACH NEIGHBORHOOD ASSOCIATION</u>.

ISAACSON & ARFMAN, P.A.
Consulting Engineering Associates
Thomas O. Isaacson, PE & LS • Fred C. Arfman, PE
Scott M. McGee, PE

December 9, 2004 Certified Mail 7003 3110 0006 0529 2063

Ms. Sylvia Hayes
Westgate Vecinos
10016 Ladrones SW
Albuquerque, NM 87121

RE: El Rancho Grande Subdivision Unit 16
(Legal Description -- Parcel 1, Rio Bravo Partners, Tract 16, El Rancho Grande, Unit 14, together with a portion of Westgate Drainage Dam)

Dear Ms. Hayes:

As the consulting engineers for the above referenced site, we are writing this letter to inform the Westgate Vecinos that a request for Bulk Land Plat Variance (121.1730 Ac.) will be submitted to the Development Review Board this week. See attached zone map.

Please call our office at 268-8828 if you need additional information.

Sincerely,

ISAACSON & ARFMAN, P.A.

Fred C. Arfman, PE
FCA/rtl
Attachment

7003 3110 0006 0529 2063

7003 3110 0006 0529 2063

U.S. Postal Service™
CERTIFIED MAIL™ RECEIPT
(Domestic Mail Only; No Insurance Coverage Provided)

For delivery information visit our website at www.usps.com®

OFFICIAL USE

ALBUQUERQUE, NM 87121

Postage	$ 0.37	UNIT ID: 0108
Certified Fee	2.30	
Return Reciept Fee (Endorsement Required)	1.75	Postmark Here
Restricted Delivery Fee (Endorsement Required)		Clerk: KZ4YYX
Total Postage & Fees	$ 4.42	12/09/04

Sent To: Sylvia Hayes
Westgate Vecinos
Street, Apt. No.; or PO Box No.: 10016 Ladrones SW
City, State, ZIP+4: Albuquerque, NM 87121

PS Form 3800, June 2002 See Reverse for Instructions

128 Monroe St. NE • Albuquerque, NM 87108 • (505) 268-8828 • FAX (505) 268-2632

M:\ACTIVE\PROJECT DOCUMENTS\1349\CORRESPONDENCE\OUT\1349 NA-ltr 12-09-04.doc

ISAACSON & ARFMAN, P.A.

Consulting Engineering Associates

Thomas O. Isaacson, PE & LS • Fred C. Arfman, PE
Scott M. McGee, PE

December 9, 2004 Certified Mail 7003 3110 0006 0529 2056

Kelly Thomas
Westgate Vecinos
1201 Jenaro SW
Albuquerque, NM 87121

RE: El Rancho Grande Subdivision Unit 16
(Legal Description -- Parcel 1, Rio Bravo Partners, Tract 16, El Rancho Grande, Unit 14, together with a portion of Westgate Drainage Dam)

Dear Kelly Thomas:

As the consulting engineers for the above referenced site, we are writing this letter to inform the Westgate Vecinos that a request for Bulk Land Plat Variance (121.1730 Ac.) will be submitted to the Development Review Board this week. See attached zone map.

Please call our office at 268-8828 if you need additional information.

Sincerely,
ISAACSON & ARFMAN, P.A.

Fred C. Arfman, PE
FCA/rtl
Attachment
7003 3110 0006 0529 2056

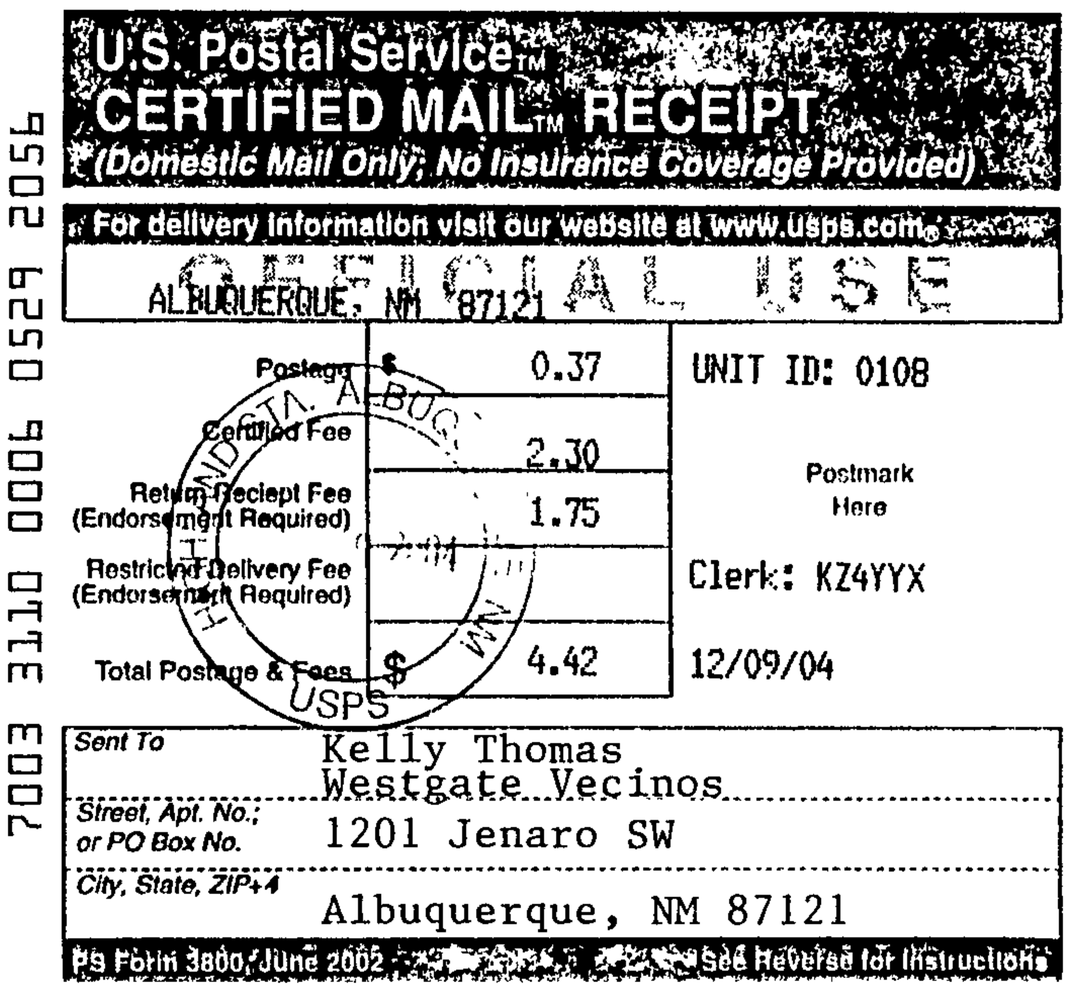

128 Monroe St. NE • Albuquerque, NM 87108 • (505) 268-8828 • FAX (505) 268-2632

ISAACSON & ARFMAN, P.A.
Consulting Engineering Associates
Thomas O. Isaacson, PE & LS • Fred C. Arfman, PE
Scott M. McGee, PE

December 9, 2004 Certified Mail 7003 3110 0006 0529 2049

Ms. Libby McIntosh
Westgate Heights Neighborhood Association
1316 Ladrones Ct. SW
Albuquerque, NM 87121

RE: El Rancho Grande Subdivision Unit 16
(Legal Description -- Parcel 1, Rio Bravo Partners, Tract 16, El Rancho Grande, Unit 14, together with a portion of Westgate Drainage Dam)

Dear Ms. McIntosh:

As the consulting engineers for the above referenced site, we are writing this letter to inform the Westgate Heights Neighborhood Association that a request for Bulk Land Plat Variance (121.1730 Ac.) will be submitted to the Development Review Board this week. See attached zone map.

Please call our office at 268-8828 if you need additional information.

Sincerely,
ISAACSON & ARFMAN, P.A.

Fred C. Arfman, PE
FCA/rtl
Attachment
7003 3110 0006 0529 2049

7003 3110 0006 0529 2049

U.S. Postal Service™
CERTIFIED MAIL™ RECEIPT
(Domestic Mail Only; No Insurance Coverage Provided)
For delivery information visit our website at www.usps.com
ALBUQUERQUE, NM 87121 OFFICIAL USE

Postage	$ 0.37	UNIT ID: 0108
Certified Fee	2.30	Postmark Here
Return Receipt Fee (Endorsement Required)	1.75	
Restricted Delivery Fee (Endorsement Required)		Clerk: KZ4YYX
Total Postage & Fees	$ 4.42	12/09/04

Sent To: Libby McIntosh
Westgate Heights NA
Street, Apt. No.; or PO Box No.: 1316 Ladrones Ct. SW
City, State, ZIP+4: Albuquerque, NM 87121
PS Form 3800, June 2002 See Reverse for Instructions

ISAACSON & ARFMAN, P.A.

Consulting Engineering Associates

Thomas O. Isaacson, PE & LS • Fred C. Arfman, PE
Scott M. McGee, PE

December 9, 2004 Certified Mail 7003 3110 0006 0529 2032

Mr. Matthew Archuleta
Westgate Heights Neighborhood Association
1628 Summerfield SW
Albuquerque, NM 87121

RE: El Rancho Grande Subdivision Unit 16
(Legal Description -- Parcel 1, Rio Bravo Partners, Tract 16, El Rancho Grande, Unit 14, together with a portion of Westgate Drainage Dam)

Dear Mr. Archuleta:

As the consulting engineers for the above referenced site, we are writing this letter to inform the Westgate Heights Neighborhood Association that a request for Bulk Land Plat Variance (121.1730 Ac.) will be submitted to the Development Review Board this week. See attached zone map.

Please call our office at 268-8828 if you need additional information.

Sincerely,
ISAACSON & ARFMAN, P.A.

Fred C. Arfman, PE
FCA/rtl
Attachment
7003 3110 0006 0529 2032

7003 3110 0006 0529 2032

U.S. Postal Service™
CERTIFIED MAIL™ RECEIPT
(Domestic Mail Only; No Insurance Coverage Provided)
For delivery information visit our website at www.usps.com
OFFICIAL USE
ALBUQUERQUE, NM 87121

Postage	$ 0.37	UNIT ID: 0108
Certified Fee	2.30	Postmark Here
Return Reciept Fee (Endorsement Required)	1.75	
Restricted Delivery Fee (Endorsement Required)		Clerk: KZ4YYX
Total Postage & Fees	$ 4.42	12/09/04

Sent To: Matthew Archuleta
Westgate Heights NA
Street, Apt. No.; or PO Box No.: 1628 Summerfield SW
City, State, ZIP+4: Albuquerque, NM 87121

PS Form 3800, June 2002 See Reverse for Instructions

128 Monroe St. NE • Albuquerque, NM 87108 • (505) 268-8828 • FAX (505) 268-2632

ONE STOP SHOP
CITY OF ALBUQUERQUE PLANNING DEPARTMENT
Development & Building Services

PAID RECEIPT

APPLICANT NAME Rio Bravo Partners

AGENT Aldrich Land Surveyors

ADDRESS 4109 Montgomery NE

PROJECT & APP # _____

PROJECT NAME Rio Bravo Partners / El Ranch Grande #1334 & Port. of W. Gate Drain.

$ 20.00 441032/3424000 Conflict Management Fee

$ 430. 441006/4983000 DRB Actions

$ _____ 441006/4971000 EPC/AA/LUCC Actions & All Appeals

$ 75.00 441018/4971000 Public Notification

$ _____ 441006/4983000 DRAINAGE PLAN REVIEW OR TRAFFIC IMPACT STUDY***
( )Major/Minor Subdivision ( )Site Development Plan ( )Bldg Permit
( ) Letter of Map Revision ( )Conditional Letter of Map Revision
( ) Traffic Impact Study

$ 525.00 TOTAL AMOUNT DUE

***_NOTE_: *If a subsequent submittal is required, bring a copy of this paid receipt with you to avoid an* **additional charge.**

268-8828

ISAACSON AND ARFMAN, P.A.
128 MONROE ST. NE
ALBUQUERQUE, NM 87108

16216

DATE 12/10/04 95-219/1070 176 1350743997

PAY TO THE ORDER OF City of Albuquerque $ 525.00

FIVE-HUNDRED & TWENTY-FIVE & 00/100 DOLLARS

Security Features Included. Details on Back.

WELLS FARGO
Wells Fargo Bank, N.A.
200 Lomas NW
Albuquerque, NM 87102
wellsfargo.com

FOR 1349-X DRB Submittal fee

Fred C. Arfman

MP

⑈016216⑈ ⑆107002192⑆ 1350743997⑈

DELUXE - PMB

City Of Albuquerque
Treasury Division

12/10/2004 10:16AM LOC: ANN

X

RECEIPT# 00033083 WS# 008 TRANS# 0008

Account 441006 Fund 0110

Activity 4983000 TRSKAL

Trans Amt $525.00

J24 Misc $430.00

Thank You

City Of Albuquerque
Treasury Division

12/10/2004 10:16AM LOC: ANN

X

RECEIPT# 00033084 WS# 008 TRANS# 0008

Account 441018 Fund 0110

Activity 4971000 TRSKAL

Trans Amt $525.00

J24 Misc $75.00

CK $525.00

CHANGE $0.00

Thank You

City Of Albuquerque
Treasury Division

12/10/2004 10:16AM LOC: ANN

X

RECEIPT# 00033082 WS# 008 TRANS# 0008

Account 441032 Fund 0110

Activity 3424000 TRSKAL

Trans Amt $525.00

J24 Misc $20.00

Thank You

SIGN POSTING AGREEMENT

REQUIREMENTS

POSTING SIGNS ANNOUNCING PUBLIC HEARINGS

All persons making application to the City under the requirements and procedures established by the City Zoning Code or Subdivision Ordinance are responsible for the posting and maintaining of one or more signs on the property which the application describes. Vacations of public rights-of-way (if the way has been in use) also require signs. Waterproof signs are provided at the time of application. If the application is mailed, you must still stop at the Development Services Front Counter to pick up the sign.

The applicant is responsible for ensuring that the signs remain posted throughout the 15-day period prior to public hearing. Failure to maintain the signs during this entire period may be cause for deferral or denial of the application. Replacement signs for those lost or damaged are available from the Development Services Front Counter at a charge of $3.50 each.

1. LOCATION

   A. The sign shall be conspicuously located. It shall be located within twenty feet of the public sidewalk (or edge of public street). Staff may indicate a specific location.
   B. The face of the sign shall be parallel to the street, and the bottom of the sign shall be at least two feet from the ground.
   C. No barrier shall prevent a person from coming within five feet of the sign to read it.

2. NUMBER

   A. One sign shall be posted on each paved street frontage. Signs may be required on unpaved street frontages.
   B. If the land does not abut a public street, then, in addition to a sign placed on the property, a sign shall be placed on and at the edge of the public right-of-way of the nearest paved City street. Such a sign must direct readers toward the subject property by an arrow and an indication of distance.

3. PHYSICAL POSTING

   A. A heavy stake with two crossbars or a full plywood backing works best to keep the sign in place, especially during high winds.
   B. Large headed nails or staples are best for attaching signs to a post or backing; the sign tears out less easily.

4. TIME

Signs must be posted from 12-21-04 To 1-5-05

5. REMOVAL

   A. The sign is not to be removed before the initial hearing on the request.
   B. The sign should be removed within five (5) days after the initial hearing.

I have read this sheet and discussed it with the Development Services Front Counter Staff. I understand (A) my obligation to keep the sign(s) posted for (15) days and (B) where the sign(s) are to be located. I am being given a copy of this sheet.

F. Cayon — 12-10-04
(Applicant or Agent) (Date)

I issued 1 signs for this application, 12-10-04 (Date), [signature] (Staff Member)

DRB PROJECT NUMBER: 1003429

Rev. 5/9/03

City of Albuquerque

DEVELOPMENT/ PLAN REVIEW APPLICATION

Supplemental form

SUBDIVISION **S**

____ Major Subdivision action
X Minor Subdivision action
____ Vacation **V**
____ Variance (Non-Zoning)

SITE DEVELOPMENT PLAN **P**

____ ...for Subdivision Purposes
____ ...for Building Permit
____ IP Master Development Plan
____ Cert. of Appropriateness (LUCC) **L**

Supplemental form

ZONING & PLANNING **Z**

____ Annexation
____ County Submittal
____ EPC Submittal
____ Zone Map Amendment (Establish or Change Zoning)
____ Sector Plan (Phase I, II, III)
____ Amendment to Sector, Area, Facility or Comprehensive Plan
____ Text Amendment (Zoning Code/Sub Regs)

APPEAL / PROTEST of... **A**

____ Decision by: DRB, EPC, LUCC, Planning Director or Staff, ZHE, Zoning Board of Appeals

PRINT OR TYPE IN BLACK INK ONLY. The applicant or agent must submit the completed application in person to the Planning Department Development Services Center, 600 2nd Street NW, Albuquerque, NM 87102. Fees must be paid at the time of application. Refer to supplemental forms for submittal requirements.

APPLICANT INFORMATION:

NAME: CURB INC. PHONE: 881-9190
ADDRESS: 5160 SAN FRANCISCO NE FAX: 888-1831
CITY: ABQ STATE NM ZIP 87109 E-MAIL:

Proprietary interest in site: OWNER List all owners: CURB INC.

AGENT (if any): ISAACSON & ARFMAN, P.A. PHONE: 268-8828
ADDRESS: 128 MONROE ST. NE FAX: 268-2632
CITY: ABQ STATE NM ZIP 87108 E-MAIL: 12MENGR@SWCP.COM

DESCRIPTION OF REQUEST: SKETCH OF VACANT INCORPORATED LAND WITHIN THE SOUTHWEST MESA

Is the applicant seeking incentives pursuant to the Family Housing Development Program? ___ Yes. ___ No. UNKNOWN AT THIS TIME.

SITE INFORMATION: ACCURACY OF THE LEGAL DESCRIPTION IS CRUCIAL! ATTACH A SEPARATE SHEET IF NECESSARY.

Lot or Tract No. LOT 1 Block: Unit:
Subdiv. / Addn. RIO BRAVO PARTNERS / EL RANCHO GRANDE, UNIT 14
Current Zoning: R-1 Proposed zoning: R-1 (NO CHANGE)
Zone Atlas page(s). N-9 No. of **existing** lots: 2 No. of **proposed** lots: 700
Total area of site (acres): 119.6365 Density if applicable: dwellings per gross acre: ~6 dwellings per net acre: ~7
Within city limits? X Yes. No___, but site is within 5 miles of the city limits.) Within 1000FT of a landfill? NO.
UPC No 100805433741210104/100805464943510102 MRGCD Map No. N/A.
LOCATION OF PROPERTY BY STREETS: On or Near: GIBSON BLVD SW
Between: DELGADO DR. SW and BLAKE RD. SW

CASE HISTORY:

List any current or prior case number that may be relevant to your application (Proj., App., DRB-, AX_,Z_, V_, S_, etc.):
S-1082-MP1 DRB95-440, AX-29
Check-off if project was previously reviewed by Sketch Plat/Plan ☐, or Pre-application Review Team ☐. Date of review:

SIGNATURE Fred C. Arfman DATE 05.10.04
(Print) FRED C. ARFMAN ___ Applicant X Agent

FOR OFFICIAL USE ONLY

Form revised 9/01, 3/03, 7/03, 10/03, 3/04

☐ INTERNAL ROUTING
☐ All checklists are complete
☐ All fees have been collected
☐ All case #s are assigned
☐ AGIS copy has been sent
☐ Case history #s are listed
☐ Site is within 1000ft of a landfill
☐ F.H.D.P. density bonus
☐ F.H.D.P. fee rebate

Application case numbers	Action	S.F.	Fees
04DRB-____-00717	Sketch	SK	$ -0-
____-____-____	____	____	$ ____
____-____-____	____	____	$ ____
____-____-____	____	____	$ ____
____-____-____	____	____	$ ____
			Total
			$ -0-

Hearing date 5-19-04

Barbara Baca 5-11-04
Planner signature / date

Project # 1003429

FORM S(3): SUBDIVISION - D.R.B. MEETING (UNADVERTISED) OR INTERNAL ROUTING

☒ **SKETCH PLAT REVIEW AND COMMENT** **YOUR ATTENDANCE IS REQUIRED.**

- ✓ Scale drawing of the proposed subdivision plat (folded to fit into an 8.5" by 14" pocket) **6** copies for unadvertised meetings. Sketches are not reviewed through internal routing.
- N/A Site sketch with measurements showing structures, parking, Bldg. setbacks, adjacent rights-of-way and street improvements, etcetera, if there is any existing land use (folded to fit into an 8.5" by 14" pocket) **6** copies.
- ✓ Zone Atlas map with the entire property(ies) precisely and clearly outlined and crosshatched (to be photocopied)
- ✓ Letter briefly describing, explaining, and justifying the request
- ✓ Any original and/or related file numbers are listed on the cover application

❑ **MAJOR SUBDIVISION EXTENSION OF PRELIMINARY PLAT** **Your attendance is required.**

- __ Preliminary Plat reduced to 8.5" x 11"
- __ Zone Atlas map with the entire property(ies) precisely and clearly outlined and crosshatched (to be photocopied)
- __ Letter briefly describing, explaining, and justifying the request
- __ Copy of previous D.R.B. approved infrastructure list
- __ Copy of the Official D.R.B. Notice of approval
- __ Any original and/or related file numbers are listed on the cover application

Extensions are not reviewed through internal routing.

Extension of preliminary plat approval expires after one year.

❑ **MAJOR SUBDIVISION FINAL PLAT APPROVAL** **Your attendance is required.**

- __ Proposed Final Plat (folded to fit into an 8.5" by 14" pocket) **6** copies for unadvertised meetings, **4** copies for internal routing.
- __ Design elevations & cross sections of perimeter walls
- __ Zone Atlas map with the entire property(ies) precisely and clearly outlined and crosshatched (to be photocopied)
- __ Original Mylar drawing of the proposed plat for internal routing only. Otherwise, bring Mylar to meeting.
- __ Property owner's and City Surveyor's signatures on the Mylar drawing
- __ SIA financial guaranty verification
- __ Landfill disclosure and EHD signature line on the Mylar drawing if property is within a landfill buffer
- __ Any original and/or related file numbers are listed on the cover application
- __ **DXF FILE AND HARD COPY OF FINAL PLAT DATA FOR AGIS IS REQUIRED.**

❑ **MINOR SUBDIVISION PRELIMINARY / FINAL PLAT APPROVAL** **Your attendance is required.**

- __ Proposed Preliminary / Final Plat (folded to fit into an 8.5" by 14" pocket) **6** copies for unadvertised meetings, **4** copies for internal routing.
- __ Site sketch with measurements showing structures, parking, Bldg. setbacks, adjacent rights-of-way and street improvements, etcetera, if there is any existing land use (folded to fit into an 8.5" by 14" pocket) **6** copies.
- __ Zone Atlas map with the entire property(ies) precisely and clearly outlined and crosshatched (to be photocopied)
- __ Letter briefly describing, explaining, and justifying the request
- __ Original Mylar drawing of the proposed plat for internal routing only. Otherwise, bring Mylar to meeting.
- __ Property owner's and City Surveyor's signatures on the Mylar drawing
- __ Landfill disclosure and EHD signature line on the Mylar drawing if property is within a landfill buffer
- __ Fee (see schedule)
- __ Any original and/or related file numbers are listed on the cover application
- __ Infrastructure list if required **(verify with DRB Engineer)** **NO INTERNAL ROUTING**
- __ **DXF FILE AND HARD COPY OF FINAL PLAT DATA FOR AGIS IS REQUIRED.**

❑ **AMENDMENT TO PRELIMINARY PLAT (with minor changes)** **Your attendance is required.**

❑ **AMENDMENT TO INFRASTRUCTURE LIST (with minor changes)**

❑ **AMENDMENT TO GRADING PLAN (with minor changes)**

PLEASE NOTE: There are no clear distinctions between significant and minor changes with regard to subdivision amendments. Significant changes are those deemed by the DRB to require public notice and public hearing.

- __ Proposed Amended Preliminary Plat, Infrastructure List, and/or Grading Plan (folded to fit into an 8.5" by 14" pocket) **6** copies for unadvertised meetings, **4** copies for internal routing.
- __ Original Preliminary Plat, Infrastructure List, and/or Grading Plan (folded to fit into an 8.5" by 14" pocket) **6** copies for unadvertised meetings, **4** copies for internal routing.
- __ Zone Atlas map with the entire property(ies) precisely and clearly outlined and crosshatched (to be photocopied)
- __ Letter briefly describing, explaining, and justifying the request
- __ Original Mylar drawing of the proposed amended plat for internal routing only. Otherwise, bring Mylar to meeting.
- __ Property owner's and City Surveyor's signatures on the Mylar drawing, if the plat is being amended
- __ Any original and/or related file numbers are listed on the cover application

Amended preliminary plat approval expires after one year.

I, the applicant, acknowledge that any information required but not submitted with this application will likely result in deferral of actions.

FRED C. ARFMAN
Applicant name (print)

Fred C. Arfman
Applicant signature / date

Form revised 3/03 and 8/03

- ☐ Checklists complete
- ☐ Fees collected
- ☐ Case #s assigned
- ☐ Related #s listed

Application case numbers
04DRB-____-00717
____-____-____
____-____-____

Bachelder 5-11-04
Planner signature / date

Project # 1003429

PROJECT MEMORANDUM

05/11/04

TO: Sheran Matson, DRB Chair

FROM: Fred C. Arfman, Isaacson & Arfman, P.A.

REF: El Rancho Grande, Unit 16 ***I&A PROJ NO:*** 1349

SUBJ: Letter of Justification

Isaacson & Arfman, P.A. consulting engineers and agent for Curb, Inc. request submittal into the City Development Review Board process for review and comments of the Sketch Plat.

A traffic distribution plan shall be submitted to Wilfred Gallegos, Transportation Development, for his use.

WESTGATE DRAINAGE DAM
SP—93—200

AMOLE ARROYO DESIGN OVERLAY ZONE

WALL OVERLAY ZONE R-1 AND R-4

(NORTH)
EL RANCH
GRANDE
UNIT 16
(SOUTH)

GIBSON

RIO BRAVO

ROSNER
TRACT
SP—88—83

RIO BRAVO SECTOR DEVELOPMENT PLAN BOUNDARY

SEE
RIO BRAVO
SECTOR PLAN
FOR ZONING

8

RIO BRAVO PARTNERS

9-05-27

2A

2B

2C

2D

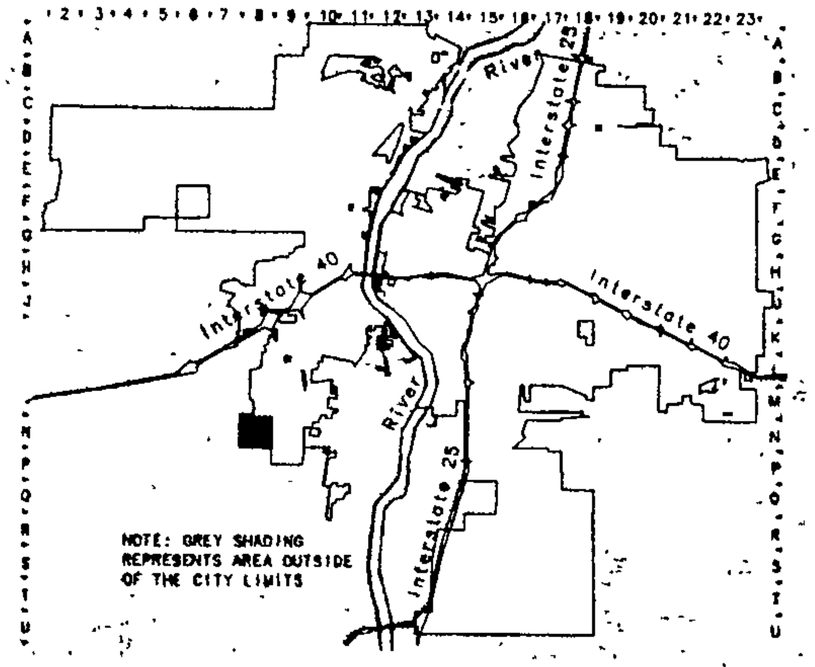

CITY OF
Albuquerque

Albuquerque Geographic Information System
PLANNING DEPARTMENT

© Copyright 2002

GRAPHIC SCALE IN FEET
250 0 750 1000

Zone Atlas Page

N-8-Z

Map Amended through April 02, 2002