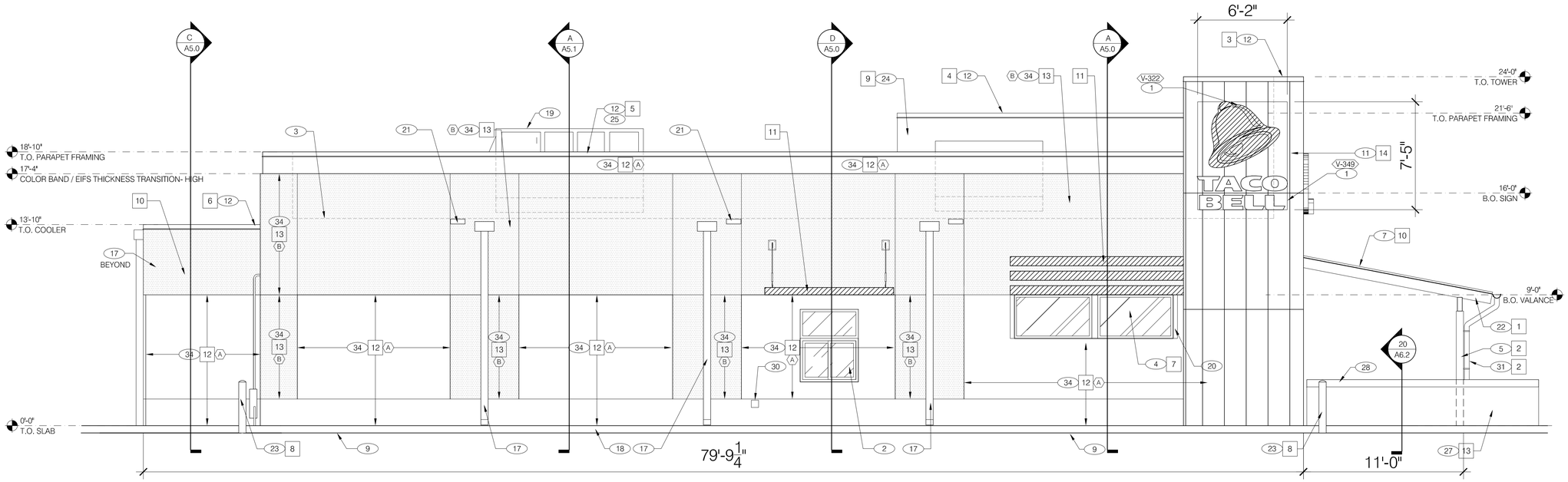

LEFT SIDE ELEVATION 1/4" = 1'-0" | **A**

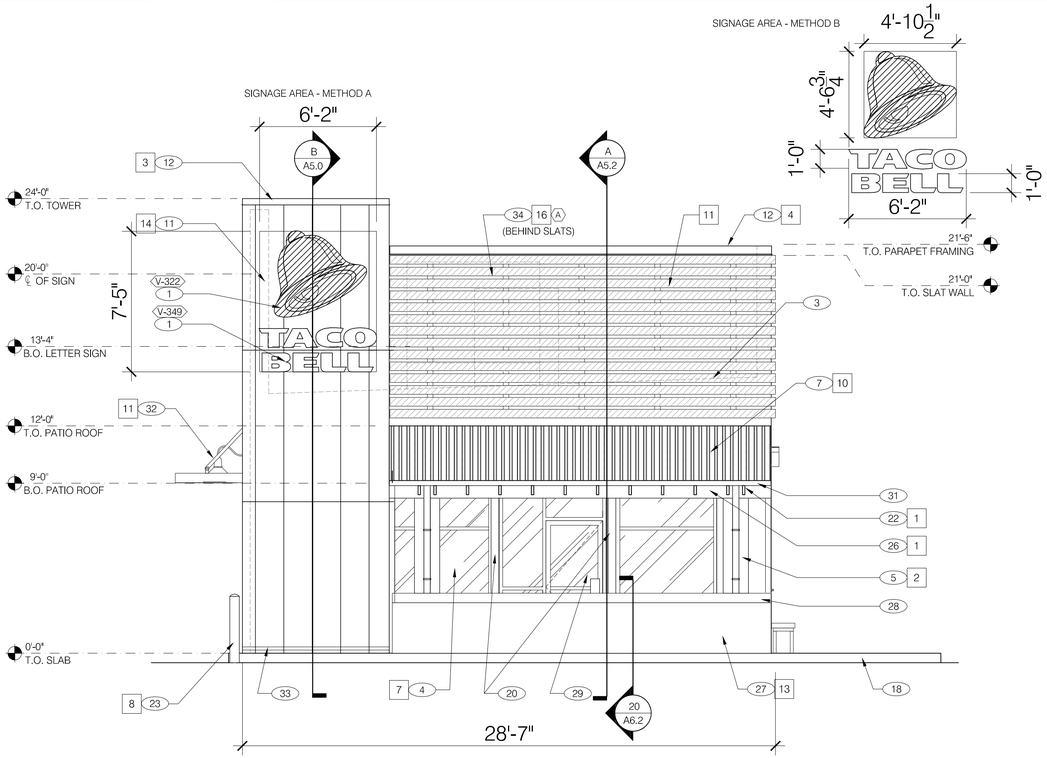

FRONT ELEVATION 1/4" = 1'-0" | **C**

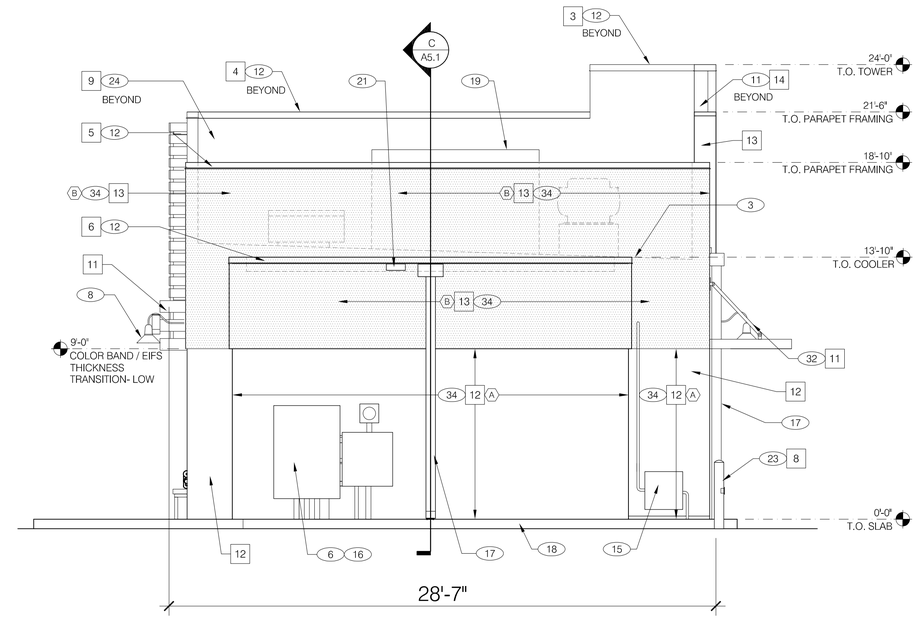

REAR ELEVATION 1/4" = 1'-0" | **B**

MARK D. MCCLUGGAGE AIA, CCS
1525 E. Douglas Wichita, KS 67211
Tel: (316) 265-5357
Fax: (316) 265-5646
www.gbtnv.com

12134.230

CONTRACT DATE:	--
BUILDING TYPE:	EXP. LITE MED40
PLAN VERSION:	SEPTEMBER 2015
SITE NUMBER:	--
STORE NUMBER:	--

TACO BELL

UNSER BLVD NW & McMAHON BLVD. NW
ALBUQUERQUE, NM 87114

EXPLORER LITE
MEDIUM 40

EXTERIOR ELEVATIONS

A4.1