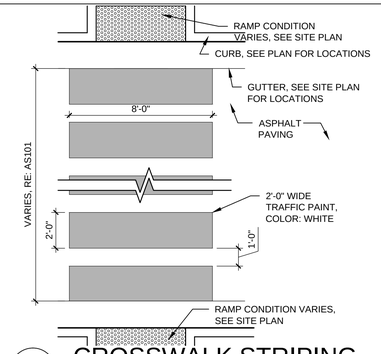

D1 CROSSWALK STRIPING
1/4" = 1'-0"

NOTE:
1. ARROWS TO BE REFLECTIVE PAINT COLOR: WHITE

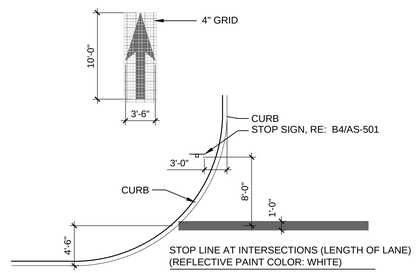

D2 PAVEMENT STRIPING & ARROW
1/8" = 1'-0"

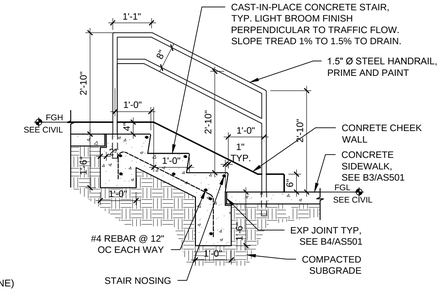

D3 CONCRETE STAIRS
1/2" = 1'-0"

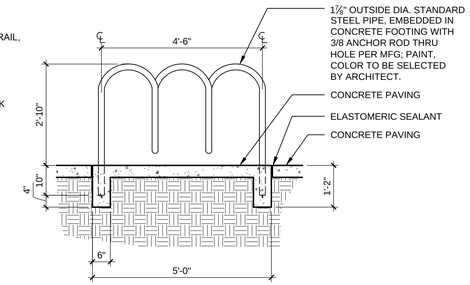

D4 BIKE RACK ELEVATIONS
1/2" = 1'-0"

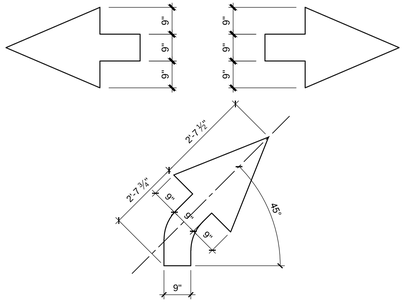

D5 DIRECTIONAL PAVEMENT ARROW
1/2" = 1'-0"

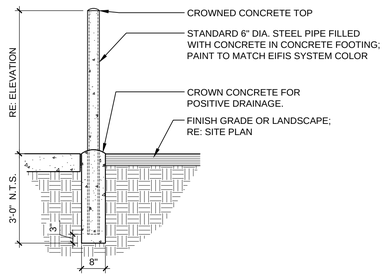

C1 TRASH ENCLOSURE GATE BOLLARD - 6" DIA
1/2" = 1'-0"

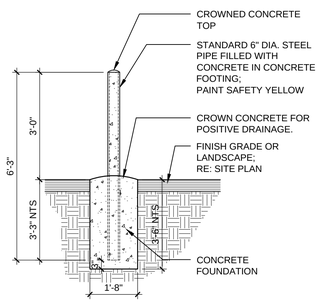

C2 BOLLARD - 6" DIA
1/2" = 1'-0"

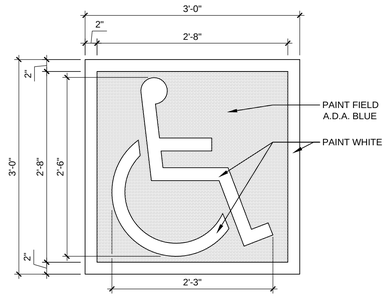

C3 A.D.A. PARKING SPACE PAVEMENT SIGNAGE
1" = 1'-0"

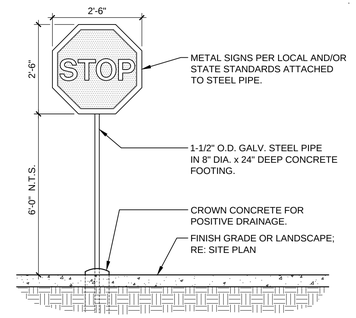

C4 POLE MOUNTED STOP SIGN
1/2" = 1'-0"

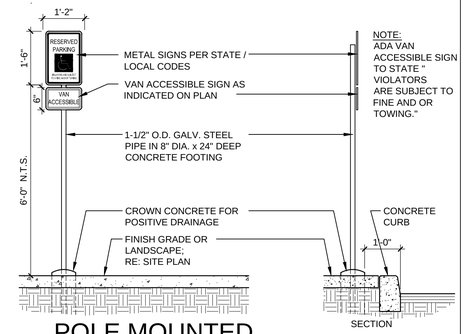

NOTE:
ADA VAN ACCESSIBLE SIGN TO STATE " VIOLATORS ARE SUBJECT TO FINE AND OR TOWING."

B2 POLE MOUNTED A.D.A PARKING SPACE SIGN
1/2" = 1'-0"

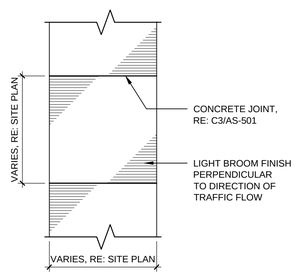

B1 CONCRETE WALK PLAN
1/4" = 1'-0"

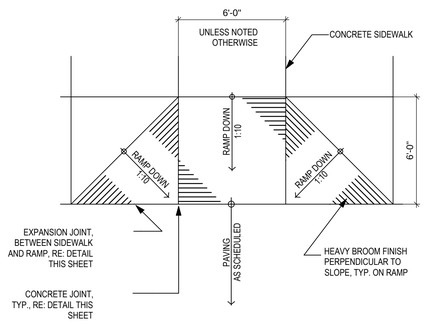

B2 ACCESSIBLE RAMP, TYPE B
1/4" = 1'-0"

NOTE: PROVIDE CONTROL JOINTS @ 6'-0" O.C. MAX. AND DOWELED EXPANSION JOINTS @ 24'-0" O.C. MAX. UNLESS SHOWN OTHERWISE. RE: CONCRETE JOINT AND EXPANSION JOINT DETAILS AND SITE PLAN.

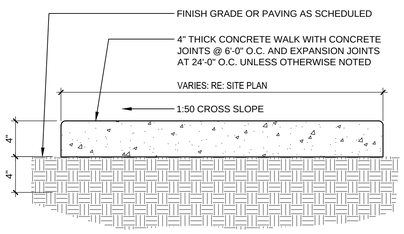

B3 CONCRETE SIDEWALK
1 1/2" = 1'-0"

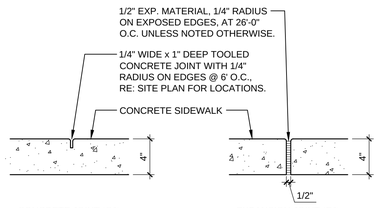

B4 CONCRETE JOINT and EXPANSION JOINT
1 1/2" = 1'-0"

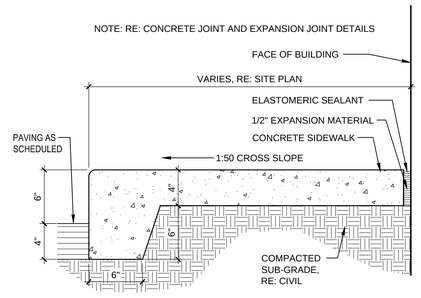

B5 BUILDING APRON
1 1/2" = 1'-0"

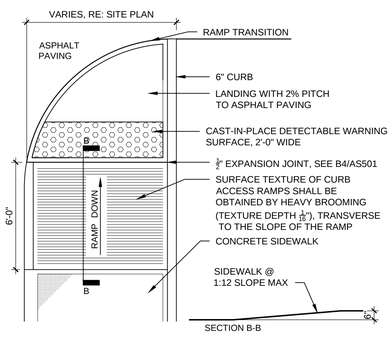

A1 ACCESSIBLE RAMP, TYPE A
1/4" = 1'-0"

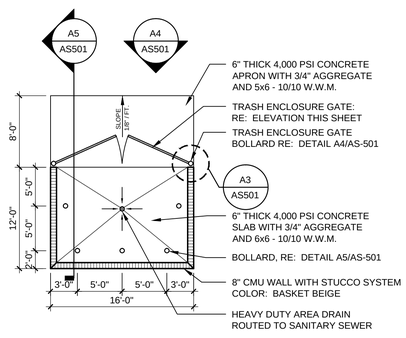

A2 TRASH ENCLOSURE PLAN
1/8" = 1'-0"

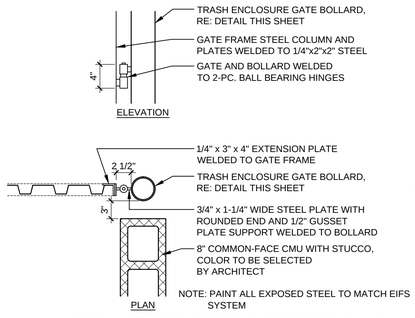

A3 BOLLARD CONNECTION at TRASH ENCLOSURE GATE
1" = 1'-0"

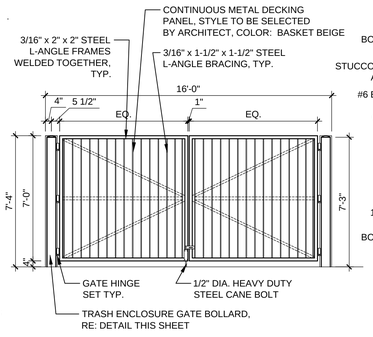

A4 TRASH ENCLOSURE GATE
1/4" = 1'-0"

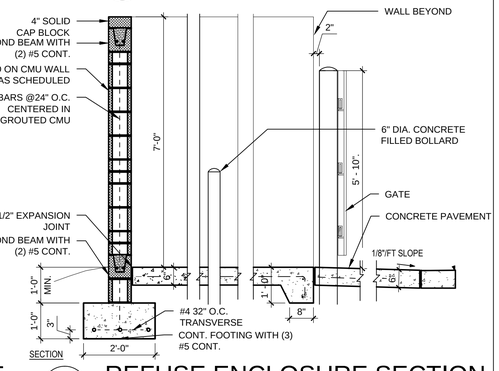

A5 REFUSE ENCLOSURE SECTION
1/2" = 1'-0"

ARCHITECTURE / DESIGN / INSPIRATION

DEKKER PERICH SABATINI

7601 JEFFERSON NE, SUITE 100
ALBUQUERQUE, NM 87109

505.761.9700 / DPSDESIGN.ORG

SEAL

PROJECT

UPTOWN SHOPS
ALBUQUERQUE, NM

URT REVIEW

REVISIONS

DRAWN BY	LI, AC
REVIEWED BY	CG
DATE	11/19/2015
PROJECT NO	15-0102

DRAWING NAME

SITE DETAILS

SHEET NO

02 OF 11