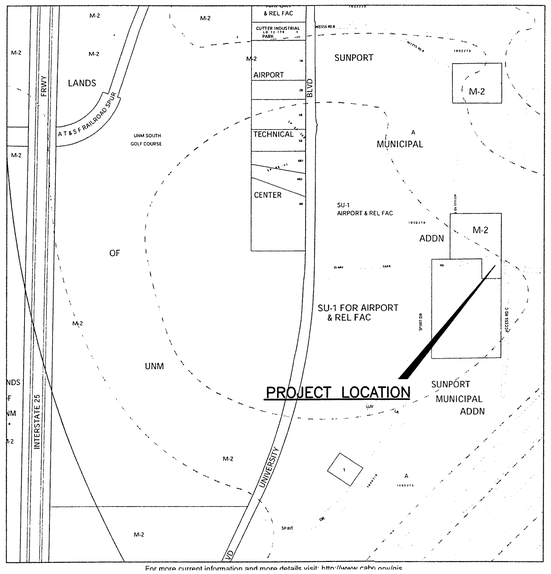

For more current information and more details visit: http://www.cabq.gov/zap

ZONE ATLAS MAP – N–15

CLARK CARR BLVD.

DROP INLET

CAUTION:
NOTE THAT ALL EXISTING UTILITIES MAY NOT BE SHOWN. EXISTING SERVICE CONNECTIONS ARE NOT SHOWN. ANY EXISTING UTILITIES THAT ARE SHOWN ARE SHOWN IN APPROXIMATE LOCATION ONLY. IT SHALL BE THE RESPONSIBILITY OF THE CONTRACTOR TO CONTACT ALL THE UTILITY OWNERS AND TO CONDUCT ALL NECESSARY FIELD INVESTIGATIONS PRIOR TO ANY EXCAVATION TO DETERMINE THE ACTUAL LOCATION OF UTILITIES AND OTHER IMPROVEMENTS.

KEYED NOTES

1. 28'x60' MODULAR OFFICE BUILDING, SEE ARCHITECTURAL DRAWINGS.
2. 4" THICK PEDESTRIAN ACCESS CONCRETE SIDEWALK W/ TURNED DOWN FACE
3. ACCESSIBLE PARKING SPACE AND RAMP TO BE CONSTRUCTED WITH 4" THICK CONCRETE ON 95% COMPACTED SUBGRADE ASTM D1557, SEE SHEET C–501 FOR DETAILS
4. LEASE AREA LIMITS (100.0'x115.0') SEE DESCRIPTION BELOW
5. PRECAST CONCRETE WHEELSTOP TYP. (8 TOTAL) SEE DETAIL SHEET C–501
6. 8' PEDESTRIAN SIDEWALK RAMP FROM PARKING AREA TO SIDEWALK GRADE. PER ADA REQUIREMENTS.
7. COMPACTED MILLINGS PARKING AREA
8. 2" THICK ASPHALT PAVEMENT ON 6" PREPARED SUBGRADE (95% COMPACTION). CONNECTION TO EXISTING ROADWAY WILL CONSIST OF A STRAIGHT SAWCUT 1' FROM EXISTING EDGE. WATCH EXISTING GRADES.

SUNPORT MUNICIPAL ADDITION NO. 9

OWNER: CITY OF ALBUQUERQUE, ZONED M–2

LEASE AREA "A–9" CONTAINING 0.2647 ACRES

COMMUNICATION BOX

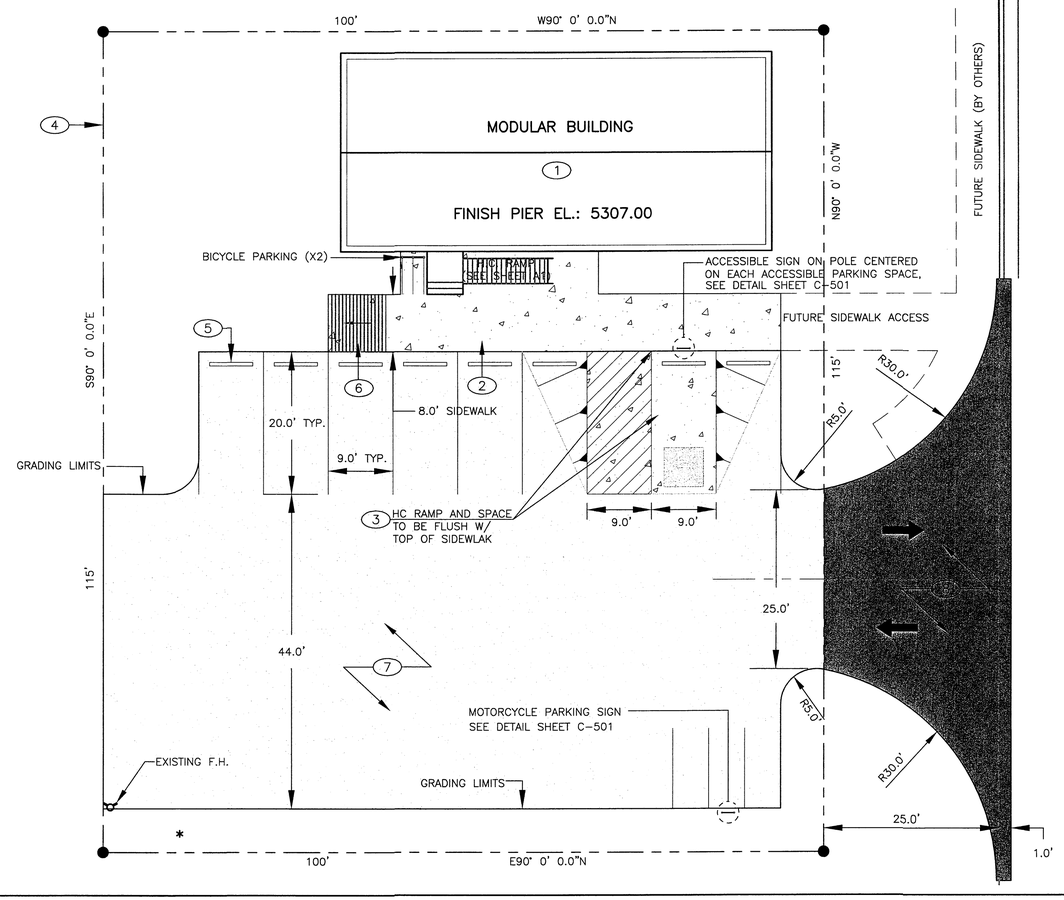

ACCESS ROAD "C"

LEASE AREA DESCRIPTION

A TRACT OF LAND KNOWN AS LEASE AREA "A", LOCATED IN THE NORTHEAST CORNER OF MUNICIPAL ADDITION #9 OWNED BY THE CITY OF ALBUQUERQUE

BEGINING AT THE NORTHEAST CORNER OF SAID LEASE AREA WHICH LAYS APPROXIMATELY 55.0' SOUTH, AND 24.0' WEST OF MUNICIPAL ADDITION #9. THENCE: TRUE WEST A DISTANCE OF APPROXIMATELY 100.0' TO THE NORTHWEST CORNER OF SAID LEASE. THENCE: DEPARTING FROM SAID POINT TRUE SOUTH A DISTANCE OF APPROXIMATELY 115.0' TO THE SOUTHWEST CORNER OF SAID LEASE. THENCE: DEPARTING FROM SAID POINT TRUE EAST A DISTANCE OF APPROXIMATELY 100.0' TO THE SOUTHEAST CORNER OF SAID LEASE. THENCE: DEPARTING FROM SAID POINT TRUE NORTH A DISTANCE OF APPROXIMATELY 115.0' TO THE NORTHEAST CORNER POINT OF LEASE BEGINING.

THE ABOVE DESCRIBED LEASE AREA CONTAINS 0.2647 ACRES MORE OR LESS

LEGEND

- TRAFFIC FLOW DIRECTION
- LEASE BOUNDARY
- CONCRETE SIDEWALK
- OPEN–GRADED GRAVEL
- 2" ASPHALT ON 6" PREPARED SUBGRADE (95% COMPACTION)

N

0 2' 5' 10' 20'

ANGELA
#6 1/22/09
1007630

PROJECT NUMBER: _____

Application Number: _____

Is an Infrastructure List required? ( ) Yes ( ) No If yes, then a set of approved DRC plans with a work order is required for any construction within Public Right-of-Way or for construction of public improvements.

DRB SITE DEVELOPMENT PLAN APPROVAL:

Traffic Engineering, Transportation Division	Date
ABCWUA	Date
Parks and Recreation Department	Date
City Engineer	Date
* Environmental Health Department (conditional)	Date
Solid Waste Management	Date
DRB Chairperson, Planning Department	Date

*Environmental Health, if necessary

AS BUILT INFORMATION
CONTRACTOR
WORK STAKED BY — DATE
INSPECTORS ACCEPTANCE BY — DATE
FIELD VERIFICATION BY — DATE
DRAWINGS CORRECTED BY — DATE
MICRO–FILM INFORMATION
RECORDED BY — DATE
NO.

BENCH MARKS

SURVEY INFORMATION
FIELD NOTES
NO. | BY | DATE

ENGINEER'S SEAL
JOHN M. PROVINE
10997
NEW MEXICO
REGISTERED PROFESSIONAL ENGINEER

NO.	DATE	REMARKS	BY
		REVISIONS	

DESIGN
DESIGNED BY CWG DATE 12/08
DRAWN BY CWG DATE 12/08
CHECKED BY JMP DATE 12/08

TITLE: NMDOT - AVIATION DIVISION OFFICES

SITE PLAN

Design Review Committee	City Engineer Approval	Last Design Update	Mo./Day/Yr.	Mo./Day/Yr.

City Project No.	Zone Map No.	Sheet	Of
..	N-15	C-101	

© COPYRIGHT ...

LAST MODIFIED: Jan 23, 2009 – 10:50am BY USER: jgarcia
DWG. NAME: C:\Documents and Settings\jgarcia\Desktop\SUNPORT\State Aviation Office SDP\

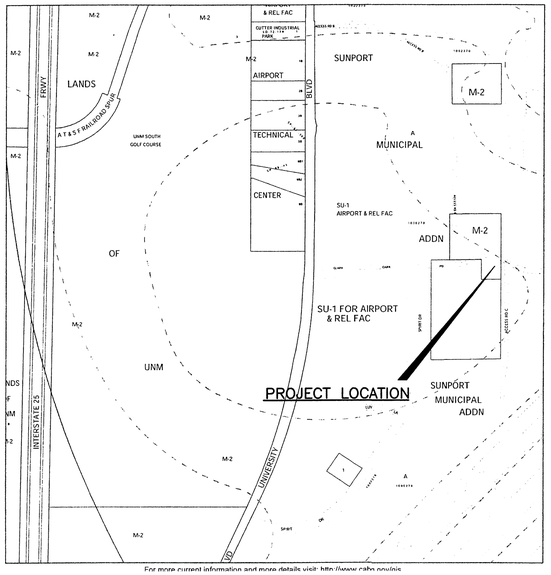

ZONE ATLAS MAP – N-15

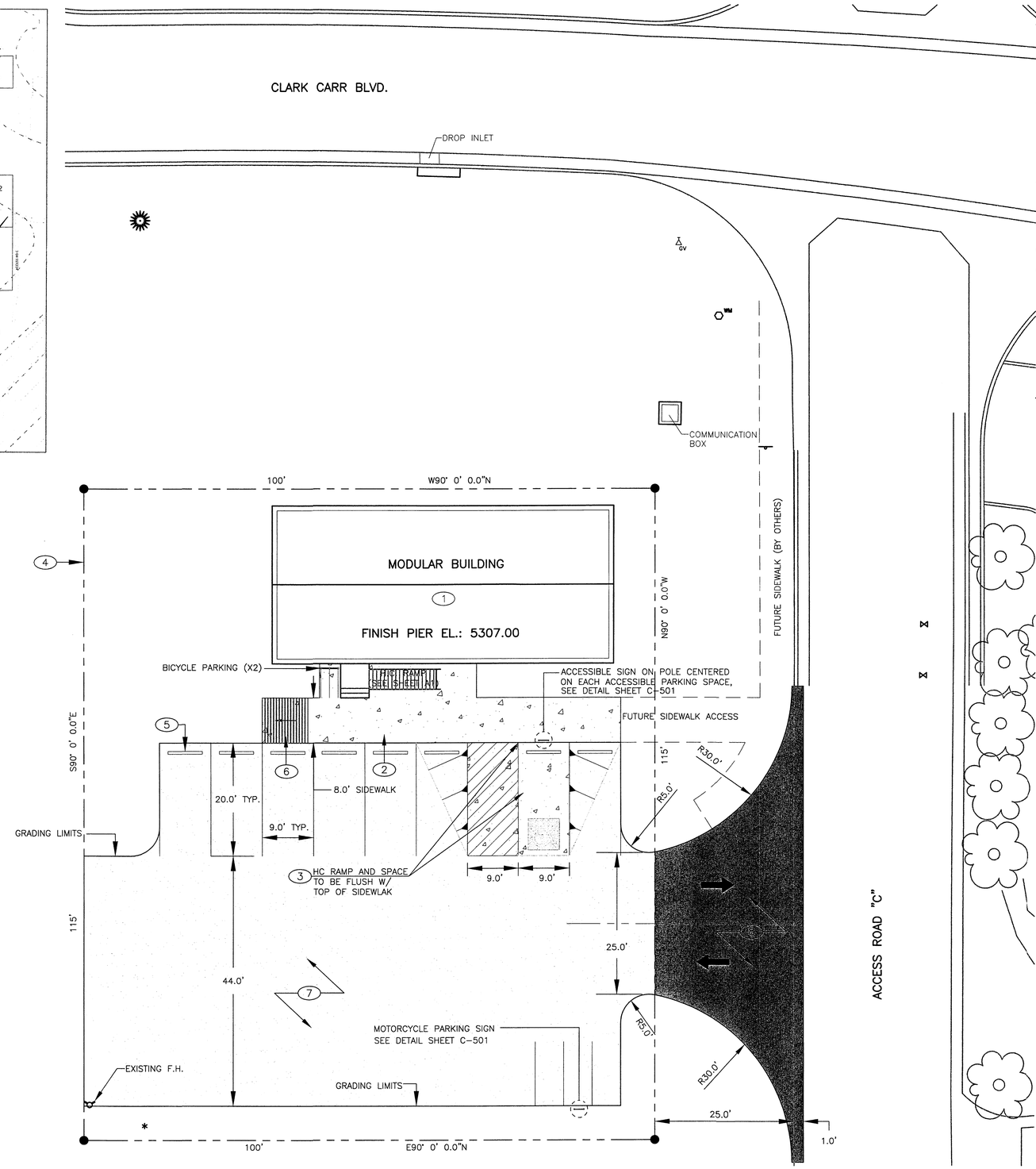

KEYED NOTES

1. 28'x60' MODULAR OFFICE BUILDING, SEE ARCHITECTURAL DRAWINGS.
2. 4" THICK PEDESTRIAN ACCESS CONCRETE SIDEWALK W/ TURNED DOWN FACE
3. ACCESSIBLE PARKING SPACE AND RAMP TO BE CONSTRUCTED WITH 4" THICK CONCRETE ON 95% COMPACTED SUBGRADE ASTM D1557, SEE SHEET C-501 FOR DETAILS
4. LEASE AREA LIMITS (100.0'x115.0') SEE DESCRIPTION BELOW
5. PRECAST CONCRETE WHEELSTOP TYP. (8 TOTAL) SEE DETAIL SHEET C-501
6. 8' PEDESTRIAN SIDEWALK RAMP FROM PARKING AREA TO SIDEWALK GRADE. PER ADA REQUIREMENTS.
7. COMPACTED MILLINGS PARKING AREA
8. 2" THICK ASPHALT PAVEMENT ON 6" PREPARED SUBGRADE (95% COMPACTION). CONNECTION TO EXISTING ROADWAY WILL CONSIST OF A STRAIGHT SAWCUT 1' FROM EXISTING EDGE. WATCH EXISTING GRADES.

LEASE AREA DESCRIPTION

A TRACT OF LAND KNOWN AS LEASE AREA "A", LOCATED IN THE NORTHEAST CORNER OF MUNICIPAL ADDITION #9 OWNED BY THE CITY OF ALBUQUERQUE

BEGINING AT THE NORTHEAST CORNER OF SAID LEASE AREA WHICH LAYS APPROXIMATELY 55.0' SOUTH, AND 24.0' WEST OF MUNICIPAL ADDITION #9. THENCE: TRUE WEST A DISTANCE OF APPROXIMATELY 100.0' TO THE NORTHWEST CORNER OF SAID LEASE. THENCE: DEPARTING FROM SAID POINT TRUE SOUTH A DISTANCE OF APPROXIMATELY 115.0' TO THE SOUTHWEST CORNER OF SAID LEASE. THENCE: DEPARTING FROM SAID POINT TRUE EAST A DISTANCE OF APPROXIMATELY 100.0' TO THE SOUTHEAST CORNER OF SAID LEASE. THENCE: DEPARTING FROM SAID POINT TRUE NORTH A DISTANCE OF APPROXIMATELY 115.0' TO THE NORTHEAST CORNER POINT OF LEASE BEGINING.

THE ABOVE DESCRIBED LEASE AREA CONTAINS 0.2647 ACRES MORE OR LESS

LEGEND

- TRAFFIC FLOW DIRECTION
- LEASE BOUNDARY
- CONCRETE SIDEWALK
- OPEN-GRADED GRAVEL
- 2" ASPHALT ON 6" PREPARED SUBGRADE (95% COMPACTION)

N

0 2' 5' 10' 20'

CAUTION:
NOTE THAT ALL EXISTING UTILITIES MAY NOT BE SHOWN. EXISTING SERVICE CONNECTIONS ARE NOT SHOWN. ANY EXISTING UTILITIES THAT ARE SHOWN ARE SHOWN IN APPROXIMATE LOCATION ONLY. IT SHALL BE THE RESPONSIBILITY OF THE CONTRACTOR TO CONTACT ALL THE UTILITY OWNERS AND TO CONDUCT ALL NECESSARY FIELD INVESTIGATIONS PRIOR TO ANY EXCAVATION TO DETERMINE THE ACTUAL LOCATION OF UTILITIES AND OTHER IMPROVEMENTS.

AS BUILT INFORMATION
CONTRACTOR WORK STAKED BY — DATE
INSPECTIONS ACCEPTANCE BY — DATE
FIELD VERIFICATION BY — DATE
DRAWINGS CORRECTED BY — DATE
MICRO-FILM INFORMATION
RECORDED BY — DATE
NO.

BENCH MARKS

SURVEY INFORMATION
FIELD NOTES
NO. | BY | DATE

ENGINEER'S SEAL
JOHN M. PROVINE
10997
NEW MEXICO
REGISTERED PROFESSIONAL ENGINEER
12/15/08

NO.	DATE	REMARKS	BY
		REVISIONS	

DESIGN

DESIGNED BY	CWG	DATE 12/08
DRAWN BY	CWG	DATE 12/08
CHECKED BY	JMP	DATE 12/08

TITLE: NMDOT - AVIATION DIVISION OFFICES

TRAFFIC CIRCULATION

Design Review Committee	City Engineer Approval	Last Design Update	Mo./Day/Yr.	Mo./Day/Yr.

City Project No.	Zone Map No.	Sheet	Of
..	N-15	C-102	

© COPYRIGHT ...

LAST MODIFIED: Fri 12, 2008 - 10:06am JOB USER: sprinkle
DRAWING: C:\Documents and Settings\sprinkle\Desktop\Temp\ Exhibit Plans - Rev. DWGS\State Aviation Office Site\
DWG NAME: OAB-102SK.dwg

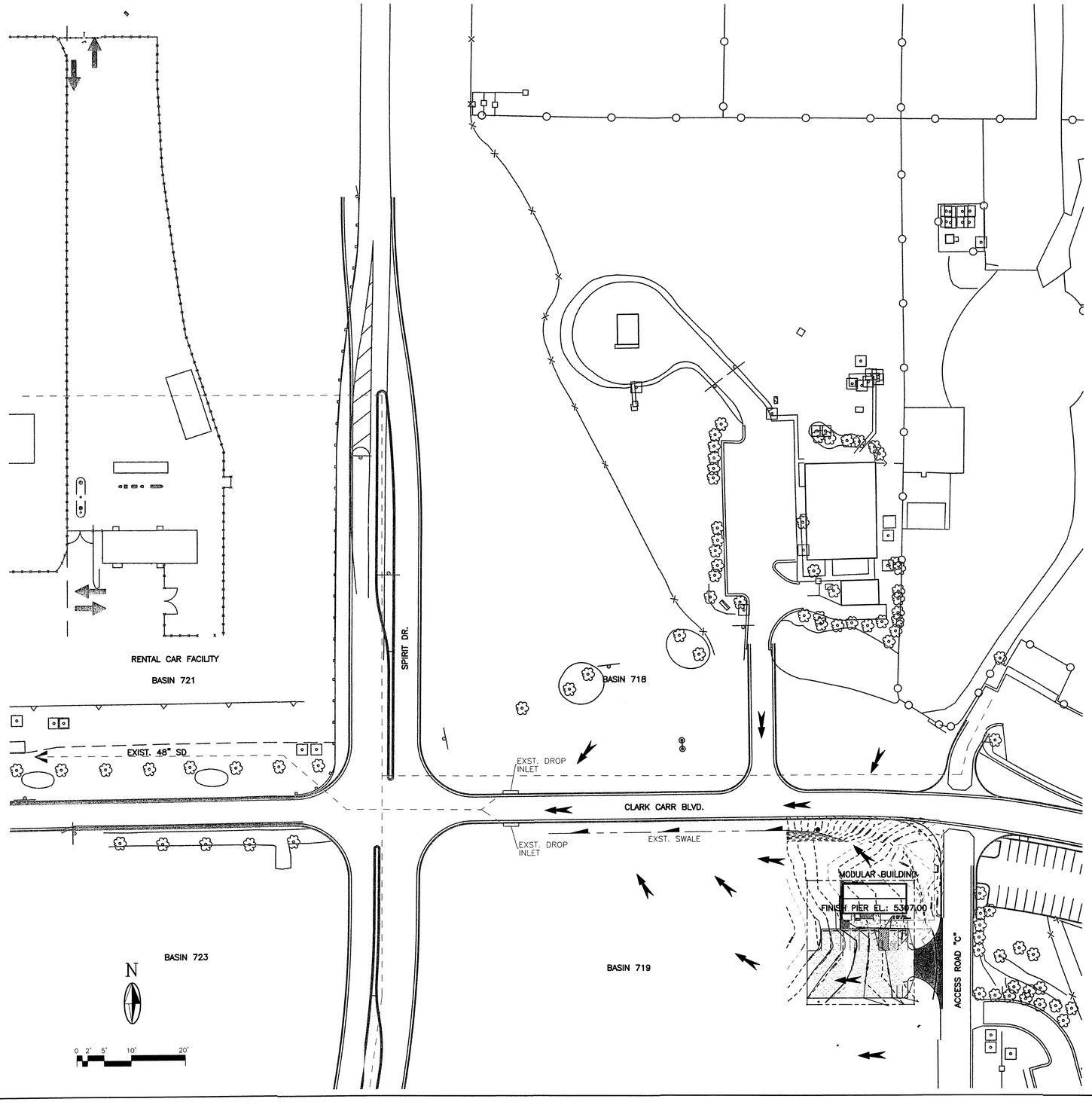

LEASE AREA DESCRIPTION

A TRACT OF LAND KNOWN AS LEASE AREA "A", LOCATED IN THE NORTHEAST CORNER OF MUNICIPAL ADDITION #9 OWNED BY THE CITY OF ALBUQUERQUE

BEGINING AT THE NORTHEAST CORNER OF SAID LEASE AREA WHICH LAYS APPROXIMATELY 55.0' SOUTH, AND 24.0' WEST OF MUNICIPAL ADDITION #9. THENCE: TRUE WEST A DISTANCE OF APPROXIMATELY 100.0' TO THE NORTHWEST CORNER OF SAID LEASE. THENCE: DEPARTING FROM SAID POINT TRUE SOUTH A DISTANCE OF APPROXIMATELY 115.0' TO THE SOUTHWEST CORNER OF SAID LEASE. THENCE: DEPARTING FROM SAID POINT TRUE EAST A DISTANCE OF APPROXIMATELY 100.0' TO THE SOUTHEAST CORNER OF SAID LEASE. THENCE: DEPARTING FROM SAID POINT TRUE NORTH A DISTANCE OF APPROXIMATELY 115.0' TO THE NORTHEAST CORNER POINT OF LEASE BEGINING.

THE ABOVE DESCRIBED LEASE AREA CONTAINS 0.2647 ACRES MORE OR LESS

LEGEND

- LEASE BOUNDARY
- 5814.50 — NEW TOPOGRAPHIC CONTOUR
- 5814.50 — EXISTING TOPOGRAPHIC CONTOUR
- DRAINAGE SWALE
- CONCRETE SIDEWALK
- OPEN-GRADED GRAVEL
- OVERLAND FLOW DIRECTION

DRAINAGE CALCULATIONS

EXISTING SITE CHARACTERISTICS

(CITY OF ALBUQUERQUE DEVELOPMENT PROCESS MANUAL – CHAPTER 22)

*100 YEAR RAINFALL TABLE (ZONE 2)
100yr – 1hr = 2.01in
100yr – 6hr = 2.35in
100yr – 24hr = 2.75in

*BASIN A
AREA = 0.57ac
LAND TREATMENT:
A = 0.0%
B = 0.0%
C = 100.0%
D = 0.0%
REACH = 143.44ft
HIGH EL. = 5307.50ft
LOW EL. = 5303.00ft

FUTURE SITE CHARACTERISTICS

(CITY OF ALBUQUERQUE DEVELOPMENT PROCESS MANUAL – CHAPTER 22)

*100 YEAR RAINFALL TABLE (ZONE 2)
100yr – 1hr = 2.01in
100yr – 6hr = 2.35in
100yr – 24hr = 2.75in

*BASIN A
AREA = 0.57ac
LAND TREATMENT:
A = 0.0%
B = 0.0%
C = 90.0%
D = 10.0%
REACH = 143.44ft
HIGH EL. = 5307.50ft
LOW EL. = 5303.00ft

CALCULATIONS–EXISTING CONDITIONS

*BASIN A
Q(100yr–6hr) = 1.83cfs
RUNOFF Vol.(100yr–6hr) = 0.0541ac–ft
TP(100yr–6hr) = 0.13hr

CALCULATIONS–PROPOSED CONDITIONS

*BASIN A
Q(100yr–6hr) = 1.92cfs
RUNOFF Vol.(100yr–6hr) = 0.0588ac–ft
TP= 0.13hr

PROPOSED CONDITIONS

CONDITIONS ARE CONSISTENT WITH THE DEVELOPED CONDITIONS AS DEFINED IN THE RENTAL CAR FACILITY DRAINAGE REPORT, MOLZEN–CORBIN 1999, BASIN 719.

DRAINAGE NARRATIVE

EXISTING DRAINAGE CONDITIONS CONSIST OF OVERLAND FLOW, SWALES AND STORM DRAIN CULVERTS. THE AREA IN WHICH THE MODULAR BUILDING IS LOCATED HAS ALL SURFACE FLOW HEADED TO THE NORTHWEST, TOWARD CLARK CARR BLVD., WHERE IT ENCOUNTERS A SWALE THAT CHANNELS THE RUNOFF WATER WEST TOWARD THE INTERSECTION WITH SPIRIT DR.. EAST OF THIS INTERSECTION IS A DROP INLET WHICH COLLECTS THE SITE DISCHARGE INTO THE STORM DRAIN SYSTEM. ANY WATER WHICH THE SITE DISCHARGES THAT OVERFLOWS AND/OR PASSES THIS SWALE AND INLET WILL EVENTUALLY ENCOUNTER OTHER STORM DRAIN INLETS OR CHANNELS DEFINED IN THE SUNPORT DRAINAGE MASTERPLAN ALONG WITH THE RENTAL CAR FACILITY DRAINAGE MASTERPLAN.

CAUTION:
NOTE THAT ALL EXISTING UTILITIES MAY NOT BE SHOWN. EXISTING SERVICE CONNECTIONS ARE NOT SHOWN. ANY EXISTING UTILITIES THAT ARE SHOWN ARE SHOWN IN APPROXIMATE LOCATION ONLY. IT SHALL BE THE RESPONSIBILITY OF THE CONTRACTOR TO CONTACT ALL THE UTILITY OWNERS AND TO CONDUCT ALL NECESSARY FIELD INVESTIGATIONS PRIOR TO ANY EXCAVATION TO DETERMINE THE ACTUAL LOCATION OF UTILITIES AND OTHER IMPROVEMENTS.

AS BUILT INFORMATION
CONTRACTOR
WORK STAKED BY — DATE
INSPECTOR'S ACCEPTANCE BY — DATE
FIELD VERIFICATION BY — DATE
DRAWINGS CORRECTED BY — DATE
MICRO-FILM INFORMATION
RECORDED BY — DATE
NO.

BENCH MARKS

SURVEY INFORMATION
FIELD NOTES

NO.	BY	DATE

ENGINEER'S SEAL
JOHN M. PROVINE
10997
NEW MEXICO
REGISTERED PROFESSIONAL ENGINEER

NO.	DATE	REMARKS	BY

REVISIONS

DESIGN		
DESIGNED BY	CWG	DATE 12/08
DRAWN BY	CWG	DATE 12/08
CHECKED BY	JMP	DATE 12/08

TITLE: NMDOT - AVIATION DIVISION OFFICES

GRADING AND DRAINAGE PLAN

Design Review Committee	City Engineer Approval	Last Design Update	Mo./Day/Yr.	Mo./Day/Yr.

City Project No.	Zone Map No.	Sheet	Of
..	N-15	C-103	

© COPYRIGHT

LAST MODIFIED: Jan 23, 2009 – 1:55pm By: USER: jmprovine
DWG. LOCATION: L:\ALBUQUERQUE\Aviation Open Ext\Old Model – MISC DWGS\State Aviation Office SW\
DWG. NAME: C-103.dwg

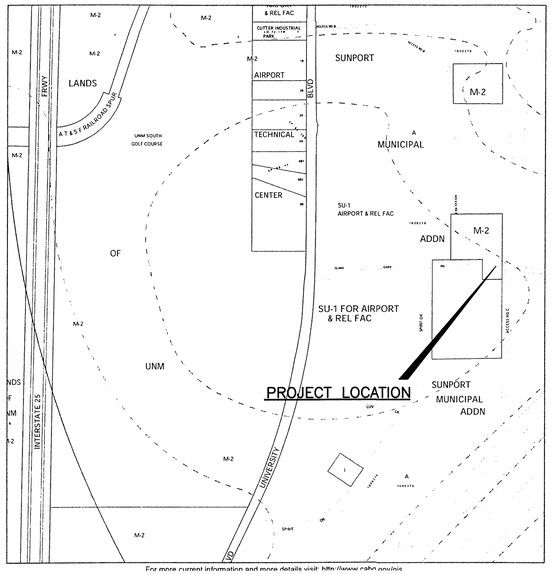

ZONE ATLAS MAP – N-15

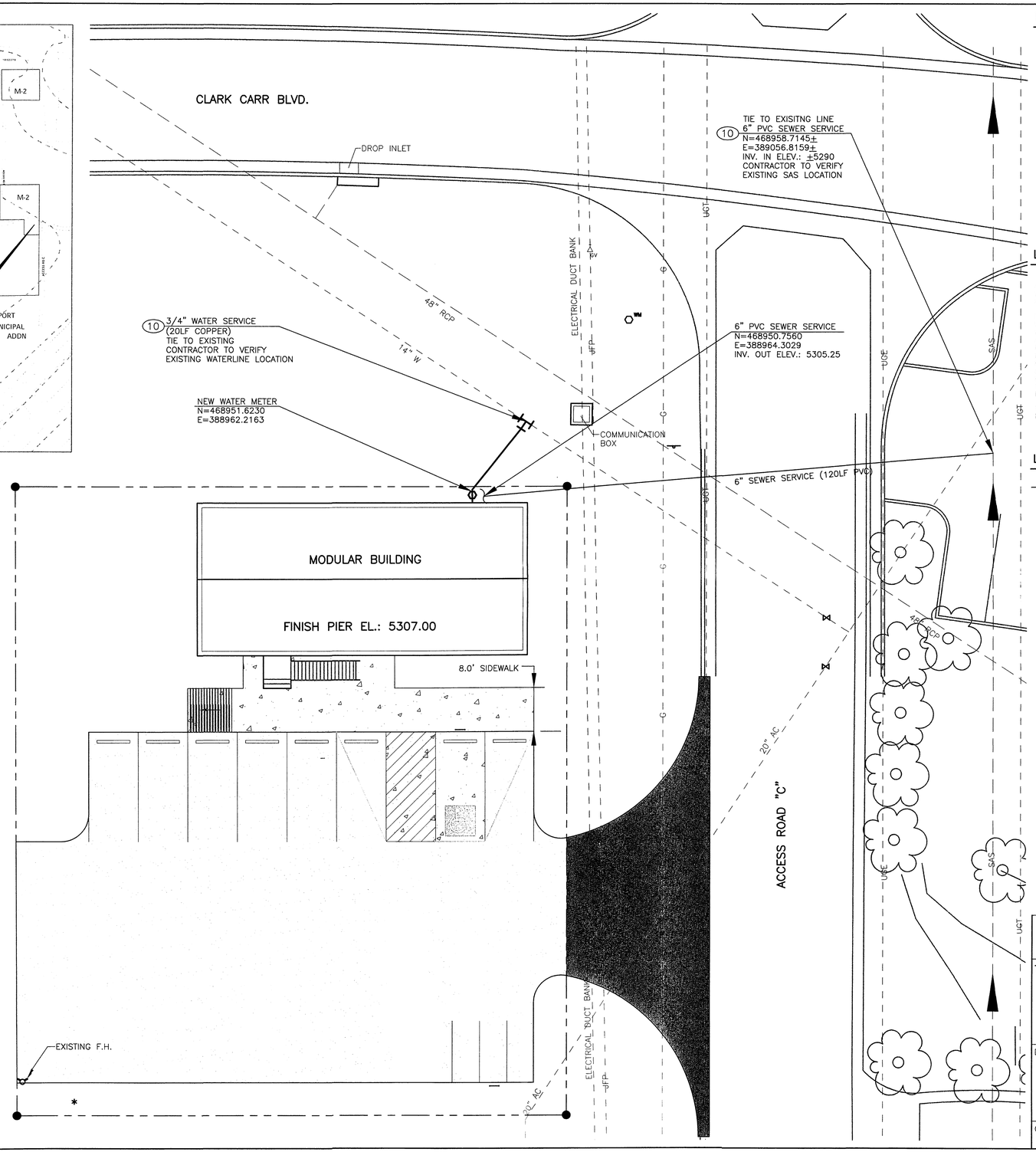

KEYED NOTES

(10) WATER AND SANITARY SEWER BY SEPERATE TAPPING PERMIT BY ALBUQUERQUE BERNALILLO COUNTY WATER UTILITY AUTHORITY (ABCWUA).

LEASE AREA DESCRIPTION

A TRACT OF LAND KNOWN AS LEASE AREA "A", LOCATED IN THE NORTHEAST CORNER OF MUNICIPAL ADDITION #9 OWNED BY THE CITY OF ALBUQUERQUE

BEGINING AT THE NORTHEAST CORNER OF SAID LEASE AREA WHICH LAYS APPROXIMATELY 25.0' SOUTH, AND 24.0' WEST OF MUNICIPAL ADDITION #9. THENCE: TRUE WEST A DISTANCE OF APPROXIMATELY 100.0' TO THE NORTHWEST CORNER OF SAID LEASE. THENCE: DEPARTING FROM SAID POINT TRUE SOUTH A DISTANCE OF APPROXIMATELY 115.0' TO THE SOUTHWEST CORNER OF SAID LEASE. THENCE: DEPARTING FROM SAID POINT TRUE EAST A DISTANCE OF APPROXIMATELY 100.0' TO THE SOUTHEAST CORNER OF SAID LEASE. THENCE: DEPARTING FROM SAID POINT TRUE NORTH A DISTANCE OF APPROXIMATELY 115.0' TO THE NORTHEAST CORNER POINT OF LEASE BEGINING.

THE ABOVE DESCRIBED LEASE AREA CONTAINS 0.2647 ACRES MORE OR LESS

LEGEND

- LEASE BOUNDARY
- CONCRETE SIDEWALK
- OPEN–GRADED GRAVEL

N

0 2' 5' 10' 20'

CAUTION:
NOTE THAT ALL EXISTING UTILITIES MAY NOT BE SHOWN. EXISTING SERVICE CONNECTIONS ARE NOT SHOWN. ANY EXISTING UTILITIES THAT ARE SHOWN ARE SHOWN IN APPROXIMATE LOCATION ONLY. IT SHALL BE THE RESPONSIBILITY OF THE CONTRACTOR TO CONTACT ALL THE UTILITY OWNERS AND TO CONDUCT ALL NECESSARY FIELD INVESTIGATIONS PRIOR TO ANY EXCAVATION TO DETERMINE THE ACTUAL LOCATION OF UTILITIES AND OTHER IMPROVEMENTS.

AS BUILT INFORMATION

CONTRACTOR DATE
WORK STAKED BY DATE
INSPECTOR'S DATE
ACCEPTANCE BY DATE
FIELD VERIFICATION BY DATE
DRAWINGS CORRECTED BY DATE
MICRO–FILM INFORMATION
RECORDED BY DATE
NO.

BENCH MARKS

SURVEY INFORMATION

FIELD NOTES

NO.	BY	DATE

ENGINEER'S SEAL

JOHN M. PROVINE REGISTERED PROFESSIONAL ENGINEER 10997 NEW MEXICO

NO.	DATE	REMARKS	BY

REVISIONS

DESIGN

DESIGNED BY CWG DATE 12/08
DRAWN BY CWG DATE 12/08
CHECKED BY JMP DATE 12/08

TITLE: NMDOT - AVIATION DIVISION OFFICES

UTILITY LAYOUT PLAN

Design Review Committee	City Engineer Approval	Last Design Update	Mo./Day/Yr.	Mo./Day/Yr.

City Project No.	Zone Map No.	Sheet	Of
..	N-15	C-104	

© COPYRIGHT ...

LAST MODIFIED: Jan 23, 2009 - 10:05am BY USER: ggarcia
DWG LOCATION: J:\ALBUQUER\Aviation Open End\AA Model - MDG DWGS\State Aviation Office Site\
DWG NAME: AOA-UTIL.dwg

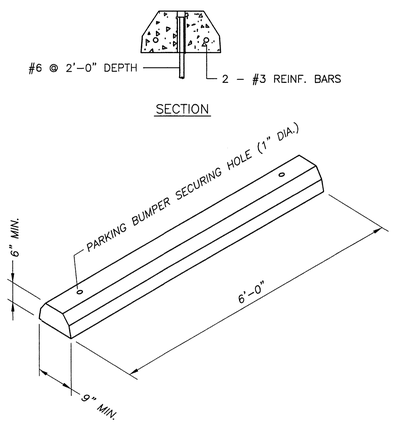

PRECAST CONCRETE WHEEL STOP

SCALE: NONE

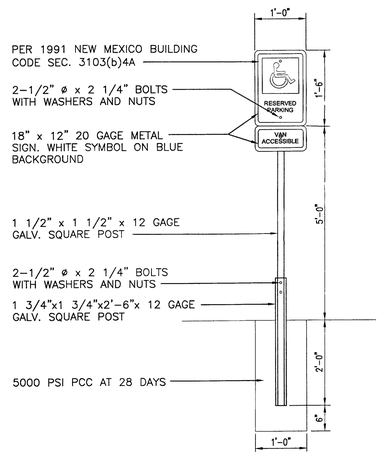

ACCESSIBLE PARKING SIGN

SCALE: NONE

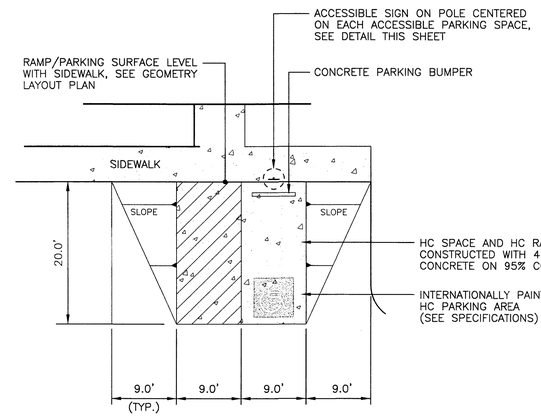

TYPICAL ACCESSIBLE PARKING

SCALE: NONE

AS BUILT INFORMATION

CONTRACTOR
WORK STAKED BY ..... DATE
INSPECTOR'S ACCEPTANCE BY ..... DATE
VERIFICATION BY ..... DATE
DRAWINGS CORRECTED BY ..... DATE

MICRO-FILM INFORMATION

RECORDED BY ..... DATE
NO.

BENCH MARKS

SURVEY INFORMATION

FIELD NOTES

NO.	BY	DATE

ENGINEER'S SEAL

JOHN M. PROVINE
10997
NEW MEXICO
REGISTERED PROFESSIONAL ENGINEER

NO.	DATE	REMARKS	BY

REVISIONS

DESIGN

DESIGNED BY ..... DATE
DRAWN BY ..... DATE
CHECKED BY ..... DATE

TITLE: NMDOT - AVIATION DIVISION OFFICES

MISCELLANEOUS DETAILS

Design Review Committee	City Engineer Approval	Last Design Update	Mo./Day/Yr.	Mo./Day/Yr.

City Project No.	Zone Map No.	Sheet	Of
..	N-15	C-501	

© COPYRIGHT ...

LAST MODIFIED: JUL 23, 2009 - 10:56am BY USER: ggallegos
DWG. NAME: C:\Users\ggallegos\Desktop\Aviation Spec Edits\Aviation Spec Edits - DWGS\State Aviation Office Site\C-501.dwg

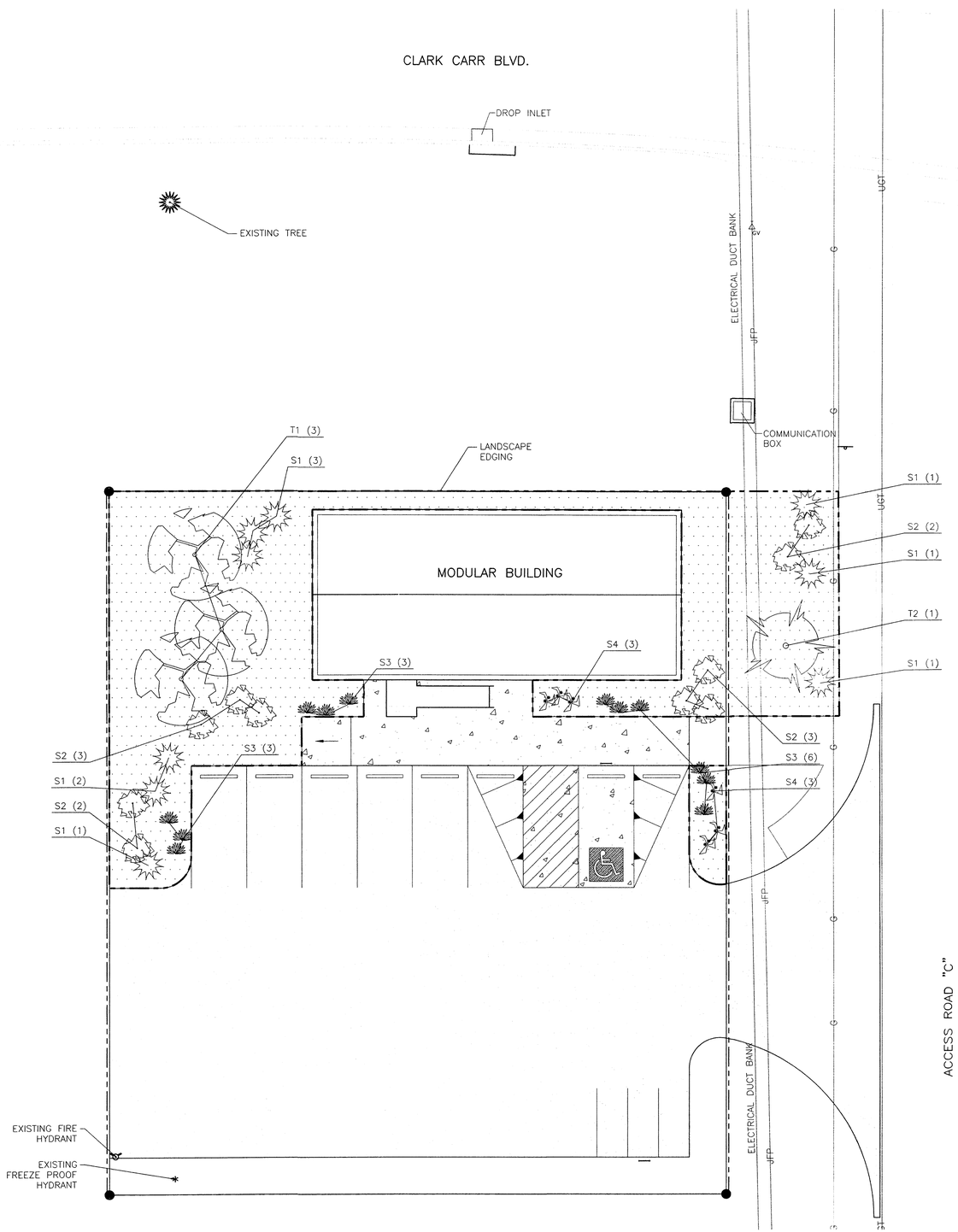

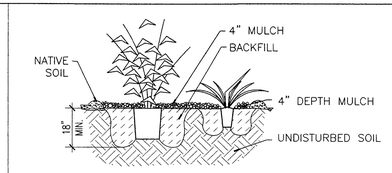

NOTES

A. SHRUB PLANTER SHALL BE BACKFILLED WITH 2 PARTS NATIVE SOIL AND 1 PART ORGANIC MATERIAL.

B. USE EXISTING SOIL TO CONSTRUCT BERM AROUND WATERING BASIN.

C. LOOSEN NATIVE SOIL IN PLANTING BEDS TO A DEPTH OF 18".

PLANTING DETAIL — NO SCALE — 2

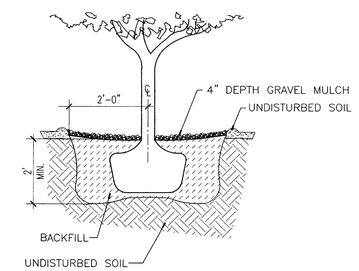

NOTES

A. TREE PLANTERS SHALL BE BACKFILLED WITH 2 PARTS NATIVE SOIL AND 1 PART ORGANIC MATERIAL.

B. USE EXISTING SOIL TO CONSTRUCT BERM AROUND WATERING BASIN.

C. STABILIZE SOIL BELOW ROOTBALL PRIOR TO PLANTING TO PREVENT TREE FROM SETTLING.

D. TOP OF ROOTBALL INDICATES LEVEL AT WHICH TREE WAS GROWN AND DUG: THIS REPRESENTS THE LEVEL AT WHICH THE TREE IS TO BE INSTALLED.

E. PRIOR TO BACKFILLING TREE, ALL WIRE, ROPE, AND SYNTHETIC MATERIAL SHALL BE REMOVED FROM THE TREE AND THE PLANTING PIT.

F. PRIOR TO BACKFILLING, ALL BURLAP SHALL BE CUT AWAY EXCEPT FROM THE BOTTOM OF THE ROOTBALL.

PLANTING DETAIL — NO SCALE — 2

LANDSCAPE NOTES

A. REFER TO DETAILS 1 & 2 FOR SPECIFICATIONS REGARDING PLANTING TREES AND SHRUBS.

B. PLANT GROUPINGS ARE TO BE PLANTED IN CONJOINED WATERING BASINS.

C. CONTRACTOR SHALL STAKE PLANT/IRRIGATION LOCATIONS AND CONTACT LANDSCAPE ARCHITECT FOR APPROVAL BEFORE PLACING PLANT MATERIAL.

D. OWNER WILL BE RESPONSIBLE FOR MAINTENANCE OF PROPERTY AFTER COMPLETION OF PROJECT.

E. THE CONTRACTOR WILL ABIDE BY ALL STATE, LOCAL, & FEDERAL LAWS REGARDING CONSTRUCTION OF THESE IMPROVEMENTS.

F. THE CONTRACTOR IS RESPONSIBLE FOR LOCATING ALL UTILITIES THAT MAY BE ENCOUNTERED DURING CONSTRUCTION THAT REQUIRE RELOCATION. THE CONTRACTOR IS TO COORDINATE ALL UTILITY RELOCATION'S AND OUTAGES WITH THE UTILITY ENTITY PUBLIC OR PRIVATE. NO ADDITIONAL COMPENSATION WILL BE ALLOWED FOR UTILITY ADJUSTMENTS OR DELAYS FOR UTILITY ADJUSTMENTS PERFORMED BY THE CONTRACTOR OR THE CREWS OF THE UTILITY.

G. THE CONTRACTOR IS RESPONSIBLE FOR PROTECTING EXISTING UTILITIES WITHIN THE CONSTRUCTION AREA. ANY DAMAGE TO EXISTING UTILITIES CAUSED BY THESE CONSTRUCTION ACTIVITIES SHALL BE REPAIRED OR REPLACED AT NO ADDITIONAL COSTS TO THE OWNER.

H. THE CONTRACTOR IS RESPONSIBLE FOR DISPOSAL OF ALL EXCESS MATERIAL GENERATED BY THIS PROJECT IN AN APPROVED LOCATION IN CONFORMANCE WITH ALL APPLICABLE LAWS AND REGULATIONS. NO ADDITIONAL COMPENSATION WILL BE ALLOWED FOR DISPOSAL OF MATERIAL.

I. CONSTRUCTION ACTIVITIES ARE LIMITED TO THE SITE AND PROJECT LIMITS. ANY DAMAGE TO ADJACENT PROPERTIES IS THE RESPONSIBILITY OF THE CONTRACTOR.

J. LANDSCAPE CONSTRUCTION ACTIVITIES & VEHICLES SHALL NOT OBSTRUCT OR HINDER CIRCULATION IN PUBLIC RIGHTS-OF-WAY OR PRIVATE DRIVEWAYS.

K. PROPERTY CORNERS AND MARKERS WILL BE MAINTAINED INTACT DURING ALL CONSTRUCTION ACTIVITIES. DAMAGED PROPERTY CORNER MARKERS SHALL BE REPLACED BY A REGISTERED LAND SURVEYOR.

L. RECYCLE/USE EXISTING ASPHALT MILLINGS AS WATER PERMEABLE GROUNDCOVER FOR ENTIRE AREA TO BE LANDSCAPED.

L. 4" DEPTH OF EXISTING MILLINGS REQUIRED AS MULCH IN PLANTING BASINS.

M. NO UNDERGROUND IRRIGATION SYSTEM IS PART OF THIS PROJECT. PLANTINGS WILL BE WATERED BY OWNER WITH ABOVE GROUND HOSE FROM EXISTING, FREEZE PROOF HYDRANTS.

N. INSTALL COMMERCIAL GRADE, MIN. 4" TALL LANDSCAPE EDGING/RESTRAINTS AROUND PERIPHERY OF LANDSCAPED AREA AND ACCORDING TO MANUFACTURER'S RECOMMENDATIONS. SUBMIT MATERIAL INFORMATION TO A/E FOR APPROVAL PRIOR TO INSTALLATION.

LEGEND

- LEASE BOUNDARY
- LANDSCAPE EDGING
- CONCRETE SIDEWALK
- OPEN-GRADED GRAVEL
- ASPHALT MILLINGS GROUNDCOVER

PLANT SCHEDULE

Symbol	Alias	Botanical Name	Common Name	Container	Quantity	Height	Caliper/Diam	Notes
	T1	Chilopsis linearis	Desert Willow	B & B	3	8' to 10'	1"-2"	Trim up to 6' Minimum, see detail 1
	T2	Pinus eldarica	Afghan Pine	B & B	1	8' to 10'	2"-3"	Trim up to 8' Minimum, see detail 1
	S1	Fallugia paradoxa	Apache Plume	1 gallon	9	1' to 2'	-	See detail 2
	S2	Crysothamnus nauseosus 'blue'	Rabbitbrush	1 gallon	10	1' to 2'	-	See detail 2
	S3	Artemesia filifolia	Sand Sage	1 gallon	12	6"-12"	-	See detail 2
	S4	Hesperaloe parviflora	Red Yucca	1 gallon	6	12" min.	-	See detail 2

COA LANDSCAPED AREA REQUIREMENT 15% OF TOTAL DISTURBED AREA

TOTAL DISTURBED AREA = 11,622.6 SQ FT

AREA TO BE LANDSCAPED = 2387.5 SQ FT
21% OF DISTURBED AREA.

LANDSCAPE PLAN COMPLIES WITH WATER CONSERVATION ORDINANCE:
- XERIC (LOW-WATER) PLANTS USED
- MULCH UTILIZED
- NO TURF OR LIVE GROUNDCOVER

N

0 2' 5' 10' 20'

CAUTION:
NOTE THAT ALL EXISTING UTILITIES MAY NOT BE SHOWN. EXISTING SERVICE CONNECTIONS ARE NOT SHOWN. ANY EXISTING UTILITIES THAT ARE SHOWN ARE SHOWN IN APPROXIMATE LOCATION ONLY. IT SHALL BE THE RESPONSIBILITY OF THE CONTRACTOR TO CONTACT ALL THE UTILITY OWNERS AND TO CONDUCT ALL NECESSARY FIELD INVESTIGATIONS PRIOR TO ANY EXCAVATION TO DETERMINE THE ACTUAL LOCATION OF UTILITIES AND OTHER IMPROVEMENTS.

AS BUILT INFORMATION
CONTRACTOR WORK STAKED BY — DATE
INSPECTOR'S ACCEPTANCE BY — DATE
FIELD VERIFICATION BY — DATE
CHANGES CORRECTED BY — DATE
MICRO-FILM INFORMATION
RECORDED BY — DATE
NO.

BENCH MARKS

SURVEY INFORMATION
FIELD NOTES
NO. | BY | DATE

ARCHITECT'S SEAL
STATE OF NEW MEXICO
JOHN QUINN PATE
0087
REGISTERED LANDSCAPE ARCHITECT
12/21/08

REVISIONS
NO. | DATE | REMARKS | BY

DESIGN
DESIGNED BY JAS DATE 12/08
DRAWN BY JAS DATE 12/08
CHECKED BY JOP DATE 12/08

TITLE: NMDOT - AVIATION DIVISION OFFICES

LANDSCAPE PLAN

Design Review Committee	City Engineer Approval	Last Design Update	Mo./Day/Yr.	Mo./Day/Yr.

City Project No.	Zone Map No.	Sheet	Of
..	N-15	L-101	

© COPYRIGHT ...

LAST MODIFIED: JAN 22, 2009 - 10:04am BY: JOHN JPlane
LAYOUT: L-101 (Landscape Plan) XREFS: (N:\CAD\A-Admin Proj\Aviation Office Site\)
DWG NAME: LA8-101.dwg